FENOC

FirstEnergy Nuclear Operating Company

Beaver Valley Power Station
P.O. Box 4
Shippingport, PA 15077-0004

Lew W. Myers
Senior Vice President

724-682-5234
Fax: 724-643-8069

March 28, 2001
L-01-029

U. S. Nuclear Regulatory Commission
Attention: Document Control Desk
Washington, DC 20555-0001

Subject: Beaver Valley Power Station, Unit No. 1
Docket No. 50-334, License No. DPR-66
License Amendment Request No. 293

Pursuant to 10 CFR 50.90, FirstEnergy Nuclear Operating Company requests an amendment to the above license in the form of changes to the technical specifications (TS). The proposed TS change modifies Specification 3.4.8 by reducing the Beaver Valley Power Station (BVPS) Unit 1 Reactor Coolant System (RCS) specific activity limit and Specification 3.7.1.4 by reducing the BVPS Unit 1 Secondary Coolant System specific activity limit. These TS changes will support revised safety analyses with higher primary-to-secondary leakage in accordance with the methodology described in NRC Generic Letter 95-05, "Voltage-Based Repair Criteria for Westinghouse Steam Generator Tubes by Outside Diameter Stress Corrosion Cracking." This change is needed to support BVPS Unit 1 operation through its 15th operating cycle.

The proposed TS changes for BVPS Unit No. 1 are presented in Attachment A. The safety analysis (including the no significant hazards evaluation) is presented in Attachment B. Attachment C provides an evaluation of BVPS Unit 1 release rate data as required by NRC Generic Letter 95-05 for TS changes involving RCS specific activity limits less than 0.35 microcuries per gram. Attachment D provides the BVPS Unit 1 Main Steam Line Break dose calculation.

These changes have been reviewed by the BVPS review committees. The changes were determined to be safe and do not involve a significant hazard consideration as defined in 10 CFR 50.92 based on the attached safety analysis. An implementation period of up to 60 days is requested following the effective date of this amendment.

A001

If you have any questions regarding this matter, please contact Mr. Thomas S. Cosgrove, Manager, Regulatory Affairs at 724-682-5203.

Sincerely,

Lew W. Myers

c: Mr. L. J. Burkhart, Project Manager
Mr. D. M. Kern, Sr. Resident Inspector
Mr. H. J. Miller, NRC Region I Administrator
Mr. D. A. Allard, Director BRP/DEP
Mr. L. E. Ryan (BRP/DEP)

Subject: **Beaver Valley Power Station, Unit No. 1**
BV-1 Docket No. 50-334, License No. DPR-66
License Amendment Request No. 293

I, Lew W. Myers, being duly sworn, state that I am Senior Vice President of FirstEnergy Nuclear Operating Company (FENOC), that I am authorized to sign and file this submittal with the Nuclear Regulatory Commission on behalf of FENOC, and that the statements made and the matters set forth herein pertaining to FENOC are true and correct to the best of my knowledge and belief.

FirstEnergy Nuclear Operating Company

Lew W. Myers
Senior Vice President - FENOC

COMMONWEALTH OF PENNSYLVANIA

COUNTY OF BEAVER

Subscribed and sworn to me, a Notary Public, in and for the County and State above named, this 28 th day of March, 2001.

My Commission Expires:

Notarial Seal
Sheila M. Lattore, Notary Public
Shippingport Boro, Beaver County
My Commission Expires Sept. 30, 2002
Member, Pennsylvania Association of Notaries

ATTACHMENT A

Beaver Valley Power Station, Unit No. 1
License Amendment Request No. 293

The following is a list of the affected pages:

Affected Pages:	XIX
	3/4 4-18
	3/4 4-20
	3/4 4-21
	3/4 7-8
	B 3/4 4-4
	B 3/4 4-5

DPR-66

Figure Index

FIGURE	TITLE	PAGE
2.1-1	Reactor Core Safety Limit - Three Loop Operation	2-2
3.4-1	Dose Equivalent I-131 Primary Coolant Specific Activity Limit Versus Percent of RATED THERMAL POWER with the Primary Coolant Specific Activity > ~~0.20~~ 0.10 µCi/gram Dose Equivalent I-131	3/4 4-21
3.4-2	Beaver Valley Unit 1 Reactor Coolant System Heatup Limitations Applicable for the First 16.0 EFPY	3/4 4-24
3.4-3	Beaver Valley Unit 1 Reactor Coolant System Cooldown Limitations Applicable for the First 16.0 EFPY	3/4 4-25
3.6-1	Maximum Allowable Primary Containment Air Pressure Versus River Water Temperature	3/4 6-7
B 3/4.2-1	Typical Indicated Axial Flux Difference Versus Thermal Power at BOL	B 3/4 2-3
B 3/4.4-1	Fast Neutron Fluence (E>1 Mev) as a Function of Full Power Service Life	B 3/4 4-6a
B 3/4.4-2	Effect of Fluence, Copper Content, and Phosphorus Content on ΔRTNDT for Reactor Vessel Steels per Reg. Guide 1.99	B 3/4 4-6b
B 3/4.4-3	Isolated Loop Pressure-Temperature Limit Curve	B 3/4 4-10a

DPR-66

REACTOR COOLANT SYSTEM

SPECIFIC ACTIVITY

LIMITING CONDITION FOR OPERATION

3.4.8 The specific activity of the primary coolant shall be limited to:

a. ≤ ~~0.20~~ 0.10 μCi/gram DOSE EQUIVALENT I-131, and

b. ≤ 100/$\overline{E}$ μCi/gram.

APPLICABILITY: MODES 1, 2, 3, 4 and 5

ACTION:

MODES 1, 2, and 3*

a. With the specific activity of the primary coolant > ~~0.20~~ 0.10 μCi/gram DOSE EQUIVALENT I-131 for more than 48 hours during one continuous time interval or exceeding the limit line shown on Figure 3.4-1, be in HOT STANDBY with Tavg < 500°F within 6 hours.

b. With the specific activity of the primary coolant > 100/$\overline{E}$ μCi/gram, be in HOT STANDBY with Tavg < 500°F within 6 hours.

MODES 1, 2, 3, 4 and 5

a. With the specific activity of the primary coolant > ~~0.20~~ 0.10 μCi/gram DOSE EQUIVALENT I-131 or > 100/$\overline{E}$ μCi/gram, perform the sampling and analysis requirement of item 4a of Table 4.4-12 until the specific activity of the primary coolant is restored to within its limits.

SURVEILLANCE REQUIREMENTS

4.4.8 The specific activity of the primary coolant shall be determined to be within the limits by performance of the sampling and analysis program of Table 4.4-12.

* With Tavg ≥ 500°F

TABLE 4.4-12

PRIMARY COOLANT SPECIFIC ACTIVITY SAMPLE AND ANALYSIS PROGRAM

TYPE OF MEASUREMENT AND ANALYSIS	MINIMUM FREQUENCY	MODES IN WHICH SURVEILLANCE REQUIRED
1. Gross Activity Determination	3 times per 7 days with a maximum time of 72 hours between samples.	1, 2, 3, 4
2. Isotopic Analysis for DOSE EQUIVALENT I-131 Concentration	1 per 14 days	1,
3. Radiochemical for $\overline{E}$ Determination	1 per 6 months	1,
4. Isotopic Analysis for Iodine Including I-131, I-133, and I-135	a) Once per 4 hours, whenever the specific activity exceeds ~~0.20~~ 0.10 µCi/gram DOSE EQUIVALENT I-131 or 100/$\overline{E}$ µCi/gram, and	1#, 2#, 3#, 4#, 5#
	b) One sample between 2 & 6 hours following a THERMAL POWER change exceeding 15 percent of the RATED THERMAL POWER within a one hour period.	1, 2, 3

#Until the specific activity of the primary coolant system is restored within its limits.

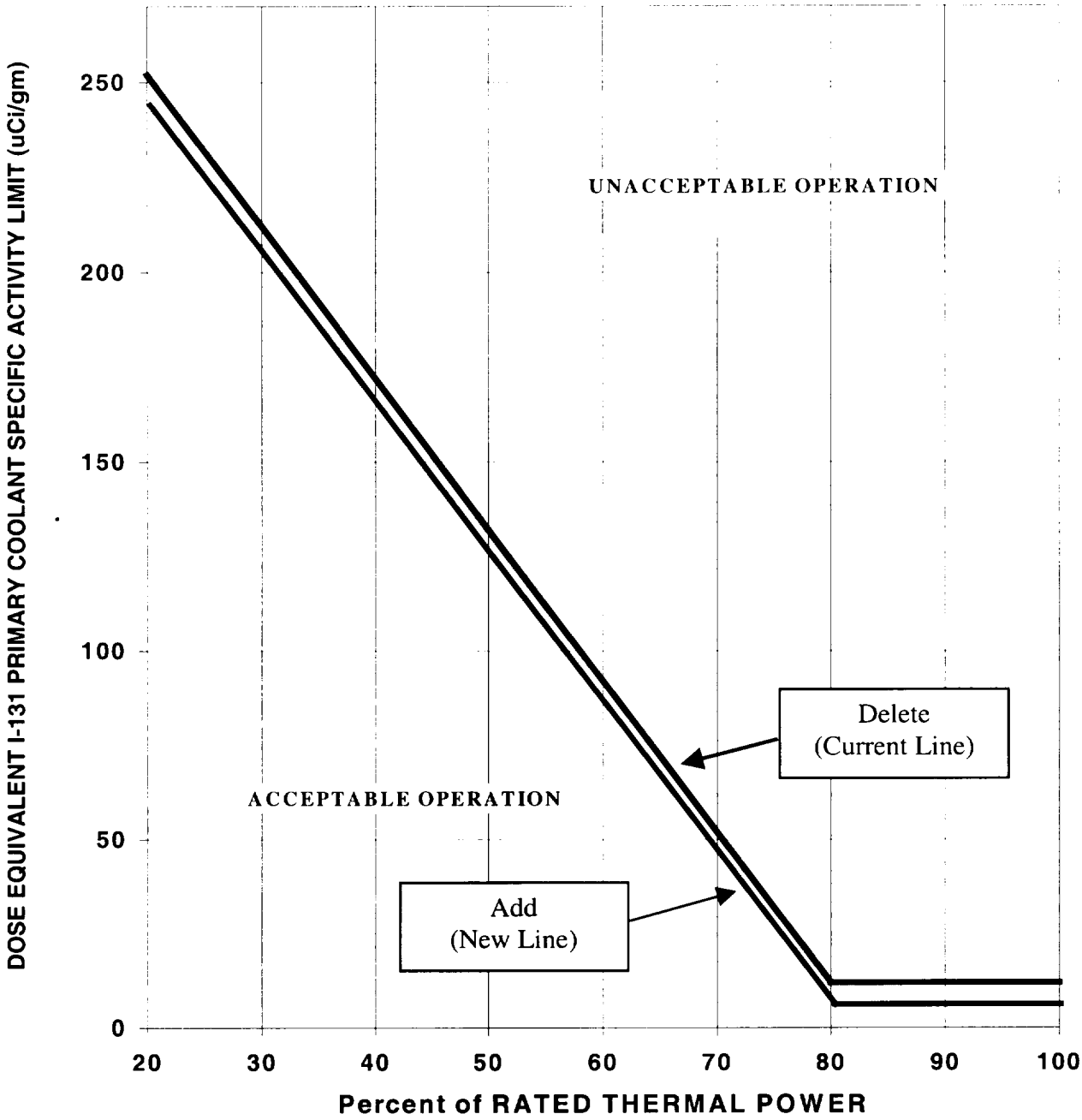

0.10

FIGURE 3.4-1
DOSE EQUIVALENT I-131 Primary Coolant Specific Activity Limit
Versus Percent of RATED THERMAL POWER with the Primary
Coolant Specific Activity > ~~0.20~~ μCi/gram DOSE EQUIVALENT I-131

DPR-66
PLANT SYSTEMS

ACTIVITY

LIMITING CONDITION FOR OPERATION

3.7.1.4 The specific activity of the secondary coolant system shall be ≤ ~~0.10~~ 0.05 µCi/gram DOSE EQUIVALENT I-131.

APPLICABILITY: MODES 1, 2, 3, and 4.

ACTION:

With the specific activity of the secondary coolant system > ~~0.10~~ µCi/gram DOSE EQUIVALENT I-131, be in at least HOT STANDBY within 6 hours and in COLD SHUTDOWN within the next 30 hours.

SURVEILLANCE REQUIREMENTS

4.7.1.4 The specific activity of the secondary coolant system shall be determined to be within the limit by performance of the sampling and analysis program of Table 4.7-2.

3/4.4.7 CHEMISTRY

The limitations on Reactor Coolant System chemistry ensure that corrosion of the Reactor Coolant System is minimized and reduces the potential for Reactor Coolant System leakage or failure due to stress corrosion. Maintaining the chemistry within the Steady State Limits provides adequate corrosion protection to ensure the structural integrity of the Reactor Coolant System over the life of the plant. The associated effects of exceeding the oxygen, chloride and fluoride limits are time and temperature dependent. Corrosion studies show that operation may be continued with contaminant concentration levels in excess of the Steady State Limits, up to the Transient Limits, for the specified limited time intervals without having a significant effect on the structural integrity of the Reactor Coolant System. The time interval permitting continued operation within the restrictions of the Transient Limits provides time for taking corrective actions to restore the contaminant concentrations to within the Steady State Limits.

The surveillance requirements provide adequate assurance that concentrations in excess of the limits will be detected in sufficient time to take corrective action.

3/4.4.8 SPECIFIC ACTIVITY

0.10

The primary coolant specific activity is limited in order to maintain offsite and control room operator doses associated with postulated accidents within applicable requirements. Specifically, the ~~0.20~~ µCi/gm DOSE EQUIVALENT I-131 limit ensures that the offsite dose does not exceed a small fraction of 10 CFR Part 100 guidelines and that control room operator thyroid dose does not exceed GDC-19 in the event of primary-to-secondary leakage induced by a main steam line break.

[Note: The "Acceptable Operation" line is 6 µCi/gram DOSE EQUIVALENT I-131 for 80-100% power.]

3/4.4.8 SPECIFIC ACTIVITY (Continued)

The ACTION statement permitting POWER OPERATION to continue for limited time periods with the primary coolant's specific activity > ~~0.20~~ 0.10 µCi/gram DOSE EQUIVALENT I-131, but within the allowable limit shown on Figure 3.4-1, accommodates possible iodine spiking phenomenon which may occur following changes in THERMAL POWER. Operation with specific activity levels exceeding ~~0.20~~ µCi/gram DOSE EQUIVALENT I-131 for more than 48 hours during one continuous time interval or exceeding the limits shown on Figure 3.4-1 must be restricted to ensure that assumptions made in the UFSAR accident analyses are not exceeded.

Reducing Tavg to < 500°F minimizes the release of activity should a steam generator tube rupture since the saturation pressure of the primary coolant is below the lift pressure of the atmospheric steam relief valves. This action also reduces the pressure differential across the steam generator tubes reducing the probability and magnitude of main steam line break accident induced primary-to-secondary leakage. The surveillance requirements provide adequate assurance that excessive specific activity levels in the primary coolant will be detected in sufficient time to take corrective action. Information obtained on iodine spiking will be used to assess the parameters associated with spiking phenomena. A reduction in frequency of isotopic analyses following power changes may be permissible if justified by the data obtained.

3/4.4.9 PRESSURE/TEMPERATURE LIMITS

All components in the Reactor Coolant System are designed to withstand the effects of cyclic loads due to system temperature and pressure changes. These cyclic loads are introduced by normal load transients, reactor trips, and startup and shutdown operations. The various categories of load cycles used for design purposes are provided in Section 4.1.4 of the FSAR. During startup and shutdown, the rates of temperature and pressure changes are limited so that the maximum specified heatup and cooldown rates are consistent with the design assumptions and satisfy the stress limits for cyclic operation.

During heatup, the thermal gradients in the reactor vessel wall produce thermal stresses which vary from compressive at the inner wall to tensile at the outer wall. These thermal-induced compressive stresses tend to alleviate the tensile stresses induced by the internal pressure. Therefore, a pressure-temperature curve based on steady state conditions (i.e., no thermal stresses) represents a lower bound of all similar curves for finite heatup rates when the inner wall of the vessel is treated as the governing location.

ATTACHMENT B

Beaver Valley Power Station, Unit No. 1
License Amendment Request No. 293
REVISION OF RCS SPECIFIC ACTIVITY VALUE

A. DESCRIPTION OF AMENDMENT REQUEST

This proposed license amendment would reduce the limit for Reactor Coolant System (RCS) specific activity in Beaver Valley Power Station (BVPS) Unit No. 1 Technical Specification 3/4.4.8. The Dose Equivalent I-131 is requested to be lowered from the current value of ≤ 0.20 μCi/gram to a value of ≤ 0.10 μCi/gram as specified in Technical Specification 3.4.8.a (and associated Actions and Table 4.4-12). This change will also lower the 'Acceptable Operation' line on Figure 3.4-1 from 12 μCi/gram to 6 μCi/gram Dose Equivalent I-131 for 80-100% power, and a commensurate reduction for power between 20-80%. The proposed license amendment would also reduce the limit for secondary coolant system specific activity from the current value of 0.10 μCi/gram to a value of 0.05 μCi/gram as specified in Technical Specification 3.7.1.4 (and associated Action).

B. DESIGN BASES

The steam generator tubes act as a barrier between the RCS radioactively contaminated water and the normally non-radioactive secondary system water and steam. The safety function of the steam generator tubes is to prevent or mitigate the release of radioactive fission and activation products from the reactor coolant system to the secondary system, and subsequently to the environment during normal operation or following a design basis accident (DBA). During certain plant transient or accident situations, the secondary system may be vented to the atmosphere to serve as a heat removal path, thereby controlling the temperature of the nuclear fuel. Under these conditions, leakage across the steam generator tubes will result in a release of radioactive fission and activation products to the environment. Technical Specification 3.4.8 limits the specific activity of the primary coolant during normal operation and Technical Specification 3.7.1.4 limits the specific activity of the secondary coolant system during normal operation. These specific activity criteria limit the release of radioactive products for actual or projected steam generator tube leakage.

C. JUSTIFICATION

The current value of 0.20 μCi/gram for primary coolant in Technical Specification 3/4.4.8 was provided in BVPS Unit 1 License Amendment No. 236. The changes in this amendment were made pursuant to NRC Generic Letter (GL) 95-05, Voltage-Based Repair Criteria for Westinghouse Steam Generator Tubes by Outside Diameter Stress Corrosion Cracking.

As discussed in BVPS Unit No. 1 License Amendment Request No. 284 submitted previously on July 21, 2000, other industry generic solutions are being approached to address the impact to the Steam Generator Degradation Specific Management (SGDSM) database as a result of inclusion of French reactor data that resulted in increased Probability of Leakage (POL) due to statistical skewing of the correlation. Although other industry generic solutions are being approached to address this SGDSM database skewing at the lower voltage range, it is requested that the BVPS Unit 1 primary coolant specific activity limit be lowered in order to support BVPS Unit 1 revising its DBA dose analysis pursuant to GL 95-05 in order to offset the recently increased POL and allow continued BVPS Unit 1 operation.

Attachment D provides the Safety Analysis calculation of the common control room, EAB and LPZ doses from a Main Steam Line Break Outside of Containment at BVPS Unit 1. The changes incorporated include 1) a reduced RCS specific activity limit, 2) a reduced secondary system specific activity limit, 3) revised control room charcoal filter efficiency as addressed by NRC Generic Letter 99-02, and 4) elimination of an unnecessary assumption for a twenty minute delay in manually starting the BVPS Unit 1 control room backup ventilation system.

GL 95-05 states that any reduction of RCS specific activity less than 0.35 μCi/gram Dose Equivalent I-131 requires an evaluation of release rate data as described in Nuclear Technology, Vol. 94, p. 361 (1991), J. P. Adams and C. L. Atwood, The Iodine Spike Release Rate During a Steam Generator Tube Rupture. This evaluation was performed for BVPS Unit 1 and is provided in Attachment C. This evaluation shows that BVPS Unit 1 RCS Dose Equivalent I-131 data fully supports lowering the Technical Specification RCS specific activity limit to 0.10 μCi/gram without compromising the Standard Review Plan assumption of a post-event iodine spike factor of 500.

Activity in the secondary system results from steam generator tube outleakage from the RCS, which is controlled by Technical Specification 3.4.6.2.c. The limit

on secondary system specific activity during power operation minimizes releases to the environment because of normal operation, anticipated operational transients and accidents. The BVPS Unit 1 Technical Specification limit for secondary system specific activity has historically been a factor of 10 less than the Technical Specification limit for RCS specific activity. The original BVPS Unit 1 Technical Specifications limited RCS specific activity to 1.0 microcuries/gram and secondary system specific activity to 0.10 microcuries/gram. BVPS Unit 1 Technical Specification Amendment No. 205 reduced the RCS specific activity limit to 0.35 microcuries/gram without any reduction in the secondary system specific activity limit. BVPS Unit 1 Technical Specification Amendment No. 236 reduces the RCS specific activity limit to 0.20 microcuries/gram also without any reduction in secondary system specific activity limit. This License Amendment Request requests a further reduction in RCS specific activity to 0.10 microcuries/gram. Therefore, a reduction in the secondary system specific activity is also being requested, consistent with the overall RCS specific activity limit reduction. The requested reduction in secondary system specific activity limit to 0.05 microcuries/gram would be a factor of 2 less than the requested RCS specific activity limit. The Main Steam Line Break Analysis in Attachment D shows acceptable dose results using the proposed RCS and secondary system specific activity limits, with no proposed change in RCS primary-to-secondary leakage limit in Technical Specification 3.4.6.2.c. Therefore, the proposed reduction in secondary system specific activity would continue to meet the criteria currently listed in BVPS Unit 1 Technical Specification Bases 3/4.7.1.4.

The change in control room ventilation filter efficiency aligned the safety analysis for MSLB with the criteria in NRC Generic Letter (GL) 99-02 and the BVPS Unit 1 response to GL 99-02.

The twenty minute period during which the control room was assumed not to be pressurized is an overly conservative and unnecessary assumption. Failure of a steam line isolation valve is already assumed, and this is the limiting single failure associated with maximizing accident control room dose. The twenty minute delay would only occur upon failure of a safety-related system emergency pressurization fan designed to automatically start and run after the bottled air pressurization system depletes. Failure of this system would require that a back-up system be manually started. The 20 minute delay was for this action. Removing this over-conservative second active failure assumption has a small effect on the results.

D. SAFETY ANALYSIS

This proposed change which lowers the Technical Specification limit for RCS and secondary system Dose Equivalent I-131 is conservative and will not adversely affect the current calculated dose values for BVPS Unit 1 DBAs since a lower RCS and secondary system specific activity will lower the calculated dose from any resultant steam generator tube leakage postulated during the DBA. As shown by the evaluation in Attachment C, the Standard Review Plan assumption for accident-induced steam generator tube leakage spike remains valid. Thus, the dose listed in the BVPS Unit 1 UFSAR from those DBAs which calculate and list a dose value in the BVPS Unit 1 UFSAR will remain bounding values.

The immediate effect upon receiving a revised lower primary coolant and secondary specific activity limit in Technical Specification 3.4.8.a would also result in a lower calculated Main Steam Line Break (MSLB) dose value if incorporated into the MSLB dose calculation without any other modifications. However, the BVPS Unit 1 MSLB analysis is analyzed per GL 95-05 which states that a reduction on RCS iodine activity is an acceptable means for accepting higher projected leakage rates and still meeting the applicable limits of Title 10 of the Code of Federal Regulations Part 100 and General Design Criteria (GDC) 19 utilizing currently accepted licensing basis assumptions. Thus, pursuant to this GL 95-05 methodology, the reduced RCS specific activity limit for Technical Specification 3.4.8.a will be used to allow for a higher projected leakage rate, while still meeting the applicable regulatory dose limits. Attachment D provides the new primary-to-secondary SG leakage limit in the faulted SG based on the reduced RCS specific activity. The new faulted SG leakage limit will be described in the UFSAR and will be used in the SG inspection program to comply with the SG tube repair criteria. The steam generator secondary activity limit is lowered to half of the RCS specific activity limit. This maintains the secondary coolant specific activity limit consistent with the guidelines setting the primary coolant specific activity limit and the current Technical Specification 3.4.6.2.c limit on primary-to-secondary leakage, as described in the BVPS Unit 1 Technical Specification Bases 3/4.7.1.4. Based on these analyses, the control room and offsite doses have been analyzed and shown to comply with the regulatory limits; therefore, these changes do not significantly reduce the margin of safety of the plant.

Thus, the current BVPS Unit 1 MSLB calculated dose value will not decrease with a new lower RCS and secondary system specific activity value in order to allow for

a higher projected leakage rate. However, the BVPS Unit 1 MSLB calculated dose values will remain within the limits specified in 10 CFR 50, Appendix A, GDC 19, and the radiological doses to the public will remain a small fraction of the regulatory limits specified in 10 CFR 100.11, using methodology previously accepted in BVPS Unit 1 License Amendment No. 236.

Thus, this requested license amendment will not adversely affect the current licensing bases.

E. NO SIGNIFICANT HAZARDS EVALUATION

This proposed license amendment would reduce the limit for Reactor Coolant System (RCS) specific activity in Beaver Valley Power Station (BVPS) Unit No. 1 Technical Specification 3/4.4.8. The Dose Equivalent I-131 is requested to be lowered from the current value of ≤ 0.20 μCi/gram to a value of ≤ 0.10 μCi/gram as specified in Technical Specification 3.4.8.a (and associated Actions and Table 4.4-12). This change will also lower the 'Acceptable Operation' line on Figure 3.4-1 from 12 μCi/gram to 6 μCi/gram Dose Equivalent I-131 for 80-100% power, and a commensurate reduction for power between 20-80%. The proposed license amendment would also reduce the limit for secondary coolant system specific activity from the current value of 0.10 μCi/gram to a value of 0.05 μCi/gram as specified in Technical Specification 3.7.1.4 (and associated Action).

The no significant hazard considerations involved with the proposed amendment have been evaluated. The evaluation focused on the three standards set forth in 10 CFR 50.92(c), as quoted below:

> The Commission may make a final determination, pursuant to the procedures in paragraph 50.91, that a proposed amendment to an operating license for a facility licensed under paragraph 50.21(b) or paragraph 50.22 or for a testing facility involves no significant hazards consideration, if operation of the facility in accordance with the proposed amendment would not:
>
> (1) Involve a significant increase in the probability or consequences of an accident previously evaluated; or
>
> (2) Create the possibility of a new or different kind of accident from any accident previously evaluated; or

(3) Involve a significant reduction in a margin of safety.

The following evaluation is provided for the no significant hazards consideration standards.

1. Does the change involve a significant increase in the probability or consequences of an accident previously evaluated?

This proposed change which lowers the Technical Specification limit for RCS and secondary system Dose Equivalent I-131 is conservative and will not adversely affect the current calculated dose values for BVPS Unit 1 Design Basis Accidents (DBAs) since a lower RCS and secondary system specific activity will lower the calculated dose from any resultant steam generator tube leakage postulated during the DBA. The Standard Review Plan assumption for accident-induced steam generator tube leakage spike remains valid. Thus, the dose listed in the BVPS Unit 1 Updated Final Safety Analysis Report (UFSAR) from those DBAs which calculate and list a dose value in the BVPS Unit 1 UFSAR will remain bounding values.

The immediate effect upon receiving a revised lower primary coolant and secondary system specific activity limit in Technical Specification 3.4.8.a would also result in a lower calculated Main Steam Line Break (MSLB) dose value, if incorporated into the MSLB dose calculation without any other modifications. However, the BVPS Unit 1 MSLB analysis is analyzed per Generic Letter (GL) 95-05 which states that a reduction in RCS iodine activity is an acceptable means for accepting higher projected leakage rates and still meeting the applicable limits of Title 10 of the Code of Federal Regulations Part 100 and General Design Criteria (GDC) 19 utilizing currently accepted licensing basis assumptions. Thus, pursuant to this GL 95-05 methodology, the reduced RCS specific activity limit for Technical Specification 3.4.8.a will be used to allow for higher projected leakage rates, while still meeting the applicable regulatory dose limits. An evaluation was performed for the new primary-to-secondary SG leakage limit in the faulted SG based on the reduced RCS specific activity. The new faulted SG leakage limit will be described in the UFSAR and will be used in the SG inspection program to comply with the SG tube repair criteria. The steam generator secondary activity limit is lowered to half of the RCS specific activity limit. This maintains the secondary coolant specific activity limit less than the primary coolant specific activity limit consistent with the

MSLB calculation's analytical assumptions. Based on these analyses, the control room and offsite doses have been analyzed and shown to comply with the regulatory limits; therefore, these changes do not significantly reduce the margin of safety of the plant.

Thus, the current BVPS Unit 1 MSLB calculated dose value will not decrease with a new lower RCS and secondary system specific activity value in order to allow for higher projected leakage rates. However, the BVPS Unit 1 MSLB calculated dose values will remain within the limits specified in 10 CFR 50, Appendix A, GDC 19, and the radiological doses to the public will remain a small fraction of the regulatory limits specified in 10 CFR 100.11, using methodology previously accepted in BVPS Unit 1 License Amendment No. 236.

Therefore, this change will not increase the probability of occurrence of a postulated accident or will not significantly increase the consequences of an accident previously evaluated since the change would continue to comply with the current BVPS Unit 1 licensing basis as it relates to the dose limits of GDC 19 and 10 CFR Part 100.

2. Does the change create the possibility of a new or different kind of accident from any accident previously evaluated?

The proposed license amendment to the primary coolant and secondary system specific activity limit does not change the way the RCS is operated. The proposed changes only involve changes to the primary coolant and secondary system specific activity limit where continued power may occur. This reduced limit is conservative and does not alter the RCS or steam generators' ability to perform their design bases.

GL 95-05 states that any reduction of RCS specific activity less than 0.35 μCi/gram Dose Equivalent I-131 requires an evaluation of release rate data as described in Nuclear Technology, Vol. 94, p. 361 (1991), J. P. Adams and C. L. Atwood, The Iodine Spike Release Rate During a Steam Generator Tube Rupture. This evaluation was performed for BVPS Unit 1 and shows that BVPS Unit 1 RCS Dose Equivalent I-131 data fully supports lowering the Technical Specification RCS specific activity limit to 0.10 μCi/gram without compromising the Standard Review Plan assumption of a post-event iodine spike factor of 500.

Therefore, these proposed changes do not create the possibility of a new or different kind of accident from any previously evaluated accident since the RCS and steam generator will continue to operate in accordance with their design bases.

3. Does the change involve a significant reduction in a margin of safety?

The proposed amendment does not involve revisions to any safety limits or safety system setting that would adversely impact plant safety. The proposed amendment does not adversely affect the ability of systems, structures or components important to the mitigation and control of design bases accident conditions within the facility. In addition, the proposed amendment does not affect the ability of safety systems to ensure that the facility can be maintained in a shutdown or refueling condition for extended periods of time.

The proposed license amendment to the primary coolant and secondary system specific activity limit does not adversely change the way the RCS or steam generators are operated. This modification does not alter these systems' ability to perform their design bases. The existing safety analyses remain bounding. Therefore, the margin of safety is not significantly reduced.

F. NO SIGNIFICANT HAZARDS CONSIDERATION DETERMINATION

Based on the considerations expressed above, it is concluded that the activities associated with this license amendment request satisfy the requirements of 10 CFR 50.92(c) and, accordingly, a no significant hazards consideration finding is justified.

G. ENVIRONMENTAL CONSIDERATION

This license amendment request changes a requirement with respect to the installation or use of a facility component located within the restricted area as defined in 10 CFR Part 20. It has been determined that this license amendment request involves no significant increase in the amounts, and no significant change in the types of any effluents that may be released offsite, and that there is no significant increase in individual or cumulative occupational radiation exposure. This license amendment request may change requirements with respect to installation or use of a facility component located within the restricted area or

change an inspection or surveillance requirement; however, the category of this licensing action does not individually or cumulatively have a significant effect on the human environment. Accordingly, this license amendment request meets the eligibility criteria for categorical exclusion set forth in 10 CFR 51.22(c)(9). Pursuant to 10 CFR 51.22(b) no environmental impact statement or environmental assessment need be prepared in connection with the issuance of this license amendment request.

ATTACHMENT C

Beaver Valley Power Station, Unit No. 1
License Amendment Request No. 293

Evaluation of BVPS Unit 1 Release Rate Data

Evaluation of BVPS Unit 1 Release Rate Data

BVPS has investigated the history of iodine spiking at Unit 1 in support of the effort to lower the Dose Equivalent I-131 Technical Specification 3/4.4.8 limit for the Reactor Coolant System (RCS) to 0.10 microcuries per gram. This analysis was performed pursuant to NRC Generic Letter (GL) 95-05, Section 2.b.4, for plants reducing their Dose Equivalent I-131 limit to justify the iodine spiking assumptions used in accordance with the Standard Review Plan.

GL 95-05 requires that the spiking analysis be performed using the methodology described in *The Iodine Spike Release Rate during a Steam Generator Tube Rupture*, J. P. Adams and C. L. Atwood, Nuclear Technology, Volume 94, page 361 (1991).

BVPS Unit 1 RCS iodine values were reviewed, starting with Cycle 5 data in 1985, and concluding with Cycle 13 data in the year 2000 (Cycle 5 was selected as the starting point since there is no fuel failure data prior to Cycle 5, and the iodine data prior to 1985 frequently lacks all of the data requirements listed in Adams and Atwood). Over 1600 RCS iodine analyses were reviewed; 58 of these were directly related to plant trips. Of the 58 trips reviewed, only 29 met all of the data requirements of Adam and Atwood:

1. Sufficient steady-state power prior to the plant trip to ensure an adequate buildup of iodine. The specific criterion used was a minimum of 5 days at steady-state power operation, resulting in a minimum of 35% of the steady state I-131 concentration. In nearly all cases, the steady-state power operation lasted several weeks to several months rather than the minimum of 5 days.

2. Knowledge of the steady-state iodine concentration.

3. Availability of at least one post trip chemistry sample taken 2 to 6 hours after the plant trip.

4. No post trip RCS perturbation (e.g., recriticality) prior to the RCS sample.

5. Availability of all requisite transient information (purification flow, plant trip date and time, post trip sample date and time).

Additionally, the purification flow rate had to be constant before and after the transient, as was stated in Adams and Atwood, Section II.C.

The 29 plant trips that met all of the data requirements of Adams and Atwood were then subject to analysis as described in their paper. The results are listed in Table 1. All values are well within the bounds of the data set listed in Adams and Atwood. One cycle (Cycle 7) operated defect free; the other cycles had defects ranging from one failed rod to 35 failed rods. In all cases, the release rate spike factor was below the Standard Review Plan assumed value of 500.

The maximum normalized release rate was calculated to be 7.463E-2 Ci/hr*Mwe. This release rate is far below the 95% confidence bound on the 90th percentile, given by Adams and Atwood as 1.09 Ci/hr*Mwe.

Therefore, using the methodology referenced by GL 95-05, the RCS Dose Equivalent I-131 data fully supports lowering the RCS Dose Equivalent I-131 Technical Specification limit to 0.10 microcuries per gram without compromising the Standard Review Plan assumption of a post-event iodine spike factor of 500.

It is noted that the BVPS Unit 1 RCS Dose Equivalent I-131 data is below most industry values because the BVPS Unit 1 fuel failure mechanisms (primarily grid-to-rod fretting) have placed most of the BVPS Unit 1 fuel failures in the peripheral regions of the core. The power factors in these peripheral regions are very low due to the BVPS Unit 1 use of low-leakage core designs. Therefore, although BVPS Unit 1 has had a number of fuel failures, they have occurred in rods where there was relatively little generation of fission products.

Table 1
Evaluation of BVPS Unit 1 Iodine Release Rate Data

Sample Date & Time	Power	I-131	DEI-131	R3(2)	R3(2)/P
	(%)			(Ci/hr)	(Ci/hr*Mwe)
Sunday 02/10/85 1415	100.0	1.118E-03	2.987E-03		
Wednesday 02/20/85 0836	0.0	4.002E-04	2.259E-03	3.574E-02	4.195E-05
Thursday 04/18/85 1915	97.8	9.899E-04	2.758E-03		
Friday 04/26/85 2127	0.0	5.402E-04	2.098E-03	8.788E-02	1.055E-04
Monday 09/09/85 1740	98.0	1.570E-03	6.447E-03		
Monday 09/16/85 1238	0.0	3.581E-03	9.193E-03	9.644E-01	1.155E-03
Friday 05/09/86 1800	84.7	5.962E-03	2.049E-02		
Saturday 05/17/86 0315	0.0	2.488E-02	3.635E-02	7.079E+00	9.809E-03
End Cycle 5					
Sunday 01/11/87 1955	98.8	3.472E-03	6.812E-03		
Monday 01/12/87 0346	0.0	2.080E-02	2.447E-02	6.033E+00	7.167E-03
Sunday 02/01/87 1925	100.0	1.950E-03	5.229E-03		
Sunday 02/08/87 1200	0.0	3.828E-02	4.276E-02	1.144E+01	1.343E-02
Sunday 04/19/87 1633	99.5	1.606E-03	4.956E-03		
Saturday 04/25/87 0150	0.0	5.863E-02	7.000E-02	1.763E+01	2.080E-02
End Cycle 6					
Sunday 06/05/88 1738	99.7	1.983E-03	3.602E-03		
Saturday 06/11/88 1310	0.0	3.856E-03	4.054E-03	1.016E+00	1.196E-03
Tuesday 05/16/89 1755	89.0	1.139E-03	3.060E-03		
Thursday 05/18/89 0437	0.0	1.071E-02	1.644E-02	3.156E+00	4.162E-03
End Cycle 7					
Tuesday 01/16/90 1847	100.0	2.134E-04	1.003E-03		
Friday 01/19/90 2045	0.0	1.494E-04	6.035E-04	2.892E-02	3.395E-05
Sunday 03/25/90 1731	99.4	1.885E-04	9.169E-04		
Friday 03/30/90 1800	0.0	1.656E-04	6.252E-04	3.573E-02	4.219E-05
Sunday 07/08/90 1650	100.0	7.359E-04	1.814E-03		
Saturday 07/14/90 0200	0.0	9.461E-03	1.091E-02	2.809E+00	3.297E-03
Friday 10/05/90 1757	99.0	7.417E-04	1.696E-03		
Saturday 10/06/90 0635	0.0	6.724E-02	7.983E-02	2.028E+01	2.404E-02
Thursday 12/20/90 1625	98.5	1.189E-03	2.341E-03		
Wednesday 12/26/90 1425	0.0	2.580E-02	2.764E-02	7.722E+00	9.202E-03
End Cycle 8					

Table 1
Evaluation of BVPS Unit 1 Iodine Release Rate Data
(Continued)

Sample Date & Time	Power	I-131	DEI-131	R3(2)	R3(2)/P
	(%)			(Ci/hr)	(Ci/hr*Mwe)
Tuesday 09/17/91 1140	100.0	1.234E-04	5.845E-04		
Wednesday 09/18/91 0745	0.0	3.050E-04	8.115E-04	8.293E-02	9.733E-05
Thursday 10/17/91 1050	100.0	1.466E-04	6.130E-04		
Tuesday 10/22/91 0855	0.0	2.669E-04	6.430E-04	6.962E-02	8.171E-05
Thursday 10/08/92 0905	90.0	4.140E-04	1.276E-03		
Friday 10/09/92 1930	0.0	1.283E-02	1.783E-02	3.854E+00	5.026E-03
End Cycle 9					
Tuesday 10/12/93 0930	99.6	3.303E-04	1.095E-03		
Tuesday 10/12/93 1818	0.0	5.711E-02	6.701E-02	1.727E+01	2.035E-02
Thursday 05/05/94 0825	100.0	7.571E-04	2.145E-03		
Saturday 05/07/94 1100	0.0	1.682E-01	1.969E-01	5.088E+01	5.972E-02
Tuesday 07/19/94 0945	100.0	8.411E-04	2.994E-03		
Tuesday 07/19/94 1935	0.0	2.862E-02	4.167E-02	8.603E+00	1.010E-02
End Cycle 10					
Thursday 08/17/95 0850	99.7	1.005E-03	3.288E-03		
Saturday 08/19/95 0320	0.0	6.157E-02	7.705E-02	1.855E+01	2.183E-02
Thursday 12/14/95 0757	100.0	1.523E-03	4.624E-03		
Tuesday 12/19/95 0100	0.0	7.817E-02	9.539E-02	2.356E+01	2.765E-02
End Cycle 11					
Thursday 05/30/96 0946	99.8	3.503E-04	1.601E-03		
Saturday 06/01/96 0115	0.0	3.735E-03	5.674E-03	1.104E+00	1.299E-03
Thursday 08/01/96 0925	100.0	4.642E-04	1.873E-03		
Monday 08/05/96 0853	0.0	6.474E-04	1.661E-03	1.606E-01	1.884E-04
Wednesday 03/12/97 1031	99.5	5.709E-04	2.466E-03		
Wednesday 03/19/97 0855	0.0	4.155E-02	5.299E-02	1.254E+01	1.479E-02
End Cycle 12					

Table 1
Evaluation of BVPS Unit 1 Iodine Release Rate Data
(Continued)

Sample Date & Time	Power	I-131	DEI-131	R3(2)	R3(2)/P
	(%)			(Ci/hr)	(Ci/hr*Mwe)
Thursday 01/21/99 0912	100.0	3.839E-04	1.635E-03		
Saturday 01/23/99 1338	0.0	1.699E-03	2.926E-03	4.852E-01	5.694E-04
Thursday 04/08/99 1035	100.0	4.021E-04	1.676E-03		
Tuesday 04/13/99 0545	0.0	1.027E-03	1.450E-03	2.612E-01	3.066E-04
Thursday 09/02/99 0942	100.0	6.608E-04	2.439E-03		
Monday 09/06/99 1956	0.0	3.083E-02	3.993E-02	9.286E+00	1.090E-02
End Cycle 13					
Thu Jun 22,2000 0910	100.0	1.238E-04	6.126E-04		
Wed Jul 05,2000 1620	0.0	1.052E-04	4.082E-04	2.239E-02	2.628E-05
Cycle 14 ongoing					
Note: All values of R3(2)/P are <1.09; therefore BVPS Unit #1 values are still conservative.					

ATTACHMENT D

Beaver Valley Power Station, Unit No. 1
License Amendment Request No. 293

Safety Analysis of the Control Room, EAB and LPZ Doses from a Main Steam Line Break Outside of Containment at BVPS Unit 1 with Increased Primary-to-Secondary Leakage

BEAVER VALLEY POWER STATION

RTL: A9.621A
Form: RE 1.103-1
2/93

Health Physics Department

Subject: Safety Analysis of the Common Control Room EAB and LPZ Doses from a Main Steam Line Break Outside of CNMT at U1 with Increased Primary-to-Secondary Leakage	ERS-SFL-95-008	REVISION [redacted] 7 PAGE 1 OF ~~76~~ 100 ~~477~~

Reference
HPM RP/RIP_____ EPP_____ T/S 3/4.4.5 EM_____ DCP_

Review Category
☑ RSC Required ☐ RSC Not Required ☐ 10 CFR 50.59 Required

Unit 1 ☑ Unit 2 ☐

Purpose:
This calculation package documents an analysis of the postulated dose in the common CR, at the EAB and at the LPZ, following a MSLB outside CNMT at Unit 1, with the objective of determining the maximum allowable primary-to-secondary leakage in the faulted steam generator. This analysis performed in support of a license amendment request for alternate tube plugging criteria (APC).

NOTE: This calculation package documents the evaluation described above. This package DOES NOT, in itself, provide authority for any revision in a structure, system, or component; nor changes in procedures, tests and experiments described in the plant licensing basis. The data and/or conclusions of this package shall not be extended to other purposes without explicit concurrence from Radiological Engineering.

	by / chk / app — date	
7	by [signature] 1-25-01 date chk [signature] 1/25/01 date app for the RSC (03-01) [signature] 1/25/01 date	Reduced assumed RCS activity to 0.10 µCi/g (48 hour) and 6 µCi/g (instantaneous) and secondary system liquid activity concentration limit from 0.1 to 0.05 µCi/g dose equivalent I-131. USNRC GL 99-02 methodology for organic iodine removal efficiency of control room charcoal filters (from 0.95 to 0.98%). Removed 20 minute period during which the control room was assumed not pressurized. Primary-to-secondary leakage rate in the faulted steam generator of 14.5 gpm accident induced. Added Appendix 2 - reduced letdown flow and increased accident induced leak rate.
6	by [signature] 5-15-00 date chk [signature] 5/18/00 date app RSC 08-00 [signature] 6/2/00 date	Changed assumed RCS activity limit from 0.35 to 0.20 µCi/g dose equivalent iodine 131; revised the maximum accident-induced leak rate from 3.0 to 5.5 gpm; removed sensitivity and plume and filter shine analyses; eliminated double-counting of T.S. primary-to-secondary leakage and of the T.S RCS activity contribution to the pre-accident spike concentration.
5	by [signature] 3112 5/15/99 date chk [signature] 5-21-99 date app for RSC-09-99 [signature] 6-3-99 date	Revised to include ORIGEN based source terms, revised RCS & S/G masses, revised CR ventilation parameters, revised concentration & line spike appearance rates calculation and the addition of plume & filter back shine dose.
	by See previous cover sheet for chk revisions 0 - 4 signatures app date	Checklist: ☒ Purpose ☒ Assumptions ☒ Methodology ☒ Input Data ☒ Results ☒ References Attachments: ☐ Data Sheets ☑ Illustrations ☑ Printouts ☐ Code Listings

☑ BV RECORDS CENTER
☑ CALCULATION FILE
☐ MGR, Health Physics
☑ DIR, Rad Eng & Health
☐ DIR, Rad Ops-1
☐ DIR, Rad Ops-2
☐ DIR, Safety & Env Svcs
☐ Training Dept.

☑ Author: John T. Lebda
~~Andrew J. Lombardo~~ 5/25/00
☑ GA Kammerdeiner
~~☑ RN Ireland~~ 5/25/00 R. Fedin BV-A

DISCUSSION

General

This calculation determines control room operator, exclusion area boundary (EAB) and low population zone (LPZ) radiation doses following a main steam line break design basis accident (MSLB DBA) at BVPS Unit 1. Doses for the whole body (effective dose equivalent – EDE), the thyroid (committed dose equivalent – CDE) and the skin (skin dose equivalent – SDE) are calculated. The plant parameters and assumptions used herein are consistent with the plant design basis, and they provide results that define the upper bound of the accident dose consequences. As a design basis calculation, this is not intended to show what the expected doses would be, but rather what they might be if the plant is operated at "worst case" limits (operating at the NRC License limits) and using "worst case" accident conditions. The combination of circumstances that would result in the associated maximum dose is unlikely to occur.

This revision of the MSLB radiological analysis was prompted by a potential need to increase the allowable accident induced primary-to-secondary leak rate for Cycle 15 operation. Condition Report Corrective Action 00-1343-05 requested that the analysis be performed with reduced primary and secondary system liquid activity concentrations, increased control room filter efficiency for iodine removal and removal of an assumed delay to manually start a control emergency pressurization fan. These changes are further detailed later in this calculation. All other parameters, assumptions and methodologies used in this revision remain unchanged from the previous revision.

Main Steam Line Break Accident

This DBA is described in the Unit 1 UFSAR[1] and NUREG 0800 Chapter 15, Section 15.1.5[2]. Additionally, because BVPS Unit 1 has implemented steam generator alternative repair criteria (ARC), NRC Generic Letter 95-05[3] also influences the accident scenario.

The MSLB accident begins with a rupture of one of the three main steam lines that carry steam from the steam generators to the turbine. The break location is assumed to be in the turbine building, because using this as the release point will result in the lowest amount of atmospheric dispersion as the plume travels to the control room ventilation system intake. Because of the relatively longer distances, offsite doses are not influenced by the release location. Consequently, the bounding break location is strongly influenced by release point atmospheric dispersion factor with respect to the control room ventilation system intake. Normally, any steam release in the turbine building would be prevented by closure of the main steam line isolation valve, located in the main steam valve room just outside of the reactor containment building. However, there is only one isolation valve per line and this is assumed to remain open as the single active component failure for this accident.

The line break discussed above represents the most significant radioactivity release pathway. The liquid contents of the associated steam generator will flash to steam, releasing all of the radioactive iodine and noble gas contained therein. Additionally, an assumed existing primary to secondary leak (at the Technical Specification[4] limit allowable leakage rate) plus additional leakage induced by the accident transient, will continually release radioactivity via the break until the primary system pressure has been reduced to atmospheric pressure.

Another analyzed release pathway of much less radiological significance is the steam release via the two intact steam generators. Because AC power is assumed to be unavailable, the condenser steam dump valves will remain closed. Because of this, plant heat must be removed by releasing steam through the main steam safety or atmospheric steam dump valves. This release will continue until the RCS has been cooled to the point where the residual heat removal system (RHRS) can be placed in service. Upon the steam line break and reactor trip, the steam valves

will open. This is assumed to cause an immediate release of the steam generators steam content and the radioactivity contained therein. Until the RHRS is placed in service, the steam release will continue, releasing a portion of the radioactive iodine that was initially contained in the steam generator liquid, and radioactive noble gas and iodine released into the generators due to assumed, existing primary to secondary leaks (at the Technical Specification[4] limit allowable leakage rate). Because of the possibility that the water level in the steam generators may drop below the level of the tubes for a brief period, all of the iodine contained in the primary system leakage is assumed to flash with the steam and is released without any credit for retention in the steam generator liquid (partitioning factor of 1.0) until the water level can be restored.

The radiological source term for the MSLB accident consists of the noble gas and iodine contained in the RCS and in the steam generators, both assumed to be at the Technical Specification[5,6] concentration limits. (Note that the values used in this analysis are lower that those listed in the current Technical Specifications. These must be changed for the results of this calculation to be valid.) While no fuel failure is postulated to occur due to the transient, two different scenarios are analyzed which consist of additional iodine being released into the RCS (iodine spike) from existing fuel defects. First an analysis is performed assuming that a spike event has occurred prior to the MSLB. This pre-accident spike raises the RCS activity to the instantaneous limit of 6 μCi/g (proposed in this revision), at which time the accident occurs. The second scenario assumes the release of iodine from the fuel as a consequence of the transient. This co-incident iodine spike results in a release of iodine into the RCS at a rate assumed to be 500 times that which would maintain the RCS concentration at the 48 hour limit of 0.10 μCi/g (proposed in this revision).

Calculation History

As part of the Unit 2 Licensing effort, SWEC performed calculations of the potential control room doses from DBAs at Unit 2[7,8] and at Unit 1[9,10]. These calculations became part of the licensing basis for BVPS-1 and 2 and have been documented in the UFSARs[1,11].

In 1994, Westinghouse performed analyses[12] to support the interim use of steam generator tube plugging limits based on voltage indications. These analyses included re-analysis of the offsite consequences of a postulated main steam line break during which a degraded tube leaks at rates higher than technical specification limits. Based on these analyses, Westinghouse postulated that a 6.6 gpm leakage could be tolerated and not exceed EAB thyroid dose of 30 rem. Based on correlation analyses it was determined that the potential 95% / 95% leakage rate associated with a 2.0 volt indication was much lower than 6.6 gpm providing reasonable margin of safety. In the licensing action, the NRC authorized use of a 1 volt criterion[13] for cycle 11. While offsite doses were evaluated in the Westinghouse report, control room doses were not.

In August 1995, the NRC issued Generic Letter 95-05[3], Voltage-Based Repair Criteria for Westinghouse Steam Generator Tubes Affected by Outside Diameter Stress Corrosion Cracking. The generic letter specified that the accident leak rate acceptability needed to assess the offsite <u>and</u> control room doses. License amendment requests for these alternate plugging criteria must meet the guidance of the generic letter. Revision 0 (October 1995) analyzed the postulated control room doses at the projected accident leakage rate in support of a license amendment request for cycle 12 and beyond. Since then the calculation has been revised as follows:

Revision 1 (December 1996) - The source term was calculated based on DE-I-131 values of 0.5 and 0.35 uCi/gm (1.0 uCi/gm in Rev. 0). New short term X/Q values calculated in ERS-SFL-96-021[14] were used. The EAB and LPZ doses were calculated. The DE-I-131 used in Revision 0 was based on the dose conversion factors of TID1484421[15]. Revision 1 uses isotopic concentrations developed using the ICRP 26/30 based, EPA Federal Guidance Report No. 11[16] dose conversion factors.

Revision 2 (February 1997) - Corrected typo on LPZ table.

Revision 3 (January 1998) - Revised control room ventilation parameters, and RCS and steam generator mass values. Appendices added to address concurrent iodine spiking, and RCS and steam generator mass values, respectively.

Revision 4 (March 1998) - Revised RCS density value used. A sensitivity analysis of the effect of RCS and steam generator water and steam mass was completed and included.

Revision 5 (June 1999) was performed in response to Condition Report 972390[17] (Corrective Action 972390-2). The requirement for verification of parameters and assumptions imposed by this condition report resulted in substantial changes to this calculation. New source terms were calculated based on revised calculations of core inventory and 1% failed fuel concentrations performed by SWEC[18,19]. The calculation of concurrent iodine spike appearance rates was revised. Specifically the radioactivity transfer rate constant used in the calculation was revised to include the total RCS Technical Specification leakage (identified + unidentified + primary to secondary leakage), max letdown (purification) flow rate, and max purification efficiency. This revision completely supercedes the previous revision. In addition, the control room dose from control room filter shine and plume shine were calculated.

Revision 6 (May 2000) was performed to evaluate the doses resulting from a Main Steam Line Break (MSLB) event assuming that the RCS activity concentration limits are reduced to 0.20 μCi/g (48 hour) and dose equivalent I-131. Associated with this is a revised, commensurately higher assumed primary-to-secondary leakage rate in the faulted steam generator. This is in keeping with the purpose of the analysis, that is, to use the highest leakage rate while maintaining doses within all applicable limits. Two slight over-conservatisms are removed: 1) allowable steam generator primary-to-secondary leakage was previously double counted in the concurrent iodine spike calculation, and 2) the maximum transient RCS activity concentration had the 48 hour maximum concentration added to it for the dose calculations. These changes in assumptions have a very small affect on the results. The sensitivity analyses are removed from the calculation package. These are still performed and maintained on file; however, only the bounding case is documented herein. Because the plume and filter shine dose for the control room operator are not included as part of the current design basis assumptions, and the dose contribution from these sources is small, this part of the calculation (added in the last revision) is not carried forward in this revision.

This calculation (**Revision 7**) is performed to evaluate the doses resulting from a Main Steam Line Break (MSLB) event assuming that the RCS activity concentration limits are reduced to 0.10 μCi/g (48 hour) and 6 μCi/g (instantaneous) dose equivalent I-131. The previous revision of this analysis assumed these values to be 0.20 μCi/g and 12 μCi/g, respectively. Reduced assumed secondary system liquid dose equivalent iodine 131 specific activity from 0.1 to 0.05μCi/g. Additionally, this revision implements the methodology of USNRC Generic Letter 99-02[50] for determining the organic iodine removal efficiency of charcoal filters. Actions to implement this Generic Letter at Beaver Valley Unit 1 were previously initiated[51]. In addition, the methodology is used in a proposed revision to Regulatory Guide 1.52[52]. This increases the assumed removal efficiency from 0.95 to 0.98. The final change is removal of a 20 minute period during which the control room was assumed not to be pressurized, an overly-conservative and unnecessary assumption. Failure of a steam line isolation valve is already assumed, and this is the limiting single failure associated with maximizing accident control room dose. The 20 minute delay would only occur upon failure of a safety-related system emergency pressurization fan designed to automatically start and run after the bottled air pressurization system depletes. Failure of this system would require that a back-up system be manually started. The 20 minute delay was for this action. Removing this over-conservative assumption has a small affect on the results. Associated with all of the changes described above, is a revised commensurately higher assumed primary-to-secondary leakage rate in the faulted steam generator. This is in keeping with the purpose of the analysis, that is, to use the highest leakage rate while maintaining doses within all applicable limits.

METHODOLOGY

Overall Methodology

The analyses in this revision use version 1.0a of the TRAILS_PC (for Transport of Radioactive mAterial In Linear Systems), PC version documented in ERS-SFL-96-004[20]. This version is the same as that used in the revisions 1 - 4 analyses with the exception that the 1.0a version calculates the control room, EAB and LPZ doses in a single computer run. This analysis contains no methodologies that have not been previously used in BVPS Unit 1 DBA analyses and reviewed by the NRC. Although use of the Generic Letter 99-02[50] iodine filtration efficiency determination is a methodology new to this calculation, commitment to this document occurred[51] prior to this calculation revision.

Main Steam Line Break Release Modeling

The radioactivity releases from this accident are addressed in a series of cases. The results from applicable cases are summed to obtain the total postulated dose. The release cases are (see Attachment 1):

FRP: Release from Faulted steam generator, Rupture leakage, Pre-incident RCS iodine spike activity. Release rate from steam generator equal to release rate from RCS. No hold-up or iodine decontamination credited. Eight hour release. Noble gas and iodine considered.

FRC: Release from Faulted steam generator, Rupture leakage, Concurrent RCS iodine spike activity plus T/S equilibrium activity. Release rate from steam generator equal to release rate from RCS. No hold-up or iodine decontamination credited. Eight hour release. Noble gas and iodine considered.

ITN: Release from Intact steam generators, Technical Specification limit leakage, RCS Noble gas activity. Release rate from steam generator equal to release rate from RCS. No hold-up credited. Eight hour release. Noble gas considered.

ITP: Release from Intact steam generators, Technical Specification limit leakage, Pre-incident iodine spike RCS activity. Release rate from steam generator equal to release rate from RCS. Eight hour release. No hold-up credited. However, release rate reduced by factor of 100 to reflect iodine partitioning after one hour.

Note: Partitioning credit is appropriate whenever the steam generator level is such that the tube leak location is submerged. In this event, the level in the intact steam generators will initially drop, but is assumed to be restored within one hour. See Assumption 1.8 below.

ITC: Release from Intact steam generators, Technical Specification limit leakage, Concurrent iodine spike plus T/S equilibrium RCS activity. Release rate from steam generator equal to release rate from RCS. Eight hour release. No hold-up credited. However, release rate reduced by factor of 100 to reflect iodine partitioning after one hour.

See note above under ITP

FLI: Release from Faulted steam generator, Liquid Iodine activity initially present in steam generator. Release rate based on release of 99.9999% of pre-accident activity in the liquid phase in 30 minutes.

Note: The 30 minute assumption is based on the assumption used in the original and all prior analyses. The exponential release model used front-loads the activity release, thus, the assumption will be retained as it is sufficiently conservative.

ILI: Release from Intact steam generators, Liquid Iodine activity initially present in steam generator. Release rate based on steaming rate of steam generator. Hold-up is modeled. Release rate reduced by a factor of 100 to reflect iodine partitioning.

Note: This partitioning is not affected by steam generator level since the activity was dispersed in the liquid prior to the event. Case ITP / ITC / ITN address leakage after the start of the event.

ASA: Release from All steam generators, Steam space activity initially present in steam generators, pre-incident steam generator activity, All nuclides. Instantaneous puff release (99.9999% in 1 second.).

For the pre-incident iodine spike cases FTP and ITP, a transient dose equivalent iodine-131 activity of 6 μCi/gm will be used (in this revision) to obtain the pre-incident activities for the five iodine nuclides.

For the co-incident iodine spike cases FTC and ITC, the iodine appearance rates are assumed equal to 500 times the iodine appearance rate that yields an operating steady-state 0.10 μCi/gm dose equivalent iodine-131 concentration. The iodine spike is additive to the postulated, existing iodine and noble gas equilibrium concentrations at the assumed steady-state concentration. At four hours post accident, the co-incident spike ceases (modeled by dividing iodine appearance rates by 500). This conservative assumption is retained from previous revisions.

For the ITN case, the noble gas concentrations associated with the 0.10 μCi/gm dose equivalent iodine-131 RCS equilibrium concentration are used.

For the FLI and ILI cases, the iodine activities in the steam generator liquid phase associated with the 0.05 μCi/gm secondary equilibrium concentration dose equivalent iodine-131 Technical Specification limit are used. Noble gases are assumed to enter the steam phase immediately.

For the ASA case, the iodine activities in the steam phase associated with the 0.05 μCi/gm secondary equilibrium concentration DE I-131 Technical Specification limit are used. The noble gas activities associated with the primary 0.10 μCi/gm RCS equilibrium concentration DE I-131 are used.

Percent Power / Percent Steam Generator Tubes plugged Sensitivity Analysis

Dose from the MSLB accident is primarily dependent upon releases from the faulted steam generator (at the Technical Specification activity concentration limit) and the release of RCS through the faulted steam generator. The source terms for each of these are mass dependent, which is in turn both power level and percent of tubes plugged dependent. As power level changes the source release for one of these increases while the other decreases. This necessitates a sensitivity analysis to determine which combination of percent power and percent plugging results in the highest overall dose as the result of a MSLB accident. This may result in the use of a particular mass that is not bounding for a specific release case, but when used in conjunction with the other mass values is bounding for the total of all release cases. For example, a steam generator steam mass may be used that is not bounding for the ASA case, but when used with the corresponding steam generator liquid mass is bounding for the total of all release cases.

In order to determine which combination of percent power and percent plugging (and their associated RCS and steam generator mass values) results in the highest dose, sets of source terms and radioactivity transfer rate constants were calculated for the following four cases: (1) 0% power, 0% plugging (2) 0% power, 30% plugging (3) 100% power, 0% plugging and (4) 100% power, 30% plugging. These cases were analyzed for control room thyroid CDE, the limiting dose quantity for the Unit 1 MSLB analysis.

The results of the sensitivity analysis performed for this revision produced the same conclusion as that done for the previous revision. The conditions of 0% power, 30% plugging, produce the bounding accident conditions, and are again used for the bounding conditions in the analysis. Only this combination of power and plugging is included in this calculation package, with the other combination analyses maintained on file.

INPUT DATA AND ASSUMPTIONS

1.0 Assumptions

1.1 The analysis of the main steam line break (MSLB) is based on the guidance provided in Chapter 15.1.5 of Reference 2 supplemented by Reference 3.

1.2 There is no failed fuel for the MSLB.

The Unit 1 UFSAR shows that DNB is not exceeded for a MSLB. In accordance with Reference 2, no fuel damage need be assumed if DNB is not exceeded.

1.3 The MSLB occurs outside of containment releasing activity from the faulted and the intact steam generators.

1.4 The transport of radioactivity from the point of release to the control room intake or offsite receptor is assumed to be instantaneous.

1.5 The control room is isolated by manual operator action within 30 minutes.

The validity of this assumption was challenged by the Onsite Safety Committee obtained timing data during validation of Emergency Operating Procedure[21,22] (EOP) changes related to that amendment. The results indicated that it would take 17 minutes for the operator to manual isolate the control room. This is well within the thirty minute period assumed. The margin is considered adequate to address uncertainty associated with the application of these results at Unit 1, and including the approximate 1.1 minute delay[23,24,25,26] in equipment response due to loss of AC power and subsequent diesel start and sequencing. See Attachment 2.

1.6 Incoming air is uniformly distributed throughout the control room volume.

This is a conservative assumption in that the radiation monitors will alarm when the exposure rate from the cloud of gases adjacent to the monitor exceeds the setpoint. Assuming complete mixing reduces the concentration and monitor exposure rate, thereby delaying the isolation actuation.

1.7 Loss of power is assumed coincident with the control room isolation actuation.

This assumption differs from that at Unit 2, where, loss of power is assumed coincident with the accident. The Unit 1 assumption is more conservative. However, the Unit 2 assumption meets the requirements of §3.1.1.3 of the UFSAR that states that a loss of offsite power is assumed if the postulated event or its effects results in a reactor or turbine trip. This requirement implies a coincident loss of power. Historically, this analysis has been performed assuming unavailability of the condenser at T = 0 due to the loss of power. This is conservative with respect to Assumption 1.7.

1.8 The level in the unaffected, intact steam generators is restored to greater than 5% narrow range within one hour.

In response to the rapid pressurization of the main steam line, main steam line isolation (<500 psig) will occur, pressurizer level will drop to below the safety injection actuation set point (1845 psig). When safety injection occurs, all three auxiliary feed water pumps will receive a start signal and will inject water into the steam generators. The EOP[21] will have the operator isolate feed water to the faulted steam generator. However, the EOP[27] directs the operator to ensure that (1) the discharge MOVs for the intact generators are fully open, and (2) once level is restored, that the level is controlled between 5% and 50%. It is significant to note, that if the level is less than 5% in all intact steam generators and feed water flow is less than 350 gpm, a heat sink red path critical safety function terminus is declared and function restoration procedure FR-H.1[28] is entered. As long as the heat sink is in a red path, all operator attention is directed to restoring the heat sink. Simulator training scenarios responses indicate that the level is restored to greater than 5% within 30 minutes from completion of blow down of the faulted generator. It is therefore reasonable to assume that partitioning be credited after one hour from the start of the event. The doubling of the expected time to cover the tubes was done to provide additional margin for this qualitative conclusion.

The validity of this assumption was challenged by the OSC during review of the technical specification amendment request for Unit 2. The Procedures group obtained timing data during validation of Unit 2 EOP changes related to that amendment. The results indicated that it would take 43 minutes to restore level. This is well within the one hour period assumed. The margin is considered adequate to address uncertainty associated with the application of these results at Unit 1. See Attachment 2.

1.9 The EDE result provided by TRAILS is assumed to correspond to the whole body photon guideline in NUREG 0800, Section 6.4[29], the skin DE to whole body beta, and the thyroid CDE to thyroid.

In the review of Revision 0 to this calculation package, the NRC staff accepted the use of these revised dose quantities.

2.0 Input Data

2.1 Reactor Coolant System Radioactivity Concentrations [30]

The concentrations used in this revision are calculated from the 1% failed fuel RCS liquid, steam generator liquid and steam generator steam activity concentrations[18,19], and assuming the following operating limits: 0.10 μCi/gm DE I-131 in primary liquid (RCS), 0.05 μCi/gm DE-I-131 in secondary liquid (steam generator liquid) and 6 μCi/gm DE I-131 in primary liquid (RCS) during transient conditions.

Radio-nuclide	$[A]_{i\,0.10}$ RCS (μCi/gm)	$[A]_{i\,0.05}$ S/G Liquid (μCi/gm)	$[A]_{i\,0.10\,steam}$ S/G Steam (μCi/gm)	$[A]_{i\,6}$ RCS (μCi/gm)
Kr-83m	1.15E-02		1.84E-07	
Kr-85m	4.02E-02		5.39E-07	
Kr-85	4.22E+00		5.71E-05	
Kr-87	2.70E-02		3.64E-07	
Kr-88	7.54E-02		1.01E-06	
Kr-89	2.19E-03		2.94E-08	
Xe-131m	1.37E-01		1.84E-06	
Xe-133m	1.14E-01		1.55E-06	
Xe-133	8.47E+00		1.14E-04	
Xe-135m	2.62E-02		2.46E-06	
Xe-135	2.82E-01		4.10E-06	
Xe-137	5.39E-03		7.28E-08	
Xe-138	1.85E-02		2.49E-07	
I-131	7.83E-02	4.19E-02	4.19E-04	4.70E+00
I-132	3.09E-02	6.74E-03	6.74E-05	1.85E+00
I-133	1.17E-01	4.56E-02	4.56E-04	7.04E+00
I-134	1.73E-02	8.82E-04	8.82E-06	1.04E+00
I-135	6.75E-02	1.59E-02	1.59E-04	4.05E+00

Note: Steam generator steam concentration for noble gas is based on RCS concentration, primary-to-secondary leak rate and steam flow. Iodine concentration is based on steam generator liquid and 0.01 partitioning between the liquid and steam phases.

2.2 Concurrent Iodine Spike Rate (μCi/sec) - See Appendix 1 [Calculated]

2.3 Concurrent Iodine Spike Duration = 4 hours [1,10,31,32]

2.4 Technical Specification Primary-to-Secondary Leakage [4]

150 gpd any one steam generator, 450 gpd total for all three steam generators

2.5 RCS Density @ 576.6 °F = 44.13 lb/ft^3 [31]

2.6 Primary Coolant Mass [33]

Component	Value	x 44.13 lb/ft^3
RCS excluding PZR, 30% plugging	7127 ft^3	(3.145E5 lb)
PRZ water @ 0% power	340 ft^3	(1.500E4 lb)
RCS @ 0% power, 30% plugging	7467 ft^3	(3.295E5 lb)

2.7 Primary-to-Secondary Leakage Mass = 1 g/cc [Assumption,34]

2.8 Secondary Side Mass: [33,35]

Component	Value	+10%
Steam generator liquid @ 0% power, 30% plugging	148104 lbm	162914 lbm
Steam generator steam @ 0% power, 30% plugging	5781 lbm	6359 lbm

Note: The steam generator liquid and steam mass values provided by Westinghouse[29] are given with an associated uncertainty (±10%) to be applied in the bounding direction. The +10% values are listed for use in this calculation based on the following: The steam generator liquid mass is used in the calculation of radioactivity transfer rate constant for the ILI case only. It is also used in the source term calculation for the ILI and the FLI cases. For the ILI case changing the steam generator liquid mass is offset by the proportional changes in the radioactivity transfer rate constant and in the source term. However, for the FLI case, increasing the steam generator liquid mass increases the source term but the radioactivity transfer rate constant remains the same, resulting in increased dose. Therefore, the maximum steam generator Liquid mass is bounding for the Unit 1 MSLB accident analysis. The steam generator steam mass is used in the ASA case only. For the ASA case, steam generator steam mass is used to calculate the source term, but is not used to calculate the radioactivity transfer rate constant. As the mass increases so does the source term and subsequently the bounding dose (concurrent iodine spike, 0% power, 30% steam generator tubes plugged). Therefore, the maximum steam generator Steam mass is bounding for the Unit 1 MSLB analysis.

2.9 Iodine Partition Factors: Faulted steam generator = 1.0 [2,10,32]
Intact steam generators 0-1 hour = 1.0
Intact steam generators after 1 hour = 0.01

See Assumption 1.8 for justification of 1 hr partition factor.

2.10 Time to Isolate Faulted Steam Generator = 8 hours [1,10,31,32]

2.11 Steam Release from Faulted Steam Generator: [Assumption,10,32]

0 - 0.5 hours = all of the liquid and steam mass initially present
0.5 - 8 hours = mass for total P-to-S leak rate

2.12 Steam Release from Intact Steam Generators: [10,31,32]

0-2 hrs = 336,776 lb
2-8 hrs = 705,393 lb

2.13 Offsite Breathing Rate (0-8 hours) = 3.47E-4 m^3/sec [36]

2.14 Accident χ/Q Values - Offsite (sec/m^3) [14]

Location	0-2 hrs	0-8 hrs
EAB	1.04E-3	
LPZ		6.04E-5

Note: Because the release ends at 8 hours post-accident, χ/Q values beyond 8 hours are not used in this analysis.

Control Room Parameters

The control room design and operating parameters used in this calculation are consistent with the current analysis of record with the exception of the change to the charcoal filter iodine removal efficiency. The 20 minute delay to manually start the emergency pressurization fans after auto-start system failure that was added in Revision 6 is removed, as previously discussed.

See Attachment 3 for a time line and summary of control room parameters assumed for this analysis.

2.15 Normal control room unfiltered air intake rate = 500 cfm [10,31,32,37]

2.16 Time post-accident to initiate control room isolation = 30 minutes [Attachment 2]

Note: 30 minutes has been used in previous revisions of this calculation. See assumption 1.5, above.

2.17 Control room emergency bottled air pressurization system (CREBAPS) operation T = 30 to 90 minutes [38,39]

Note: Design of this system is such that the control room will be maintained at 0.125" wc positive pressure (with respect to adjacent areas) for one hour. The minimal affect of radioactive material removal by CREBAS is conservatively not modeled in this analysis. System actuation is assumed to occur at 30 minutes, with any delay due to loss of AC power being well within the margin discussed in Assumption 1.5, above.

2.18 Unfiltered air inleakage during CREBAPS/emergency pressurization fan operation = 10 cfm [29]

Assumed 10 CFM unfiltered inleakage is consistent with all BVPS DBA analyses whenever these systems are in operation.

2.19 Minimum air flow rate to maintain the control room at 0.125" wc positive pressure = 600 cfm [41]

2.20 Emergency pressurization fan filtered air intake flow rate (maximum) = 1030 cfm [38]

Note: Maximum fan intake rate has been demonstrated to result in the maximum, bounding dose for the limiting case (concurrent iodine spike, 0% power, 30% steam generator tubes plugged) based on sensitivity analyses conducted in previous revisions of the calculation and verified and maintained on file for this revision.

2.21 Control room emergency pressurization system filter removal efficiency: [42,50,51,52]

Noble gas	0%
Iodine	99% (charcoal medium only)
Filter bypass	1%
Iodine (effective)	96.0%

Note: The effective value is calculated for TRAILSPC processing by first considering the filter efficiency that may be credited in DBA analyses as given in NRC Generic Letter 99-02 and then adjusting this filter bypass, unfiltered in-leakage and filtered intake as follows:

$$Penetration\ (filter) = (1-0.99) * 2 = 0.02 \quad \text{(By G.L. 99-02)}$$

$$Penetration\ (total) = 0.02 + 0.01 = 0.03 \quad \text{(Including 1\% bypass)}$$

$$Filter\ efficiency\ (total) = 1.00 - 0.03 = 0.970$$

$$Efficiency\ (effective) = \frac{(0.970 * Filtered\ Flow) + (0.0 * Unfiltered\ Flow)}{Filtered\ Flow + Unfiltered\ Flow}$$

$$Efficiency\ (effective) = \frac{(0.970 * 1030) + (0.0 * 10)}{1030 + 10} = 0.9607$$

2.22 Post release control room purge start and duration T = 8 to 8.5 hours [22]

2.23 Post release control room purge flow rate (minimum) = 28,000 cfm [22,43]

Note: Using the minimum purge flow rate minimizes removal of radioactive material from the control room after the release has ended and provides the maximum, bounding doses.

2.24 Post control room purge normal intake flow rate = 500 cfm [10,22,31,32,37]

2.14 Accident χ/Q Values – Control Room (0-8 hrs) = 2.43E-03 (sec/m^3) [44,45,46]

Note: The χ/Q value listed is for the turbine building as a release point. This value has historically been used for all of the release cases and is conservative with regard to that of the main steam valve area. Because the release ends at 8 hours post-accident, χ/Q values beyond 8 hours are not applicable in this analysis.

Note: References 44 and 45 are related to Unit 2 submittals. Revised atmospheric dispersion factors were approved by the NRC for both Units 1 and 2 therein. Because this release is conservatively modeled as a having a two hour duration, atmospheric dispersion factors beyond this time are unnecessary.

CALCULATION

All of the values calculated in this package for entry into TRAILSPC input files are calculated via an EXCEL spreadsheet and are rounded at the completion of the calculation. Specifically, during a calculation, all places are carried until the final number, and then the final number is rounded to the same number of significant figures as any number used in the calculation with the least number of significant figures. The number is then entered into the TRAILSPC input file. At the completion of the TRAILSPC runs and the summation of dose from various cases, the final result is also rounded to the number of significant figures of any input number with the least number of significant figures. Hence, **reproduction of this calculation, without the same spreadsheet and protocol, may cause "rounding" differences.**

1.0 Source Term: Technical Specification Limit DE I-131 Activity

Input Datum 2.1 provides the activity concentrations in uCi/gm, in the RCS primary, the secondary liquid, the secondary steam and in the RCS primary that are assumed at the start of the accident. For use in the calculation of isotopic release quantities and dose using TRAILSPC, these values must be expressed as total activity, in uCi. Total activity is the product of the concentrations associated with the limiting DE I-131 concentration in uCi/gm and the applicable mass in gm. The following formulas were used to calculate activity for the bounding conditions of 0% reactor power, 30% steam generator plugging.

NOTE: The RCS mass value used in the calculation of the ITC and FRC cases does not include the pressurizer volume. The ITC and FRC cases include a concurrent iodine spike. Since the concurrent iodine spike occurs at the onset of the accident it is assumed that the pressurizer volume does not equilibrate with the RCS volume that includes the iodine spike. Therefore, the release rate is calculated using RCS volume less the pressurizer volume. However, the Technical Specification limit RCS activity is in equilibrium with the pressurizer volume. To offset the increase in Technical Specification limit RCS activity that will be released using the pressurizer less volume release rate, the activity is calculated with RCS mass less the pressurizer volume also.

NOTE: The steam generator liquid and steam mass values provided by Westinghouse[35] are given with an associated uncertainty (±10%) to be applied in the bounding direction. The steam generator liquid and steam mass values used are the +10% values as determined (and noted) below:

$A_{I\,0.20}$ = $[A]_{I\,0.10}$ (uCi/gm) x RCS mass (lb) x 453.592 (gm/lb),
= Source Term for the ITN, ITC and FRC Case

$A_{I\,0.10}$ = $[A]_{I\,0.05}$ (uCi/gm) x S/G liquid mass (lb) x 453.592 (gm/lb)
= Source Term for ILI and FLI Cases

$A_{I\,steam}$ = $[A]_{I\,steam}$ (uCi/gm) x S/G steam mass (lb) x 453.592 (gm/lb)
= Source Term for ASA Case

$A_{I\,12}$ = $[A]_{I\,6}$ (uCi/gm) x RCS mass (lb) x 453.592 (gm/lb)
= Source Term for FRP and ITP Cases

The results for the bounding case is summarized in the table below:

Source Term: DE I-131 0.10 μCi/g (RCS) and 0.05 (secondary liquid), 0% power, 30% plugging

Radio-nuclide	ITN $A_{I\,0.10}$ TS RCS (uCi)	FRC ITC $A_{I\,0.10}$ TS RCS (uCi)	ILI FLI $A_{I\,0.05}$ TS S/G Liquid (uCi)	ASA $A_{I\,0.10\,steam}$ TS S/G Steam (uCi)	FRP ITP $A_{I\,6}$ TS Transient RCS (uCi)
Kr-83M	1.72E+06	1.64E+06		5.32E-01	1.72E+06
Kr-85M	6.01E+06	5.73E+06		1.55E+00	6.01E+06
Kr-85	6.31E+08	6.02E+08		1.65E+02	6.31E+08
Kr-87	4.03E+06	3.85E+06		1.05E+00	4.03E+06
Kr-88	1.13E+07	1.08E+07		2.92E+00	1.13E+07
Kr-89	3.27E+05	3.12E+05		8.48E-02	3.27E+05
Xe-131M	2.05E+07	1.95E+07		5.32E+00	2.05E+07
Xe-133M	1.71E+07	1.63E+07		4.47E+00	1.71E+07
Xe-133	1.27E+09	1.21E+09		3.30E+02	1.27E+09
Xe-135M	3.91E+06	3.73E+06		7.10E+00	3.91E+06
Xe-135	4.21E+07	4.02E+07		1.18E+01	4.21E+07
Xe-137	8.05E+05	7.68E+05		2.10E-01	8.05E+05
Xe-138	2.76E+06	2.64E+06		7.19E-01	2.76E+06
I-131		1.12E+07	3.10E+06	1.21E+03	7.02E+08
I-132		4.40E+06	4.98E+05	1.94E+02	2.77E+08
I-133		1.67E+07	3.37E+06	1.32E+03	1.05E+09
I-134		2.47E+06	6.52E+04	2.54E+01	1.55E+08
I-135		9.64E+06	1.18E+06	4.59E+02	6.06E+08

2.0 Activity Transfer (Release) Rate Constants (λ)

The conversion of water volume to mass will assume a density of 1.000 gm/cm^3 (standard temperature and pressure)[34,47]. The density of RCS at operating temperature and pressure is closer to 0.72 gm/cm^3. However, as water is released the density increases rapidly towards 1.000 gm/cm^3 as the water chills. Also, primary to secondary leak rate is routinely measured at a density approaching 1.000 gm/cm^3. A density gradient also exists for steam generator liquid between 1.000 gm/cm^3 for incoming auxiliary feed water and lower values associated with steam. A density of 1.000 gm/cm^3 is bounding for all intermediate values of density that may occur once an accident is initiated.

The transfer rate constants (λ) are calculated by dividing the release mass flow rate (F) by the compartment total mass (M) with appropriate unit conversion.

2.1 FRP, FRC

Release rate based on rupture primary-to-secondary leak rate. Total leak rate includes accident induced plus allowable pre-accident leakage as permitted by facility Technical Specifications. Using sensitivity analysis not included in this calculation package, 14.5 gpm accident induced leakage, in combination with the other limiting operating and design parameters, has been determined to be the maximum accident primary-to-secondary leak rate that will maintain the accident doses within acceptable limits. The results for the bounding case of 0% power, 30% plugging are listed in the tables below.

NOTE: For the FRC case the RCS mass values used exclude pressurizer volume since in the first 4 hours post accident, when the concurrent iodine spike occurs, the pressurizer volume is assumed to not equilibrate with the remaining RCS volume.

FRC Release Rate Constant:

$$\lambda = \frac{(145\ gal/\min + (150\ gal/d\ /\ 1440\min/d)) * 37853\ cc/gal * 1\ g/cc}{(7127\ ft^3 * 4413\ lbm/ft^3) * 453592\ g/lbm * 60\ s/\min} = 6.458E-06\ s^{-1}$$

FRP Release Rate Constant:

$$\lambda = \frac{(145\ gal/\min + (150\ gal/d\ /\ 1440\min/d)) * 37853\ cc/gal * 1\ g/cc}{(7467\ ft^3 * 4413\ lbm/ft^3) * 453592\ g/lbm * 60\ s/\min} = 6.164E-06\ s^{-1}$$

2.2 ITN, ITP and ITC

The ITN release rate is based on Technical Specification primary-to-secondary leak rate in the 2 intact steam generators. The ITP release rate is equal to the ITN radioactivity transfer rate constant for the first hour. After the first hour, the ITP release rate is reduced by a factor of 100 to account for partitioning. The ITC is calculated the same way as the ITP and ITN radioactivity transfer rate constants with the exception of the RCS mass value used. The RCS mass value used excludes pressurizer volume since in the first 4 hours post accident, when the concurrent iodine spike occurs, the pressurizer volume will not equilibrate with the remaining RCS volume. After the first hour, the ITC release rate is reduced by a factor of 100 to account for partitioning.

NOTE: Since the release rate represents 2 steam generators (2 x 150 gal/day = 300 gal/day), the source term need not be multiplied by 2 in TRAILSPC.

ITN and ITP (ITP 0-1 hour only) release rate constant:

$$\lambda = \frac{300\ gal/d * 3785.3\ cc/gal * 1\ g/cc}{(7467\ ft^3 * 44.13\ lbm/ft^3) * 453.592\ g/lbm * 86400\ s/\min} = 8.794E-08\ s^{-1}$$

$\lambda = 8.794E-08\ s^{-1} * 0.01 = 8.794E-10\ s^{-1}$ *ITP only, after one hour.*

ITC release rate constant:

$$\lambda = \frac{300\ gal/d * 37853\ cc/gal * 1\ g/cc}{(7127\ ft^3 * 44.13\ lbm/ft^3) * 453.592\ g/lbm * 86400\ s/\min} = 9.213E-08\ s^{-1}$$

$\lambda = 9.213E-08\ s^{-1} * 0.01 = 9.213E-10\ s^{-1}$ *ITC after one hour.*

2.3 FLI

Release from the faulted steam generators of liquid activity initially in steam generators with hold-up credited. In order to model the release of the initial activity in 30 minutes, it is assumed that a reduction factor of 1E-6 represents 99.9999% of the activity. The radioactivity transfer rate constant is calculated as follows:

$$1E-06 = e^{-\lambda * 30\,min * 60\,s/min}$$

$$\lambda = 7.6753E-03\ s^{-1}$$

2.4 ILI

Release rate for 2 intact steam generators of liquid activity initially present, with hold-up and partitioning credited. The steam release for 2 hours and 2-8 hours represents the release from both steam generators. In order to determine the release rate the steam mass is divided by the mass of two steam generators. Partitioning applies thus the multiplier of 0.01:

The steam generator mass value is the 0% power, 30% plugging liquid mass +10% as determined in the mass sensitivity analysis. The 0-2 hour value will be entered as the base value and the TRAILSPC XREM multiplier after 2 hours is the ratio of the 2-8 hr value over the 0-2 hr value. Since the release rate represents one steam generator, the source term is multiplied by 2 in the TRAILSPC input file to account for the release from 2 intact steam generators.

ILI release rate constant 0-2 hours:

$$\lambda = \frac{336776\ lbm\ /\ (2\ h * 3600\ s/h)}{162914\ lbm * 2} = 1.43555E-06\ s^{-1}$$

ILI release rate constant 2-8 hours:

$$\lambda = \frac{705393\ lbm\ /\ (6\ h * 3600\ s/h)}{162914\ lbm * 2} = 1.00228E-06\ s^{-1}$$

$$XREM\ \ (2-8\ hours) = \frac{1.43555\,E-06\ s^{-1}}{1.00228\,E-06\ s^{-1}} = 0.698182$$

2.5 ASA

Release from all steam generators of steam activity (all radionuclides) initially in the steam generators. In order to model the release of 100 % of the initial activity in 1 second, it is assumed that a reduction factor of 1E-6 represents 99.9999 % of the activity. The radioactivity transfer rate constant is calculated as follows:

$$1E-06 = e^{-\lambda * 1\,s}$$

$$\lambda = 13.816\ s^{-1}$$

RESULTS

The TRAILSPC input and output files are provided as Attachment 4, and the dose results summarized below.

Control Room Doses

Co-incident Spike

Case	Thyroid CDE (mrem)	External EDE (mrem)	Skin DE (mrem)
ASA	2.41E+00	7.78E-05	9.50E-04
FLI	2.06E+03	6.56E-02	7.59E-01
ILI	1.49E+01	4.85E-04	6.40E-03
ITN	0.00E+00	1.65E-03	1.62E-01
ITC	4.18E+01	3.50E-03	3.28E-02
FRC	1.93E+04	1.80E+00	3.35E+01
Total:	2.14E+04	1.87E+00	3.45E+01

Pre-incident Spike

Case	Thyroid CDE (mrem)	External EDE (mrem)	Skin DE (mrem)
ASA	2.41E+00	7.78E-05	9.50E-04
FLI	2.06E+03	6.56E-02	7.59E-01
ILI	1.49E+01	4.85E-04	6.40E-03
ITN	0.00E+00	1.65E-03	1.62E-01
ITP	8.02E+01	4.17E-03	4.32E-02
FRP	8.20E+03	5.53E-01	1.62E+01
Total:	1.04E+04	6.25E-01	1.72E+01

EAB 0 - 2 hour Doses

Co-incident Spike

Case	Thyroid CDE (mrem)	External EDE (mrem)	Skin DE (mrem)
ASA	1.69E+00	1.28E-03	7.29E-04
FLI	1.44E+03	1.08E+00	5.84E-01
ILI	2.94E+01	2.04E-02	1.14E-02
ITN	0.00E+00	8.41E-03	3.29E-02
ITC	1.06E+02	2.68E-01	1.08E-01
FRC	2.81E+04	6.62E+01	2.92E+01
Total:	2.97E+04	6.76E+01	2.99E+01

Pre-incident Spike

Case	Thyroid CDE (mrem)	External EDE (mrem)	Skin DE (mrem)
ASA	1.69E+00	1.28E-03	7.29E-04
FLI	1.44E+03	1.08E+00	5.84E-01
ILI	2.94E+01	2.04E-02	1.14E-02
ITN	0.00E+00	8.41E-03	3.29E-02
ITP	1.11E+02	1.45E-01	6.86E-02
FRP	1.50E+04	1.89E+01	1.11E+01
Total:	1.66E+04	2.02E+01	1.18E+01

LPZ 0 - 30 days Doses

Co-incident Spike

Case	Thyroid CDE (mrem)	External EDE (mrem)	Skin DE (mrem)
ASA	9.81E-02	7.46E-05	4.23E-05
FLI	8.37E+01	6.29E-02	3.39E-02
ILI	5.11E+00	3.03E-03	1.81E-03
ITN	0.00E+00	1.61E-03	7.37E-03
ITC	8.67E+00	1.93E-02	8.03E-03
FRC	1.79E+04	2.84E+01	1.35E+01
Total:	1.80E+04	2.85E+01	1.36E+01

Pre-incident Spike

Case	Thyroid CDE (mrem)	External EDE (mrem)	Skin DE (mrem)
ASA	9.81E-02	7.46E-05	4.23E-05
FLI	8.37E+01	6.29E-02	3.39E-02
ILI	5.11E+00	3.03E-03	1.81E-03
ITN	0.00E+00	1.61E-03	7.37E-03
ITP	6.81E+00	8.73E-03	4.16E-03
FRP	3.16E+03	3.08E+00	2.08E+00
Total:	3.26E+03	3.16E+00	2.13E+00

CONCLUSION

The analysis documented herein has established that the maximum primary-to-secondary leak rate that could be tolerated during a MSLB outside of containment is 14.6042 gpm (14.5 gpm accident induced + 150 gpd Technical Specification limit) if the RCS specific activity is maintained ≤0.10 μCi/gm DE I-131 and secondary liquid specific activity is maintained ≤0.05 μCi/gm DE I-131. The EAB thyroid dose is limiting.

Offsite doses are a small fraction of the applicable regulatory limits of 10 CFR 100.11[48] of 300 rem thyroid and 25 rem whole body, and are less than the more restrictive guidance criteria in the Standard Review Plan[2] of 30 rem thyroid and 2.5 rem whole body. Control room operator doses are less than the 10 CFR 50[49] criteria of 5 rem whole body or its equivalent to any part of the body.

The bounding doses for the main steam line break design basis accident at Beaver Valley Unit 1 are represented by the event that includes the design basis co-incident iodine spike. These values, reported consistent with the above guidance and UFSAR reporting past practice, are:

Co-incident Iodine Spike Analysis Summary:

	Thyroid CDE (rem)	EDE (rem)	Skin DE (rem)
Control room	2.2E+01	<2E-01	<1E+00
EAB	3.0E+01	<2E-01	N/A
LPZ	1.8E+01	<2E-01	N/A

The doses for the pre-accident iodine spike are all within the above values.

REFERENCES

1. BVPS Unit 1 UFSAR, Chapter 14, Section 14.2.5, Major Secondary System Pipe Rupture

2. USRNC, Standard Review Plan for the Review of Safety Analysis Reports for Nuclear Power Plants. NUREG 0800, Chapter 15, Section 15.1.5, Revision 5; 1987

3. USNRC, Voltage-Based Repair Criteria for Westinghouse Steam Generator Tubes Affected by Outside Diameter Stress Corrosion Cracking, Generic Letter 95-05

4. BVPS Unit 1 Technical Specification 3/4.4.6.2, Operational Leakage

5. BVPS Unit 1 Technical Specification 3/4.4.8, Specific Activity

6. BVPS Unit 1 Technical Specification 3/4.7.1.4, Activity

7. SWEC, Control Room Habitability Due to Design Basis Accident (except LOCA) at BVPS-2, 12241 UR(B) 445, 1987

8. SWEC, FSAR Section 15.6.5 - LOCA Releases and Doses - Site and Control Room. 12241 UR(B) 190, 1987

9. SWEC, Doses to the Combined Control Room due to LOCA at BVPS-1. 12241 UR(B) 450, 1987

10 SWEC, Combined BV1-BV2 Control Room Habitability Due to Design Basis Accidents (except LOCA) at BV1, 12241-UR(B)-456, 1987

11. BVPS, Updated Final Safety Analysis Report Unit 2, Chapter 15

12. Westinghouse, Beaver Valley Power Station-1 Steam Generator Tube Plugging Criteria for Indications at Tube Support Plates, WCAP-14122, dtd 7/94

13. USNRC, Beaver Valley Power Station Unit No. 1 Amendment 184 to Facility Operating License 50-334, February 1995

14. BVPS, RG1.145 Short-Term Accident X/Q Values for EAB and LPZ, Unit 1 and Unit 2, based on 1986-1995 Observations. ERS-SFL-96-021

15. DiNunno, J.J., etal, Calculation of Distance Factors for Power and Test Reactor Sites, USAEC TID 14844, 1962

16. USEPA, Limiting Values of Radionuclide Intake and Air Concentration and Dose Conversion Factors for Inhalation, Submersion, and Ingestion, Federal Guidance Report No. 11, EPA-520/1-88-020

17. BVPS, Control Room Pressurization Fan Flow Rate. Condition Report 972390, dtd 12/26/97

18 SWEC Calculation Package 12241/11700-UR(B)-478, Design Reactor Core Inventory (3.96% Enrichment) and Associated Equilibrium Primary and Secondary Coolant Activities for BVPS, 1999

19 SWEC Calculation Package 12241/11700-UR(B)-479, Radiological Source Terms for Accident Analyses —Composite Equilibrium Reactor Core Inventory (3.6% - 5% Initial Enrichment) and the Associated Design Primary and Secondary Coolant Activities for BVPS, 1999

REFERENCES (cont)

20. BVPS Calculation Package ERS SFL 96 004, TRAILS_PC: Transport of Radioactive Material in Linear Systems, PC Version v1.0a, 2000

21. BVPS Emergency Operating Procedure, 1OM-53A.1.E-2 Faulted Steam Generator Isolation

22. BVPS Unit 1 Operating Procedure, 1/2OM-44A.4A.A, Post Control Room Habitability System Actuation/Recovery

23. BVPS Calculation Package ERS-AJL-99-002, Generic Control Room Modeling, 1999

24. BVPS Licensing Requirements Manual, Table 3.2-1, Engineered Safety Features Response Times

25. BVPS Unit 1 Operating Manual OST 1.36.3

26. BVPS Unit 2 Operating Manual OST 2.36.3

27. BVPS Emergency Operating Procedure, 1OM-53A.1.E-1, Loss of Reactor or Secondary Coolant

28. BVPS Emergency Operating Procedure, 1OM-53A.1.FR-H.1, Response to Loss of Secondary Heat Sink

29. USRNC, Standard Review Plan for the Review of Safety Analysis Reports for Nuclear Power Plants. NUREG 0800, Chapter 6, Section 6.4, Revision 2; 1981

30. BVPS Calculation Package ERS-AJL-99-007, Calculation of Technical Specification Activity Concentrations for RCS Liquid, Steam Generator Liquid and Steam Generator Steam for Units 1 and 2, 2000

31. BVPS, Design basis accident parameter verification - Unit 1, BVPS - Engineering Memorandum No. 116252, dtd 08/01/98

32. SWEC, Doses to the Combined Control Room Due to a Main Steam Line Break at BVPS-1, 12241-UR(B)-448, 4/17/87

33. BVPS, Design basis accident parameter verification - Unit 2, BVPS - Engineering Memorandum No. 116251, dtd 12/04/98

34. USNRC, Potential Inconsistency in the Assessment of the Radiological Consequences of a Main Steam Line Break Associated with the Implementation of Steam Generator Tube Voltage-Based Repair Criteria, Information Notice 97-79

35. DLC, Steam Generator Liquid and Steam Masses, BVPS - Engineering Memorandum No. 115783, dtd 1/20/98 (Includes Westinghouse Ltr NSD-SAE-ESI-98-027, dtd 1/7/98)

36. USNRC, Assumptions Used for Evaluating the Potential Radiological Consequences of a Loss of Coolant Accident for Pressurized Water Reactors. Regulatory Guide 1.4, Revision 2; 1974

37. BVPS Unit 2 UFSAR, Chapter 6 Table 6.4.1, Control Room Envelope Design Parameters (Note: This UFSAR Section is applicable to the Unit 1 (common) control room)

38. BVPS, Dilution Flow for Health Physics Control Room Dose Calculation, Engineering Memorandum No. 115766, dtd 1/15/98

REFERENCES (cont)

39. BVPS, CREBAPS Design Basis Testing, Engineering Memorandum No. 115735, dtd 1/14/98

40. Deleted in Revision 7

41. BVPS, Minimum Air Flow to Maintain Control Room Pressurized to 1/8" wc, Engineering Memorandum No. 117830, dtd 4/15/99

42. BVPS Unit 1 Technical Specification 3/4.7.7, Control Room Emergency Habitability Systems

43. BVPS, Minimum Control Room Ventilation Fan Flow Rates, Engineering Memorandum No. 115712, dtd 1/5/98

44. DLCo Letter, Beaver Valley Power Station Unit No. 2, Docket No. 50-412, License No. NPF-73, Offsite Dose Analysis to Support Operating License Change Request No. 57, February 25, 1992

45. BVPS Unit 2 License Amendment 57 and Accompanying USNRC Safety Evaluation, Docket No. 50-412, Issued September 28, 1993

46. BVPS Unit 1 UFSAR Chapter 2, Table 2.2-12, Main Control Room X/Q Values

47. EPRI, Review of Iodine Spike Data From PWR Power Plants in Relation to SGTR with MSLB, TR-103680, draft, December 1993

48. Title 10 Code of Federal Regulations, Part 100 §100.11, Determination of exclusion area, low population zone, and population center distance

49. Title 10 Code of Federal Regulations, Part 50, Appendix A, Criterion 19, Control Room

50. USNRC Generic Letter 99-02, Laboratory Testing of Nuclear-Grade Activated Charcoal, June 3, 1999

51. BVPS License Amendment Request 1A-263/2A138, Revision 1, Letter No. L-00-046, May 12, 2000

52. USNRC Draft Regulatory Guide DG-1102 (Proposed Revision 3 to Regulatory Guide 1.52), Design, Inspection, and Testing Criteria for Air Filtration and Adsorption Units of Post-Accident Engineered-Safety-Feature Atmosphere cleanup Systems in Light-Water-Cooled Nuclear Power Plants, October 2000

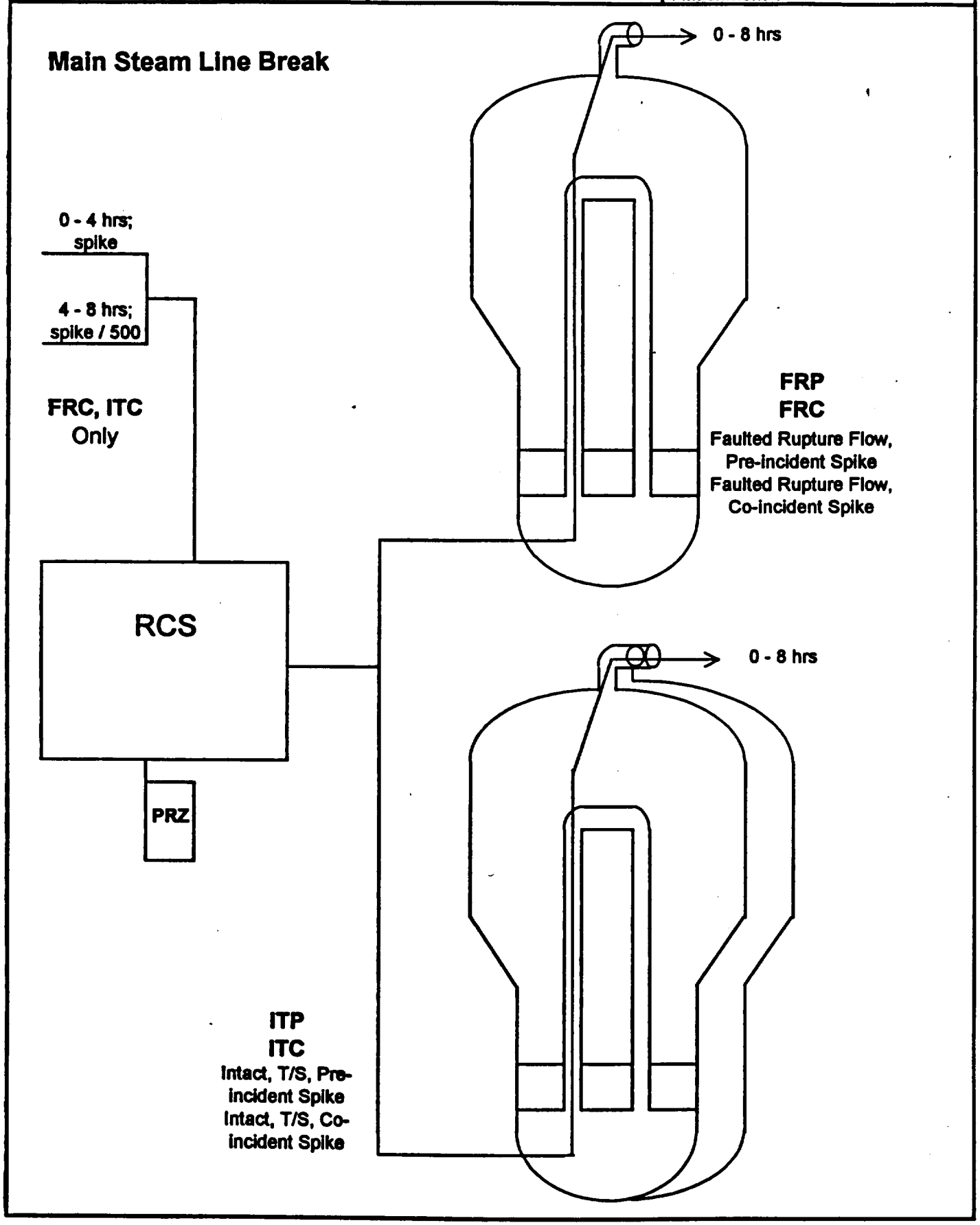
Main Steam Line Break
0 - 8 hrs
0 - 4 hrs; spike
4 - 8 hrs; spike / 500
FRC, ITC Only
FRP
FRC
Faulted Rupture Flow, Pre-incident Spike
Faulted Rupture Flow, Co-incident Spike
RCS
PRZ
0 - 8 hrs
ITP
ITC
Intact, T/S, Pre-incident Spike
Intact, T/S, Co-incident Spike

Main Steam Line Break

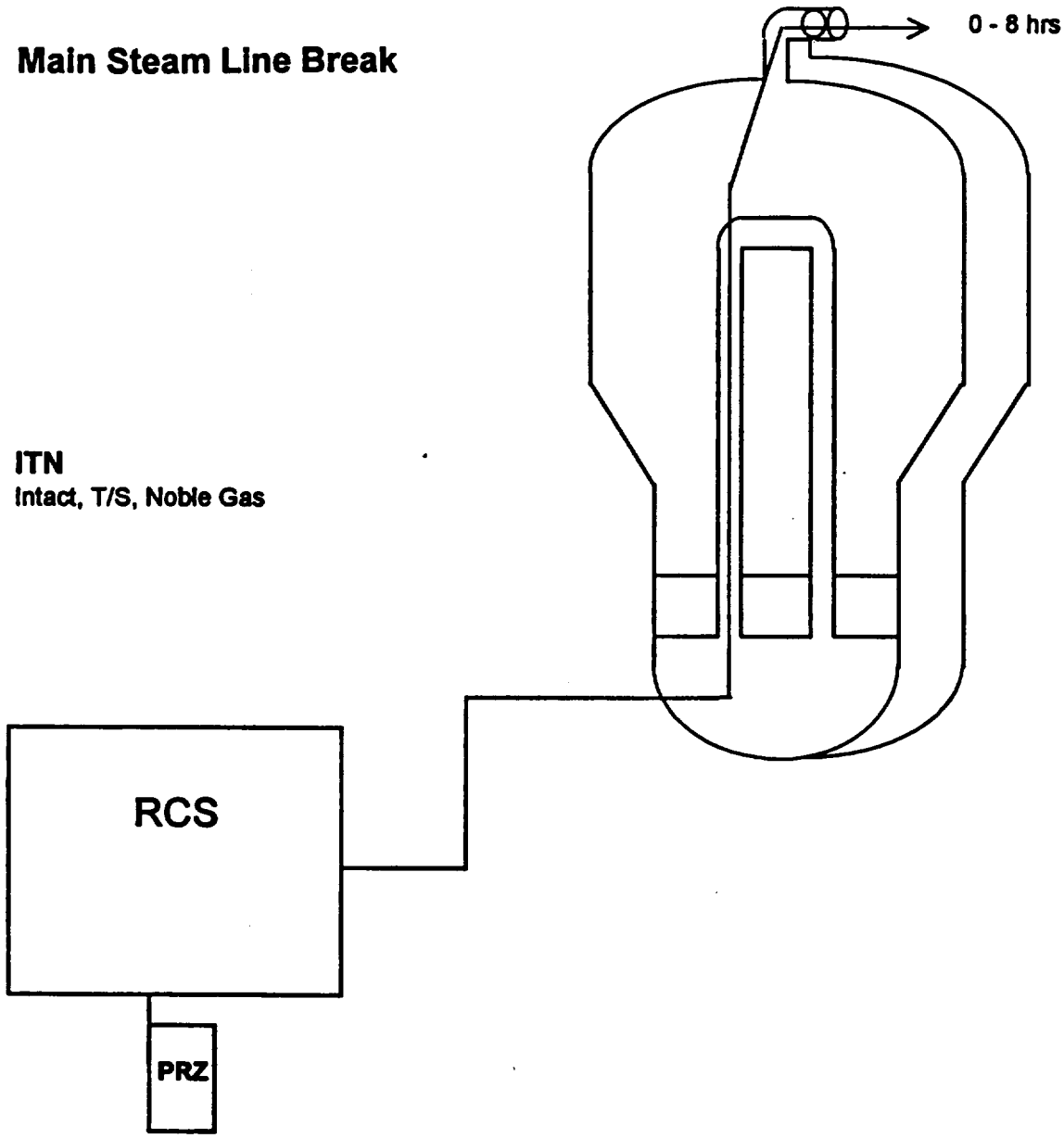

ITN
Intact, T/S, Noble Gas

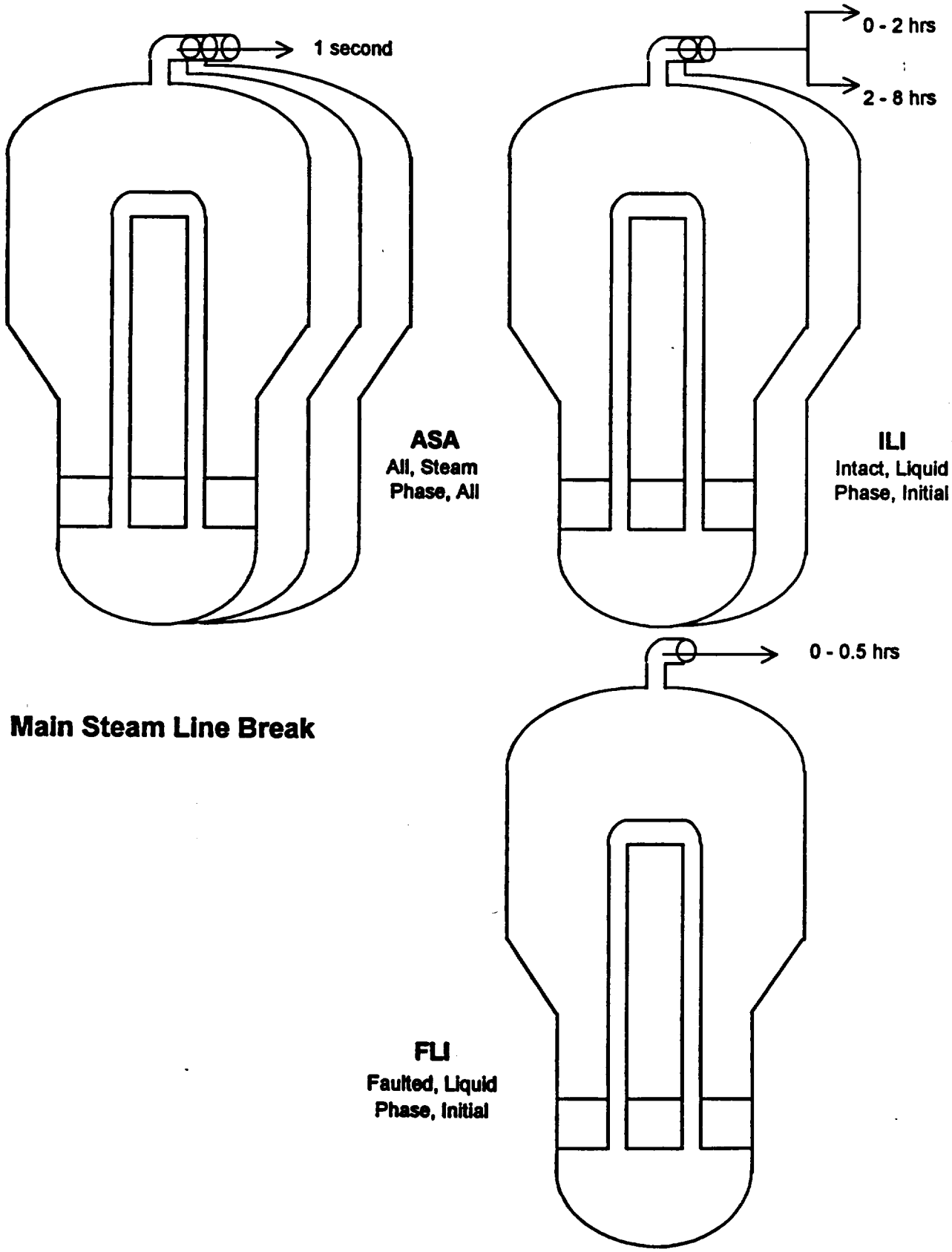
1 second
0 - 2 hrs
2 - 8 hrs
ASA
All, Steam
Phase, All
ILI
Intact, Liquid
Phase, Initial
0 - 0.5 hrs
Main Steam Line Break
FLI
Faulted, Liquid
Phase, Initial

Duquesne Light Company
Nuclear Power Division
Operations Experience Department

MEMORANDUM

TO: S. F. LaVie

FROM: C. O'Neill CO

LOCATION: SOSB-4

DATE: September 17, 1996

SUBJECT: MSLB Control Room Isolation Timing Validation

In your memo of 7/3/96, you requested assistance in obtaining time-related data for support of the Unit 2 Alternate Plugging Criteria assumptions based on a EOP Simulator Validation. E-2, "Faulted Steam Generator Isolation" (IB/2) was validated on September 17, 1996 with the following results:

- The time from the reactor trip until CREBAPS was manually actuated was approximately 1000 seconds (≈17 minutes)
- The time from the reactor trip until SG NR level was recovered to >5% in the unaffected SGs was approximately 2600 seconds (≈43 minutes)

The scenario run was for a 8 E+5 LBM/HR steam break (20%), outside CNMT on the B SG. This case is considered conservative since SLI was delayed which prolonged the SG blowdown and maximized the mass loss from the unaffected SGs. For larger breaks, reactor trip, safety injection and SLI occur almost simultaneously, and thus minimize unaffected SG blowdown. It should also be noted that the PO manually throttled total AFW flow to the unaffected SGs to about 365 GPM (per procedure) which is the minimum acceptable AFW flow to provide an adequate heat sink. This action extended SG refill time to its maximum limit. All other cases would be bounded by this feed flow value.

In conclusion, both objectives were met with considerable margin and appropriate conservative assumptions.

I will maintain the original data in the appropriate EOP history file. If you have any questions about this information, please call me at X4935.

CO/lmg

cc: G. E. Storolis
R. M. Vento
A. H. Brunner
F. J. Schaffner
M. P. Flynn
T. W. Burns
R. N. Ireland
T. W. Bean
J. T. Lebda
T. M. McGhee
L. G. Schad
K. J. Winter

Control Room Ventilation Flow and Timing Parameters

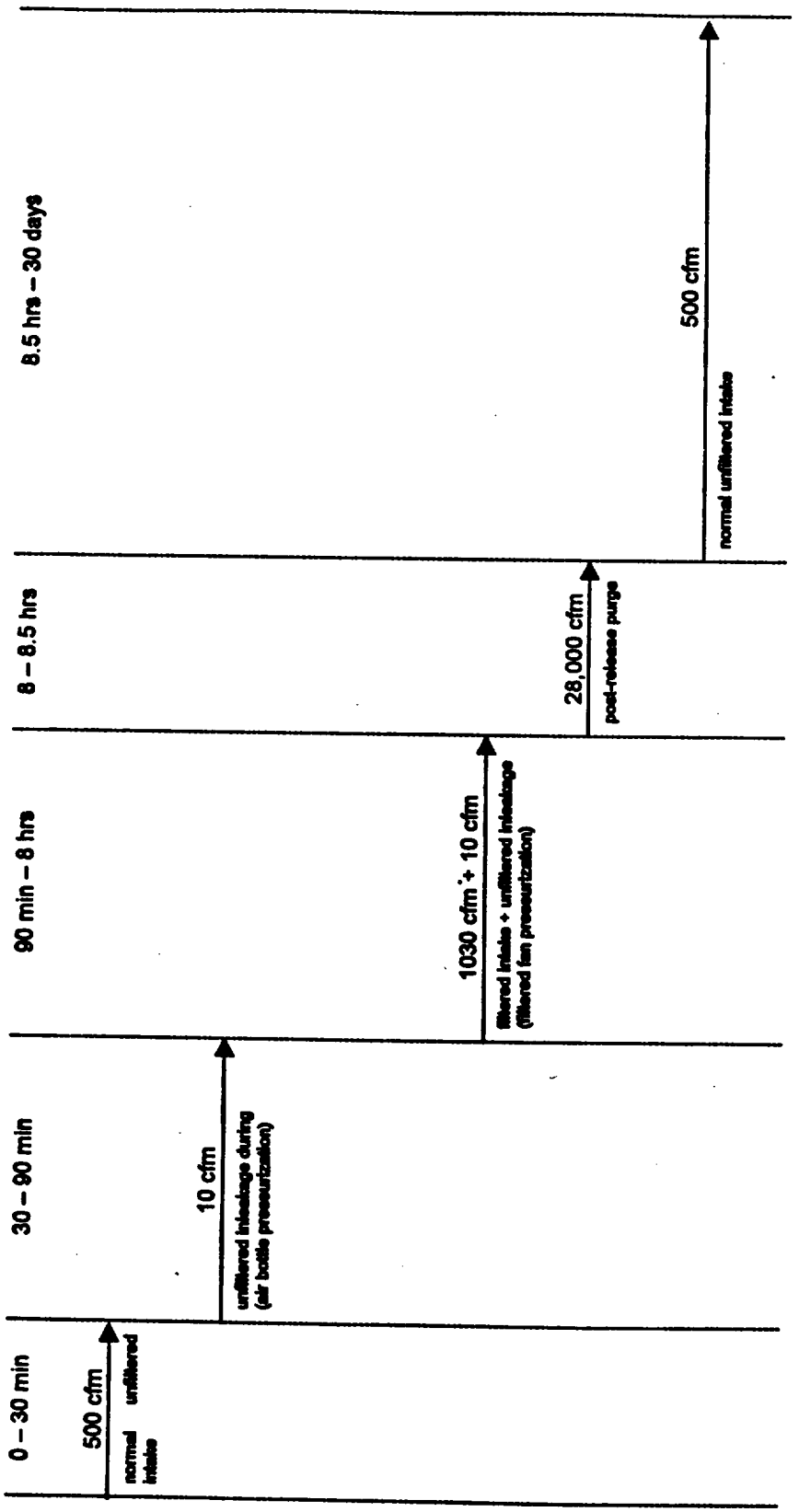

TRAILSPC Input File For ASA Case

```
'L1 ',9,1.0E-3,3.47E-4,1.0E-5,3.47E-4,1.0,1.0E-3,3.47E-4,1,24,0,2
'ASA - for CR, EAB & LPZ dose (SA Case 2) [sa2ASA.in] (1/01) '
'C1 ','not used ',0.0 ,0.0,0.0,0.0
'C2 ','all S/Gs ',13.816,0.0,0.0,0.0
'CR ',1.73E5 ,10.,10.,0.0,0.960,0.0
'PRD',24*0.0
'PRD',24*0.0
'INI',1.0,' ',24*0.0
'INI',3.0,'uCi',5.32E-1,1.55E0,1.65E2,1.05E0,2.92E0,8.48E-2,0.0,
5.32E0,4.47E0,3.30E2,7.10E0,1.18E1,2.10E-1,7.19E-1,
1.21E3,1.94E2,1.32E3,2.54E1,4.59E2,5*0.0
'INI',1.0,' ',24*0.0
'TIM',1800.,5400.,7200.,14400.,28800.,30600.,86400.,3.456E5,2.592E6
'XPR',9*0.0
'XPR',9*0.0
'XPR',50.0,1.0,3*104.,2800.,3*50.
'XRM',9*0.0
'XRM',1.0,8*0.0
'XRM',50.0,1.0,3*104.,2800.,3*50.
'XRF',9*0.0
'XRF',9*0.0
'XRF',2*0.0,3*1.0,4*0.0
'XOQEB',3*1.04,6*0.0
'XBREB',3*1.0,6*0.0
'XOQLZ',5*6.04,2*4.33,2.10,0.744
'XBRLZ',9*1.0
'XOQ',5*2.43,2*1.22,0.890,0.626
'XBR',9*1.0
'OCC',7*1.0,0.6,0.4
```

TRAILS_PC -- Transport of Radioactive Material in Linear Systems, V1.0a
ASA - for CR, EAB & LPZ dose (SA Case 2) (sa2ASA.in) (1/01) ***PROGENY INGROWTH ON ***

	COMP: not used	COMP: all S/Gs	COMP: Control Room VOLUME: 1.730E+05 Cu.Ft.
INITIAL:	0.000E+00 Kr-83m	5.320E-01 Kr-83m uCi	0.000E+00 Kr-83m
	0.000E+00 Kr-85m	1.550E+00 Kr-85m	0.000E+00 Kr-85m
	0.000E+00 Kr-85	1.650E+02 Kr-85	0.000E+00 Kr-85
	0.000E+00 Kr-87	1.050E+00 Kr-87	0.000E+00 Kr-87
	0.000E+00 Kr-88	2.920E+00 Kr-88	0.000E+00 Kr-88
	0.000E+00 Kr-89	8.480E-02 Kr-89	0.000E+00 Kr-89
	0.000E+00 Xe-131m	5.320E+00 Xe-131m	0.000E+00 Xe-131m
	0.000E+00 Xe-133m	4.470E+00 Xe-133m	0.000E+00 Xe-133m
	0.000E+00 Xe-133	3.300E+02 Xe-133	0.000E+00 Xe-133
	0.000E+00 Xe-135m	7.100E+00 Xe-135m	0.000E+00 Xe-135m
	0.000E+00 Xe-135	1.180E+01 Xe-135	0.000E+00 Xe-135
	0.000E+00 Xe-137	2.100E-01 Xe-137	0.000E+00 Xe-137
	0.000E+00 Xe-138	7.190E-01 Xe-138	0.000E+00 Xe-138
	0.000E+00 I-131	1.210E+03 I-131	0.000E+00 I-131
	0.000E+00 I-132	1.940E+02 I-132	0.000E+00 I-132
	0.000E+00 I-133	1.320E+03 I-133	0.000E+00 I-133
	0.000E+00 I-134	2.540E+01 I-134	0.000E+00 I-134
	0.000E+00 I-135	4.590E+02 I-135	0.000E+00 I-135
ACT MULT (to uCi):	1.000E+00	3.000E+00	1.000E+00

TRAILS_PC -- Transport of Radioactive Material in Linear Systems, v1.0a
ASA - for CR, EAB & LPZ dose (SA Case 2) [sa2ASA.in] (1/01) ***PROGENY INGROWTH ON ***

REMOVAL:	0.000E+00 1/sec	1.382E+01 1/sec	1.000E+01 cfm
NUC Grp 1 REL FR:	0.000E+00	0.000E+00	INTAKE REDUCT: 0.000E+00
NUC Grp 2 REL FR:	0.000E+00	0.000E+00	INTAKE REDUCT: 9.600E-01
NUC Grp 3 REL FR:	0.000E+00	0.000E+00	INTAKE REDUCT: 0.000E+00

MULTIPLIERS====>

STEP	TIME	XPR	XREM	XRF	XPR	XREM	XRF	XPR	XREM	XRF
1	1.800E+03	0.00	0.00	0.00	0.00	1.00	0.00	50.0	50.0	0.00
2	5.400E+03	0.00	0.00	0.00	0.00	0.00	0.00	1.00	1.00	0.00
3	7.200E+03	0.00	0.00	0.00	0.00	0.00	0.00	104.	104.	1.00
4	1.440E+04	0.00	0.00	0.00	0.00	0.00	0.00	104.	104.	1.00
5	2.880E+04	0.00	0.00	0.00	0.00	0.00	0.00	104.	104.	1.00
6	3.060E+04	0.00	0.00	0.00	0.00	0.00	0.00	2.800E+03	2.800E+03	0.00
7	8.640E+04	0.00	0.00	0.00	0.00	0.00	0.00	50.0	50.0	0.00
8	3.456E+05	0.00	0.00	0.00	0.00	0.00	0.00	50.0	50.0	0.00
9	2.592E+06	0.00	0.00	0.00	0.00	0.00	0.00	50.0	50.0	0.00

	-------- CONTROL ROOM --------			--- EXCLUSION AREA BOUNDARY ---		--- LOW POPULATION ZONE ---	
	X/Q s/M3	Breathing M3/s	Occupancy	X/Q s/M3	Breathing M3/s	X/Q s/M3	Breathing M3/s
	1.000E-03	3.470E-04	1.000E+00	1.000E-03	3.470E-04	1.000E-05	3.470E-04

MULTIPLIERS====>

STEP	TIME,s						
1	1.800E+03	2.43	1.00	1.00	1.04	1.00	6.04	1.00
2	5.400E+03	2.43	1.00	1.00	1.04	1.00	6.04	1.00
3	7.200E+03	2.43	1.00	1.00	1.04	1.00	6.04	1.00
4	1.440E+04	2.43	1.00	1.00	0.00	0.00	6.04	1.00
5	2.880E+04	2.43	1.00	1.00	0.00	0.00	6.04	1.00
6	3.060E+04	1.22	1.00	1.00	0.00	0.00	4.33	1.00
7	8.640E+04	1.22	1.00	1.00	0.00	0.00	4.33	1.00
8	3.456E+05	0.890	1.00	0.600	0.00	0.00	2.10	1.00
9	2.592E+06	0.626	1.00	0.400	0.00	0.00	0.744	1.00

TRAILS_PC -- Transport of Radioactive Material in Linear Systems, v1.0a
ASA - for CR, EAB & LPZ dose (SA Case 2) [sa2ASA.in] (1/01) ***PROGENY INGROWTH ON ***

STEP	TIME	not used CURRENT uCi	INTEGRD uCi-sec	all S/Gs CURRENT uCi	INTEGRD uCi-sec	AVERAGE RELEASED uCi	AVERAGE RELEASE uCi/sec	CONTROL ROOM CURRENT uCi	CONTROL ROOM CURRENT uCi/cc	CONTROL ROOM INTEGRD uCi-sec
Kr-83m	INITIAL	0.000E+00		1.596E+00				0.000E+00		
Kr-83m	TOTALS		0.000E+00		1.155E-01	1.596E+00				5.782E+00
Kr-85m	INITIAL	0.000E+00		4.650E+00				0.000E+00		
Kr-85m	TOTALS		0.000E+00		3.366E-01	4.650E+00				2.464E+01
Kr-85	INITIAL	0.000E+00		4.950E+02				0.000E+00		
Kr-85	TOTALS		0.000E+00		3.583E+01	4.950E+02				3.684E+03
Kr-87	INITIAL	0.000E+00		3.150E+00				0.000E+00		
Kr-87	TOTALS		0.000E+00		2.280E-01	3.150E+00				9.128E+00
Kr-88	INITIAL	0.000E+00		8.760E+00				0.000E+00		
Kr-88	TOTALS		0.000E+00		6.340E-01	8.760E+00				3.936E+01
Kr-89	INITIAL	0.000E+00		2.544E-01				0.000E+00		
Kr-89	TOTALS		0.000E+00		1.841E-02	2.543E-01				3.945E-02
Xe-131m	INITIAL	0.000E+00		1.596E+01				0.000E+00		
Xe-131m	TOTALS		0.000E+00		1.155E+00	1.596E+01				1.198E+02
Xe-133m	INITIAL	0.000E+00		1.341E+01				0.000E+00		
Xe-133m	TOTALS		0.000E+00		9.706E-01	1.341E+01				1.217E+02
Xe-133	INITIAL	0.000E+00		9.900E+02				0.000E+00		
Xe-133	TOTALS		0.000E+00		7.166E+01	9.900E+02				7.630E+03
Xe-135m	INITIAL	0.000E+00		2.130E+01				0.000E+00		
Xe-135m	TOTALS		0.000E+00		1.543E+00	2.131E+01				1.228E+03
Xe-135	INITIAL	0.000E+00		3.540E+01				0.000E+00		
Xe-135	TOTALS		0.000E+00		2.562E+00	3.540E+01				1.557E+03
Xe-137	INITIAL	0.000E+00		6.300E-01				0.000E+00		
Xe-137	TOTALS		0.000E+00		4.559E-02	6.299E-01				1.182E-01
Xe-138	INITIAL	0.000E+00		2.157E+00				0.000E+00		
Xe-138	TOTALS		0.000E+00		1.561E-01	2.157E+00				1.466E+00
I-131	INITIAL	0.000E+00		3.630E+03				0.000E+00		
I-131	TOTALS		0.000E+00		2.627E+02	3.630E+03				2.678E+04

TRAILS_PC -- Transport of Radioactive Material in Linear Systems, v1.0a
ASA - for CR, EAB & LPZ dose (SA Case 2) [sa2ASA.in] (1/01)

***PROGENY INGROWTH ON ***

STEP	TIME	not used CURRENT uCi	INTEGRD uCi-sec	all S/Gs CURRENT uCi	INTEGRD uCi-sec	RELEASED uCi	AVERAGE RELEASE uCi/sec	CONTROL ROOM CURRENT uCi	CONTROL ROOM CURRENT uCi/cc	CONTROL ROOM INTEGRD uCi-sec
I-132	INITIAL	0.000E+00		5.820E+02				0.000E+00		
I-132	TOTALS		0.000E+00		4.212E+01	5.820E+02				2.376E+03
I-133	INITIAL	0.000E+00		3.960E+03				0.000E+00		
I-133	TOTALS		0.000E+00		2.866E+02	3.960E+03				2.721E+04
I-134	INITIAL	0.000E+00		7.620E+01				0.000E+00		
I-134	TOTALS		0.000E+00		5.515E+00	7.620E+01				1.688E+02
I-135	INITIAL	0.000E+00		1.377E+03				0.000E+00		
I-135	TOTALS		0.000E+00		9.967E+01	1.377E+03				8.075E+03

TRAILS_PC -- Transport of Radioactive Material in Linear Systems, v1.0a
ASA - for CR, EAB & LPZ dose (SA Case 2) [sa2ASA.in] (1/01)

***PROGENY INGROWTH ON ***

	- EXCLUSION AREA BOUNDARY -			--- LOW POPULATION ZONE ---			---------- CONTROL ROOM ----------			
	EDE DOSE mrem	SKIN-DE DOSE mrem	THY-CDE DOSE mrem	EDE DOSE mrem	SKIN-DE DOSE mrem	THY-CDE DOSE mrem	EDE DOSE mrem	EDE RATE DOSE RATE mrem/h	SKIN-DE DOSE mrem	THY-CDE DOSE mrem
Kr-83m TOTALS	2.47E-11	0.00E+00	0.00E+00	1.43E-12	0.00E+00	0.00E+00	8.81E-13		0.00E+00	0.00E+00
Kr-85m TOTALS	1.25E-07	2.47E-07	0.00E+00	7.27E-09	1.44E-08	0.00E+00	6.54E-09		2.57E-07	0.00E+00
Kr-85 TOTALS	1.83E-07	2.56E-05	0.00E+00	1.06E-08	1.49E-06	0.00E+00	1.34E-08		3.74E-05	0.00E+00
Kr-87 TOTALS	4.64E-07	1.10E-06	0.00E+00	2.70E-08	6.40E-08	0.00E+00	1.33E-08		6.26E-07	0.00E+00
Kr-88 TOTALS	3.26E-06	7.19E-07	0.00E+00	1.90E-07	4.17E-08	0.00E+00	1.45E-07		6.34E-07	0.00E+00
Kr-89 TOTALS	8.52E-08	9.26E-08	0.00E+00	4.95E-09	5.38E-09	0.00E+00	1.30E-10		2.82E-09	0.00E+00
Xe-131m TOTALS	2.25E-08	2.50E-07	0.00E+00	1.31E-09	1.45E-08	0.00E+00	1.67E-09		3.68E-07	0.00E+00
Xe-133m TOTALS	6.59E-08	4.38E-07	0.00E+00	3.83E-09	2.54E-08	0.00E+00	5.90E-09		7.80E-07	0.00E+00
Xe-133 TOTALS	5.75E-06	1.09E-05	0.00E+00	3.34E-07	6.31E-07	0.00E+00	4.37E-07		1.64E-05	0.00E+00
Xe-135m TOTALS	1.51E-06	4.80E-07	0.00E+00	8.76E-08	2.79E-08	0.00E+00	8.57E-07		5.42E-06	0.00E+00
Xe-135 TOTALS	1.46E-06	2.38E-06	0.00E+00	8.49E-08	1.38E-07	0.00E+00	6.34E-07		2.06E-05	0.00E+00
Xe-137 TOTALS	1.98E-08	3.00E-07	0.00E+00	1.15E-09	1.74E-08	0.00E+00	3.67E-11		1.11E-08	0.00E+00
Xe-138 TOTALS	4.46E-07	3.32E-07	0.00E+00	2.59E-08	1.93E-08	0.00E+00	2.99E-09		4.42E-08	0.00E+00
I-131 TOTALS	2.29E-04	1.21E-04	1.41E+00	1.33E-05	7.00E-06	8.22E-02	1.66E-05		1.75E-04	2.05E+00

TRAILS_PC -- Transport of Radioactive Material in Linear Systems, v1.0a
ASA - for CR, EAB & LPZ dose (SA Case 2) [sa2ASA.in] (1/01)

***PROGENY INGROWTH ON ***

	- EXCLUSION AREA BOUNDARY -			--- LOW POPULATION ZONE ---			---------- CONTROL ROOM ----------			
	EDE DOSE mrem	SKIN-DE DOSE mrem	THY-CDE DOSE mrem	EDE DOSE mrem	SKIN-DE DOSE mrem	THY-CDE DOSE mrem	EDE DOSE mrem	EDE RATE DOSE RATE mrem/h	SKIN-DE DOSE mrem	THY-CDE DOSE mrem
I-132										
TOTALS	2.29E-04	6.76E-05	1.35E-03	1.33E-05	3.93E-06	7.86E-05	9.21E-06		5.42E-05	1.08E-03
I-133										
TOTALS	4.00E-04	3.72E-04	2.57E-01	2.33E-05	2.16E-05	1.49E-02	2.71E-05		5.01E-04	3.47E-01
I-134										
TOTALS	3.46E-05	1.14E-05	2.94E-05	2.01E-06	6.60E-07	1.71E-06	7.55E-07		4.94E-06	1.28E-05
I-135										
TOTALS	3.79E-04	1.15E-04	1.56E-02	2.20E-05	6.65E-06	9.03E-04	2.19E-05		1.32E-04	1.79E-02
ALL NUCLIDES										
0.5000 h	1.28E-03	7.29E-04	1.69E+00	7.46E-05	4.23E-05	9.81E-02	6.26E-06	2.45E-05	7.11E-05	1.66E-01
1.5000 h	0.00E+00	0.00E+00	0.00E+00	0.00E+00	0.00E+00	0.00E+00	2.33E-05	2.22E-05	2.71E-04	6.50E-01
2.0000 h	0.00E+00	0.00E+00	0.00E+00	0.00E+00	0.00E+00	0.00E+00	9.95E-06	1.78E-05	1.19E-04	2.95E-01
4.0000 h	0.00E+00	0.00E+00	0.00E+00	0.00E+00	0.00E+00	0.00E+00	2.36E-05	7.43E-06	2.94E-04	7.59E-01
8.0000 h	0.00E+00	0.00E+00	0.00E+00	0.00E+00	0.00E+00	0.00E+00	1.44E-05	1.41E-06	1.92E-04	5.36E-01
8.5000 h	0.00E+00	0.00E+00	0.00E+00	0.00E+00	0.00E+00	0.00E+00	1.43E-07	1.07E-08	2.01E-06	5.99E-03
24.0000 h	0.00E+00	0.00E+00	0.00E+00	0.00E+00	0.00E+00	0.00E+00	4.86E-08	4.38E-10	7.17E-07	2.37E-03
96.0000 h	0.00E+00	0.00E+00	0.00E+00	0.00E+00	0.00E+00	0.00E+00	1.35E-09	6.90E-16	2.12E-08	9.32E-05
720.0000 h	0.00E+00	0.00E+00	0.00E+00	0.00E+00	0.00E+00	0.00E+00	1.54E-15	0.00E+00	2.30E-14	1.70E-10
TOTALS	1.28E-03	7.29E-04	1.69E+00	7.46E-05	4.23E-05	9.81E-02	7.78E-05		9.50E-04	2.41E+00

TRAILSPC Input File For FLI Case

```
'L1 ',9,1.0E-3,3.47E-4,1.0E-5,3.47E-4,1.0,1.0E-3,3.47E-4,1,24,0,2
'FLI - for CR, EAB & LPZ Dose  (SA Case 2) [sa2FLI.in] (1/01) '
'C1 ','not used ',0.0 ,0.0,0.0,0.0
'C2 ','faulted S/G ',7.6753E-3,0.0,0.0,0.0
'CR ',1.73E5 ,10.,10.,0.0,0.960,0.0
'PRD',24*0.0
'PRD',24*0.0
'INI',1.0,' ',24*0.0
'INI',1.0,'uCi',14*0.0,3.10E6,4.98E5,3.37E6,6.52E4,1.18E6,5*0.0
'INI',1.0,' ',24*0.0
'TIM',1800.,5400.,7200.,14400.,28800.,30600.,86400.,3.456E5,2.592E6
'XPR',9*0.0
'XPR',9*0.0
'XPR',50.0,1.0,3*104.,2800.,3*50.
'XRM',9*0.0
'XRM',5*1.0,4*0.0
'XRM',50.0,1.0,3*104.,2800.,3*50.
'XRF',9*0.0
'XRF',9*0.0
'XRF',2*0.0,3*1.0,4*0.0
'XOQEB',3*1.04,6*0.0
'XBREB',3*1.0,6*0.0
'XOQLZ',5*6.04,2*4.33,2.10,0.744
'XBRLZ',9*1.0
'XOQ',5*2.43,2*1.22,0.890,0.626
'XBR',9*1.0
'OCC',7*1.0,0.6,0.4
```

TRAILS_PC -- Transport of Radioactive Material in Linear Systems, V1.0a
FLI - for CR, EAB & LPZ Dose (SA Case 2) [sa2FLI.in] (1/01) ***PROGENY INGROWTH ON ***

	COMP: not used	COMP: faulted S/G		COMP: Control Room VOLUME: 1.730E+05 Cu.Ft.
INITIAL:	0.000E+00 I-131	3.100E+06 I-131	uCi	0.000E+00 I-131
	0.000E+00 I-132	4.980E+05 I-132		0.000E+00 I-132
	0.000E+00 I-133	3.370E+06 I-133		0.000E+00 I-133
	0.000E+00 I-134	6.520E+04 I-134		0.000E+00 I-134
	0.000E+00 I-135	1.180E+06 I-135		0.000E+00 I-135
ACT MULT (to uCi):	1.000E+00	1.000E+00		1.000E+00

TRAILS_PC -- Transport of Radioactive Material in Linear Systems, v1.0a
FLI - for CR, EAB & LPZ Dose (SA Case 2) [sa2FLI.in] (1/01) ***PROGENY INGROWTH ON ***

REMOVAL:	0.000E+00 1/sec	7.675E-03 1/sec	1.000E+01 cfm
NUC Grp 1 REL FR:	0.000E+00	0.000E+00	INTAKE REDUCT: 0.000E+00
NUC Grp 2 REL FR:	0.000E+00	0.000E+00	INTAKE REDUCT: 9.600E-01
NUC Grp 3 REL FR:	0.000E+00	0.000E+00	INTAKE REDUCT: 0.000E+00

MULTIPLIERS====>

STEP	TIME	XPR	XREM	XRF	XPR	XREM	XRF	XPR	XREM	XRF
1	1.800E+03	0.00	0.00	0.00	0.00	1.00	0.00	50.0	50.0	0.00
2	5.400E+03	0.00	0.00	0.00	0.00	1.00	0.00	1.00	1.00	0.00
3	7.200E+03	0.00	0.00	0.00	0.00	1.00	0.00	104.	104.	1.00
4	1.440E+04	0.00	0.00	0.00	0.00	1.00	0.00	104.	104.	1.00
5	2.880E+04	0.00	0.00	0.00	0.00	1.00	0.00	104.	104.	1.00
6	3.060E+04	0.00	0.00	0.00	0.00	0.00	0.00	2.800E+03	2.800E+03	0.00
7	8.640E+04	0.00	0.00	0.00	0.00	0.00	0.00	50.0	50.0	0.00
8	3.456E+05	0.00	0.00	0.00	0.00	0.00	0.00	50.0	50.0	0.00
9	2.592E+06	0.00	0.00	0.00	0.00	0.00	0.00	50.0	50.0	0.00

	CONTROL ROOM			EXCLUSION AREA BOUNDARY		LOW POPULATION ZONE	
	X/Q s/M3	Breathing M3/s	Occupancy	X/Q s/M3	Breathing M3/s	X/Q s/M3	Breathing M3/s
	1.000E-03	3.470E-04	1.000E+00	1.000E-03	3.470E-04	1.000E-05	3.470E-04

MULTIPLIERS====>

STEP	TIME,s							
1	1.800E+03	2.43	1.00	1.00	1.04	1.00	6.04	1.00
2	5.400E+03	2.43	1.00	1.00	1.04	1.00	6.04	1.00
3	7.200E+03	2.43	1.00	1.00	1.04	1.00	6.04	1.00
4	1.440E+04	2.43	1.00	1.00	0.00	0.00	6.04	1.00
5	2.880E+04	2.43	1.00	1.00	0.00	0.00	6.04	1.00
6	3.060E+04	1.22	1.00	1.00	0.00	0.00	4.33	1.00
7	8.640E+04	1.22	1.00	1.00	0.00	0.00	4.33	1.00
8	3.456E+05	0.890	1.00	0.600	0.00	0.00	2.10	1.00
9	2.592E+06	0.626	1.00	0.400	0.00	0.00	0.744	1.00

TRAILS_PC -- Transport of Radioactive Material in Linear Systems, v1.0a
FLI - for CR, EAB & LPZ Dose (SA Case 2) [sa2FLI.in] (1/01) ***PROGENY INGROWTH ON ***

STEP	TIME	not used CURRENT uCi	INTEGRD uCi-sec	faulted S/G CURRENT uCi	INTEGRD uCi-sec	AVERAGE RELEASED uCi	AVERAGE RELEASE uCi/sec	CONTROL ROOM CURRENT uCi	CONTROL ROOM CURRENT uCi/cc	CONTROL ROOM INTEGRD uCi-sec
Xe-131m	INITIAL	0.000E+00		0.000E+00				0.000E+00		
Xe-131m	TOTALS		0.000E+00		3.886E+02	2.982E+00				1.510E+03
Xe-133m	INITIAL	0.000E+00		0.000E+00				0.000E+00		
Xe-133m	TOTALS		0.000E+00		6.025E+03	4.625E+01				2.166E+04
Xe-133	INITIAL	0.000E+00		0.000E+00				0.000E+00		
Xe-133	TOTALS		0.000E+00		8.486E+04	6.514E+02				3.099E+05
Xe-135m	INITIAL	0.000E+00		0.000E+00				0.000E+00		
Xe-135m	TOTALS		0.000E+00		2.255E+06	1.731E+04				1.047E+06
Xe-135	INITIAL	0.000E+00		0.000E+00				0.000E+00		
Xe-135	TOTALS		0.000E+00		3.574E+05	2.743E+03				1.157E+06
I-131	INITIAL	0.000E+00		3.100E+06				0.000E+00		
I-131	TOTALS		0.000E+00		4.038E+08	3.100E+06				2.287E+07
I-132	INITIAL	0.000E+00		4.980E+05				0.000E+00		
I-132	TOTALS		0.000E+00		6.418E+07	4.926E+05				2.011E+06
I-133	INITIAL	0.000E+00		3.370E+06				0.000E+00		
I-133	TOTALS		0.000E+00		4.385E+08	3.366E+06				2.313E+07
I-134	INITIAL	0.000E+00		6.520E+04				0.000E+00		
I-134	TOTALS		0.000E+00		8.258E+06	6.339E+04				1.404E+05
I-135	INITIAL	0.000E+00		1.180E+06				0.000E+00		
I-135	TOTALS		0.000E+00		1.532E+08	1.176E+06				6.894E+06

TRAILS_PC -- Transport of Radioactive Material in Linear Systems, v1.0a
FLI - for CR, EAB & LPZ Dose (SA Case 2) [sa2FLI.in] (1/01)

***PROGENY INGROWTH ON ***

	- EXCLUSION AREA BOUNDARY -			--- LOW POPULATION ZONE ---			---------- CONTROL ROOM ----------			
	EDE DOSE mrem	SKIN-DE DOSE mrem	THY-CDE DOSE mrem	EDE DOSE mrem	SKIN-DE DOSE mrem	THY-CDE DOSE mrem	EDE DOSE mrem	EDE RATE DOSE RATE mrem/h	SKIN-DE DOSE mrem	THY-CDE DOSE mrem
Xe-131m TOTALS	4.21E-09	4.67E-08	0.00E+00	2.45E-10	2.71E-09	0.00E+00	2.10E-08		4.64E-06	0.00E+00
Xe-133m TOTALS	2.27E-07	1.51E-06	0.00E+00	1.32E-08	8.77E-08	0.00E+00	1.05E-06		1.39E-04	0.00E+00
Xe-133 TOTALS	3.78E-06	7.15E-06	0.00E+00	2.20E-07	4.15E-07	0.00E+00	1.77E-05		6.68E-04	0.00E+00
Xe-135m TOTALS	1.23E-03	3.90E-04	0.00E+00	7.12E-05	2.26E-05	0.00E+00	7.31E-04		4.63E-03	0.00E+00
Xe-135 TOTALS	1.13E-04	1.85E-04	0.00E+00	6.58E-06	1.07E-05	0.00E+00	4.72E-04		1.53E-02	0.00E+00
I-131 TOTALS	1.95E-01	1.03E-01	1.21E+03	1.13E-02	5.98E-03	7.02E+01	1.42E-02		1.49E-01	1.75E+03
I-132 TOTALS	1.94E-01	5.72E-02	1.14E+00	1.12E-02	3.32E-03	6.65E-02	7.79E-03		4.58E-02	9.17E-01
I-133 TOTALS	3.40E-01	3.16E-01	2.19E+02	1.98E-02	1.84E-02	1.27E+01	2.31E-02		4.26E-01	2.95E+02
I-134 TOTALS	2.88E-02	9.45E-03	2.45E-02	1.67E-03	5.49E-04	1.42E-03	6.28E-04		4.11E-03	1.06E-02
I-135 TOTALS	3.23E-01	9.78E-02	1.33E+01	1.88E-02	5.68E-03	7.71E-01	1.87E-02		1.13E-01	1.53E+01
ALL NUCLIDES										
0.5000 h	1.08E+00	5.84E-01	1.44E+03	6.29E-02	3.39E-02	8.37E+01	5.28E-03	2.07E-02	5.70E-02	1.42E+02
1.5000 h	1.03E-06	5.68E-07	1.43E-03	6.01E-08	3.30E-08	8.33E-05	1.97E-02	1.87E-02	2.17E-01	5.55E+02
2.0000 h	9.43E-19	5.38E-19	1.42E-15	5.48E-20	3.12E-20	8.26E-17	8.40E-03	1.50E-02	9.52E-02	2.52E+02
4.0000 h	0.00E+00	0.00E+00	0.00E+00	5.25E-26	3.05E-26	8.22E-23	2.00E-02	6.27E-03	2.35E-01	6.48E+02
8.0000 h	0.00E+00	0.00E+00	0.00E+00	0.00E+00	0.00E+00	0.00E+00	1.21E-02	1.19E-03	1.52E-01	4.58E+02
8.5000 h	0.00E+00	0.00E+00	0.00E+00	0.00E+00	0.00E+00	0.00E+00	1.21E-04	9.02E-06	1.59E-03	5.11E+00
24.0000 h	0.00E+00	0.00E+00	0.00E+00	0.00E+00	0.00E+00	0.00E+00	4.10E-05	3.69E-07	5.62E-04	2.02E+00
96.0000 h	0.00E+00	0.00E+00	0.00E+00	0.00E+00	0.00E+00	0.00E+00	1.14E-06	5.77E-13	1.60E-05	7.96E-02
720.0000 h	0.00E+00	0.00E+00	0.00E+00	0.00E+00	0.00E+00	0.00E+00	1.29E-12	0.00E+00	1.49E-11	1.45E-07
TOTALS	1.08E+00	5.84E-01	1.44E+03	6.29E-02	3.39E-02	8.37E+01	6.56E-02		7.59E-01	2.06E+03

TRAILSPC Input File For ILI Case

```
'L1 ',9,1.0E-3,3.47E-4,1.0E-5,3.47E-4,1.0,1.0E-3,3.47E-4,1,24,0,2
'ILI - for CR, EAB & LPZ dose ( SA Case 2) [sa2ILI.in] (1/01) '
'C1 ','not used ',0.0 ,0.0,0.0,0.0
'C2 ','intact S/Gs ',1.43555E-6,0.0,0.0,0.0
'CR ',1.73E5 ,10.,10.,0.0,0.960,0.0
'PRD',24*0.0
'PRD',24*0.0
'INI',1.0,' ',24*0.0
'INI',2.0,'uCi',14*0.0,3.10E6,4.98E5,3.37E6,6.52E4,1.18E6,5*0.0
'INI',1.0,' ',24*0.0
'TIM',1800.,5400.,7200.,14400.,28800.,30600.,86400.,3.456E5,2.592E6
'XPR',9*0.0
'XPR',9*0.0
'XPR',50.0,1.0,3*104.,2800.,3*50.
'XRM',9*0.0
'XRM',3*1.0,2*0.698182,4*0.0
'XRM',50.0,1.0,3*104.,2800.,3*50.
'XRF',9*0.0
'XRF',9*0.0
'XRF',2*0.0,3*1.0,4*0.0
'XOQEB',3*1.04,6*0.0
'XBREB',3*1.0,6*0.0
'XOQLZ',5*6.04,2*4.33,2.10,0.744
'XBRLZ',9*1.0
'XOQ',5*2.43,2*1.22,0.890,0.626
'XBR',9*1.0
'OCC',7*1.0,0.6,0.4
```

TRAILS_PC -- Transport of Radioactive Material in Linear Systems, V1.0a
ILI - for CR, EAB & LPZ dose (SA Case 2) [sa2ILI.in] (1/01)

***PROGENY INGROWTH ON ***

	COMP: not used	COMP: intact S/Gs		COMP: Control Room VOLUME: 1.730E+05 Cu.Ft.
INITIAL:	0.000E+00 I-131	3.100E+06 I-131	uCi	0.000E+00 I-131
	0.000E+00 I-132	4.980E+05 I-132		0.000E+00 I-132
	0.000E+00 I-133	3.370E+06 I-133		0.000E+00 I-133
	0.000E+00 I-134	6.520E+04 I-134		0.000E+00 I-134
	0.000E+00 I-135	1.180E+06 I-135		0.000E+00 I-135
ACT MULT (to uCi):	1.000E+00	2.000E+00		1.000E+00

TRAILS_PC -- Transport of Radioactive Material in Linear Systems, v1.0a
ILI - for CR, EAB & LPZ dose (SA Case 2) [sa2ILI.in] (1/01) ***PROGENY INGROWTH ON ***

REMOVAL:	0.000E+00 1/sec	1.436E-06 1/sec	1.000E+01 cfm
NUC Grp 1 REL FR:	0.000E+00	0.000E+00	INTAKE REDUCT: 0.000E+00
NUC Grp 2 REL FR:	0.000E+00	0.000E+00	INTAKE REDUCT: 9.600E-01
NUC Grp 3 REL FR:	0.000E+00	0.000E+00	INTAKE REDUCT: 0.000E+00

MULTIPLIERS====>

STEP	TIME	XPR	XREM	XRF	XPR	XREM	XRF	XPR	XREM	XRF
1	1.800E+03	0.00	0.00	0.00	0.00	1.00	0.00	50.0	50.0	0.00
2	5.400E+03	0.00	0.00	0.00	0.00	1.00	0.00	1.00	1.00	0.00
3	7.200E+03	0.00	0.00	0.00	0.00	1.00	0.00	104.	104.	1.00
4	1.440E+04	0.00	0.00	0.00	0.00	0.698	0.00	104.	104.	1.00
5	2.880E+04	0.00	0.00	0.00	0.00	0.698	0.00	104.	104.	1.00
6	3.060E+04	0.00	0.00	0.00	0.00	0.00	0.00	2.800E+03	2.800E+03	0.00
7	8.640E+04	0.00	0.00	0.00	0.00	0.00	0.00	50.0	50.0	0.00
8	3.456E+05	0.00	0.00	0.00	0.00	0.00	0.00	50.0	50.0	0.00
9	2.592E+06	0.00	0.00	0.00	0.00	0.00	0.00	50.0	50.0	0.00

	CONTROL ROOM			EXCLUSION AREA BOUNDARY		LOW POPULATION ZONE	
	X/Q s/M3	Breathing M3/s	Occupancy	X/Q s/M3	Breathing M3/s	X/Q s/M3	Breathing M3/s
	1.000E-03	3.470E-04	1.000E+00	1.000E-03	3.470E-04	1.000E-05	3.470E-04

MULTIPLIERS====>

STEP	TIME,s							
1	1.800E+03	2.43	1.00	1.00	1.04	1.00	6.04	1.00
2	5.400E+03	2.43	1.00	1.00	1.04	1.00	6.04	1.00
3	7.200E+03	2.43	1.00	1.00	1.04	1.00	6.04	1.00
4	1.440E+04	2.43	1.00	1.00	0.00	0.00	6.04	1.00
5	2.880E+04	2.43	1.00	1.00	0.00	0.00	6.04	1.00
6	3.060E+04	1.22	1.00	1.00	0.00	0.00	4.33	1.00
7	8.640E+04	1.22	1.00	1.00	0.00	0.00	4.33	1.00
8	3.456E+05	0.890	1.00	0.600	0.00	0.00	2.10	1.00
9	2.592E+06	0.626	1.00	0.400	0.00	0.00	0.744	1.00

TRAILS_PC -- Transport of Radioactive Material in Linear Systems, v1.0a
ILI - for CR, EAB & LPZ dose (SA Case 2) [sa2ILI.in] (1/01)

***PROGENY INGROWTH ON ***

STEP	TIME	not used CURRENT uCi	not used INTEGRD uCi-sec	intact S/Gs CURRENT uCi	intact S/Gs INTEGRD uCi-sec	AVERAGE RELEASED uCi	AVERAGE RELEASE uCi/sec	CONTROL ROOM CURRENT uCi	CONTROL ROOM CURRENT uCi/cc	CONTROL ROOM INTEGRD uCi-sec
Xe-131m	INITIAL	0.000E+00		0.000E+00				0.000E+00		
Xe-131m	TOTALS		0.000E+00		4.075E+10	1.883E+01				1.340E+02
Xe-133m	INITIAL	0.000E+00		0.000E+00				0.000E+00		
Xe-133m	TOTALS		0.000E+00		2.031E+10	2.635E+02				1.856E+03
Xe-133	INITIAL	0.000E+00		0.000E+00				0.000E+00		
Xe-133	TOTALS		0.000E+00		6.889E+11	3.790E+03				2.695E+04
Xe-135m	INITIAL	0.000E+00		0.000E+00				0.000E+00		
Xe-135m	TOTALS		0.000E+00		1.306E+10	8.160E+03				1.523E+04
Xe-135	INITIAL	0.000E+00		0.000E+00				0.000E+00		
Xe-135	TOTALS		0.000E+00		7.860E+10	1.305E+04				8.697E+04
I-131	INITIAL	0.000E+00		6.200E+06				0.000E+00		
I-131	TOTALS		0.000E+00		5.567E+12	1.926E+05				1.661E+05
I-132	INITIAL	0.000E+00		9.960E+05				0.000E+00		
I-132	TOTALS		0.000E+00		1.174E+10	1.305E+04				1.156E+04
I-133	INITIAL	0.000E+00		6.740E+06				0.000E+00		
I-133	TOTALS		0.000E+00		7.078E+11	1.882E+05				1.631E+05
I-134	INITIAL	0.000E+00		1.304E+05				0.000E+00		
I-134	TOTALS		0.000E+00		5.901E+08	7.940E+02				6.582E+02
I-135	INITIAL	0.000E+00		2.360E+06				0.000E+00		
I-135	TOTALS		0.000E+00		7.923E+10	5.203E+04				4.553E+04

TRAILS_PC -- Transport of Radioactive Material in Linear Systems, v1.0a
ILI - for CR, EAB & LPZ dose (SA Case 2) [sa2ILI.in] (1/01)

***PROGENY INGROWTH ON ***

	- EXCLUSION AREA BOUNDARY -			--- LOW POPULATION ZONE ---			---------- CONTROL ROOM ----------			
	EDE DOSE mrem	SKIN-DE DOSE mrem	THY-CDE DOSE mrem	EDE DOSE mrem	SKIN-DE DOSE mrem	THY-CDE DOSE mrem	EDE DOSE mrem	EDE RATE DOSE RATE mrem/h	SKIN-DE DOSE mrem	THY-CDE DOSE mrem
Xe-131m TOTALS	2.38E-09	2.64E-08	0.00E+00	1.54E-09	1.71E-08	0.00E+00	1.87E-09		4.12E-07	0.00E+00
Xe-133m TOTALS	1.25E-07	8.32E-07	0.00E+00	7.52E-08	5.00E-07	0.00E+00	8.99E-08		1.19E-05	0.00E+00
Xe-133 TOTALS	2.09E-06	3.96E-06	0.00E+00	1.28E-06	2.42E-06	0.00E+00	1.54E-06		5.80E-05	0.00E+00
Xe-135m TOTALS	2.12E-04	6.73E-05	0.00E+00	3.35E-05	1.07E-05	0.00E+00	1.06E-05		6.73E-05	0.00E+00
Xe-135 TOTALS	6.43E-05	1.05E-04	0.00E+00	3.13E-05	5.10E-05	0.00E+00	3.54E-05		1.15E-03	0.00E+00
I-131 TOTALS	4.00E-03	2.11E-03	2.48E+01	7.05E-04	3.72E-04	4.36E+00	1.03E-04		1.08E-03	1.27E+01
I-132 TOTALS	3.02E-03	8.94E-04	1.79E-02	2.98E-04	8.81E-05	1.76E-03	4.48E-05		2.63E-04	5.27E-03
I-133 TOTALS	6.78E-03	6.30E-03	4.36E+00	1.11E-03	1.03E-03	7.10E-01	1.63E-04		3.01E-03	2.08E+00
I-134 TOTALS	3.06E-04	1.01E-04	2.60E-04	2.09E-05	6.87E-06	1.78E-05	2.94E-06		1.93E-05	4.99E-05
I-135 TOTALS	6.02E-03	1.82E-03	2.47E-01	8.31E-04	2.51E-04	3.41E-02	1.24E-04		7.43E-04	1.01E-01
ALL NUCLIDES										
0.5000 h	5.48E-03	2.98E-03	7.42E+00	3.18E-04	1.73E-04	4.31E-01	2.67E-05	1.05E-04	2.91E-04	7.30E-01
1.5000 h	1.02E-02	5.69E-03	1.47E+01	5.92E-04	3.31E-04	8.53E-01	1.02E-04	9.89E-05	1.13E-03	2.92E+00
2.0000 h	4.74E-03	2.73E-03	7.27E+00	2.75E-04	1.58E-04	4.22E-01	4.69E-05	8.87E-05	5.39E-04	1.41E+00
4.0000 h	0.00E+00	0.00E+00	0.00E+00	6.96E-04	4.15E-04	1.16E+00	1.38E-04	5.47E-05	1.74E-03	4.33E+00
8.0000 h	0.00E+00	0.00E+00	0.00E+00	1.15E-03	7.32E-04	2.24E+00	1.67E-04	3.45E-05	2.62E-03	5.36E+00
8.5000 h	0.00E+00	0.00E+00	0.00E+00	0.00E+00	0.00E+00	0.00E+00	3.49E-06	2.58E-07	6.14E-05	1.10E-01
24.0000 h	0.00E+00	0.00E+00	0.00E+00	0.00E+00	0.00E+00	0.00E+00	1.13E-06	9.37E-09	2.01E-05	4.36E-02
96.0000 h	0.00E+00	0.00E+00	0.00E+00	0.00E+00	0.00E+00	0.00E+00	2.81E-08	1.30E-14	4.66E-07	1.72E-03
720.0000 h	0.00E+00	0.00E+00	0.00E+00	0.00E+00	0.00E+00	0.00E+00	2.89E-14	0.00E+00	3.66E-13	3.13E-09
TOTALS	2.04E-02	1.14E-02	2.94E+01	3.03E-03	1.81E-03	5.11E+00	4.85E-04		6.40E-03	1.49E+01

TRAILSPC Input File For ITN Case

```
'L1 ',9,1E-3,3.47E-4,1.0E-5,3.47E-4,1.0,1.0E-3,3.47E-4,1,24,0,2
'ITN - for CR, EAB & LPZ dose (SA Case 2) [sa2ITN.in] (1/01) '
'C1 ','not used ',0.0 ,0.0,0.0,0.0
'C2 ','intact S/G ',8.794E-8,0.0,0.0,0.0
'CR ',1.73E5 ,10.,10.,0.0,0.960,0.0
'PRD',24*0.0
'PRD',24*0.0
'INI',1.0,' ',24*0.0
'INI',1.0,'uCi',1.72E6,6.01E6,6.31E8,4.03E6,1.13E7,3.27E5,0.0,
2.05E7,1.71E7,1.27E9,3.91E6,4.21E7,8.05E5,2.76E6,10*0.0
'INI',1.0,' ',24*0.0
'TIM',1800.,5400.,7200.,14400.,28800.,30600.,86400.,3.456E5,2.592E6
'XPR',9*0.0
'XPR',9*0.0
'XPR',50.0,1.0,3*104.,2800.,3*50.
'XRM',9*0.0
'XRM',5*1.0,4*0.0
'XRM',50.0,1.0,3*104.,2800.,3*50.
'XRF',9*0.0
'XRF',9*0.0
'XRF',2*0.0,3*1.0,4*0.0
'XOQ',3*1.04,6*0.0
'XBR',3*1.0,6*0.0
'XOQ',5*6.04,2*4.33,2.10,0.744
'XBR',9*1.0
'XOQ',5*2.43,2*1.22,0.890,0.626
'XBR',9*1.0
'OCC',7*1.0,0.6,0.4
```

TRAILS_PC -- Transport of Radioactive Material in Linear Systems, V1.0a
ITN - for CR, EAB & LPZ dose (SA Case 2) [sa2ITN.in] (1/01) ***PROGENY INGROWTH ON ***

	COMP: not used	COMP: intact S/G	COMP: Control Room VOLUME: 1.730E+05 Cu.Ft.
INITIAL:	0.000E+00 Kr-83m	1.720E+06 Kr-83m uCi	0.000E+00 Kr-83m
	0.000E+00 Kr-85m	6.010E+06 Kr-85m	0.000E+00 Kr-85m
	0.000E+00 Kr-85	6.310E+08 Kr-85	0.000E+00 Kr-85
	0.000E+00 Kr-87	4.030E+06 Kr-87	0.000E+00 Kr-87
	0.000E+00 Kr-88	1.130E+07 Kr-88	0.000E+00 Kr-88
	0.000E+00 Kr-89	3.270E+05 Kr-89	0.000E+00 Kr-89
	0.000E+00 Xe-131m	2.050E+07 Xe-131m	0.000E+00 Xe-131m
	0.000E+00 Xe-133m	1.710E+07 Xe-133m	0.000E+00 Xe-133m
	0.000E+00 Xe-133	1.270E+09 Xe-133	0.000E+00 Xe-133
	0.000E+00 Xe-135m	3.910E+06 Xe-135m	0.000E+00 Xe-135m
	0.000E+00 Xe-135	4.210E+07 Xe-135	0.000E+00 Xe-135
	0.000E+00 Xe-137	8.050E+05 Xe-137	0.000E+00 Xe-137
	0.000E+00 Xe-138	2.760E+06 Xe-138	0.000E+00 Xe-138
ACT MULT (to uCi):	1.000E+00	1.000E+00	1.000E+00

TRAILS_PC -- Transport of Radioactive Material in Linear Systems, v1.0a
ITN - for CR, EAB & LPZ dose (SA Case 2) (sa2ITN.in) (1/01) ***PROGENY INGROWTH ON ***

REMOVAL:	0.000E+00 1/sec	8.794E-08 1/sec	1.000E+01 cfm
NUC Grp 1 REL FR:	0.000E+00	0.000E+00	INTAKE REDUCT: 0.000E+00
NUC Grp 2 REL FR:	0.000E+00	0.000E+00	INTAKE REDUCT: 9.600E-01
NUC Grp 3 REL FR:	0.000E+00	0.000E+00	INTAKE REDUCT: 0.000E+00

MULTIPLIERS====>

STEP	TIME	XPR	XREM	XRF	XPR	XREM	XRF	XPR	XREM	XRF
1	1.800E+03	0.00	0.00	0.00	0.00	1.00	0.00	50.0	50.0	0.00
2	5.400E+03	0.00	0.00	0.00	0.00	1.00	0.00	1.00	1.00	0.00
3	7.200E+03	0.00	0.00	0.00	0.00	1.00	0.00	104.	104.	1.00
4	1.440E+04	0.00	0.00	0.00	0.00	1.00	0.00	104.	104.	1.00
5	2.880E+04	0.00	0.00	0.00	0.00	1.00	0.00	104.	104.	1.00
6	3.060E+04	0.00	0.00	0.00	0.00	0.00	0.00	2.800E+03	2.800E+03	0.00
7	8.640E+04	0.00	0.00	0.00	0.00	0.00	0.00	50.0	50.0	0.00
8	3.456E+05	0.00	0.00	0.00	0.00	0.00	0.00	50.0	50.0	0.00
9	2.592E+06	0.00	0.00	0.00	0.00	0.00	0.00	50.0	50.0	0.00

MULTIPLIERS====>

STEP	TIME,s	CONTROL ROOM X/Q s/M3	CONTROL ROOM Breathing M3/s	CONTROL ROOM Occupancy	EXCLUSION AREA BOUNDARY X/Q s/M3	EXCLUSION AREA BOUNDARY Breathing M3/s	LOW POPULATION ZONE X/Q s/M3	LOW POPULATION ZONE Breathing M3/s
		1.000E-03	3.470E-04	1.000E+00	1.000E-03	3.470E-04	1.000E-05	3.470E-04
1	1.800E+03	2.43	1.00	1.00	1.04	1.00	6.04	1.00
2	5.400E+03	2.43	1.00	1.00	1.04	1.00	6.04	1.00
3	7.200E+03	2.43	1.00	1.00	1.04	1.00	6.04	1.00
4	1.440E+04	2.43	1.00	1.00	0.00	0.00	6.04	1.00
5	2.880E+04	2.43	1.00	1.00	0.00	0.00	6.04	1.00
6	3.060E+04	1.22	1.00	1.00	0.00	0.00	4.33	1.00
7	8.640E+04	1.22	1.00	1.00	0.00	0.00	4.33	1.00
8	3.456E+05	0.890	1.00	0.600	0.00	0.00	2.10	1.00
9	2.592E+06	0.626	1.00	0.400	0.00	0.00	0.744	1.00

TRAILS_PC -- Transport of Radioactive Material in Linear Systems, v1.0a
ITN - for CR, EAB & LPZ dose (SA Case 2) [sa2ITN.in] (1/01) ***PROGENY INGROWTH ON ***

STEP	TIME	not used CURRENT uCi	not used INTEGRD uCi-sec	intact S/G CURRENT uCi	intact S/G INTEGRD uCi-sec	AVERAGE RELEASED uCi	AVERAGE RELEASE uCi/sec	CONTROL ROOM CURRENT uCi	CONTROL ROOM CURRENT uCi/cc	CONTROL ROOM INTEGRD uCi-sec
Kr-83m	INITIAL	0.000E+00		1.720E+06				0.000E+00		
Kr-83m	TOTALS		0.000E+00		1.634E+10	1.367E+03				4.764E+03
Kr-85m	INITIAL	0.000E+00		6.010E+06				0.000E+00		
Kr-85m	TOTALS		0.000E+00		1.396E+11	8.722E+03				4.465E+04
Kr-85	INITIAL	0.000E+00		6.310E+08				0.000E+00		
Kr-85	TOTALS		0.000E+00		1.627E+15	1.596E+06				1.057E+07
Kr-87	INITIAL	0.000E+00		4.030E+06				0.000E+00		
Kr-87	TOTALS		0.000E+00		2.660E+10	2.309E+03				6.108E+03
Kr-88	INITIAL	0.000E+00		1.130E+07				0.000E+00		
Kr-88	TOTALS		0.000E+00		1.665E+11	1.257E+04				5.521E+04
Kr-89	INITIAL	0.000E+00		3.270E+05				0.000E+00		
Kr-89	TOTALS		0.000E+00		8.944E+07	7.866E+00				1.218E+00
Xe-131m	INITIAL	0.000E+00		2.050E+07				0.000E+00		
Xe-131m	TOTALS		0.000E+00		2.497E+13	5.135E+04				3.386E+05
Xe-133m	INITIAL	0.000E+00		1.710E+07				0.000E+00		
Xe-133m	TOTALS		0.000E+00		4.656E+12	4.105E+04				2.660E+05
Xe-133	INITIAL	0.000E+00		1.270E+09				0.000E+00		
Xe-133	TOTALS		0.000E+00		8.170E+14	3.144E+06				2.063E+07
Xe-135m	INITIAL	0.000E+00		3.910E+06				0.000E+00		
Xe-135m	TOTALS		0.000E+00		5.198E+09	4.571E+02				2.626E+02
Xe-135	INITIAL	0.000E+00		4.210E+07				0.000E+00		
Xe-135	TOTALS		0.000E+00		1.993E+12	7.998E+04				4.673E+05
Xe-137	INITIAL	0.000E+00		8.050E+05				0.000E+00		
Xe-137	TOTALS		0.000E+00		2.669E+08	2.347E+01				4.385E+00
Xe-138	INITIAL	0.000E+00		2.760E+06				0.000E+00		
Xe-138	TOTALS		0.000E+00		3.375E+09	2.968E+02				1.610E+02

TRAILS_PC -- Transport of Radioactive Material in Linear Systems, v1.0a
ITN - for CR, EAB & LPZ dose (SA Case 2) [sa2ITN.in] (1/01)

***PROGENY INGROWTH ON ***

	- EXCLUSION AREA BOUNDARY -			--- LOW POPULATION ZONE ---			---------- CONTROL ROOM ----------			
	EDE DOSE mrem	SKIN-DE DOSE mrem	THY-CDE DOSE mrem	EDE DOSE mrem	SKIN-DE DOSE mrem	THY-CDE DOSE mrem	EDE DOSE mrem	EDE RATE DOSE RATE mrem/h	SKIN-DE DOSE mrem	THY-CDE DOSE mrem
Kr-83m TOTALS	1.18E-08	0.00E+00	0.00E+00	1.23E-09	0.00E+00	0.00E+00	7.26E-10		0.00E+00	0.00E+00
Kr-85m TOTALS	8.81E-05	1.74E-04	0.00E+00	1.36E-05	2.69E-05	0.00E+00	1.19E-05		4.66E-04	0.00E+00
Kr-85 TOTALS	1.48E-04	2.07E-02	0.00E+00	3.43E-05	4.79E-03	0.00E+00	3.85E-05		1.07E-01	0.00E+00
Kr-87 TOTALS	2.29E-04	5.43E-04	0.00E+00	1.98E-05	4.69E-05	0.00E+00	8.88E-06		4.19E-04	0.00E+00
Kr-88 TOTALS	2.11E-03	4.64E-04	0.00E+00	2.72E-04	5.99E-05	0.00E+00	2.03E-04		8.89E-04	0.00E+00
Kr-89 TOTALS	2.64E-06	2.86E-06	0.00E+00	1.53E-07	1.66E-07	0.00E+00	4.03E-09		8.71E-08	0.00E+00
Xe-131m TOTALS	1.83E-05	2.03E-04	0.00E+00	4.21E-06	4.67E-05	0.00E+00	4.72E-06		1.04E-03	0.00E+00
Xe-133m TOTALS	5.25E-05	3.49E-04	0.00E+00	1.17E-05	7.78E-05	0.00E+00	1.29E-05		1.70E-03	0.00E+00
Xe-133 TOTALS	4.64E-03	8.78E-03	0.00E+00	1.06E-03	2.00E-03	0.00E+00	1.18E-03		4.44E-02	0.00E+00
Xe-135m TOTALS	3.22E-05	1.02E-05	0.00E+00	1.88E-06	5.97E-07	0.00E+00	1.83E-07		1.16E-06	0.00E+00
Xe-135 TOTALS	1.02E-03	1.67E-03	0.00E+00	1.92E-04	3.13E-04	0.00E+00	1.90E-04		6.17E-03	0.00E+00
Xe-137 TOTALS	7.39E-07	1.12E-05	0.00E+00	4.29E-08	6.50E-07	0.00E+00	1.36E-09		4.10E-07	0.00E+00
Xe-138 TOTALS	6.11E-05	4.55E-05	0.00E+00	3.56E-06	2.65E-06	0.00E+00	3.28E-07		4.86E-06	0.00E+00

TRAILS_PC -- Transport of Radioactive Material in Linear Systems, v1.0a
ITN - for CR, EAB & LPZ dose (SA Case 2) [sa2ITN.in] (1/01)

***PROGENY INGROWTH ON ***

	- EXCLUSION AREA BOUNDARY -			--- LOW POPULATION ZONE ---			---------- CONTROL ROOM ----------			
	EDE DOSE mrem	SKIN-DE DOSE mrem	THY-CDE DOSE mrem	EDE DOSE mrem	SKIN-DE DOSE mrem	THY-CDE DOSE mrem	EDE DOSE mrem	EDE RATE DOSE RATE mrem/h	SKIN-DE DOSE mrem	THY-CDE DOSE mrem
ALL NUCLIDES										
0.5000 h	2.30E-03	8.39E-03	0.00E+00	1.34E-04	4.87E-04	0.00E+00	1.11E-05	4.31E-05	8.20E-04	0.00E+00
1.5000 h	4.16E-03	1.64E-02	0.00E+00	2.42E-04	9.53E-04	0.00E+00	4.14E-05	4.02E-05	3.25E-03	0.00E+00
2.0000 h	1.94E-03	8.10E-03	0.00E+00	1.13E-04	4.70E-04	0.00E+00	3.72E-05	1.06E-04	3.10E-03	0.00E+00
4.0000 h	0.00E+00	0.00E+00	0.00E+00	4.14E-04	1.85E-03	0.00E+00	3.75E-04	2.49E-04	3.39E-02	0.00E+00
8.0000 h	0.00E+00	0.00E+00	0.00E+00	7.11E-04	3.61E-03	0.00E+00	1.14E-03	3.10E-04	1.17E-01	0.00E+00
8.5000 h	0.00E+00	0.00E+00	0.00E+00	0.00E+00	0.00E+00	0.00E+00	3.16E-05	2.38E-06	3.35E-03	0.00E+00
24.0000 h	0.00E+00	0.00E+00	0.00E+00	0.00E+00	0.00E+00	0.00E+00	1.16E-05	1.28E-07	1.34E-03	0.00E+00
96.0000 h	0.00E+00	0.00E+00	0.00E+00	0.00E+00	0.00E+00	0.00E+00	4.23E-07	3.16E-13	5.62E-05	0.00E+00
720.0000 h	0.00E+00	0.00E+00	0.00E+00	0.00E+00	0.00E+00	0.00E+00	7.07E-13	0.00E+00	1.28E-10	0.00E+00
TOTALS	8.41E-03	3.29E-02	0.00E+00	1.61E-03	7.37E-03	0.00E+00	1.65E-03		1.62E-01	0.00E+00

TRAILSPC Input File For ITC Case

```
'L1 ',10,1.0E-3,3.47E-4,1.0E-5,3.47E-4,1.0,1.0E-3,3.47E-4,1,24,0,2
'ITC - for CR, EAB & LPZ dose (SA Case 2) [sa2ITC.in] (1/01) '
'C1 ','not used ',0.0,0.0,0.0,0.0
'C2 ','intact S/G ',9.213E-8,0.0,0.0,0.0
'CR ',1.73E5 ,10.,10.,0.0,0.960,0.0
'PRD',24*0.0
'PRD',14*0.0,3.29E5,3.21E5,5.66E5,3.55E5,4.26E5,5*0.0
'INI',1.0,' ',24*0.0
'INI',1.0,'uCi',14*0.0,1.12E7,4.40E6,1.67E7,2.47E6,9.64E6,5*0.0
'INI',1.0,' ',24*0.0
'TIM',1800.,3600.,5400.,7200.,14400.,28800.,30600.,86400.,3.456E5,2.592E6
'XPR',10*0.0
'XPR',5*1.0,.002,4*0.0
'XPR',50.0,2*1.0,3*104.,2800.,3*50.
'XRM',10*0.0
'XRM',2*1.0,4*0.01,4*0.0
'XRM',50.0,2*1.0,3*104.,2800.,3*50.
'XRF',10*0.0
'XRF',10*0.0
'XRF',3*0.0,3*1.0,4*0.0
'XOQEB',4*1.04,6*0.0
'XBREB',4*1.0,6*0.0
'XOQLZ',6*6.04,2*4.33,2.10,0.744
'XBRLZ',10*1.0
'XOQ',6*2.43,2*1.22,0.890,0.626
'XBR',10*1.0
'OCC',8*1.0,0.6,0.4
```

TRAILS_PC -- Transport of Radioactive Material in Linear Systems, v1.0a
ITC - for CR, EAB & LPZ dose (SA Case 2) [sa2ITC.in] (1/01) ***PROGENY INGROWTH ON ***

REMOVAL:	0.000E+00 1/sec	9.213E-08 1/sec	1.000E+01 cfm
NUC Grp 1 REL FR:	0.000E+00	0.000E+00	INTAKE REDUCT: 0.000E+00
NUC Grp 2 REL FR:	0.000E+00	0.000E+00	INTAKE REDUCT: 9.600E-01
NUC Grp 3 REL FR:	0.000E+00	0.000E+00	INTAKE REDUCT: 0.000E+00

MULTIPLIERS====>

STEP	TIME	XPR	XREM	XRF	XPR	XREM	XRF	XPR	XREM	XRF
1	1.800E+03	0.00	0.00	0.00	1.00	1.00	0.00	50.0	50.0	0.00
2	3.600E+03	0.00	0.00	0.00	1.00	1.00	0.00	1.00	1.00	0.00
3	5.400E+03	0.00	0.00	0.00	1.00	1.000E-02	0.00	1.00	1.00	0.00
4	7.200E+03	0.00	0.00	0.00	1.00	1.000E-02	0.00	104.	104.	1.00
5	1.440E+04	0.00	0.00	0.00	1.00	1.000E-02	0.00	104.	104.	1.00
6	2.880E+04	0.00	0.00	0.00	2.000E-03	1.000E-02	0.00	104.	104.	1.00
7	3.060E+04	0.00	0.00	0.00	0.00	0.00	0.00	2.800E+03	2.800E+03	0.00
8	8.640E+04	0.00	0.00	0.00	0.00	0.00	0.00	50.0	50.0	0.00
9	3.456E+05	0.00	0.00	0.00	0.00	0.00	0.00	50.0	50.0	0.00
10	2.592E+06	0.00	0.00	0.00	0.00	0.00	0.00	50.0	50.0	0.00

	CONTROL ROOM			EXCLUSION AREA BOUNDARY		LOW POPULATION ZONE	
	X/Q s/M3	Breathing M3/s	Occupancy	X/Q s/M3	Breathing M3/s	X/Q s/M3	Breathing M3/s
	1.000E-03	3.470E-04	1.000E+00	1.000E-03	3.470E-04	1.000E-05	3.470E-04

MULTIPLIERS====>

STEP	TIME,s							
1	1.800E+03	2.43	1.00	1.00	1.04	1.00	6.04	1.00
2	3.600E+03	2.43	1.00	1.00	1.04	1.00	6.04	1.00
3	5.400E+03	2.43	1.00	1.00	1.04	1.00	6.04	1.00
4	7.200E+03	2.43	1.00	1.00	1.04	1.00	6.04	1.00
5	1.440E+04	2.43	1.00	1.00	0.00	0.00	6.04	1.00
6	2.880E+04	2.43	1.00	1.00	0.00	0.00	6.04	1.00
7	3.060E+04	1.22	1.00	1.00	0.00	0.00	4.33	1.00
8	8.640E+04	1.22	1.00	1.00	0.00	0.00	4.33	1.00
9	3.456E+05	0.890	1.00	0.600	0.00	0.00	2.10	1.00
10	2.592E+06	0.626	1.00	0.400	0.00	0.00	0.744	1.00

```
TRAILS_PC -- Transport of Radioactive Material in Linear Systems, V1.0a
 ITC - for CR, EAB & LPZ dose (SA Case 2) [sa2ITC.in] (1/01)                    ***PROGENY INGROWTH ON ***

                    COMP: not used                  COMP: intact S/G                          COMP: Control Room
                                                                                        VOLUME: 1.730E+05 Cu.Ft.
                    ---------------------------------------------------------------------------------------------
          INITIAL:  0.000E+00 I-131                 1.120E+07 I-131    uCi                    0.000E+00 I-131
                    0.000E+00 I-132                 4.400E+06 I-132                           0.000E+00 I-132
                    0.000E+00 I-133                 1.670E+07 I-133                           0.000E+00 I-133
                    0.000E+00 I-134                 2.470E+06 I-134                           0.000E+00 I-134
                    0.000E+00 I-135                 9.640E+06 I-135                           0.000E+00 I-135
 ACT MULT (to uCi):  1.000E+00                      1.000E+00                                 1.000E+00
                    ---------------------------------------------------------------------------------------------
 PRODUCTION,uCi/s:  0.000E+00 I-131                 3.290E+05 I-131                      INTAKE: 1.000E+01 CFM
                    0.000E+00 I-132                 3.210E+05 I-132
                    0.000E+00 I-133                 5.660E+05 I-133
                    0.000E+00 I-134                 3.550E+05 I-134
                    0.000E+00 I-135                 4.260E+05 I-135
```

TRAILS_PC -- Transport of Radioactive Material in Linear Systems, v1.0a
ITC - for CR, EAB & LPZ dose (SA Case 2) [sa2ITC.in] (1/01) ***PROGENY INGROWTH ON ***

STEP	TIME	not used CURRENT uCi	not used INTEGRD uCi-sec	intact S/G CURRENT uCi	intact S/G INTEGRD uCi-sec	AVERAGE RELEASED uCi	AVERAGE RELEASE uCi/sec	CONTROL ROOM CURRENT uCi	CONTROL ROOM CURRENT uCi/cc	CONTROL ROOM INTEGRD uCi-sec
Xe-131m	INITIAL	0.000E+00		0.000E+00				0.000E+00		
Xe-131m	TOTALS		0.000E+00		3.221E+13	9.501E+00				7.832E+01
Xe-133m	INITIAL	0.000E+00		0.000E+00				0.000E+00		
Xe-133m	TOTALS		0.000E+00		2.546E+13	2.172E+02				1.753E+03
Xe-133	INITIAL	0.000E+00		0.000E+00				0.000E+00		
Xe-133	TOTALS		0.000E+00		8.633E+14	3.102E+03				2.527E+04
Xe-135m	INITIAL	0.000E+00		0.000E+00				0.000E+00		
Xe-135m	TOTALS		0.000E+00		3.487E+13	3.532E+04				8.340E+04
Xe-135	INITIAL	0.000E+00		0.000E+00				0.000E+00		
Xe-135	TOTALS		0.000E+00		2.113E+14	2.523E+04				1.913E+05
I-131	INITIAL	0.000E+00		1.120E+07				0.000E+00		
I-131	TOTALS		0.000E+00		4.407E+15	2.914E+05				4.214E+05
I-132	INITIAL	0.000E+00		4.400E+06				0.000E+00		
I-132	TOTALS		0.000E+00		5.538E+13	2.153E+05				2.069E+05
I-133	INITIAL	0.000E+00		1.670E+07				0.000E+00		
I-133	TOTALS		0.000E+00		8.840E+14	4.832E+05				6.668E+05
I-134	INITIAL	0.000E+00		2.470E+06				0.000E+00		
I-134	TOTALS		0.000E+00		2.333E+13	1.857E+05				1.117E+05
I-135	INITIAL	0.000E+00		9.640E+06				0.000E+00		
I-135	TOTALS		0.000E+00		2.113E+14	3.363E+05				4.174E+05

TRAILS_PC -- Transport of Radioactive Material in Linear Systems, v1.0a
ITC - for CR, EAB & LPZ dose (SA Case 2) [sa2ITC.in] (1/01)

***PROGENY INGROWTH ON ***

	- EXCLUSION AREA BOUNDARY -			--- LOW POPULATION ZONE ---			---------- CONTROL ROOM ----------			
	EDE DOSE mrem	SKIN-DE DOSE mrem	THY-CDE DOSE mrem	EDE DOSE mrem	SKIN-DE DOSE mrem	THY-CDE DOSE mrem	EDE DOSE mrem	EDE RATE DOSE RATE mrem/h	SKIN-DE DOSE mrem	THY-CDE DOSE mrem
Xe-131m TOTALS	2.70E-09	2.99E-08	0.00E+00	7.80E-10	8.64E-09	0.00E+00	1.09E-09		2.41E-07	0.00E+00
Xe-133m TOTALS	2.27E-07	1.51E-06	0.00E+00	6.20E-08	4.12E-07	0.00E+00	8.49E-08		1.12E-05	0.00E+00
Xe-133 TOTALS	3.79E-06	7.17E-06	0.00E+00	1.05E-06	1.98E-06	0.00E+00	1.45E-06		5.44E-05	0.00E+00
Xe-135m TOTALS	1.58E-03	5.01E-04	0.00E+00	1.45E-04	4.62E-05	0.00E+00	5.82E-05		3.68E-04	0.00E+00
Xe-135 TOTALS	2.51E-04	4.09E-04	0.00E+00	6.05E-05	9.86E-05	0.00E+00	7.79E-05		2.53E-03	0.00E+00
I-131 TOTALS	1.30E-02	6.84E-03	8.02E+01	1.07E-03	5.62E-04	6.60E+00	2.62E-04		2.75E-03	3.22E+01
I-132 TOTALS	7.06E-02	2.09E-02	4.17E-01	4.91E-03	1.45E-03	2.91E-02	8.02E-04		4.72E-03	9.44E-02
I-133 TOTALS	3.53E-02	3.28E-02	2.27E+01	2.84E-03	2.63E-03	1.82E+00	6.65E-04		1.23E-02	8.50E+00
I-134 TOTALS	7.70E-02	2.53E-02	6.56E-02	4.89E-03	1.61E-03	4.16E-03	5.00E-04		3.27E-03	8.47E-03
I-135 TOTALS	7.03E-02	2.13E-02	2.89E+00	5.37E-03	1.62E-03	2.21E-01	1.13E-03		6.82E-03	9.25E-01
ALL NUCLIDES										
0.5000 h	6.94E-02	2.77E-02	2.63E+01	4.03E-03	1.61E-03	1.53E+00	3.26E-04	1.25E-03	2.61E-03	2.59E+00
1.0000 h	1.92E-01	7.75E-02	7.69E+01	1.11E-02	4.50E-03	4.47E+00	5.98E-04	1.15E-03	4.91E-03	5.23E+00
1.5000 h	2.98E-03	1.22E-03	1.27E+00	1.73E-04	7.09E-05	7.38E-02	5.37E-04	1.01E-03	4.57E-03	5.34E+00
2.0000 h	3.90E-03	1.63E-03	1.77E+00	2.27E-04	9.45E-05	1.03E-01	4.37E-04	7.56E-04	3.84E-03	4.86E+00
4.0000 h	0.00E+00	0.00E+00	0.00E+00	1.35E-03	5.83E-04	6.97E-01	9.53E-04	2.90E-04	9.07E-03	1.28E+01
8.0000 h	0.00E+00	0.00E+00	0.00E+00	2.37E-03	1.17E-03	1.80E+00	6.36E-04	9.09E-05	7.62E-03	1.07E+01
8.5000 h	0.00E+00	0.00E+00	0.00E+00	0.00E+00	0.00E+00	0.00E+00	9.16E-06	6.65E-07	1.33E-04	1.59E-01
24.0000 h	0.00E+00	0.00E+00	0.00E+00	0.00E+00	0.00E+00	0.00E+00	2.65E-06	1.85E-08	4.19E-05	6.21E-02
96.0000 h	0.00E+00	0.00E+00	0.00E+00	0.00E+00	0.00E+00	0.00E+00	5.26E-08	1.80E-14	8.85E-07	2.38E-03
720.0000 h	0.00E+00	0.00E+00	0.00E+00	0.00E+00	0.00E+00	0.00E+00	3.98E-14	0.00E+00	5.07E-13	4.17E-09
TOTALS	2.68E-01	1.08E-01	1.06E+02	1.93E-02	8.03E-03	8.67E+00	3.50E-03		3.28E-02	4.18E+01

TRAILSPC Input File For FRC Case

```
'L1 ',9,1.0E-3,3.47E-4,1.0E-5,3.47E-4,1.0,1.0E-3,3.47E-4,1,24,0,2
'FRC - for CR, EAB & LPZ dose (SA Case 2) [sa2FRC14_5.in] (1/01) '
'C1 ','not used ',0.0,0.0,0.0,0.0
'C2 ','Affected S/G ',6.458E-6,0.0,0.0,0.0
'CR ',1.73E5,10.,10.,0.0,0.960,0.0
'PRD',24*0.0
'PRD',14*0.0,3.29E5,3.21E5,5.66E5,3.55E5,4.26E5,5*0.0
'INI',1.0,' ',24*0.0
'INI',1.0,'uCi',1.64E6,5.73E6,6.02E8,3.85E6,1.08E7,3.12E5,0.0,
1.95E7,1.63E7,1.21E9,3.73E6,4.02E7,7.68E5,2.64E6,
1.12E7,4.40E6,1.67E7,2.47E6,9.64E6,5*0.0
'INI',1.0,' ',24*0.0
'TIM',1800.,5400.,7200.,14400.,28800.,30600.,86400.,3.456E5,2.592E6
'XPR',9*0.0
'XPR',4*1.0,.002,4*0.0
'XPR',50.0,1.0,3*104.,2800.,3*50.
'XRM',9*0.0
'XRM',5*1.0,4*0.0
'XRM',50.0,1.0,3*104.,2800.,3*50.
'XRF',9*0.0
'XRF',9*0.0
'XRF',2*0.0,3*1.0,4*0.0
'XOQEB',3*1.04,6*0.0
'XBREB',3*1.0,6*0.0
'XOQLZ',5*6.04,2*4.33,2.10,0.744
'XBRLZ',9*1.0
'XOQ',5*2.43,2*1.22,0.890,0.626
'XBR',9*1.0
'OCC',7*1.0,0.6,0.4
```

TRAILS_PC -- Transport of Radioactive Material in Linear Systems, V1.0a
FRC - for CR, EAB & LPZ dose (SA Case 2) [sa2FRC14_5.in] (1/01)

***PROGENY INGROWTH ON ***

	COMP: not used	COMP: Affected S/G	COMP: Control Room VOLUME: 1.730E+05 Cu.Ft.
INITIAL:	0.000E+00 Kr-83m	1.640E+06 Kr-83m uCi	0.000E+00 Kr-83m
	0.000E+00 Kr-85m	5.730E+06 Kr-85m	0.000E+00 Kr-85m
	0.000E+00 Kr-85	6.020E+08 Kr-85	0.000E+00 Kr-85
	0.000E+00 Kr-87	3.850E+06 Kr-87	0.000E+00 Kr-87
	0.000E+00 Kr-88	1.080E+07 Kr-88	0.000E+00 Kr-88
	0.000E+00 Kr-89	3.120E+05 Kr-89	0.000E+00 Kr-89
	0.000E+00 Xe-131m	1.950E+07 Xe-131m	0.000E+00 Xe-131m
	0.000E+00 Xe-133m	1.630E+07 Xe-133m	0.000E+00 Xe-133m
	0.000E+00 Xe-133	1.210E+09 Xe-133	0.000E+00 Xe-133
	0.000E+00 Xe-135m	3.730E+06 Xe-135m	0.000E+00 Xe-135m
	0.000E+00 Xe-135	4.020E+07 Xe-135	0.000E+00 Xe-135
	0.000E+00 Xe-137	7.680E+05 Xe-137	0.000E+00 Xe-137
	0.000E+00 Xe-138	2.640E+06 Xe-138	0.000E+00 Xe-138
	0.000E+00 I-131	1.120E+07 I-131	0.000E+00 I-131
	0.000E+00 I-132	4.400E+06 I-132	0.000E+00 I-132
	0.000E+00 I-133	1.670E+07 I-133	0.000E+00 I-133
	0.000E+00 I-134	2.470E+06 I-134	0.000E+00 I-134
	0.000E+00 I-135	9.640E+06 I-135	0.000E+00 I-135
ACT MULT (to uCi):	1.000E+00	1.000E+00	1.000E+00
PRODUCTION, uCi/s:	0.000E+00 I-131	3.290E+05 I-131	INTAKE: 1.000E+01 CFM
	0.000E+00 I-132	3.210E+05 I-132	
	0.000E+00 I-133	5.660E+05 I-133	
	0.000E+00 I-134	3.550E+05 I-134	
	0.000E+00 I-135	4.260E+05 I-135	

TRAILS_PC -- Transport of Radioactive Material in Linear Systems, v1.0a
FRC - for CR, EAB & LPZ dose (SA Case 2) [sa2FRC14_5.in] (1/01) ***PROGENY INGROWTH ON ***

REMOVAL:	0.000E+00 1/sec	6.458E-06 1/sec	1.000E+01 cfm
NUC Grp 1 REL FR:	0.000E+00	0.000E+00	INTAKE REDUCT: 0.000E+00
NUC Grp 2 REL FR:	0.000E+00	0.000E+00	INTAKE REDUCT: 9.600E-01
NUC Grp 3 REL FR:	0.000E+00	0.000E+00	INTAKE REDUCT: 0.000E+00

MULTIPLIERS====>

STEP	TIME	XPR	XREM	XRF	XPR	XREM	XRF	XPR	XREM	XRF
1	1.800E+03	0.00	0.00	0.00	1.00	1.00	0.00	50.0	50.0	0.00
2	5.400E+03	0.00	0.00	0.00	1.00	1.00	0.00	1.00	1.00	0.00
3	7.200E+03	0.00	0.00	0.00	1.00	1.00	0.00	104.	104.	1.00
4	1.440E+04	0.00	0.00	0.00	1.00	1.00	0.00	104.	104.	1.00
5	2.880E+04	0.00	0.00	0.00	2.000E-03	1.00	0.00	104.	104.	1.00
6	3.060E+04	0.00	0.00	0.00	0.00	0.00	0.00	2.800E+03	2.800E+03	0.00
7	8.640E+04	0.00	0.00	0.00	0.00	0.00	0.00	50.0	50.0	0.00
8	3.456E+05	0.00	0.00	0.00	0.00	0.00	0.00	50.0	50.0	0.00
9	2.592E+06	0.00	0.00	0.00	0.00	0.00	0.00	50.0	50.0	0.00

MULTIPLIERS====>

STEP	TIME,s	CONTROL ROOM X/Q s/M3	CONTROL ROOM Breathing M3/s	CONTROL ROOM Occupancy	EXCLUSION AREA BOUNDARY X/Q s/M3	EXCLUSION AREA BOUNDARY Breathing M3/s	LOW POPULATION ZONE X/Q s/M3	LOW POPULATION ZONE Breathing M3/s
		1.000E-03	3.470E-04	1.000E+00	1.000E-03	3.470E-04	1.000E-05	3.470E-04
1	1.800E+03	2.43	1.00	1.00	1.04	1.00	6.04	1.00
2	5.400E+03	2.43	1.00	1.00	1.04	1.00	6.04	1.00
3	7.200E+03	2.43	1.00	1.00	1.04	1.00	6.04	1.00
4	1.440E+04	2.43	1.00	1.00	0.00	0.00	6.04	1.00
5	2.880E+04	2.43	1.00	1.00	0.00	0.00	6.04	1.00
6	3.060E+04	1.22	1.00	1.00	0.00	0.00	4.33	1.00
7	8.640E+04	1.22	1.00	1.00	0.00	0.00	4.33	1.00
8	3.456E+05	0.890	1.00	0.600	0.00	0.00	2.10	1.00
9	2.592E+06	0.626	1.00	0.400	0.00	0.00	0.744	1.00

TRAILS_PC -- Transport of Radioactive Material in Linear Systems, v1.0a
FRC - for CR, EAB & LPZ dose (SA Case 2) [sa2FRC14_5.in] (1/01)

***PROGENY INGROWTH ON ***

STEP	TIME	not used CURRENT uCi	INTEGRD uCi-sec	Affected S/G CURRENT uCi	INTEGRD uCi-sec	AVERAGE RELEASED uCi	AVERAGE RELEASE uCi/sec	CONTROL ROOM CURRENT uCi	CONTROL ROOM CURRENT uCi/cc	CONTROL ROOM INTEGRD uCi-sec
Kr-83m	INITIAL	0.000E+00		1.640E+06				0.000E+00		
Kr-83m	TOTALS		0.000E+00		1.472E+10	9.104E+04				3.136E+05
Kr-85m	INITIAL	0.000E+00		5.730E+06				0.000E+00		
Kr-85m	TOTALS		0.000E+00		1.201E+11	5.683E+05				2.891E+06
Kr-85	INITIAL	0.000E+00		6.020E+08				0.000E+00		
Kr-85	TOTALS		0.000E+00		1.294E+15	1.022E+08				6.759E+08
Kr-87	INITIAL	0.000E+00		3.850E+06				0.000E+00		
Kr-87	TOTALS		0.000E+00		2.440E+10	1.558E+05				4.071E+05
Kr-88	INITIAL	0.000E+00		1.080E+07				0.000E+00		
Kr-88	TOTALS		0.000E+00		1.471E+11	8.286E+05				3.607E+06
Kr-89	INITIAL	0.000E+00		3.120E+05				0.000E+00		
Kr-89	TOTALS		0.000E+00		8.519E+07	5.502E+02				8.522E+01
Xe-131m	INITIAL	0.000E+00		1.950E+07				0.000E+00		
Xe-131m	TOTALS		0.000E+00		4.785E+13	3.328E+06				2.193E+07
Xe-133m	INITIAL	0.000E+00		1.630E+07				0.000E+00		
Xe-133m	TOTALS		0.000E+00		2.589E+13	3.738E+06				2.429E+07
Xe-133	INITIAL	0.000E+00		1.210E+09				0.000E+00		
Xe-133	TOTALS		0.000E+00		1.402E+15	2.170E+08				1.424E+09
Xe-135m	INITIAL	0.000E+00		3.730E+06				0.000E+00		
Xe-135m	TOTALS		0.000E+00		3.139E+13	9.283E+07				1.433E+08
Xe-135	INITIAL	0.000E+00		4.020E+07				0.000E+00		
Xe-135	TOTALS		0.000E+00		1.866E+14	1.303E+08				8.089E+08
Xe-137	INITIAL	0.000E+00		7.680E+05				0.000E+00		
Xe-137	TOTALS		0.000E+00		2.541E+08	1.641E+03				3.066E+02
Xe-138	INITIAL	0.000E+00		2.640E+06				0.000E+00		
Xe-138	TOTALS		0.000E+00		3.204E+09	2.069E+04				1.125E+04
I-131	INITIAL	0.000E+00		1.120E+07				0.000E+00		
I-131	TOTALS		0.000E+00		3.842E+15	6.110E+08				1.969E+08

TRAILS_PC -- Transport of Radioactive Material in Linear Systems, v1.0a
FRC - for CR, EAB & LPZ dose (SA Case 2) [sa2FRC14_5.in] (1/01)

***PROGENY INGROWTH ON ***

STEP	TIME	not used CURRENT uCi	not used INTEGRD uCi-sec	Affected S/G CURRENT uCi	Affected S/G INTEGRD uCi-sec	AVERAGE RELEASED uCi	AVERAGE RELEASE uCi/sec	CONTROL ROOM CURRENT uCi	CONTROL ROOM CURRENT uCi/cc	CONTROL ROOM INTEGRD uCi-sec
I-132	INITIAL	0.000E+00		4.400E+06				0.000E+00		
I-132	TOTALS		0.000E+00		5.202E+13	2.810E+08				6.858E+07
I-133	INITIAL	0.000E+00		1.670E+07				0.000E+00		
I-133	TOTALS		0.000E+00		7.801E+14	9.622E+08				3.005E+08
I-134	INITIAL	0.000E+00		2.470E+06				0.000E+00		
I-134	TOTALS		0.000E+00		2.267E+13	1.446E+08				2.498E+07
I-135	INITIAL	0.000E+00		9.640E+06				0.000E+00		
I-135	TOTALS		0.000E+00		1.910E+14	5.930E+08				1.725E+08

TRAILS_PC -- Transport of Radioactive Material in Linear Systems, v1.0a
FRC - for CR, EAB & LPZ dose (SA Case 2) [sa2FRC14_5.in] (1/01)

***PROGENY INGROWTH ON ***

	- EXCLUSION AREA BOUNDARY -			--- LOW POPULATION ZONE ---			---------- CONTROL ROOM ----------			
	EDE DOSE mrem	SKIN-DE DOSE mrem	THY-CDE DOSE mrem	EDE DOSE mrem	SKIN-DE DOSE mrem	THY-CDE DOSE mrem	EDE DOSE mrem	EDE RATE DOSE RATE mrem/h	SKIN-DE DOSE mrem	THY-CDE DOSE mrem
Kr-83m TOTALS	8.10E-07	0.00E+00	0.00E+00	8.17E-08	0.00E+00	0.00E+00	4.78E-08		0.00E+00	0.00E+00
Kr-85m TOTALS	6.04E-03	1.19E-02	0.00E+00	8.89E-04	1.75E-03	0.00E+00	7.68E-04		3.02E-02	0.00E+00
Kr-85 TOTALS	1.01E-02	1.41E+00	0.00E+00	2.19E-03	3.07E-01	0.00E+00	2.46E-03		6.86E+00	0.00E+00
Kr-87 TOTALS	1.58E-02	3.74E-02	0.00E+00	1.33E-03	3.16E-03	0.00E+00	5.92E-04		2.79E-02	0.00E+00
Kr-88 TOTALS	1.45E-01	3.19E-02	0.00E+00	1.79E-02	3.95E-03	0.00E+00	1.33E-02		5.81E-02	0.00E+00
Kr-89 TOTALS	1.84E-04	2.00E-04	0.00E+00	1.07E-05	1.16E-05	0.00E+00	2.82E-07		6.09E-06	0.00E+00
Xe-131m TOTALS	1.25E-03	1.39E-02	0.00E+00	2.73E-04	3.03E-03	0.00E+00	3.05E-04		6.74E-02	0.00E+00
Xe-133m TOTALS	3.70E-03	2.46E-02	0.00E+00	1.07E-03	7.09E-03	0.00E+00	1.18E-03		1.56E-01	0.00E+00
Xe-133 TOTALS	3.19E-01	6.04E-01	0.00E+00	7.32E-02	1.38E-01	0.00E+00	8.15E-02		3.07E+00	0.00E+00
Xe-135m TOTALS	5.44E-01	1.73E-01	0.00E+00	3.82E-01	1.21E-01	0.00E+00	1.00E-01		6.33E-01	0.00E+00
Xe-135 TOTALS	1.96E-01	3.20E-01	0.00E+00	3.13E-01	5.09E-01	0.00E+00	3.30E-01		1.07E+01	0.00E+00
Xe-137 TOTALS	5.17E-05	7.82E-04	0.00E+00	3.00E-06	4.54E-05	0.00E+00	9.52E-08		2.87E-05	0.00E+00
Xe-138 TOTALS	4.26E-03	3.17E-03	0.00E+00	2.48E-04	1.85E-04	0.00E+00	2.29E-05		3.39E-04	0.00E+00
I-131 TOTALS	3.44E+00	1.81E+00	2.13E+04	2.23E+00	1.18E+00	1.38E+04	1.22E-01		1.28E+00	1.51E+04

TRAILS_PC -- Transport of Radioactive Material in Linear Systems, v1.0a
FRC - for CR, EAB & LPZ dose (SA Case 2) [sa2FRC14_5.in] (1/01)

***PROGENY INGROWTH ON ***

	- EXCLUSION AREA BOUNDARY -			--- LOW POPULATION ZONE ---			---------- CONTROL ROOM ----------			
	EDE DOSE mrem	SKIN-DE DOSE mrem	THY-CDE DOSE mrem	EDE DOSE mrem	SKIN-DE DOSE mrem	THY-CDE DOSE mrem	EDE DOSE mrem	EDE RATE DOSE RATE mrem/h	SKIN-DE DOSE mrem	THY-CDE DOSE mrem
I-132 TOTALS	1.73E+01	5.10E+00	1.02E+02	6.41E+00	1.90E+00	3.79E+01	2.66E-01		1.56E+00	3.13E+01
I-133 TOTALS	9.30E+00	8.64E+00	5.98E+03	5.65E+00	5.25E+00	3.63E+03	3.00E-01		5.54E+00	3.83E+03
I-134 TOTALS	1.68E+01	5.52E+00	1.43E+01	3.81E+00	1.25E+00	3.24E+00	1.12E-01		7.31E-01	1.89E+00
I-135 TOTALS	1.81E+01	5.49E+00	7.45E+02	9.47E+00	2.87E+00	3.89E+02	4.68E-01		2.82E+00	3.82E+02
ALL NUCLIDES										
0.5000 h	5.00E+00	2.52E+00	1.84E+03	2.91E-01	1.46E-01	1.07E+02	2.35E-02	9.04E-02	2.40E-01	1.81E+02
1.5000 h	3.42E+01	1.50E+01	1.41E+04	1.99E+00	8.68E-01	8.20E+02	8.48E-02	8.06E-02	9.10E-01	7.62E+02
2.0000 h	2.70E+01	1.17E+01	1.22E+04	1.57E+00	6.81E-01	7.06E+02	4.88E-02	1.12E-01	6.26E-01	4.67E+02
4.0000 h	0.00E+00	0.00E+00	0.00E+00	9.19E+00	4.08E+00	4.72E+03	3.79E-01	2.43E-01	6.09E+00	3.64E+03
8.0000 h	0.00E+00	0.00E+00	0.00E+00	1.53E+01	7.76E+00	1.15E+04	1.22E+00	3.43E-01	2.47E+01	1.37E+04
8.5000 h	0.00E+00	0.00E+00	0.00E+00	0.00E+00	0.00E+00	0.00E+00	3.45E-02	2.47E-03	7.47E-01	4.11E+02
24.0000 h	0.00E+00	0.00E+00	0.00E+00	0.00E+00	0.00E+00	0.00E+00	9.69E-03	6.60E-05	2.46E-01	1.60E+02
96.0000 h	0.00E+00	0.00E+00	0.00E+00	0.00E+00	0.00E+00	0.00E+00	1.88E-04	6.73E-11	6.52E-03	6.11E+00
720.0000 h	0.00E+00	0.00E+00	0.00E+00	0.00E+00	0.00E+00	0.00E+00	1.49E-10	0.00E+00	9.33E-09	1.07E-05
TOTALS	6.62E+01	2.92E+01	2.81E+04	2.84E+01	1.35E+01	1.79E+04	1.80E+00		3.35E+01	1.93E+04

TRAILSPC Input File For ITP Case

```
'L1 ',10,1.0E-3,3.47E-4,1.0E-5,3.47E-4,1.0,1.0E-3,3.47E-4,1,24,0,2
'ITP - for CR, EAB & LPZ dose (SA Case 2) [sa2ITP.in] (1/01) '
'C1 ','not used ',0.0,0.0,0.0,0.0
'C2 ','intact S/G ',8.794E-8,0.0,0.0,0.0
'CR ',1.73E5 ,10.,10.,0.0,0.960,0.0
'PRD',24*0.0
'PRD',24*0.0
'INI',1.0,' ',24*0.0
'INI',1.0,'uCi',14*0.0,7.02E8,2.77E8,1.05E9,1.55E8,6.06E8,5*0.0
'INI',1.0,' ',24*0.0
'TIM',1800.,3600.,5400.,7200.,14400.,28800.,30600.,86400.,3.456E5,2.592E6
'XPR',10*0.0
'XPR',10*0.0
'XPR',50.0,2*1.0,3*104.,2800.,3*50.
'XRM',10*0.0
'XRM',2*1.0,4*0.01,4*0.0
'XRM',50.0,2*1.0,3*104.,2800.,3*50.
'XRF',10*0.0
'XRF',10*0.0
'XRF',3*0.0,3*1.0,4*0.0
'XOQEB',4*1.04,6*0.0
'XBREB',4*1.0,6*0.0
'XOQLZ',6*6.04,2*4.33,2.10,0.744
'XBRLZ',10*1.0
'XOQ',6*2.43,2*1.22,0.890,0.626
'XBR',10*1.0
'OCC',8*1.0,0.6,0.4
```

TRAILS_PC -- Transport of Radioactive Material in Linear Systems, V1.0a
ITP - for CR, EAB & LPZ dose (SA Case 2) [sa2ITP.in] (1/01)

***PROGENY INGROWTH ON ***

	COMP: not used	COMP: intact S/G		COMP: Control Room VOLUME: 1.730E+05 Cu.Ft.
INITIAL:	0.000E+00 I-131	7.020E+08 I-131	uCi	0.000E+00 I-131
	0.000E+00 I-132	2.770E+08 I-132		0.000E+00 I-132
	0.000E+00 I-133	1.050E+09 I-133		0.000E+00 I-133
	0.000E+00 I-134	1.550E+08 I-134		0.000E+00 I-134
	0.000E+00 I-135	6.060E+08 I-135		0.000E+00 I-135
ACT MULT (to uCi):	1.000E+00	1.000E+00		1.000E+00

TRAILS_PC -- Transport of Radioactive Material in Linear Systems, v1.0a
ITP - for CR, EAB & LPZ dose (SA Case 2) [sa2ITP.in] (1/01) ***PROGENY INGROWTH ON ***

REMOVAL:	0.000E+00 1/sec	8.794E-08 1/sec	1.000E+01 cfm
NUC Grp 1 REL FR:	0.000E+00	0.000E+00	INTAKE REDUCT: 0.000E+00
NUC Grp 2 REL FR:	0.000E+00	0.000E+00	INTAKE REDUCT: 9.600E-01
NUC Grp 3 REL FR:	0.000E+00	0.000E+00	INTAKE REDUCT: 0.000E+00

MULTIPLIERS====>

STEP	TIME	XPR	XREM	XRF	XPR	XREM	XRF	XPR	XREM	XRF
1	1.800E+03	0.00	0.00	0.00	0.00	1.00	0.00	50.0	50.0	0.00
2	3.600E+03	0.00	0.00	0.00	0.00	1.00	0.00	1.00	1.00	0.00
3	5.400E+03	0.00	0.00	0.00	0.00	1.000E-02	0.00	1.00	1.00	0.00
4	7.200E+03	0.00	0.00	0.00	0.00	1.000E-02	0.00	104.	104.	1.00
5	1.440E+04	0.00	0.00	0.00	0.00	1.000E-02	0.00	104.	104.	1.00
6	2.880E+04	0.00	0.00	0.00	0.00	1.000E-02	0.00	104.	104.	1.00
7	3.060E+04	0.00	0.00	0.00	0.00	0.00	0.00	2.800E+03	2.800E+03	0.00
8	8.640E+04	0.00	0.00	0.00	0.00	0.00	0.00	50.0	50.0	0.00
9	3.456E+05	0.00	0.00	0.00	0.00	0.00	0.00	50.0	50.0	0.00
10	2.592E+06	0.00	0.00	0.00	0.00	0.00	0.00	50.0	50.0	0.00

	-------- CONTROL ROOM --------			--- EXCLUSION AREA BOUNDARY ---		--- LOW POPULATION ZONE ---	
	X/Q s/M3	Breathing M3/s	Occupancy	X/Q s/M3	Breathing M3/s	X/Q s/M3	Breathing M3/s
	1.000E-03	3.470E-04	1.000E+00	1.000E-03	3.470E-04	1.000E-05	3.470E-04

MULTIPLIERS====>

STEP	TIME,s							
1	1.800E+03	2.43	1.00	1.00	1.04	1.00	6.04	1.00
2	3.600E+03	2.43	1.00	1.00	1.04	1.00	6.04	1.00
3	5.400E+03	2.43	1.00	1.00	1.04	1.00	6.04	1.00
4	7.200E+03	2.43	1.00	1.00	1.04	1.00	6.04	1.00
5	1.440E+04	2.43	1.00	1.00	0.00	0.00	6.04	1.00
6	2.880E+04	2.43	1.00	1.00	0.00	0.00	6.04	1.00
7	3.060E+04	1.22	1.00	1.00	0.00	0.00	4.33	1.00
8	8.640E+04	1.22	1.00	1.00	0.00	0.00	4.33	1.00
9	3.456E+05	0.890	1.00	0.600	0.00	0.00	2.10	1.00
10	2.592E+06	0.626	1.00	0.400	0.00	0.00	0.744	1.00

TRAILS_PC -- Transport of Radioactive Material in Linear Systems, v1.0a
ITP - for CR, EAB & LPZ dose (SA Case 2) [sa2ITP.in] (1/01)

***PROGENY INGROWTH ON ***

STEP	TIME	not used CURRENT uCi	not used INTEGRD uCi-sec	intact S/G CURRENT uCi	intact S/G INTEGRD uCi-sec	AVERAGE RELEASED uCi	AVERAGE RELEASE uCi/sec	CONTROL ROOM CURRENT uCi	CONTROL ROOM CURRENT uCi/cc	CONTROL ROOM INTEGRD uCi-sec
Xe-131m	INITIAL	0.000E+00		0.000E+00				0.000E+00		
Xe-131m	TOTALS		0.000E+00		4.762E+12	4.779E+00				7.241E+01
Xe-133m	INITIAL	0.000E+00		0.000E+00				0.000E+00		
Xe-133m	TOTALS		0.000E+00		3.265E+12	9.725E+01				1.417E+03
Xe-133	INITIAL	0.000E+00		0.000E+00				0.000E+00		
Xe-133	TOTALS		0.000E+00		1.108E+14	1.383E+03				2.034E+04
Xe-135m	INITIAL	0.000E+00		0.000E+00				0.000E+00		
Xe-135m	TOTALS		0.000E+00		3.432E+12	2.137E+04				9.111E+04
Xe-135	INITIAL	0.000E+00		0.000E+00				0.000E+00		
Xe-135	TOTALS		0.000E+00		2.080E+13	9.160E+03				1.214E+05
I-131	INITIAL	0.000E+00		7.020E+08				0.000E+00		
I-131	TOTALS		0.000E+00		6.503E+14	2.371E+05				8.382E+05
I-132	INITIAL	0.000E+00		2.770E+08				0.000E+00		
I-132	TOTALS		0.000E+00		3.308E+12	7.759E+04				1.692E+05
I-133	INITIAL	0.000E+00		1.050E+09				0.000E+00		
I-133	TOTALS		0.000E+00		1.134E+14	3.470E+05				1.158E+06
I-134	INITIAL	0.000E+00		1.550E+08				0.000E+00		
I-134	TOTALS		0.000E+00		7.056E+11	3.419E+04				4.551E+04
I-135	INITIAL	0.000E+00		6.060E+08				0.000E+00		
I-135	TOTALS		0.000E+00		2.080E+13	1.907E+05				5.597E+05

TRAILS_PC -- Transport of Radioactive Material in Linear Systems, v1.0a
ITP - for CR, EAB & LPZ dose (SA Case 2) [sa2ITP.in] (1/01)

***PROGENY INGROWTH ON ***

	- EXCLUSION AREA BOUNDARY -			--- LOW POPULATION ZONE ---			---------- CONTROL ROOM ----------			
	EDE DOSE mrem	SKIN-DE DOSE mrem	THY-CDE DOSE mrem	EDE DOSE mrem	SKIN-DE DOSE mrem	THY-CDE DOSE mrem	EDE DOSE mrem	EDE RATE DOSE RATE mrem/h	SKIN-DE DOSE mrem	THY-CDE DOSE mrem
Xe-131m TOTALS	4.29E-09	4.75E-08	0.00E+00	3.92E-10	4.35E-09	0.00E+00	1.01E-09		2.22E-07	0.00E+00
Xe-133m TOTALS	3.14E-07	2.09E-06	0.00E+00	2.77E-08	1.84E-07	0.00E+00	6.86E-08		9.08E-06	0.00E+00
Xe-133 TOTALS	5.25E-06	9.92E-06	0.00E+00	4.66E-07	8.82E-07	0.00E+00	1.16E-06		4.38E-05	0.00E+00
Xe-135m TOTALS	1.43E-03	4.54E-04	0.00E+00	8.78E-05	2.79E-05	0.00E+00	6.36E-05		4.02E-04	0.00E+00
Xe-135 TOTALS	2.69E-04	4.38E-04	0.00E+00	2.20E-05	3.58E-05	0.00E+00	4.95E-05		1.60E-03	0.00E+00
I-131 TOTALS	1.41E-02	7.44E-03	8.73E+01	8.67E-04	4.58E-04	5.37E+00	5.21E-04		5.47E-03	6.41E+01
I-132 TOTALS	3.00E-02	8.86E-03	1.77E-01	1.77E-03	5.23E-04	1.05E-02	6.56E-04		3.86E-03	7.72E-02
I-133 TOTALS	3.34E-02	3.10E-02	2.14E+01	2.04E-03	1.89E-03	1.31E+00	1.16E-03		2.13E-02	1.48E+01
I-134 TOTALS	1.55E-02	5.08E-03	1.32E-02	9.01E-04	2.96E-04	7.67E-04	2.04E-04		1.33E-03	3.45E-03
I-135 TOTALS	5.05E-02	1.53E-02	2.08E+00	3.05E-03	9.21E-04	1.25E-01	1.52E-03		9.14E-03	1.24E+00
ALL NUCLIDES										
0.5000 h	7.51E-02	3.50E-02	5.51E+01	4.36E-03	2.03E-03	3.20E+00	3.61E-04	1.40E-03	3.37E-03	5.42E+00
1.0000 h	6.88E-02	3.30E-02	5.48E+01	4.00E-03	1.92E-03	3.18E+00	6.79E-04	1.31E-03	6.47E-03	1.07E+01
1.5000 h	6.35E-04	3.14E-04	5.45E-01	3.69E-05	1.82E-05	3.16E-02	6.32E-04	1.22E-03	6.20E-03	1.08E+01
2.0000 h	5.91E-04	3.00E-04	5.42E-01	3.43E-05	1.74E-05	3.15E-02	5.39E-04	9.51E-04	5.43E-03	9.80E+00
4.0000 h	0.00E+00	0.00E+00	0.00E+00	1.19E-04	6.38E-05	1.24E-01	1.23E-03	3.76E-04	1.31E-02	2.52E+01
8.0000 h	0.00E+00	0.00E+00	0.00E+00	1.84E-04	1.09E-04	2.41E-01	7.17E-04	7.04E-05	8.50E-03	1.80E+01
8.5000 h	0.00E+00	0.00E+00	0.00E+00	0.00E+00	0.00E+00	0.00E+00	7.14E-06	5.30E-07	9.31E-05	2.05E-01
24.0000 h	0.00E+00	0.00E+00	0.00E+00	0.00E+00	0.00E+00	0.00E+00	2.29E-06	1.84E-08	3.18E-05	8.05E-02
96.0000 h	0.00E+00	0.00E+00	0.00E+00	0.00E+00	0.00E+00	0.00E+00	5.45E-08	2.30E-14	8.14E-07	3.12E-03
720.0000 h	0.00E+00	0.00E+00	0.00E+00	0.00E+00	0.00E+00	0.00E+00	5.11E-14	0.00E+00	6.13E-13	5.56E-09
TOTALS	1.45E-01	6.86E-02	1.11E+02	8.73E-03	4.16E-03	6.81E+00	4.17E-03		4.32E-02	8.02E+01

TRAILSPC Input File For FRP Case

```
'L1 ',9,1.0E-3,3.47E-4,1.0E-5,3.47E-4,1.0,1.0E-3,3.47E-4,1,24,0,2
'FRP - for CR, EAB & LPZ Dose (SA Case 2) [SA2FRP14_5.in] (1/01) '
'C1 ','not used ',0.0,0.0,0.0,0.0
'C2 ','Affected S/G ',6.164E-6,0.0,0.0,0.0
'CR ',1.73E5,10.,10.,0.0,0.960,0.0
'PRD',24*0.0
'PRD',24*0.0,
'INI',1.0,' ',24*0.0
'INI',1.0,'uCi',1.72E6,6.01E6,6.31E8,4.03E6,1.13E7,3.27E5,0.0,
2.05E7,1.71E7,1.27E9,3.91E6,4.21E7,8.05E5,2.76E6,
7.02E8,2.77E8,1.05E9,1.55E8,6.06E8,5*0.0
'INI',1.0,' ',24*0.0
'TIM',1800.,5400.,7200.,14400.,28800.,30600.,86400.,3.456E5,2.592E6
'XPR',9*0.0
'XPR',9*0.0
'XPR',50.0,1.0,3*104.,2800.,3*50.
'XRM',9*0.0
'XRM',5*1.0,4*0.0
'XRM',50.0,1.0,3*104.,2800.,3*50.
'XRF',9*0.0
'XRF',9*0.0
'XRF',2*0.0,3*1.0,4*0.0
'XOQEB',3*1.04,6*0.0
'XBREB',3*1.0,6*0.0
'XOQLZ',5*6.04,2*4.33,2.10,0.744
'XBRLZ',9*1.0
'XOQ',5*2.43,2*1.22,0.890,0.626
'XBR',9*1.0
'OCC',7*1.0,0.6,0.4
```

TRAILS_PC -- Transport of Radioactive Material in Linear Systems, V1.0a
FRP - for CR, EAB & LPZ Dose (SA Case 2) [SA2FRP14_5.in] (1/01)

***PROGENY INGROWTH ON ***

	COMP: not used	COMP: Affected S/G	COMP: Control Room VOLUME: 1.730E+05 Cu.Ft.
INITIAL:	0.000E+00 Kr-83m	1.720E+06 Kr-83m uCi	0.000E+00 Kr-83m
	0.000E+00 Kr-85m	6.010E+06 Kr-85m	0.000E+00 Kr-85m
	0.000E+00 Kr-85	6.310E+08 Kr-85	0.000E+00 Kr-85
	0.000E+00 Kr-87	4.030E+06 Kr-87	0.000E+00 Kr-87
	0.000E+00 Kr-88	1.130E+07 Kr-88	0.000E+00 Kr-88
	0.000E+00 Kr-89	3.270E+05 Kr-89	0.000E+00 Kr-89
	0.000E+00 Xe-131m	2.050E+07 Xe-131m	0.000E+00 Xe-131m
	0.000E+00 Xe-133m	1.710E+07 Xe-133m	0.000E+00 Xe-133m
	0.000E+00 Xe-133	1.270E+09 Xe-133	0.000E+00 Xe-133
	0.000E+00 Xe-135m	3.910E+06 Xe-135m	0.000E+00 Xe-135m
	0.000E+00 Xe-135	4.210E+07 Xe-135	0.000E+00 Xe-135
	0.000E+00 Xe-137	8.050E+05 Xe-137	0.000E+00 Xe-137
	0.000E+00 Xe-138	2.760E+06 Xe-138	0.000E+00 Xe-138
	0.000E+00 I-131	7.020E+08 I-131	0.000E+00 I-131
	0.000E+00 I-132	2.770E+08 I-132	0.000E+00 I-132
	0.000E+00 I-133	1.050E+09 I-133	0.000E+00 I-133
	0.000E+00 I-134	1.550E+08 I-134	0.000E+00 I-134
	0.000E+00 I-135	6.060E+08 I-135	0.000E+00 I-135
ACT MULT (to uCi):	1.000E+00	1.000E+00	1.000E+00

TRAILS_PC -- Transport of Radioactive Material in Linear Systems, v1.0a
FRP - for CR, EAB & LPZ Dose (SA Case 2) [SA2FRP14_5.in] (1/01)

***PROGENY INGROWTH ON ***

REMOVAL:	0.000E+00 1/sec	6.164E-06 1/sec	1.000E+01 cfm
NUC Grp 1 REL FR:	0.000E+00	0.000E+00	INTAKE REDUCT: 0.000E+00
NUC Grp 2 REL FR:	0.000E+00	0.000E+00	INTAKE REDUCT: 9.600E-01
NUC Grp 3 REL FR:	0.000E+00	0.000E+00	INTAKE REDUCT: 0.000E+00

MULTIPLIERS====>

STEP	TIME	XPR	XREM	XRF	XPR	XREM	XRF	XPR	XREM	XRF
1	1.800E+03	0.00	0.00	0.00	0.00	1.00	0.00	50.0	50.0	0.00
2	5.400E+03	0.00	0.00	0.00	0.00	1.00	0.00	1.00	1.00	0.00
3	7.200E+03	0.00	0.00	0.00	0.00	1.00	0.00	104.	104.	1.00
4	1.440E+04	0.00	0.00	0.00	0.00	1.00	0.00	104.	104.	1.00
5	2.880E+04	0.00	0.00	0.00	0.00	1.00	0.00	104.	104.	1.00
6	3.060E+04	0.00	0.00	0.00	0.00	0.00	0.00	2.800E+03	2.800E+03	0.00
7	8.640E+04	0.00	0.00	0.00	0.00	0.00	0.00	50.0	50.0	0.00
8	3.456E+05	0.00	0.00	0.00	0.00	0.00	0.00	50.0	50.0	0.00
9	2.592E+06	0.00	0.00	0.00	0.00	0.00	0.00	50.0	50.0	0.00

	-------- CONTROL ROOM --------			--- EXCLUSION AREA BOUNDARY ---		--- LOW POPULATION ZONE ---	
	X/Q s/M3	Breathing M3/s	Occupancy	X/Q s/M3	Breathing M3/s	X/Q s/M3	Breathing M3/s
	1.000E-03	3.470E-04	1.000E+00	1.000E-03	3.470E-04	1.000E-05	3.470E-04

MULTIPLIERS====>

STEP	TIME,s							
1	1.800E+03	2.43	1.00	1.00	1.04	1.00	6.04	1.00
2	5.400E+03	2.43	1.00	1.00	1.04	1.00	6.04	1.00
3	7.200E+03	2.43	1.00	1.00	1.04	1.00	6.04	1.00
4	1.440E+04	2.43	1.00	1.00	0.00	0.00	6.04	1.00
5	2.880E+04	2.43	1.00	1.00	0.00	0.00	6.04	1.00
6	3.060E+04	1.22	1.00	1.00	0.00	0.00	4.33	1.00
7	8.640E+04	1.22	1.00	1.00	0.00	0.00	4.33	1.00
8	3.456E+05	0.890	1.00	0.600	0.00	0.00	2.10	1.00
9	2.592E+06	0.626	1.00	0.400	0.00	0.00	0.744	1.00

TRAILS_PC -- Transport of Radioactive Material in Linear Systems, v1.0a
FRP - for CR, EAB & LPZ Dose (SA Case 2) [SA2FRP14_5.in] (1/01)

***PROGENY INGROWTH ON ***

STEP	TIME	not used CURRENT uCi	INTEGRD uCi-sec	Affected S/G CURRENT uCi	INTEGRD uCi-sec	AVERAGE RELEASED uCi	AVERAGE RELEASE uCi/sec	CONTROL ROOM CURRENT uCi	CONTROL ROOM CURRENT uCi/cc	CONTROL ROOM INTEGRD uCi-sec
Kr-83m	INITIAL	0.000E+00		1.720E+06				0.000E+00		
Kr-83m	TOTALS		0.000E+00		1.548E+10	9.134E+04				3.148E+05
Kr-85m	INITIAL	0.000E+00		6.010E+06				0.000E+00		
Kr-85m	TOTALS		0.000E+00		1.266E+11	5.708E+05				2.904E+06
Kr-85	INITIAL	0.000E+00		6.310E+08				0.000E+00		
Kr-85	TOTALS		0.000E+00		1.367E+15	1.026E+08				6.791E+08
Kr-87	INITIAL	0.000E+00		4.030E+06				0.000E+00		
Kr-87	TOTALS		0.000E+00		2.559E+10	1.560E+05				4.077E+05
Kr-88	INITIAL	0.000E+00		1.130E+07				0.000E+00		
Kr-88	TOTALS		0.000E+00		1.544E+11	8.299E+05				3.614E+06
Kr-89	INITIAL	0.000E+00		3.270E+05				0.000E+00		
Kr-89	TOTALS		0.000E+00		8.930E+07	5.504E+02				8.526E+01
Xe-131m	INITIAL	0.000E+00		2.050E+07				0.000E+00		
Xe-131m	TOTALS		0.000E+00		2.499E+13	3.315E+06				2.185E+07
Xe-133m	INITIAL	0.000E+00		1.710E+07				0.000E+00		
Xe-133m	TOTALS		0.000E+00		6.683E+12	2.867E+06				1.868E+07
Xe-133	INITIAL	0.000E+00		1.270E+09				0.000E+00		
Xe-133	TOTALS		0.000E+00		7.815E+14	2.055E+08				1.349E+09
Xe-135m	INITIAL	0.000E+00		3.910E+06				0.000E+00		
Xe-135m	TOTALS		0.000E+00		3.041E+12	1.078E+07				1.957E+07
Xe-135	INITIAL	0.000E+00		4.210E+07				0.000E+00		
Xe-135	TOTALS		0.000E+00		1.936E+13	2.336E+07				1.510E+08
Xe-137	INITIAL	0.000E+00		8.050E+05				0.000E+00		
Xe-137	TOTALS		0.000E+00		2.663E+08	1.642E+03				3.068E+02
Xe-138	INITIAL	0.000E+00		2.760E+06				0.000E+00		
Xe-138	TOTALS		0.000E+00		3.351E+09	2.065E+04				1.122E+04
I-131	INITIAL	0.000E+00		7.020E+08				0.000E+00		
I-131	TOTALS		0.000E+00		5.463E+14	1.126E+08				8.623E+07

TRAILS_PC -- Transport of Radioactive Material in Linear Systems, v1.0a
FRP - for CR, EAB & LPZ Dose (SA Case 2) [SA2FRP14_5.in] (1/01)

***PROGENY INGROWTH ON ***

STEP	TIME	not used CURRENT uCi	INTEGRD uCi-sec	Affected S/G CURRENT uCi	INTEGRD uCi-sec	AVERAGE RELEASED uCi	RELEASE uCi/sec	CONTROL ROOM CURRENT uCi	CURRENT uCi/cc	INTEGRD uCi-sec
I-132	INITIAL	0.000E+00		2.770E+08				0.000E+00		
I-132	TOTALS		0.000E+00		3.099E+12	1.757E+07				1.420E+07
I-133	INITIAL	0.000E+00		1.050E+09				0.000E+00		
I-133	TOTALS		0.000E+00		9.717E+13	1.505E+08				1.159E+08
I-134	INITIAL	0.000E+00		1.550E+08				0.000E+00		
I-134	TOTALS		0.000E+00		6.865E+11	4.225E+06				3.375E+06
I-135	INITIAL	0.000E+00		6.060E+08				0.000E+00		
I-135	TOTALS		0.000E+00		1.849E+13	6.754E+07				5.279E+07

TRAILS_PC -- Transport of Radioactive Material in Linear Systems, v1.0a
FRP - for CR, EAB & LPZ Dose (SA Case 2) [SA2FRP14_5.in] (1/01)

***PROGENY INGROWTH ON ***

	- EXCLUSION AREA BOUNDARY -			--- LOW POPULATION ZONE ---			---------- CONTROL ROOM ----------			
	EDE DOSE mrem	SKIN-DE DOSE mrem	THY-CDE DOSE mrem	EDE DOSE mrem	SKIN-DE DOSE mrem	THY-CDE DOSE mrem	EDE DOSE mrem	EDE RATE DOSE RATE mrem/h	SKIN-DE DOSE mrem	THY-CDE DOSE mrem
Kr-83m TOTALS	8.11E-07	0.00E+00	0.00E+00	8.20E-08	0.00E+00	0.00E+00	4.80E-08		0.00E+00	0.00E+00
Kr-85m TOTALS	6.05E-03	1.19E-02	0.00E+00	8.93E-04	1.76E-03	0.00E+00	7.71E-04		3.03E-02	0.00E+00
Kr-85 TOTALS	1.01E-02	1.42E+00	0.00E+00	2.20E-03	3.08E-01	0.00E+00	2.48E-03		6.89E+00	0.00E+00
Kr-87 TOTALS	1.58E-02	3.74E-02	0.00E+00	1.33E-03	3.17E-03	0.00E+00	5.93E-04		2.80E-02	0.00E+00
Kr-88 TOTALS	1.45E-01	3.19E-02	0.00E+00	1.80E-02	3.95E-03	0.00E+00	1.33E-02		5.82E-02	0.00E+00
Kr-89 TOTALS	1.84E-04	2.00E-04	0.00E+00	1.07E-05	1.16E-05	0.00E+00	2.82E-07		6.09E-06	0.00E+00
Xe-131m TOTALS	1.26E-03	1.39E-02	0.00E+00	2.72E-04	3.01E-03	0.00E+00	3.04E-04		6.71E-02	0.00E+00
Xe-133m TOTALS	3.68E-03	2.45E-02	0.00E+00	8.18E-04	5.44E-03	0.00E+00	9.05E-04		1.20E-01	0.00E+00
Xe-133 TOTALS	3.20E-01	6.05E-01	0.00E+00	6.93E-02	1.31E-01	0.00E+00	7.72E-02		2.91E+00	0.00E+00
Xe-135m TOTALS	2.31E-01	7.35E-02	0.00E+00	4.43E-02	1.41E-02	0.00E+00	1.37E-02		8.65E-02	0.00E+00
Xe-135 TOTALS	1.40E-01	2.27E-01	0.00E+00	5.61E-02	9.13E-02	0.00E+00	6.15E-02		1.99E+00	0.00E+00
Xe-137 TOTALS	5.17E-05	7.83E-04	0.00E+00	3.00E-06	4.55E-05	0.00E+00	9.53E-08		2.87E-05	0.00E+00
Xe-138 TOTALS	4.25E-03	3.17E-03	0.00E+00	2.48E-04	1.84E-04	0.00E+00	2.29E-05		3.39E-04	0.00E+00
I-131 TOTALS	1.91E+00	1.01E+00	1.18E+04	4.12E-01	2.17E-01	2.55E+03	5.36E-02		5.62E-01	6.60E+03

TRAILS_PC -- Transport of Radioactive Material in Linear Systems, v1.0a
FRP - for CR, EAB & LPZ Dose (SA Case 2) [SA2FRP14_5.in] (1/01)

***PROGENY INGROWTH ON ***

	- EXCLUSION AREA BOUNDARY -			--- LOW POPULATION ZONE ---			---------- CONTROL ROOM ----------			
	EDE DOSE mrem	SKIN-DE DOSE mrem	THY-CDE DOSE mrem	EDE DOSE mrem	SKIN-DE DOSE mrem	THY-CDE DOSE mrem	EDE DOSE mrem	EDE RATE DOSE RATE mrem/h	SKIN-DE DOSE mrem	THY-CDE DOSE mrem
I-132										
TOTALS	3.56E+00	1.05E+00	2.10E+01	4.01E-01	1.19E-01	2.37E+00	5.50E-02		3.24E-01	6.48E+00
I-133										
TOTALS	4.46E+00	4.14E+00	2.87E+03	8.84E-01	8.21E-01	5.68E+02	1.16E-01		2.14E+00	1.48E+03
I-134										
TOTALS	1.54E+00	5.07E-01	1.31E+00	1.11E-01	3.66E-02	9.48E-02	1.51E-02		9.88E-02	2.56E-01
I-135										
TOTALS	6.53E+00	1.98E+00	2.68E+02	1.08E+00	3.26E-01	4.43E+01	1.43E-01		8.62E-01	1.17E+02
ALL NUCLIDES										
0.5000 h	5.40E+00	3.02E+00	3.84E+03	3.13E-01	1.75E-01	2.23E+02	2.59E-02	1.01E-01	2.92E-01	3.78E+02
1.5000 h	9.36E+00	5.54E+00	7.49E+03	5.44E-01	3.22E-01	4.35E+02	9.46E-02	8.93E-02	1.11E+00	1.51E+03
2.0000 h	4.12E+00	2.57E+00	3.65E+03	2.39E-01	1.49E-01	2.12E+02	4.31E-02	8.32E-02	6.26E-01	7.25E+02
4.0000 h	0.00E+00	0.00E+00	0.00E+00	8.08E-01	5.41E-01	8.14E+02	1.47E-01	6.71E-02	3.70E+00	2.32E+03
8.0000 h	0.00E+00	0.00E+00	0.00E+00	1.18E+00	8.95E-01	1.48E+03	2.35E-01	5.49E-02	1.00E+01	3.17E+03
8.5000 h	0.00E+00	0.00E+00	0.00E+00	0.00E+00	0.00E+00	0.00E+00	5.55E-03	4.10E-04	2.75E-01	6.86E+01
24.0000 h	0.00E+00	0.00E+00	0.00E+00	0.00E+00	0.00E+00	0.00E+00	1.81E-03	1.59E-05	1.05E-01	2.69E+01
96.0000 h	0.00E+00	0.00E+00	0.00E+00	0.00E+00	0.00E+00	0.00E+00	4.90E-05	2.78E-11	3.92E-03	1.04E+00
720.0000 h	0.00E+00	0.00E+00	0.00E+00	0.00E+00	0.00E+00	0.00E+00	6.20E-11	0.00E+00	8.19E-09	1.85E-06
TOTALS	1.89E+01	1.11E+01	1.50E+04	3.08E+00	2.08E+00	3.16E+03	5.53E-01		1.62E+01	8.20E+03

Unit 1 Concurrent Iodine Spike Addendum

This addendum is valid for total T.S. operational leakage (identified and unidentified leakage). Iodine DCFs are taken from Federal Guidance Report No 11. and are consistent with ICRP 26/30 methodology.

This addendum provides references, inputs, assumptions and calculation for the concurrent iodine spike postulated to occur coincident with certain design basis accidents (DBA). **The analyst should ensure that the inputs and assumptions used herein are valid and applied in the limiting direction when used in any particular DBA analysis.** The calculation is included below as an embedded EXCEL 95 spreadsheet. Any modification or change requires hand checking of the math as this spreadsheet is not subject to the SQA program of REAP 1.104. The methodology is identical to that of ERS-SFL-96-011 and -012. Significant changes were made to the RCS mass, RCS Tech. Spec. leak rate and letdown (purification) flow, and the final appearance rates are, therefore, changed.

Input Parameters/Assumptions:

RCS Tech. Spec. leakage_____1 gpm unidentified leakage + 10 gpm identified leakage = 11 gpm (used 1 gm/cc for density conversion consistent with leak rate determination methodology) (ref. Unit 1 T. S. 3.4.6.2) NOTE: Includes T/S primary to secondary leakage.

RCS Mass_____The RCS mass is calculated from the following component volumes provided in EM No.: 116251 and RCS Density @ 576.6 °F provided in EM No.: 116252.

RCS excluding PZR, 0% S/G plgd -	8099 ft^3	PZR water @ 100% power -	708 ft^3
RCS excluding PZR, 30% S/G plgd -	7127 ft^3	PZR water @ 0% power -	340 ft^3
Main RCS Density @ 576.6 °F -	44.13 lb/ft^3		

Purification efficiency (PE)_____1 is used in this calculation. 0.9 was used previously based on a DF = 10 for iodine.(ref. Westinghouse letter DMW 4704, 1982 as used in SWEC 12241-UR(B)-224, and Unit 1 UFSAR Table 14B-5) Note: purification efficiency (PF) = 1 - 1/DF. The actual DF is much higher, possibly 1000 to 10000, which results in a PE = 0.999 to 0.9999. Since the actual DF is unknown, assuming the PE = 1 bounds the calculation.

Purification flow rate_____120 gpm is used to bound calculation (the maximum given in EM No. 117705).

Iodine decay constants_____

I-131	9.9783E-7 sec^{-1}
I-132	8.3713E-5 sec^{-1}
I-133	9.2568E-6 sec^{-1}
I-134	2.1963E-4 sec^{-1}
I-135	2.9129E-5 sec^{-1}

(ref. ERS-SFL-93-018)

Formula for iodine loss constant_____ $\lambda = (F*E/M) + (L/M) + \lambda_{decay}$
(ref. EPRI Report, Review of Iodine Spike Data from PWR Power Plants in Relation to SGTR with MSLB, TR-103680)

Formula for iodine spike____Appearance rate = Equilibrium Concentration * M * λ
(ref. EPRI Report, Review of Iodine Spike Data from PWR Power Plants in Relation to SGTR with MSLB, TR-103680

Concurrent Iodine Spike Appearance Rates

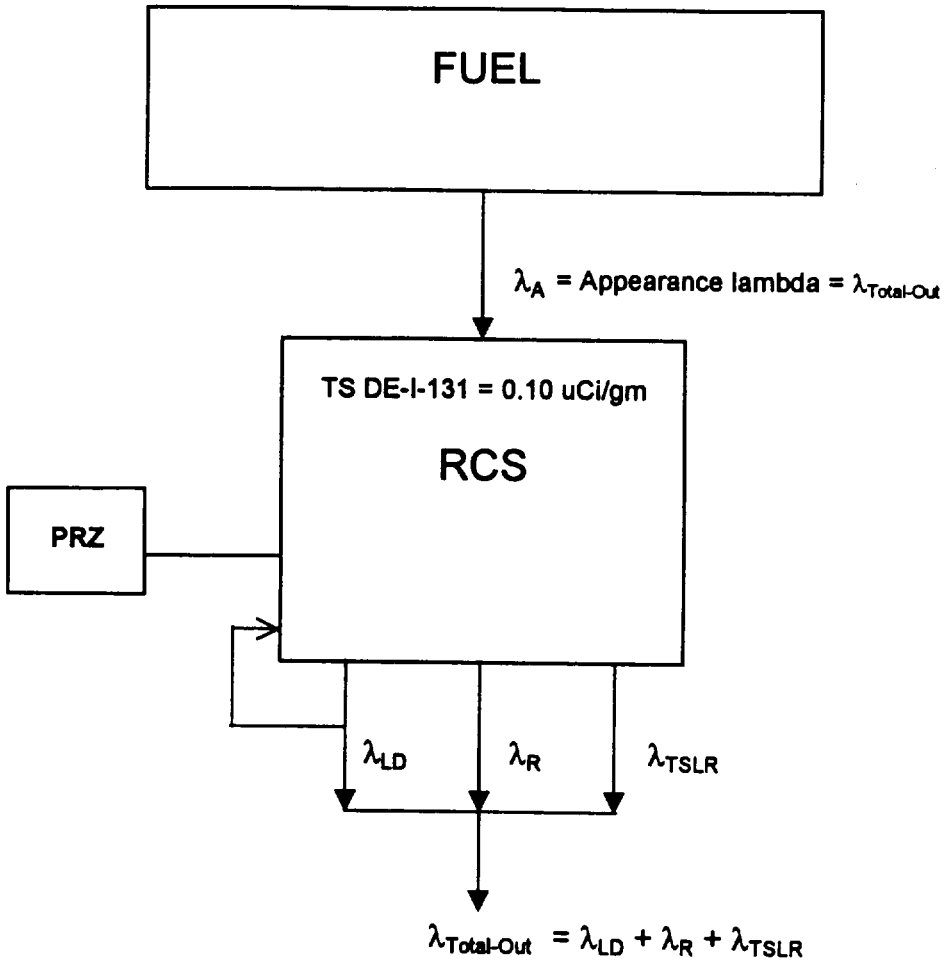

λ_R = removal via (radiological) decay = ln(2) / $t_{1/2}$

λ_{LD} = removal via letdown flow = LD x E / RCS Mass

where: LD = 120 gpm (max), RCS Mass depends on % power, % S/G plugged and

where: E = purification efficiency = 1 - 1/DF, where:

DF = Decontamination Factor, = infinity for Iodine; E = 1 - 1/infinity = 1

λ_{TSLR} = removal via Technical Specification Leakrate = TSLR / RCS Mass, where:

TSLR = identified (included primary-to-secondary) + unidentified = 11 gpm

Concurrent Iodine Spike Appearance Rate = TS DE-I-131 x RCS Mass x λ_A

Concurrent Iodine Spike Appearance Rate Calculation
Sensitivity Analysis Case 2: 0% Power, 30% S/G Plgd

RCS Iodine Concentration (uCi/gm) @ 0.10 uCi/gm Dose Equivalent Iodine 131:

	Thyroid DCF * (Sv/Bq)	X Conversion (mrem/uCi)/(Sv/Bq)	= (mrem/uCi)	X 1% FF (uCi/gm)	= 1% FF iodine dose (mrem/gm)
I-131	2.92E-07	3.70E+09	1.08E+03	2.69E+00	2.91E+03
I-132	1.74E-09	3.70E+09	6.44E+00	1.06E+00	6.82E+00
I-133	4.86E-08	3.70E+09	1.80E+02	4.03E+00	7.25E+02
I-134	2.88E-10	3.70E+09	1.07E+00	5.94E-01	6.33E-01
I-135	8.46E-09	3.70E+09	3.13E+01	2.32E+00	7.26E+01
					3.71E+03

* ref. Federal Guidance Report No. 11

				/ Iodine 131 DCF (mrem/uCi)	= @ 1% FF DE I-131(uCi/gm)
			3.71E+03	1.08E+03	3.435
	1% FF (uCi/gm)	/ 1% FF DE 1-131 (uCi/gm)	= DE I-131 1 (uCi/gm)	X	= RCS I @ 0.10 DE-I131 (uCi/gm)
I-131	2.69E+00	3.435	7.83E-01	0.10	7.83E-02
I-132	1.06E+00	3.435	3.09E-01	0.10	3.09E-02
I-133	4.03E+00	3.435	1.17E+00	0.10	1.17E-01
I-134	5.94E-01	3.435	1.73E-01	0.10	1.73E-02
I-135	2.32E+00	3.435	6.75E-01	0.10	6.75E-02

Concurrent Iodine Spike Appearance Rate:

L (RCS TS leakage) =			F (purif flow rate) =		
	x	=		x	=
(gpm)	(gm/gal)	(gm/min)	(gal/min)	(gm/gal)	(gm/min)
11	3785.3	4.1638E+04	120	3785.3	4.5424E+05

RCS mass, 0% Power, 30% S/G plgd =					E (purification efficiency)
	x	=	x	=	
(ft^3)	(lb/ft^3)*	(lbm)	(gm/lbm)	(gm)	(-)
7467	44.13	3.30E+05	453.592	1.4947E+08	1

*Main RCS Density at 576 °F (EM No.:116252)

Net lambda (all lambda's in sec^{-1}, 60 sec/min)		+	+	=
	=(F*E)/M	=L/M	Decay	Net Lambda
I-131	5.0651E-05	4.6430E-06	9.9783E-07	5.6291E-05
I-132	5.0651E-05	4.6430E-06	8.3713E-05	1.3901E-04
I-133	5.0651E-05	4.6430E-06	9.2568E-06	6.4550E-05
I-134	5.0651E-05	4.6430E-06	2.1963E-04	2.7492E-04
I-135	5.0651E-05	4.6430E-06	2.9129E-05	8.4423E-05

Appearance rate		X	X	=	=
	conc @ 0.10 (uCi/gm)	M (gm)	net lambda (sec^{-1})	@ 0.10 uCi/gm (uCi/sec)	RATE x 500 (Ci/sec)
I-131	7.83E-02	1.49E+08	5.6291E-05	6.5892E+02	3.29E-01
I-132	3.09E-02	1.49E+08	1.3901E-04	6.4118E+02	3.21E-01
I-133	1.17E-01	1.49E+08	6.4550E-05	1.1320E+03	5.66E-01
I-134	1.73E-02	1.49E+08	2.7492E-04	7.1061E+02	3.55E-01
I-135	6.75E-02	1.49E+08	8.4423E-05	8.5228E+02	4.26E-01

Unit 1 Main Steam Line Break With Reduced Letdown Flow

This Appendix documents the Unit 1 Main Steam Line Break radiological analysis described in the main body of this calculation package with the effects associated with the Chemical and Volume Control System letdown flow rate reduced and controlled at ≤80 gpm. When controlled within this value, the reduced RCS clean-up will cause the RCS liquid iodine concentration to increase with a given iodine leakage rate from failed fuel, as compared to higher letdown flow rates. Lowering the letdown flow rate effectively limits the allowable iodine leakage rate because of the Technical Specification limit on RCS dose equivalent iodine 131 specific activity.

The iodine leakage rate during steady-state operation is used as the basis for calculating the magnitude of the assumed concurrent iodine spike. The leakage rate during steady state is increased by a factor of 500, and this new rate is the assumed spike leakage rate. Thus, by reducing the allowable steady-state and spike leak rates, the analysis accident dose is reduced.

In the Main Steam Line Break radiological consequence analysis, reducing the letdown flow and iodine spike rates will affect the FRC and ITC cases only, as only these include the concurrent iodine spike. This Appendix provides the analysis of the maximized accident-induced primary-to-secondary leakage when letdown flow is limited to ≤80 gpm. Additionally, when this leakage increases, the FRP case is affected, and so it is also included in this Appendix.

The methodology, assumptions and input data provided in the main body of this calculation remain unchanged with the following exceptions:

2.1 FRP, FRC

Release rate based on rupture primary-to-secondary leak rate. Total leak rate includes accident induced plus allowable pre-accident leakage as permitted by facility Technical Specifications. Using sensitivity analysis not included in this calculation package, 20.5 gpm accident induced leakage, in combination with the other limiting operating and design parameters, has been determined to be the maximum accident primary-to-secondary leak rate that will maintain the accident doses within acceptable limits. The results for the bounding case of 0% power, 30% plugging are listed in the tables below.

NOTE: For the FRC case the RCS mass values used exclude pressurizer volume since in the first 4 hours post accident, when the concurrent iodine spike occurs, the pressurizer volume is assumed to not equilibrate with the remaining RCS volume.

FRC Release Rate Constant:

$$\lambda = \frac{(20.5\ gal/\min + (150\ gal/d\ /\ 1440 \min/d)) * 37853\ cc/gal * 1\ g/cc}{(7127\ ft^3 * 44.13\ lbm/ft^3) * 453.592\ g/lbm * 60\ s/\min} = 9.112E-06\ s^{-1}$$

FRP Release Rate Constant:

$$\lambda = \frac{(20.5\ gal/\min + (150\ gal/d\ /\ 1440 \min/d)) * 37853\ cc/gal * 1\ g/cc}{(7467\ ft^3 * 44.13\ lbm/ft^3) * 453.592\ g/lbm * 60\ s/\min} = 8.697E-06\ s^{-1}$$

2.2 Concurrent Iodine Spike Rate (μCi/sec) [Calculated – See following page]

RESULTS - USING RESTRICTED LETDOWN FLOW RATE OF ≤80 GPM

The TRAILSPC input and output files are provided as part of this Appendix, and the dose results summarized below.

Control Room Doses

Co-incident Spike				Pre-incident Spike			
Case	Thyroid CDE (mrem)	External EDE (mrem)	Skin DE (mrem)	Case	Thyroid CDE (mrem)	External EDE (mrem)	Skin DE (mrem)
ASA	2.41E+00	7.78E-05	9.50E-04	ASA	2.41E+00	7.78E-05	9.50E-04
FLI	2.06E+03	6.56E-02	7.59E-01	FLI	2.06E+03	6.56E-02	7.59E-01
ILI	1.49E+01	4.85E-04	6.40E-03	ILI	1.49E+01	4.85E-04	6.40E-03
ITN	0.00E+00	1.65E-03	1.62E-01	ITN	0.00E+00	1.65E-03	1.62E-01
ITC	3.01E+01	2.88E-03	2.62E-02	ITP	8.02E+01	4.17E-03	4.32E-02
FRC	1.90E+04	2.02E+00	3.92E+01	FRP	1.14E+04	7.66E-01	2.21E+01
Total:	2.11E+04	2.09E+00	4.02E+01	Total:	1.36E+04	8.38E-01	2.31E+01

EAB 0 - 2 hour Doses

Co-incident Spike				Pre-incident Spike			
Case	Thyroid CDE (mrem)	External EDE (mrem)	Skin DE (mrem)	Case	Thyroid CDE (mrem)	External EDE (mrem)	Skin DE (mrem)
ASA	1.69E+00	1.28E-03	7.29E-04	ASA	1.69E+00	1.28E-03	7.29E-04
FLI	1.44E+03	1.08E+00	5.84E-01	FLI	1.44E+03	1.08E+00	5.84E-01
ILI	2.94E+01	2.04E-02	1.14E-02	ILI	2.94E+01	2.04E-02	1.14E-02
ITN	0.00E+00	8.41E-03	3.29E-02	ITN	0.00E+00	8.41E-03	3.29E-02
ITC	7.64E+01	2.28E-01	8.91E-02	ITP	1.11E+02	1.45E-01	6.86E-02
FRC	2.82E+04	7.84E+01	3.41E+01	FRP	2.10E+04	2.64E+01	1.56E+01
Total:	2.97E+04	7.97E+01	3.48E+01	Total:	2.26E+04	2.77E+01	1.63E+01

LPZ 0 - 30 days Doses

Co-incident Spike				Pre-incident Spike			
Case	Thyroid CDE (mrem)	External EDE (mrem)	Skin DE (mrem)	Case	Thyroid CDE (mrem)	External EDE (mrem)	Skin DE (mrem)
ASA	9.81E-02	7.46E-05	4.23E-05	ASA	9.81E-02	7.46E-05	4.23E-05
FLI	8.37E+01	6.29E-02	3.39E-02	FLI	8.37E+01	6.29E-02	3.39E-02
ILI	5.11E+00	3.03E-03	1.81E-03	ILI	5.11E+00	3.03E-03	1.81E-03
ITN	0.00E+00	1.61E-03	7.37E-03	ITN	0.00E+00	1.61E-03	7.37E-03
ITC	6.22E+00	1.62E-02	6.56E-03	ITP	6.81E+00	8.73E-03	4.16E-03
FRC	1.75E+04	3.20E+01	1.49E+01	FRP	4.31E+03	4.22E+00	2.84E+00
Total:	1.76E+04	3.21E+01	1.49E+01	Total:	4.41E+03	4.30E+00	2.89E+00

CONCLUSION - USING RESTRICTED LETDOWN FLOW RATE OF ≤80 GPM

The analysis in this Appendix has established that the maximum primary-to-secondary leak rate that could be tolerated during a MSLB outside of containment is 20.6042 gpm (20.5 gpm accident induced + 150 gpd Technical Specification limit) if the RCS specific activity is maintained ≤0.10 μCi/gm DE I-131 and secondary liquid specific activity is maintained ≤0.05 μCi/gm DE I-131, AND letdown flow rate is restricted to ≤80 gpm. The EAB thyroid dose remains limiting.

Offsite doses are a small fraction of the applicable regulatory limits of 10 CFR 100.11[48] of 300 rem thyroid and 25 rem whole body, and are less than the more restrictive guidance criteria in the Standard Review Plan[2] of 30 rem thyroid and 2.5 rem whole body. Control room operator doses are less than the 10 CFR 50[49] criteria of 5 rem whole body or its equivalent to any part of the body.

The bounding doses for the main steam line break design basis accident at Beaver Valley Unit 1 are represented by the event that includes the design basis co-incident iodine spike. These values, reported consistent with the above guidance and UFSAR reporting past practice, are:

Co-incident Iodine Spike Analysis Summary:

	Thyroid CDE (rem)	EDE (rem)	Skin DE (rem)
Control room	2.2E+01	<2E-01	<1E+00
EAB	3.0E+01	<2E-01	N/A
LPZ	1.8E+01	<2E-01	N/A

The doses for the pre-accident iodine spike are all within the above values.

Concurrent Iodine Spike Appearance Rate Calculation
Sensitivity Analysis Case 2: 0% Power, 30% S/G Plgd

RCS Iodine Concentration (uCi/gm) @ 0.10 uCi/gm Dose Equivalent Iodine 131:

	Thyroid DCF * (Sv/Bq)	X Conversion (mrem/uCi)/(Sv/Bq)	= (mrem/uCi)	X 1% FF (uCi/gm)	= 1% FF iodine dose (mrem/gm)
I-131	2.92E-07	3.70E+09	1.08E+03	2.69E+00	2.91E+03
I-132	1.74E-09	3.70E+09	6.44E+00	1.06E+00	6.82E+00
I-133	4.86E-08	3.70E+09	1.80E+02	4.03E+00	7.25E+02
I-134	2.88E-10	3.70E+09	1.07E+00	5.94E-01	6.33E-01
I-135	8.46E-09	3.70E+09	3.13E+01	2.32E+00	7.26E+01
					3.71E+03

* ref. Federal Guidance Report No. 11

				/ Iodine 131 DCF (mrem/uCi)	= @ 1% FF DE I-131(uCi/gm)
			3.71E+03	1.08E+03	3.435
	1% FF (uCi/gm)	/ 1% FF DE 1-131 (uCi/gm)	= DE I-131 @ 1 (uCi/gm)	X	= RCS I @ 0.10 DE-I131 (uCi/gm)
I-131	2.69E+00	3.435	7.83E-01	0.10	7.83E-02
I-132	1.06E+00	3.435	3.09E-01	0.10	3.09E-02
I-133	4.03E+00	3.435	1.17E+00	0.10	1.17E-01
I-134	5.94E-01	3.435	1.73E-01	0.10	1.73E-02
I-135	2.32E+00	3.435	6.75E-01	0.10	6.75E-02

Concurrent Iodine Spike Appearance Rate:

L (RCS TS leakage) =			F (purif flow rate) =		
	x	=		x	=
(gpm)	(gm/gal)	(gm/min)	(gal/min)	(gm/gal)	(gm/min)
11	3785.3	4.1638E+04	80	3785.3	3.0282E+05

RCS mass, 0% Power, 30% S/G plgd =					E (purification efficiency)
	x	=	x	=	
(ft^3)	(lb/ft^3)*	(lbm)	(gm/lbm)	(gm)	(-)
7467	44.13	3.30E+05	453.592	1.4947E+08	1

*Main RCS Density at 576 °F (EM No.:116252)

Net lambda (all lambda's in sec^{-1}, 60 sec/min)		+	+	=
	=(F*E)/M	=L/M	Decay	Net Lambda
I-131	3.3767E-05	4.6430E-06	9.9783E-07	3.9408E-05
I-132	3.3767E-05	4.6430E-06	8.3713E-05	1.2212E-04
I-133	3.3767E-05	4.6430E-06	9.2568E-06	4.7667E-05
I-134	3.3767E-05	4.6430E-06	2.1963E-04	2.5804E-04
I-135	3.3767E-05	4.6430E-06	2.9129E-05	6.7539E-05

Appearance rate		X	X	=	=
	conc @ 0.10 (uCi/gm)	M (gm)	net lambda (sec^{-1})	@ 0.10 uCi/gm (uCi/sec)	RATE x 500 (Ci/sec)
I-131	7.83E-02	1.49E+08	3.9408E-05	4.6129E+02	2.31E-01
I-132	3.09E-02	1.49E+08	1.2212E-04	5.6330E+02	2.82E-01
I-133	1.17E-01	1.49E+08	4.7667E-05	8.3591E+02	4.18E-01
I-134	1.73E-02	1.49E+08	2.5804E-04	6.6697E+02	3.33E-01
I-135	6.75E-02	1.49E+08	6.7539E-05	6.8183E+02	3.41E-01

TRAILSPC Input File For ITC Case

```
'L1 ',10,1.0E-3,3.47E-4,1.0E-5,3.47E-4,1.0,1.0E-3,3.47E-4,1,24,0,2
'ITC - for CR, EAB & LPZ dose (80 gpm letdown) [ITC20_5.in] (1/01) '
'C1 ','not used ',0.0,0.0,0.0,0.0
'C2 ','intact S/G ',9.213E-8,0.0,0.0,0.0
'CR ',1.73E5 ,10.,10.,0.0,0.960,0.0
'PRD',24*0.0
'PRD',14*0.0,2.31E5,2.82E5,4.18E5,3.33E5,3.41E5,5*0.0
'INI',1.0,' ',24*0.0
'INI',1.0,'uCi',14*0.0,1.12E7,4.40E6,1.67E7,2.47E6,9.64E6,5*0.0
'INI',1.0,' ',24*0.0
'TIM',1800.,3600.,5400.,7200.,14400.,28800.,30600.,86400.,3.456E5,2.592E6
'XPR',10*0.0
'XPR',5*1.0,.002,4*0.0
'XPR',50.0,2*1.0,3*104.,2800.,3*50.
'XRM',10*0.0
'XRM',2*1.0,4*0.01,4*0.0
'XRM',50.0,2*1.0,3*104.,2800.,3*50.
'XRF',10*0.0
'XRF',10*0.0
'XRF',3*0.0,3*1.0,4*0.0
'XOQEB',4*1.04,6*0.0
'XBREB',4*1.0,6*0.0
'XOQLZ',6*6.04,2*4.33,2.10,0.744
'XBRLZ',10*1.0
'XOQ',6*2.43,2*1.22,0.890,0.626
'XBR',10*1.0
'OCC',8*1.0,0.6,0.4
```

```
TRAILS_PC -- Transport of Radioactive Material in Linear Systems, V1.0a
 ITC - for CR, EAB & LPZ dose (80 gpm letdown) (ITC20_5.in) (1/01)                    ***PROGENY INGROWTH ON ***

                    COMP: not used                    COMP: intact S/G                    COMP: Control Room
                                                                                       VOLUME: 1.730E+05 Cu.Ft.
                   ---------------------------------------------------------------------------------------------
         INITIAL:   0.000E+00 I-131                   1.120E+07 I-131    uCi              0.000E+00 I-131
                    0.000E+00 I-132                   4.400E+06 I-132                     0.000E+00 I-132
                    0.000E+00 I-133                   1.670E+07 I-133                     0.000E+00 I-133
                    0.000E+00 I-134                   2.470E+06 I-134                     0.000E+00 I-134
                    0.000E+00 I-135                   9.640E+06 I-135                     0.000E+00 I-135
 ACT MULT (to uCi):  1.000E+00                        1.000E+00                           1.000E+00
                   ---------------------------------------------------------------------------------------------
 PRODUCTION,uCi/s:  0.000E+00 I-131                   2.310E+05 I-131                  INTAKE: 1.000E+01 CFM
                    0.000E+00 I-132                   2.820E+05 I-132
                    0.000E+00 I-133                   4.180E+05 I-133
                    0.000E+00 I-134                   3.330E+05 I-134
                    0.000E+00 I-135                   3.410E+05 I-135
```

```
TRAILS_PC -- Transport of Radioactive Material in Linear Systems, V1.0a
 ITC - for CR, EAB & LPZ dose (80 gpm letdown) [ITC20_5.in] (1/01)                    ***PROGENY INGROWTH ON ***

                    COMP: not used                    COMP: intact S/G                        COMP: Control Room
                                                                                        VOLUME: 1.730E+05 Cu.Ft.
                    ---------------------------------------------------------------------------------------------
          INITIAL:  0.000E+00 I-131                   1.120E+07 I-131    uCi                  0.000E+00 I-131
                    0.000E+00 I-132                   4.400E+06 I-132                         0.000E+00 I-132
                    0.000E+00 I-133                   1.670E+07 I-133                         0.000E+00 I-133
                    0.000E+00 I-134                   2.470E+06 I-134                         0.000E+00 I-134
                    0.000E+00 I-135                   9.640E+06 I-135                         0.000E+00 I-135
ACT MULT (to uCi):  1.000E+00                         1.000E+00                               1.000E+00
                    ---------------------------------------------------------------------------------------------
PRODUCTION,uCi/s:   0.000E+00 I-131                   2.310E+05 I-131                       INTAKE: 1.000E+01 CFM
                    0.000E+00 I-132                   2.820E+05 I-132
                    0.000E+00 I-133                   4.180E+05 I-133
                    0.000E+00 I-134                   3.330E+05 I-134
                    0.000E+00 I-135                   3.410E+05 I-135
```

TRAILS_PC -- Transport of Radioactive Material in Linear Systems, v1.0a
ITC - for CR, EAB & LPZ dose (80 gpm letdown) [ITC20_5.in] (1/01) ***PROGENY INGROWTH ON ***

REMOVAL:	0.000E+00 1/sec	9.213E-08 1/sec	1.000E+01 cfm
NUC Grp 1 REL FR:	0.000E+00	0.000E+00	INTAKE REDUCT: 0.000E+00
NUC Grp 2 REL FR:	0.000E+00	0.000E+00	INTAKE REDUCT: 9.600E-01
NUC Grp 3 REL FR:	0.000E+00	0.000E+00	INTAKE REDUCT: 0.000E+00

MULTIPLIERS====>

STEP	TIME	XPR	XREM	XRF	XPR	XREM	XRF	XPR	XREM	XRF
1	1.800E+03	0.00	0.00	0.00	1.00	1.00	0.00	50.0	50.0	0.00
2	3.600E+03	0.00	0.00	0.00	1.00	1.00	0.00	1.00	1.00	0.00
3	5.400E+03	0.00	0.00	0.00	1.00	1.000E-02	0.00	1.00	1.00	0.00
4	7.200E+03	0.00	0.00	0.00	1.00	1.000E-02	0.00	104.	104.	1.00
5	1.440E+04	0.00	0.00	0.00	1.00	1.000E-02	0.00	104.	104.	1.00
6	2.880E+04	0.00	0.00	0.00	2.000E-03	1.000E-02	0.00	104.	104.	1.00
7	3.060E+04	0.00	0.00	0.00	0.00	0.00	0.00	2.800E+03	2.800E+03	0.00
8	8.640E+04	0.00	0.00	0.00	0.00	0.00	0.00	50.0	50.0	0.00
9	3.456E+05	0.00	0.00	0.00	0.00	0.00	0.00	50.0	50.0	0.00
10	2.592E+06	0.00	0.00	0.00	0.00	0.00	0.00	50.0	50.0	0.00

	-------- CONTROL ROOM --------			--- EXCLUSION AREA BOUNDARY ---		--- LOW POPULATION ZONE ---	
	X/Q s/M3	Breathing M3/s	Occupancy	X/Q s/M3	Breathing M3/s	X/Q s/M3	Breathing M3/s
	1.000E-03	3.470E-04	1.000E+00	1.000E-03	3.470E-04	1.000E-05	3.470E-04

MULTIPLIERS====>

STEP	TIME,s						
1	1.800E+03	2.43	1.00	1.00	1.04	1.00	6.04	1.00
2	3.600E+03	2.43	1.00	1.00	1.04	1.00	6.04	1.00
3	5.400E+03	2.43	1.00	1.00	1.04	1.00	6.04	1.00
4	7.200E+03	2.43	1.00	1.00	1.04	1.00	6.04	1.00
5	1.440E+04	2.43	1.00	1.00	0.00	0.00	6.04	1.00
6	2.880E+04	2.43	1.00	1.00	0.00	0.00	6.04	1.00
7	3.060E+04	1.22	1.00	1.00	0.00	0.00	4.33	1.00
8	8.640E+04	1.22	1.00	1.00	0.00	0.00	4.33	1.00
9	3.456E+05	0.890	1.00	0.600	0.00	0.00	2.10	1.00
10	2.592E+06	0.626	1.00	0.400	0.00	0.00	0.744	1.00

TRAILS_PC -- Transport of Radioactive Material in Linear Systems, v1.0a
ITC - for CR, EAB & LPZ dose (80 gpm letdown) [ITC20_5.in] (1/01)

***PROGENY INGROWTH ON ***

STEP	TIME	not used CURRENT uCi	not used INTEGRD uCi-sec	intact S/G CURRENT uCi	intact S/G INTEGRD uCi-sec	RELEASED uCi	AVERAGE RELEASE uCi/sec	CONTROL ROOM CURRENT uCi	CONTROL ROOM CURRENT uCi/cc	CONTROL ROOM INTEGRD uCi-sec
Xe-131m	INITIAL	0.000E+00		0.000E+00				0.000E+00		
Xe-131m	TOTALS		0.000E+00		2.264E+13	6.694E+00				5.535E+01
Xe-133m	INITIAL	0.000E+00		0.000E+00				0.000E+00		
Xe-133m	TOTALS		0.000E+00		1.881E+13	1.608E+02				1.301E+03
Xe-133	INITIAL	0.000E+00		0.000E+00				0.000E+00		
Xe-133	TOTALS		0.000E+00		6.380E+14	2.297E+03				1.875E+04
Xe-135m	INITIAL	0.000E+00		0.000E+00				0.000E+00		
Xe-135m	TOTALS		0.000E+00		2.792E+13	2.834E+04				6.706E+04
Xe-135	INITIAL	0.000E+00		0.000E+00				0.000E+00		
Xe-135	TOTALS		0.000E+00		1.692E+14	2.023E+04				1.535E+05
I-131	INITIAL	0.000E+00		1.120E+07				0.000E+00		
I-131	TOTALS		0.000E+00		3.097E+15	2.058E+05				3.000E+05
I-132	INITIAL	0.000E+00		4.400E+06				0.000E+00		
I-132	TOTALS		0.000E+00		4.866E+13	1.893E+05				1.821E+05
I-133	INITIAL	0.000E+00		1.670E+07				0.000E+00		
I-133	TOTALS		0.000E+00		6.533E+14	3.584E+05				4.975E+05
I-134	INITIAL	0.000E+00		2.470E+06				0.000E+00		
I-134	TOTALS		0.000E+00		2.189E+13	1.742E+05				1.049E+05
I-135	INITIAL	0.000E+00		9.640E+06				0.000E+00		
I-135	TOTALS		0.000E+00		1.692E+14	2.698E+05				3.359E+05

TRAILS_PC -- Transport of Radioactive Material in Linear Systems, v1.0a
ITC - for CR, EAB & LPZ dose (80 gpm letdown) [ITC20_5.in] (1/01)

***PROGENY INGROWTH ON ***

	- EXCLUSION AREA BOUNDARY -			--- LOW POPULATION ZONE ---			---------- CONTROL ROOM ----------			
	EDE DOSE mrem	SKIN-DE DOSE mrem	THY-CDE DOSE mrem	EDE DOSE mrem	SKIN-DE DOSE mrem	THY-CDE DOSE mrem	EDE DOSE mrem	EDE RATE DOSE RATE mrem/h	SKIN-DE DOSE mrem	THY-CDE DOSE mrem
Xe-131m TOTALS	1.92E-09	2.12E-08	0.00E+00	5.49E-10	6.09E-09	0.00E+00	7.71E-10		1.70E-07	0.00E+00
Xe-133m TOTALS	1.69E-07	1.12E-06	0.00E+00	4.59E-08	3.05E-07	0.00E+00	6.30E-08		8.33E-06	0.00E+00
Xe-133 TOTALS	2.82E-06	5.34E-06	0.00E+00	7.75E-07	1.46E-06	0.00E+00	1.07E-06		4.04E-05	0.00E+00
Xe-135m TOTALS	1.27E-03	4.03E-04	0.00E+00	1.17E-04	3.70E-05	0.00E+00	4.68E-05		2.96E-04	0.00E+00
Xe-135 TOTALS	2.02E-04	3.29E-04	0.00E+00	4.85E-05	7.91E-05	0.00E+00	6.26E-05		2.03E-03	0.00E+00
I-131 TOTALS	9.17E-03	4.84E-03	5.67E+01	7.53E-04	3.97E-04	4.66E+00	1.86E-04		1.96E-03	2.30E+01
I-132 TOTALS	6.21E-02	1.83E-02	3.67E-01	4.32E-03	1.28E-03	2.56E-02	7.06E-04		4.15E-03	8.31E-02
I-133 TOTALS	2.62E-02	2.44E-02	1.69E+01	2.10E-03	1.95E-03	1.35E+00	4.96E-04		9.17E-03	6.34E+00
I-134 TOTALS	7.23E-02	2.38E-02	6.15E-02	4.59E-03	1.51E-03	3.91E-03	4.69E-04		3.07E-03	7.95E-03
I-135 TOTALS	5.65E-02	1.71E-02	2.32E+00	4.31E-03	1.30E-03	1.77E-01	9.11E-04		5.49E-03	7.45E-01
ALL NUCLIDES										
0.5000 h	5.92E-02	2.30E-02	1.91E+01	3.44E-03	1.34E-03	1.11E+00	2.77E-04	1.06E-03	2.16E-03	1.87E+00
1.0000 h	1.63E-01	6.38E-02	5.51E+01	9.45E-03	3.71E-03	3.20E+00	5.05E-04	9.64E-04	4.03E-03	3.78E+00
1.5000 h	2.51E-03	9.99E-04	9.09E-01	1.46E-04	5.80E-05	5.28E-02	4.48E-04	8.36E-04	3.70E-03	3.86E+00
2.0000 h	3.27E-03	1.32E-03	1.26E+00	1.90E-04	7.68E-05	7.35E-02	3.61E-04	6.22E-04	3.09E-03	3.51E+00
4.0000 h	0.00E+00	0.00E+00	0.00E+00	1.12E-03	4.69E-04	4.98E-01	7.74E-04	2.32E-04	7.16E-03	9.26E+00
8.0000 h	0.00E+00	0.00E+00	0.00E+00	1.90E-03	9.13E-04	1.29E+00	5.04E-04	7.15E-05	5.93E-03	7.69E+00
8.5000 h	0.00E+00	0.00E+00	0.00E+00	0.00E+00	0.00E+00	0.00E+00	7.20E-06	5.21E-07	1.04E-04	1.14E-01
24.0000 h	0.00E+00	0.00E+00	0.00E+00	0.00E+00	0.00E+00	0.00E+00	2.05E-06	1.39E-08	3.24E-05	4.44E-02
96.0000 h	0.00E+00	0.00E+00	0.00E+00	0.00E+00	0.00E+00	0.00E+00	3.94E-08	1.29E-14	6.69E-07	1.70E-03
720.0000 h	0.00E+00	0.00E+00	0.00E+00	0.00E+00	0.00E+00	0.00E+00	2.84E-14	0.00E+00	3.65E-13	2.96E-09
TOTALS	2.28E-01	8.91E-02	7.64E+01	1.62E-02	6.56E-03	6.22E+00	2.88E-03		2.62E-02	3.01E+01

TRAILSPC Input File For FRC Case

```
'L1 ',9,1.0E-3,3.47E-4,1.0E-5,3.47E-4,1.0,1.0E-3,3.47E-4,1,24,0,2
'FRC - for CR, EAB & LPZ dose (80 gpm letdown) [FRC20_5.in] (1/01) '
'C1 ','not used ',0.0,0.0,0.0,0.0
'C2 ','Affected S/G ',9.112E-6,0.0,0.0,0.0
'CR ',1.73E5,10.,10.,0.0,0.960,0.0
'PRD',24*0.0
'PRD',14*0.0,2.31E5,2.82E5,4.18E5,3.33E5,3.41E5,5*0.0
'INI',1.0,' ',24*0.0
'INI',1.0,'uCi',1.64E6,5.73E6,6.02E8,3.85E6,1.08E7,3.12E5,0.0,
1.95E7,1.63E7,1.21E9,3.73E6,4.02E7,7.68E5,2.64E6,
1.12E7,4.40E6,1.67E7,2.47E6,9.64E6,5*0.0
'INI',1.0,' ',24*0.0
'TIM',1800.,5400.,7200.,14400.,28800.,30600.,86400.,3.456E5,2.592E6
'XPR',9*0.0
'XPR',4*1.0,.002,4*0.0
'XPR',50.0,1.0,3*104.,2800.,3*50.
'XRM',9*0.0
'XRM',5*1.0,4*0.0
'XRM',50.0,1.0,3*104.,2800.,3*50.
'XRF',9*0.0
'XRF',9*0.0
'XRF',2*0.0,3*1.0,4*0.0
'XOQEB',3*1.04,6*0.0
'XBREB',3*1.0,6*0.0
'XOQLZ',5*6.04,2*4.33,2.10,0.744
'XBRLZ',9*1.0
'XOQ',5*2.43,2*1.22,0.890,0.626
'XBR',9*1.0
'OCC',7*1.0,0.6,0.4
```

TRAILS_PC -- Transport of Radioactive Material in Linear Systems, V1.0a
FRC - for CR, EAB & LPZ dose (80 gpm letdown) [FRC20_5.in] (1/01)

***PROGENY INGROWTH ON ***

	COMP: not used	COMP: Affected S/G	COMP: Control Room VOLUME: 1.730E+05 Cu.Ft.
INITIAL:	0.000E+00 Kr-83m	1.640E+06 Kr-83m uCi	0.000E+00 Kr-83m
	0.000E+00 Kr-85m	5.730E+06 Kr-85m	0.000E+00 Kr-85m
	0.000E+00 Kr-85	6.020E+08 Kr-85	0.000E+00 Kr-85
	0.000E+00 Kr-87	3.850E+06 Kr-87	0.000E+00 Kr-87
	0.000E+00 Kr-88	1.080E+07 Kr-88	0.000E+00 Kr-88
	0.000E+00 Kr-89	3.120E+05 Kr-89	0.000E+00 Kr-89
	0.000E+00 Xe-131m	1.950E+07 Xe-131m	0.000E+00 Xe-131m
	0.000E+00 Xe-133m	1.630E+07 Xe-133m	0.000E+00 Xe-133m
	0.000E+00 Xe-133	1.210E+09 Xe-133	0.000E+00 Xe-133
	0.000E+00 Xe-135m	3.730E+06 Xe-135m	0.000E+00 Xe-135m
	0.000E+00 Xe-135	4.020E+07 Xe-135	0.000E+00 Xe-135
	0.000E+00 Xe-137	7.680E+05 Xe-137	0.000E+00 Xe-137
	0.000E+00 Xe-138	2.640E+06 Xe-138	0.000E+00 Xe-138
	0.000E+00 I-131	1.120E+07 I-131	0.000E+00 I-131
	0.000E+00 I-132	4.400E+06 I-132	0.000E+00 I-132
	0.000E+00 I-133	1.670E+07 I-133	0.000E+00 I-133
	0.000E+00 I-134	2.470E+06 I-134	0.000E+00 I-134
	0.000E+00 I-135	9.640E+06 I-135	0.000E+00 I-135
ACT MULT (to uCi):	1.000E+00	1.000E+00	1.000E+00
PRODUCTION, uCi/s:	0.000E+00 I-131	2.310E+05 I-131	INTAKE: 1.000E+01 CFM
	0.000E+00 I-132	2.820E+05 I-132	
	0.000E+00 I-133	4.180E+05 I-133	
	0.000E+00 I-134	3.330E+05 I-134	
	0.000E+00 I-135	3.410E+05 I-135	

TRAILS_PC -- Transport of Radioactive Material in Linear Systems, v1.0a
FRC - for CR, EAB & LPZ dose (80 gpm letdown) [FRC20_5.in] (1/01)

***PROGENY INGROWTH ON ***

REMOVAL:	0.000E+00 1/sec	9.112E-06 1/sec	1.000E+01 cfm
NUC Grp 1 REL FR:	0.000E+00	0.000E+00	INTAKE REDUCT: 0.000E+00
NUC Grp 2 REL FR:	0.000E+00	0.000E+00	INTAKE REDUCT: 9.600E-01
NUC Grp 3 REL FR:	0.000E+00	0.000E+00	INTAKE REDUCT: 0.000E+00

MULTIPLIERS====>

STEP	TIME	XPR	XREM	XRF	XPR	XREM	XRF	XPR	XREM	XRF
1	1.800E+03	0.00	0.00	0.00	1.00	1.00	0.00	50.0	50.0	0.00
2	5.400E+03	0.00	0.00	0.00	1.00	1.00	0.00	1.00	1.00	0.00
3	7.200E+03	0.00	0.00	0.00	1.00	1.00	0.00	104.	104.	1.00
4	1.440E+04	0.00	0.00	0.00	1.00	1.00	0.00	104.	104.	1.00
5	2.880E+04	0.00	0.00	0.00	2.000E-03	1.00	0.00	104.	104.	1.00
6	3.060E+04	0.00	0.00	0.00	0.00	0.00	0.00	2.800E+03	2.800E+03	0.00
7	8.640E+04	0.00	0.00	0.00	0.00	0.00	0.00	50.0	50.0	0.00
8	3.456E+05	0.00	0.00	0.00	0.00	0.00	0.00	50.0	50.0	0.00
9	2.592E+06	0.00	0.00	0.00	0.00	0.00	0.00	50.0	50.0	0.00

	-------- CONTROL ROOM --------			--- EXCLUSION AREA BOUNDARY ---		--- LOW POPULATION ZONE ---	
	X/Q s/M3	Breathing M3/s	Occupancy	X/Q s/M3	Breathing M3/s	X/Q s/M3	Breathing M3/s
	1.000E-03	3.470E-04	1.000E+00	1.000E-03	3.470E-04	1.000E-05	3.470E-04

MULTIPLIERS====>

STEP	TIME,s							
1	1.800E+03	2.43	1.00	1.00	1.04	1.00	6.04	1.00
2	5.400E+03	2.43	1.00	1.00	1.04	1.00	6.04	1.00
3	7.200E+03	2.43	1.00	1.00	1.04	1.00	6.04	1.00
4	1.440E+04	2.43	1.00	1.00	0.00	0.00	6.04	1.00
5	2.880E+04	2.43	1.00	1.00	0.00	0.00	6.04	1.00
6	3.060E+04	1.22	1.00	1.00	0.00	0.00	4.33	1.00
7	8.640E+04	1.22	1.00	1.00	0.00	0.00	4.33	1.00
8	3.456E+05	0.890	1.00	0.600	0.00	0.00	2.10	1.00
9	2.592E+06	0.626	1.00	0.400	0.00	0.00	0.744	1.00

TRAILS_PC -- Transport of Radioactive Material in Linear Systems, v1.0a
FRC - for CR, EAB & LPZ dose (80 gpm letdown) [FRC20_5.in] (1/01) ***PROGENY INGROWTH ON ***

STEP	TIME	not used CURRENT uCi	INTEGRD uCi-sec	Affected S/G CURRENT uCi	INTEGRD uCi-sec	AVERAGE RELEASED uCi	RELEASE uCi/sec	CONTROL ROOM CURRENT uCi	CURRENT uCi/cc	INTEGRD uCi-sec
Kr-83m	INITIAL	0.000E+00		1.640E+06				0.000E+00		
Kr-83m	TOTALS		0.000E+00		1.439E+10	1.259E+05				4.315E+05
Kr-85m	INITIAL	0.000E+00		5.730E+06				0.000E+00		
Kr-85m	TOTALS		0.000E+00		1.152E+11	7.787E+05				3.950E+06
Kr-85	INITIAL	0.000E+00		6.020E+08				0.000E+00		
Kr-85	TOTALS		0.000E+00		1.199E+15	1.389E+08				9.189E+08
Kr-87	INITIAL	0.000E+00		3.850E+06				0.000E+00		
Kr-87	TOTALS		0.000E+00		2.400E+10	2.164E+05				5.626E+05
Kr-88	INITIAL	0.000E+00		1.080E+07				0.000E+00		
Kr-88	TOTALS		0.000E+00		1.425E+11	1.140E+06				4.943E+06
Kr-89	INITIAL	0.000E+00		3.120E+05				0.000E+00		
Kr-89	TOTALS		0.000E+00		8.513E+07	7.757E+02				1.202E+02
Xe-131m	INITIAL	0.000E+00		1.950E+07				0.000E+00		
Xe-131m	TOTALS		0.000E+00		3.699E+13	4.506E+06				2.968E+07
Xe-133m	INITIAL	0.000E+00		1.630E+07				0.000E+00		
Xe-133m	TOTALS		0.000E+00		1.895E+13	4.690E+06				3.045E+07
Xe-133	INITIAL	0.000E+00		1.210E+09				0.000E+00		
Xe-133	TOTALS		0.000E+00		1.129E+15	2.895E+08				1.898E+09
Xe-135m	INITIAL	0.000E+00		3.730E+06				0.000E+00		
Xe-135m	TOTALS		0.000E+00		2.409E+13	1.021E+08				1.577E+08
Xe-135	INITIAL	0.000E+00		4.020E+07				0.000E+00		
Xe-135	TOTALS		0.000E+00		1.418E+14	1.432E+08				8.904E+08
Xe-137	INITIAL	0.000E+00		7.680E+05				0.000E+00		
Xe-137	TOTALS		0.000E+00		2.538E+08	2.313E+03				4.322E+02
Xe-138	INITIAL	0.000E+00		2.640E+06				0.000E+00		
Xe-138	TOTALS		0.000E+00		3.193E+09	2.910E+04				1.583E+04
I-131	INITIAL	0.000E+00		1.120E+07				0.000E+00		
I-131	TOTALS		0.000E+00		2.552E+15	5.890E+08				1.912E+08

TRAILS_PC -- Transport of Radioactive Material in Linear Systems, v1.0a
FRC - for CR, EAB & LPZ dose (80 gpm letdown) [FRC20_5.in] (1/01) ***PROGENY INGROWTH ON ***

STEP	TIME	not used CURRENT uCi	INTEGRD uCi-sec	Affected S/G CURRENT uCi	INTEGRD uCi-sec	AVERAGE RELEASED uCi	RELEASE uCi/sec	CONTROL ROOM CURRENT uCi	CURRENT uCi/cc	INTEGRD uCi-sec
I-132	INITIAL	0.000E+00		4.400E+06				0.000E+00		
I-132	TOTALS		0.000E+00		4.458E+13	3.416E+08				8.372E+07
I-133	INITIAL	0.000E+00		1.670E+07				0.000E+00		
I-133	TOTALS		0.000E+00		5.479E+14	9.762E+08				3.069E+08
I-134	INITIAL	0.000E+00		2.470E+06				0.000E+00		
I-134	TOTALS		0.000E+00		2.103E+13	1.893E+08				3.278E+07
I-135	INITIAL	0.000E+00		9.640E+06				0.000E+00		
I-135	TOTALS		0.000E+00		1.468E+14	6.534E+08				1.911E+08

TRAILS_PC -- Transport of Radioactive Material in Linear Systems, v1.0a
FRC - for CR, EAB & LPZ dose (80 gpm letdown) [FRC20_5.in] (1/01)

***PROGENY INGROWTH ON ***

	- EXCLUSION AREA BOUNDARY -			--- LOW POPULATION ZONE ---			---------- CONTROL ROOM ----------			
	EDE DOSE mrem	SKIN-DE DOSE mrem	THY-CDE DOSE mrem	EDE DOSE mrem	SKIN-DE DOSE mrem	THY-CDE DOSE mrem	EDE DOSE mrem	EDE RATE DOSE RATE mrem/h	SKIN-DE DOSE mrem	THY-CDE DOSE mrem
Kr-83m TOTALS	1.13E-06	0.00E+00	0.00E+00	1.13E-07	0.00E+00	0.00E+00	6.58E-08		0.00E+00	0.00E+00
Kr-85m TOTALS	8.44E-03	1.67E-02	0.00E+00	1.22E-03	2.40E-03	0.00E+00	1.05E-03		4.12E-02	0.00E+00
Kr-85 TOTALS	1.41E-02	1.98E+00	0.00E+00	2.98E-03	4.17E-01	0.00E+00	3.35E-03		9.32E+00	0.00E+00
Kr-87 TOTALS	2.21E-02	5.23E-02	0.00E+00	1.85E-03	4.39E-03	0.00E+00	8.18E-04		3.86E-02	0.00E+00
Kr-88 TOTALS	2.03E-01	4.46E-02	0.00E+00	2.47E-02	5.43E-03	0.00E+00	1.82E-02		7.96E-02	0.00E+00
Kr-89 TOTALS	2.60E-04	2.82E-04	0.00E+00	1.51E-05	1.64E-05	0.00E+00	3.97E-07		8.59E-06	0.00E+00
Xe-131m TOTALS	1.75E-03	1.94E-02	0.00E+00	3.70E-04	4.10E-03	0.00E+00	4.13E-04		9.12E-02	0.00E+00
Xe-133m TOTALS	5.14E-03	3.41E-02	0.00E+00	1.34E-03	8.89E-03	0.00E+00	1.47E-03		1.95E-01	0.00E+00
Xe-133 TOTALS	4.46E-01	8.43E-01	0.00E+00	9.76E-02	1.85E-01	0.00E+00	1.09E-01		4.09E+00	0.00E+00
Xe-135m TOTALS	6.11E-01	1.94E-01	0.00E+00	4.20E-01	1.33E-01	0.00E+00	1.10E-01		6.97E-01	0.00E+00
Xe-135 TOTALS	2.40E-01	3.91E-01	0.00E+00	3.44E-01	5.60E-01	0.00E+00	3.63E-01		1.18E+01	0.00E+00
Xe-137 TOTALS	7.28E-05	1.10E-03	0.00E+00	4.23E-06	6.40E-05	0.00E+00	1.34E-07		4.04E-05	0.00E+00
Xe-138 TOTALS	6.00E-03	4.46E-03	0.00E+00	3.49E-04	2.60E-04	0.00E+00	3.23E-05		4.78E-04	0.00E+00
I-131 TOTALS	3.40E+00	1.79E+00	2.10E+04	2.15E+00	1.14E+00	1.33E+04	1.19E-01		1.25E+00	1.46E+04

TRAILS_PC -- Transport of Radioactive Material in Linear Systems, v1.0a
FRC - for CR, EAB & LPZ dose (80 gpm letdown) [FRC20_5.in] (1/01)

***PROGENY INGROWTH ON ***

	- EXCLUSION AREA BOUNDARY -			--- LOW POPULATION ZONE ---			---------- CONTROL ROOM ----------			
	EDE DOSE mrem	SKIN-DE DOSE mrem	THY-CDE DOSE mrem	EDE DOSE mrem	SKIN-DE DOSE mrem	THY-CDE DOSE mrem	EDE DOSE mrem	EDE RATE DOSE RATE mrem/h	SKIN-DE DOSE mrem	THY-CDE DOSE mrem
I-132 TOTALS	2.13E+01	6.29E+00	1.26E+02	7.80E+00	2.30E+00	4.61E+01	3.24E-01		1.91E+00	3.82E+01
I-133 TOTALS	9.66E+00	8.97E+00	6.21E+03	5.73E+00	5.32E+00	3.68E+03	3.06E-01		5.66E+00	3.91E+03
I-134 TOTALS	2.21E+01	7.27E+00	1.88E+01	4.99E+00	1.64E+00	4.25E+00	1.47E-01		9.59E-01	2.48E+00
I-135 TOTALS	2.04E+01	6.17E+00	8.38E+02	1.04E+01	3.16E+00	4.29E+02	5.19E-01		3.12E+00	4.24E+02
ALL NUCLIDES										
0.5000 h	6.05E+00	3.08E+00	1.87E+03	3.52E-01	1.79E-01	1.09E+02	2.83E-02	1.09E-01	2.93E-01	1.84E+02
1.5000 h	4.06E+01	1.75E+01	1.42E+04	2.36E+00	1.02E+00	8.24E+02	1.01E-01	9.50E-02	1.10E+00	7.75E+02
2.0000 h	3.17E+01	1.35E+01	1.22E+04	1.84E+00	7.84E-01	7.06E+02	5.74E-02	1.32E-01	7.64E-01	4.73E+02
4.0000 h	0.00E+00	0.00E+00	0.00E+00	1.06E+01	4.60E+00	4.68E+03	4.38E-01	2.79E-01	7.36E+00	3.64E+03
8.0000 h	0.00E+00	0.00E+00	0.00E+00	1.68E+01	8.30E+00	1.12E+04	1.35E+00	3.76E-01	2.85E+01	1.34E+04
8.5000 h	0.00E+00	0.00E+00	0.00E+00	0.00E+00	0.00E+00	0.00E+00	3.77E-02	2.70E-03	8.54E-01	3.99E+02
24.0000 h	0.00E+00	0.00E+00	0.00E+00	0.00E+00	0.00E+00	0.00E+00	1.05E-02	7.06E-05	2.84E-01	1.55E+02
96.0000 h	0.00E+00	0.00E+00	0.00E+00	0.00E+00	0.00E+00	0.00E+00	2.00E-04	7.24E-11	7.82E-03	5.89E+00
720.0000 h	0.00E+00	0.00E+00	0.00E+00	0.00E+00	0.00E+00	0.00E+00	1.61E-10	0.00E+00	1.20E-08	1.02E-05
TOTALS	7.84E+01	3.41E+01	2.82E+04	3.20E+01	1.49E+01	1.75E+04	2.02E+00		3.92E+01	1.90E+04

TRAILSPC Input File For FRP Case

```
'L1 ',9,1.0E-3,3.47E-4,1.0E-5,3.47E-4,1.0,1.0E-3,3.47E-4,1,24,0,2
'FRP - for CR, EAB & LPZ Dose (80 gpm letdown) [FRP20_5.in] (1/01) '
'C1 ','not used ',0.0,0.0,0.0,0.0
'C2 ','Affected S/G ',8.697E-6,0.0,0.0,0.0
'CR ',1.73E5,10.,10.,0.0,0.960,0.0
'PRD',24*0.0
'PRD',24*0.0,
'INI',1.0,' ',24*0.0
'INI',1.0,'uCi',1.72E6,6.01E6,6.31E8,4.03E6,1.13E7,3.27E5,0.0,
2.05E7,1.71E7,1.27E9,3.91E6,4.21E7,8.05E5,2.76E6,
7.02E8,2.77E8,1.05E9,1.55E8,6.06E8,5*0.0
'INI',1.0,' ',24*0.0
'TIM',1800.,5400.,7200.,14400.,28800.,30600.,86400.,3.456E5,2.592E6
'XPR',9*0.0
'XPR',9*0.0
'XPR',50.0,1.0,3*104.,2800.,3*50.
'XRM',9*0.0
'XRM',5*1.0,4*0.0
'XRM',50.0,1.0,3*104.,2800.,3*50.
'XRF',9*0.0
'XRF',9*0.0
'XRF',2*0.0,3*1.0,4*0.0
'XOQEB',3*1.04,6*0.0
'XBREB',3*1.0,6*0.0
'XOQLZ',5*6.04,2*4.33,2.10,0.744
'XBRLZ',9*1.0
'XOQ',5*2.43,2*1.22,0.890,0.626
'XBR',9*1.0
'OCC',7*1.0,0.6,0.4
```

TRAILS_PC -- Transport of Radioactive Material in Linear Systems, V1.0a
FRP - for CR, EAB & LPZ Dose (80 gpm letdown) [FRP20_5.in] (1/01) ***PROGENY INGROWTH ON ***

	COMP: not used	COMP: Affected S/G	COMP: Control Room VOLUME: 1.730E+05 Cu.Ft.
INITIAL:	0.000E+00 Kr-83m	1.720E+06 Kr-83m uCi	0.000E+00 Kr-83m
	0.000E+00 Kr-85m	6.010E+06 Kr-85m	0.000E+00 Kr-85m
	0.000E+00 Kr-85	6.310E+08 Kr-85	0.000E+00 Kr-85
	0.000E+00 Kr-87	4.030E+06 Kr-87	0.000E+00 Kr-87
	0.000E+00 Kr-88	1.130E+07 Kr-88	0.000E+00 Kr-88
	0.000E+00 Kr-89	3.270E+05 Kr-89	0.000E+00 Kr-89
	0.000E+00 Xe-131m	2.050E+07 Xe-131m	0.000E+00 Xe-131m
	0.000E+00 Xe-133m	1.710E+07 Xe-133m	0.000E+00 Xe-133m
	0.000E+00 Xe-133	1.270E+09 Xe-133	0.000E+00 Xe-133
	0.000E+00 Xe-135m	3.910E+06 Xe-135m	0.000E+00 Xe-135m
	0.000E+00 Xe-135	4.210E+07 Xe-135	0.000E+00 Xe-135
	0.000E+00 Xe-137	8.050E+05 Xe-137	0.000E+00 Xe-137
	0.000E+00 Xe-138	2.760E+06 Xe-138	0.000E+00 Xe-138
	0.000E+00 I-131	7.020E+08 I-131	0.000E+00 I-131
	0.000E+00 I-132	2.770E+08 I-132	0.000E+00 I-132
	0.000E+00 I-133	1.050E+09 I-133	0.000E+00 I-133
	0.000E+00 I-134	1.550E+08 I-134	0.000E+00 I-134
	0.000E+00 I-135	6.060E+08 I-135	0.000E+00 I-135
ACT MULT (to uCi):	1.000E+00	1.000E+00	1.000E+00

TRAILS_PC -- Transport of Radioactive Material in Linear Systems, v1.0a
FRP - for CR, EAB & LPZ Dose (80 gpm letdown) [FRP20_5.in] (1/01)

***PROGENY INGROWTH ON ***

REMOVAL:	0.000E+00 1/sec		8.697E-06 1/sec		1.000E+01 cfm
NUC Grp 1 REL FR:		0.000E+00		0.000E+00	INTAKE REDUCT: 0.000E+00
NUC Grp 2 REL FR:		0.000E+00		0.000E+00	INTAKE REDUCT: 9.600E-01
NUC Grp 3 REL FR:		0.000E+00		0.000E+00	INTAKE REDUCT: 0.000E+00

MULTIPLIERS====>

STEP	TIME	XPR	XREM	XRF	XPR	XREM	XRF	XPR	XREM	XRF
1	1.800E+03	0.00	0.00	0.00	0.00	1.00	0.00	50.0	50.0	0.00
2	5.400E+03	0.00	0.00	0.00	0.00	1.00	0.00	1.00	1.00	0.00
3	7.200E+03	0.00	0.00	0.00	0.00	1.00	0.00	104.	104.	1.00
4	1.440E+04	0.00	0.00	0.00	0.00	1.00	0.00	104.	104.	1.00
5	2.880E+04	0.00	0.00	0.00	0.00	1.00	0.00	104.	104.	1.00
6	3.060E+04	0.00	0.00	0.00	0.00	0.00	0.00	2.800E+03	2.800E+03	0.00
7	8.640E+04	0.00	0.00	0.00	0.00	0.00	0.00	50.0	50.0	0.00
8	3.456E+05	0.00	0.00	0.00	0.00	0.00	0.00	50.0	50.0	0.00
9	2.592E+06	0.00	0.00	0.00	0.00	0.00	0.00	50.0	50.0	0.00

MULTIPLIERS====>

STEP	TIME,s	CONTROL ROOM X/Q s/M3	CONTROL ROOM Breathing M3/s	CONTROL ROOM Occupancy	EXCLUSION AREA BOUNDARY X/Q s/M3	EXCLUSION AREA BOUNDARY Breathing M3/s	LOW POPULATION ZONE X/Q s/M3	LOW POPULATION ZONE Breathing M3/s
		1.000E-03	3.470E-04	1.000E+00	1.000E-03	3.470E-04	1.000E-05	3.470E-04
1	1.800E+03	2.43	1.00	1.00	1.04	1.00	6.04	1.00
2	5.400E+03	2.43	1.00	1.00	1.04	1.00	6.04	1.00
3	7.200E+03	2.43	1.00	1.00	1.04	1.00	6.04	1.00
4	1.440E+04	2.43	1.00	1.00	0.00	0.00	6.04	1.00
5	2.880E+04	2.43	1.00	1.00	0.00	0.00	6.04	1.00
6	3.060E+04	1.22	1.00	1.00	0.00	0.00	4.33	1.00
7	8.640E+04	1.22	1.00	1.00	0.00	0.00	4.33	1.00
8	3.456E+05	0.890	1.00	0.600	0.00	0.00	2.10	1.00
9	2.592E+06	0.626	1.00	0.400	0.00	0.00	0.744	1.00

TRAILS_PC -- Transport of Radioactive Material in Linear Systems, v1.0a
FRP - for CR, EAB & LPZ Dose (80 gpm letdown) [FRP20_5.in] (1/01)

***PROGENY INGROWTH ON ***

STEP	TIME	not used CURRENT uCi	not used INTEGRD uCi-sec	Affected S/G CURRENT uCi	Affected S/G INTEGRD uCi-sec	AVERAGE RELEASED uCi	AVERAGE RELEASE uCi/sec	CONTROL ROOM CURRENT uCi	CONTROL ROOM CURRENT uCi/cc	CONTROL ROOM INTEGRD uCi-sec
Kr-83m	INITIAL	0.000E+00		1.720E+06				0.000E+00		
Kr-83m	TOTALS		0.000E+00		1.515E+10	1.264E+05				4.336E+05
Kr-85m	INITIAL	0.000E+00		6.010E+06				0.000E+00		
Kr-85m	TOTALS		0.000E+00		1.216E+11	7.831E+05				3.974E+06
Kr-85	INITIAL	0.000E+00		6.310E+08				0.000E+00		
Kr-85	TOTALS		0.000E+00		1.272E+15	1.398E+08				9.246E+08
Kr-87	INITIAL	0.000E+00		4.030E+06				0.000E+00		
Kr-87	TOTALS		0.000E+00		2.519E+10	2.167E+05				5.639E+05
Kr-88	INITIAL	0.000E+00		1.130E+07				0.000E+00		
Kr-88	TOTALS		0.000E+00		1.498E+11	1.143E+06				4.959E+06
Kr-89	INITIAL	0.000E+00		3.270E+05				0.000E+00		
Kr-89	TOTALS		0.000E+00		8.923E+07	7.761E+02				1.202E+02
Xe-131m	INITIAL	0.000E+00		2.050E+07				0.000E+00		
Xe-131m	TOTALS		0.000E+00		2.326E+13	4.516E+06				2.975E+07
Xe-133m	INITIAL	0.000E+00		1.710E+07				0.000E+00		
Xe-133m	TOTALS		0.000E+00		6.229E+12	3.904E+06				2.543E+07
Xe-133	INITIAL	0.000E+00		1.270E+09				0.000E+00		
Xe-133	TOTALS		0.000E+00		7.277E+14	2.799E+08				1.837E+09
Xe-135m	INITIAL	0.000E+00		3.910E+06				0.000E+00		
Xe-135m	TOTALS		0.000E+00		2.895E+12	1.473E+07				2.689E+07
Xe-135	INITIAL	0.000E+00		4.210E+07				0.000E+00		
Xe-135	TOTALS		0.000E+00		1.811E+13	3.161E+07				2.048E+08
Xe-137	INITIAL	0.000E+00		8.050E+05				0.000E+00		
Xe-137	TOTALS		0.000E+00		2.661E+08	2.314E+03				4.325E+02
Xe-138	INITIAL	0.000E+00		2.760E+06				0.000E+00		
Xe-138	TOTALS		0.000E+00		3.340E+09	2.905E+04				1.580E+04
I-131	INITIAL	0.000E+00		7.020E+08				0.000E+00		
I-131	TOTALS		0.000E+00		5.085E+14	1.534E+08				1.200E+08

TRAILS_PC -- Transport of Radioactive Material in Linear Systems, v1.0a
FRP - for CR, EAB & LPZ Dose (80 gpm letdown) [FRP20_5.in] (1/01) ***PROGENY INGROWTH ON ***

STEP	TIME	not used CURRENT uCi	INTEGRD uCi-sec	Affected S/G CURRENT uCi	INTEGRD uCi-sec	AVERAGE RELEASED uCi	RELEASE uCi/sec	CONTROL ROOM CURRENT uCi	CURRENT uCi/cc	INTEGRD uCi-sec
I-132	INITIAL	0.000E+00		2.770E+08				0.000E+00		
I-132	TOTALS		0.000E+00		3.019E+12	2.425E+07				1.989E+07
I-133	INITIAL	0.000E+00		1.050E+09				0.000E+00		
I-133	TOTALS		0.000E+00		9.125E+13	2.054E+08				1.615E+08
I-134	INITIAL	0.000E+00		1.550E+08				0.000E+00		
I-134	TOTALS		0.000E+00		6.789E+11	5.896E+06				4.746E+06
I-135	INITIAL	0.000E+00		6.060E+08				0.000E+00		
I-135	TOTALS		0.000E+00		1.763E+13	9.246E+07				7.368E+07

TRAILS_PC -- Transport of Radioactive Material in Linear Systems, v1.0a
FRP - for CR, EAB & LPZ Dose (80 gpm letdown) [FRP20_5.in] (1/01)

***PROGENY INGROWTH ON ***

	- EXCLUSION AREA BOUNDARY -			--- LOW POPULATION ZONE ---			---------- CONTROL ROOM ----------			
	EDE DOSE mrem	SKIN-DE DOSE mrem	THY-CDE DOSE mrem	EDE DOSE mrem	SKIN-DE DOSE mrem	THY-CDE DOSE mrem	EDE DOSE mrem	EDE RATE DOSE RATE mrem/h	SKIN-DE DOSE mrem	THY-CDE DOSE mrem
Kr-83m TOTALS	1.14E-06	0.00E+00	0.00E+00	1.13E-07	0.00E+00	0.00E+00	6.61E-08		0.00E+00	0.00E+00
Kr-85m TOTALS	8.46E-03	1.67E-02	0.00E+00	1.22E-03	2.42E-03	0.00E+00	1.06E-03		4.15E-02	0.00E+00
Kr-85 TOTALS	1.42E-02	1.98E+00	0.00E+00	3.00E-03	4.20E-01	0.00E+00	3.37E-03		9.38E+00	0.00E+00
Kr-87 TOTALS	2.21E-02	5.24E-02	0.00E+00	1.85E-03	4.40E-03	0.00E+00	8.19E-04		3.87E-02	0.00E+00
Kr-88 TOTALS	2.03E-01	4.46E-02	0.00E+00	2.47E-02	5.45E-03	0.00E+00	1.82E-02		7.99E-02	0.00E+00
Kr-89 TOTALS	2.60E-04	2.83E-04	0.00E+00	1.51E-05	1.64E-05	0.00E+00	3.97E-07		8.59E-06	0.00E+00
Xe-131m TOTALS	1.76E-03	1.95E-02	0.00E+00	3.71E-04	4.11E-03	0.00E+00	4.14E-04		9.14E-02	0.00E+00
Xe-133m TOTALS	5.15E-03	3.42E-02	0.00E+00	1.11E-03	7.40E-03	0.00E+00	1.23E-03		1.63E-01	0.00E+00
Xe-133 TOTALS	4.47E-01	8.45E-01	0.00E+00	9.44E-02	1.78E-01	0.00E+00	1.05E-01		3.96E+00	0.00E+00
Xe-135m TOTALS	3.23E-01	1.03E-01	0.00E+00	6.05E-02	1.92E-02	0.00E+00	1.88E-02		1.19E-01	0.00E+00
Xe-135 TOTALS	1.95E-01	3.18E-01	0.00E+00	7.58E-02	1.24E-01	0.00E+00	8.34E-02		2.71E+00	0.00E+00
Xe-137 TOTALS	7.29E-05	1.10E-03	0.00E+00	4.23E-06	6.41E-05	0.00E+00	1.34E-07		4.05E-05	0.00E+00
Xe-138 TOTALS	5.99E-03	4.45E-03	0.00E+00	3.49E-04	2.59E-04	0.00E+00	3.22E-05		4.77E-04	0.00E+00
I-131 TOTALS	2.67E+00	1.41E+00	1.65E+04	5.61E-01	2.96E-01	3.47E+03	7.45E-02		7.83E-01	9.18E+03

TRAILS_PC -- Transport of Radioactive Material in Linear Systems, v1.0a
FRP - for CR, EAB & LPZ Dose (80 gpm letdown) [FRP20_5.in] (1/01)

***PROGENY INGROWTH ON ***

	- EXCLUSION AREA BOUNDARY -			--- LOW POPULATION ZONE ---			---------- CONTROL ROOM ----------			
	EDE DOSE mrem	SKIN-DE DOSE mrem	THY-CDE DOSE mrem	EDE DOSE mrem	SKIN-DE DOSE mrem	THY-CDE DOSE mrem	EDE DOSE mrem	EDE RATE DOSE RATE mrem/h	SKIN-DE DOSE mrem	THY-CDE DOSE mrem
I-132										
TOTALS	4.98E+00	1.47E+00	2.94E+01	5.53E-01	1.64E-01	3.27E+00	7.71E-02		4.53E-01	9.07E+00
I-133										
TOTALS	6.24E+00	5.79E+00	4.01E+03	1.21E+00	1.12E+00	7.75E+02	1.61E-01		2.98E+00	2.06E+03
I-134										
TOTALS	2.16E+00	7.10E-01	1.84E+00	1.55E-01	5.10E-02	1.32E-01	2.12E-02		1.39E-01	3.60E-01
I-135										
TOTALS	9.14E+00	2.76E+00	3.75E+02	1.48E+00	4.47E-01	6.07E+01	2.00E-01		1.20E+00	1.63E+02
ALL NUCLIDES										
0.5000 h	7.60E+00	4.25E+00	5.41E+03	4.41E-01	2.47E-01	3.14E+02	3.65E-02	1.42E-01	4.12E-01	5.31E+02
1.5000 h	1.31E+01	7.75E+00	1.05E+04	7.60E-01	4.50E-01	6.09E+02	1.33E-01	1.26E-01	1.57E+00	2.12E+03
2.0000 h	5.72E+00	3.57E+00	5.07E+03	3.32E-01	2.07E-01	2.95E+02	6.06E-02	1.17E-01	8.79E-01	1.02E+03
4.0000 h	0.00E+00	0.00E+00	0.00E+00	1.11E+00	7.42E-01	1.12E+03	2.05E-01	9.32E-02	5.14E+00	3.25E+03
8.0000 h	0.00E+00	0.00E+00	0.00E+00	1.57E+00	1.20E+00	1.98E+03	3.21E-01	7.39E-02	1.36E+01	4.36E+03
8.5000 h	0.00E+00	0.00E+00	0.00E+00	0.00E+00	0.00E+00	0.00E+00	7.48E-03	5.53E-04	3.70E-01	9.31E+01
24.0000 h	0.00E+00	0.00E+00	0.00E+00	0.00E+00	0.00E+00	0.00E+00	2.45E-03	2.14E-05	1.41E-01	3.65E+01
96.0000 h	0.00E+00	0.00E+00	0.00E+00	0.00E+00	0.00E+00	0.00E+00	6.61E-05	3.74E-11	5.27E-03	1.41E+00
720.0000 h	0.00E+00	0.00E+00	0.00E+00	0.00E+00	0.00E+00	0.00E+00	8.35E-11	0.00E+00	1.10E-08	2.51E-06
TOTALS	2.64E+01	1.56E+01	2.10E+04	4.22E+00	2.84E+00	4.31E+03	7.66E-01		2.21E+01	1.14E+04