FENOC
FirstEnergy Nuclear Operating Company

Beaver Valley Power Station
P.O. Box 4
Shippingport, PA 15077-0004

Lew W. Myers
Senior Vice President

724-682-5234
Fax: 724-643-8069

March 28, 2001
L-01-031

U. S. Nuclear Regulatory Commission
Attention: Document Control Desk
Washington, DC 20555-0001

Subject: Beaver Valley Power Station, Unit No. 1
Docket No. 50-334, License No. DPR-66
Unit 1 Capsule Y Revised Reactor Vessel Integrity Database Information

This letter provides revised information for the NRC Reactor Vessel Integrity Database (RVID) that reflects the Beaver Valley Power Station (BVPS) Unit 1 surveillance Capsule Y analysis. The revised information is provided as Attachment A, which contains markups of RVID screens and reports, reflecting the results of the Capsule Y analysis. Incorporation of this information will provide the most current data available for the Unit 1 BVPS surveillance program.

The Unit 1 Capsule Y was removed for evaluation in the spring of 2000 and the analysis has recently been completed. The results of this analysis are documented in WCAP-15571, "Analysis of Capsule Y from Beaver Valley Unit 1 Reactor Vessel Radiation Surveillance Program," Revision 0. As required by 10 CFR 50, Appendix H, the Capsule Y analysis results were submitted by letter L-01-027 dated March 7, 2001.

If there are any questions concerning this matter, please contact Mr. Thomas S. Cosgrove, Manager, Regulatory Affairs at 724-682-5203.

Sincerely,

Lew W. Myers

Lew W. Myers

c: Mr. L. J. Burkhart, Project Manager
Mr. D. M. Kern, Sr. Resident Inspector
Mr. H. J. Miller, NRC Region I Administrator

A008

Letter L-01-031

Attachment A

Beaver Valley Power Station Unit 1

Capsule Y RVID Markups

Reactor Vessel Integrity Database - [Plant Detail]

File Edit Help

BEAVER VALLEY 1

Print | Close

Log Date/Time: 2/9/99 12:59:53 AM

Docket No: 50-334
License No: DPR-66
Manufacturer: COMBUSTION ENGINEERING
NSSS Designer: WESTINGHOUSE
Ownergroup: WOG
Reactor Type: PWR
EOL Years: 32
EOL Date: 1/29/16
Vessel Thickness: 7.88
Vessel Radius: 78.5

28

Additional Data

Additional Notes | Closure Flange

RTndt(u) values, chemistries, and neutron fluence values for the limiting material in the BV1 RPV (plate number B6903-1) and the beltline welds are from the July 9, 1998 letter from DLC, subject: "Response to Request for Additional Information, Generic Letter 92-01, Revision 1, Supplement 1, Reactor Vessel Structural Integrity."

RTndt(u) values, chemistries, and neutron fluence values for the remaining beltline plate materials are from the August 2, 1998 PTS assessment for BV1 from J.D.

NRC will update this when new data is received.

FORGINGS, PLATES, WELDS | SURVEILLANCE DATA

FORGINGS, PLATES, WELDS FOR THIS PLANT

		HEAT ID	BASE METAL FLUX TYPE	BELTLINE ID
PLATE	DETAIL	C4381-1	A 533B	INTERMEDIATE SHELL B6607-1
PLATE	DETAIL	C4381-2	A 533B	INTERMEDIATE SHELL B6607-2
PLATE	DETAIL	C6293-2	A 533B	LOWER SHELL B7203-2
PLATE	DETAIL	C6317-1	A 533B	LOWER SHELL B6903-1

Record: 1 of 7

Form View

Reactor Vessel Integrity Database - [Plate Detail]

File Edit Help

Plate Detail

Print Close

Plant: BEAVER VALLEY 1 Reactor Type: PWR Vessel Thickness: 7.88

Docket No: 50-334 Log Date/Time: 12/22/98 10:42:30 AM Plate ID (generated by system): 70

INPUT DATA

Heat ID: C4381-1 Yrs Calc: 32

Beltline ID: INTERMEDIATE SHELL B6607-1

Base Metal: A 533B

Chemistry

Cu: 0.140 Ni: 0.620

P: 0.015 S: 0.016

	Value	Method
RTndt(u):	43.0	MTEB 5-2
Fluence(ID) EOL:	0.132	
Chem Factor:		ENTER OVERRIDE VALUES, OTHERWISE LEAVE BLANK
σ(u):		
σ(Δ):		
Margin:		
Limiting Material:		
Unirr USE:	0.0	DIRECT

CALCULATED DATA

	Value	Method
RTndt(u):	43.0	MTEB 5-2 RTndt(u)
Fluence Factor @ EOL:	1.301	fluence(ID)^(.28-.1 log(fluence(ID)))
Chemistry Factor:	100.5	TABLE
Δ RTndt @ EOL:	130	FFxCF
σ(u)	0.0	MTEB 5-2 RTndt(u)
σ(Δ)	17.0	NO SURVEILLANCE DATA
Margin:	34.0	POSITION 1.1 (NO S DATA)
RTpts @ EOL:	207.8	RTndt(u) + DRTndt + Margin
USE @ EOL (1/4T):	66.0	1.952 Fluence (1/4T) @ EOL
%Drop @ EOL (1/4T):	28	POSITION 1.2 (NO S DATA)

28

1.329

3.54

133.6

2.21

94.0

211.0

68.0

28.0

Record: 1 of 7

Form View

FLTR

Reactor Vessel Integrity Database - [Plate Detail]

File Edit Help

Plate Detail

Print Close

Plant: BEAVER VALLEY 1
Docket No: 50-334 Log Date/Time : 12/22/98 10:44:18 AM
Reactor Type: PWR Vessel Thickness: 7.88
Plate ID (generated by system): 416

INPUT DATA

Heat ID: 34331-2 Yrs Calc: 3
Beltline ID: INTERMEDIATE SHELL B6607-2
Base Metal: A 533B

Chemistry

Cu: 0.140 Ni: 0.620
P: 0.015 S: 0.016

	Value	Method
RTndt(u):	73.0	MTEB 5-2
Fluence(ID) EOL:	0.132	
Chem Factor:		
σ(u):		
σ(Δ):		
Margin:		
Limiting Material:		
Unirr USE:	83.0	DIRECT

ENTER OVERRI VALUES, OTHERWISE LEAVE BLANK

CALCULATED DATA

	Value	Method
RTndt(u):	73.0	MTEB 5-2 RTndt(u)
Fluence Factor @ EOL:	1.301	fluence(ID)^(.28-.1 log(fluence(ID)))
Chemistry Factor:	100.5	TABLE
Δ RTndt @ EOL:	130	FFxCF
σ(u)	0.0	MTEB 5-2 RTndt(u)
σ(Δ)	17.0	NO SURVEILLANCE DATA
Margin:	34.0	POSITION 1.1 (NO S DATA)
RTpts @ EOL:	237.8	RTndt(u) + DRTndt + Margin
USE @ EOL (1/4T):	60.9	1.952 Fluence (1/4T) @ EOL
%Drop @ EOL (1/4T):	26.7	POSITION 1.2 (NO S DATA)

3.54
28
1.329
133.6
241.0
60.0
28.0
2.21

Record: 2 of 7

Form View FLTR

Reactor Vessel Integrity Database - [Plate Detail]

File Edit Help

Plate Detail

Print Close

Plant: BEAVER VALLEY 1 Reactor Type: PWR Vessel Thickness: 7.88

Docket No: 50-334 Log Date/Time: 12/22/98 11:17:28 AM Plate ID (generated by system): 418

INPUT DATA

Heat ID: C6293-2 Yrs Calc: 32

Beltline ID: LOWER SHELL B7203-2

Base Metal: A 533B

Chemistry

Cu: 0.140 Ni: 0.570

P: 0.015 S: 0.015

	Value	Method
RTndt(u):	20.0	MTEB 5-2
Fluence(ID) EOL:	3.024	
Chem Factor:		ENTER OVERRIDE VALUES, OTHERWISE LEAVE BLANK
σ(u):		
σ(Δ):		
Margin:		
Limiting Material:		
Unirr USE:	8[illegible].0	DIRECT

CALCULATED DATA

Show Notes

	Value	Method	
RTndt(u):	20.0	MTEB 5-2	RTndt(u)
Fluence Factor @ EOL:	1.293	fluence(ID)^(.28-.1 log(fluence(ID)))	
Chemistry Factor:	98.7	TABLE	
ΔRTndt @ EOL:	127.5	FFxCF	
σ(u)	0.0	MTEB 5-2	RTndt(u)
σ(Δ)	17.0	NO SURVEILLANCE DATA	
Margin:	34.0	POSITION 1.1 (NO S DATA)	
RTpts @ EOL:	181.6	RTndt(u) + DRTndt + Margin	
USE @ EOL (1/4T):	61.8	1.885	Fluence (1/4T) @ EOL
%Drop @ EOL (1/4T):	26.[illegible]	POSITION 1.2 (NO S DATA)	

28

1.329

3.54

131.2

185.0

85.0

61.0

28.0

2.21

Record: 3 of 7

Form View

FLTR

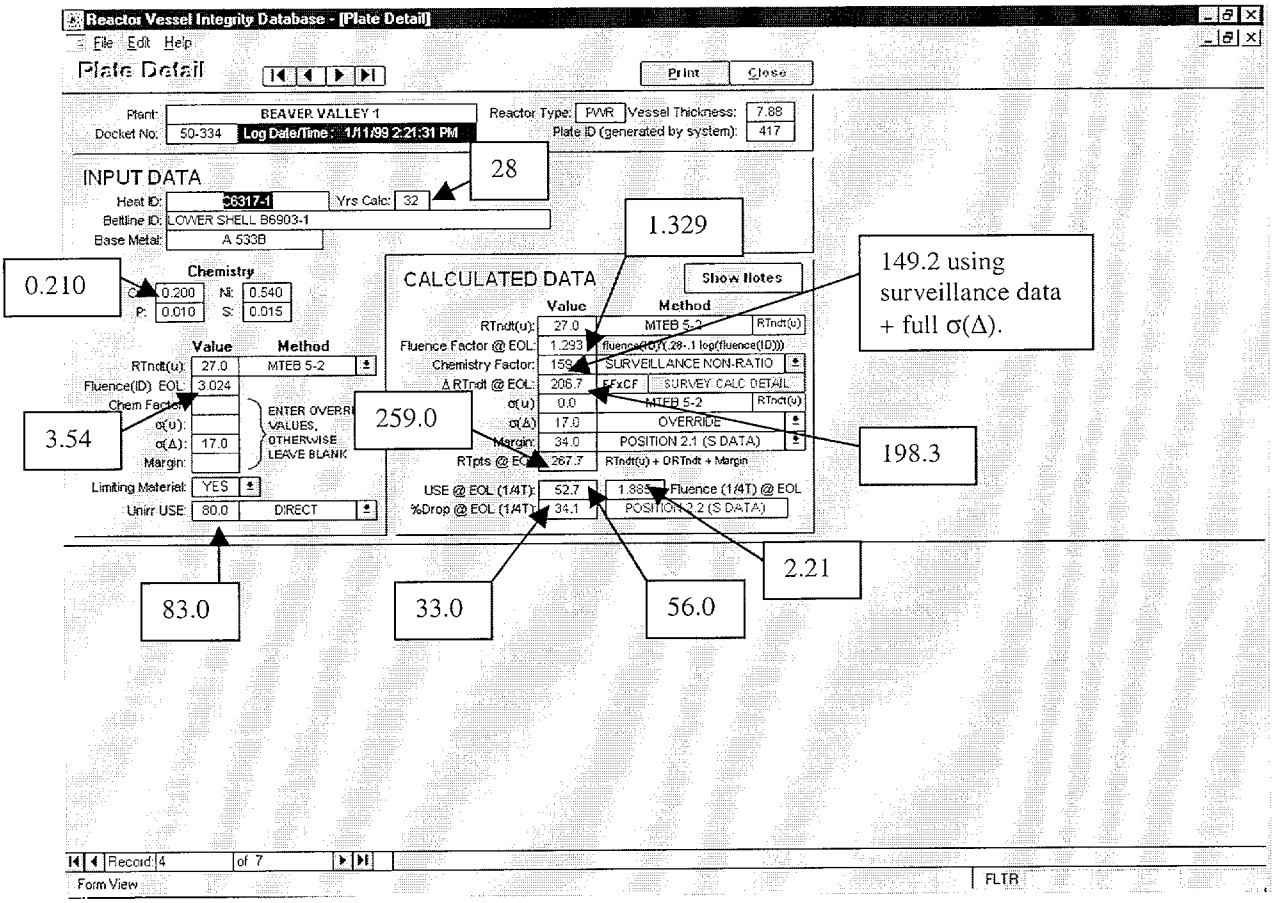
Reactor Vessel Integrity Database - [Plate Detail]
File Edit Help
Plate Detail
Print
Close
Plant: BEAVER VALLEY 1
Reactor Type: PWR
Vessel Thickness: 7.88
Docket No: 50-334
Log Date/Time: 1/11/99 2:21:31 PM
Plate ID (generated by system): 417
INPUT DATA
Heat ID: 36317-1
Yrs Calc: 32
Beltline ID: LOWER SHELL B6903-1
Base Metal: A 533B
Chemistry
Cu: 0.200
Ni: 0.540
P: 0.010
S: 0.015
Value
Method
RTndt(u): 27.0
MTEB 5-2
Fluence(ID) EOL: 3.024
Chem Factor:
σ(u):
σ(Δ): 17.0
Margin:
ENTER OVERRIDE VALUES, OTHERWISE LEAVE BLANK
Limiting Material: YES
Unirr USE: 80.0
DIRECT
CALCULATED DATA
Show Notes
Value
Method
RTndt(u): 27.0
MTEB 5-2
RTndt(u)
Fluence Factor @ EOL: 1.293
fluence@EOL(.28-.1 log(fluence(ID)))
Chemistry Factor: 159
SURVEILLANCE NON-RATIO
Δ RTndt @ EOL: 206.7
FFxCF
SURVEY CALC DETAIL
σ(u) 0.0
MTEB 5-2
RTndt(u)
σ(Δ) 17.0
OVERRIDE
Margin: 34.0
POSITION 2.1 (S DATA)
RTpts @ EOL: 267.7
RTndt(u) + DRTndt + Margin
USE @ EOL (1/4T): 52.7
1.385
Fluence (1/4T) @ EOL
%Drop @ EOL (1/4T): 34.1
POSITION 2.2 (S DATA)
Record: 4
of 7
Form View
FLTR
28
1.329
0.210
149.2 using surveillance data + full σ(Δ).
3.54
259.0
198.3
2.21
83.0
33.0
56.0

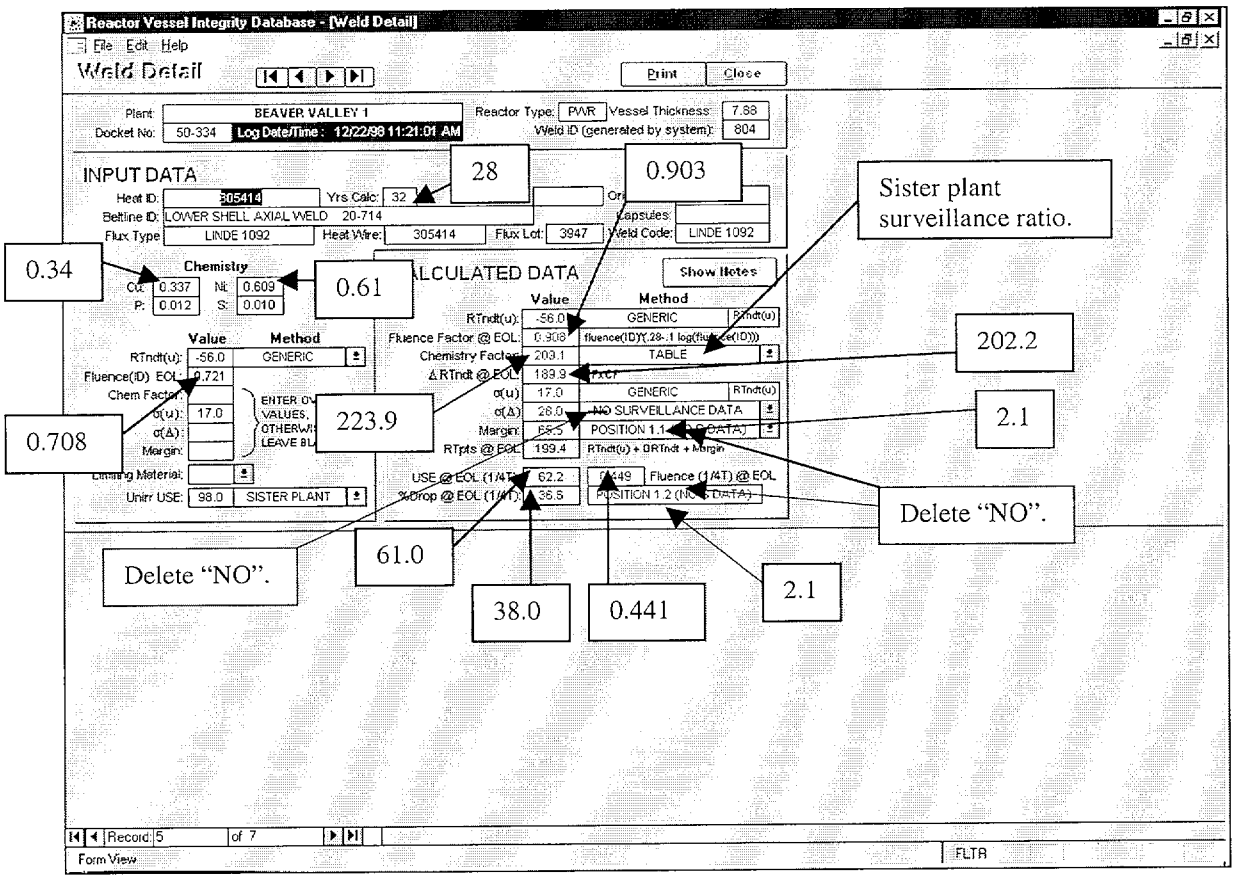
Reactor Vessel Integrity Database - [Weld Detail]
File Edit Help
Weld Detail
Print
Close
Plant: BEAVER VALLEY 1
Docket No: 50-334
Log Date/Time: 12/22/98 11:21:01 AM
Reactor Type: PWR
Vessel Thickness: 7.88
Weld ID (generated by system): 804
INPUT DATA
Heat ID: 305414
Yrs Calc: 32
Beltline ID: LOWER SHELL AXIAL WELD 20-714
Flux Type: LINDE 1092
Heat Wire: 305414
Flux Lot: 3947
Weld Code: LINDE 1092
Chemistry
Cu: 0.337
Ni: 0.609
P: 0.012
S: 0.010
Value
Method
RTndt(u): -56.0
GENERIC
Fluence(ID) EOL: 0.721
Chem Factor:
σ(u): 17.0
σ(Δ):
Margin:
Limiting Material:
Unirr USE: 98.0
SISTER PLANT
CALCULATED DATA
Show Notes
Fluence Factor @ EOL: 0.908
Chemistry Factor: 209.1
TABLE
ΔRTndt @ EOL: 189.9
σ(u): 17.0
σ(Δ): 28.0
NO SURVEILLANCE DATA
Margin: 68.5
POSITION 1.1
RTpts @ EOL: 199.4
RTndt(u) + ΔRTndt + Margin
USE @ EOL (1/4T): 62.2
%Drop @ EOL (1/4T): 36.5
Fluence (1/4T) @ EOL
POSITION 1.2
Record: 5
of 7
Form View
FLTR
28
0.903
Sister plant surveillance ratio.
0.34
0.61
202.2
0.708
223.9
2.1
Delete "NO".
Delete "NO".
61.0
38.0
0.441
2.1

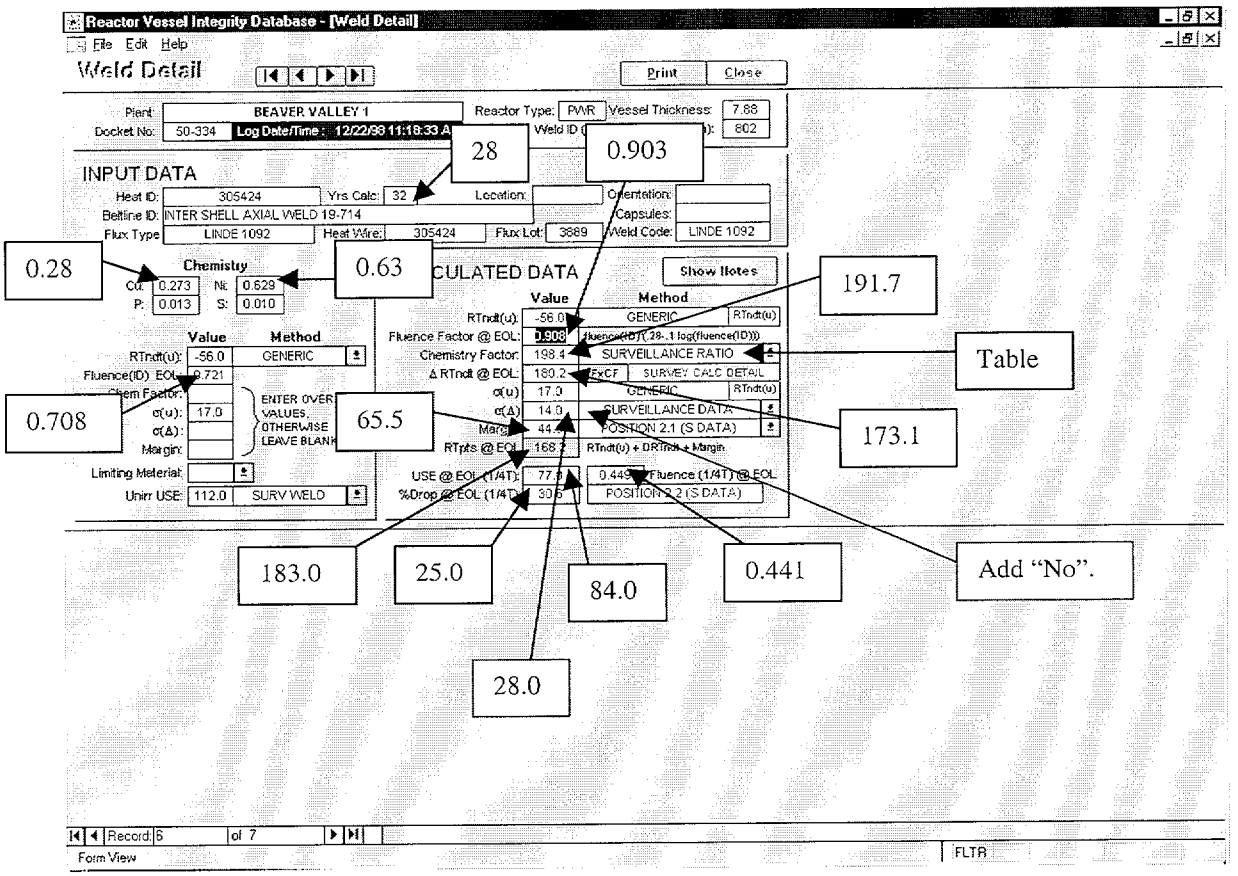

In "Show Notes" Add: "Table information used since surveillance data was non-credible and not as conservative as table values, so table values were applied."

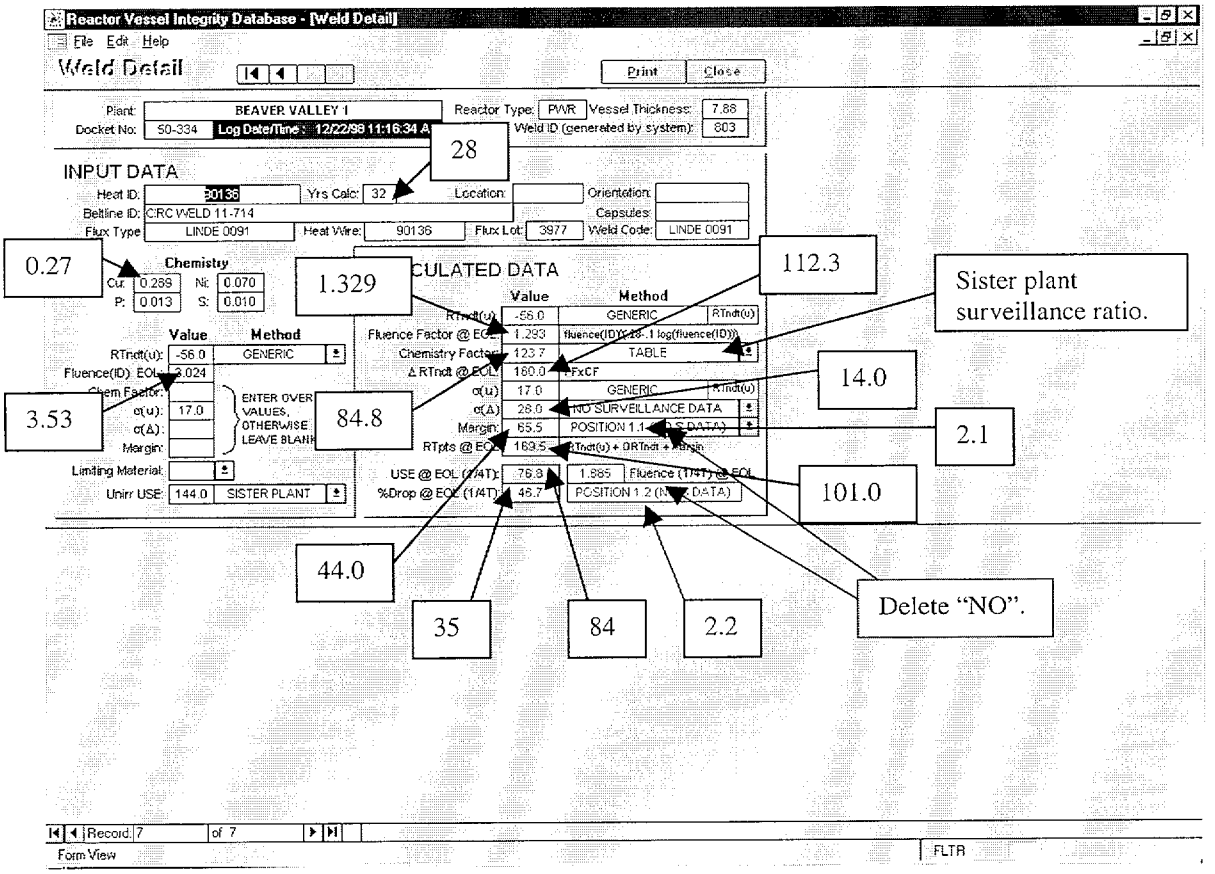
Reactor Vessel Integrity Database - [Weld Detail]
File Edit Help
Weld Detail
Print
Close
Plant: BEAVER VALLEY 1
Reactor Type: PWR
Vessel Thickness: 7.88
Docket No: 50-334
Log Date/Time: 12/22/98 11:16:34 A
Weld ID (generated by system): 803
28
INPUT DATA
Heat ID: 90136
Yrs Calc: 32
Location:
Orientation:
Beltline ID: CIRC WELD 11-714
Capsules:
Flux Type: LINDE 0091
Heat Wire: 90136
Flux Lot: 3977
Weld Code: LINDE 0091
0.27
Chemistry
Cu: 0.289
Ni: 0.070
P: 0.013
S: 0.010
1.329
112.3
Sister plant surveillance ratio.
Value
Method
RTndt(u): -56.0
GENERIC
Fluence(ID): EOL: 3.024
Chem Factor:
σ(u): 17.0
σ(Δ):
Margin:
ENTER OVER VALUES, OTHERWISE LEAVE BLANK
3.53
84.8
14.0
2.1
101.0
Limiting Material:
Unirr USE: 144.0
SISTER PLANT
Fluence Factor @ EOL: 1.293
Chemistry Factor: 123.7
TABLE
Δ RTndt @ EOL: 160.0
FxCF
σ(u): 17.0
σ(Δ): 28.0
NO SURVEILLANCE DATA
Margin: 65.5
POSITION 1.1
RTpts @ EOL: 169.5
USE @ EOL (1/4T): 76.9
1.885
%Drop @ EOL (1/4T): 46.7
POSITION 1.2
44.0
35
84
2.2
Delete "NO".
Record: 7
of 7
Form View
FLTR

Reactor Vessel Integrity Database - [PTS/PT-Limits Summary Report]

File Edit Help

Main Screen

Insert 1 Insert 2 Insert 3 Insert 4 Insert 5 Insert 6 Insert 7 Insert 8 Insert 9 Insert 10

NRC - Reactor Vessel Integrity Database

PTS Summary Report

BEAVER VALLEY 1

Printed 3/7/2001 11:20:46 A

Page 1

Docket No: 50-[illegible]

EOL Date: 01/29/2016

Beltline Identification Type	Heat ID	RTpts @ EOL	Neutron Fluence @ EOL	RTndt(u)	RTndt(u) METHOD	RTndt(u) @ EOL	Fluence Factor @ EOL	Chem Factor	Chemistry Factor Method	Margin	Margin Method	Cu %	Ni %	P %	S %
INTERMEDIATE SHELL	B6607-1	207.8	3.132	43.0	MTEB 5-2	130.8	1.301	100.50	TABLE	34.0	POSITION 1.1 (NO S DATA)	0.140	0.620	0.015	0.016
PLATE	04381-1														
INTERMEDIATE SHELL	B6607-2	237.8	3.132	73.0	MTEB 5-2	130.8	1.301	100.50	TABLE	34.0	POSITION 1.1 (NO S DATA)	0.140	0.620	0.015	0.016
PLATE	04381-2														
LOWER SHELL	B7203-2	181.6	3.024	20.0	MTEB 5-2	127.6	1.293	83.65	TABLE	34.0	POSITION 1.1 (NO S DATA)	0.140	0.570	0.015	0.015
PLATE	06293-2														
LOWER SHELL	B6903-1	267.7	3.024	27.0	MTEB 5-2	206.7	1.293	59.86	SURVEILLANCE (CON-RATIO	34.0	POSITION 2.1 (SD DATA)	0.208	0.540	0.010	0.015
PLATE	06317-1														
LOWER SHELL AXIAL WELD	20-714	199.4	0.721	-56.0	GENERIC	189.9	0.908	209.11	TABLE	65.5	POSITION 1.1 (NO S DATA)	0.337	0.609	0.012	0.010
WELD	305414														
INTER SHELL AXIAL WELD	19-714	168.2	0.721	-56.0	GENERIC	180.2	0.908	98.42	SURVEILLANCE RATIO	44.0	POSITION 2.1 (SD DATA)	0.273	0.629	0.013	0.010
WELD	305424														
CIRC WELD	11-714	169.5	3.024	-56.0	GENERIC	160.0	1.293	23.72	TABLE	65.5	POSITION 1.1 (NO S DATA)	0.269	0.070	0.013	0.010
WELD	90136														

Plant Reference and Beltline Material Notes:

RTndt(u) values, chemistries, and neutron fluence values for the limiting material in the BV1 RPV (plate number B6903-1) and the beltline welds are from the July 9, 1998 letter from DLC, subject "Response to Request for Additional Information, Generic Letter 92-01, Revision 1, Supplement 1, Reactor Vessel Structural Integrity."

RTndt(u) values, chemistries, and neutron fluence values for the remaining beltline plate materials are from the August 2, 1996 PTS assessment for BV1 from J.D. Sieber (DLC) to the USNRC Document Control Desk.

The USNRC Safety Evaluation Report (SER) of the August 2, 1996 revised PTS assessment was submitted in the letter dated October 7, 1997 from D. Brinkman (USNRC) to J. Cross (DLC). This SER concluded that, based on information provided by the licensee, BV1 would remain below the PTS screening criteria through expiration of license (EOL).

Updated USE values for BV1 beltline materials are from the September 10, 1998 letter from DLC.

For the PTS assessment of Plate No. B7203-2, the RVID corrects typographical errors in the NRC SER dated October 7, 1997. The correct margin term value for Plate No. B7203-2 is 34.0 F (corrected from 65.5 F as listed in the SER), and the correct EOL RTPTS value for Plate No. B7203-2 is 181.6 F (corrected from 213.1 F as listed in the SER).

The revised RTpts value for Plate No. B6903-1 reflects the NRC determined value referenced in the NRC SER dated October 7, 1997.

The revised PTS summary sheet values for Axial Weld No. 20-714 (Heat No. 305414), Axial Weld No. 19-714 (Heat No. 305424), and Circumferential Weld No. 11-714 (Heat No. 90136) reflect changes to the chemical compositions as reported in CE Owners Group (CEOG) Topical Report CE NPSD-1039 (June 1997).

For the BV1 Axial Weld No. 19-714 (fabricated from Heat No. 305424), the RVID reflects values listed in the DLC submittal dated July 9, 1998, but corrects the listed chemistry factor for the material according to the ratio procedure method described in Regulatory Guide 1.99, Revision 2. The chemistry factor for Axial Weld 19-714 is therefore listed in the RVID PTS Summary Report as 130.1 F (corrected from 132.4 F), and the EOL RTPTS value for the weld is therefore listed in the RVID as 168.2 F.

Notes need to be revised by the NRC.

Page: 1

Ready

Insert 1	Insert 2	Insert 3	Insert 4	Insert 5
211	3.54	133.6	1.329	98.7
241	3.54	133.6	1.329	149.2
185	3.54	131.2	1.329	223.9
259	3.54	198.3	1.329	191.7
212	0.708	202.2	0.903	84.8
175	0.708	173.1	0.903	
101	3.53	112.3	1.329	

Insert 6	Insert 7	Insert 8	Insert 9	Insert 10
SURVEILLANCE RATIO	65.5	POSITION 2.1 (S DATA)	0.21	0.61
SURVEILLANCE RATIO	44.0	POSITION 2.1 (S DATA)	0.34	0.63
TABLE		POSITION 2.1 (S DATA)	0.28	
SURVEILLANCE RATIO			0.27	

Reactor Vessel Integrity Database - [USE Summary Report]

File Edit Help

Main Screen

Insert 11

Insert 12

Insert 13

Insert 14

Insert 15

Insert 16

Insert 17

Delete "No".

2.2

Surveillance Plate

Notes need to be revised by the NRC.

NRC - Reactor Vessel Integrity Database

Upper Shelf Energy Summary Report

BEAVER VALLEY 1

Printed 3/7/2001
Page 1

Docket No: 50-334
EOL Date: 01/23/2016

Beltline Identification Type	Heat ID	Material Type	USE @ EOL (ft-lbs)	1/4T Neutron Fluence @ EOL	Unirradiated USE	Unirradiated USE Method	% Drop in USE @ EOL (ft-lbs)	% Drop in USE Method	Cu %
INTERMEDIATE SHELL B6607-1		A 533B	65.99	1.952	90.00	DIRECT	26.68	POSITION 1.2 (NO S DATA)	0.140
PLATE	C4381-1								
INTERMEDIATE SHELL B6607-2		A 533B	60.86	1.952	83.00	DIRECT	26.68	POSITION 1.2 (NO S DATA)	0.140
PLATE	C4381-2								
LOWER SHELL B7203-2		A 533B	61.77	1.885	84.00	DIRECT	26.46	POSITION 1.2 (NO S DATA)	0.140
PLATE	C6293-2								
LOWER SHELL B6903-1		A 533B	52.73	1.885	80.00	DIRECT	34.09	POSITION 2.2 (S DATA)	[illegible]
PLATE	C6317-1								
LOWER SHELL AXIAL WELD 20-714		LINDE 1092	[illegible]	0.449	[illegible]	SISTER PLANT	36.57	POSITION 1.2 (NO S DATA)	0.331
WELD	305414								
INTER SHELL AXIAL WELD 19-714		LINDE 1092	77.77	0.449	112.00	SURV WELD	30.56	POSITION 2.2 (S DATA)	0.273
WELD	305424								
CIRC WELD 11-714		LINDE 0091	76.75	1.885	144.00	SISTER PLANT	46.70	POSITION 1.2 (NO S DATA)	0.269
WELD	90136								

Plant References and Beltline Material Notes

RTndt(u) values, chemistries, and neutron fluence values for the limiting material in the BV1 RPV (plate number B6903-1) and the beltline welds are from the July 9, 1998 letter from DLC, subject "Response to Request for Additional Information, Generic Letter 92-01, Revision 1, Supplement 1.

RTndt(u) values, chemistries, and neutron fluence values for the remaining beltline pl[illegible]ment for BV1 from J.D. Sieber (DLC) to the USNRC Document Control Desk.

The USNRC Safety Evaluation Report (SER) of the August 2, 1995 revised PTS assessment was submitted in the letter dated October 7, 1997 from D. Brinkman (USNRC) to J. Cross (DLC). This SER concluded that, based on information provided by the licensee, BV1 would remain below the PTS screening criteria through expiration of licence (EOL).

Updated UUSE values for BV1 beltline materials are from the September 10, 1998 letter from DLC.

For the PTS assessment of Plate No. B7203-2, the RVID corrects typographical errors in the NRC SER dated October 7, 1997. The correct margin term value for Plate No. B7203-2 is 34.0 F (corrected from 65.5 F as listed in the SER), and the correct EOL RTPTS value for Plate No. B7203-2 is 181.5 F (corrected from 213.1 F as listed in the SER).

The revised RTpts value for Plate No. B6903-1 reflects the NRC determined value referenced in the NRC SER dated October 7, 1997.

The revised PTS summary sheet values for Axial Weld No. 20-714 (Heat No. 305414), Axial Weld No. 19-714 (Heat No. 305424), and Circumferential Weld No. 11-714 (Heat No. 90136) reflect changes to the chemical compositions as reported in CE Owners Group (CEOG) Topical Report CE NPSD-1039 (June 1997).

For the BV1 Axial Weld No. 19-714 (fabricated from Heat No. 305424), the RVID reflects values listed in the DLC submittal dated July 9, 1998, but corrects the listed chemistry factor for the material according to the ratio procedure method described in Regulatory Guide 1.99, Revision 2. The chemistry factor for Axial Weld 19-714 is therefore listed in the RVID PTS Summary Report as 138.4 F (corrected from 132.4 F), and the EOL RTPTS value for the weld is therefore listed in the RVID as 168.2 F.

Page: 1

Ready

Insert 11
84
84

Insert 12
68
60
61
56

Insert 13
2.21
2.21
2.21
2.21
0.441
0.441
2.20

Insert 14
94

Insert 15
85
83

Insert 16
28
28
28
33
38
25
35

Insert 17
0.21
0.34
0.27
0.27

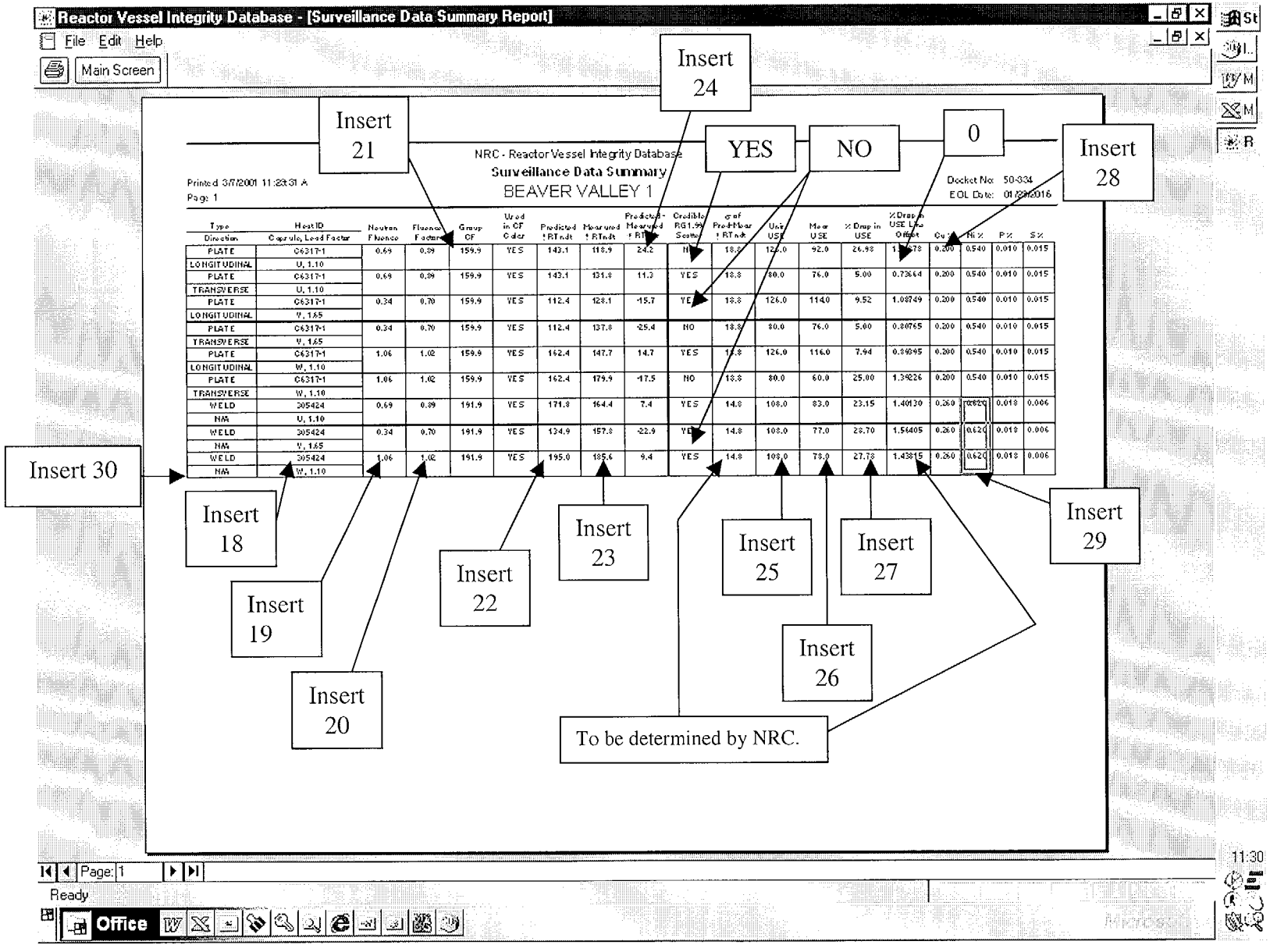

Type / Direction	Heat ID / Capsule, Lead Factor	Neutron Fluence	Fluence Factor	Group CF	Used in CF Calcr	Predicted ↑RTndt	Measured ↑RTndt	Predicted - Measured ↑RTndt	Credible RG1.99 Scatter	σ of Pred-Mear ↑RTndt	Unit USE	Mear USE	% Drop in USE	% Drop in USE Line Offset	Cu %	Ni %	P %	S %
PLATE LONGITUDINAL	C6317-1 U, 1.10	0.69	0.89	159.9	YES	143.1	118.9	24.2	NO	18.8	126.0	92.0	26.98	1.[illegible]78	0.200	0.540	0.010	0.015
PLATE TRANSVERSE	C6317-1 U, 1.10	0.69	0.89	159.9	YES	143.1	131.8	11.3	YES	18.8	80.0	76.0	5.00	0.73664	0.200	0.540	0.010	0.015
PLATE LONGITUDINAL	C6317-1 V, 1.65	0.34	0.70	159.9	YES	112.4	128.1	-15.7	YES	18.8	126.0	114.0	9.52	1.08749	0.200	0.540	0.010	0.015
PLATE TRANSVERSE	C6317-1 V, 1.65	0.34	0.70	159.9	YES	112.4	137.8	-25.4	NO	18.8	80.0	76.0	5.00	0.80765	0.200	0.540	0.010	0.015
PLATE LONGITUDINAL	C6317-1 W, 1.10	1.06	1.02	159.9	YES	162.4	147.7	14.7	YES	18.8	126.0	116.0	7.94	0.89395	0.200	0.540	0.010	0.015
PLATE TRANSVERSE	C6317-1 W, 1.10	1.06	1.02	159.9	YES	162.4	179.9	-17.5	NO	18.8	80.0	60.0	25.00	1.39226	0.200	0.540	0.010	0.015
WELD N/A	305424 U, 1.10	0.69	0.89	191.9	YES	171.8	164.4	7.4	YES	14.8	108.0	83.0	23.15	1.40130	0.260	0.620	0.018	0.006
WELD N/A	305424 V, 1.65	0.34	0.70	191.9	YES	134.9	157.8	-22.9	YES	14.8	108.0	77.0	28.70	1.56405	0.260	0.620	0.018	0.006
WELD N/A	305424 W, 1.10	1.06	1.02	191.9	YES	195.0	185.6	9.4	YES	14.8	108.0	78.0	27.78	1.43815	0.260	0.620	0.018	0.006

Insert 18	Insert 19	Insert 20	Insert 21	Insert 22	Insert 23
C6317-1	0.646	0.878	147.2	129.2	118.93
U, 1.05	0.646	0.878	147.2	129.2	131.84
C6317-1	0.323	0.689	147.2	101.4	128.49
U, 1.05	0.323	0.689	147.2	101.4	137.81
C6317-1	0.986	0.996	147.2	146.6	148.52
V, 1.60	0.986	0.996	147.2	146.6	179.99
C6317-1	0.646	0.878	181.6	159.4	166.32
V, 1.60	0.323	0.689	181.6	125.1	159.72
C6317-1	0.986	0.996	181.6	180.9	187.73
W, 1.09					
C6317-1					
W, 1.09					
305424					
U, 1.05					
305424					
V, 1.60					
305424					
W, 1.09					

Insert 24	Insert 25	Insert 26	Insert 27	Insert 28	Insert 29
10.3	135	105	30	0.21	0.61
-2.64	81	78	3	0.21	0.61
-27.09	135	114	21	0.21	0.61
-36.41	81	75	6	0.21	
-1.92	135	114	21	0.21	
-33.39	81	59	22	0.21	
-6.92	112	83	29	0.26	
-34.62	112	88	24	0.26	
-6.83	112	78	34	0.26	

Insert 30
New information to be added to table.

PLATE	C6317-1	2.15	1.21	147.2	YES	178.1	142.18	35.92	NO		135	110	25		0.21	0.54	0.01	0.015
LONGITUDINAL	Y, 1.22																	
PLATE	C6317-1	2.15	1.21	147.2	YES	178.1	166.93	11.17	YES		81	71	10		0.21	0.54	0.01	0.015
TRANVERSE	Y, 1.22																	
WELD	305424	2.15	1.21	181.6	YES	219.7	179.69	40.01	NO		112	77	35		0.26	0.61	0.08	0.006
N/A	Y, 1.22																	

To be determined by NRC.