Appendix 3.S – Detailed Finite Element Listings For The MPC-68 Enclosure Vessel

Ten (10) pages total including cover page

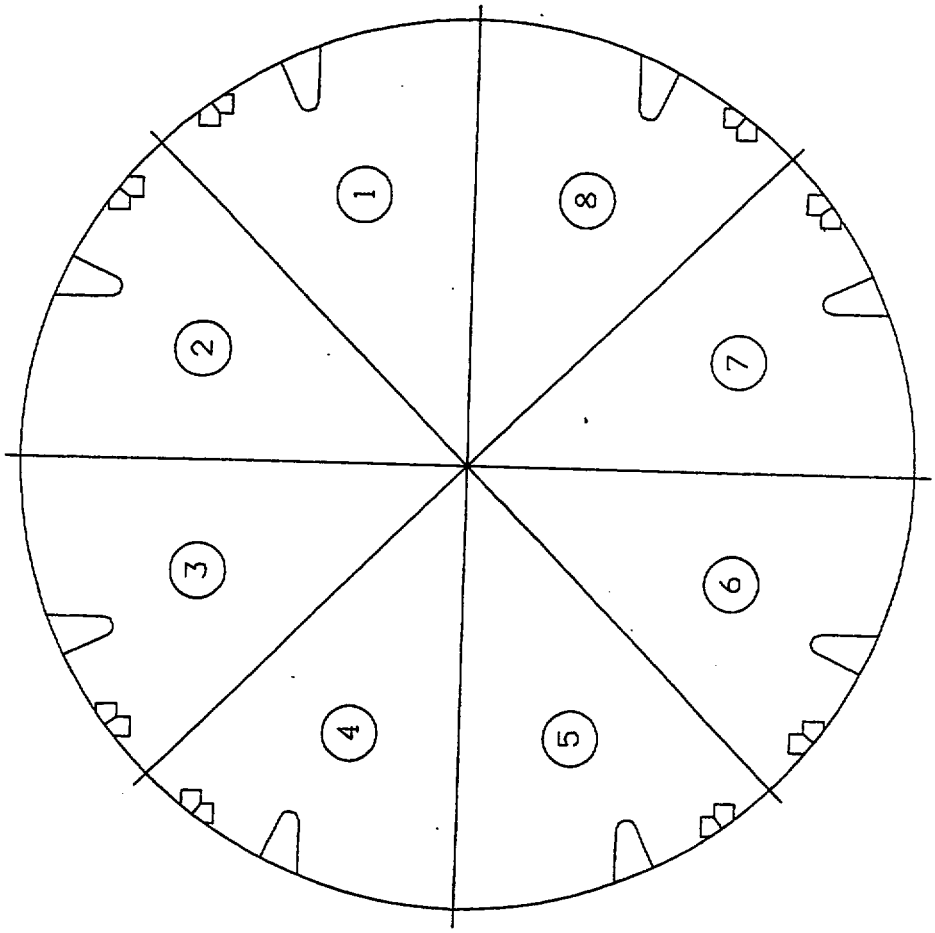
1
2
3
4
5
6
7
8

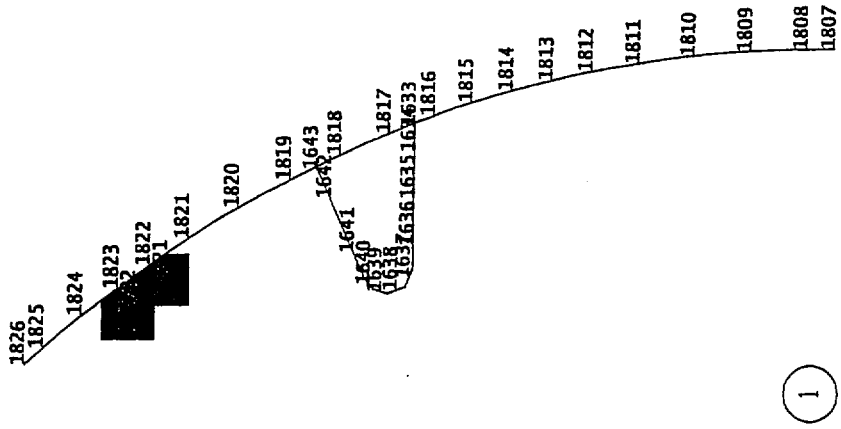
1826
1825
1824
1823
1822
1821
1820
1819
1818
1817
1816
1815
1814
1813
1812
1811
1810
1809
1808
1807
1643
1641
1633
1635
1636
1637
1638
1639
1640
1
[redacted]

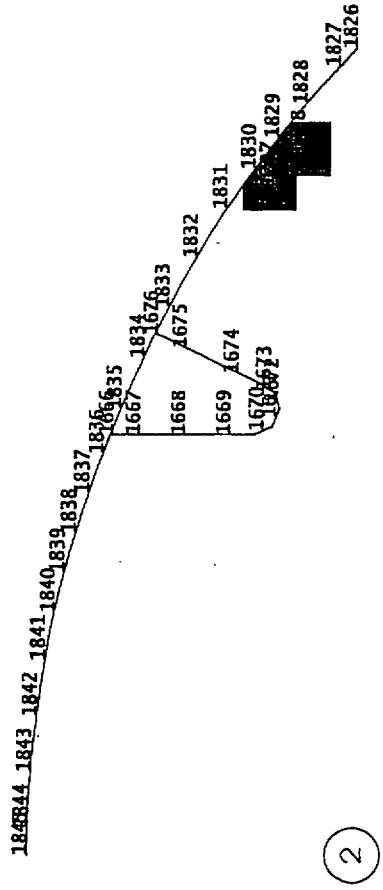
1826
1827
1828
1829
1830
1831
1832
1833
1834
1835
1836
1837
1838
1839
1840
1841
1842
1843
1844
1845
1667
1668
1669
1670
1671
1672
1673
1674
1675
1676
2

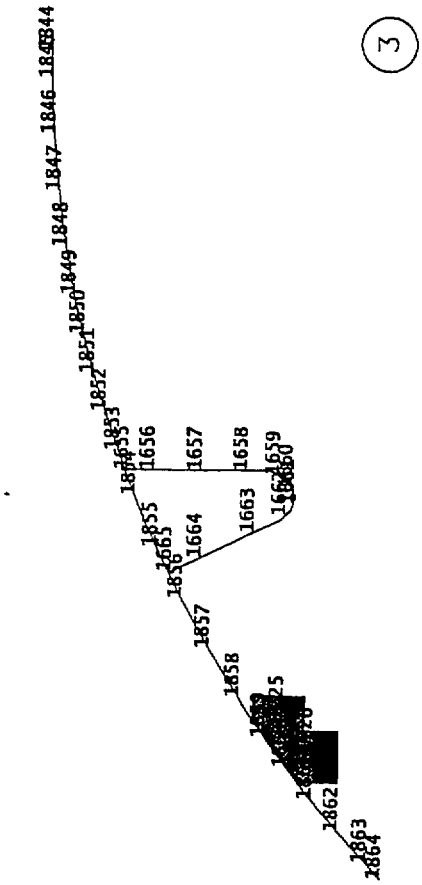
1844
1846
1847
1848
1849
1850
1851
1852
1656
1657
1658
1659
1663
1664
1665
1857
1858
1862
1863
1864
3

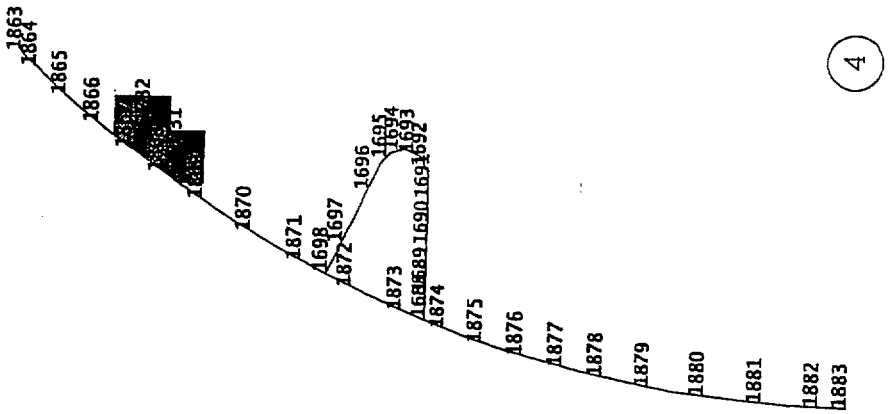
1863
1864
1865
1866
1870
1871
1698
1697
1872
1696
1695
1694
1693
1692
1873
1874
1875
1876
1877
1878
1879
1880
1881
1882
1883
4

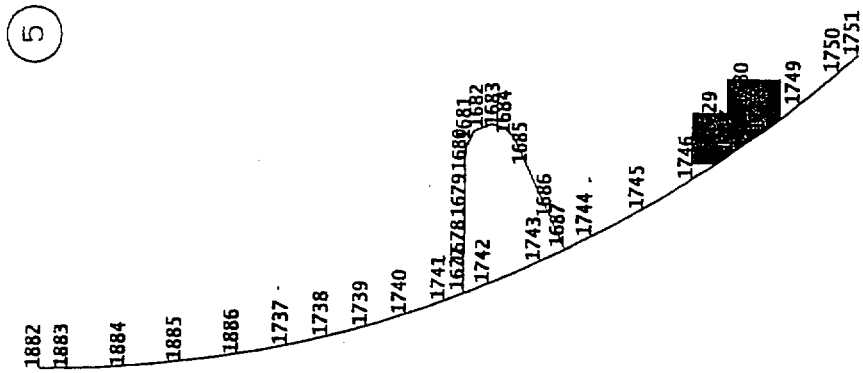
5
1882
1883
1884
1885
1886
1737
1738
1739
1740
1741
1742
1743
1744
1745
1746
1749
1750
1751

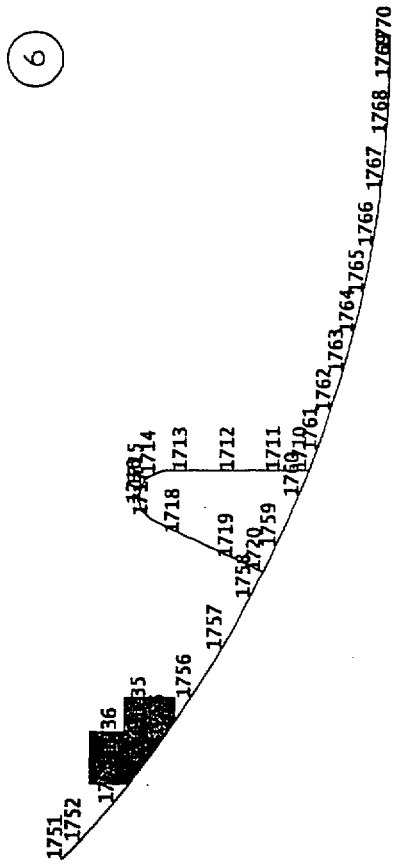
6
1751
1752
36
35
1756
1757
1758
1759
1718
1719
1713
1712
1711
1714
1761
1762
1763
1764
1765
1766
1767
1768
70

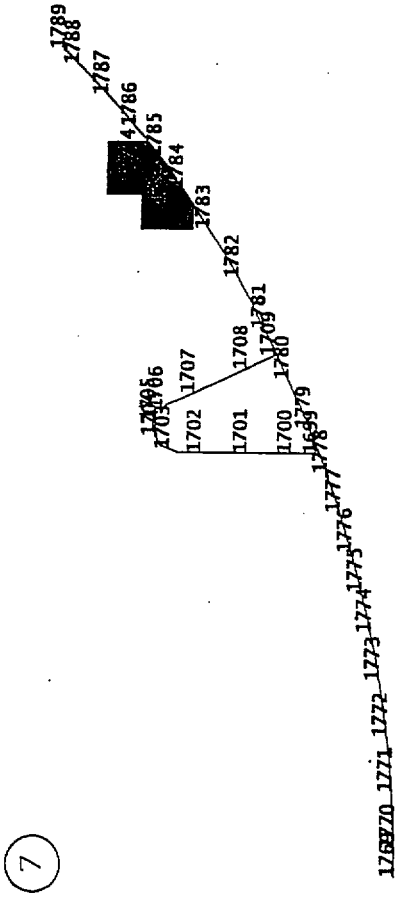
7
1702
1701
1700
1707
1708
1780
1781
1782
1783
1784
1785
1786
1787
1788
1789
1771
1772
1773
1774
1775
1776
1777
1778
1779

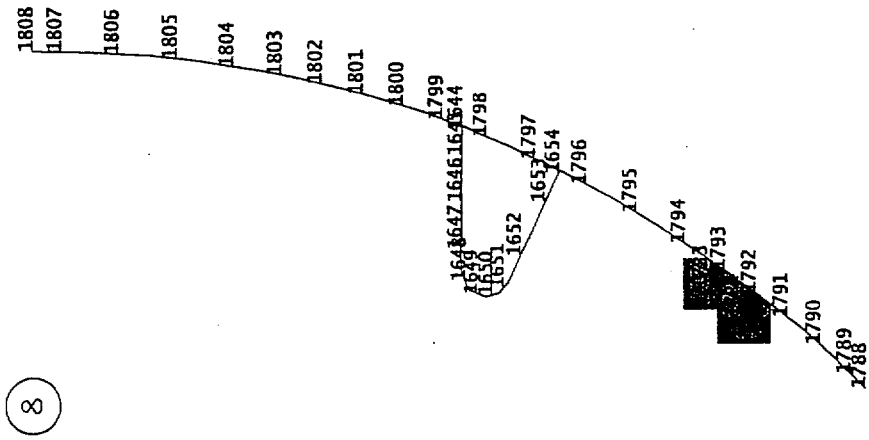
1808
1807
1806
1805
1804
1803
1802
1801
1800
1799
1798
1797
1796
1795
1794
1793
1792
1791
1790
1789
1788
1652
1651
1650
1649
1648
1647
1646
1645
1644
1654
1653
8

Appendix 3.T - Stress Report Locations for the Overpack

Thirteen (13) pages total including cover page

The ANSYS finite element model of the HI-STAR 100 overpack consists of more than 8,000 elements and 11,000 nodes. For such a large model, processing and presenting results on an individual node or element basis is intractable. In order to condense the output and give meaning to the results, 169 nodal points within the overpack model are defined as "stress report locations". These locations are shown in Figures 3.T.1 and 3.T.2. The nodes identified in Figure 3.T.1 as stress report locations are repeated every 45 degrees according to Figure 3.T.2. A unique alphanumeric identifier is assigned to each stress report location. For example, the node that is located in position 13 (Figure 3.T.1) along the 90 degree radial (Figure 3.T.2) is referred to as stress report location "13C". The nodes associated with stress report locations on the axial centerline (positions 1,2,36, and 37 in Figure 3.T.1) are the same for all radial cross sections.

Tables 3.T.1 and 3.T.2 list all stress report locations and their associated node numbers sorted by stress report location and by node number, respectively. These tables allow for conversion from stress report location to node number and vice versa.

The overpack results presented in Appendix 3.AB are listed by node number. To determine the location of a node, first use Table 3.T.2 to find the equivalent stress report location. Figures 3.T.1 and 3.T.2 can then be used to locate the node.

Table 3.T.1

OVERPACK STRESS REPORT LOCATIONS
AND ASSOCIATED NODE NUMBERS
(Sorted by stress report location)

STRESS REPORT LOCATION	NODE NUMBER
1A	501
2A	479
3A	280
4A	281
5A	282
6A	283
7A	284
8A	285
9A	286
10A	287
11A	288
12A	182
13A	183
14A	184
15A	194
16A	195
17A	154
18A	155
19A	156
20A	166
21A	167
22A	126
23A	127
24A	128
25A	138
26A	139
27A	47
28A	48
29A	49
30A	50
31A	51
32A	52
33A	53
34A	54
35A	55
36A	27
37A	1
1B	501
2B	479
3B	2968
4B	2969
5B	2970
6B	2971
7B	2972
8B	2973

Table 3.T.1 (continued)

OVERPACK STRESS REPORT LOCATIONS
AND ASSOCIATED NODE NUMBERS
(Sorted by stress report location)

STRESS REPORT LOCATION	NODE NUMBER
9B	2974
10B	2975
11B	2976
12B	2870
13B	2871
14B	2872
15B	2882
16B	2883
17B	2842
18B	2843
19B	2844
20B	2854
21B	2855
22B	2814
23B	2815
24B	2816
25B	2826
26B	2827
27B	2735
28B	2736
29B	2737
30B	2738
31B	2739
32B	2740
33B	2741
34B	2742
35B	2743
36B	27
37B	1
1C	501
2C	479
3C	5653
4C	5654
5C	5655
6C	5656
7C	5657
8C	5658
9C	5659
10C	5660
11C	5661
12C	5555
13C	5556
14C	5557
15C	5567
16C	5568

Table 3.T.1 (continued)

OVERPACK STRESS REPORT LOCATIONS
AND ASSOCIATED NODE NUMBERS
(Sorted by stress report location)

STRESS REPORT LOCATION	NODE NUMBER
17C	5527
18C	5528
19C	5529
20C	5539
21C	5540
22C	5499
23C	5500
24C	5501
25C	5511
26C	5512
27C	5420
28C	5421
29C	5422
30C	5423
31C	5424
32C	5425
33C	5426
34C	5427
35C	5428
36C	27
37C	1
1D	501
2D	479
3D	8338
4D	8339
5D	8340
6D	8341
7D	8342
8D	8343
9D	8344
10D	8345
11D	8346
12D	8240
13D	8241
14D	8242
15D	8252
16D	8253
17D	8212
18D	8213
19D	8214
20D	8224
21D	8225
22D	8184
23D	8185
24D	8186

Table 3.T.1 (continued)

OVERPACK STRESS REPORT LOCATIONS
AND ASSOCIATED NODE NUMBERS
(Sorted by stress report location)

STRESS REPORT LOCATION	NODE NUMBER
25D	8196
26D	8197
27D	8105
28D	8106
29D	8107
30D	8108
31D	8109
32D	8110
33D	8111
34D	8112
35D	8113
36D	27
37D	1
1E	501
2E	479
3E	11023
4E	11024
5E	11025
6E	11026
7E	11027
8E	11028
9E	11029
10E	11030
11E	11031
12E	10925
13E	10926
14E	10927
15E	10937
16E	10938
17E	10897
18E	10898
19E	10899
20E	10909
21E	10910
22E	10869
23E	10870
24E	10871
25E	10881
26E	10882
27E	10790
28E	10791
29E	10792
30E	10793
31E	10794
32E	10795

Table 3.T.1 (continued)

OVERPACK STRESS REPORT LOCATIONS
AND ASSOCIATED NODE NUMBERS
(Sorted by stress report location)

STRESS REPORT LOCATION	NODE NUMBER
33E	10796
34E	10797
35E	10798
36E	27
37E	1

Table 3.T.2

OVERPACK STRESS REPORT LOCATIONS AND ASSOCIATED NODE NUMBERS
(Sorted by node number)

NODE NUMBER	STRESS REPORT LOCATION
1	37A
27	36A
47	27A
48	28A
49	29A
50	30A
51	31A
52	32A
53	33A
54	34A
55	35A
126	22A
127	23A
128	24A
138	25A
139	26A
154	17A
155	18A
156	19A
166	20A
167	21A
182	12A
183	13A
184	14A
194	15A
195	16A
280	3A
281	4A
282	5A
283	6A
284	7A
285	8A
286	9A
287	10A
288	11A
479	2A
501	1A
2735	27B
2736	28B
2737	29B
2738	30B
2739	31B
2740	32B
2741	33B
2742	34B

Table 3.T.2 (continued)

OVERPACK STRESS REPORT LOCATIONS
AND ASSOCIATED NODE NUMBERS
(Sorted by node number)

NODE NUMBER	STRESS REPORT LOCATION
2743	35B
2814	22B
2815	23B
2816	24B
2826	25B
2827	26B
2842	17B
2843	18B
2844	19B
2854	20B
2855	21B
2870	12B
2871	13B
2872	14B
2882	15B
2883	16B
2968	3B
2969	4B
2970	5B
2971	6B
2972	7B
2973	8B
2974	9B
2975	10B
2976	11B
5420	27C
5421	28C
5422	29C
5423	30C
5424	31C
5425	32C
5426	33C
5427	34C
5428	35C
5499	22C
5500	23C
5501	24C
5511	25C
5512	26C
5527	17C
5528	18C
5529	19C
5539	20C
5540	21C
5555	12C

Table 3.T.2 (continued)

OVERPACK STRESS REPORT LOCATIONS
AND ASSOCIATED NODE NUMBERS
(Sorted by node number)

NODE NUMBER	STRESS REPORT LOCATION
5556	13C
5557	14C
5567	15C
5568	16C
5653	3C
5654	4C
5655	5C
5656	6C
5657	7C
5658	8C
5659	9C
5660	10C
5661	11C
8105	27D
8106	28D
8107	29D
8108	30D
8109	31D
8110	32D
8111	33D
8112	34D
8113	35D
8184	22D
8185	23D
8186	24D
8196	25D
8197	26D
8212	17D
8213	18D
8214	19D
8224	20D
8225	21D
8240	12D
8241	13D
8242	14D
8252	15D
8253	16D
8338	3D
8339	4D
8340	5D
8341	6D
8342	7D
8343	8D
8344	9D
8345	10D

Table 3.T.2 (continued)

OVERPACK STRESS REPORT LOCATIONS
AND ASSOCIATED NODE NUMBERS
(Sorted by node number)

NODE NUMBER	STRESS REPORT LOCATION
8346	11D
10790	27E
10791	28E
10792	29E
10793	30E
10794	31E
10795	32E
10796	33E
10797	34E
10798	35E
10869	22E
10870	23E
10871	24E
10881	25E
10882	26E
10897	17E
10898	18E
10899	19E
10909	20E
10910	21E
10925	12E
10926	13E
10927	14E
10937	15E
10938	16E
11023	3E
11024	4E
11025	5E
11026	6E
11027	7E
11028	8E
11029	9E
11030	10E
11031	11E

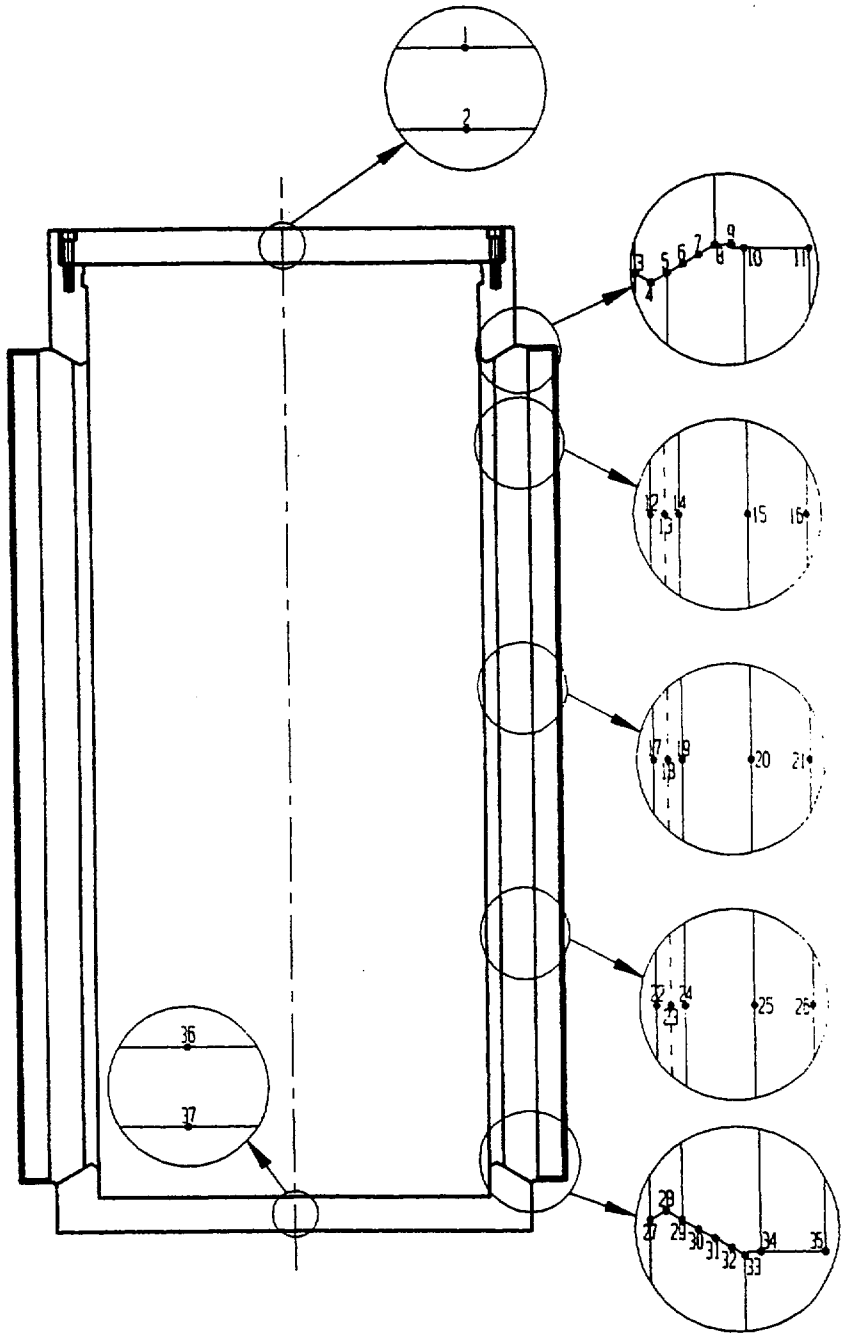

FIGURE 3.T.1; OVERPACK FINITE ELEMENT MODEL STRESS REPORT LOCATIONS

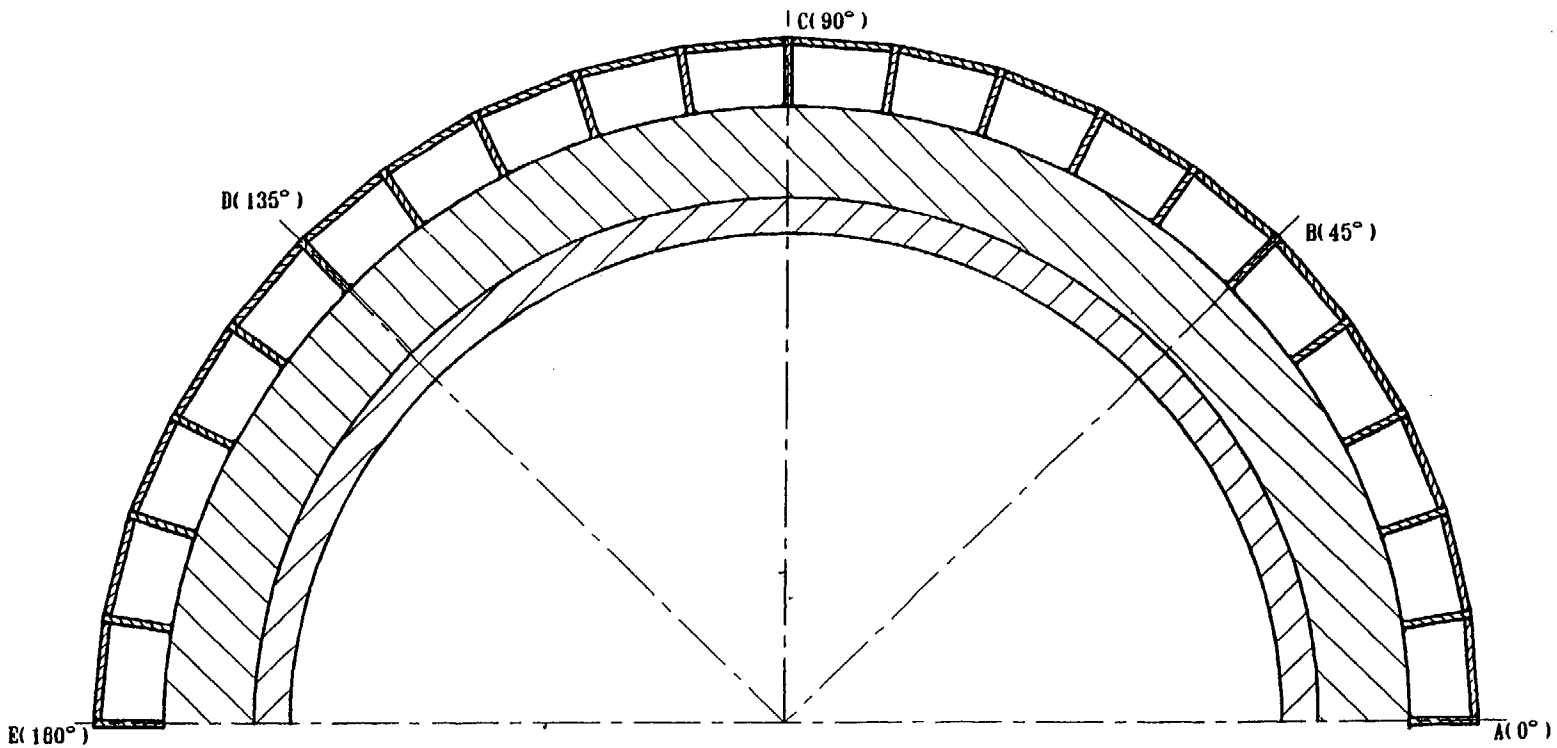

FIGURE 3.T.2; OVERPACK STRESS REPORT LOCATION REFERENCE LINES

APPENDIX 3.U: HI-STAR 100 COMPONENT THERMAL EXPANSIONS; MPC-24

3.U.1 Scope

In this calculation, estimates of operating gaps, both radially and axially, are computed for the fuel basket-to-MPC shell, and for the MPC shell-to-overpack. This calculation is in support of the results presented in Section 3.4.4.2. Two sets of results are presented based on nominal gaps.

3.U.2 Methodology

Bounding temperatures are used to construct temperature distributions that will permit calculation of differential thermal expansions both radially and axially for the basket-to-MPC gaps, and for the MPC-to-overpack gaps. Reference temperatures are set at 70 °F for all components. Temperature distributions are computed at the middle of the HI-STAR 100 System where the temperatures are highest, and also at the top of the system where the temperatures are lowest along the entire length. Subsequent to these calculations and the prediction of radial and axial growths, the average values of the gaps are used to estimate an overall realistic "most probable" growth. A comprehensive nomenclature listing is provided in Section 3.U.7.

3.U.3 References

[3.U.1] Boley and Weiner, Theory of Thermal Stresses, John Wiley, 1960, Sec. 9.10, pp. 288-291.

[3.U.2] Burgreen, Elements of Thermal Stress Analysis, Arcturus Publishers, Cherry Hill, NJ, 1988.

3.U.4 Calculations for Hot Components (Middle of System)

3.U.4.1 Input Data

Based on thermal calculations in Chapter 4, the following temperatures are appropriate at the mid-height of the cask (see Figure 3.U.1).

The temperature change at the inside surface of the overpack, $\Delta T_{1h} := 292 - 70$

The temperature change at the outside neutron absorber enclosure, $\Delta T_{2h} := 229 - 70$

The temperature change at the mean radius of the MPC shell, $\Delta T_{3h} := 332 - 70$

The temperature change at the outside of the MPC basket, $\Delta T_{4h} := (451 - 70) \cdot 1.1$

The temperature change at the center of the basket, $\Delta T_{5h} := 709 - 70$

Note that the outer basket temperature is conservatively amplified by 10% to insure a bounding parabolic distribution. This conservatism serves to maximize the growth of the basket.

The geometry of the components are as follows (referring to Figure 3.U.1)

The outer radius of the overpack, $b := 48 \cdot in$

The inner radius of the overpack, $a := 34.375 \cdot in$

The mean radius of the MPC shell, $R_{mpc} := \frac{68.375 \cdot in - 0.5 \cdot in}{2}$

$$R_{mpc} = 33.938\,in$$

The initial MPC-to-overpack nominal radial clearance at shim locations, $RC_{mo} := 0.09375 \cdot in$

This initial radial clearance value, used to perform a radial growth check, is conservatively based on the MPC outer diameter of 68.5625 in. (see Dwg. 1395, Sh. 4, Note 5). For axial growth calculations for the MPC-to-overpack lid clearance, the axial length of the overpack is defined as the distance from the top of the overpack baseplate to the bottom of the overpack closure lid and the axial length of the MPC is defined as the overall MPC height.

The axial length of the overpack, $L_{ovp} := 191.125 \cdot in$

The axial length of the MPC, $L_{mpc} := 190.5 \cdot in$

The initial MPC-to-overpack nominal axial clearance, $AC_{mo} := L_{ovp} - L_{mpc}$

$$AC_{mo} = 0.625\,in$$

For growth calculations for the fuel basket-to-MPC shell clearances, the axial length of the basket is defined as the total length of the basket and the outer radius of the basket is defined as the mean radius of the MPC shell minus one-half of the shell thickness minus the initial basket-to-shell radial clearance.

The axial length of the basket, $L_{bas} := 176.5 \cdot in$

The initial basket-to-MPC lid nominal axial clearance, $AC_{bm} := 2 \cdot in$

The initial basket-to-MPC shell nominal radial clearance, $RC_{bm} := 0.1875 \cdot in$

The outer radius of the basket, $R_b := R_{mpc} - \frac{0.5}{2} \cdot in - RC_{bm}$

$$R_b = 33.5\,in$$

The coefficients of thermal expansion used in the subsequent calculations are based on the mean temperature of the MPC shell and the peak temperature of the basket.

The coefficient of thermal expansion for the MPC shell, $\alpha_{mpc} := 9.0704 \cdot 10^{-6}$

The coefficient of thermal expansion for the basket, $\alpha_{bas} := 9.769 \cdot 10^{-6}$

3.U.4.2 Thermal Growth of the Overpack

Results for thermal expansion deformation and stress in the overpack are obtained here. The system is replaced by a equivalent uniform hollow cylinder with approximated average properties.

Based on the given inside and outside surface temperatures, the temperature solution in the cylinder is given in the form:

$$C_a + C_b \cdot \ln\left(\frac{r}{a}\right)$$

where,

$$C_a := \Delta T_{1h} \qquad C_a = 222$$

$$C_b := \frac{\Delta T_{2h} - \Delta T_{1h}}{\ln\left(\frac{b}{a}\right)} \qquad C_b = -188.695$$

Next, form the integral relationship:

$$Int := \int_a^b \left[C_a + C_b \cdot \left(\ln\left(\frac{r}{a}\right)\right)\right] \cdot r \, dr$$

The Mathcad program, which was used to create this appendix, is capable of evaluating the integral "Int" either numerically or symbolically. To demonstrate that the results are equivalent, the integral is evaluated both ways in order to qualify the accuracy of any additional integrations that are needed.

The result obtained through numerical integration, $Int = 1.05 \times 10^5 \, in^2$

To perform a symbolic evaluation of the solution the integral "Ints" is defined. This integral is then evaluated using the Maple symbolic math engine built into the Mathcad program as:

$$Int_s := \int_a^b \left[C_a + C_b \cdot \left(\ln\left(\frac{r}{a}\right) \right) \right] \cdot r\, dr$$

$$Int_s := \frac{1}{2} \cdot C_b \cdot \ln\left(\frac{b}{a}\right) \cdot b^2 + \frac{1}{2} \cdot C_a \cdot b^2 - \frac{1}{4} \cdot C_b \cdot b^2 + \frac{1}{4} \cdot C_b \cdot a^2 - \frac{1}{2} \cdot C_a \cdot a^2$$

$$Int_s = 1.05 \times 10^5\, in^2$$

We note that the values of Int and Ints are identical. The average temperature in the overpack cylinder (T_{bar}) is therefore determined as:

$$T_{bar} := \frac{2}{\left(b^2 - a^2\right)} \cdot Int$$

$$T_{bar} = 187.02$$

We estimate the average coefficient of thermal expansion for the overpack by weighting the volume of the various layers. A total of four layers are identified for this calculation. They are:

1) the overpack inner shell
2) the total of the 5 intermediate shells
3) the neutron absorber
4) the outer enclosure shell

Thermal properties are based on estimated temperatures in the component and coefficient of thermal expansion values taken from the tables in Chapter 3. The following averaging calculation involves the thicknesses (t) of the various components, and the estimated coefficients of thermal expansion at the components' mean radial positions. The results of the weighted average process yields an effective coefficient of linear thermal expansion for use in computing radial growth of a solid cylinder (the overpack).

The thicknesses of each component are defined as:

$$t_1 := 2.5 \cdot in$$

$$t_2 := 6 \cdot in$$

$$t_3 := 4.625 \cdot in$$

$$t_4 := 0.5 \cdot in$$

and the corresponding mean radii can therefore be defined as:

$$r_1 := a + .5 \cdot t_1$$

$$r_2 := r_1 + .5 \cdot t_1 + .5 \cdot t_2$$

$$r_3 := r_2 + .5 \cdot t_2 + .5 \cdot t_3$$

$$r_4 := r_3 + .5 \cdot t_3 + .5 \cdot t_4$$

To check the accuracy of these calculations, the outer radius of the overpack is calculated from r_4 and t_4, and the result is compared with the previously defined value (b).

$$b_1 := r_4 + 0.5 \cdot t_4$$

$$b_1 = 48\,\text{in}$$

$$b = 48\,\text{in}$$

We note that the the calculated value b_1 is identical to the previously defined value b. The coefficient of thermal expansion for each component, estimated based on the temperature gradient, are defined as:

$$\alpha_1 := 6.7608 \cdot 10^{-6}$$

$$\alpha_2 := 6.243 \cdot 10^{-6}$$

$$\alpha_3 := 6.125 \cdot 10^{-6}$$

$$\alpha_4 := 6.006 \cdot 10^{-6}$$

Thus, the average coefficient of thermal expansion of the overpack is determined as:

$$\alpha_{avg} := \frac{r_1 \cdot t_1 \cdot \alpha_1 + r_2 \cdot t_2 \cdot \alpha_2 + r_3 \cdot t_3 \cdot \alpha_3 + r_4 \cdot t_4 \cdot \alpha_4}{\frac{a + b}{2} \cdot (t_1 + t_2 + t_3 + t_4)}$$

$$\alpha_{avg} = 6.271 \times 10^{-6}$$

Reference 3.U.1 gives an expression for the radial deformation due to thermal growth. At the inner radius of the overpack (r = a), the radial growth is determined as:

$$\Delta R_{ah} := \alpha_{avg} \cdot a \cdot T_{bar}$$

$$\Delta R_{ah} = 0.04\,\text{in}$$

Similarly, an overestimate of the axial growth of the overpack can be determined by applying the average temperature (T_{bar}) over the entire length of the overpack as:

$$\Delta L_{ovph} := L_{ovp} \cdot \alpha_{avg} \cdot T_{bar}$$

$$\Delta L_{ovph} = 0.224\,\text{in}$$

Estimates of the secondary thermal stresses that develop in the overpack due to the radial temperature variation are determined using a conservatively high value of E as based on the temperature of the steel. The circumferential stress at the inner and outer surfaces (σ_{ca} and σ_{cb}, respectively) are determined as:

The Young's Modulus of the material, $E := 28600000 \cdot \text{psi}$

$$\sigma_{ca} := \alpha_{avg} \cdot \frac{E}{a^2} \cdot \left[2 \cdot \frac{a^2}{(b^2 - a^2)} \cdot \text{Int} - (C_a) \cdot a^2 \right]$$

$$\sigma_{ca} = -6274\,\text{psi}$$

$$\sigma_{cb} := \alpha_{avg} \cdot \frac{E}{b^2} \cdot \left[2 \cdot \frac{b^2}{(b^2 - a^2)} \cdot \text{Int} - \left[C_a + C_b \cdot \left(\ln\left(\frac{b}{a}\right) \right) \right] \cdot b^2 \right]$$

$$\sigma_{cb} = 5026\,\text{psi}$$

The radial stress due to the temperature gradient is zero at both the inner and outer surfaces of the overpack. The radius where a maximum radial stress is expected, and the corresponding radial stress, are determined by trial and error as:

$$N := 0.43$$

$$r := a \cdot (1 - N) + N \cdot b$$

$$r = 40.234\,\text{in}$$

$$\sigma_r := \alpha_{avg} \cdot \frac{E}{r^2} \cdot \left[\frac{r^2 - a^2}{2} \cdot T_{bar} - \int_a^r \left[C_a + C_b \cdot \left(\ln\left(\frac{y}{a}\right) \right) \right] \cdot y \, dy \right]$$

$$\sigma_r = -468.673\,\text{psi}$$

The axial stress developed due to the temperature gradient is equal to the sum of the radial and tangential stresses at any radial location (see Eq. 9.10.7 of [3.U.1]). Therefore, the axial stresses are available from the above calculations. The stress intensities in the overpack due to the temperature distribution are below the Level A membrane stress.

3.U.4.3 Thermal Growth of the MPC Shell

The radial and axial growth of the MPC shell (ΔR_{mpch} and ΔL_{mpch}, respectively) are determined as:

$$\Delta R_{mpch} := \alpha_{mpc} \cdot R_{mpc} \cdot \Delta T_{3h}$$

$$\Delta R_{mpch} = 0.081\,\text{in}$$

$$\Delta L_{mpch} := \alpha_{mpc} \cdot L_{mpc} \cdot \Delta T_{3h}$$

$$\Delta L_{mpch} = 0.453\,\text{in}$$

3.U.4.4 Clearances Between the MPC Shell and Overpack

The final radial and axial MPC shell-to-overpack clearances (RG_{moh} and AG_{moh}, respectively) are determined as:

$$RG_{moh} := RC_{mo} + \Delta R_{ah} - \Delta R_{mpch}$$

$$RG_{moh} = 0.053\,\text{in}$$

$$AG_{moh} := AC_{mo} + \Delta L_{ovph} - \Delta L_{mpch}$$

$$AG_{moh} = 0.396\,\text{in}$$

Note that this axial clearance (AG_{moh}) is based on the temperature distribution at mid-height.

3.U.4.5 Thermal Growth of the MPC-24 Basket

Using formulas given in [3.U.2] for a solid body of revolution, and assuming a parabolic temperature distribution in the radial direction with the center and outer temperatures given previously, the following relationships can be developed for free thermal growth.

Define $\Delta T_{bas} := \Delta T_{5h} - \Delta T_{4h}$ $\qquad \Delta T_{bas} = 219.9$

Then the mean temperature can be defined as $T_{bar} := \frac{2}{R_b^2} \cdot \int_0^{R_b} \left(\Delta T_{5h} - \Delta T_{bas} \cdot \frac{r^2}{R_b^2} \right) \cdot r \, dr$

Using the Maple symbolic engine again, the closed form solution of the integral is:

$$T_{bar} := \frac{2}{R_b^2} \cdot \left(\frac{-1}{4} \cdot \Delta T_{bas} \cdot R_b^2 + \frac{1}{2} \cdot \Delta T_{5h} \cdot R_b^2 \right)$$

$$T_{bar} = 529.05$$

The corresponding radial growth at the periphery (ΔR_{bh}) is therefore determined as:

$$\Delta R_{bh} := \alpha_{bas} \cdot R_b \cdot T_{bar}$$

$$\Delta R_{bh} = 0.173 \text{ in}$$

and the corresponding axial growth (ΔL_{bas}) is determined from [3.U.2] as:

$$\Delta L_{bh} := \Delta R_{bh} \cdot \frac{L_{bas}}{R_b}$$

$$\Delta L_{bh} = 0.912 \text{ in}$$

Note that the coefficient of thermal expansion for the hottest basket temperature has been used, and the results are therefore conservative.

3.U.4.6 Clearances Between the Fuel Basket and MPC Shell

The final radial and axial fuel basket-to-MPC shell and lid clearances (RG_{bmh} and AG_{bmh}, respectively) are determined as:

$$RG_{bmh} := RC_{bm} - \Delta R_{bh} + \Delta R_{mpch}$$

$$RG_{bmh} = 0.095 \text{ in}$$

$$AG_{bmh} := AC_{bm} - \Delta L_{bh} + \Delta L_{mpch}$$

$$AG_{bmh} = 1.541 \text{ in}$$

3.U.5 Calculations for Cold Components (Top of System)

3.U.5.1 Input Data

Based on thermal calculations in Chapter 4, the following temperatures are appropriate at the top end of the cask.

The temperature change at the inside surface of the overpack, $\Delta T_{1c} := 162 - 70$

The temperature change at the outside surface of the overpack, $\Delta T_{2c} := 159 - 70$

The temperature change at the mean radius of the MPC shell, $\Delta T_{3c} := 166 - 70$

The temperature at the center of the MPC basket, $\Delta T_{4c} := 180 - 70$

The temperature at the outside of the MPC basket, $\Delta T_{5c} := 168 - 70$

The coefficient of thermal expansion for the MPC shell is based on the average shell temperature. The coefficient of linear expansion for the basket is based on the highest basket temperature.

The coefficient of thermal expansion for the MPC shell, $\alpha_{mpc} := 8.708 \cdot 10^{-6}$

The coefficient of thermal expansion for the basket, $\alpha_{bas} := 8.742 \cdot 10^{-6}$

3.U.5.2 Thermal Growth of the Overpack

The overpack is replaced by an equivalent uniform hollow cylinder with approximated average properties.

Based on the given inside and outside surface temperatures, the temperature solution in the cylinder is given in the form:

$$C_a + C_b \cdot \ln\left(\frac{r}{a}\right)$$

where,

$$C_a := \Delta T_{1c} \qquad C_a = 92$$

$$C_b := \frac{\Delta T_{2c} - \Delta T_{1c}}{\ln\left(\frac{b}{a}\right)} \qquad C_b = -8.985$$

Next, form the integral relationship:

$$Int_s := \int_a^b \left[C_a + C_b \cdot \left(\ln\left(\frac{r}{a}\right) \right) \right] \cdot r \, dr$$

and solve symbolically as:

$$Int_s := \frac{1}{2} \cdot C_b \cdot \ln\left(\frac{b}{a}\right) \cdot b^2 + \frac{1}{2} \cdot C_a \cdot b^2 - \frac{1}{4} \cdot C_b \cdot b^2 + \frac{1}{4} \cdot C_b \cdot a^2 - \frac{1}{2} \cdot C_a \cdot a^2$$

$$Int_s = 5.069 \times 10^4 \, in^2$$

The average temperature in the overpack cylinder is therefore determined as:

$$T_{bar} := \frac{2}{\left(b^2 - a^2\right)} \cdot Int_s$$

$$T_{bar} = 90.334$$

The average coefficient of thermal expansion for the overpack was previously determined in Section 3.U.4.2. The overpack geometry is unchanged, and the thicknesses and radii of each component are therefore also unchanged. The temperature and corresponding coefficient of thermal expansion for each material, however, are different. The coefficient of thermal expansion for each component, estimated from the temperature gradient, are defined as:

$$\alpha_1 := 6.4374 \cdot 10^{-6}$$

$$\alpha_2 := 5.7532 \cdot 10^{-6}$$

$$\alpha_3 := 5.75 \cdot 10^{-6}$$

$$\alpha_4 := 5.74 \cdot 10^{-6}$$

and the average coefficient of thermal expansion of the overpack is therefore determined as:

$$\alpha := \frac{r_1 \cdot t_1 \cdot \alpha_1 + r_2 \cdot t_2 \cdot \alpha_2 + r_3 \cdot t_3 \cdot \alpha_3 + r_4 \cdot t_4 \cdot \alpha_4}{\frac{a + b}{2} \cdot (t_1 + t_2 + t_3 + t_4)}$$

$$\alpha = 5.86 \times 10^{-6}$$

Once again using the expression from [3.U.1], the radial growth at the inner radius of the overpack is determined as:

$$\Delta R_{ac} := \alpha \cdot a \cdot T_{bar}$$

$$\Delta R_{ac} = 0.018\,\text{in}$$

and the axial growth of the overpack, with uniform temperature T_{bar}, can be determined as:

$$\Delta L_{ovpc} := L_{ovp} \cdot \alpha \cdot T_{bar}$$

$$\Delta L_{ovpc} = 0.101\,\text{in}$$

Estimates of the non-linear thermal stresses due to the radial temperature gradient can also be determined, for a Young's Modulus based on the mean steel temperature. The circumferential stress at the inner and outer surfaces (σ_{ca} and σ_{cb}, respectively) are determined as:

The Young's Modulus of the material, $E := 29000000 \cdot \text{psi}$

$$\sigma_{ca} := \alpha \cdot \frac{E}{a^2} \cdot \left[2 \cdot \frac{a^2}{\left(b^2 - a^2\right)} \cdot Int_s - \left(C_a\right) \cdot a^2 \right]$$

$$\sigma_{ca} = -283.072\,\text{psi}$$

$$\sigma_{cb} := \alpha \cdot \frac{E}{b^2} \cdot \left[2 \cdot \frac{b^2}{\left(b^2 - a^2\right)} \cdot Int_s - \left[C_a + C_b \cdot \left(\ln\left(\frac{b}{a}\right) \right) \right] \cdot b^2 \right]$$

$$\sigma_{cb} = 226.751\,\text{psi}$$

As before, the radial stress due to the temperature gradient is zero at the inner and outer surfaces. The maximum stress will occur at the same radial location as previously calculated, and the corresponding maximum stress is determined as:

$$\sigma_r := \alpha \cdot \frac{E}{r^2} \cdot \left[\frac{r^2 - a^2}{2} \cdot T_{bar} - \int_a^r \left[C_a + C_b \cdot \left(\ln\left(\frac{y}{a}\right) \right) \right] \cdot y \, dy \right]$$

$$\sigma_r = -21.146\,\text{psi}$$

The axial stress developed due to the temperature gradient is equal to the sum of the radial and tangential stresses at any radial location (see Eq. 9.10.7 of [3.U.1]). Therefore, the axial stresses are available from the above calculations. The stress intensities in the overpack due to the temperature distribution are below the Level A membrane stress.

3.U.5.3 Thermal Growth of the MPC Shell

The radial and axial growth of the MPC shell (ΔR_{mpcc} and ΔL_{mpcc}, respectively) are determined as:

$$\Delta R_{mpcc} := \alpha_{mpc} \cdot R_{mpc} \cdot \Delta T_{3c}$$

$$\Delta R_{mpcc} = 0.028\,\text{in}$$

$$\Delta L_{mpcc} := \alpha_{mpc} \cdot L_{mpc} \cdot \Delta T_{3c}$$

$$\Delta L_{mpcc} = 0.159\,\text{in}$$

3.U.5.4 Clearance Between the MPC Shell and Overpack

The final radial and axial MPC shell-to-overpack clearances (RG_{moc} and AG_{moc}, respectively) are determined as:

$$RG_{moc} := \left(RC_{mo} + \Delta R_{ac}\right) - \Delta R_{mpcc}$$

$$RG_{moc} = 0.084\,\text{in}$$

$$AG_{moc} := AC_{mo} + \Delta L_{ovpc} - \Delta L_{mpcc}$$

$$AG_{moc} = 0.567\,\text{in}$$

Note that this axial clearance (AG_{moc}) is based on the temperature distribution at the top end of the system.

3.U.5.5 Thermal Growth of the MPC-24 Basket

Using formulas given in [3.U.2] for a solid body of revolution, and assuming a parabolic temperature in the radial direction with the center and outer temperatures given previously, the following relationships can be developed for free thermal growth.

Define $\Delta T_{bas} := \Delta T_{4c} - \Delta T_{5c}$ $\qquad \Delta T_{bas} = 12$

Then the mean temperature can be defined as $T_{bar} := \frac{2}{R_b^2} \cdot \int_0^{R_b} \left(\Delta T_{4c} - \Delta T_{bas} \cdot \frac{r^2}{R_b^2} \right) \cdot r \, dr$

Solving symbolically, the closed form solution for this integral is determined as:

$$T_{bar} := \frac{2}{R_b^2} \cdot \left(\frac{-1}{4} \cdot \Delta T_{bas} \cdot R_b^2 + \frac{1}{2} \cdot \Delta T_{4c} \cdot R_b^2 \right)$$

$$T_{bar} = 104$$

The corresponding radial growth at the periphery (ΔR_{bc}) is determined as:

$$\Delta R_{bc} := \alpha_{bas} \cdot R_b \cdot T_{bar}$$

$$\Delta R_{bc} = 0.03 \text{ in}$$

and the corresponding axial growth (ΔL_{bas}) is determined from [3.U.2] as:

$$\Delta L_{bc} := \Delta R_{bc} \cdot \frac{L_{bas}}{R_b}$$

$$\Delta L_{bc} = 0.16 \text{ in}$$

3.U.5.6 Clearances Between Fuel Basket and MPC Shell

The final radial and axial fuel basket-to-MPC shell clearances (RG_{bmc} and AG_{bmc}, respectively) are determined as:

$$RG_{bmc} := RC_{bm} - \Delta R_{bc} + \Delta R_{mpcc}$$

$$RG_{bmc} = 0.185 \text{ in}$$

$$AG_{bmc} := AC_{bm} - \Delta L_{bc} + \Delta L_{mpcc}$$

$$AG_{bmc} = 1.999 \text{ in}$$

3.U.6 Summary of Results and Computations of Averaged Final Clearances

The previous results are summarized here and used to predict results based on an average thermal distribution over the length of the unit.

Mid-Height of HI-STAR 100

MPC Shell-to-Overpack	Fuel Basket-to-MPC Shell
$RG_{moh} = 0.053\,in$	$RG_{bmh} = 0.095\,in$
$AG_{moh} = 0.396\,in$	$AG_{bmh} = 1.541\,in$

Top of HI-STAR 100

MPC Shell-to-Overpack	Fuel Basket-ti-MPC Shell
$RG_{moc} = 0.084\,in$	$RG_{bmc} = 0.185\,in$
$AG_{moc} = 0.567\,in$	$AG_{bmc} = 1.999\,in$

The final MPC shell-to-overpack and fuel basket-to-MPC shell clearances are now determined. The final radial and axial MPC shell-to-overpack clearances are determined as:

$$RG_{mo} := \frac{1}{2}\cdot(RG_{moh} + RG_{moc})$$

$$RG_{mo} = 0.068\,in$$

$$AG_{mo} := \frac{1}{2}\cdot(AG_{moh} + AG_{moc})$$

$$AG_{mo} = 0.482\,in$$

and the final radial and axial fuel basket-to-MPC shell clearances are determined as:

$$RG_{bm} := \frac{1}{2}\cdot(RG_{bmh} + RG_{bmc})$$

$$RG_{bm} = 0.14\,in$$

$$AG_{bm} := \frac{1}{2}\cdot(AG_{bmh} + AG_{bmc})$$

$$AG_{bm} = 1.77\,in$$

3.U.7 Nomenclature

a is the inner radius of the overpack
AC_{bm} is the initial fuel basket-to-MPC axial clearance.
AC_{mo} is the initial MPC-to-overpack axial clearance.
AG_{bm} is the average final fuel basket-to-MPC shell gap.
AG_{bmh} (AG_{bmc}) is the final fuel basket-to-MPC shell axial gap for the hot (cold) components.
AG_{mo} is the average final MPC shell-to-overpack axial gap.
AG_{moh} (AG_{moc}) is the final MPC shell-to-overpack axial gap for the hot (cold) components.
b is the outer radius of the overpack.
L_{bas} is the axial length of the fuel basket.
L_{mpc} is the axial length of the MPC.
L_{ovp} is the axial length of the overpack.
r_1 (r_2,r_3,r_4) is mean radius of the overpack inner shell (intermed. shells, neutron absorber, outer shell).
R_b is the outer radius of the fuel basket.
R_{mpc} is the mean radius of the MPC shell.
RC_{bm} is the initial fuel basket-to-MPC radial clearance.
RC_{mo} is the initial MPC shell-to-overpack radial clearance.
RG_{bm} is the average final fuel basket-to-MPC shell gap.
RG_{bmh} (RG_{bmc}) is the final fuel basket-to-MPC shell radial gap for the hot (cold) components.
RG_{mo} is the average final MPC shell-to-overpack radial gap.
RG_{moh} (RG_{moc}) is the final MPC shell-to-overpack radial gap for the hot (cold) components.
t_1 (t_2,t_3,t_4) is the thickness of the overpack inner shell (intermed. shells, neutron absorber, outer shell).
T_{bar} is the average temperature of the overpack cylinder.
α_1 (α_2,α_3,α_4) is the coefficient of thermal expansion of the overpack inner shell (intermed. shells, neutron absorber, outer shell).
α_{avg} is the average coefficient of thermal expansion of the overpack.
α_{bas} is the coefficient of thermal expansion of the overpack.
α_{mpc} is the coefficient of thermal expansion of the MPC.
ΔL_{bh} (ΔL_{bc}) is the axial growth of the fuel basket for the hot components.
ΔL_{mpch} (ΔL_{mpcc}) the the axial growth of the MPC for the hot (cold) components.
ΔL_{ovph} (ΔL_{ovpc}) is the axial growth of the overpack for the hot (cold) components.
ΔR_{ah} (ΔR_{ac}) is the radial growth of the overpack inner radius for the hot (cold) components.
ΔR_{bh} (ΔR_{bc}) is the radial growth of the fuel basket for the hot components.

ΔR_{mpch} (ΔR_{mpcc}) is the radial growth of the MPC shell for the hot (cold) components.

ΔT_{1h} (ΔT_{1c}) is the temperature change at the overpack inside surface for hot (cold) components.

ΔT_{2h} (ΔT_{2c}) is the temperature change at the outside enclosure shell surface for hot (cold) components.

ΔT_{3h} (ΔT_{3c}) is the temperature change at the MPC shell mean radius for hot (cold) components.

ΔT_{4h} (ΔT_{4c}) is the temperature change at the MPC basket periphery for hot (cold) components.

ΔT_{5h} (ΔT_{5c}) is the temperature change at the MPC basket centerline for hot (cold) components.

ΔT_{bas} is the fuel basket centerline-to-periphery temperature gradient.

σ_{ca} is the circumferential stress at the overpack inner surface.

σ_{cb} is the circumferential stress at the overpack outer surface.

σ_r is the maximum radial stress of the overpack.

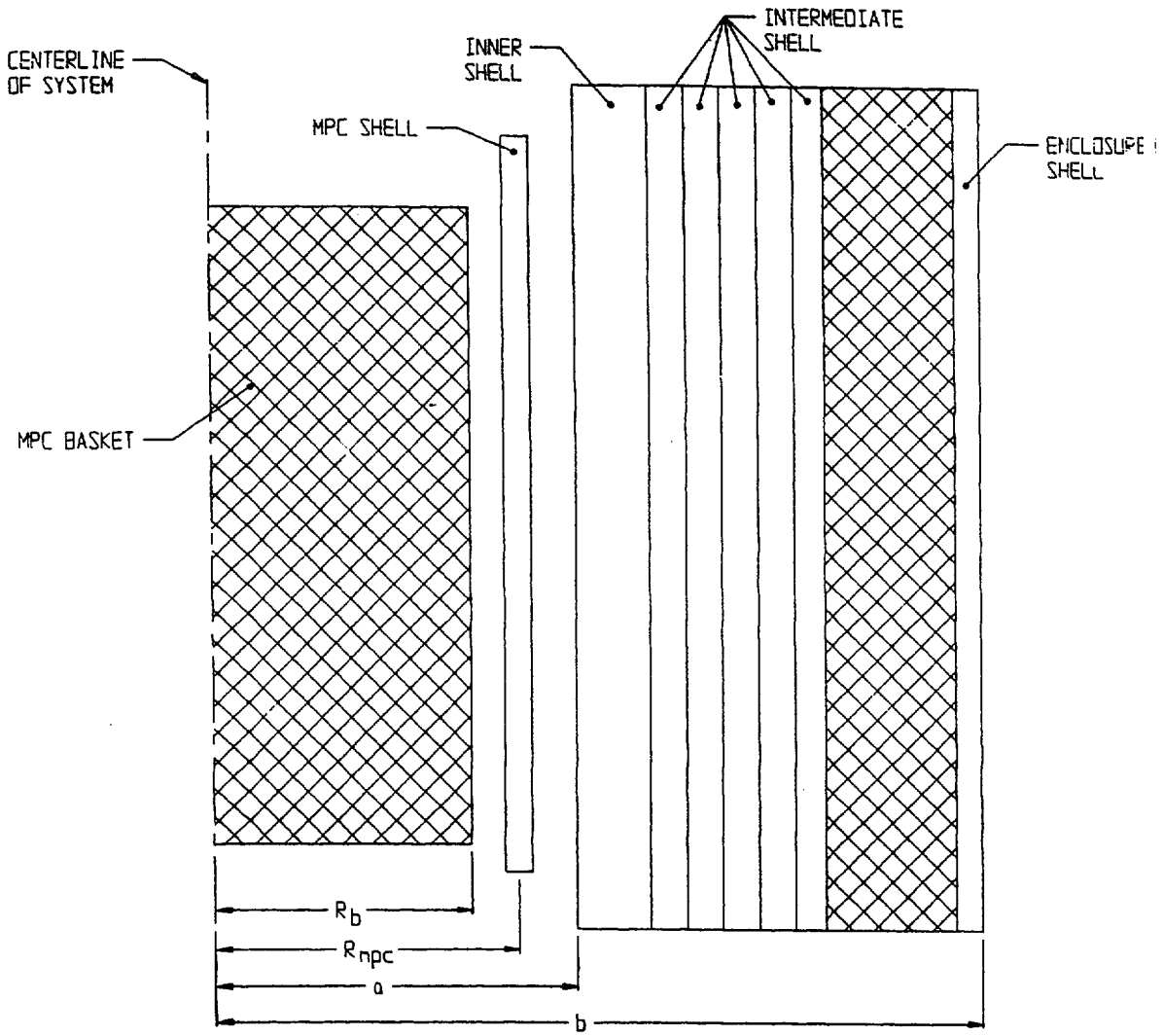

FIGURE 3.U.1; GEOMETRY OF SECTION FOR THERMAL EXPANSION CALCULATIONS

Appendix 3.V -

DELETED

APPENDIX 3.W: HI-STAR 100 COMPONENT THERMAL EXPANSIONS; MPC-68

3.W.1 Scope

In this calculation, estimates of operating gaps, both radially and axially, are computed for the fuel basket-to-MPC shell, and for the MPC shell-to-overpack. This calculation is in support of the results presented in Section 3.4.4.2. Two sets of results are presented based on nominal gaps.

3.W.2 Methodology

Bounding temperatures are used to construct temperature distributions that will permit calculation of differential thermal expansions both radially and axially for the basket-to-MPC gaps, and for the MPC-to-overpack gaps. Reference temperatures are set at 70 °F for all components. Temperature distributions are computed at the middle of the HI-STAR 100 System where the temperatures are highest, and also at the top of the system where the temperatures are lowest along the entire length. Subsequent to these calculations and the prediction of radial and axial growths, the average values of the gaps are used to estimate an overall realistic "most probable" growth. A comprehensive nomenclature listing is provided in Section 3.W.7.

3.W.3 References

[3.W.1] Boley and Weiner, Theory of Thermal Stresses, John Wiley, 1960, Sec. 9.10, pp. 288-291.

[3.W.2] Burgreen, Elements of Thermal Stress Analysis, Arcturus Publishers, Cherry Hill, NJ, 1988.

3.W.4 Calculations for Hot Components (Middle of System)

3.W.4.1 Input Data

Based on thermal calculations in Chapter 4, the following temperatures are appropriate at the mid-height of the cask (see Figure 3.W.1).

The temperature change at the inside surface of the overpack, $\Delta T_{1h} := 292 - 70$

The temperature change at the outside neutron absorber enclosure, $\Delta T_{2h} := 228 - 70$

The temperature change at the mean radius of the MPC shell, $\Delta T_{3h} := 331 - 70$

The temperature change at the outside of the MPC basket, $\Delta T_{4h} := (393 - 70) \cdot 1.1$

The temperature change at the center of the basket, $\Delta T_{5h} := 725 - 70$

Note that the outer basket temperature is conservatively amplified by 10% to insure a bounding parabolic distribution. This conservatism serves to maximize the growth of the basket.

The geometry of the components are as follows (referring to Figure 3.W.1)

The outer radius of the overpack, $b := 48 \cdot in$

The inner radius of the overpack, $a := 34.375 \cdot in$

The mean radius of the MPC shell, $R_{mpc} := \frac{68.375 \cdot in - 0.5 \cdot in}{2}$

$$R_{mpc} = 33.938\,in$$

The initial MPC-to-overpack nominal radial clearance at shim locations, $RC_{mo} := 0.09375 \cdot in$

This initial radial clearance value, used to perform a radial growth check, is conservatively based on the MPC outer diameter of 68.5625 in. (see Dwg. 1395, Sh. 4, Note 5). For axial growth calculations for the MPC-to-overpack lid clearance, the axial length of the overpack is defined as the distance from the top of the overpack baseplate to the bottom of the overpack closure lid and the axial length of the MPC is defined as the overall MPC height.

The axial length of the overpack, $L_{ovp} := 191.125 \cdot in$

The axial length of the MPC, $L_{mpc} := 190.5 \cdot in$

The initial MPC-to-overpack nominal axial clearance, $AC_{mo} := L_{ovp} - L_{mpc}$

$$AC_{mo} = 0.625\,in$$

For growth calculations for the fuel basket-to-MPC shell clearances, the axial length of the basket is defined as the total length of the basket and the outer radius of the basket is defined as the mean radius of the MPC shell minus one-half of the shell thickness minus the initial basket-to-shell radial clearance.

The axial length of the basket, $L_{bas} := 176.5 \cdot in$

The initial basket-to-MPC lid nominal axial clearance, $AC_{bm} := 2 \cdot in$

The initial basket-to-MPC shell nominal radial clearance, $RC_{bm} := 0.1875 \cdot in$

The outer radius of the basket, $R_b := R_{mpc} - \frac{0.5}{2} \cdot in - RC_{bm}$

$$R_b = 33.5\,in$$

The coefficients of thermal expansion used in the subsequent calculations are based on the mean temperature of the MPC shell and the peak temperature of the basket.

The coefficient of thermal expansion for the MPC shell, $\alpha_{mpc} := 9.0682 \cdot 10^{-6}$

The coefficient of thermal expansion for the basket, $\alpha_{bas} := 9.785 \cdot 10^{-6}$

3.W.4.2 Thermal Growth of the Overpack

Results for thermal expansion deformation and stress in the overpack are obtained here. The system is replaced by a equivalent uniform hollow cylinder with approximated average properties.

Based on the given inside and outside surface temperatures, the temperature solution in the cylinder is given in the form:

$$C_a + C_b \cdot \ln\left(\frac{r}{a}\right)$$

where,

$$C_a := \Delta T_{1h} \qquad C_a = 222$$

$$C_b := \frac{\Delta T_{2h} - \Delta T_{1h}}{\ln\left(\frac{b}{a}\right)} \qquad C_b = -191.691$$

Next, form the integral relationship:

$$Int := \int_a^b \left[C_a + C_b \cdot \left(\ln\left(\frac{r}{a}\right)\right)\right] \cdot r \, dr$$

The Mathcad program, which was used to create this appendix, is capable of evaluating the integral "Int" either numerically or symbolically. To demonstrate that the results are equivalent, the integral is evaluated both ways in order to qualify the accuracy of any additional integrations that are needed.

The result obtained through numerical integration, $Int = 1.046 \times 10^5 \, in^2$

To perform a symbolic evaluation of the solution the integral "Ints" is defined. This integral is then evaluated using the Maple symbolic math engine built into the Mathcad program as:

$$Int_s := \int_a^b \left[C_a + C_b \cdot \left(\ln\left(\frac{r}{a}\right) \right) \right] \cdot r \, dr$$

$$Int_s := \frac{1}{2} \cdot C_b \cdot \ln\left(\frac{b}{a}\right) \cdot b^2 + \frac{1}{2} \cdot C_a \cdot b^2 - \frac{1}{4} \cdot C_b \cdot b^2 + \frac{1}{4} \cdot C_b \cdot a^2 - \frac{1}{2} \cdot C_a \cdot a^2$$

$$Int_s = 1.046 \times 10^5 \, in^2$$

We note that the values of Int and Ints are identical. The average temperature in the overpack cylinder (T_{bar}) is therefore determined as:

$$T_{bar} := \frac{2}{(b^2 - a^2)} \cdot Int$$

$$T_{bar} = 186.465$$

We estimate the average coefficient of thermal expansion for the overpack by weighting the volume of the various layers. A total of four layers are identified for this calculation. They are:

1) the overpack inner shell
2) the total of the 5 intermediate shells
3) the neutron absorber
4) the outer enclosure shell

Thermal properties are based on estimated temperatures in the component and coefficient of thermal expansion values taken from the tables in Chapter 3. The following averaging calculation involves the thicknesses (t) of the various components, and the estimated coefficients of thermal expansion at the components' mean radial positions. The results of the weighted average process yields an effective coefficient of linear thermal expansion for use in computing radial growth of a solid cylinder (the overpack).

The thicknesses of each component are defined as:

$$t_1 := 2.5 \cdot in$$

$$t_2 := 6 \cdot in$$

$$t_3 := 4.625 \cdot in$$

$$t_4 := 0.5 \cdot in$$

and the corresponding mean radii can therefore be defined as:

$$r_1 := a + .5 \cdot t_1$$

$$r_2 := r_1 + .5 \cdot t_1 + .5 \cdot t_2$$

$$r_3 := r_2 + .5 \cdot t_2 + .5 \cdot t_3$$

$$r_4 := r_3 + .5 \cdot t_3 + .5 \cdot t_4$$

To check the accuracy of these calculations, the outer radius of the overpack is calculated from r_4 and t_4, and the result is compared with the previously defined value (b).

$$b_1 := r_4 + 0.5 \cdot t_4$$

$$b_1 = 48\,\text{in}$$

$$b = 48\,\text{in}$$

We note that the the calculated value b_1 is identical to the previously defined value b. The coefficient of thermal expansion for each component, estimated based on the temperature gradient, are defined as:

$$\alpha_1 := 6.7608 \cdot 10^{-6}$$

$$\alpha_2 := 6.2328 \cdot 10^{-6}$$

$$\alpha_3 := 6.12 \cdot 10^{-6}$$

$$\alpha_4 := 6.002 \cdot 10^{-6}$$

Thus, the average coefficient of thermal expansion of the overpack is determined as:

$$\alpha_{avg} := \frac{r_1 \cdot t_1 \cdot \alpha_1 + r_2 \cdot t_2 \cdot \alpha_2 + r_3 \cdot t_3 \cdot \alpha_3 + r_4 \cdot t_4 \cdot \alpha_4}{\frac{a + b}{2} \cdot (t_1 + t_2 + t_3 + t_4)}$$

$$\alpha_{avg} = 6.265 \times 10^{-6}$$

Reference 3.W.1 gives an expression for the radial deformation due to thermal growth. At the inner radius of the overpack (r = a), the radial growth is determined as:

$$\Delta R_{ah} := \alpha_{avg} \cdot a \cdot T_{bar}$$

$$\Delta R_{ah} = 0.04\,\text{in}$$

Similarly, an overestimate of the axial growth of the overpack can be determined by applying the average temperature (T_{bar}) over the entire length of the overpack as:

$$\Delta L_{ovph} := L_{ovp} \cdot \alpha_{avg} \cdot T_{bar}$$

$$\Delta L_{ovph} = 0.223\,\text{in}$$

Estimates of the secondary thermal stresses that develop in the overpack due to the radial temperature variation are determined using a conservatively high value of E as based on the temperature of the steel. The circumferential stress at the inner and outer surfaces (σ_{ca} and σ_{cb}, respectively) are determined as:

The Young's Modulus of the material, $E := 28600000 \cdot \text{psi}$

$$\sigma_{ca} := \alpha_{avg} \cdot \frac{E}{a^2} \cdot \left[2 \cdot \frac{a^2}{(b^2 - a^2)} \cdot \text{Int} - (C_a) \cdot a^2 \right]$$

$$\sigma_{ca} = -6367\,\text{psi}$$

$$\sigma_{cb} := \alpha_{avg} \cdot \frac{E}{b^2} \cdot \left[2 \cdot \frac{b^2}{(b^2 - a^2)} \cdot \text{Int} - \left[C_a + C_b \cdot \left(\ln\left(\frac{b}{a}\right) \right) \right] \cdot b^2 \right]$$

$$\sigma_{cb} = 5100\,\text{psi}$$

The radial stress due to the temperature gradient is zero at both the inner and outer surfaces of the overpack. The radius where a maximum radial stress is expected, and the corresponding radial stress, are determined by trial and error as:

$$N := 0.43$$

$$r := a \cdot (1 - N) + N \cdot b$$

$$r = 40.234\,\text{in}$$

$$\sigma_r := \alpha_{avg} \cdot \frac{E}{r^2} \cdot \left[\frac{r^2 - a^2}{2} \cdot T_{bar} - \int_a^r \left[C_a + C_b \cdot \left(\ln\left(\frac{y}{a}\right) \right) \right] \cdot y \, dy \right]$$

$$\sigma_r = -475.628\,\text{psi}$$

The axial stress developed due to the temperature gradient is equal to the sum of the radial and tangential stresses at any radial location (see Eq. 9.10.7 of [3.W.1]). Therefore, the axial stresses are available from the above calculations. The stress intensities in the overpack due to the temperature distribution are below the Level A membrane stress.

3.W.4.3 Thermal Growth of the MPC Shell

The radial and axial growth of the MPC shell (ΔR_{mpch} and ΔL_{mpch}, respectively) are determined as:

$$\Delta R_{mpch} := \alpha_{mpc} \cdot R_{mpc} \cdot \Delta T_{3h}$$

$$\Delta R_{mpch} = 0.08\,in$$

$$\Delta L_{mpch} := \alpha_{mpc} \cdot L_{mpc} \cdot \Delta T_{3h}$$

$$\Delta L_{mpch} = 0.451\,in$$

3.W.4.4 Clearances Between the MPC Shell and Overpack

The final radial and axial MPC shell-to-overpack clearances (RG_{moh} and AG_{moh}, respectively) are determined as:

$$RG_{moh} := RC_{mo} + \Delta R_{ah} - \Delta R_{mpch}$$

$$RG_{moh} = 0.054\,in$$

$$AG_{moh} := AC_{mo} + \Delta L_{ovph} - \Delta L_{mpch}$$

$$AG_{moh} = 0.397\,in$$

Note that this axial clearance (AG_{moh}) is based on the temperature distribution at mid-height.

3.W.4.5 Thermal Growth of the MPC-68 Basket

Using formulas given in [3.W.2] for a solid body of revolution, and assuming a parabolic temperature distribution in the radial direction with the center and outer temperatures given previously, the following relationships can be developed for free thermal growth.

Define $\Delta T_{bas} := \Delta T_{5h} - \Delta T_{4h}$ $\qquad \Delta T_{bas} = 299.7$

Then the mean temperature can be defined as $T_{bar} := \frac{2}{R_b^2} \cdot \int_0^{R_b} \left(\Delta T_{5h} - \Delta T_{bas} \cdot \frac{r^2}{R_b^2} \right) \cdot r \, dr$

Using the Maple symbolic engine again, the closed form solution of the integral is:

$$T_{bar} := \frac{2}{R_b^2} \cdot \left(\frac{-1}{4} \cdot \Delta T_{bas} \cdot R_b^2 + \frac{1}{2} \cdot \Delta T_{5h} \cdot R_b^2 \right)$$

$$T_{bar} = 505.15$$

The corresponding radial growth at the periphery (ΔR_{bh}) is therefore determined as:

$$\Delta R_{bh} := \alpha_{bas} \cdot R_b \cdot T_{bar}$$

$$\Delta R_{bh} = 0.166 \, in$$

and the corresponding axial growth (ΔL_{bas}) is determined from [3.W.2] as:

$$\Delta L_{bh} := \Delta R_{bh} \cdot \frac{L_{bas}}{R_b}$$

$$\Delta L_{bh} = 0.872 \, in$$

Note that the coefficient of thermal expansion for the hottest basket temperature has been used, and the results are therefore conservative.

3.W.4.6 Clearances Between the Fuel Basket and MPC Shell

The final radial and axial fuel basket-to-MPC shell and lid clearances (RG_{bmh} and AG_{bmh}, respectively) are determined as:

$$RG_{bmh} := RC_{bm} - \Delta R_{bh} + \Delta R_{mpch}$$

$$RG_{bmh} = 0.102 \, in$$

$$AG_{bmh} := AC_{bm} - \Delta L_{bh} + \Delta L_{mpch}$$

$$AG_{bmh} = 1.578 \, in$$

3.W.5 Calculations for Cold Components (Top of System)

3.W.5.1 Input Data

Based on thermal calculations in Chapter 4, the following temperatures are appropriate at the top end of the cask.

The temperature change at the inside surface of the overpack, $\Delta T_{1c} := 163 - 70$

The temperature change at the outside surface of the overpack, $\Delta T_{2c} := 160 - 70$

The temperature change at the mean radius of the MPC shell, $\Delta T_{3c} := 167 - 70$

The temperature at the center of the MPC basket, $\Delta T_{4c} := 179 - 70$

The temperature at the outside of the MPC basket, $\Delta T_{5c} := 168 - 70$

The coefficient of thermal expansion for the MPC shell is based on the average shell temperature. The coefficient of linear expansion for the basket is based on the highest basket temperature.

The coefficient of thermal expansion for the MPC shell, $\alpha_{mpc} := 8.7108 \cdot 10^{-6}$

The coefficient of thermal expansion for the basket, $\alpha_{bas} := 8.766 \cdot 10^{-6}$

3.W.5.2 Thermal Growth of the Overpack

The overpack is replaced by an equivalent uniform hollow cylinder with approximated average properties.

Based on the given inside and outside surface temperatures, the temperature solution in the cylinder is given in the form:

$$C_a + C_b \cdot \ln\left(\frac{r}{a}\right)$$

where,

$$C_a := \Delta T_{1c} \qquad C_a = 93$$

$$C_b := \frac{\Delta T_{2c} - \Delta T_{1c}}{\ln\left(\frac{b}{a}\right)} \qquad C_b = -8.985$$

Next, form the integral relationship:

$$Int_s := \int_a^b \left[C_a + C_b \cdot \left(\ln\left(\frac{r}{a}\right) \right) \right] \cdot r \, dr$$

and solve symbolically as:

$$Int_s := \frac{1}{2} \cdot C_b \cdot \ln\left(\frac{b}{a}\right) \cdot b^2 + \frac{1}{2} \cdot C_a \cdot b^2 - \frac{1}{4} \cdot C_b \cdot b^2 + \frac{1}{4} \cdot C_b \cdot a^2 - \frac{1}{2} \cdot C_a \cdot a^2$$

$$Int_s = 5.125 \times 10^4 \, in^2$$

The average temperature in the overpack cylinder is therefore determined as:

$$T_{bar} := \frac{2}{\left(b^2 - a^2\right)} \cdot Int_s$$

$$T_{bar} = 91.334$$

The average coefficient of thermal expansion for the overpack was previously determined in Section 3.W.4.2. The overpack geometry is unchanged, and the thicknesses and radii of each component are therefore also unchanged. The temperature and corresponding coefficient of thermal expansion for each material, however, are different. The coefficient of thermal expansion for each component, estimated from the temperature gradient, are defined as:

$$\alpha_1 := 6.4401 \cdot 10^{-6}$$

$$\alpha_2 := 5.7568 \cdot 10^{-6}$$

$$\alpha_3 := 5.796 \cdot 10^{-6}$$

$$\alpha_4 := 5.746 \cdot 10^{-6}$$

and the average coefficient of thermal expansion of the overpack is therefore determined as:

$$\alpha := \frac{r_1 \cdot t_1 \cdot \alpha_1 + r_2 \cdot t_2 \cdot \alpha_2 + r_3 \cdot t_3 \cdot \alpha_3 + r_4 \cdot t_4 \cdot \alpha_4}{\frac{a + b}{2} \cdot (t_1 + t_2 + t_3 + t_4)}$$

$$\alpha = 5.879 \times 10^{-6}$$

Once again using the expression from [3.W.1], the radial growth at the inner radius of the overpack is determined as:

$$\Delta R_{ac} := \alpha \cdot a \cdot T_{bar}$$

$$\Delta R_{ac} = 0.018\,\text{in}$$

and the axial growth of the overpack, with uniform temperature T_{bar}, can be determined as:

$$\Delta L_{ovpc} := L_{ovp} \cdot \alpha \cdot T_{bar}$$

$$\Delta L_{ovpc} = 0.103\,\text{in}$$

Estimates of the non-linear thermal stresses due to the radial temperature gradient can also be determined, for a Young's Modulus based on the mean steel temperature. The circumferential stress at the inner and outer surfaces (σ_{ca} and σ_{cb}, respectively) are determined as:

The Young's Modulus of the material, $E := 29000000 \cdot \text{psi}$

$$\sigma_{ca} := \alpha \cdot \frac{E}{a^2} \cdot \left[2 \cdot \frac{a^2}{\left(b^2 - a^2\right)} \cdot Int_s - \left(C_a\right) \cdot a^2 \right]$$

$$\sigma_{ca} = -284.007\,\text{psi}$$

$$\sigma_{cb} := \alpha \cdot \frac{E}{b^2} \cdot \left[2 \cdot \frac{b^2}{\left(b^2 - a^2\right)} \cdot Int_s - \left[C_a + C_b \cdot \left(\ln\left(\frac{b}{a}\right) \right) \right] \cdot b^2 \right]$$

$$\sigma_{cb} = 227.5\,\text{psi}$$

As before, the radial stress due to the temperature gradient is zero at the inner and outer surfaces. The maximum stress will occur at the same radial location as previously calculated, and the corresponding maximum stress is determined as:

$$\sigma_r := \alpha \cdot \frac{E}{r^2} \cdot \left[\frac{r^2 - a^2}{2} \cdot T_{bar} - \int_a^r \left[C_a + C_b \cdot \left(\ln\left(\frac{y}{a}\right) \right) \right] \cdot y \, dy \right]$$

$$\sigma_r = -21.216\,\text{psi}$$

The axial stress developed due to the temperature gradient is equal to the sum of the radial and tangential stresses at any radial location (see Eq. 9.10.7 of [3.W.1]). Therefore, the axial stresses are available from the above calculations. The stress intensities in the overpack due to the temperature distribution are below the Level A membrane stress.

3.W.5.3 Thermal Growth of the MPC Shell

The radial and axial growth of the MPC shell (ΔR_{mpcc} and ΔL_{mpcc}, respectively) are determined as:

$$\Delta R_{mpcc} := \alpha_{mpc} \cdot R_{mpc} \cdot \Delta T_{3c}$$

$$\Delta R_{mpcc} = 0.029\,in$$

$$\Delta L_{mpcc} := \alpha_{mpc} \cdot L_{mpc} \cdot \Delta T_{3c}$$

$$\Delta L_{mpcc} = 0.161\,in$$

3.W.5.4 Clearance Between the MPC Shell and Overpack

The final radial and axial MPC shell-to-overpack clearances (RG_{moc} and AG_{moc}, respectively) are determined as:

$$RG_{moc} := (RC_{mo} + \Delta R_{ac}) - \Delta R_{mpcc}$$

$$RG_{moc} = 0.084\,in$$

$$AG_{moc} := AC_{mo} + \Delta L_{ovpc} - \Delta L_{mpcc}$$

$$AG_{moc} = 0.567\,in$$

Note that this axial clearance (AG_{moc}) is based on the temperature distribution at the top end of the system.

3.W.5.5 Thermal Growth of the MPC-68 Basket

Using formulas given in [3.W.2] for a solid body of revolution, and assuming a parabolic temperature in the radial direction with the center and outer temperatures given previously, the following relationships can be developed for free thermal growth.

Define $\Delta T_{bas} := \Delta T_{4c} - \Delta T_{5c}$ $\qquad \Delta T_{bas} = 11$

Then the mean temperature can be defined as $T_{bar} := \frac{2}{R_b^2} \cdot \int_0^{R_b} \left(\Delta T_{4c} - \Delta T_{bas} \cdot \frac{r^2}{R_b^2} \right) \cdot r \, dr$

Solving symbolically, the closed form solution for this integral is determined as:

$$T_{bar} := \frac{2}{R_b^2} \cdot \left(\frac{-1}{4} \cdot \Delta T_{bas} \cdot R_b^2 + \frac{1}{2} \cdot \Delta T_{4c} \cdot R_b^2 \right)$$

$$T_{bar} = 103.5$$

The corresponding radial growth at the periphery (ΔR_{bc}) is determined as:

$$\Delta R_{bc} := \alpha_{bas} \cdot R_b \cdot T_{bar}$$

$$\Delta R_{bc} = 0.03 \text{ in}$$

and the corresponding axial growth (ΔL_{bas}) is determined from [3.W.2] as:

$$\Delta L_{bc} := \Delta R_{bc} \cdot \frac{L_{bas}}{R_b}$$

$$\Delta L_{bc} = 0.16 \text{ in}$$

3.W.5.6 <u>Clearances Between Fuel Basket and MPC Shell</u>

The final radial and axial fuel basket-to-MPC shell clearances (RG_{bmc} and AG_{bmc}, respectively) are determined as:

$$RG_{bmc} := RC_{bm} - \Delta R_{bc} + \Delta R_{mpcc}$$

$$RG_{bmc} = 0.186 \text{ in}$$

$$AG_{bmc} := AC_{bm} - \Delta L_{bc} + \Delta L_{mpcc}$$

$$AG_{bmc} = 2.001 \text{ in}$$

3.W.6 Summary of Results and Computations of Averaged Final Clearances

The previous results are summarized here and used to predict results based on an average thermal distribution over the length of the unit.

Mid-Height of HI-STAR 100

MPC Shell-to-Overpack	Fuel Basket-to-MPC Shell
$RG_{moh} = 0.054\,in$	$RG_{bmh} = 0.102\,in$
$AG_{moh} = 0.397\,in$	$AG_{bmh} = 1.578\,in$

Top of HI-STAR 100

MPC Shell-to-Overpack	Fuel Basket-to-MPC Shell
$RG_{moc} = 0.084\,in$	$RG_{bmc} = 0.186\,in$
$AG_{moc} = 0.567\,in$	$AG_{bmc} = 2.001\,in$

The final MPC shell-to-overpack and fuel basket-to-MPC shell clearances are now determined. The final radial and axial MPC shell-to-overpack clearances are determined as:

$$RG_{mo} := \frac{1}{2}\cdot(RG_{moh} + RG_{moc})$$

$$RG_{mo} = 0.069\,in$$

$$AG_{mo} := \frac{1}{2}\cdot(AG_{moh} + AG_{moc})$$

$$AG_{mo} = 0.482\,in$$

and the final radial and axial fuel basket-to-MPC shell clearances are determined as:

$$RG_{bm} := \frac{1}{2}\cdot(RG_{bmh} + RG_{bmc})$$

$$RG_{bm} = 0.144\,in$$

$$AG_{bm} := \frac{1}{2}\cdot(AG_{bmh} + AG_{bmc})$$

$$AG_{bm} = 1.79\,in$$

3.W.7 Nomenclature

a is the inner radius of the overpack
AC_{bm} is the initial fuel basket-to-MPC axial clearance.
AC_{mo} is the initial MPC-to-overpack axial clearance.
AG_{bm} is the average final fuel basket-to-MPC shell gap.
AG_{bmh} (AG_{bmc}) is the final fuel basket-to-MPC shell axial gap for the hot (cold) components.
AG_{mo} is the average final MPC shell-to-overpack axial gap.
AG_{moh} (AG_{moc}) is the final MPC shell-to-overpack axial gap for the hot (cold) components.
b is the outer radius of the overpack.
L_{bas} is the axial length of the fuel basket.
L_{mpc} is the axial length of the MPC.
L_{ovp} is the axial length of the overpack.
r_1 (r_2,r_3,r_4) is mean radius of the overpack inner shell (intermed. shells, neutron absorber, outer shell).
R_b is the outer radius of the fuel basket.
R_{mpc} is the mean radius of the MPC shell.
RC_{bm} is the initial fuel basket-to-MPC radial clearance.
RC_{mo} is the initial MPC shell-to-overpack radial clearance.
RG_{bm} is the average final fuel basket-to-MPC shell gap.
RG_{bmh} (RG_{bmc}) is the final fuel basket-to-MPC shell radial gap for the hot (cold) components.
RG_{mo} is the average final MPC shell-to-overpack radial gap.
RG_{moh} (RG_{moc}) is the final MPC shell-to-overpack radial gap for the hot (cold) components.
t_1 (t_2,t_3,t_4) is the thickness of the overpack inner shell (intermed. shells, neutron absorber, outer shell).
T_{bar} is the average temperature of the overpack cylinder.
α_1 (α_2,α_3,α_4) is the coefficient of thermal expansion of the overpack inner shell (intermed. shells, neutron absorber, outer shell).
α_{avg} is the average coefficient of thermal expansion of the overpack.
α_{bas} is the coefficient of thermal expansion of the overpack.
α_{mpc} is the coefficient of thermal expansion of the MPC.
ΔL_{bh} (ΔL_{bc}) is the axial growth of the fuel basket for the hot components.
ΔL_{mpch} (ΔL_{mpcc}) the the axial growth of the MPC for the hot (cold) components.
ΔL_{ovph} (ΔL_{ovpc}) is the axial growth of the overpack for the hot (cold) components.
ΔR_{ah} (ΔR_{ac}) is the radial growth of the overpack inner radius for the hot (cold) components.
ΔR_{bh} (ΔR_{bc}) is the radial growth of the fuel basket for the hot components.

ΔR_{mpch} (ΔR_{mpcc}) is the radial growth of the MPC shell for the hot (cold) components.

ΔT_{1h} (ΔT_{1c}) is the temperature change at the overpack inside surface for hot (cold) components.

ΔT_{2h} (ΔT_{2c}) is the temperature change at the outside enclosure shell surface for hot (cold) components.

ΔT_{3h} (ΔT_{3c}) is the temperature change at the MPC shell mean radius for hot (cold) components.

ΔT_{4h} (ΔT_{4c}) is the temperature change at the MPC basket periphery for hot (cold) components.

ΔT_{5h} (ΔT_{5c}) is the temperature change at the MPC basket centerline for hot (cold) components.

ΔT_{bas} is the fuel basket centerline-to-periphery temperature gradient.

σ_{ca} is the circumferential stress at the overpack inner surface.

σ_{cb} is the circumferential stress at the overpack outer surface.

σ_r is the maximum radial stress of the overpack.

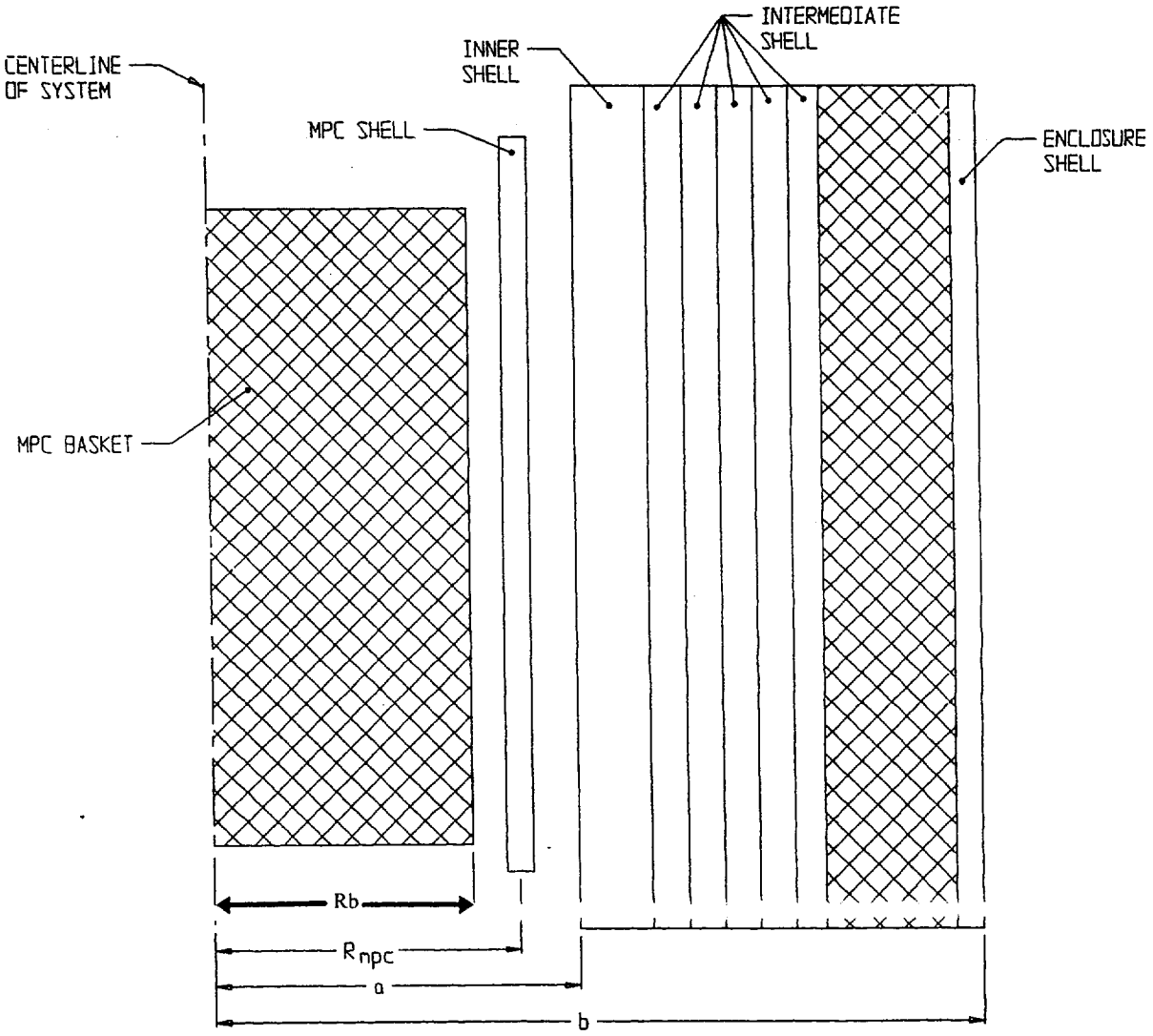

FIGURE 3.W.1; GEOMETRY OF SECTION FOR THERMAL EXPANSION CALCULATIONS

APPENDIX 3.X CALCULATION OF DYNAMIC LOAD FACTORS

3.X.1 Introduction

In Appendix 3.A, the rigid body deceleration sustained by a loaded HI-STAR 100 system under postulated drop events has been calculated. The deceleration profile encompassed by the first half cycle is found to be approximated by a triangular half-wave. It is recognized that the local structural flexibility of the structural members within the cask would modify the net equivalent inertia load for which the member is subjected.

In classical elastic stress analysis, a dynamic load factor (DLF) is determined to reflect the local dynamic effects due to local flexibilities. The DLF is a function of the frequency content of the component being analyzed, the postulated level of structural damping, and the shape and duration of the input load pulse. For most structural elements, it is adequate to compute the fundamental frequency of the element and utilize the classical DLF charts to establish the DLF for the specified impulse. However, in more complicated situations, it is necessary to determine the DLF using a direct numerical formulation. For example, the DLF of the cask bolted cover under a lateral excitation can be readily established from a structural dynamics textbook chart for a wide variety of pulse shapes. On the other hand, the case of lateral excitation of a fuel basket, which involves simultaneous deceleration of the self mass of the panel along with a much heavier fuel assembly mass, requires a direct time integration solution. The fuel assembly is modeled as a lumped compliant mass "riding" the fuel basket panel mass during the impulsive deceleration event. Thus, the fuel basket DLF problem is modeled as a two-degree of freedom system with the basket panel represented by a single degree of freedom mass-spring-damper system (consistent with its fundamental mode) with the added spent nuclear fuel (SNF) mass appended to it, but not permanently affixed. The SNF should be assumed to be plastically connected; i.e., the coefficient of restitution set equal to zero to simulate the absence of springback and to render the dynamic analysis consistent with the "lumped uniform load" modeling of the SNF effect in the static stress analysis of the fuel basket.

Therefore, to cover all structural cases within the cask, both a single-degree of freedom spring-mass-damper system and a multi-mass system with contacting compliant surface, are subject to a pulse load of duration and shape consistent with the dynamic drop analyses to determine the appropriate DLF.

The DLF is defined as the ratio of the peak dynamic displacement of the structural mass when subject to a time dependent pulse force with peak amplitude F, to the corresponding static displacement of the structural mass when subject to the constant force amplitude F. Since the displacement in the dynamic models is related to the elastic internal energy imparted to the component, the calculation of the DLF in this manner properly reflects any increase in the stress levels in a corresponding static analysis.

3.X.2 Analysis Models

3.X.2.1 Components Modeled by Single Degree of Freedom Systems

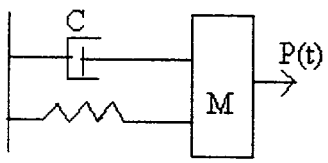

The following items are defined:
c = damping coefficient
M=mass contributing to dynamic motion
k = spring constant
P(t) = pulse loading with peak value F
x(t) = displacement of mass M

If the pulse force is defined as P(t) = F * f(t) where the maximum value of f(t) is 1.0, then F is the peak force magnitude and the static solution x_s may be defined as

$x_s = F/k$

For the determination of the DLF for the cask system, it is appropriate to use a half triangular wave as a pulse, with duration of the pulse equal to t_p. The dynamic load factor (DLF) is the maximum value of the ratio x/x_s that occurs for a total event time >> t_p.

The input triangular pulse shape is defined in Figure 3.X.1.

F is the peak value of the pulse shape and tp is the duration of the half-pulse. The solution for the single degree of freedom undamped system is given in [3.X.3,(Section 4, p125,128)]. The results are reproduced in Figure 3.X.2. The graph plots the ratio of the maximum dynamic response x to the static response F/k (i.e., the DLF) versus the ratio of the triangular pulse duration divided by the period associated with the natural frequency of the single degree of freedom system.

3.X.2.2 Components Modeled by Multiple Degree of Freedom Systems

The MPC fuel basket has been stress analyzed using finite element analysis methods assuming that the applied load is a design basis constant deceleration. The spent fuel mass, which is heavier than a fuel basket panel, is conservatively assumed to be a very compliant component with no structural stiffness and to transfer load to the panel element as a uniform pressure acting on the panel surface. In the actual dynamic environment, the fuel assembly mass is confined, during a drop event, by the surrounding walls of the basket, but is not physically attached to the fuel basket. To derive an appropriate dynamic load factor, the configuration consisting of the confining panels and the fuel mass must be modeled and the assemblage subjected to the appropriate triangular pulse shape and time duration. The peak displacement response of the panel mass is then compared to the static response under a static deceleration having the same peak to define the appropriate DLF. The specific configuration analyzed for determination of dynamic load factors is shown in Figure 3.X.3. The solution to this problem is obtained using the commercial computer code "Working Model" which has been subject to independent Quality Assurance verification and validation at Holtec International. Working Model is ideally suited to the solution of dynamics problems involving multiple masses in contact with each other and is also utilized in the HI-STAR 100 Part 71 SAR submittal for a transport license to analyze impact limiter performance under hypothetical accident conditions. Specific results are reported in a subsequent section of this appendix.

In Figure 3.X.3, the SNF assembly is confined by the basket wall panels; the inertia load resulting from the deceleration pulse is applied to the SNF and to the panels. The structural configuration is simulated by a mass-spring system representing the lower supporting panel, by a compliant lumped mass representing the SNF assembly, and by a second mass-spring system representing the confining panel above the SNF mass The two linear springs represent the structural flexibility of the basket panels. The applied time varying inertia force which is applied to each of the masses is equal to the respective mass multiplied by a triangular shaped pulse with peak value equal to the specified drop deceleration. The compliant spent fuel assembly contact is simulated by using a coefficient of restitution value near zero which is consistent with the assumption in the static stress analysis that the fuel loading is a uniform load over the panel surface because the SNF assembly follows the panel deformation.

In subsequent sections, an evaluation of potential DLF magnitudes is carried out for representative components of HI-STAR. While a number of cask components are examined to determine the fundamental frequency, DLF's are projected only for those components most affected by the storage handling events.

3.X 3 References

[3.X.1] H.A. Rothbart, Mechanical Design and Systems Handbook, 2nd Edition, McGraw Hill, 1985.

[3.X.2] Working Model 3.0, Knowledge Revolution, San Mateo, CA., 1995.

[3.X.3] W.T. Thomson, Theory of Vibration With Applications, 2nd Edition, Prentice Hall, 1981, Section 7.4, p. 220.

[3.X.4] Dynamic Characteristics of an MPC Fuel Basket Panel Subject to Lateral Drops-Preliminary Calculations

The most significant loading level applied to a HI-STAR 100 component occurs during drop conditions. In particular, the fuel basket, under side drop or tipover, may have individual panels subjected to high levels of lateral load. Since the stress analyses of the basket is based on static methods, the results must be amplified by a DLF prior to performing a structural integrity evaluation involving comparison against specified stress or stress intensity levels. As described previously, the DLF depends on the product of component natural frequency and impulse time duration. Appendix 3.A presents the analysis of the postulated drop events appropriate for a 10CFR72 submittal and computes impulse durations. Here we compute appropriate dynamic load factors using the multi-mass model described previously, with deceleration pulse durations and strengths determined in Appendix 3.A. Calculations are made and results obtained for both PWR and BWR fuel baskets.

For the dynamic simulation, the panel flexibilities, the panel fundamental frequency (or period), and the effective panel mass participating in the dynamics of the configuration must be established. The panel section perpendicular to the applied deceleration pulse is modeled by a beam clamped at both ends (to the adjacent perpendicular panel). Figure 3.X.4 defines the configuration and the variables.

From Table 7.1 of [3.X.1], the spring constant of a clamped-clamped beam is given as

$$K := 384 \cdot \frac{E \cdot I}{L^3}$$

Input data for the Holtec MPC-24 basket is(L is the largest panel width, t is the panel metal thickness, and b is equal to the total length of the panel along the axis of HI-STAR).Use of a smaller L, representing only the panel confining the fuel, leads to a higher K and results in a lower dynamic amplification factor. To be conservative, we use the large L associated with the pitch.

$L := 10.777 \cdot in$ $\quad t := \frac{10}{32} \cdot in$ $\quad b := 176.5 \cdot in$

At 725 deg. F the Young's Modulus is $E := 24600000 \cdot psi$ (FSAR Table 3.3.1)

The actual weight of the modeled stainless steel panel is

$W_{actual} := 0.29 \cdot \frac{lbf}{in^3} \cdot b \cdot L \cdot t$ $\quad W_{actual} = 172.3815\, lbf$

Compute the moment of inertia "I" and the cross section area "A" perpendicular to the bending axis.

$I := b \cdot \frac{t^3}{12}$ $\quad A := b \cdot t$

Therefore, the spring constant K is given, for the PWR panel, as (use the entire length "b")

$K := 384 \cdot \frac{E \cdot I}{L^3}$ $\quad K = 3.3876 \times 10^6 \frac{lbf}{in}$

Compute the natural frequency of the panel considered as a clamped-clamped beam.

The natural frequency is computed from a formula and tables given in [3.X.1] (Chap. 5 and Tables 5.8(c) and 5.10). The nomenclature that used in the reference.

$K_m := 0.9 \qquad C_n := 71.95$

Therefore the lowest natural frequency of the panel is

$$f_n := C_n \cdot \frac{\sqrt{\frac{I}{A}}}{L^2} \cdot 10^4 \cdot K_m \cdot \frac{in}{sec} \qquad f_n = 502.964\,sec^{-1} \qquad \tau_{pwr} := \frac{1}{f_n}$$

$$\omega_n := 2 \cdot \pi \cdot f_n \qquad \omega_n = 3.1602 \times 10^3\,sec^{-1} \qquad \tau_{pwr} = 1.9882 \times 10^{-3}\,sec$$

The effective panel mass participating in the dynamic motion is computed as

$$m_e := \frac{K}{\omega_n^2}$$

The effective participating weight of the panel is

$$W_{PWR} := m_e \cdot g \qquad W_{PWR} = 130.9603\,lbf$$

which is, as expected, less than the actual weight.

The calculations are now repeated for a BWR panel

$$L := 6.24 \cdot in \qquad t := \frac{8}{32} \cdot in \qquad b := 176 \cdot in$$

The actual weight of the stainless steel panel is

$$W_{actual} := 0.29 \cdot \frac{lbf}{in^3} \cdot b \cdot L \cdot t \qquad W_{actual} = 79.6224\,lbf$$

Compute the moment of inertia "I" and the cross section area "A" perpendicular to the bending axis.

$$I := b \cdot \frac{t^3}{12} \qquad A := b \cdot t$$

Therefore, the spring constant K is given as

$$K := 384 \cdot \frac{E \cdot I}{L^3} \qquad K = 8.9097 \times 10^6 \frac{lbf}{in}$$

Compute natural frequency of the panel considered as a clamped-clamped beam

$K_m := 0.9$ $\quad C_n := 71.95$

$$f_n := C_n \cdot \frac{\sqrt{\frac{I}{A}}}{L^2} \cdot 10^4 \cdot K_m \cdot \frac{in}{sec} \qquad f_n = 1.2002 \times 10^3 sec^{-1}$$

$$\tau_{bwr} := \frac{1}{f_n} \qquad \tau_{bwr} = 8.3319 \times 10^{-4} sec$$

$$\omega_n := 2 \cdot \pi \cdot f_n \qquad \omega_n = 7.5411 \times 10^3 sec^{-1}$$

The effective mass participating in the dynamic motion is computed as

$$m_e := \frac{K}{\omega_n^2}$$

The effective participating weight of the panel is

$$W_{BWR} := m_e \cdot g \qquad W_{BWR} = 60.4901 \text{ lbf}$$

3.X.5 Analysis for Dynamic Load Factors for the HI-STAR Fuel Basket Subject to Handling Accidents Resulting in a Lateral Deceleration Pulse - Multi-Degree of Freedom System

The data developed in Section 3.X.4 is used as input data in Working Model to determine dynamic amplification factors. The description of the model is provided in Section 3.X.2.2. Fuel weights used in the multi-mass model are the design basis fuel weights (Table 2.1.6). To determine the DLF, the peak deflection of the panel needs to be established. The DLF is obtained as the maximum ratio of the spring force resisting the dynamic deceleration load, divided by the static spring force obtained if the peak value of the deceleration was applied statically. In this simulation, only drop orientations causing lateral panel bending are significant. From Appendix 3.A, g loads for the side drop and for the non-mechanistic tipover are used to establish the DLF. The tipover g load is obtained by scaling the calculated g load at the top end of the overpack by the ratio of the MPC basket height to the overpack height. The maximum resulting load for the MPC basket is 59.81g. The design basis value of 60g is used in this appendix for calculations

$$G_{to} := 60$$

with a triangular pulse duration of 4.5 milliseconds. The quasi-static force in the spring induced by dead load plus drop inertia load is easily computed for the two basket types as

$$Force_PWR_{to} := (1680 \cdot lbf + W_{PWR}) \cdot (G_{to} + 1) \qquad Force_PWR_{to} = 1.1047 \times 10^5 lbf$$

$$Force_BWR_{to} := (700 \cdot lbf + W_{BWR}) \cdot (G_{to} + 1) \qquad Force_BWR_{to} = 4.639 \times 10^4 lbf$$

The Working Model analyses are performed for both types of fuel baskets with deceleration pulses of triangular shape and with a time duration of 0.0045 seconds. In all simulations, the coefficient of restitution between the SNF mass and the panel masses is set to 0.2 to bound the actual fully compliant case. As is noted above, the use of a zero coefficient of restitution is consistent with the completely compliant SNF mass assumption which permeates all of the basket stress analyses. Figures 3.X.5-3.X.6 provide the time history of the force in the loaded lower panel spring for the PWR, BWR baskets, respectively. For each case, the DLF is obtained by dividing the peak dynamic spring force by the static spring forces computed above (note that since the spring forces are linear functions of the panel central deflection, the DLF is directly calculated from the spring force results).

From the results obtained from the multi-degree of freedom dynamic analyses, the DLF's are approximately 1.1 for both the PWR basket and for the BWR basket for the pulse duration considered. The peak value for the dynamic force is achieved at approximately the time when the actual applied force pulse returns to a zero value. The DLF of 1.1 should be applied to all of the static stress results from stress analysis of the basket under lateral loads arising from a handling accident when assessing structural safety factors.

3.X.6 Overpack Top Closure Lid Considered as a Simply Supported Circular Plate

3.X.6.1 Input Data

Outer bolt circle radius $R := \frac{74.75 \cdot in}{2}$ From Holtec Drawings

Lid thickness $h := 6 \cdot in$

3.X.6.2 Calculations

Compute the natural frequency of the lid.

The natural frequency is computed from a formula and tables given in [3.X.1] (Chap. 5 and Tables 5.8(g) and 5.10). The nomenclature that used in the reference.

$K_m := 0.92$ $C_n := 4.84$

Therefore the lowest natural frequency of the lid is

$f_l := C_n \cdot \frac{h}{R^2} \cdot 10^4 \cdot K_m \cdot \frac{in}{sec}$ $f_l = 191.2591\, sec^{-1}$ $\tau_l := \frac{1}{f_l}$

$\tau_l = 5.2285 \times 10^{-3} sec$

3.X.7 MPC Bottom Plate - Clamped at Edge

3.X.7.1 Input Data

Mean radius $R := \frac{(68.375 - .5) \cdot in}{2}$ $R = 33.9375\, in$

Thickness $h := 2.5 \cdot in$

3.X.7.2 Calculations

The natural frequency is computed from a formula and tables given in [3.X.1] (Chap. 5 and Tables 5.8(g) and 5.10). The nomenclature that used in the reference.

$K_m := 0.9$ $C_n := 9.94$

Therefore the lowest natural frequency of the bottom plate is

$f_p := C_n \cdot \frac{h}{R^2} \cdot 10^4 \cdot K_m \cdot \frac{in}{sec}$ $f_p = 194.1821\, sec^{-1}$ $\tau_p := \frac{1}{f_p}$

$\tau_p = 5.1498 \times 10^{-3} sec$

3.X.8 Dynamic Load Factor Upper Bound Estimates for End Drop Event

The impact deceleration pulse duration is obtained from Appendix 3.A as

$$t_p := 0.002 \cdot sec$$

The DLF for the Overpack Top Lid is based on a bottom end drop

$$\frac{t_p}{\tau_l} = 0.3825$$

From Figure 3.X.2, the DLF associated with this ratio is approximately 1.05.

There is no credible dynamic impact event while in storage that would affect the MPC base plate; however, in transport, the MPC base plate would require a DLF in the evaluation of a so called "top end drop".

3.X.9 Conclusions

Dynamic Load Factor Equations have been obtained in this appendix. All stress calculations and safety margins use these dynamic load amplifiers to evaluate the adequacy of final safety margins. For the MPC fuel baskets, modeled by multi-degree of freedom simulations, the DLF is approximately 1.1 for both the MPC-24 and the MPC-68 using an impact duration simulating a handling accident that leads to lateral loading of the fuel basket panels. For other components affected by handling or other dynamic events, and modeled by single degree of freedom systems, the DLF is bounded by the value 1.1.

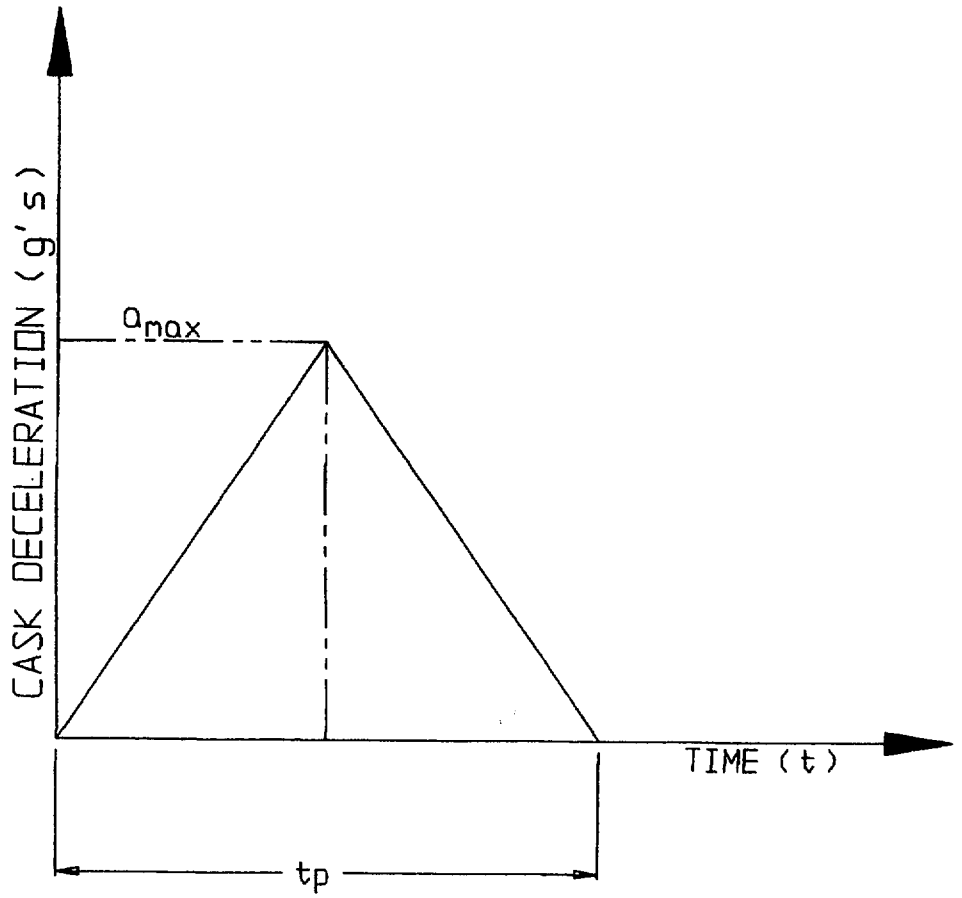

a_{max} :	PEAK g LEVEL (FILTERED DATA)
t_p :	PULSE DURATION (sec)

FIGURE 3.X.1 : TRIANGULAR DECELERATION PULSE SHAPE

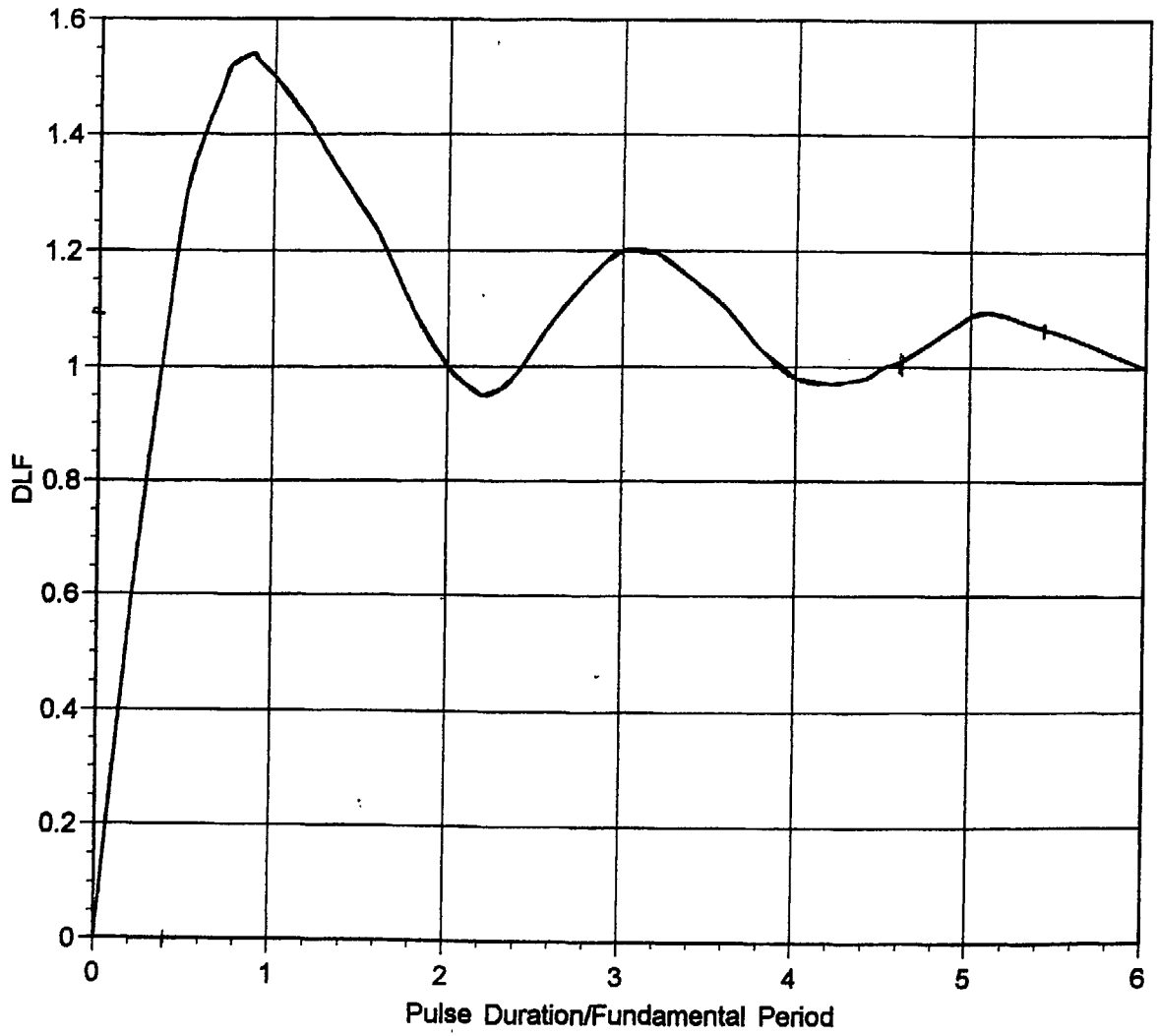

FIGURE 3.X.2 - Dynamic Load Factor for Single Degree of Freedom System - Triangular Pulse Shape, No Damping

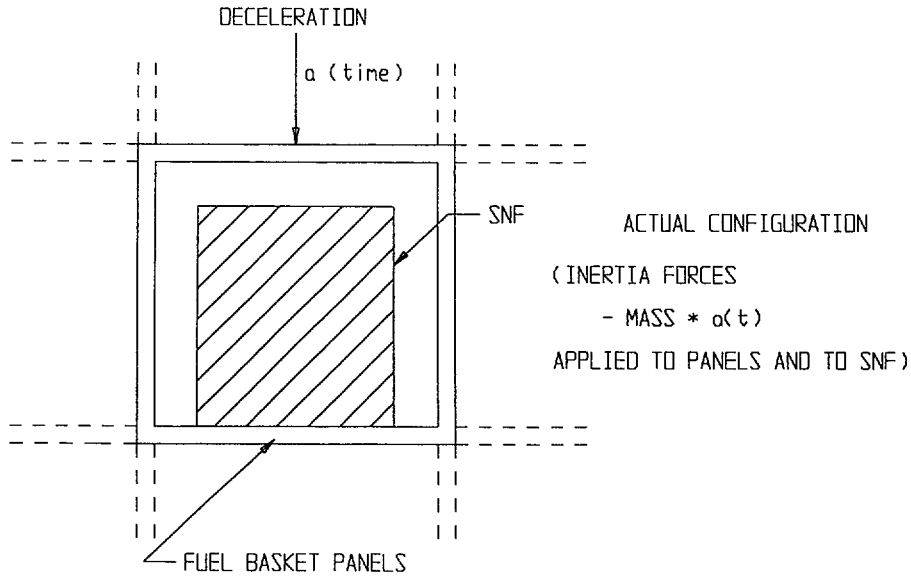

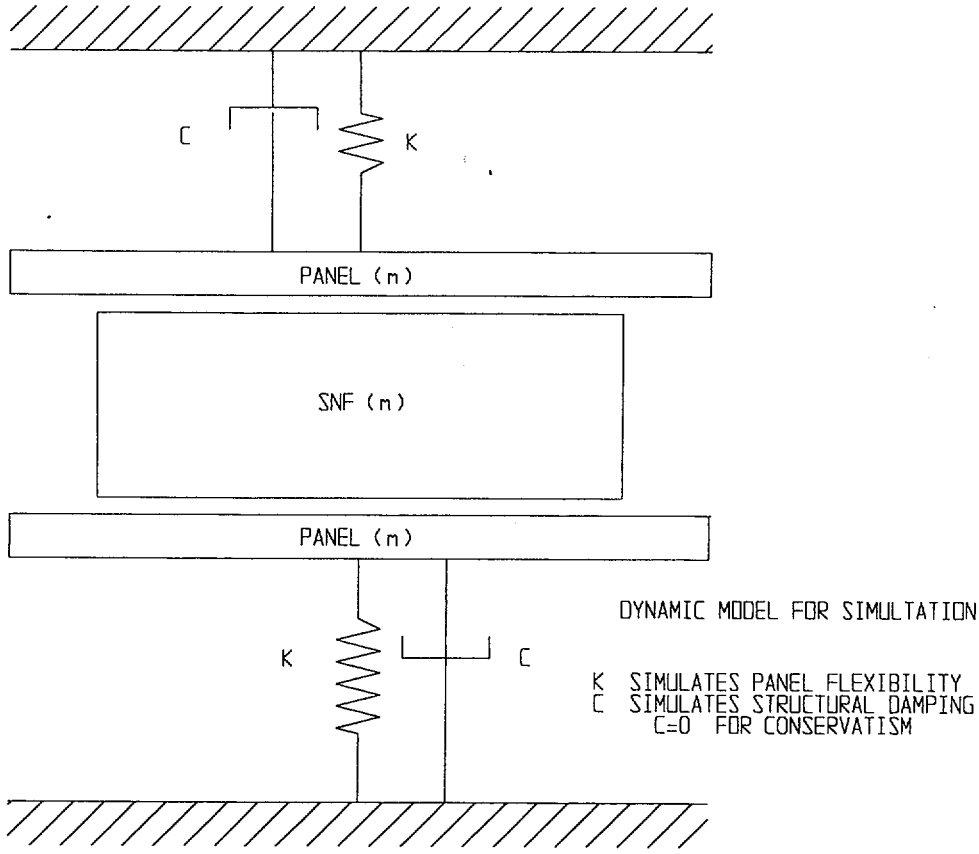

FIGURE 3.X.3; DYNAMIC MODEL FOR MULTI-DEGREE OF FREEDOM ANALYSIS FOR DLF DETERMINATION

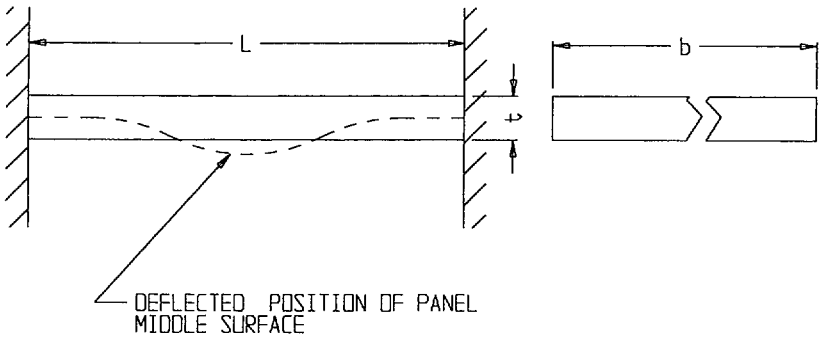

FIGURE 3.X.4; CLAMPED BEAM MODEL FOR FUEL BASKET PANEL

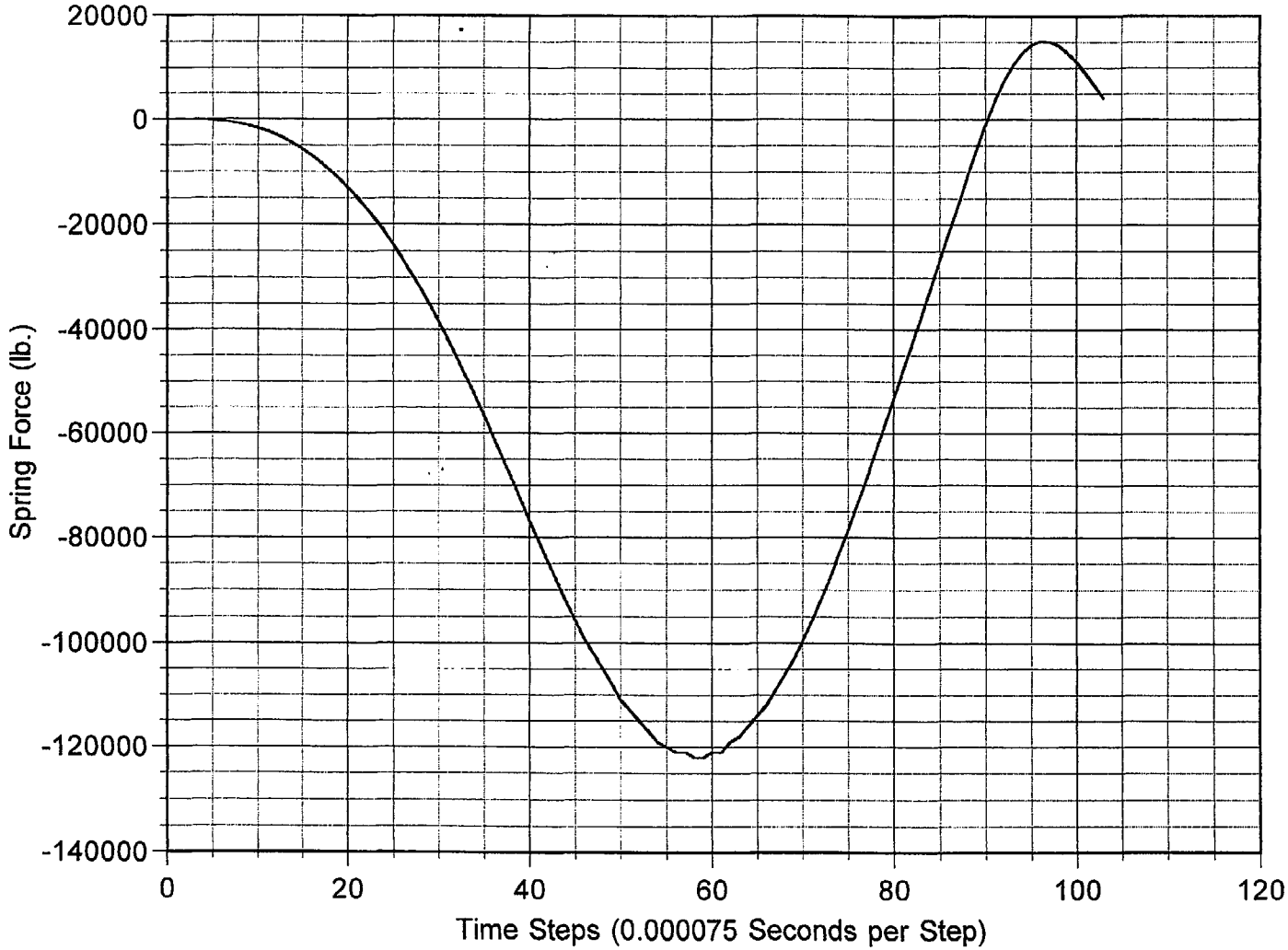

FIGURE 3.X.5 Dynamic Force in Lower Panel Spring vs. Time - PWR Basket, 60g Peak Value of Deceleration, Triangular Pulse, Duration 0.0045 Seconds

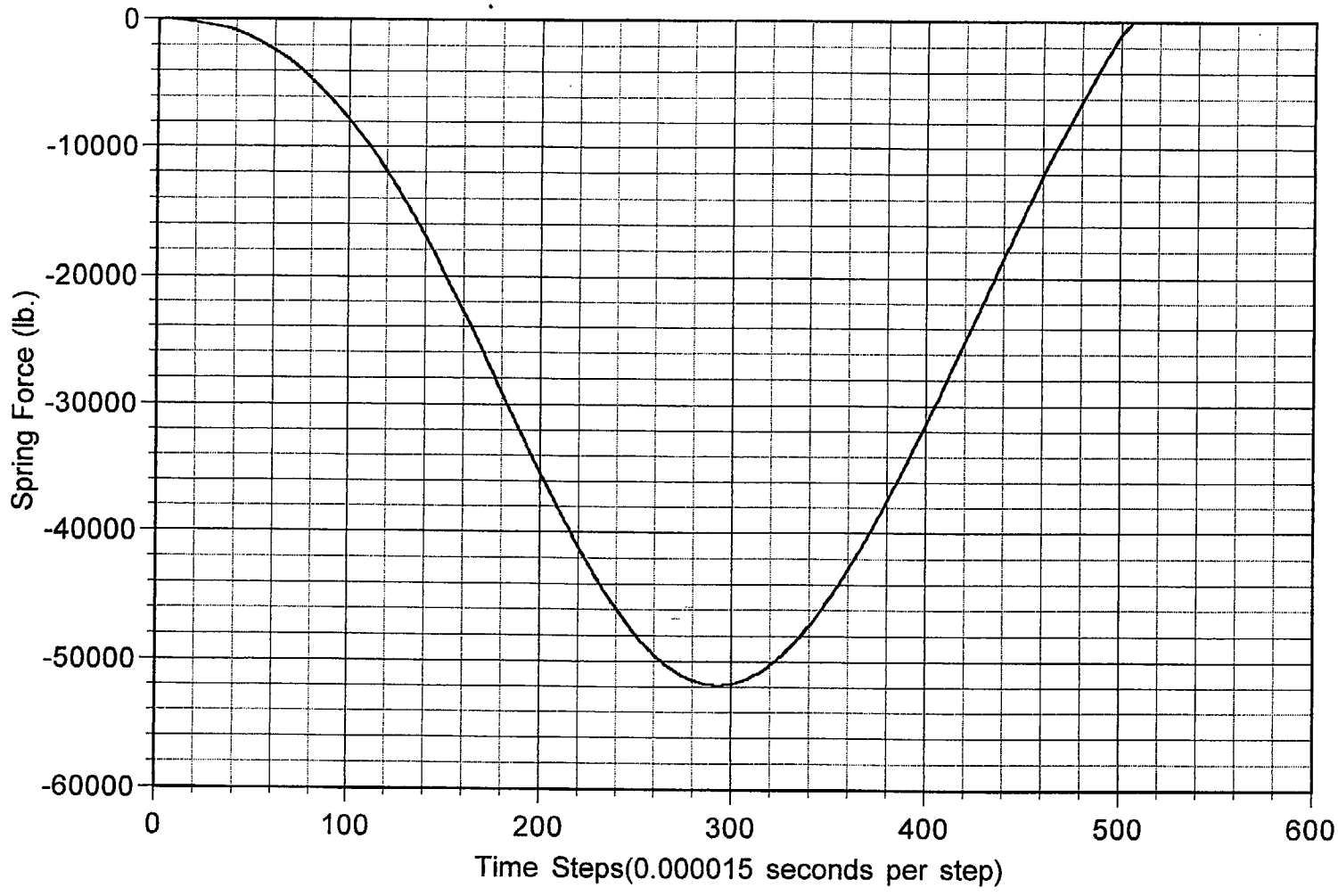

FIGURE 3.X.6 Dynamic Force in Lower Panel Spring vs. Time - BWR Basket, 60g Peak Value of Deceleration, Triangular Pulse, Duration 0.0045 Seconds

Appendix 3.Y - Cask Under Three Times Dead-load

3.Y.1 Purpose

Regulatory Guide 3.61 requires that the maximum primary stress near the trunnion/cask interface must be limited to the yield stress when three times the lifted load is applied. In other words, there must be a safety factor of three on yield when subject to the lifted load. Safety factor is defined in this section as the allowable strength divided by the calculated stress.

This requirement is applied to portions of the cask body in this analysis. The critical areas of concern during a lift are the top flange near the lifting trunnions and the MPC and Overpack baseplates.

It is shown that the stresses in the cask body are less than the acceptance limit when the structure is subjected to three times dead load.

3.Y.2 Top-Flange Analysis

In order for the trunnion stress to fully develop, the top flange must be able to accommodate stresses during a lift. This section determines the primary membrane and bending stresses in the HI-STAR 100 top flange when the trunnions are subject to a load equal to three times the cask weight.

3.Y.2.1 Assumptions

The assumptions in the finite element analysis are as follows:

1. The analysis does not take any credit for the thread engagement between the trunnion and the top flange. The interface between the top flange and the trunnion is assumed smooth and frictionless.

2. The weight of the cask is conservatively applied to a single point at the axis of the trunnion as show in the finite element plot in Figure 3.Y.1.
3. The finite element model that represents the cask is truncated approximately 36 inches below the top of the cask and all points there are fixed against translational movement along the axis of the cask.
4. The analysis model conservatively does not include the cask lid and the lid connections since there is a lifting operation when the lid is absent.

3.Y.2.2 Methodology

A one-quarter symmetry finite element model of the top section of the HI-STAR, without the lid, has been constructed using ANSYS[Ref. 1] 3-D isoparametric elements, SOLID45. The interface between the top flange and the trunnion is modeled with 3-D, compression only, interface elements, CONTACT49, with interface contact stiffness set at the large value of 1.0E+09 pounds-per-inch. A concentrated force F, equal to 25% of the amplified load, is vertically applied to the trunnion at the node located on the outer edge of its axis as shown in Figure 3.Y.1.

$$F = 3W/4 = 187{,}500 \text{ pounds} \quad (\tfrac{1}{4} \text{ symmetry})$$

where, W, the total weight of HI-STAR equals 250,000 pounds. The truncated end of the finite element model is fixed against vertical translation. The details of the finite element model are shown in Figure 3.Y.1.

The contact region between the trunnion and flange is expected to experience localized plasticity. Thus, a non-linear material property is defined for the top flange. The yield stress, at 400 °F, and the tangent modulus that defines the bilinear elastic-plastic material property are respectively taken as 32.20 ksi and 264.0 ksi. The plot of the bilinear stress-strain curve is shown in Figure 3.Y.2. The Young's modulus and the Poisson's ratio are respectively taken as 2.76E+04 ksi and 0.3

3.Y.2.3 Input Data

The top flange is constructed from steel material, Type SA350-LF3. The temperature dependent material properties of SA350-LF3 are listed in Table 3.3.4 of this FSAR. The material yield strength is taken as 32.2 ksi at the design temperature of 400 °F.

Cask dimensions are taken from applicable drawings in this submittal.

3.Y.2.4 Acceptance Criteria

Lifting attachments on casks are traditionally analyzed in accordance with NUREG-0612 and ANSI 14.6. These documents require a factor of safety during lifts based on six times yield for non-redundant lifts and based on three times yield for redundant lifts. Regulatory Guide 3.61 requires regions adjacent to the trunnion to have stresses below yield when lifted at 3 times deadweight.

In this case, the appropriate criterion for a pressure vessel is that the maximum membrane stress across any section must be below yield and that membrane plus bending stresses do not exceed 1.5 times yield when the applied loading is set at three times the lifted load. This is consistent with the design philosophy of the ASME code.

3.Y.2.5 Analysis

The stress intensity classifications (i.e., *membrane*, and *membrane* plus *bending*) at five critical locations in the top flange are presented in Figures 3.Y.4(a) through 3.Y.4(e). The location and path of each of the five sections in the top flange is identified by a set of nodes shown on the top right side of the stress classification plots [Figures 3.Y.4(a) through 3.Y.4(e)]. The two nodes in each of these figures define the beginning and the end of the path for which the maximum stress is classified. Furthermore, Figure 3.Y.3 displays

the physical locations of these nodal points. The maximum *membrane* stress of 27.44 ksi and the maximum membrane plus bending stress of 30 ksi are respectively reported in Figure 3.Y.4(e).

3.Y.2.6 Results

The safety factors in the top flange, based on the results of the finite element analysis calculated using three times the cask weight as the applied trunnion load, are as follows:

Stress Class	Maximum(ksi)	Allowable(ksi)	S.F.
Membrane	27.44	32.2	1.17 [Figure 3.Y.4(e)]
Mem. + Bending	30.00	48.3	1.61 [Figure 3.Y.4(e)]

It is seen from the above table that the safety factors are greater than 1.0 when subjected to a vertical lift through the lifting trunnions, at three times the weight of the cask.

3.Y.2.7 Top-Flange Conclusion

It is concluded that the top flange can accommodate the stress from a lift at three times the cask weight and therefore the intent of Regulatory Guide 3.61 with regard to stress limits in the cask is satisfied.

3.Y.2.8 References

[1] ANSYS 5.3, ANSYS Inc. 1996

3.Y.3 Baseplate Analysis

In this section, the MPC baseplate and the HI-STAR overpack baseplate are considered as simply supported plates subject to bending action under lateral loads equivalent to three times the actual loads when these components are subject to a vertical lift. The object of the calculation is to demonstrate that the intent of 10CFR71, Section 45 with regards to safety factors (or safety margins) is met during a lifting operation

3.Y.3.1 Input Data

Bounding weights are used in this calculation per Table 3.2.4.

Weight of Cask = 250,000 lbs.
Weight of MPC = 90,000 lbs.
Weight of Fuel = 54,000 lbs.
Weight of Fuel Basket = 13,000 lbs.
Weight of MPC baseplate = 3000 lbs.
Weight of Overpack baseplate = 10,000 lbs.

The geometry of the configuration is taken from applicable drawing submitted with this document.

Thickness of MPC baseplate = 2.5 inches
Thickness of Overpack baseplate = 6.0 inches
Diameter of MPC = 68.375 in
Diameter of Overpack = 83.25 in
Weld thickness of MPC = treat as ½ fillet weld
Weld thickness on Overpack = treat as four fillet welds with thickness of tan (30)(1-1/4")= 0.72 in and a length of 1-1/4" in each.

Allowable strengths at design temperatures are used.

Yield stress of Overpack = 32,200 psi (SA350-LF3 at 400 F)
Yield stress of MPC= 20,700 psi (Alloy X at 400 F)
Ultimate stress of weld material (E70xx) = 59,400 psi (400 F)
(weld strength is assumed to decrease with temperature the same as base metal, thus ultimate strength= 70- (300 F)[75 ksi -64.4 ksi /300 F] = 59,400 ksi)

3.Y.3.2 Acceptance Criteria

Consistent with the discussion in 3.Y.2.4, the stresses must be less than yield in the baseplate. Additionally, weld stress is limited to 30% of ultimate based on the weld stress limits set in ASME Section III, Subsection NF, the only section of the Code, which specifically addresses limits for welds of different configurations.

3.Y.3.3 Method

The MPC baseplate is modeled as simply supported circular plate subject to a uniform pressure load. The Overpack baseplate is modeled as a simply supported circular plate subject to a ring load.

3.Y.3.4 Assumptions

1. The baseplates are simply supported (conservative).

3.Y.3.5 References

1. Young, Roark's Formulas of Stress and Strain, 6th edition.

3.Y.3.6 Calculation

A. MPC Evaluation

The MPC baseplate is modeled as a simply supported plate with a uniform pressure load. The maximum stress is given in reference 1 (Table 24, case 10a),

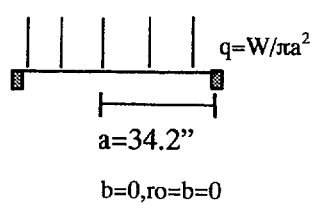

$$\sigma = \frac{0.375}{\pi}\frac{W(3+\nu)}{t^2}$$

$$\boxed{\sigma = \frac{1.24}{\pi}\frac{W}{t^2}}$$

Thus, the stress in the MPC baseplate is,

$$\sigma = \frac{1.24}{\pi}\frac{(3\times(54{,}000lbs + 13{,}000lbs + 3{,}000lbs))}{(2.5in)^2} = 13{,}262psi < S_y \text{ O.K.}$$

Therefore, the MPC baseplate meets the acceptance criteria with a margin of safety of:

$$M\,\text{arg}in = \frac{20{,}700psi}{13{,}262psi} - 1 = 0.56$$

The margin of safety on the weld is,

$$\tau = \frac{3W}{A_{weld}} = \frac{3(54{,}000 + 3{,}000lbs + 13000lbs)}{2\pi(0.707in)(34.2in)(0.5in)} = 2{,}765psi$$

$$\text{Margin} = \frac{17{,}820\text{psi}}{2{,}765\text{psi}} - 1 = 5.4$$

B. Overpack

The overpack is modeled as a simply supported circular plate with a ring load. The ring load has the radius of the MPC. Using Reference 1(table 24, case 9a), the stress is:

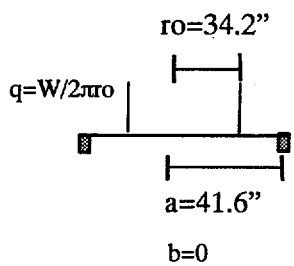

$$\sigma = L9\frac{6qa}{t^2}$$

$$L9 = \frac{ro}{a}\left\{\frac{1+\nu}{2}\ln\frac{a}{ro} + \frac{1-\nu}{4}\left[1-\left(\frac{ro}{a}\right)^2\right]\right\}$$

$$L9 = \frac{34.2}{41.6}\left\{\frac{1+\nu}{2}\ln\frac{41.6}{34.2} + \frac{1-\nu}{4}\left[1-\left(\frac{34.2}{41.6}\right)^2\right]\right\} = 0.15$$

$$\sigma = \frac{0.45}{\pi}\frac{a}{ro}\frac{W}{t^2}$$

$$\boxed{\therefore \sigma = \frac{0.45}{\pi}\frac{a}{ro}\frac{W}{t^2}}$$

$$\sigma = \frac{0.45}{\pi}\frac{(41.6")}{(34.2")}\frac{(3\times(90{,}000+10{,}000lbs)}{(6in)^2} = 1452psi << S_y \text{ O.K.}$$

Therefore the overpack has a margin of safety for bending of,

$$M\arg in = \frac{32{,}200psi}{1452psi} - 1 = 21.2$$

3.Y.3.7 Baseplate Conclusion

The MPC and Overpack baseplates meet the yield criteria when subjected to three times dead load.

3.Y.4 Overall Conclusion

The cask body meets appropriate acceptance criteria when subjected to a lift of three times dead load.

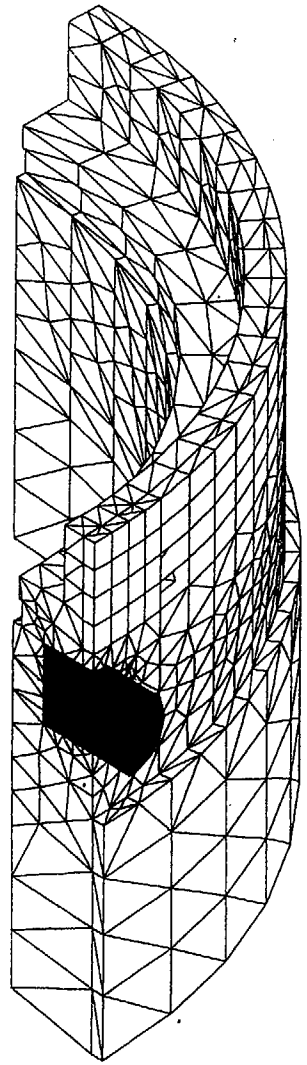

ANSYS 5.3
SEP 22 1997
11:06:54
PLOT NO. 1
ELEMENTS
TYPE NUM

FIGURE 3.Y.1 FINITE ELEMENT PLOT

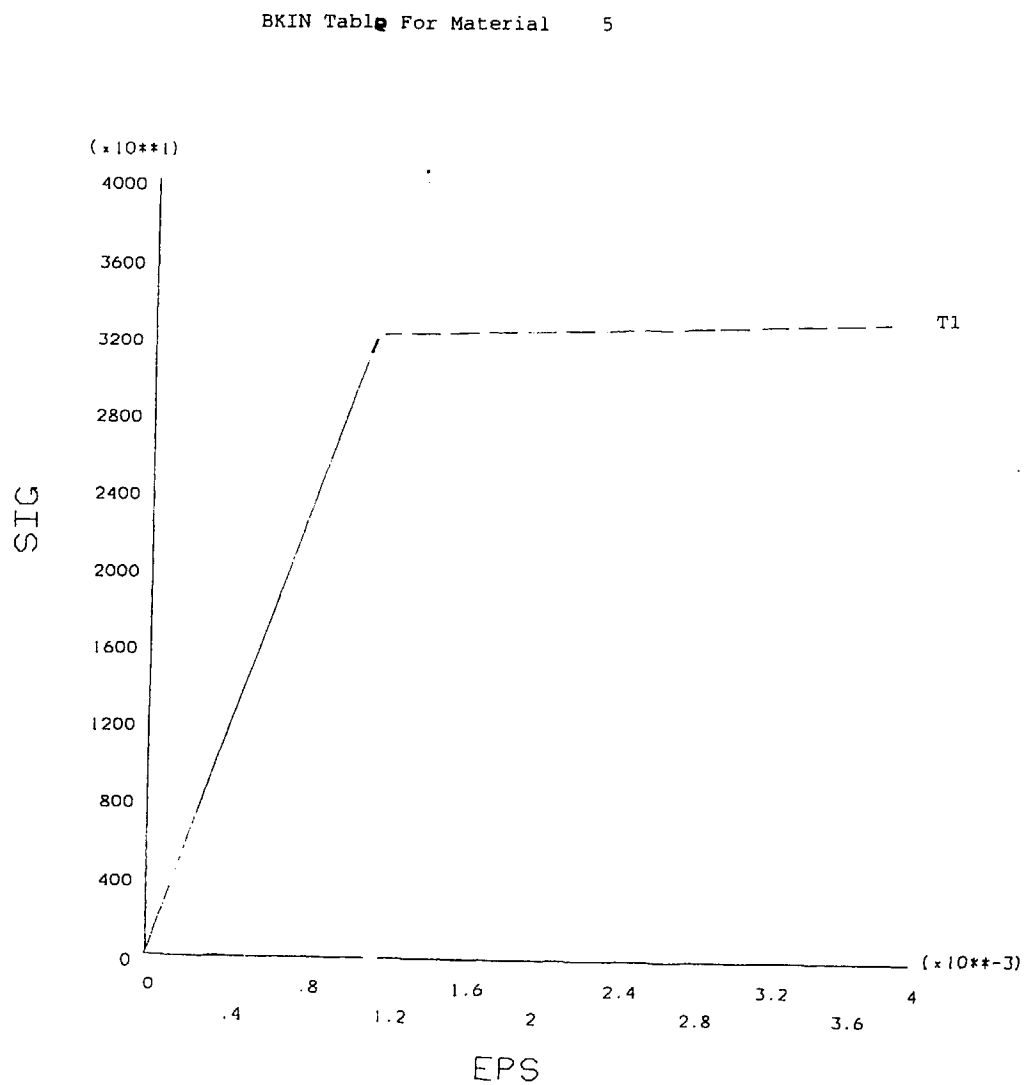

FIGURE 3.Y.2 MATERIAL STRESS-STRAIN CURVE.

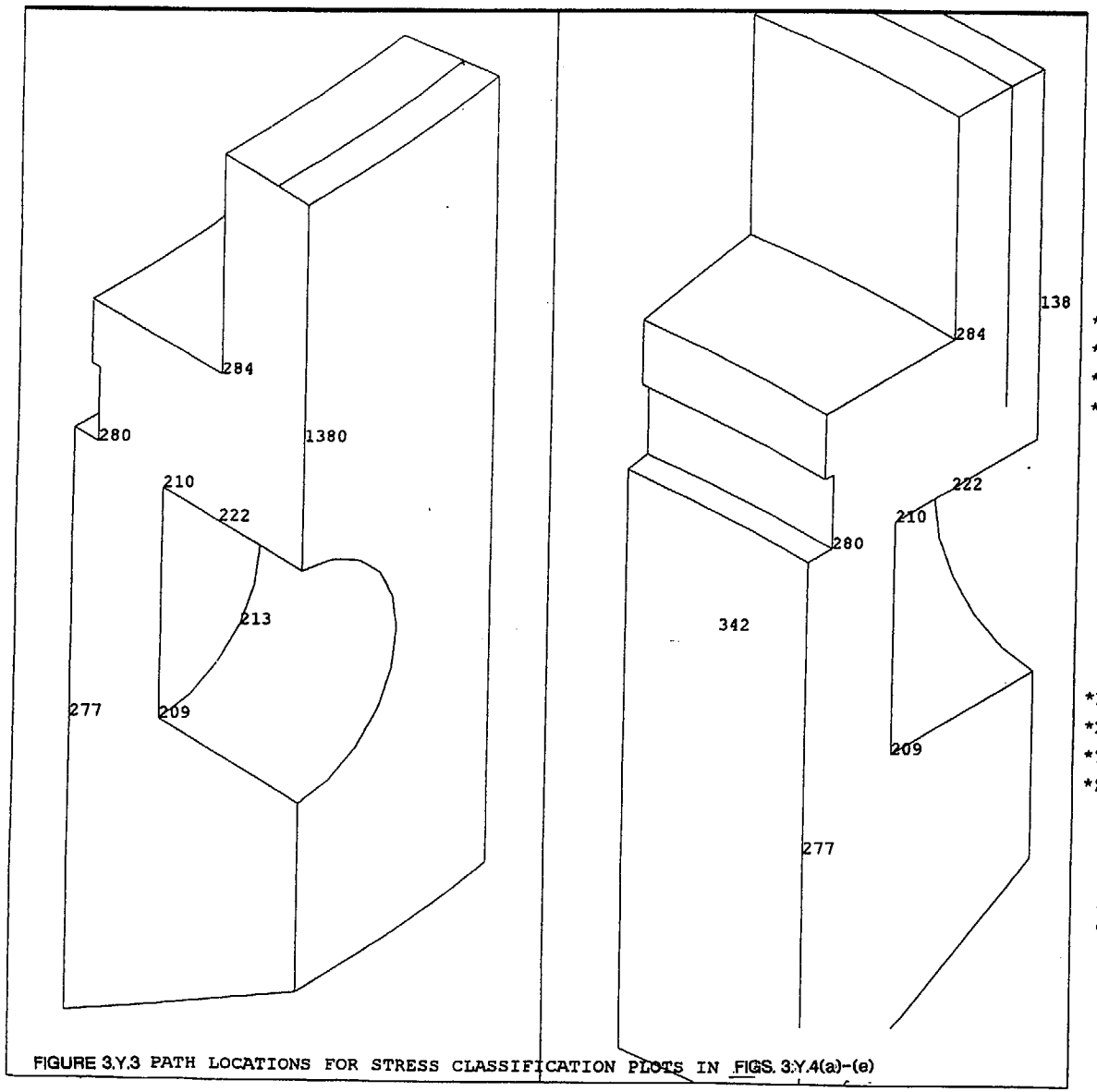

ANSYS 5.3
SEP 30 1997
11:52:23
PLOT NO. 5
ELEMENTS
TYPE NUM

XV =1
YV =1
ZV =1
*DIST=11.885
*XF =37.788
*YF =190.407
*ZF =-3.256
CENTROID HIDDEN
EDGE

NODES
NODE NUM

XV =1
YV =1
ZV =1
*DIST=11.885
*XF =37.788
*YF =190.407
*ZF =-3.256
CENTROID HIDDEN
EDGE

ELEMENTS
TYPE NUM

FIGURE 3.Y.3 PATH LOCATIONS FOR STRESS CLASSIFICATION PLOTS IN FIGS. 3.Y.4(a)-(e)

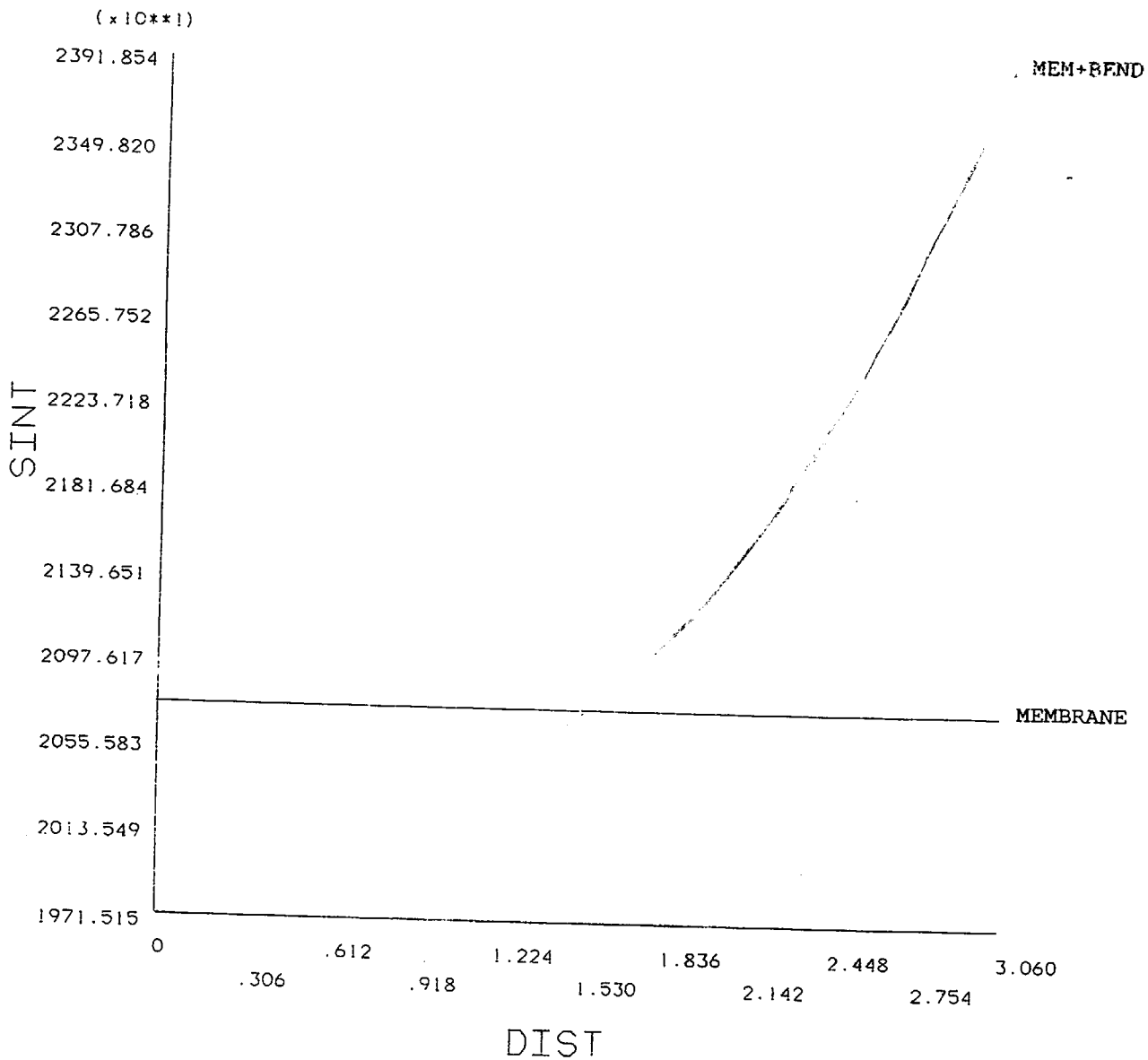

ANSYS 5.3
SEP 22 1997
10:15:22
PLOT NO. 3
POST1
STEP=1
SUB =10
TIME=1
SECTION PLOT
NOD1=277
NOD2=209
SINT

FIGURE 3.Y.4(a) STRESS CLASSIFICATIONS AT CRITICAL SECTIONS. (psi)

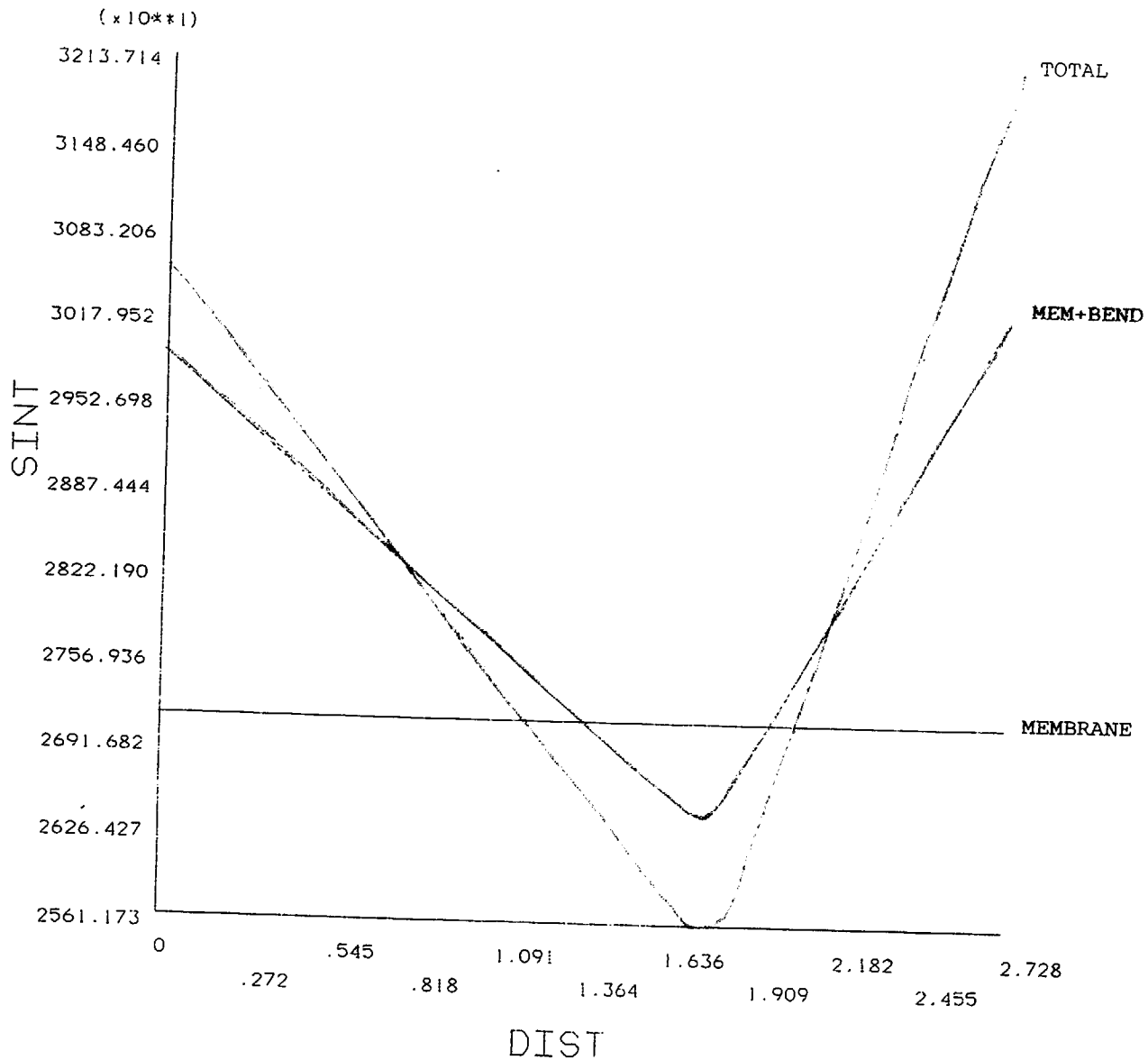

ANSYS 5.3
SEP 30 1997
10:44:25
PLOT NO. 5
POST1
STEP=1
SUB =10
TIME=1
SECTION PLOT
NOD1=284
NOD2=1380
SINT

ZV =1.732
*DIST=.75
*XF =.5
*YF =.5
*ZF =.5
CENTROID HIDDEN

FIGURE 3Y.4(b) STRESS CLASSIFICATIONS AT CRITICAL SECTIONS. (psi)

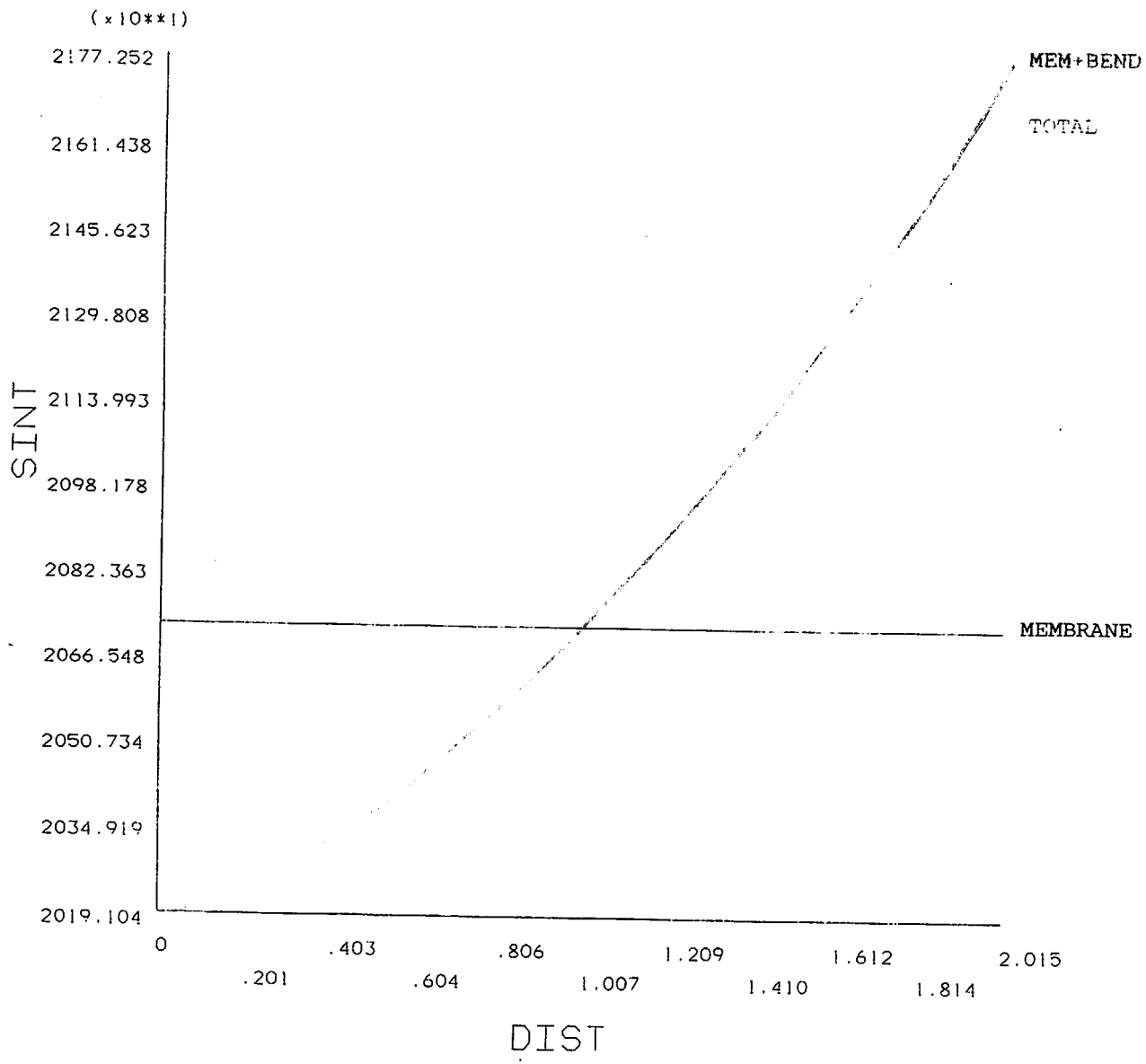

ANSYS 5.3
SEP 22 1997
10:15:24
PLOT NO. 5
POST1
STEP=1
SUB =10
TIME=1
SECTION PLOT
NOD1=280
NOD2=210
SINT

FIGURE 3.Y.4(c) STRESS CLASSIFICATIONS AT CRITICAL SECTIONS. (psi)

ANSYS 5.3
SEP 22 1997
10:15:25
PLOT NO. 6
POST1
STEP=1
SUB =10
TIME=1
SECTION PLOT
NOD1=284
NOD2=222
SINT

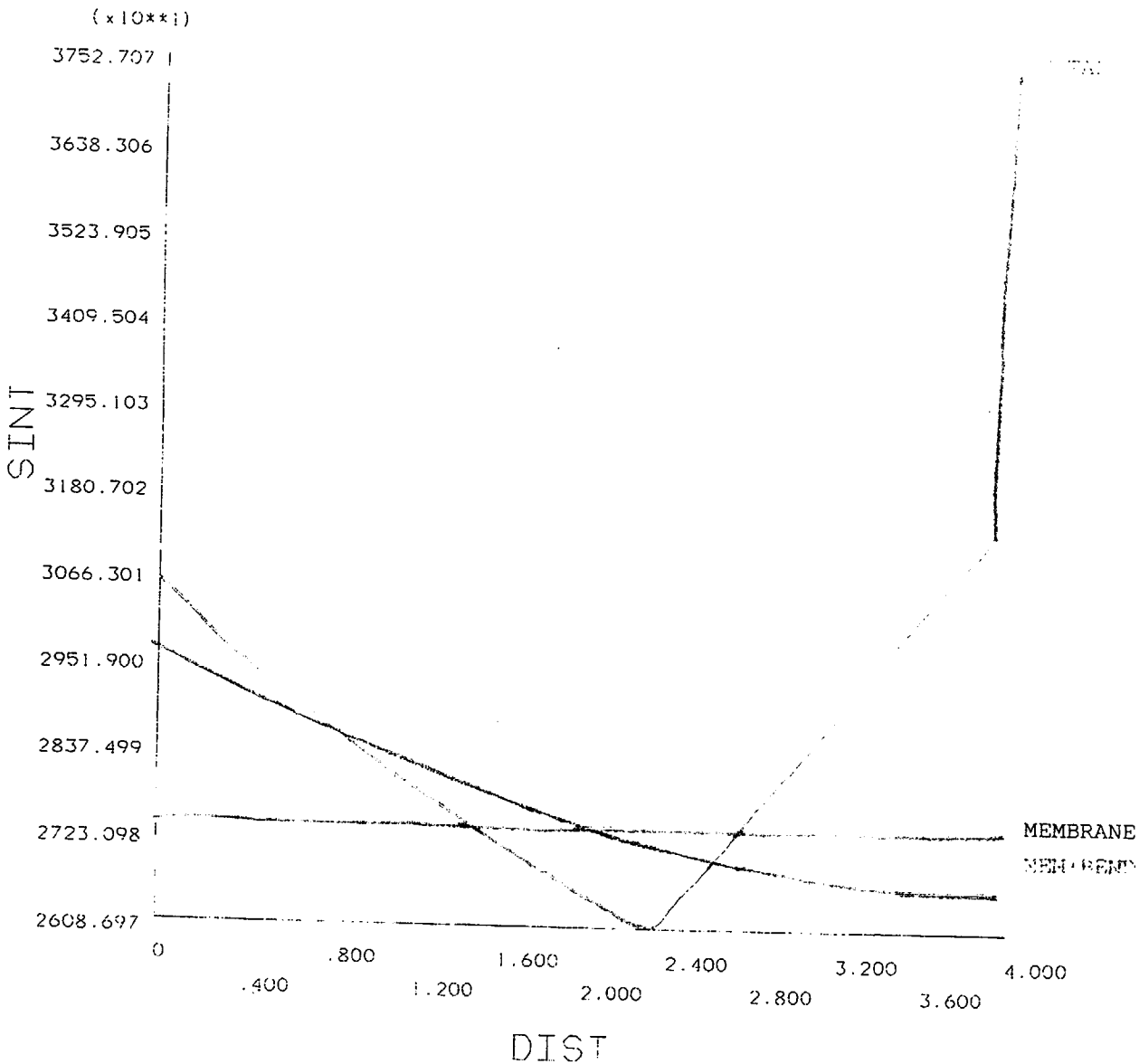

FIGURE 3.Y.4(d) STRESS CLASSIFICATIONS AT CRITICAL SECTIONS. (psi)

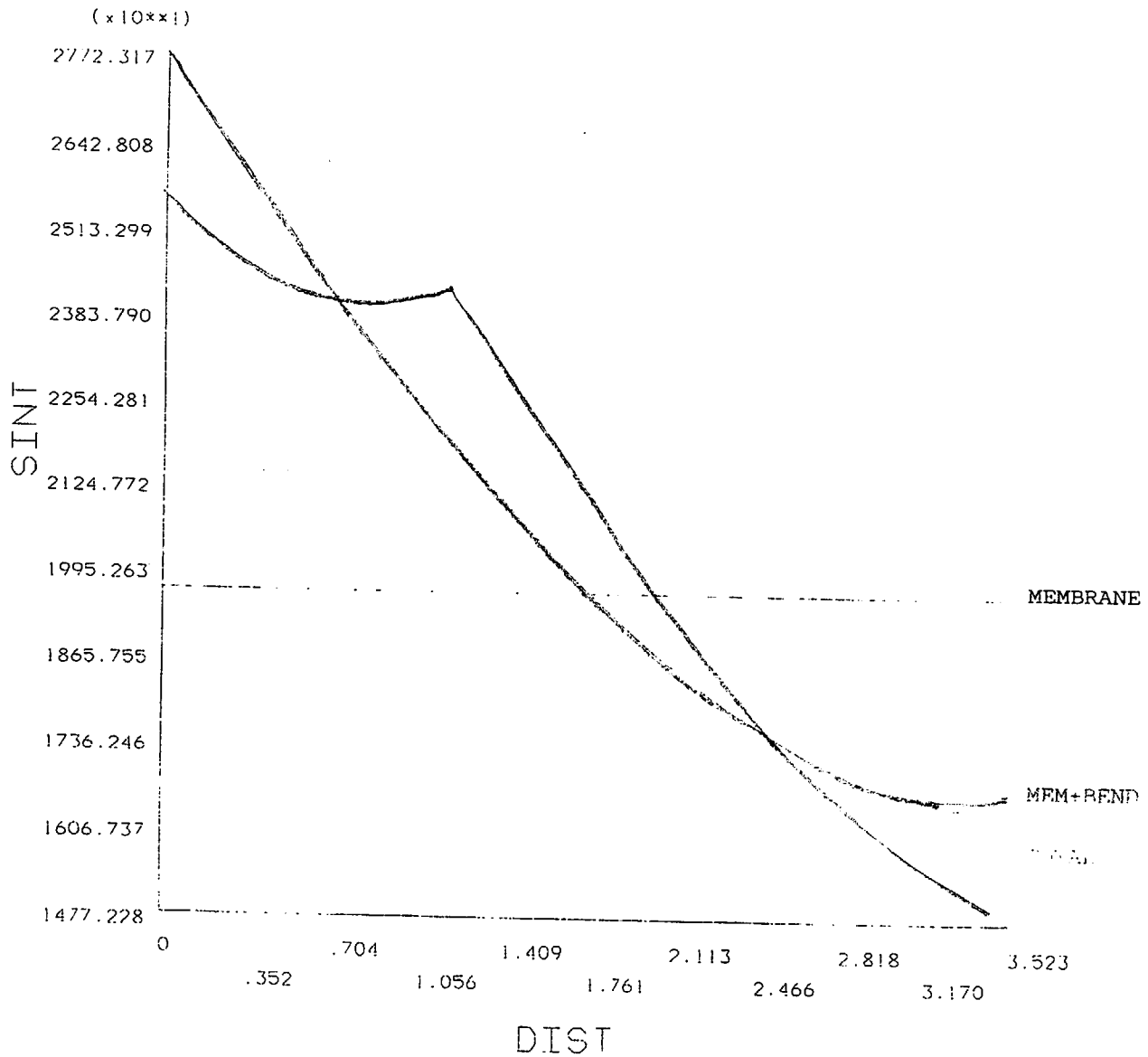

ANSYS 5.3
SEP 22 1997
10:15:26
PLOT NO. 7
POST1
STEP=1
SUB =10
TIME=1
SECTION PLOT
NOD1=213
NOD2=342
SINT

FIGURE 3.Y.4(e) STRESS CLASSIFICATIONS AT CRITICAL SECTIONS. (psi)

APPENDIX 3.Z - TOP FLANGE BOLT HOLE ANALYSIS

3.Z.1 Introduction

This appendix contains an analysis of the threaded holes for the closure bolts in the top flange of the HI-STAR 100 Overpack. The objective of the analysis is to demonstrate that the design of the threaded region is conservative and that the limiting region for structural integrity evaluation is the bolt shaft in tension rather than the threaded region in shear.

The following steps are performed in this analysis:

1. It is shown that the depth of engagement of the closure bolts in the top flange is adequate.

2. It is demonstrated that the limiting section for evaluating the design is the bolt shaft, as opposed to thread shear in either the bolt or in the flange.

3. A lower bound on the preload required to ensure that the hypothetical accident load can be supported without closure plate/top flange separation is determined.

3.Z.2 Composition

This appendix was created using the Mathcad (version 6.0+) software package. Mathcad uses the symbol ':=' as an assignment operator, and the equals symbol '=' retrieves values for constants or variables.

3.Z.3 References

[3.Z.1] E. Oberg and F.D. Jones, *Machinery's Handbook*, Fifteenth Edition, Industrial Press, 1957.

[3.Z.2] FED-STD-H28/2A, *Federal Standard Screw-Thread Standards for Federal Services*, United States Government Printing Office, April, 1984.

[3.Z.3] K.P. Singh and A.I. Soler, *Mechanical Design of Heat Exchangers and Pressure Vessel Components*, First Edition, Arcturus Publishers, Inc., 1984.

[3.Z.4] Letter from Mr. Joe Kedves of American Seal & Engineering Co., Inc. to Mr. Steve Agace of Holtec International, dated September 6, 1996.

[3.Z.5] FEL-PRO Technical Bulletin, N-5000 Nickel Based - Nuclear Grade Anti-Seize Lubricant, 8/97.

3.Z.4 Assumptions

1. Thermal effects are neglected in this analysis, but material properties are taken at design temperatures.

2. In determining the minimum preload required for the closure bolts, the overpack closure plate is assumed to be rigid.

3. In determining the most stress limiting area, the capacity of each section is based on ASME Code Section III, Subsection NB stress limits.

4. The design temperature for the closure bolts is set as 350°F.

3.Z.5 Input Data

Figure 3.Z.1 shows the HI-STAR 100 Overpack closure plate/top flange interface schematically. A free-body diagram of the system used to determine the minimum preload is given in Figure 3.Z.2. The following is a list of the basic input parameters required to perform the calculations. All dimensions are obtained from the Design Drawings in Section 1.5.

The number of closure plate bolts (including two short bolts over the lifting trunnions),

$$NB := 54$$

The nominal radius of the closure bolt shaft, $a := 0.8125 \cdot in$

The major diameter of the bolt, $d_b := 2 \cdot a$

The cross-sectional area of the bolt unthreaded section, $A_d := \pi \cdot \frac{d_b^2}{4}$

The thread engagement length of the closure plate short bolts, $L_{eng} := 2.75 \cdot in$

The diameter of the sealing gasket compression load, $D_{seal} := 71.565 \cdot in$

The gasket seating load (from Reference 3.Z.4), $f_{seal} := 3600 \cdot \frac{lbf}{in}$

The internal pressure of the overpack, $P_{int} := 100 \cdot psi$

For conservatism the internal pressure of the overpack is set equal to the design internal pressure of the MPC under normal conditions (see Table 2.2.1). This accounts for the unlikely failure of the MPC pressure boundary.

The upper bound MPC weight (from Table 3.2.4), $W_{mpc} := 90000 \cdot lbf$

The upper bound closure plate weight (from Table 3.2.4), $W_{lid} := 8000 \cdot lbf$

The design maximum drop acceleration (from Table 3.1.2), $GLoad_{des} := 60$

The root area of the bolt is the area derived from the minor diameter of the bolt. The following values are obtained from page 100 of Reference 3.Z.3 and page 987 of Reference 3.Z.1.

The root area of the bolt, $A_{root} := 1.680 \cdot in^2$

The pitch diameter of the bolt, $d_{pitch} := 1.542 \cdot in$

The minor diameter of the bolt, $dm_{ext} := 1.472 \cdot in$

The minor diameter of the threaded hole, $dm_{int} := 1.490 \cdot in$

The number of threads per inch, $N := 8 \cdot in^{-1}$

From the tables in Section 3.3, the yield and ultimate strengths of the closure plate/top flange material (at the design temperature of 400 °F) and the bolt material (at the bolt design temperature of 350 °F) are:

The forging material ultimate strength, $Su_{forg} := 64600 \cdot psi$

The forging material yield strength, $Sy_{forg} := 32200 \cdot psi$

The forging material design stress intensity, $Sm_{forg} := 21500 \cdot psi$

The bolt material ultimate strength, $Su_{bolt} := 172050 \cdot psi$

The bolt material yield strength, $Sy_{bolt} := 139500 \cdot psi$

The bolt material design stress intensity, $Sm_{bolt} := 46500 \cdot psi$

3.Z.6 Length of Engagement/Strength Calculations

In this section, it is shown that the length of thread engagement is adequate, and that tensile stress in the bolt governs the analysis. The method and terminology of Reference 3.Z.2 are adhered to.

The thread pitch, $p := \frac{1}{N}$

On page 987 of Reference 3.Z.1, the height of a sharp V-thread (H) is defined as:

$$H := 0.86603 \cdot p$$

$$H = 0.108\,in$$

The thread depth of an internal thread (i.e. the forging top flange bolt hole) is determined as:

$$D_{int} := \frac{5}{8} \cdot H \qquad D_{int} = 0.068\,in$$

and the thread depth of an external thread (i.e. the bolt) is determined as:

$$D_{ext} := \frac{17}{24} \cdot H$$

$$D_{ext} = 0.077\,in$$

The major diameter of the bolt can be determined from the minor diameter and the thread depth of an external thread as:

$$dmaj_{ext} := dm_{ext} + 2 \cdot D_{ext}$$

$$dmaj_{ext} = 1.625\,in$$

As defined on page 103 of Reference 3.Z.2, the bolt thread shear area is determined as:

$$A_{bolt} := \pi \cdot N \cdot L_{eng} \cdot dm_{int} \cdot \left[\frac{1}{2 \cdot N} + .57735 \cdot \left(d_{pitch} - dm_{int}\right) \right]$$

$$A_{bolt} = 9.528\,in^2$$

and the forging thread shear area is determined as:

$$A_{frg} := \pi \cdot N \cdot L_{eng} \cdot dmaj_{ext} \cdot \left[\frac{1}{2 \cdot N} + 0.57735 \cdot \left(dmaj_{ext} - d_{pitch}\right) \right]$$

$$A_{frg} = 12.428\,in^2$$

The load capacities of the bolt, bolt thread and the top flange thread, based on the appropriate Subsection NB stress limits under normal conditions, are:

$$LC_{bolt} := 2 \cdot Sm_{bolt} \cdot A_{root}$$

$$LC_{bolt} = 156240\,lbf$$

$$LC_{thrd} := 0.6 \cdot Sm_{bolt} \cdot A_{bolt}$$

$$LC_{thrd} = 265833\,lbf$$

$$LC_{forg} := 0.6 \cdot Sm_{forg} \cdot A_{frg}$$

$$LC_{forg} = 160316\,lbf$$

If the load capacity of the forging thread is greater than the load capacity of the bolt, then the bolt tension will govern. If the margin of safety calculated below is greater than 0.0, then the bolt tension will govern in this analysis.

$$MS := \frac{LC_{forg}}{LC_{bolt}} - 1$$

$$MS = 0.03$$

These calculations confirm that all strength checks can be based on the bolt tensile capacity, and that the depth of engagement is adequate to support the loads.

3.Z.7 Determination of Minimum Preload

In this section, a lower bound estimate of preload requirements for the overpack closure bolts is obtained. The load on the closure plate due to design internal pressure is determined as:

$$L_{press} := \pi \cdot \frac{D_{seal}^2}{4} \cdot P_{int}$$

$$L_{press} = 402246\,lbf$$

The required gasket seating load (f_{seal}), in pounds per unit circumferential length, is specified by the gasket manufacturer as:

$$f_{seal} = 3600 \frac{lbf}{in}$$

and the total gasket load can therefore be determined as:

$$L_{gask} := f_{seal} \cdot \pi \cdot D_{seal}$$

$$L_{gask} = 809381\,lbf$$

The force applied to the closure plate by quasi-static impact loads is therefore determined as:

$$G_{load} := GLoad_{des} \cdot (W_{mpc} + W_{lid})$$

$$G_{load} = 5880000\,lbf$$

The total preload force required to overcome these combined loads is determined as:

$$Preload := L_{press} + L_{gask} + G_{load}$$

$$Preload = 7091627\,lbf$$

and the preload per bolt is therefore:

$$Bolt_{pl} := \frac{Preload}{NB} \qquad Bolt_{pl} = 131326\,lbf$$

The nominal nut factor is 0.15 [3.Z.5] with an allowable tolerance of +/- 5%. The maximum torque corresponds to a nut factor of 0.1575, and the value is:

$$T_{pl} := 0.1575 \cdot Bolt_{pl} \cdot dmaj_{ext} \qquad T_{pl} = 2801.6\,lbf \cdot ft$$

Therefore, the minimum bolt torque, which equals the nominal value minus an acceptable tolerance, must exceed the value of T_{pl} which is calculated above. For the HI-STAR 100 System, where the final torque for the closure bolts is specified as 2,895+/- 90 ft-lb in Table 8.1.2, the minimum bolt torque is 2,805 ft-lb.

The bolt preload force becomes a maximum when the maximum bolt torque is combined with the minimum nut factor. This combination leads to the maximum preload stress in the bolt. For a minimum nut factor of 0.1425, which is five percent less than the torque coefficient in Appendix 1.C, the preload force is calculated as:

$$T_{max} := 2895 \cdot ft \cdot lbf + 90 \cdot ft \cdot lbf$$

$$Bolt_{pl} := \frac{T_{max}}{0.1425 \cdot dmaj_{ext}} \qquad Bolt_{pl} = 154654\,lbf$$

and the corresponding preload stress is determined as:

$$\sigma := \frac{Bolt_{pl}}{A_{root}} \qquad \sigma = 92056\,psi$$

The average stress in the closure bolts, according to Subsection NB, must not exceed twice the design stress intensity. Thus, the ratio of the allowable stress to the closure bolt stress must be greater than 1.0. This ratio, under the loadings examined in this appendix, is determined as:

$$\frac{2 \cdot Sm_{bolt}}{\sigma} = 1.01$$

which is greater than 1.0.

3.Z.8 Conclusion

The analyses presented in this appendix demonstrate that the length of thread engagement is sufficient and conservative, and that the load capacity of the bolts is less than the load capacity of the threaded region in the top flange. In addition, the minimum bolt preload (and corresponding bolt torque) required to secure the closure plate to the top flange under a conservative impact load has been computed.

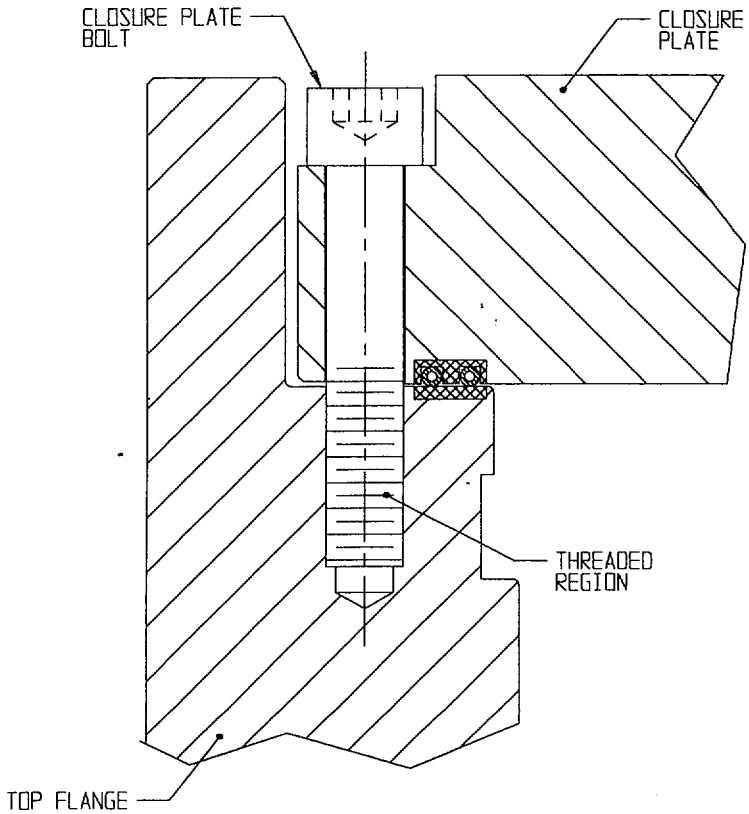

FIGURE 3.Z.1; SCHEMATIC OF CLOSURE PLATE/TOP FLANGE INTERFACE

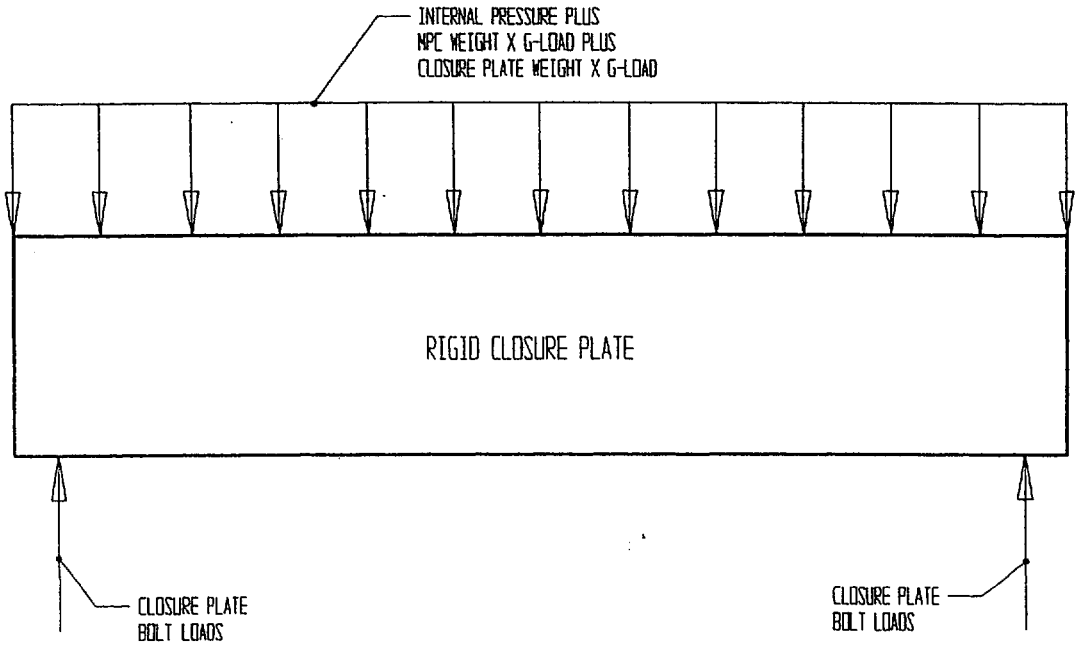

FIGURE 3.Z.2; FREE BODY DIAGRAM FOR THE DETERMINATION OF MINIMUM CLOSURE PLATE BOLT PRELOAD

Appendix 3.AA - ANSYS Finite Element Results for the MPCs

Three hundred eighty-seven (387) pages total including cover page

The notation used in Appendix 3.AA, for the column headings, is as follows:

ELEM:	Element number
REF TEMP:	Temperature (EF)
PM:	Direct stress/primary membrane stress intensity (psi)
PL+PB:	Local membrane plus primary bending stress intensity (psi)
Q:	Secondary stress intensity
ALLOW:	Allowable stress intensity (psi)
SF:	Safety factor

LIST OF TABLES

MPC-24

Table 3.AA.1	MPC-24 Thermal Load - Secondary Stress Intensity
Table 3.AA.2	MPC-24 Handling Load - Fuel Basket - Primary Membrane Stress Intensity
Table 3.AA.3	MPC-24 Handling Load - Fuel Basket - Local Membrane Plus Primary Bending Stress Intensity
Table 3.AA.4	MPC-24 Handling Load - Enclosure Vessel - Primary Membrane Stress Intensity
Table 3.AA.5	MPC-24 Handling Load - Enclosure Vessel - Local Membrane Plus Primary Bending Stress Intensity
Table 3.AA.6	MPC-24 Handling Load - Basket Supports - Primary Membrane Stress Intensity
Table 3.AA.7	MPC-24 Handling Load - Basket Supports - Local Membrane Plus Primary Bending Stress Intensity
Table 3.AA.8	MPC-24 0 Degree Side Drop - Fuel Basket - Primary Membrane Stress Intensity
Table 3.AA.9	MPC-24 0 Degree Side Drop - Fuel Basket - Local Membrane Plus Primary Bending Stress Intensity
Table 3.AA.10	MPC-24 0 Degree Side Drop - Enclosure Vessel - Primary Membrane Stress Intensity
Table 3.AA.11	MPC-24 0 Degree Side Drop - Enclosure Vessel - Local Membrane Plus Primary Bending Stress Intensity
Table 3.AA.12	MPC-24 0 Degree Side Drop - Basket Supports - Primary Membrane Stress Intensity
Table 3.AA.13	MPC-24 0 Degree Side Drop - Basket Supports - Local Membrane Plus Primary Bending Stress Intensity
Table 3.AA.14	MPC-24 45 Degree Side Drop - Fuel Basket - Primary Membrane Stress Intensity
Table 3.AA.15	MPC-24 45 Degree Side Drop - Fuel Basket - Local Membrane Plus Primary Bending Stress Intensity
Table 3.AA.16	MPC-24 45 Degree Side Drop - Enclosure Vessel - Primary Membrane Stress Intensity
Table 3.AA.17	MPC-24 45 Degree Side Drop - Enclosure Vessel - Local Membrane Plus Primary Bending Stress Intensity
Table 3.AA.18	MPC-24 45 Degree Side Drop - Basket Supports - Primary Membrane Stress Intensity
Table 3.AA.19	MPC-24 45 Degree Side Drop - Basket Supports - Local Membrane Plus Primary Bending Stress Intensity

Table 3.AA.20	DELETED
Table 3.AA.21	DELETED
Table 3.AA.22	DELETED
Table 3.AA.23	DELETED
Table 3.AA.24	DELETED
Table 3.AA.25	DELETED
Table 3.AA.26	DELETED
Table 3.AA.27	DELETED
Table 3.AA.28	DELETED
Table 3.AA.29	DELETED
Table 3.AA.30	DELETED
Table 3.AA.31	DELETED
Table 3.AA.32	DELETED
Table 3.AA.33	DELETED
Table 3.AA.34	DELETED
Table 3.AA.35	DELETED
Table 3.AA.36	DELETED
Table 3.AA.37	DELETED
Table 3.AA.38	DELETED

Table 3.AA.39	MPC-68 Thermal Load - Secondary Stress Intensity
Table 3.AA.40	MPC-68 Handling Load - Fuel Basket - Primary Membrane Stress Intensity
Table 3.AA.41	MPC-68 Handling Load - Fuel Basket - Local Membrane Plus Primary Bending Stress Intensity
Table 3.AA.42	MPC-68 Handling Load - Enclosure Vessel - Primary Membrane Stress Intensity
Table 3.AA.43	MPC-68 Handling Load - Enclosure Vessel - Local Membrane Plus Primary Bending Stress Intensity
Table 3.AA.44	MPC-68 Handling Load - Basket Supports - Primary Membrane Stress Intensity
Table 3.AA.45	MPC-68 Handling Load - Basket Supports - Local Membrane Plus Primary Bending Stress Intensity
Table 3.AA.46	MPC-68 0 Degree Side Drop - Fuel Basket - Primary Membrane Stress Intensity
Table 3.AA.47	MPC-68 0 Degree Side Drop - Fuel Basket - Local Membrane Plus Primary Bending Stress Intensity
Table 3.AA.48	MPC-68 0 Degree Side Drop - Enclosure Vessel - Primary Membrane Stress Intensity
Table 3.AA.49	MPC-68 0 Degree Side Drop - Enclosure Vessel - Local Membrane Plus Primary Bending Stress Intensity
Table 3.AA.50	MPC-68 0 Degree Side Drop - Basket Supports - Primary Membrane Stress Intensity
Table 3.AA.51	MPC-68 0 Degree Side Drop - Basket Supports - Local Membrane Plus Primary Bending Stress Intensity
Table 3.AA.52	MPC-68 45 Degree Side Drop - Fuel Basket - Primary Membrane Stress Intensity
Table 3.AA.53	MPC-68 45 Degree Side Drop - Fuel Basket - Local Membrane Plus Primary Bending Stress Intensity
Table 3.AA.54	MPC-68 45 Degree Side Drop - Enclosure Vessel - Primary Membrane Stress Intensity
Table 3.AA.55	MPC-68 45 Degree Side Drop - Enclosure Vessel - Local Membrane Plus Primary Bending Stress Intensity
Table 3.AA.56	MPC-68 45 Degree Side Drop - Basket Supports - Primary Membrane Stress Intensity
Table 3.AA.57	MPC-68 45 Degree Side Drop - Basket Supports - Local Membrane Plus Primary Bending Stress Intensity

Table 3.AA.1

TITLE=
MPC-24 Structural Analysis

SUBTITLE 1 =
Component: Fuel Basket
SUBTITLE 2 =
Load Combination: F1 (See Table 3.1.3)
SUBTITLE 3 =
Stress Result: Secondary Stress (Q)

PRINT ELEMENT TABLE ITEMS PER ELEMENT

STAT ELEM	CURRENT REF TEMP	CURRENT Q
831	316.87	11402.
253	316.87	11402.
793	481.87	11373.
237	481.87	11373.
105	316.51	11271.
89	316.51	11271.
254	321.48	10951.
832	321.48	10951.
238	479.24	10901.
794	479.24	10901.
106	321.11	10824.
90	321.11	10824.
242	356.42	10526.
798	356.42	10526.
933	440.15	10356.
949	440.15	10356.
127	481.66	10272.
121	481.66	10272.
957	482.23	10193.
963	482.23	10193.
956	238.07	10012.
940	238.07	10012.
968	356.78	9989.4
962	356.78	9989.4
934	437.53	9985.8
950	437.53	9985.8
122	486.26	9862.2
128	486.26	9862.2
958	479.61	9755.9
964	479.61	9755.9
939	275.16	9641.8
955	275.16	9641.8
110	456.62	9417.0
94	456.62	9417.0
830	521.57	9380.3
264	521.57	9380.3
836	456.99	9367.4
258	456.99	9367.4
259	647.02	8911.4

Table 3.AA.1 (continued)

825	647.02	8911.4
501	461.01	8709.0
969	461.01	8709.0
132	621.77	8675.3
126	621.77	8675.3
1007	185.97	8668.7
517	185.97	8668.7
824	458.77	8521.4
236	458.77	8521.4
826	644.40	8515.9
260	644.40	8515.9
970	455.98	8368.1
502	455.98	8368.1
1008	188.17	8339.1
518	188.17	8339.1
817	274.80	8320.6
229	274.80	8320.6
823	439.95	8219.8
235	439.95	8219.8
800	279.78	8191.6
244	279.78	8191.6
96	500.48	8078.9
112	500.48	8078.9
818	279.40	8018.9
230	279.40	8018.9
17	185.97	7946.5
265	185.97	7946.5
266	188.17	7649.4
18	188.17	7649.4
243	316.87	7399.9
799	316.87	7399.9
111	481.66	7299.1
95	481.66	7299.1
974	247.04	7011.2
506	247.04	7011.2
833	360.66	6925.2
255	360.66	6925.2
534	204.16	6917.6
66	204.16	6917.6
567	186.15	6873.8
77	186.15	6873.8
91	360.29	6822.8
107	360.29	6822.8
954	314.71	6773.7
938	314.71	6773.7
795	453.84	6686.0
239	453.84	6686.0
935	412.13	6672.9
951	412.13	6672.9
6	414.05	6601.2
286	414.05	6601.2
1012	237.56	6598.6
522	237.56	6598.6

Table 3.AA.1 (continued)

529	241.09	6482.6
61	241.09	6482.6
1	185.97	6433.0
281	185.97	6433.0
797	392.43	6310.6
241	392.43	6310.6
718	479.20	6299.0
910	479.20	6299.0
777	283.73	6263.2
1025	283.73	6263.2
560	477.22	6237.0
60	477.22	6237.0
597	481.87	6223.7
185	481.87	6223.7
530	240.88	6194.3
62	240.88	6194.3
129	525.44	6193.5
123	525.44	6193.5
2	192.43	6172.5
282	192.43	6172.5
773	440.15	6138.4
1021	440.15	6138.4
1059	191.43	6087.1
1061	212.46	6087.1
967	392.79	6081.7
961	392.79	6081.7
559	439.76	6036.2
59	439.76	6036.2
598	486.47	5969.2
186	486.47	5969.2
39	460.61	5906.5
297	460.61	5906.5
822	414.91	5884.5
234	414.91	5884.5
774	435.13	5854.6
1022	435.13	5854.6
959	454.21	5848.3
965	454.21	5848.3
829	557.58	5843.7
263	557.58	5843.7
22	237.56	5801.2
270	237.56	5801.2
8	498.08	5774.4
288	498.08	5774.4
40	462.81	5683.4
298	462.81	5683.4
791	304.76	5627.9
1049	304.76	5627.9
113	502.72	5551.9
97	502.72	5551.9
602	621.98	5479.3
190	621.98	5479.3
889	647.22	5473.8

Table 3.AA.1 (continued)

729	647.22	5473.8
801	668.08	5416.6
245	668.08	5416.6
109	428.05	5415.9
93	428.05	5415.9
1009	205.82	5391.4
519	205.82	5391.4
835	428.41	5341.1
257	428.41	5341.1
98	507.32	5336.2
114	507.32	5336.2
7	460.61	5331.4
287	460.61	5331.4
819	318.58	5321.6
231	318.58	5321.6
971	409.05	5320.4
503	409.05	5320.4
730	644.60	5244.4
890	644.60	5244.4
802	665.46	5198.9
246	665.46	5198.9
894	521.78	5179.9
734	521.78	5179.9
566	478.81	5152.6
88	478.81	5152.6
572	414.22	5147.2
82	414.22	5147.2
125	593.20	5006.7
131	593.20	5006.7
19	205.82	4992.3
267	205.82	4992.3
827	618.99	4979.3
261	618.99	4979.3
713	516.13	4917.3
905	516.13	4917.3
786	204.16	4910.8
1056	204.16	4910.8
787	461.19	4861.2
1045	461.19	4861.2
792	212.46	4820.1
1050	212.46	4820.1
781	241.09	4818.6
1051	241.09	4818.6
33	241.07	4732.3
303	241.07	4732.3
806	542.63	4677.9
250	542.63	4677.9
714	515.92	4677.4
906	515.92	4677.4
24	241.26	4641.8
272	241.26	4641.8
788	456.16	4622.0
1046	456.16	4622.0

Table 3.AA.1 (continued)

782	240.88	4611.9
1052	240.88	4611.9
34	247.53	4550.3
304	247.53	4550.3
875	503.09	4521.1
473	503.09	4521.1
558	393.19	4481.7
58	393.19	4481.7
102	642.83	4421.6
118	642.83	4421.6
38	469.15	4390.9
308	469.15	4390.9
44	512.21	4384.9
302	512.21	4384.9
568	212.46	4379.7
78	212.46	4379.7
876	505.28	4355.3
474	505.28	4355.3
533	218.64	4340.1
65	218.64	4340.1
861	461.01	4303.2
449	461.01	4303.2
23	241.07	4220.4
271	241.07	4220.4
561	515.73	4201.8
83	515.73	4201.8
104	686.69	4174.5
120	686.69	4174.5
717	493.68	4153.9
909	493.68	4153.9
862	463.20	4129.5
450	463.20	4129.5
554	191.43	4129.1
54	191.43	4129.1
611	502.90	4105.4
209	502.90	4105.4
1062	191.43	4077.3
1060	212.46	4077.3
5	363.95	4071.8
285	363.95	4071.8
866	512.60	4044.4
454	512.60	4044.4
562	515.52	3999.5
84	515.52	3999.5
973	304.58	3963.5
505	304.58	3963.5
612	507.50	3950.8
210	507.50	3950.8
743	668.25	3923.9
913	668.25	3923.9
103	667.87	3869.8
119	667.87	3869.8
808	465.99	3811.0

Table 3.AA.1 (continued)

252	465.99	3811.0
868	516.30	3808.7
456	516.30	3808.7
604	665.84	3772.7
192	665.84	3772.7
744	665.63	3759.3
914	665.63	3759.3
1006	302.15	3753.8
528	302.15	3753.8
599	525.65	3693.9
187	525.65	3693.9
41	480.46	3688.5
299	480.46	3688.5
742	521.28	3673.8
924	521.28	3673.8
748	542.81	3667.7
918	542.81	3667.7
1011	230.52	3650.9
521	230.52	3650.9
3	253.13	3643.1
283	253.13	3643.1
531	237.00	3616.8
63	237.00	3616.8
171	667.87	3585.0
341	667.87	3585.0
1001	516.11	3572.4
523	516.11	3572.4
1057	241.07	3569.9
1058	241.09	3569.9
867	516.11	3504.3
455	516.11	3504.3
807	503.09	3490.0
251	503.09	3490.0
953	350.72	3460.8
937	350.72	3460.8
172	670.07	3454.1
342	670.07	3454.1
25	502.72	3428.4
273	502.72	3428.4
1002	511.09	3413.8
524	511.09	3413.8
115	546.50	3408.2
99	546.50	3408.2
936	383.19	3360.0
952	383.19	3360.0
565	493.29	3343.6
87	493.29	3343.6
775	388.19	3316.2
1023	388.19	3316.2
26	504.92	3293.0
274	504.92	3293.0
803	640.05	3252.4
247	640.05	3252.4

Table 3.AA.1 (continued)

601	593.40	3203.9
189	593.40	3203.9
731	619.20	3192.9
891	619.20	3192.9
821	386.34	3187.2
233	386.34	3187.2
603	647.02	3153.5
191	647.02	3153.5
21	230.52	3144.2
269	230.52	3144.2
571	364.12	3131.7
81	364.12	3131.7
874	597.73	3130.1
484	597.73	3130.1
893	557.78	3128.4
733	557.78	3128.4
880	554.68	3121.1
478	554.68	3121.1
735	482.23	3085.7
895	482.23	3085.7
537	557.84	3079.1
69	557.84	3079.1
32	558.01	3075.1
280	558.01	3075.1
785	218.64	3062.1
1055	218.64	3062.1
30	554.31	3049.5
278	554.31	3049.5
610	686.06	3021.5
220	686.06	3021.5
616	643.01	3011.6
214	643.01	3011.6
569	253.31	3010.7
79	253.31	3010.7
538	557.63	2959.9
70	557.63	2959.9
555	232.28	2909.5
55	232.28	2909.5
834	396.30	2898.9
256	396.30	2898.9
877	522.93	2872.1
475	522.93	2872.1
31	557.82	2833.8
279	557.82	2833.8
92	395.94	2821.7
108	395.94	2821.7
542	520.91	2811.8
74	520.91	2811.8
35	308.24	2783.2
305	308.24	2783.2
869	723.18	2778.6
479	723.18	2778.6
783	237.00	2763.2

Table 3.AA.1 (continued)

1053	237.00	2763.2
737	558.20	2752.6
919	558.20	2752.6
805	578.64	2731.3
249	578.64	2731.3
557	343.09	2686.2
57	343.09	2686.2
870	720.56	2651.0
480	720.56	2651.0
165	557.82	2633.3
347	557.82	2633.3
820	354.23	2624.2
232	354.23	2624.2
37	419.05	2623.8
307	419.05	2623.8
738	557.99	2613.7
920	557.99	2613.7
669	723.20	2606.2
685	723.20	2606.2
674	686.27	2598.7
690	686.27	2598.7
719	461.19	2598.5
911	461.19	2598.5
863	480.86	2576.0
451	480.86	2576.0
613	546.68	2569.0
211	546.68	2569.0
715	512.04	2532.2
907	512.04	2532.2
15	515.73	2529.2
295	515.73	2529.2
130	561.09	2524.9
124	561.09	2524.9
912	442.73	2523.7
720	442.73	2523.7
166	562.43	2523.4
348	562.43	2523.4
670	722.98	2497.6
686	722.98	2497.6
101	614.26	2493.5
117	614.26	2493.5
865	505.56	2490.9
453	505.56	2490.9
789	409.23	2482.5
1047	409.23	2482.5
796	424.90	2470.7
240	424.90	2470.7
170	697.94	2455.9
352	697.94	2455.9
176	719.46	2450.9
346	719.46	2450.9
1010	219.94	2443.8
520	219.94	2443.8

Table 3.AA.1 (continued)

741	535.76	2431.9
923	535.76	2431.9
43	505.16	2389.9
301	505.16	2389.9
1005	359.69	2335.5
527	359.69	2335.5
20	219.94	2335.3
268	219.94	2335.3
828	590.05	2307.2
262	590.05	2307.2
745	640.23	2287.0
915	640.23	2287.0
173	687.72	2283.5
343	687.72	2283.5
972	358.58	2272.6
504	358.58	2272.6
776	337.73	2262.2
1024	337.73	2262.2
790	358.76	2255.7
1048	358.76	2255.7
641	668.08	2232.9
405	668.08	2232.9
747	578.81	2195.5
917	578.81	2195.5
563	511.64	2190.4
85	511.64	2190.4
605	722.99	2189.6
215	722.99	2189.6
966	425.27	2174.0
960	425.27	2174.0
642	670.27	2147.1
406	670.27	2147.1
27	522.57	2082.7
275	522.57	2082.7
606	722.78	2077.2
216	722.78	2077.2
896	445.14	2033.5
736	445.14	2033.5
609	700.55	2016.4
219	700.55	2016.4
716	504.63	2008.7
908	504.63	2008.7
1003	464.15	1995.6
525	464.15	1995.6
873	633.74	1989.6
483	633.74	1989.6
539	553.75	1894.6
71	553.75	1894.6
646	719.67	1858.5
410	719.67	1858.5
29	547.27	1839.1
277	547.27	1839.1
532	229.59	1762.5

Table 3.AA.1 (continued)

64	229.59	1762.5
541	535.39	1746.4
73	535.39	1746.4
339	722.99	1704.2
147	722.99	1704.2
470	597.75	1703.1
850	597.75	1703.1
42	494.58	1693.5
300	494.58	1693.5
698	707.30	1638.6
704	707.30	1638.6
879	547.63	1637.9
477	547.63	1637.9
615	614.43	1629.7
213	614.43	1629.7
673	700.75	1627.7
689	700.75	1627.7
655	689.11	1624.7
429	689.11	1624.7
648	723.37	1591.5
412	723.37	1591.5
656	691.30	1568.0
430	691.30	1568.0
4	310.31	1542.4
284	310.31	1542.4
167	601.61	1539.9
349	601.61	1539.9
564	504.23	1534.5
86	504.23	1534.5
671	719.11	1526.7
687	719.11	1526.7
157	688.93	1526.3
317	688.93	1526.3
871	695.16	1510.5
481	695.16	1510.5
693	744.23	1507.9
699	744.23	1507.9
116	582.15	1480.1
100	582.15	1480.1
169	669.36	1472.4
351	669.36	1472.4
158	691.13	1469.9
318	691.13	1469.9
694	744.01	1439.8
700	744.01	1439.8
600	561.29	1418.5
188	561.29	1418.5
581	744.05	1405.8
201	744.05	1405.8
878	537.05	1388.9
476	537.05	1388.9
643	687.92	1379.6
407	687.92	1379.6

Table 3.AA.1 (continued)

739	554.12	1371.8
921	554.12	1371.8
647	723.18	1371.4
411	723.18	1371.4
324	744.22	1366.0
164	744.22	1366.0
582	743.84	1351.7
202	743.84	1351.7
676	649.80	1344.5
692	649.80	1344.5
544	484.44	1312.5
76	484.44	1312.5
804	611.11	1305.8
248	611.11	1305.8
323	744.04	1291.0
163	744.04	1291.0
175	712.42	1280.3
345	712.42	1280.3
469	633.76	1271.6
849	633.76	1271.6
162	740.53	1242.2
322	740.53	1242.2
294	469.17	1218.8
14	469.17	1218.8
784	229.59	1213.5
1054	229.59	1213.5
740	546.71	1190.0
922	546.71	1190.0
614	582.32	1187.2
212	582.32	1187.2
586	707.12	1176.6
206	707.12	1176.6
732	590.26	1141.5
892	590.26	1141.5
675	668.25	1123.4
691	668.25	1123.4
570	310.48	1116.1
80	310.48	1116.1
556	289.45	1114.0
56	289.45	1114.0
174	701.84	1112.9
344	701.84	1112.9
543	502.90	1102.3
75	502.90	1102.3
645	712.62	1091.0
409	712.62	1091.0
426	762.24	1079.0
630	762.24	1079.0
607	718.90	1072.1
217	718.90	1072.1
472	521.11	1063.0
852	521.11	1063.0
657	708.95	1060.5

Table 3.AA.1 (continued)

431	708.95	1060.5
703	721.78	1029.4
697	721.78	1029.4
864	494.97	1022.4
452	494.97	1022.4
36	365.41	1016.1
306	365.41	1016.1
608	711.49	1011.3
218	711.49	1011.3
465	723.20	1007.9
845	723.20	1007.9
654	762.23	991.07
440	762.23	991.07
660	740.70	985.83
434	740.70	985.83
471	558.20	970.94
851	558.20	970.94
159	708.78	965.92
319	708.78	965.92
466	720.58	959.63
846	720.58	959.63
421	799.17	941.12
625	799.17	941.12
1004	413.69	917.29
526	413.69	917.29
422	798.96	912.41
626	798.96	912.41
293	419.06	889.35
13	419.06	889.35
28	536.68	872.32
276	536.68	872.32
583	739.96	868.59
203	739.96	868.59
872	666.22	849.09
482	666.22	849.09
848	666.23	840.21
468	666.23	840.21
695	740.14	830.55
701	740.14	830.55
16	553.19	830.52
296	553.19	830.52
540	546.34	829.18
72	546.34	829.18
631	744.23	822.48
427	744.23	822.48
629	776.72	822.22
425	776.72	822.22
746	611.29	814.79
916	611.29	814.79
289	241.09	807.20
9	241.09	807.20
290	247.54	773.26
10	247.54	773.26

Table 3.AA.1 (continued)

161	733.48	738.27
321	733.48	738.27
383	799.16	703.75
367	799.16	703.75
585	721.61	693.42
205	721.61	693.42
338	697.95	684.34
146	697.95	684.34
653	776.71	681.54
439	776.71	681.54
672	711.70	656.73
688	711.70	656.73
333	557.84	656.32
141	557.84	656.32
391	744.04	656.25
385	744.04	656.25
423	795.08	655.66
627	795.08	655.66
334	562.44	640.57
142	562.44	640.57
392	746.23	633.22
386	746.23	633.22
649	799.16	618.09
435	799.16	618.09
148	741.81	613.22
340	741.81	613.22
644	702.04	612.18
408	702.04	612.18
588	670.65	596.69
208	670.65	596.69
428	725.77	589.52
632	725.77	589.52
650	798.94	583.47
436	798.94	583.47
377	744.05	580.97
361	744.05	580.97
378	746.25	572.78
362	746.25	572.78
628	787.67	565.47
424	787.67	565.47
292	365.43	559.87
12	365.43	559.87
168	637.25	556.48
350	637.25	556.48
658	723.07	553.00
432	723.07	553.00
337	669.38	543.49
145	669.38	543.49
382	795.64	529.90
366	795.64	529.90
467	695.17	528.21
847	695.17	528.21
384	799.34	520.95

Table 3.AA.1 (continued)

368	799.34	520.95
587	689.11	514.62
207	689.11	514.62
335	601.62	499.72
143	601.62	499.72
363	763.90	499.55
379	763.90	499.55
659	733.65	478.35
433	733.65	478.35
160	722.90	461.95
320	722.90	461.95
381	788.60	456.66
365	788.60	456.66
291	308.25	443.77
11	308.25	443.77
393	763.88	427.23
387	763.88	427.23
364	778.02	426.31
380	778.02	426.31
514	302.16	423.47
982	302.16	423.47
702	732.73	420.16
696	732.73	420.16
390	795.63	407.64
396	795.63	407.64
336	637.27	402.64
144	637.27	402.64
509	516.13	392.75
977	516.13	392.75
584	732.55	385.45
204	732.55	385.45
510	511.10	378.40
978	511.10	378.40
652	787.66	372.01
438	787.66	372.01
513	359.70	295.07
981	359.70	295.07
651	795.07	273.94
437	795.07	273.94
511	464.17	250.00
979	464.17	250.00
394	778.00	221.24
388	778.00	221.24
389	788.58	201.65
395	788.58	201.65
512	413.70	166.68
980	413.70	166.68

Table 3.AA.2

TITLE=
MPC-24 Structural Analysis

SUBTITLE 1 =
Component: Fuel Basket
SUBTITLE 2 =
Load Combination: F2 (See Table 3.1.3)
SUBTITLE 3 =
Stress Result: Primary Membrane (PM)

PRINT ELEMENT TABLE ITEMS PER ELEMENT

STAT ELEM	CURRENT REF TEMP	CURRENT PM	PREVIOUS ALLOW	PREVIOUS SF
982	725.00	-487.49	15400.	31.591
514	725.00	-486.70	15400.	31.641
981	725.00	-486.59	15400.	31.649
513	725.00	-485.81	15400.	31.700
980	725.00	-485.70	15400.	31.707
512	725.00	-484.92	15400.	31.758
979	725.00	-484.81	15400.	31.765
511	725.00	-484.02	15400.	31.817
978	725.00	-483.91	15400.	31.824
510	725.00	-483.13	15400.	31.875
977	725.00	-483.02	15400.	31.883
509	725.00	-482.24	15400.	31.934
850	725.00	-466.32	15400.	33.025
470	725.00	-465.64	15400.	33.073
849	725.00	-465.42	15400.	33.088
469	725.00	-464.74	15400.	33.137
848	725.00	-464.53	15400.	33.152
468	725.00	-463.85	15400.	33.200
847	725.00	-463.64	15400.	33.216
467	725.00	-462.96	15400.	33.264
846	725.00	-462.74	15400.	33.280
466	725.00	-462.06	15400.	33.329
845	725.00	-461.85	15400.	33.344
465	725.00	-461.17	15400.	33.393
852	725.00	-457.16	15400.	33.687
851	725.00	-457.07	15400.	33.693
472	725.00	-456.45	15400.	33.739
471	725.00	-456.37	15400.	33.745
777	725.00	-431.83	15400.	35.662
1025	725.00	-431.43	15400.	35.695
776	725.00	-430.68	15400.	35.757
1024	725.00	-430.29	15400.	35.790
775	725.00	-429.96	15400.	35.817
1023	725.00	-429.56	15400.	35.851
774	725.00	-429.23	15400.	35.878
1022	725.00	-428.83	15400.	35.911
773	725.00	-428.51	15400.	35.939
1021	725.00	-428.11	15400.	35.972
736	725.00	-413.94	15400.	37.203

Table 3.AA.2 (continued)

735	725.00	-413.86	15400.	37.211
896	725.00	-413.57	15400.	37.236
895	725.00	-413.49	15400.	37.244
734	725.00	-409.96	15400.	37.565
894	725.00	-409.59	15400.	37.598
733	725.00	-409.07	15400.	37.647
893	725.00	-408.70	15400.	37.681
732	725.00	-408.17	15400.	37.729
892	725.00	-407.80	15400.	37.763
731	725.00	-407.28	15400.	37.812
891	725.00	-406.91	15400.	37.846
730	725.00	-406.39	15400.	37.895
890	725.00	-406.02	15400.	37.929
729	725.00	-405.49	15400.	37.978
889	725.00	-405.12	15400.	38.013
630	725.00	-386.51	15400.	39.844
426	725.00	-385.95	15400.	39.902
629	725.00	-385.61	15400.	39.936
425	725.00	-385.06	15400.	39.994
628	725.00	-384.72	15400.	40.029
424	725.00	-384.16	15400.	40.087
627	725.00	-383.83	15400.	40.122
423	725.00	-383.27	15400.	40.181
626	725.00	-382.93	15400.	40.216
422	725.00	-382.38	15400.	40.275
625	725.00	-382.04	15400.	40.310
421	725.00	-381.48	15400.	40.369
632	725.00	-364.43	15400.	42.258
631	725.00	-364.34	15400.	42.268
428	725.00	-363.87	15400.	42.323
427	725.00	-363.79	15400.	42.333
940	725.00	-334.05	15400.	46.101
956	725.00	-334.04	15400.	46.102
939	725.00	-333.97	15400.	46.112
955	725.00	-333.96	15400.	46.113
938	725.00	-333.34	15400.	46.199
954	725.00	-333.33	15400.	46.200
937	725.00	-332.61	15400.	46.300
953	725.00	-332.61	15400.	46.301
936	725.00	-331.89	15400.	46.401
952	725.00	-331.88	15400.	46.402
935	725.00	-331.16	15400.	46.503
951	725.00	-331.15	15400.	46.504
690	725.00	-331.09	15400.	46.513
674	725.00	-330.83	15400.	46.550
934	725.00	-330.43	15400.	46.605
950	725.00	-330.43	15400.	46.606
689	725.00	-330.20	15400.	46.639
673	725.00	-329.93	15400.	46.676
933	725.00	-329.71	15400.	46.708
949	725.00	-329.70	15400.	46.709
688	725.00	-329.30	15400.	46.765
672	725.00	-329.04	15400.	46.803

Table 3.AA.2 (continued)

687	725.00	-328.41	15400.	46.892
671	725.00	-328.15	15400.	46.930
686	725.00	-327.52	15400.	47.020
670	725.00	-327.25	15400.	47.058
685	725.00	-326.62	15400.	47.149
669	725.00	-326.36	15400.	47.187
692	725.00	-322.19	15400.	47.798
691	725.00	-322.11	15400.	47.810
676	725.00	-321.90	15400.	47.841
675	725.00	-321.82	15400.	47.854
366	725.00	-306.10	15400.	50.310
382	725.00	-305.75	15400.	50.368
365	725.00	-305.21	15400.	50.457
381	725.00	-304.85	15400.	50.516
364	725.00	-304.32	15400.	50.605
380	725.00	-303.96	15400.	50.665
363	725.00	-303.42	15400.	50.754
379	725.00	-303.07	15400.	50.814
362	725.00	-302.53	15400.	50.904
378	725.00	-302.17	15400.	50.964
361	725.00	-301.64	15400.	51.055
377	725.00	-301.28	15400.	51.115
368	725.00	-272.16	15400.	56.585
367	725.00	-272.08	15400.	56.602
384	725.00	-271.75	15400.	56.671
383	725.00	-271.66	15400.	56.688
720	725.00	-263.04	15400.	58.546
912	725.00	-263.03	15400.	58.549
719	725.00	-262.96	15400.	58.564
911	725.00	-262.95	15400.	58.567
718	725.00	-255.85	15400.	60.193
910	725.00	-255.80	15400.	60.202
717	725.00	-254.95	15400.	60.404
909	725.00	-254.91	15400.	60.413
716	725.00	-254.06	15400.	60.616
908	725.00	-254.02	15400.	60.626
715	725.00	-253.17	15400.	60.830
907	725.00	-253.12	15400.	60.840
714	725.00	-252.27	15400.	61.045
906	725.00	-252.23	15400.	61.055
646	725.00	-251.78	15400.	61.165
410	725.00	-251.54	15400.	61.223
713	725.00	-251.38	15400.	61.262
905	725.00	-251.34	15400.	61.272
645	725.00	-250.89	15400.	61.382
409	725.00	-250.65	15400.	61.441
644	725.00	-249.99	15400.	61.602
408	725.00	-249.75	15400.	61.661
643	725.00	-249.10	15400.	61.823
407	725.00	-248.86	15400.	61.882
642	725.00	-248.21	15400.	62.045
406	725.00	-247.97	15400.	62.105
641	725.00	-247.31	15400.	62.269

Table 3.AA.2 (continued)

405	725.00	-247.07	15400.	62.330
648	725.00	-230.66	15400.	66.765
647	725.00	-230.58	15400.	66.789
412	725.00	-230.45	15400.	66.827
411	725.00	-230.37	15400.	66.850
385	725.00	213.22	15400.	72.226
391	725.00	213.22	15400.	72.227
386	725.00	213.12	15400.	72.260
392	725.00	213.12	15400.	72.261
387	725.00	212.21	15400.	72.571
393	725.00	212.20	15400.	72.572
388	725.00	211.29	15400.	72.884
394	725.00	211.29	15400.	72.885
389	725.00	210.38	15400.	73.200
395	725.00	210.38	15400.	73.201
390	725.00	209.47	15400.	73.519
396	725.00	209.47	15400.	73.520
655	725.00	200.61	15400.	76.766
429	725.00	200.55	15400.	76.790
656	725.00	200.51	15400.	76.805
649	725.00	200.47	15400.	76.820
430	725.00	200.45	15400.	76.829
435	725.00	200.40	15400.	76.845
650	725.00	200.37	15400.	76.859
436	725.00	200.30	15400.	76.884
657	725.00	199.60	15400.	77.156
431	725.00	199.53	15400.	77.180
651	725.00	199.45	15400.	77.211
437	725.00	199.39	15400.	77.236
658	725.00	198.68	15400.	77.510
432	725.00	198.62	15400.	77.534
652	725.00	198.54	15400.	77.565
438	725.00	198.48	15400.	77.590
659	725.00	197.77	15400.	77.867
433	725.00	197.71	15400.	77.892
653	725.00	197.63	15400.	77.923
439	725.00	197.57	15400.	77.949
660	725.00	196.86	15400.	78.228
434	725.00	196.80	15400.	78.253
654	725.00	196.72	15400.	78.284
440	725.00	196.65	15400.	78.310
146	725.00	-194.05	15400.	79.361
338	725.00	-193.82	15400.	79.457
145	725.00	-193.16	15400.	79.728
337	725.00	-192.92	15400.	79.825
144	725.00	-192.26	15400.	80.098
336	725.00	-192.03	15400.	80.196
143	725.00	-191.37	15400.	80.472
335	725.00	-191.14	15400.	80.571
165	725.00	190.48	15400.	80.850
142	725.00	-190.48	15400.	80.850
347	725.00	190.45	15400.	80.862
166	725.00	190.38	15400.	80.893

Table 3.AA.2 (continued)

348	725.00	190.35	15400.	80.905
334	725.00	-190.24	15400.	80.949
141	725.00	-189.58	15400.	81.231
167	725.00	189.46	15400.	81.282
349	725.00	189.43	15400.	81.295
333	725.00	-189.35	15400.	81.331
171	725.00	188.65	15400.	81.632
341	725.00	188.62	15400.	81.645
168	725.00	188.55	15400.	81.675
172	725.00	188.55	15400.	81.677
350	725.00	188.52	15400.	81.688
342	725.00	188.52	15400.	81.689
169	725.00	187.64	15400.	82.072
173	725.00	187.64	15400.	82.073
351	725.00	187.61	15400.	82.085
343	725.00	187.61	15400.	82.086
699	725.00	187.37	15400.	82.192
693	725.00	187.37	15400.	82.192
700	725.00	187.27	15400.	82.236
694	725.00	187.26	15400.	82.237
170	725.00	186.73	15400.	82.473
174	725.00	186.72	15400.	82.474
352	725.00	186.70	15400.	82.486
344	725.00	186.70	15400.	82.487
701	725.00	186.35	15400.	82.639
695	725.00	186.35	15400.	82.639
875	725.00	186.30	15400.	82.663
473	725.00	186.27	15400.	82.677
876	725.00	186.20	15400.	82.708
474	725.00	186.17	15400.	82.722
869	725.00	186.16	15400.	82.726
479	725.00	186.12	15400.	82.741
870	725.00	186.06	15400.	82.771
480	725.00	186.02	15400.	82.786
175	725.00	185.81	15400.	82.879
345	725.00	185.78	15400.	82.892
702	725.00	185.44	15400.	83.045
696	725.00	185.44	15400.	83.046
877	725.00	185.29	15400.	83.115
475	725.00	185.25	15400.	83.129
871	725.00	185.14	15400.	83.179
481	725.00	185.11	15400.	83.194
176	725.00	184.90	15400.	83.288
346	725.00	184.87	15400.	83.300
703	725.00	184.53	15400.	83.455
697	725.00	184.53	15400.	83.456
878	725.00	184.37	15400.	83.526
476	725.00	184.34	15400.	83.540
872	725.00	184.23	15400.	83.590
482	725.00	184.20	15400.	83.606
704	725.00	183.62	15400.	83.870
698	725.00	183.62	15400.	83.871
879	725.00	183.46	15400.	83.941

Table 3.AA.2 (continued)

477	725.00	183.43	15400.	83.956
873	725.00	183.32	15400.	84.006
483	725.00	183.29	15400.	84.022
880	725.00	182.55	15400.	84.361
478	725.00	182.52	15400.	84.375
874	725.00	182.41	15400.	84.426
484	725.00	182.37	15400.	84.442
148	725.00	-180.63	15400.	85.256
147	725.00	-180.55	15400.	85.294
340	725.00	-180.37	15400.	85.382
339	725.00	-180.28	15400.	85.421
611	725.00	177.77	15400.	86.626
209	725.00	177.74	15400.	86.644
612	725.00	177.67	15400.	86.676
210	725.00	177.64	15400.	86.694
613	725.00	176.76	15400.	87.123
211	725.00	176.73	15400.	87.141
605	725.00	176.23	15400.	87.386
215	725.00	176.20	15400.	87.402
606	725.00	176.13	15400.	87.436
216	725.00	176.10	15400.	87.452
614	725.00	175.85	15400.	87.575
212	725.00	175.81	15400.	87.593
607	725.00	175.22	15400.	87.891
217	725.00	175.18	15400.	87.908
615	725.00	174.94	15400.	88.032
213	725.00	174.90	15400.	88.049
608	725.00	174.30	15400.	88.351
218	725.00	174.27	15400.	88.368
616	725.00	174.03	15400.	88.493
214	725.00	173.99	15400.	88.511
609	725.00	173.39	15400.	88.816
219	725.00	173.36	15400.	88.832
743	725.00	173.04	15400.	88.996
913	725.00	173.01	15400.	89.013
744	725.00	172.94	15400.	89.049
914	725.00	172.91	15400.	89.066
737	725.00	172.75	15400.	89.144
919	725.00	172.72	15400.	89.161
738	725.00	172.65	15400.	89.197
920	725.00	172.62	15400.	89.213
866	725.00	-172.57	15400.	89.237
454	725.00	-172.56	15400.	89.246
610	725.00	172.48	15400.	89.285
220	725.00	172.45	15400.	89.302
745	725.00	172.03	15400.	89.521
915	725.00	171.99	15400.	89.538
739	725.00	171.74	15400.	89.670
921	725.00	171.71	15400.	89.687
865	725.00	-171.68	15400.	89.701
453	725.00	-171.66	15400.	89.711
746	725.00	171.11	15400.	89.998
916	725.00	171.08	15400.	90.015

Table 3.AA.2 (continued)

740	725.00	170.83	15400.	90.149
922	725.00	170.80	15400.	90.166
864	725.00	-170.79	15400.	90.170
452	725.00	-170.77	15400.	90.180
747	725.00	170.20	15400.	90.480
917	725.00	170.17	15400.	90.498
741	725.00	169.92	15400.	90.633
863	725.00	-169.89	15400.	90.644
923	725.00	169.88	15400.	90.650
451	725.00	-169.88	15400.	90.654
456	725.00	-169.31	15400.	90.958
868	725.00	-169.31	15400.	90.959
748	725.00	169.29	15400.	90.968
918	725.00	169.26	15400.	90.985
455	725.00	-169.23	15400.	91.002
867	725.00	-169.23	15400.	91.002
742	725.00	169.00	15400.	91.122
862	725.00	-169.00	15400.	91.124
450	725.00	-168.98	15400.	91.133
924	725.00	168.97	15400.	91.139
861	725.00	-168.11	15400.	91.608
449	725.00	-168.09	15400.	91.618
127	725.00	166.08	15400.	92.725
121	725.00	166.08	15400.	92.726
128	725.00	165.98	15400.	92.782
122	725.00	165.98	15400.	92.783
129	725.00	165.07	15400.	93.295
123	725.00	165.07	15400.	93.296
130	725.00	164.16	15400.	93.813
124	725.00	164.15	15400.	93.814
831	725.00	163.48	15400.	94.200
253	725.00	163.48	15400.	94.202
832	725.00	163.38	15400.	94.259
254	725.00	163.38	15400.	94.261
131	725.00	163.24	15400.	94.337
125	725.00	163.24	15400.	94.338
833	725.00	162.47	15400.	94.788
255	725.00	162.46	15400.	94.790
33	725.00	162.40	15400.	94.828
303	725.00	162.37	15400.	94.848
132	725.00	162.33	15400.	94.867
126	725.00	162.33	15400.	94.868
34	725.00	162.31	15400.	94.883
304	725.00	162.27	15400.	94.902
825	725.00	161.65	15400.	95.269
259	725.00	161.65	15400.	95.270
834	725.00	161.56	15400.	95.323
256	725.00	161.55	15400.	95.325
826	725.00	161.55	15400.	95.329
260	725.00	161.54	15400.	95.331
35	725.00	161.39	15400.	95.419
305	725.00	161.36	15400.	95.439
39	725.00	160.66	15400.	95.856

Table 3.AA.2 (continued)

835	725.00	160.64	15400.	95.864
257	725.00	160.64	15400.	95.866
827	725.00	160.63	15400.	95.871
261	725.00	160.63	15400.	95.872
297	725.00	160.63	15400.	95.873
40	725.00	160.56	15400.	95.917
298	725.00	160.53	15400.	95.934
36	725.00	160.48	15400.	95.961
306	725.00	160.45	15400.	95.981
836	725.00	159.73	15400.	96.411
258	725.00	159.73	15400.	96.414
828	725.00	159.72	15400.	96.418
262	725.00	159.72	15400.	96.419
41	725.00	159.64	15400.	96.465
299	725.00	159.61	15400.	96.482
37	725.00	159.57	15400.	96.510
307	725.00	159.54	15400.	96.530
829	725.00	158.81	15400.	96.972
263	725.00	158.81	15400.	96.973
42	725.00	158.73	15400.	97.019
300	725.00	158.70	15400.	97.037
38	725.00	158.66	15400.	97.064
308	725.00	158.62	15400.	97.085
963	725.00	158.41	15400.	97.218
957	725.00	158.41	15400.	97.219
964	725.00	158.30	15400.	97.281
958	725.00	158.30	15400.	97.282
830	725.00	157.90	15400.	97.532
264	725.00	157.90	15400.	97.533
43	725.00	157.82	15400.	97.580
301	725.00	157.79	15400.	97.597
965	725.00	157.39	15400.	97.845
959	725.00	157.39	15400.	97.845
44	725.00	156.91	15400.	98.147
302	725.00	156.88	15400.	98.165
966	725.00	156.48	15400.	98.415
960	725.00	156.48	15400.	98.415
967	725.00	155.57	15400.	98.992
961	725.00	155.57	15400.	98.992
968	725.00	154.66	15400.	99.575
962	725.00	154.66	15400.	99.576
568	725.00	150.25	15400.	102.49
78	725.00	150.22	15400.	102.52
569	725.00	149.63	15400.	102.92
561	725.00	149.63	15400.	102.92
79	725.00	149.60	15400.	102.94
83	725.00	149.60	15400.	102.94
562	725.00	149.53	15400.	102.99
84	725.00	149.49	15400.	103.01
570	725.00	148.72	15400.	103.55
80	725.00	148.69	15400.	103.57
563	725.00	148.61	15400.	103.62
85	725.00	148.58	15400.	103.65

Table 3.AA.2 (continued)

571	725.00	147.81	15400.	104.19
81	725.00	147.78	15400.	104.21
564	725.00	147.70	15400.	104.26
86	725.00	147.67	15400.	104.29
572	725.00	146.90	15400.	104.84
82	725.00	146.86	15400.	104.86
565	725.00	146.79	15400.	104.91
87	725.00	146.76	15400.	104.93
566	725.00	145.88	15400.	105.57
88	725.00	145.85	15400.	105.59
792	725.00	144.48	15400.	106.59
1050	725.00	144.44	15400.	106.62
602	725.00	-141.19	15400.	109.07
190	725.00	-141.05	15400.	109.18
604	725.00	-140.61	15400.	109.52
603	725.00	-140.53	15400.	109.59
192	725.00	-140.47	15400.	109.63
191	725.00	-140.39	15400.	109.69
601	725.00	-140.30	15400.	109.76
189	725.00	-140.16	15400.	109.87
600	725.00	-139.41	15400.	110.47
188	725.00	-139.27	15400.	110.58
599	725.00	-138.51	15400.	111.18
187	725.00	-138.37	15400.	111.29
598	725.00	-137.62	15400.	111.90
186	725.00	-137.48	15400.	112.02
597	725.00	-136.73	15400.	112.63
185	725.00	-136.59	15400.	112.75
1056	725.00	-118.43	15400.	130.04
786	725.00	-118.38	15400.	130.09
1055	725.00	-117.52	15400.	131.05
785	725.00	-117.47	15400.	131.10
1054	725.00	-116.60	15400.	132.07
784	725.00	-116.56	15400.	132.12
1053	725.00	-115.69	15400.	133.11
61	725.00	115.68	15400.	133.12
783	725.00	-115.65	15400.	133.16
529	725.00	115.63	15400.	133.18
62	725.00	115.58	15400.	133.24
530	725.00	115.53	15400.	133.30
1052	725.00	-114.78	15400.	134.17
782	725.00	-114.74	15400.	134.22
63	725.00	114.69	15400.	134.28
531	725.00	114.64	15400.	134.33
1051	725.00	-113.87	15400.	135.24
781	725.00	-113.82	15400.	135.30
64	725.00	113.79	15400.	135.33
532	725.00	113.75	15400.	135.39
89	725.00	112.95	15400.	136.34
105	725.00	112.94	15400.	136.35
65	725.00	112.90	15400.	136.40
90	725.00	112.85	15400.	136.46
533	725.00	112.85	15400.	136.46

Table 3.AA.2 (continued)

106	725.00	112.84	15400.	136.47
1	725.00	112.77	15400.	136.56
281	725.00	112.74	15400.	136.60
1059	725.00	112.69	15400.	136.65
1061	725.00	112.68	15400.	136.67
2	725.00	112.68	15400.	136.68
282	725.00	112.64	15400.	136.71
95	725.00	112.02	15400.	137.47
111	725.00	112.01	15400.	137.49
66	725.00	112.01	15400.	137.49
91	725.00	111.96	15400.	137.55
534	725.00	111.96	15400.	137.55
107	725.00	111.95	15400.	137.56
17	725.00	111.94	15400.	137.57
265	725.00	111.91	15400.	137.61
18	725.00	111.84	15400.	137.69
266	725.00	111.81	15400.	137.73
3	725.00	111.78	15400.	137.77
283	725.00	111.75	15400.	137.81
96	725.00	111.39	15400.	138.25
112	725.00	111.38	15400.	138.26
92	725.00	111.07	15400.	138.65
108	725.00	111.05	15400.	138.67
19	725.00	110.95	15400.	138.80
267	725.00	110.92	15400.	138.84
4	725.00	110.89	15400.	138.88
284	725.00	110.86	15400.	138.92
93	725.00	110.17	15400.	139.78
109	725.00	110.16	15400.	139.79
20	725.00	110.06	15400.	139.93
268	725.00	110.03	15400.	139.96
5	725.00	110.00	15400.	140.01
285	725.00	109.96	15400.	140.05
94	725.00	109.28	15400.	140.92
110	725.00	109.27	15400.	140.94
21	725.00	109.16	15400.	141.07
269	725.00	109.13	15400.	141.11
6	725.00	109.10	15400.	141.15
286	725.00	109.07	15400.	141.19
7	725.00	108.54	15400.	141.89
287	725.00	108.48	15400.	141.97
22	725.00	108.27	15400.	142.23
270	725.00	108.24	15400.	142.28
523	725.00	108.12	15400.	142.43
1001	725.00	108.10	15400.	142.46
524	725.00	108.02	15400.	142.57
1002	725.00	108.00	15400.	142.60
8	725.00	107.91	15400.	142.71
288	725.00	107.85	15400.	142.79
525	725.00	107.11	15400.	143.78
1003	725.00	107.08	15400.	143.81
526	725.00	106.20	15400.	145.02
1004	725.00	106.17	15400.	145.05

Table 3.AA.2 (continued)

23	725.00	105.72	15400.	145.66
271	725.00	105.67	15400.	145.74
527	725.00	105.28	15400.	146.27
1005	725.00	105.26	15400.	146.30
24	725.00	105.09	15400.	146.53
272	725.00	105.04	15400.	146.61
528	725.00	104.37	15400.	147.55
1006	725.00	104.35	15400.	147.58
16	725.00	-88.315	15400.	174.38
15	725.00	-88.233	15400.	174.54
296	725.00	-88.193	15400.	174.62
295	725.00	-88.111	15400.	174.78
1057	725.00	-79.802	15400.	192.98
1058	725.00	-79.754	15400.	193.09
250	725.00	-77.674	15400.	198.27
806	725.00	-77.342	15400.	199.12
14	725.00	-77.320	15400.	199.17
294	725.00	-77.227	15400.	199.41
249	725.00	-76.780	15400.	200.57
805	725.00	-76.449	15400.	201.44
13	725.00	-76.427	15400.	201.50
293	725.00	-76.334	15400.	201.75
248	725.00	-75.887	15400.	202.93
804	725.00	-75.555	15400.	203.82
12	725.00	-75.533	15400.	203.88
292	725.00	-75.440	15400.	204.14
247	725.00	-74.994	15400.	205.35
803	725.00	-74.662	15400.	206.26
11	725.00	-74.640	15400.	206.32
291	725.00	-74.547	15400.	206.58
206	725.00	-74.358	15400.	207.11
586	725.00	-74.131	15400.	207.74
246	725.00	-74.100	15400.	207.83
802	725.00	-73.769	15400.	208.76
10	725.00	-73.747	15400.	208.82
290	725.00	-73.654	15400.	209.09
205	725.00	-73.465	15400.	209.62
585	725.00	-73.238	15400.	210.27
245	725.00	-73.207	15400.	210.36
801	725.00	-72.875	15400.	211.32
9	725.00	-72.853	15400.	211.38
289	725.00	-72.760	15400.	211.65
204	725.00	-72.571	15400.	212.20
584	725.00	-72.345	15400.	212.87
203	725.00	-71.678	15400.	214.85
583	725.00	-71.451	15400.	215.53
202	725.00	-70.785	15400.	217.56
162	725.00	-70.769	15400.	217.61
236	725.00	-70.624	15400.	218.06
824	725.00	-70.622	15400.	218.06
322	725.00	-70.563	15400.	218.25
582	725.00	-70.558	15400.	218.26
235	725.00	-70.543	15400.	218.31

Table 3.AA.2 (continued)

823	725.00	-70.541	15400.	218.31
234	725.00	-69.914	15400.	220.27
822	725.00	-69.912	15400.	220.28
201	725.00	-69.891	15400.	220.34
161	725.00	-69.876	15400.	220.39
321	725.00	-69.670	15400.	221.04
581	725.00	-69.665	15400.	221.06
233	725.00	-69.187	15400.	222.58
821	725.00	-69.186	15400.	222.59
160	725.00	-68.982	15400.	223.25
320	725.00	-68.776	15400.	223.91
232	725.00	-68.461	15400.	224.94
820	725.00	-68.460	15400.	224.95
159	725.00	-68.089	15400.	226.17
319	725.00	-67.883	15400.	226.86
231	725.00	-67.735	15400.	227.36
819	725.00	-67.733	15400.	227.36
158	725.00	-67.196	15400.	229.18
230	725.00	-67.009	15400.	229.82
818	725.00	-67.007	15400.	229.83
318	725.00	-66.990	15400.	229.89
157	725.00	-66.302	15400.	232.27
229	725.00	-66.282	15400.	232.34
817	725.00	-66.281	15400.	232.34
317	725.00	-66.096	15400.	232.99
252	725.00	-56.710	15400.	271.56
251	725.00	-56.629	15400.	271.94
808	725.00	-56.348	15400.	273.30
807	725.00	-56.267	15400.	273.70
560	725.00	-48.700	15400.	316.22
60	725.00	-48.639	15400.	316.62
559	725.00	-48.619	15400.	316.75
59	725.00	-48.558	15400.	317.15
558	725.00	-47.990	15400.	320.90
58	725.00	-47.929	15400.	321.31
557	725.00	-47.264	15400.	325.83
57	725.00	-47.203	15400.	326.25
556	725.00	-46.538	15400.	330.92
56	725.00	-46.476	15400.	331.35
555	725.00	-45.811	15400.	336.16
55	725.00	-45.750	15400.	336.61
554	725.00	-45.085	15400.	341.58
54	725.00	-45.024	15400.	342.04
208	725.00	-40.542	15400.	379.85
207	725.00	-40.461	15400.	380.61
588	725.00	-40.257	15400.	382.54
587	725.00	-40.176	15400.	383.31
506	725.00	-37.465	15400.	411.05
974	725.00	-37.049	15400.	415.67
505	725.00	-36.572	15400.	421.09
973	725.00	-36.156	15400.	425.94
504	725.00	-35.679	15400.	431.63
972	725.00	-35.262	15400.	436.73

Table 3.AA.2 (continued)

118	725.00	-34.910	15400.	441.13
102	725.00	-34.802	15400.	442.51
503	725.00	-34.785	15400.	442.71
971	725.00	-34.369	15400.	448.08
117	725.00	-34.017	15400.	452.72
101	725.00	-33.909	15400.	454.16
502	725.00	-33.892	15400.	454.38
970	725.00	-33.476	15400.	460.04
116	725.00	-33.124	15400.	464.92
100	725.00	-33.015	15400.	466.45
501	725.00	-32.999	15400.	466.68
969	725.00	-32.582	15400.	472.65
115	725.00	-32.230	15400.	477.81
99	725.00	-32.122	15400.	479.42
114	725.00	-31.337	15400.	491.43
98	725.00	-31.229	15400.	493.14
113	725.00	-30.444	15400.	505.85
97	725.00	-30.335	15400.	507.66
542	725.00	-30.242	15400.	509.23
74	725.00	-30.225	15400.	509.51
541	725.00	-29.349	15400.	524.73
73	725.00	-29.332	15400.	525.03
1012	725.00	-28.516	15400.	540.04
522	725.00	-28.484	15400.	540.65
540	725.00	-28.455	15400.	541.20
72	725.00	-28.438	15400.	541.52
1011	725.00	-27.605	15400.	557.88
521	725.00	-27.572	15400.	558.53
539	725.00	-27.562	15400.	558.74
71	725.00	-27.545	15400.	559.08
1010	725.00	-26.693	15400.	576.94
538	725.00	-26.669	15400.	577.46
520	725.00	-26.660	15400.	577.63
70	725.00	-26.652	15400.	577.82
30	725.00	-26.308	15400.	585.37
278	725.00	-26.270	15400.	586.23
1009	725.00	-25.781	15400.	597.34
537	725.00	-25.775	15400.	597.47
69	725.00	-25.758	15400.	597.86
519	725.00	-25.749	15400.	598.09
164	725.00	-25.421	15400.	605.80
29	725.00	-25.415	15400.	605.95
277	725.00	-25.376	15400.	606.86
163	725.00	-25.340	15400.	607.74
324	725.00	-25.212	15400.	610.82
323	725.00	-25.131	15400.	612.79
1008	725.00	-24.869	15400.	619.25
518	725.00	-24.837	15400.	620.05
28	725.00	-24.522	15400.	628.02
276	725.00	-24.483	15400.	629.01
1007	725.00	-23.957	15400.	642.82
517	725.00	-23.925	15400.	643.68
27	725.00	-23.628	15400.	651.76

Table 3.AA.2 (continued)

275	725.00	-23.590	15400.	652.83
26	725.00	-22.735	15400.	677.37
274	725.00	-22.696	15400.	678.52
25	725.00	-21.842	15400.	705.08
273	725.00	-21.803	15400.	706.32
76	725.00	-18.195	15400.	846.40
544	725.00	-18.182	15400.	846.97
75	725.00	-18.114	15400.	850.19
543	725.00	-18.101	15400.	850.77
120	725.00	-10.055	15400.	1531.6
119	725.00	-9.9738	15400.	1544.0
104	725.00	-9.9200	15400.	1552.4
244	725.00	-9.8933	15400.	1556.6
800	725.00	-9.8872	15400.	1557.6
103	725.00	-9.8388	15400.	1565.2
243	725.00	-9.8121	15400.	1569.5
799	725.00	-9.8059	15400.	1570.5
791	725.00	-9.0493	15400.	1701.8
1049	725.00	-9.0282	15400.	1705.8
242	725.00	-8.8264	15400.	1744.8
798	725.00	-8.8220	15400.	1745.6
241	725.00	-7.9330	15400.	1941.3
797	725.00	-7.9287	15400.	1942.3
790	725.00	-7.6119	15400.	2023.1
1048	725.00	-7.5909	15400.	2028.7
240	725.00	-7.0397	15400.	2187.6
796	725.00	-7.0353	15400.	2188.9
789	725.00	-6.7000	15400.	2298.5
1047	725.00	-6.6790	15400.	2305.7
239	725.00	-6.1464	15400.	2505.5
795	725.00	-6.1420	15400.	2507.3
788	725.00	-5.7882	15400.	2660.6
1046	725.00	-5.7671	15400.	2670.3
238	725.00	-5.2530	15400.	2931.6
794	725.00	-5.2487	15400.	2934.1
787	725.00	-4.8763	15400.	3158.2
1045	725.00	-4.8552	15400.	3171.8
237	725.00	-4.3597	15400.	3532.3
793	725.00	-4.3554	15400.	3535.9
1062	725.00	-4.0305	15400.	3820.8
1060	725.00	-4.0152	15400.	3835.5
32	725.00	-3.0702	15400.	5016.0
280	725.00	-3.0570	15400.	5037.6
31	725.00	-2.9890	15400.	5152.3
279	725.00	-2.9758	15400.	5175.1
567	725.00	-.94117	15400.	16363.
77	725.00	-.90545	15400.	17008.

Table 3.AA.3

TITLE=
MPC-24 Structural Analysis

SUBTITLE 1 =
Component: Fuel Basket
SUBTITLE 2 =
Load Combination: F2 (See Table 3.1.3)
SUBTITLE 3 =
Stress Result: Primary Local Plus Primary Bending (PL+PB)

PRINT ELEMENT TABLE ITEMS PER ELEMENT

STAT ELEM	CURRENT REF TEMP	CURRENT PL+PB	PREVIOUS ALLOW	PREVIOUS SF
390	725.00	8255.6	23100.	2.7981
396	725.00	8255.6	23100.	2.7981
391	725.00	7345.8	23100.	3.1446
385	725.00	7345.2	23100.	3.1449
392	725.00	7127.1	23100.	3.2412
386	725.00	7126.5	23100.	3.2414
660	725.00	7115.2	23100.	3.2466
654	725.00	7115.0	23100.	3.2467
434	725.00	7109.2	23100.	3.2493
440	725.00	7109.0	23100.	3.2494
377	725.00	6405.8	23100.	3.6061
361	725.00	6401.4	23100.	3.6086
378	725.00	6170.8	23100.	3.7435
362	725.00	6166.6	23100.	3.7460
157	725.00	6088.2	23100.	3.7942
317	725.00	6086.2	23100.	3.7955
649	725.00	6027.1	23100.	3.8327
435	725.00	6020.8	23100.	3.8367
655	725.00	5999.9	23100.	3.8501
170	725.00	5995.1	23100.	3.8532
429	725.00	5993.3	23100.	3.8543
176	725.00	5993.2	23100.	3.8543
352	725.00	5992.3	23100.	3.8550
346	725.00	5990.4	23100.	3.8561
704	725.00	5927.8	23100.	3.8969
698	725.00	5927.8	23100.	3.8969
650	725.00	5861.6	23100.	3.9409
436	725.00	5855.6	23100.	3.9450
158	725.00	5851.2	23100.	3.9479
318	725.00	5849.2	23100.	3.9492
656	725.00	5835.0	23100.	3.9589
430	725.00	5828.6	23100.	3.9632
880	725.00	5776.9	23100.	3.9987
874	725.00	5776.8	23100.	3.9988
478	725.00	5773.8	23100.	4.0008
484	725.00	5773.6	23100.	4.0009
384	725.00	5729.0	23100.	4.0321
368	725.00	5725.9	23100.	4.0343
382	725.00	5334.9	23100.	4.3300

Table 3.AA.3 (continued)

366	725.00	5330.4	23100.	4.3336
162	725.00	5277.5	23100.	4.3771
322	725.00	5275.7	23100.	4.3786
171	725.00	5169.6	23100.	4.4685
341	725.00	5166.6	23100.	4.4710
383	725.00	5138.9	23100.	4.4952
367	725.00	5136.2	23100.	4.4975
641	725.00	5087.0	23100.	4.5410
405	725.00	5081.5	23100.	4.5459
164	725.00	5053.9	23100.	4.5707
324	725.00	5051.3	23100.	4.5731
172	725.00	5046.9	23100.	4.5771
342	725.00	5044.1	23100.	4.5796
393	725.00	4945.6	23100.	4.6708
387	725.00	4945.1	23100.	4.6713
632	725.00	4943.2	23100.	4.6731
428	725.00	4939.2	23100.	4.6769
642	725.00	4904.0	23100.	4.7104
406	725.00	4898.8	23100.	4.7154
616	725.00	4855.7	23100.	4.7573
648	725.00	4855.1	23100.	4.7579
610	725.00	4854.1	23100.	4.7588
214	725.00	4852.6	23100.	4.7604
220	725.00	4851.0	23100.	4.7619
412	725.00	4849.9	23100.	4.7630
165	725.00	4818.9	23100.	4.7936
347	725.00	4816.2	23100.	4.7963
625	725.00	4731.6	23100.	4.8820
421	725.00	4727.5	23100.	4.8863
166	725.00	4703.9	23100.	4.9108
348	725.00	4701.3	23100.	4.9135
693	725.00	4632.2	23100.	4.9869
699	725.00	4631.9	23100.	4.9872
869	725.00	4574.6	23100.	5.0496
479	725.00	4571.7	23100.	5.0528
748	725.00	4566.2	23100.	5.0589
742	725.00	4565.9	23100.	5.0592
918	725.00	4563.2	23100.	5.0622
924	725.00	4562.9	23100.	5.0625
626	725.00	4558.4	23100.	5.0676
422	725.00	4554.4	23100.	5.0720
875	725.00	4547.5	23100.	5.0797
473	725.00	4544.0	23100.	5.0836
694	725.00	4522.6	23100.	5.1077
700	725.00	4522.3	23100.	5.1080
870	725.00	4469.6	23100.	5.1683
480	725.00	4466.8	23100.	5.1715
631	725.00	4459.6	23100.	5.1799
427	725.00	4455.7	23100.	5.1844
389	725.00	4452.8	23100.	5.1878
395	725.00	4452.6	23100.	5.1879
876	725.00	4443.0	23100.	5.1992
474	725.00	4439.7	23100.	5.2031

Table 3.AA.3 (continued)

163	725.00	4418.2	23100.	5.2283
323	725.00	4415.7	23100.	5.2313
581	725.00	4371.6	23100.	5.2841
647	725.00	4366.0	23100.	5.2909
201	725.00	4365.5	23100.	5.2915
411	725.00	4361.1	23100.	5.2969
630	725.00	4348.9	23100.	5.3117
426	725.00	4346.3	23100.	5.3149
586	725.00	4246.9	23100.	5.4393
206	725.00	4241.9	23100.	5.4457
582	725.00	4194.8	23100.	5.5068
202	725.00	4188.9	23100.	5.5145
588	725.00	4180.9	23100.	5.5251
208	725.00	4176.7	23100.	5.5307
646	725.00	4166.1	23100.	5.5447
410	725.00	4161.4	23100.	5.5510
651	725.00	4156.2	23100.	5.5579
437	725.00	4152.6	23100.	5.5628
657	725.00	4135.0	23100.	5.5865
431	725.00	4131.1	23100.	5.5918
852	725.00	4081.9	23100.	5.6591
472	725.00	4081.6	23100.	5.6596
379	725.00	4052.7	23100.	5.7000
363	725.00	4050.4	23100.	5.7032
676	725.00	4047.2	23100.	5.7076
692	725.00	4045.7	23100.	5.7098
861	725.00	4024.6	23100.	5.7398
449	725.00	4020.4	23100.	5.7458
1006	725.00	3984.6	23100.	5.7974
528	725.00	3982.6	23100.	5.8002
333	725.00	3956.1	23100.	5.8391
141	725.00	3955.6	23100.	5.8398
862	725.00	3879.4	23100.	5.9545
450	725.00	3875.4	23100.	5.9607
605	725.00	3832.3	23100.	6.0277
215	725.00	3828.5	23100.	6.0337
97	725.00	3826.1	23100.	6.0375
334	725.00	3825.0	23100.	6.0392
142	725.00	3824.6	23100.	6.0399
113	725.00	3823.8	23100.	6.0411
1012	725.00	3823.1	23100.	6.0423
522	725.00	3819.5	23100.	6.0478
659	725.00	3793.7	23100.	6.0890
433	725.00	3790.2	23100.	6.0947
653	725.00	3788.2	23100.	6.0979
439	725.00	3784.6	23100.	6.1037
25	725.00	3784.0	23100.	6.1046
273	725.00	3780.1	23100.	6.1110
606	725.00	3763.3	23100.	6.1383
216	725.00	3759.6	23100.	6.1444
132	725.00	3744.2	23100.	6.1696
126	725.00	3744.2	23100.	6.1696
173	725.00	3724.1	23100.	6.2029

Table 3.AA.3 (continued)

343	725.00	3722.4	23100.	6.2057
159	725.00	3714.5	23100.	6.2189
319	725.00	3713.2	23100.	6.2211
851	725.00	3702.2	23100.	6.2396
471	725.00	3701.7	23100.	6.2405
98	725.00	3690.4	23100.	6.2594
114	725.00	3688.3	23100.	6.2631
675	725.00	3666.2	23100.	6.3007
691	725.00	3665.0	23100.	6.3029
587	725.00	3648.6	23100.	6.3311
207	725.00	3644.8	23100.	6.3377
26	725.00	3641.5	23100.	6.3436
274	725.00	3637.7	23100.	6.3502
32	725.00	3586.4	23100.	6.4409
280	725.00	3582.6	23100.	6.4478
465	725.00	3551.2	23100.	6.5049
845	725.00	3550.3	23100.	6.5066
611	725.00	3535.7	23100.	6.5333
209	725.00	3532.5	23100.	6.5393
836	725.00	3503.6	23100.	6.5932
258	725.00	3503.4	23100.	6.5936
830	725.00	3501.8	23100.	6.5966
264	725.00	3501.5	23100.	6.5971
612	725.00	3473.2	23100.	6.6510
210	725.00	3470.1	23100.	6.6569
167	725.00	3450.1	23100.	6.6955
349	725.00	3448.6	23100.	6.6984
466	725.00	3431.6	23100.	6.7315
846	725.00	3430.8	23100.	6.7332
808	725.00	3406.5	23100.	6.7811
252	725.00	3406.0	23100.	6.7821
38	725.00	3388.0	23100.	6.8181
44	725.00	3386.3	23100.	6.8216
308	725.00	3385.1	23100.	6.8241
302	725.00	3383.3	23100.	6.8276
669	725.00	3372.2	23100.	6.8500
685	725.00	3369.3	23100.	6.8560
148	725.00	3353.4	23100.	6.8886
340	725.00	3351.9	23100.	6.8915
866	725.00	3343.7	23100.	6.9086
454	725.00	3339.6	23100.	6.9171
695	725.00	3317.2	23100.	6.9636
701	725.00	3317.0	23100.	6.9642
871	725.00	3304.5	23100.	6.9904
481	725.00	3302.9	23100.	6.9938
877	725.00	3283.3	23100.	7.0356
475	725.00	3281.2	23100.	7.0400
30	725.00	3272.9	23100.	7.0580
278	725.00	3269.3	23100.	7.0658
670	725.00	3252.6	23100.	7.1019
643	725.00	3251.4	23100.	7.1046
686	725.00	3249.8	23100.	7.1081
407	725.00	3248.1	23100.	7.1119

Table 3.AA.3 (continued)

470	725.00	3232.7	23100.	7.1458
850	725.00	3231.8	23100.	7.1477
737	725.00	3199.9	23100.	7.2191
968	725.00	3199.0	23100.	7.2209
962	725.00	3199.0	23100.	7.2209
919	725.00	3196.4	23100.	7.2268
801	725.00	3196.4	23100.	7.2269
245	725.00	3195.2	23100.	7.2295
806	725.00	3175.4	23100.	7.2747
250	725.00	3173.7	23100.	7.2786
736	725.00	3152.0	23100.	7.3286
738	725.00	3150.8	23100.	7.3315
896	725.00	3150.7	23100.	7.3318
920	725.00	3147.5	23100.	7.3392
743	725.00	3144.9	23100.	7.3453
674	725.00	3144.3	23100.	7.3467
690	725.00	3142.1	23100.	7.3518
913	725.00	3141.5	23100.	7.3531
31	725.00	3123.2	23100.	7.3962
169	725.00	3119.8	23100.	7.4043
279	725.00	3119.7	23100.	7.4046
351	725.00	3118.1	23100.	7.4085
703	725.00	3101.1	23100.	7.4490
697	725.00	3101.0	23100.	7.4491
868	725.00	3099.5	23100.	7.4528
744	725.00	3097.0	23100.	7.4588
456	725.00	3096.1	23100.	7.4609
914	725.00	3093.8	23100.	7.4665
381	725.00	3093.6	23100.	7.4671
365	725.00	3091.0	23100.	7.4734
802	725.00	3068.9	23100.	7.5272
246	725.00	3067.8	23100.	7.5298
175	725.00	3049.0	23100.	7.5762
345	725.00	3047.3	23100.	7.5804
161	725.00	3017.6	23100.	7.6552
321	725.00	3016.4	23100.	7.6580
879	725.00	2995.8	23100.	7.7108
477	725.00	2993.9	23100.	7.7156
627	725.00	2992.2	23100.	7.7200
873	725.00	2990.3	23100.	7.7249
423	725.00	2989.4	23100.	7.7274
483	725.00	2988.3	23100.	7.7301
807	725.00	2972.3	23100.	7.7717
251	725.00	2972.0	23100.	7.7725
147	725.00	2950.2	23100.	7.8301
339	725.00	2948.6	23100.	7.8343
607	725.00	2920.0	23100.	7.9108
217	725.00	2917.7	23100.	7.9172
867	725.00	2915.1	23100.	7.9243
455	725.00	2911.8	23100.	7.9332
102	725.00	2897.4	23100.	7.9726
118	725.00	2894.9	23100.	7.9796
735	725.00	2875.7	23100.	8.0327

Table 3.AA.3 (continued)

895	725.00	2874.4	23100.	8.0364
597	725.00	2819.6	23100.	8.1926
185	725.00	2818.5	23100.	8.1958
104	725.00	2812.0	23100.	8.2149
338	725.00	2811.9	23100.	8.2150
146	725.00	2811.5	23100.	8.2163
120	725.00	2810.0	23100.	8.2205
598	725.00	2735.7	23100.	8.4440
186	725.00	2734.6	23100.	8.4473
613	725.00	2688.3	23100.	8.5929
211	725.00	2686.4	23100.	8.5988
121	725.00	2665.3	23100.	8.6669
127	725.00	2665.0	23100.	8.6679
629	725.00	2659.5	23100.	8.6857
425	725.00	2658.0	23100.	8.6907
122	725.00	2645.6	23100.	8.7314
128	725.00	2645.3	23100.	8.7325
335	725.00	2635.8	23100.	8.7638
143	725.00	2635.7	23100.	8.7643
583	725.00	2596.8	23100.	8.8954
203	725.00	2593.2	23100.	8.9078
863	725.00	2564.5	23100.	9.0075
451	725.00	2562.1	23100.	9.0159
604	725.00	2543.2	23100.	9.0829
192	725.00	2542.8	23100.	9.0844
544	725.00	2528.2	23100.	9.1370
585	725.00	2525.7	23100.	9.1460
76	725.00	2525.1	23100.	9.1480
205	725.00	2523.0	23100.	9.1559
982	725.00	2489.4	23100.	9.2795
514	725.00	2489.1	23100.	9.2805
739	725.00	2486.3	23100.	9.2909
921	725.00	2484.3	23100.	9.2985
713	725.00	2475.5	23100.	9.3313
905	725.00	2471.0	23100.	9.3485
99	725.00	2460.6	23100.	9.3879
115	725.00	2459.4	23100.	9.3926
615	725.00	2449.3	23100.	9.4311
213	725.00	2447.5	23100.	9.4384
745	725.00	2443.3	23100.	9.4543
915	725.00	2441.4	23100.	9.4619
792	725.00	2423.8	23100.	9.5305
1050	725.00	2420.5	23100.	9.5435
786	725.00	2398.1	23100.	9.6327
825	725.00	2396.9	23100.	9.6375
259	725.00	2396.5	23100.	9.6392
1056	725.00	2394.9	23100.	9.6456
718	725.00	2394.1	23100.	9.6488
645	725.00	2390.3	23100.	9.6640
910	725.00	2390.2	23100.	9.6646
609	725.00	2389.5	23100.	9.6674
714	725.00	2388.7	23100.	9.6706
826	725.00	2388.2	23100.	9.6727

Table 3.AA.3 (continued)

260	725.00	2387.8	23100.	9.6744
1007	725.00	2387.7	23100.	9.6744
219	725.00	2387.7	23100.	9.6745
409	725.00	2387.5	23100.	9.6755
720	725.00	2385.7	23100.	9.6827
517	725.00	2384.5	23100.	9.6877
906	725.00	2384.3	23100.	9.6883
912	725.00	2383.2	23100.	9.6928
1001	725.00	2382.0	23100.	9.6979
523	725.00	2379.9	23100.	9.7061
1008	725.00	2368.6	23100.	9.7528
518	725.00	2365.4	23100.	9.7656
103	725.00	2362.0	23100.	9.7800
1002	725.00	2360.7	23100.	9.7854
119	725.00	2360.2	23100.	9.7872
524	725.00	2358.7	23100.	9.7934
394	725.00	2358.3	23100.	9.7951
388	725.00	2358.0	23100.	9.7966
27	725.00	2349.8	23100.	9.8308
275	725.00	2347.5	23100.	9.8403
467	725.00	2345.7	23100.	9.8476
847	725.00	2345.5	23100.	9.8487
572	725.00	2324.6	23100.	9.9374
566	725.00	2323.5	23100.	9.9417
82	725.00	2321.6	23100.	9.9500
88	725.00	2320.6	23100.	9.9543
39	725.00	2303.1	23100.	10.030
297	725.00	2299.5	23100.	10.046
40	725.00	2298.9	23100.	10.048
791	725.00	2296.2	23100.	10.060
298	725.00	2295.5	23100.	10.063
719	725.00	2295.3	23100.	10.064
1049	725.00	2293.6	23100.	10.072
911	725.00	2292.9	23100.	10.075
747	725.00	2291.1	23100.	10.082
917	725.00	2289.3	23100.	10.090
741	725.00	2280.0	23100.	10.132
923	725.00	2278.3	23100.	10.139
123	725.00	2243.9	23100.	10.295
129	725.00	2243.6	23100.	10.296
603	725.00	2236.9	23100.	10.327
191	725.00	2236.5	23100.	10.328
729	725.00	2175.3	23100.	10.619
889	725.00	2173.1	23100.	10.630
543	725.00	2171.6	23100.	10.637
75	725.00	2168.8	23100.	10.651
671	725.00	2166.3	23100.	10.663
687	725.00	2164.6	23100.	10.672
542	725.00	2128.3	23100.	10.854
74	725.00	2125.2	23100.	10.870
730	725.00	2110.3	23100.	10.946
890	725.00	2108.2	23100.	10.957
827	725.00	2084.6	23100.	11.081

Table 3.AA.3 (continued)

261	725.00	2084.3	23100.	11.083
652	725.00	2045.0	23100.	11.296
831	725.00	2044.7	23100.	11.298
253	725.00	2044.5	23100.	11.298
438	725.00	2043.8	23100.	11.303
832	725.00	2043.7	23100.	11.303
254	725.00	2043.6	23100.	11.304
41	725.00	2035.9	23100.	11.346
537	725.00	2035.0	23100.	11.351
299	725.00	2033.7	23100.	11.358
69	725.00	2030.9	23100.	11.374
658	725.00	2029.2	23100.	11.384
432	725.00	2027.7	23100.	11.392
469	725.00	2023.6	23100.	11.415
849	725.00	2023.3	23100.	11.417
977	725.00	2008.1	23100.	11.503
509	725.00	2008.1	23100.	11.504
734	725.00	2003.6	23100.	11.529
894	725.00	2002.5	23100.	11.536
174	725.00	1995.5	23100.	11.576
344	725.00	1994.9	23100.	11.580
1009	725.00	1971.4	23100.	11.717
33	725.00	1970.3	23100.	11.724
34	725.00	1970.3	23100.	11.724
519	725.00	1969.7	23100.	11.728
599	725.00	1968.2	23100.	11.737
303	725.00	1967.8	23100.	11.739
304	725.00	1967.8	23100.	11.739
187	725.00	1967.4	23100.	11.742
538	725.00	1955.6	23100.	11.812
70	725.00	1951.6	23100.	11.836
1005	725.00	1947.1	23100.	11.864
527	725.00	1945.9	23100.	11.871
1003	725.00	1944.6	23100.	11.879
525	725.00	1943.5	23100.	11.886
978	725.00	1939.5	23100.	11.910
510	725.00	1939.5	23100.	11.910
974	725.00	1935.8	23100.	11.933
673	725.00	1934.7	23100.	11.940
689	725.00	1933.7	23100.	11.946
506	725.00	1932.7	23100.	11.952
803	725.00	1911.7	23100.	12.084
247	725.00	1911.3	23100.	12.086
865	725.00	1905.6	23100.	12.122
380	725.00	1904.2	23100.	12.131
364	725.00	1903.7	23100.	12.134
453	725.00	1903.1	23100.	12.138
805	725.00	1895.0	23100.	12.190
249	725.00	1894.0	23100.	12.197
24	725.00	1884.4	23100.	12.258
272	725.00	1881.7	23100.	12.276
29	725.00	1861.5	23100.	12.409
277	725.00	1859.4	23100.	12.423

Table 3.AA.3 (continued)

833	725.00	1809.4	23100.	12.767
255	725.00	1809.3	23100.	12.767
1011	725.00	1804.5	23100.	12.801
521	725.00	1802.3	23100.	12.817
168	725.00	1790.4	23100.	12.902
350	725.00	1790.0	23100.	12.905
35	725.00	1773.3	23100.	13.026
305	725.00	1772.0	23100.	13.036
16	725.00	1763.3	23100.	13.100
296	725.00	1762.8	23100.	13.104
981	725.00	1736.1	23100.	13.306
513	725.00	1735.6	23100.	13.310
872	725.00	1733.7	23100.	13.324
482	725.00	1733.2	23100.	13.328
958	725.00	1726.3	23100.	13.381
957	725.00	1726.3	23100.	13.381
963	725.00	1726.1	23100.	13.383
964	725.00	1726.1	23100.	13.383
940	725.00	1721.3	23100.	13.420
956	725.00	1721.3	23100.	13.420
131	725.00	1721.0	23100.	13.422
125	725.00	1721.0	23100.	13.423
878	725.00	1717.8	23100.	13.447
476	725.00	1717.0	23100.	13.454
1057	725.00	1714.5	23100.	13.473
1058	725.00	1711.5	23100.	13.497
696	725.00	1706.0	23100.	13.540
702	725.00	1705.9	23100.	13.542
602	725.00	1687.7	23100.	13.687
190	725.00	1687.2	23100.	13.691
608	725.00	1671.0	23100.	13.824
218	725.00	1670.0	23100.	13.832
939	725.00	1669.1	23100.	13.840
955	725.00	1669.1	23100.	13.840
835	725.00	1647.9	23100.	14.018
257	725.00	1647.7	23100.	14.019
244	725.00	1640.4	23100.	14.082
800	725.00	1640.1	23100.	14.085
23	725.00	1622.0	23100.	14.241
271	725.00	1619.5	23100.	14.264
959	725.00	1614.3	23100.	14.309
965	725.00	1614.2	23100.	14.310
229	725.00	1614.0	23100.	14.312
817	725.00	1613.7	23100.	14.315
715	725.00	1595.2	23100.	14.481
907	725.00	1592.5	23100.	14.506
17	725.00	1586.2	23100.	14.563
265	725.00	1583.0	23100.	14.593
829	725.00	1576.8	23100.	14.650
263	725.00	1576.7	23100.	14.651
230	725.00	1576.4	23100.	14.654
818	725.00	1576.1	23100.	14.657
37	725.00	1569.7	23100.	14.717

Table 3.AA.3 (continued)

644	725.00	1568.5	23100.	14.728
307	725.00	1567.8	23100.	14.734
408	725.00	1567.0	23100.	14.741
289	725.00	1551.0	23100.	14.893
9	725.00	1550.6	23100.	14.898
101	725.00	1548.0	23100.	14.923
160	725.00	1547.4	23100.	14.928
320	725.00	1546.8	23100.	14.934
15	725.00	1546.6	23100.	14.936
117	725.00	1546.3	23100.	14.939
295	725.00	1546.0	23100.	14.942
89	725.00	1538.0	23100.	15.020
105	725.00	1538.0	23100.	15.020
18	725.00	1537.4	23100.	15.025
266	725.00	1534.4	23100.	15.055
969	725.00	1532.2	23100.	15.076
501	725.00	1529.4	23100.	15.104
290	725.00	1518.2	23100.	15.215
10	725.00	1517.8	23100.	15.219
731	725.00	1512.2	23100.	15.275
891	725.00	1510.6	23100.	15.292
43	725.00	1501.8	23100.	15.381
301	725.00	1500.1	23100.	15.399
337	725.00	1499.6	23100.	15.404
145	725.00	1499.4	23100.	15.406
90	725.00	1497.7	23100.	15.423
106	725.00	1497.7	23100.	15.423
614	725.00	1497.6	23100.	15.425
212	725.00	1496.9	23100.	15.431
717	725.00	1477.4	23100.	15.636
909	725.00	1475.1	23100.	15.660
970	725.00	1467.7	23100.	15.739
967	725.00	1465.7	23100.	15.760
961	725.00	1465.7	23100.	15.761
502	725.00	1465.0	23100.	15.768
124	725.00	1436.3	23100.	16.083
130	725.00	1436.1	23100.	16.085
144	725.00	1416.5	23100.	16.308
336	725.00	1416.3	23100.	16.310
740	725.00	1416.0	23100.	16.313
922	725.00	1415.2	23100.	16.323
628	725.00	1395.7	23100.	16.550
424	725.00	1394.0	23100.	16.571
243	725.00	1389.0	23100.	16.630
799	725.00	1388.7	23100.	16.634
746	725.00	1383.9	23100.	16.692
916	725.00	1383.1	23100.	16.701
828	725.00	1375.2	23100.	16.797
262	725.00	1375.1	23100.	16.799
42	725.00	1367.1	23100.	16.898
300	725.00	1366.2	23100.	16.908
111	725.00	1339.0	23100.	17.251
95	725.00	1338.4	23100.	17.259

Table 3.AA.3 (continued)

949	725.00	1330.5	23100.	17.362
933	725.00	1330.3	23100.	17.364
979	725.00	1309.4	23100.	17.641
511	725.00	1309.2	23100.	17.645
1	725.00	1306.9	23100.	17.675
281	725.00	1304.3	23100.	17.710
96	725.00	1300.4	23100.	17.763
563	725.00	1300.4	23100.	17.763
562	725.00	1300.4	23100.	17.763
112	725.00	1299.7	23100.	17.774
84	725.00	1298.4	23100.	17.791
85	725.00	1298.4	23100.	17.791
777	725.00	1296.4	23100.	17.818
950	725.00	1295.0	23100.	17.838
934	725.00	1294.8	23100.	17.841
1025	725.00	1294.4	23100.	17.846
22	725.00	1289.3	23100.	17.917
270	725.00	1285.9	23100.	17.964
733	725.00	1282.3	23100.	18.015
893	725.00	1281.7	23100.	18.023
541	725.00	1281.5	23100.	18.026
73	725.00	1279.8	23100.	18.050
2	725.00	1276.7	23100.	18.093
938	725.00	1275.6	23100.	18.110
954	725.00	1275.5	23100.	18.110
282	725.00	1274.2	23100.	18.129
8	725.00	1245.7	23100.	18.544
288	725.00	1244.5	23100.	18.562
848	725.00	1229.9	23100.	18.783
468	725.00	1229.5	23100.	18.788
539	725.00	1228.4	23100.	18.805
71	725.00	1225.8	23100.	18.844
231	725.00	1225.8	23100.	18.845
819	725.00	1225.7	23100.	18.846
973	725.00	1222.3	23100.	18.898
505	725.00	1220.2	23100.	18.931
864	725.00	1219.3	23100.	18.945
452	725.00	1218.5	23100.	18.957
100	725.00	1200.5	23100.	19.243
116	725.00	1200.1	23100.	19.248
291	725.00	1183.0	23100.	19.526
11	725.00	1182.9	23100.	19.528
36	725.00	1170.6	23100.	19.733
600	725.00	1170.4	23100.	19.738
306	725.00	1170.3	23100.	19.739
188	725.00	1169.8	23100.	19.747
256	725.00	1169.3	23100.	19.756
834	725.00	1169.3	23100.	19.756
1010	725.00	1168.5	23100.	19.769
520	725.00	1168.1	23100.	19.777
7	725.00	1158.8	23100.	19.934
287	725.00	1158.1	23100.	19.946
569	725.00	1147.6	23100.	20.130

Table 3.AA.3 (continued)

568	725.00	1147.6	23100.	20.130
78	725.00	1145.6	23100.	20.164
79	725.00	1145.6	23100.	20.164
789	725.00	1129.5	23100.	20.452
788	725.00	1129.5	23100.	20.452
1047	725.00	1127.9	23100.	20.480
1046	725.00	1127.9	23100.	20.480
1004	725.00	1122.8	23100.	20.574
526	725.00	1122.4	23100.	20.581
107	725.00	1121.1	23100.	20.605
91	725.00	1121.0	23100.	20.606
561	725.00	1119.4	23100.	20.636
83	725.00	1116.2	23100.	20.695
787	725.00	1106.6	23100.	20.874
1045	725.00	1103.9	23100.	20.926
960	725.00	1096.6	23100.	21.065
966	725.00	1096.5	23100.	21.067
19	725.00	1082.5	23100.	21.339
267	725.00	1080.7	23100.	21.375
564	725.00	1075.6	23100.	21.476
86	725.00	1074.9	23100.	21.491
672	725.00	1049.6	23100.	22.008
688	725.00	1049.0	23100.	22.021
28	725.00	1027.7	23100.	22.477
236	725.00	1027.5	23100.	22.482
785	725.00	1027.4	23100.	22.485
276	725.00	1026.9	23100.	22.495
824	725.00	1026.5	23100.	22.503
1055	725.00	1025.6	23100.	22.522
980	725.00	1013.2	23100.	22.800
512	725.00	1012.4	23100.	22.817
242	725.00	977.79	23100.	23.625
798	725.00	977.65	23100.	23.628
1059	725.00	976.57	23100.	23.654
1061	725.00	974.97	23100.	23.693
235	725.00	973.14	23100.	23.738
823	725.00	972.21	23100.	23.760
584	725.00	968.51	23100.	23.851
204	725.00	967.17	23100.	23.884
3	725.00	966.73	23100.	23.895
283	725.00	965.13	23100.	23.934
951	725.00	963.59	23100.	23.973
935	725.00	963.42	23100.	23.977
570	725.00	961.25	23100.	24.031
80	725.00	960.52	23100.	24.050
1062	725.00	955.46	23100.	24.177
1060	725.00	953.94	23100.	24.215
571	725.00	922.62	23100.	25.037
81	725.00	920.88	23100.	25.085
554	725.00	914.90	23100.	25.249
54	725.00	913.43	23100.	25.289
94	725.00	906.09	23100.	25.494
110	725.00	905.72	23100.	25.505

Table 3.AA.3 (continued)

732	725.00	883.80	23100.	26.137
565	725.00	883.13	23100.	26.157
892	725.00	882.65	23100.	26.171
87	725.00	881.41	23100.	26.208
783	725.00	879.35	23100.	26.269
782	725.00	879.35	23100.	26.269
1053	725.00	876.72	23100.	26.348
1052	725.00	876.72	23100.	26.348
971	725.00	873.85	23100.	26.435
503	725.00	872.16	23100.	26.486
820	725.00	850.72	23100.	27.154
232	725.00	850.59	23100.	27.158
937	725.00	844.01	23100.	27.369
953	725.00	843.93	23100.	27.372
12	725.00	817.69	23100.	28.250
292	725.00	817.47	23100.	28.258
555	725.00	815.68	23100.	28.320
55	725.00	814.57	23100.	28.358
776	725.00	814.52	23100.	28.360
773	725.00	813.68	23100.	28.389
1024	725.00	813.50	23100.	28.396
1021	725.00	812.01	23100.	28.448
601	725.00	796.99	23100.	28.984
189	725.00	796.78	23100.	28.992
6	725.00	793.26	23100.	29.120
286	725.00	791.04	23100.	29.202
774	725.00	790.26	23100.	29.231
1022	725.00	788.66	23100.	29.290
716	725.00	771.32	23100.	29.949
908	725.00	770.23	23100.	29.991
790	725.00	746.53	23100.	30.943
1048	725.00	746.17	23100.	30.958
784	725.00	727.91	23100.	31.735
1054	725.00	726.76	23100.	31.785
248	725.00	724.41	23100.	31.888
804	725.00	724.11	23100.	31.901
108	725.00	714.11	23100.	32.348
92	725.00	713.98	23100.	32.354
21	725.00	701.23	23100.	32.942
269	725.00	699.09	23100.	33.043
237	725.00	650.44	23100.	35.515
793	725.00	649.78	23100.	35.550
556	725.00	648.90	23100.	35.599
56	725.00	648.31	23100.	35.631
797	725.00	635.29	23100.	36.361
241	725.00	635.27	23100.	36.362
238	725.00	627.40	23100.	36.819
794	725.00	626.76	23100.	36.856
4	725.00	626.37	23100.	36.879
284	725.00	625.71	23100.	36.918
781	725.00	624.98	23100.	36.961
1051	725.00	620.86	23100.	37.206
294	725.00	615.78	23100.	37.513

Table 3.AA.3 (continued)

14	725.00	614.82	23100.	37.572
952	725.00	607.50	23100.	38.025
936	725.00	607.37	23100.	38.033
20	725.00	593.84	23100.	38.899
268	725.00	593.33	23100.	38.933
775	725.00	567.14	23100.	40.731
1023	725.00	566.14	23100.	40.802
234	725.00	563.00	23100.	41.030
822	725.00	562.24	23100.	41.085
972	725.00	539.23	23100.	42.839
504	725.00	538.11	23100.	42.928
61	725.00	488.02	23100.	47.334
529	725.00	483.96	23100.	47.731
62	725.00	471.04	23100.	49.040
540	725.00	470.83	23100.	49.062
72	725.00	469.71	23100.	49.179
530	725.00	467.14	23100.	49.450
557	725.00	457.43	23100.	50.499
57	725.00	457.36	23100.	50.507
821	725.00	451.02	23100.	51.218
233	725.00	450.68	23100.	51.256
13	725.00	422.09	23100.	54.728
293	725.00	421.56	23100.	54.797
93	725.00	409.76	23100.	56.374
109	725.00	409.46	23100.	56.416
239	725.00	404.52	23100.	57.105
795	725.00	404.04	23100.	57.173
560	725.00	366.29	23100.	63.064
60	725.00	364.93	23100.	63.300
5	725.00	363.62	23100.	63.528
285	725.00	362.34	23100.	63.752
63	725.00	337.96	23100.	68.350
559	725.00	335.60	23100.	68.832
531	725.00	335.41	23100.	68.871
59	725.00	334.30	23100.	69.100
796	725.00	323.28	23100.	71.454
240	725.00	323.11	23100.	71.493
58	725.00	241.74	23100.	95.557
558	725.00	241.29	23100.	95.737
64	725.00	238.62	23100.	96.807
567	725.00	237.86	23100.	97.118
532	725.00	237.41	23100.	97.299
77	725.00	235.78	23100.	97.971
533	725.00	173.14	23100.	133.42
65	725.00	173.00	23100.	133.53
534	725.00	145.79	23100.	158.45
66	725.00	142.95	23100.	161.60

Table 3.AA.4

TITLE=
MPC-24 Structural Analysis

SUBTITLE 1 =
Component: Enclosure Vessel
SUBTITLE 2 =
Load Combination: E2 (See Table 3.1.4)
SUBTITLE 3 =
Stress Result: Primary Membrane (PM)

PRINT ELEMENT TABLE ITEMS PER ELEMENT

STAT ELEM	CURRENT REF TEMP	MIXED PM	PREVIOUS ALLOW	PREVIOUS SF
1156	450.00	6874.6	18100.	2.6329
1157	450.00	6874.6	18100.	2.6329
1155	450.00	6873.7	18100.	2.6332
1158	450.00	6873.6	18100.	2.6333
1147	450.00	6843.5	18100.	2.6449
1166	450.00	6843.2	18100.	2.6450
1232	450.00	6782.6	18100.	2.6686
1225	450.00	6782.4	18100.	2.6687
1233	450.00	6782.2	18100.	2.6687
1224	450.00	6782.0	18100.	2.6688
1234	450.00	6781.8	18100.	2.6689
1223	450.00	6781.6	18100.	2.6690
1235	450.00	6781.3	18100.	2.6691
1222	450.00	6781.0	18100.	2.6692
1236	450.00	6780.7	18100.	2.6693
1221	450.00	6780.4	18100.	2.6695
1237	450.00	6780.0	18100.	2.6696
1220	450.00	6779.7	18100.	2.6697
1238	450.00	6779.4	18100.	2.6699
1219	450.00	6779.0	18100.	2.6700
1239	450.00	6778.6	18100.	2.6702
1218	450.00	6778.2	18100.	2.6703
1240	450.00	6777.8	18100.	2.6705
1217	450.00	6777.4	18100.	2.6706
1241	450.00	6777.0	18100.	2.6708
1216	450.00	6776.5	18100.	2.6710
1242	450.00	6776.1	18100.	2.6712
1215	450.00	6775.6	18100.	2.6714
1243	450.00	6775.1	18100.	2.6715
1214	450.00	6774.6	18100.	2.6717
1119	450.00	6774.5	18100.	2.6718
1244	450.00	6774.2	18100.	2.6719
1120	450.00	6773.7	18100.	2.6721
1213	450.00	6773.6	18100.	2.6721
1193	450.00	6773.5	18100.	2.6722
1245	450.00	6773.2	18100.	2.6723
1121	450.00	6773.0	18100.	2.6724
1192	450.00	6772.8	18100.	2.6725
1212	450.00	6772.6	18100.	2.6726

Table 3.AA.4 (continued)

1122	450.00	6772.3	18100.	2.6727
1246	450.00	6772.1	18100.	2.6727
1191	450.00	6772.0	18100.	2.6728
1211	450.00	6771.9	18100.	2.6728
1190	450.00	6771.3	18100.	2.6730
1210	450.00	6771.2	18100.	2.6731
1103	450.00	6770.9	18100.	2.6732
1209	450.00	6770.2	18100.	2.6735
1104	450.00	6769.8	18100.	2.6736
1208	450.00	6769.1	18100.	2.6739
1105	450.00	6768.7	18100.	2.6741
1207	450.00	6768.0	18100.	2.6744
1106	450.00	6767.6	18100.	2.6745
1206	450.00	6766.8	18100.	2.6748
1107	450.00	6766.5	18100.	2.6750
1205	450.00	6765.7	18100.	2.6753
1108	450.00	6765.3	18100.	2.6754
1229	450.00	6765.3	18100.	2.6754
1230	450.00	6765.3	18100.	2.6754
1228	450.00	6765.3	18100.	2.6754
1231	450.00	6765.2	18100.	2.6754
1227	450.00	6765.2	18100.	2.6755
1226	450.00	6765.1	18100.	2.6755
1204	450.00	6764.6	18100.	2.6757
1109	450.00	6764.3	18100.	2.6758
1203	450.00	6763.8	18100.	2.6760
1110	450.00	6763.6	18100.	2.6761
1202	450.00	6763.1	18100.	2.6763
1111	450.00	6762.9	18100.	2.6764
1201	450.00	6762.3	18100.	2.6766
1112	450.00	6762.1	18100.	2.6767
1200	450.00	6761.2	18100.	2.6770
1113	450.00	6760.9	18100.	2.6772
1199	450.00	6760.0	18100.	2.6775
1114	450.00	6759.8	18100.	2.6776
1198	450.00	6758.9	18100.	2.6779
1115	450.00	6758.8	18100.	2.6780
1197	450.00	6757.8	18100.	2.6784
1116	450.00	6757.7	18100.	2.6784
1196	450.00	6756.8	18100.	2.6788
1117	450.00	6756.8	18100.	2.6788
1118	450.00	6755.9	18100.	2.6792
1195	450.00	6755.8	18100.	2.6792
1194	450.00	6754.9	18100.	2.6795
1148	450.00	6751.6	18100.	2.6808
1165	450.00	6751.2	18100.	2.6810
1149	450.00	6751.2	18100.	2.6810
1164	450.00	6750.9	18100.	2.6811
1150	450.00	6750.7	18100.	2.6812
1163	450.00	6750.5	18100.	2.6813
1151	450.00	6750.4	18100.	2.6813
1152	450.00	6750.3	18100.	2.6814
1153	450.00	6750.2	18100.	2.6814

Table 3.AA.4 (continued)

1162	450.00	6750.2	18100.	2.6814
1160	450.00	6750.1	18100.	2.6814
1161	450.00	6750.1	18100.	2.6814
1154	450.00	6749.9	18100.	2.6815
1159	450.00	6749.8	18100.	2.6816
1123	450.00	6748.2	18100.	2.6822
1124	450.00	6747.9	18100.	2.6823
1125	450.00	6747.6	18100.	2.6824
1129	450.00	6747.5	18100.	2.6825
1126	450.00	6747.4	18100.	2.6825
1128	450.00	6747.4	18100.	2.6825
1189	450.00	6747.4	18100.	2.6825
1127	450.00	6747.4	18100.	2.6825
1130	450.00	6747.3	18100.	2.6826
1188	450.00	6747.0	18100.	2.6827
1183	450.00	6746.7	18100.	2.6828
1187	450.00	6746.7	18100.	2.6828
1186	450.00	6746.6	18100.	2.6828
1184	450.00	6746.6	18100.	2.6828
1182	450.00	6746.5	18100.	2.6829
1185	450.00	6746.5	18100.	2.6829
1140	450.00	6744.7	18100.	2.6836
1173	450.00	6744.1	18100.	2.6838
1139	450.00	6744.1	18100.	2.6838
1141	450.00	6743.9	18100.	2.6839
1174	450.00	6743.5	18100.	2.6840
1172	450.00	6743.4	18100.	2.6841
1142	450.00	6743.3	18100.	2.6841
1143	450.00	6742.8	18100.	2.6843
1171	450.00	6742.7	18100.	2.6844
1144	450.00	6742.5	18100.	2.6845
1170	450.00	6742.3	18100.	2.6846
1145	450.00	6742.2	18100.	2.6846
1169	450.00	6741.9	18100.	2.6847
1168	450.00	6741.8	18100.	2.6847
1146	450.00	6741.1	18100.	2.6850
1167	450.00	6740.8	18100.	2.6851
1131	450.00	6740.5	18100.	2.6853
1132	450.00	6739.7	18100.	2.6856
1181	450.00	6739.6	18100.	2.6856
1133	450.00	6738.9	18100.	2.6859
1180	450.00	6738.9	18100.	2.6859
1134	450.00	6738.2	18100.	2.6862
1179	450.00	6738.1	18100.	2.6862
1135	450.00	6737.6	18100.	2.6864
1178	450.00	6737.4	18100.	2.6865
1136	450.00	6737.2	18100.	2.6866
1177	450.00	6736.9	18100.	2.6867
1137	450.00	6736.7	18100.	2.6868
1176	450.00	6736.6	18100.	2.6868
1138	450.00	6735.3	18100.	2.6873
1175	450.00	6734.9	18100.	2.6875

Table 3.AA.5

TITLE=
MPC-24 Structural Analysis

SUBTITLE 1 =
Component: Enclosure Vessel
SUBTITLE 2 =
Load Combination: E2 (See Table 3.1.4)
SUBTITLE 3 =
Stress Result: Primary Local Plus Primary Bending (PL+PB)

PRINT ELEMENT TABLE ITEMS PER ELEMENT

STAT ELEM	CURRENT REF TEMP	MIXED PL+PB	PREVIOUS ALLOW	PREVIOUS SF
1225	450.00	8732.7	27200.	3.1147
1232	450.00	8732.7	27200.	3.1147
1118	450.00	8685.7	27200.	3.1316
1117	450.00	8685.7	27200.	3.1316
1194	450.00	8685.7	27200.	3.1316
1195	450.00	8685.7	27200.	3.1316
1116	450.00	8685.5	27200.	3.1317
1196	450.00	8685.4	27200.	3.1317
1115	450.00	8659.3	27200.	3.1411
1197	450.00	8659.3	27200.	3.1411
1224	450.00	8640.9	27200.	3.1478
1233	450.00	8640.9	27200.	3.1478
1114	450.00	8609.1	27200.	3.1595
1198	450.00	8609.0	27200.	3.1595
1223	450.00	8537.2	27200.	3.1860
1234	450.00	8537.2	27200.	3.1861
1113	450.00	8536.5	27200.	3.1863
1199	450.00	8536.5	27200.	3.1863
1112	450.00	8443.6	27200.	3.2214
1200	450.00	8443.5	27200.	3.2214
1222	450.00	8422.1	27200.	3.2296
1235	450.00	8422.1	27200.	3.2296
1111	450.00	8332.1	27200.	3.2645
1201	450.00	8332.0	27200.	3.2645
1123	450.00	8318.8	27200.	3.2697
1189	450.00	8318.8	27200.	3.2697
1221	450.00	8296.2	27200.	3.2786
1236	450.00	8296.2	27200.	3.2786
1110	450.00	8241.3	27200.	3.3005
1202	450.00	8241.2	27200.	3.3005
1109	450.00	8165.5	27200.	3.3311
1203	450.00	8165.4	27200.	3.3311
1220	450.00	8160.2	27200.	3.3332
1237	450.00	8160.2	27200.	3.3333
1124	450.00	8128.6	27200.	3.3462
1188	450.00	8128.6	27200.	3.3462
1108	450.00	8085.4	27200.	3.3641
1204	450.00	8085.3	27200.	3.3641
1219	450.00	8014.8	27200.	3.3937

Table 3.AA.5 (continued)

1238	450.00	8014.8	27200.	3.3937
1119	450.00	7994.2	27200.	3.4025
1193	450.00	7994.1	27200.	3.4025
1226	450.00	7972.1	27200.	3.4119
1231	450.00	7972.0	27200.	3.4119
1227	450.00	7967.2	27200.	3.4140
1230	450.00	7967.2	27200.	3.4140
1228	450.00	7964.3	27200.	3.4152
1229	450.00	7964.3	27200.	3.4152
1107	450.00	7941.7	27200.	3.4250
1205	450.00	7941.6	27200.	3.4250
1120	450.00	7925.9	27200.	3.4318
1192	450.00	7925.9	27200.	3.4318
1125	450.00	7902.4	27200.	3.4420
1187	450.00	7902.4	27200.	3.4420
1218	450.00	7865.2	27200.	3.4583
1239	450.00	7865.2	27200.	3.4583
1121	450.00	7844.8	27200.	3.4673
1191	450.00	7844.8	27200.	3.4673
1106	450.00	7788.0	27200.	3.4926
1206	450.00	7787.9	27200.	3.4926
1122	450.00	7749.2	27200.	3.5101
1190	450.00	7749.1	27200.	3.5101
1217	450.00	7708.3	27200.	3.5287
1240	450.00	7708.3	27200.	3.5287
1126	450.00	7639.3	27200.	3.5605
1186	450.00	7639.3	27200.	3.5605
1105	450.00	7626.0	27200.	3.5667
1207	450.00	7625.9	27200.	3.5668
1156	450.00	7609.3	27200.	3.5746
1157	450.00	7609.3	27200.	3.5746
1216	450.00	7540.8	27200.	3.6071
1241	450.00	7540.8	27200.	3.6071
1176	450.00	7537.3	27200.	3.6087
1175	450.00	7536.4	27200.	3.6092
1155	450.00	7522.7	27200.	3.6157
1158	450.00	7522.6	27200.	3.6157
1173	450.00	7520.8	27200.	3.6166
1174	450.00	7519.6	27200.	3.6172
1140	450.00	7486.0	27200.	3.6334
1139	450.00	7484.8	27200.	3.6340
1137	450.00	7469.8	27200.	3.6413
1136	450.00	7469.7	27200.	3.6414
1166	450.00	7468.0	27200.	3.6422
1147	450.00	7467.3	27200.	3.6425
1104	450.00	7457.2	27200.	3.6475
1208	450.00	7457.1	27200.	3.6475
1138	450.00	7440.5	27200.	3.6557
1145	450.00	7412.8	27200.	3.6693
1146	450.00	7411.9	27200.	3.6698
1168	450.00	7407.4	27200.	3.6720
1167	450.00	7406.6	27200.	3.6724
1144	450.00	7402.0	27200.	3.6747

Table 3.AA.5 (continued)

1160	450.00	7397.5	27200.	3.6769
1153	450.00	7397.5	27200.	3.6769
1159	450.00	7397.3	27200.	3.6770
1154	450.00	7397.3	27200.	3.6770
1172	450.00	7394.4	27200.	3.6784
1169	450.00	7389.0	27200.	3.6812
1177	450.00	7388.9	27200.	3.6812
1165	450.00	7381.5	27200.	3.6849
1164	450.00	7381.4	27200.	3.6849
1148	450.00	7381.4	27200.	3.6849
1149	450.00	7381.3	27200.	3.6850
1141	450.00	7369.3	27200.	3.6910
1215	450.00	7367.7	27200.	3.6918
1242	450.00	7367.7	27200.	3.6918
1135	450.00	7341.7	27200.	3.7049
1127	450.00	7338.4	27200.	3.7066
1185	450.00	7338.3	27200.	3.7066
1143	450.00	7317.1	27200.	3.7173
1171	450.00	7317.1	27200.	3.7173
1170	450.00	7313.6	27200.	3.7191
1152	450.00	7309.0	27200.	3.7215
1161	450.00	7309.0	27200.	3.7215
1142	450.00	7301.6	27200.	3.7252
1163	450.00	7299.6	27200.	3.7262
1150	450.00	7299.6	27200.	3.7263
1132	450.00	7293.4	27200.	3.7294
1131	450.00	7293.4	27200.	3.7294
1178	450.00	7293.2	27200.	3.7295
1180	450.00	7291.3	27200.	3.7305
1181	450.00	7291.2	27200.	3.7305
1103	450.00	7283.0	27200.	3.7347
1209	450.00	7283.0	27200.	3.7347
1182	450.00	7282.4	27200.	3.7350
1130	450.00	7282.4	27200.	3.7350
1183	450.00	7281.8	27200.	3.7353
1129	450.00	7281.8	27200.	3.7353
1151	450.00	7274.1	27200.	3.7393
1162	450.00	7274.1	27200.	3.7393
1133	450.00	7270.1	27200.	3.7413
1134	450.00	7266.5	27200.	3.7432
1179	450.00	7256.0	27200.	3.7486
1214	450.00	7190.2	27200.	3.7829
1243	450.00	7190.1	27200.	3.7830
1246	450.00	7105.1	27200.	3.8282
1210	450.00	7104.9	27200.	3.8283
1213	450.00	7009.4	27200.	3.8805
1244	450.00	7009.4	27200.	3.8805
1211	450.00	7004.3	27200.	3.8834
1128	450.00	6998.8	27200.	3.8864
1184	450.00	6998.7	27200.	3.8864
1245	450.00	6901.4	27200.	3.9412
1212	450.00	6901.3	27200.	3.9413

Table 3.AA.6

TITLE=
MPC-24 Structural Analysis

SUBTITLE 1 =
Component: Basket Supports
SUBTITLE 2 =
Load Combination: E2 (See Table 3.1.4)
SUBTITLE 3 =
Stress Result: Primary Membrane (PM)

PRINT ELEMENT TABLE ITEMS PER ELEMENT

STAT ELEM	CURRENT REF TEMP	MIXED PM	PREVIOUS ALLOW	PREVIOUS SF
1084	450.00	-3079.4	18100.	5.8777
1079	450.00	-3079.4	18100.	5.8777
1085	450.00	-3079.3	18100.	5.8779
1080	450.00	-3079.3	18100.	5.8779
1081	450.00	-3078.7	18100.	5.8792
1086	450.00	-3078.7	18100.	5.8792
1087	450.00	-3078.0	18100.	5.8805
1082	450.00	-3078.0	18100.	5.8805
1083	450.00	-3077.3	18100.	5.8818
1088	450.00	-3077.3	18100.	5.8818
1102	450.00	-326.72	18100.	55.398
1099	450.00	-326.72	18100.	55.398
1101	450.00	-326.64	18100.	55.412
1098	450.00	-326.64	18100.	55.412
1100	450.00	-325.89	18100.	55.540
1097	450.00	-325.89	18100.	55.540
1096	450.00	-27.055	18100.	669.01
1074	450.00	-27.054	18100.	669.03
1095	450.00	-26.973	18100.	671.03
1073	450.00	-26.973	18100.	671.04
1094	450.00	-26.308	18100.	688.01
1072	450.00	-26.307	18100.	688.03
1093	450.00	-25.642	18100.	705.88
1071	450.00	-25.641	18100.	705.90
1089	450.00	-23.420	18100.	772.83
1075	450.00	-23.420	18100.	772.85
1090	450.00	-23.339	18100.	775.52
1076	450.00	-23.339	18100.	775.54
1091	450.00	-22.611	18100.	800.50
1077	450.00	-22.610	18100.	800.52
1092	450.00	-21.883	18100.	827.13
1078	450.00	-21.882	18100.	827.16

Table 3.AA.7

TITLE=
MPC-24 Structural Analysis

SUBTITLE 1 =
Component: Basket Supports
SUBTITLE 2 =
Load Combination: E2 (See Table 3.1.4)
SUBTITLE 3 =
Stress Result: Primary Local Plus Primary Bending (PL+PB)

PRINT ELEMENT TABLE ITEMS PER ELEMENT

STAT ELEM	CURRENT REF TEMP	MIXED PL+PB	PREVIOUS ALLOW	PREVIOUS SF
1075	450.00	3033.3	27200.	8.9672
1089	450.00	3033.3	27200.	8.9672
1071	450.00	3030.9	27200.	8.9742
1093	450.00	3030.9	27200.	8.9742
1084	450.00	3005.0	27200.	9.0515
1079	450.00	3005.0	27200.	9.0515
1101	450.00	2489.0	27200.	10.928
1098	450.00	2489.0	27200.	10.928
1102	450.00	2396.0	27200.	11.352
1099	450.00	2396.0	27200.	11.352
1085	450.00	2395.5	27200.	11.355
1080	450.00	2395.5	27200.	11.355
1072	450.00	2237.9	27200.	12.154
1094	450.00	2237.9	27200.	12.154
1076	450.00	2232.9	27200.	12.182
1090	450.00	2232.8	27200.	12.182
1083	450.00	1879.2	27200.	14.475
1088	450.00	1879.2	27200.	14.475
1096	450.00	1831.3	27200.	14.853
1074	450.00	1831.3	27200.	14.853
1082	450.00	1812.9	27200.	15.003
1087	450.00	1812.9	27200.	15.003
1086	450.00	1807.5	27200.	15.049
1081	450.00	1807.5	27200.	15.049
1092	450.00	1772.0	27200.	15.350
1078	450.00	1772.0	27200.	15.350
1095	450.00	1730.5	27200.	15.718
1073	450.00	1730.4	27200.	15.718
1091	450.00	1687.2	27200.	16.121
1077	450.00	1687.2	27200.	16.122
1097	450.00	415.84	27200.	65.410
1100	450.00	415.84	27200.	65.410

Table 3.AA.8

TITLE=
MPC-24 Structural Analysis

SUBTITLE 1 =
Component: Fuel Basket
SUBTITLE 2 =
Load Combination: F3.b (See Table 3.1.3)
SUBTITLE 3 =
Stress Result: Primary Membrane (PM)

PRINT ELEMENT TABLE ITEMS PER ELEMENT

STAT ELEM	CURRENT REF TEMP	CURRENT PM	PREVIOUS ALLOW	PREVIOUS SF
852	725.00	-13717.	36950.	2.6938
851	725.00	-13713.	36950.	2.6945
982	725.00	-13356.	36950.	2.7665
981	725.00	-13318.	36950.	2.7744
980	725.00	-13280.	36950.	2.7823
979	725.00	-13242.	36950.	2.7903
978	725.00	-13205.	36950.	2.7983
977	725.00	-13167.	36950.	2.8063
974	725.00	-12959.	36950.	2.8512
973	725.00	-12921.	36950.	2.8596
972	725.00	-12884.	36950.	2.8680
971	725.00	-12846.	36950.	2.8765
970	725.00	-12808.	36950.	2.8850
969	725.00	-12770.	36950.	2.8935
808	725.00	-12611.	36950.	2.9300
807	725.00	-12608.	36950.	2.9308
850	725.00	-12558.	36950.	2.9423
849	725.00	-12520.	36950.	2.9512
848	725.00	-12482.	36950.	2.9602
847	725.00	-12444.	36950.	2.9692
846	725.00	-12407.	36950.	2.9783
845	725.00	-12369.	36950.	2.9874
896	725.00	-12282.	36950.	3.0084
895	725.00	-12279.	36950.	3.0092
1025	725.00	-12266.	36950.	3.0125
1024	725.00	-12217.	36950.	3.0244
1023	725.00	-12186.	36950.	3.0321
1022	725.00	-12156.	36950.	3.0398
1021	725.00	-12125.	36950.	3.0475
806	725.00	-11455.	36950.	3.2257
805	725.00	-11417.	36950.	3.2364
804	725.00	-11379.	36950.	3.2471
803	725.00	-11341.	36950.	3.2580
802	725.00	-11303.	36950.	3.2689
801	725.00	-11266.	36950.	3.2799
894	725.00	-11114.	36950.	3.3245
893	725.00	-11077.	36950.	3.3359
892	725.00	-11039.	36950.	3.3473
891	725.00	-11001.	36950.	3.3589

Table 3.AA.8 (continued)

632	725.00	-10973.	36950.	3.3672
631	725.00	-10970.	36950.	3.3683
890	725.00	-10963.	36950.	3.3705
889	725.00	-10925.	36950.	3.3822
588	725.00	-9844.4	36950.	3.7534
587	725.00	-9840.9	36950.	3.7547
630	725.00	-9786.3	36950.	3.7757
629	725.00	-9748.4	36950.	3.7904
628	725.00	-9710.5	36950.	3.8051
627	725.00	-9672.6	36950.	3.8201
626	725.00	-9634.7	36950.	3.8351
625	725.00	-9596.8	36950.	3.8502
676	725.00	-9527.9	36950.	3.8781
675	725.00	-9524.4	36950.	3.8795
800	725.00	-8889.5	36950.	4.1566
799	725.00	-8886.0	36950.	4.1582
586	725.00	-8667.7	36950.	4.2629
585	725.00	-8629.8	36950.	4.2817
584	725.00	-8591.9	36950.	4.3006
583	725.00	-8554.0	36950.	4.3196
582	725.00	-8516.1	36950.	4.3388
581	725.00	-8478.2	36950.	4.3582
674	725.00	-8329.8	36950.	4.4359
673	725.00	-8291.9	36950.	4.4562
672	725.00	-8254.0	36950.	4.4766
368	725.00	-8230.0	36950.	4.4897
367	725.00	-8226.6	36950.	4.4915
671	725.00	-8216.1	36950.	4.4973
670	725.00	-8178.2	36950.	4.5181
669	725.00	-8140.3	36950.	4.5391
940	725.00	-7885.1	36950.	4.6860
939	725.00	-7881.7	36950.	4.6881
938	725.00	-7855.0	36950.	4.7040
937	725.00	-7824.2	36950.	4.7225
936	725.00	-7793.4	36950.	4.7412
935	725.00	-7762.6	36950.	4.7600
798	725.00	-7750.1	36950.	4.7677
934	725.00	-7731.7	36950.	4.7790
797	725.00	-7712.2	36950.	4.7911
933	725.00	-7700.9	36950.	4.7981
796	725.00	-7674.3	36950.	4.8148
795	725.00	-7636.4	36950.	4.8387
794	725.00	-7598.5	36950.	4.8628
793	725.00	-7560.6	36950.	4.8872
544	725.00	-7172.5	36950.	5.1516
543	725.00	-7169.0	36950.	5.1541
324	725.00	-7116.6	36950.	5.1921
323	725.00	-7113.1	36950.	5.1946
366	725.00	-7041.2	36950.	5.2477
365	725.00	-7003.3	36950.	5.2761
364	725.00	-6965.4	36950.	5.3048
363	725.00	-6927.5	36950.	5.3338
362	725.00	-6889.6	36950.	5.3632

Table 3.AA.8 (continued)

361	725.00	-6851.7	36950.	5.3928
412	725.00	-6762.8	36950.	5.4637
411	725.00	-6759.4	36950.	5.4665
720	725.00	-6380.2	36950.	5.7914
719	725.00	-6376.7	36950.	5.7945
542	725.00	-6007.3	36950.	6.1509
541	725.00	-5969.4	36950.	6.1899
322	725.00	-5936.0	36950.	6.2247
540	725.00	-5931.5	36950.	6.2295
321	725.00	-5898.1	36950.	6.2647
539	725.00	-5893.6	36950.	6.2696
320	725.00	-5860.2	36950.	6.3052
538	725.00	-5855.7	36950.	6.3101
319	725.00	-5822.3	36950.	6.3462
537	725.00	-5817.8	36950.	6.3512
318	725.00	-5784.4	36950.	6.3878
317	725.00	-5746.5	36950.	6.4300
410	725.00	-5563.9	36950.	6.6410
409	725.00	-5526.0	36950.	6.6865
148	725.00	-5491.8	36950.	6.7282
147	725.00	-5488.4	36950.	6.7324
408	725.00	-5488.1	36950.	6.7327
407	725.00	-5450.2	36950.	6.7795
406	725.00	-5412.3	36950.	6.8270
405	725.00	-5374.4	36950.	6.8751
718	725.00	-5295.8	36950.	6.9773
717	725.00	-5257.9	36950.	7.0276
716	725.00	-5219.9	36950.	7.0786
715	725.00	-5182.0	36950.	7.1304
714	725.00	-5144.1	36950.	7.1829
713	725.00	-5106.2	36950.	7.2362
104	725.00	-4389.1	36950.	8.4186
103	725.00	-4385.6	36950.	8.4252
280	725.00	-4369.6	36950.	8.4561
279	725.00	-4366.2	36950.	8.4628
146	725.00	-4290.4	36950.	8.6123
145	725.00	-4252.5	36950.	8.6891
144	725.00	-4214.6	36950.	8.7672
143	725.00	-4176.7	36950.	8.8468
142	725.00	-4138.8	36950.	8.9278
141	725.00	-4100.9	36950.	9.0103
192	725.00	-4001.4	36950.	9.2343
191	725.00	-3997.9	36950.	9.2423
456	725.00	-3808.2	36950.	9.7027
455	725.00	-3804.8	36950.	9.7114
102	725.00	-3198.0	36950.	11.554
278	725.00	-3193.4	36950.	11.571
101	725.00	-3160.1	36950.	11.692
277	725.00	-3155.5	36950.	11.710
100	725.00	-3122.2	36950.	11.834
276	725.00	-3117.6	36950.	11.852
99	725.00	-3084.3	36950.	11.980
275	725.00	-3079.7	36950.	11.998

Table 3.AA.8 (continued)

98	725.00	-3046.4	36950.	12.129
274	725.00	-3041.8	36950.	12.147
97	725.00	-3008.5	36950.	12.282
273	725.00	-3003.9	36950.	12.301
190	725.00	-2793.0	36950.	13.230
189	725.00	-2755.1	36950.	13.412
16	725.00	-2741.4	36950.	13.478
15	725.00	-2738.0	36950.	13.495
188	725.00	-2717.2	36950.	13.599
187	725.00	-2679.3	36950.	13.791
454	725.00	-2673.3	36950.	13.822
186	725.00	-2641.4	36950.	13.989
453	725.00	-2635.4	36950.	14.021
185	725.00	-2603.5	36950.	14.193
452	725.00	-2597.5	36950.	14.225
451	725.00	-2559.6	36950.	14.436
450	725.00	-2521.7	36950.	14.653
449	725.00	-2483.8	36950.	14.877
534	725.00	-1976.2	36950.	18.698
533	725.00	-1938.3	36950.	19.063
532	725.00	-1900.4	36950.	19.444
531	725.00	-1862.5	36950.	19.839
530	725.00	-1824.6	36950.	20.251
529	725.00	-1786.7	36950.	20.681
8	725.00	-1647.1	36950.	22.433
7	725.00	-1643.6	36950.	22.480
96	725.00	-1583.1	36950.	23.340
95	725.00	-1579.7	36950.	23.391
786	725.00	-1542.2	36950.	23.959
14	725.00	-1525.5	36950.	24.222
785	725.00	-1503.5	36950.	24.576
13	725.00	-1487.6	36950.	24.839
272	725.00	-1485.7	36950.	24.870
271	725.00	-1482.3	36950.	24.928
784	725.00	-1464.8	36950.	25.225
12	725.00	-1449.7	36950.	25.488
1050	725.00	-1427.8	36950.	25.879
783	725.00	-1426.1	36950.	25.909
11	725.00	-1411.8	36950.	26.172
782	725.00	-1387.4	36950.	26.632
10	725.00	-1373.9	36950.	26.894
781	725.00	-1348.8	36950.	27.396
9	725.00	-1336.0	36950.	27.657
825	725.00	1297.3	36950.	28.482
297	725.00	1295.5	36950.	28.521
826	725.00	1293.0	36950.	28.577
298	725.00	1291.2	36950.	28.617
869	725.00	1279.0	36950.	28.890
913	725.00	1276.0	36950.	28.958
870	725.00	1274.7	36950.	28.988
914	725.00	1271.7	36950.	29.056
605	725.00	1268.6	36950.	29.126
561	725.00	1266.7	36950.	29.170

Table 3.AA.8 (continued)

957	725.00	1265.7	36950.	29.193
606	725.00	1264.3	36950.	29.225
562	725.00	1262.4	36950.	29.270
958	725.00	1261.4	36950.	29.293
341	725.00	1256.4	36950.	29.409
649	725.00	1255.9	36950.	29.421
827	725.00	1254.3	36950.	29.459
299	725.00	1252.5	36950.	29.501
342	725.00	1252.1	36950.	29.511
385	725.00	1251.6	36950.	29.522
650	725.00	1251.6	36950.	29.522
386	725.00	1247.3	36950.	29.624
693	725.00	1244.3	36950.	29.695
429	725.00	1242.4	36950.	29.740
121	725.00	1240.2	36950.	29.793
694	725.00	1240.0	36950.	29.799
165	725.00	1240.0	36950.	29.799
430	725.00	1238.1	36950.	29.844
871	725.00	1236.0	36950.	29.895
122	725.00	1235.9	36950.	29.897
166	725.00	1235.6	36950.	29.904
915	725.00	1233.0	36950.	29.968
737	725.00	1232.1	36950.	29.989
473	725.00	1231.3	36950.	30.010
209	725.00	1228.3	36950.	30.081
738	725.00	1227.8	36950.	30.094
474	725.00	1226.9	36950.	30.116
607	725.00	1225.6	36950.	30.148
210	725.00	1224.0	36950.	30.187
563	725.00	1223.7	36950.	30.195
959	725.00	1222.7	36950.	30.220
253	725.00	1220.7	36950.	30.270
254	725.00	1216.4	36950.	30.377
828	725.00	1215.6	36950.	30.397
300	725.00	1213.8	36950.	30.441
343	725.00	1213.4	36950.	30.452
651	725.00	1212.9	36950.	30.464
1058	725.00	-1210.1	36950.	30.534
387	725.00	1208.6	36950.	30.572
33	725.00	1203.9	36950.	30.692
695	725.00	1201.3	36950.	30.758
34	725.00	1199.9	36950.	30.793
431	725.00	1199.4	36950.	30.807
236	725.00	-1198.7	36950.	30.824
872	725.00	1197.3	36950.	30.862
123	725.00	1197.2	36950.	30.863
167	725.00	1197.0	36950.	30.870
78	725.00	1195.6	36950.	30.906
235	725.00	-1195.3	36950.	30.913
916	725.00	1194.3	36950.	30.939
60	725.00	-1193.2	36950.	30.968
59	725.00	-1189.7	36950.	31.058
739	725.00	1189.1	36950.	31.073

Table 3.AA.8 (continued)

475	725.00	1188.2	36950.	31.097
608	725.00	1186.9	36950.	31.131
211	725.00	1185.3	36950.	31.173
564	725.00	1185.0	36950.	31.181
960	725.00	1184.0	36950.	31.207
255	725.00	1177.7	36950.	31.375
829	725.00	1176.9	36950.	31.396
301	725.00	1175.1	36950.	31.443
344	725.00	1174.7	36950.	31.455
652	725.00	1174.2	36950.	31.468
388	725.00	1169.9	36950.	31.583
79	725.00	1169.3	36950.	31.601
234	725.00	-1168.6	36950.	31.618
58	725.00	-1163.0	36950.	31.770
696	725.00	1162.6	36950.	31.782
35	725.00	1161.2	36950.	31.819
432	725.00	1160.7	36950.	31.834
873	725.00	1158.6	36950.	31.892
124	725.00	1158.5	36950.	31.894
168	725.00	1158.3	36950.	31.901
917	725.00	1155.6	36950.	31.974
740	725.00	1150.4	36950.	32.118
476	725.00	1149.5	36950.	32.143
609	725.00	1148.2	36950.	32.180
212	725.00	1146.6	36950.	32.224
565	725.00	1146.3	36950.	32.233
961	725.00	1145.3	36950.	32.261
256	725.00	1139.0	36950.	32.441
830	725.00	1138.2	36950.	32.463
233	725.00	-1137.8	36950.	32.475
302	725.00	1136.5	36950.	32.513
345	725.00	1136.0	36950.	32.526
653	725.00	1135.5	36950.	32.540
57	725.00	-1132.2	36950.	32.635
389	725.00	1131.2	36950.	32.663
80	725.00	1130.6	36950.	32.682
697	725.00	1123.9	36950.	32.876
36	725.00	1122.6	36950.	32.916
433	725.00	1122.0	36950.	32.932
874	725.00	1119.9	36950.	32.994
125	725.00	1119.9	36950.	32.995
169	725.00	1119.6	36950.	33.004
918	725.00	1116.9	36950.	33.082
741	725.00	1111.7	36950.	33.236
477	725.00	1110.9	36950.	33.263
610	725.00	1109.6	36950.	33.302
213	725.00	1108.0	36950.	33.350
566	725.00	1107.6	36950.	33.359
232	725.00	-1107.0	36950.	33.379
962	725.00	1106.7	36950.	33.389
56	725.00	-1101.4	36950.	33.548
257	725.00	1100.3	36950.	33.582
346	725.00	1097.3	36950.	33.672

Table 3.AA.8 (continued)

654	725.00	1096.8	36950.	33.687
390	725.00	1092.6	36950.	33.820
81	725.00	1091.9	36950.	33.840
698	725.00	1085.2	36950.	34.048
37	725.00	1083.9	36950.	34.091
434	725.00	1083.3	36950.	34.108
126	725.00	1081.2	36950.	34.176
170	725.00	1080.9	36950.	34.185
231	725.00	-1076.2	36950.	34.334
742	725.00	1073.1	36950.	34.434
478	725.00	1072.2	36950.	34.463
55	725.00	-1070.6	36950.	34.513
214	725.00	1069.3	36950.	34.556
258	725.00	1061.6	36950.	34.805
82	725.00	1053.2	36950.	35.083
230	725.00	-1045.4	36950.	35.346
38	725.00	1045.2	36950.	35.353
54	725.00	-1039.8	36950.	35.536
1006	725.00	-1026.7	36950.	35.990
229	725.00	-1014.6	36950.	36.420
1005	725.00	-988.00	36950.	37.399
1004	725.00	-949.31	36950.	38.923
1003	725.00	-910.62	36950.	40.577
1002	725.00	-871.93	36950.	42.377
1001	725.00	-833.25	36950.	44.345
1049	725.00	-746.01	36950.	49.530
1048	725.00	-685.03	36950.	53.939
787	725.00	-655.40	36950.	56.378
791	725.00	-655.40	36950.	56.378
789	725.00	-655.40	36950.	56.378
788	725.00	-655.40	36950.	56.378
790	725.00	-655.40	36950.	56.378
1047	725.00	-646.34	36950.	57.168
525	725.00	-615.60	36950.	60.023
527	725.00	-615.60	36950.	60.023
524	725.00	-615.60	36950.	60.023
528	725.00	-615.60	36950.	60.023
526	725.00	-615.60	36950.	60.023
523	725.00	-615.60	36950.	60.023
776	725.00	610.84	36950.	60.491
773	725.00	610.84	36950.	60.491
774	725.00	610.84	36950.	60.491
777	725.00	610.84	36950.	60.491
775	725.00	610.84	36950.	60.491
1046	725.00	-607.65	36950.	60.808
1045	725.00	-568.96	36950.	64.943
512	725.00	528.88	36950.	69.864
510	725.00	528.88	36950.	69.864
513	725.00	528.88	36950.	69.864
511	725.00	528.88	36950.	69.864
514	725.00	528.88	36950.	69.864
509	725.00	528.88	36950.	69.864
6	725.00	-423.92	36950.	87.163

Table 3.AA.8 (continued)

94	725.00	-392.36	36950.	94.175
270	725.00	-387.00	36950.	95.478
5	725.00	-386.02	36950.	95.721
93	725.00	-354.46	36950.	104.24
269	725.00	-349.10	36950.	105.84
4	725.00	-348.12	36950.	106.14
92	725.00	-316.55	36950.	116.73
268	725.00	-311.20	36950.	118.73
3	725.00	-310.22	36950.	119.11
91	725.00	-278.65	36950.	132.60
267	725.00	-273.30	36950.	135.20
2	725.00	-272.32	36950.	135.69
90	725.00	-240.75	36950.	153.48
266	725.00	-235.40	36950.	156.97
1	725.00	-234.42	36950.	157.63
61	725.00	-226.43	36950.	163.19
66	725.00	-226.43	36950.	163.19
64	725.00	-226.43	36950.	163.19
63	725.00	-226.43	36950.	163.19
62	725.00	-226.43	36950.	163.19
65	725.00	-226.43	36950.	163.19
289	725.00	-213.22	36950.	173.30
293	725.00	-213.22	36950.	173.30
291	725.00	-213.22	36950.	173.30
294	725.00	-213.22	36950.	173.30
292	725.00	-213.22	36950.	173.30
290	725.00	-213.22	36950.	173.30
338	725.00	-211.29	36950.	174.88
334	725.00	-211.29	36950.	174.88
335	725.00	-211.29	36950.	174.88
336	725.00	-211.29	36950.	174.88
337	725.00	-211.29	36950.	174.88
333	725.00	-211.29	36950.	174.88
567	725.00	209.18	36950.	176.64
17	725.00	-207.65	36950.	177.94
21	725.00	-207.65	36950.	177.94
19	725.00	-207.65	36950.	177.94
22	725.00	-207.65	36950.	177.94
18	725.00	-207.65	36950.	177.94
20	725.00	-207.65	36950.	177.94
522	725.00	-207.62	36950.	177.97
89	725.00	-202.85	36950.	182.15
265	725.00	-197.50	36950.	187.09
381	725.00	-195.66	36950.	188.85
378	725.00	-195.66	36950.	188.85
377	725.00	-195.66	36950.	188.85
382	725.00	-195.66	36950.	188.85
379	725.00	-195.66	36950.	188.85
380	725.00	-195.66	36950.	188.85
730	725.00	-194.50	36950.	189.97
731	725.00	-194.50	36950.	189.97
734	725.00	-194.50	36950.	189.97
733	725.00	-194.50	36950.	189.97

Table 3.AA.8 (continued)

732	725.00	-194.50	36950.	189.97
729	725.00	-194.50	36950.	189.97
241	725.00	-192.55	36950.	191.90
239	725.00	-192.55	36950.	191.90
242	725.00	-192.55	36950.	191.90
240	725.00	-192.55	36950.	191.90
238	725.00	-192.55	36950.	191.90
237	725.00	-192.55	36950.	191.90
834	725.00	185.27	36950.	199.44
831	725.00	185.27	36950.	199.44
835	725.00	185.27	36950.	199.44
833	725.00	185.27	36950.	199.44
836	725.00	185.27	36950.	199.44
832	725.00	185.27	36950.	199.44
597	725.00	-180.61	36950.	204.58
598	725.00	-180.61	36950.	204.58
600	725.00	-180.61	36950.	204.58
602	725.00	-180.61	36950.	204.58
599	725.00	-180.61	36950.	204.58
601	725.00	-180.61	36950.	204.58
306	725.00	178.96	36950.	206.47
304	725.00	178.96	36950.	206.47
308	725.00	178.96	36950.	206.47
305	725.00	178.96	36950.	206.47
307	725.00	178.96	36950.	206.47
303	725.00	178.96	36950.	206.47
568	725.00	178.17	36950.	207.39
572	725.00	178.17	36950.	207.39
569	725.00	178.17	36950.	207.39
570	725.00	178.17	36950.	207.39
571	725.00	178.17	36950.	207.39
875	725.00	178.16	36950.	207.40
878	725.00	178.16	36950.	207.40
876	725.00	178.16	36950.	207.40
879	725.00	178.16	36950.	207.40
877	725.00	178.16	36950.	207.40
880	725.00	178.16	36950.	207.40
421	725.00	-176.18	36950.	209.72
426	725.00	-176.18	36950.	209.72
422	725.00	-176.18	36950.	209.72
424	725.00	-176.18	36950.	209.72
425	725.00	-176.18	36950.	209.72
423	725.00	-176.18	36950.	209.72
521	725.00	-168.93	36950.	218.73
685	725.00	-166.54	36950.	221.87
690	725.00	-166.54	36950.	221.87
688	725.00	-166.54	36950.	221.87
686	725.00	-166.54	36950.	221.87
689	725.00	-166.54	36950.	221.87
687	725.00	-166.54	36950.	221.87
611	725.00	164.69	36950.	224.36
615	725.00	164.69	36950.	224.36
613	725.00	164.69	36950.	224.36

Table 3.AA.8 (continued)

616	725.00	164.69	36950.	224.36
614	725.00	164.69	36950.	224.36
612	725.00	164.69	36950.	224.36
919	725.00	162.12	36950.	227.92
923	725.00	162.12	36950.	227.92
921	725.00	162.12	36950.	227.92
924	725.00	162.12	36950.	227.92
920	725.00	162.12	36950.	227.92
922	725.00	162.12	36950.	227.92
347	725.00	160.59	36950.	230.08
352	725.00	160.59	36950.	230.08
348	725.00	160.59	36950.	230.08
349	725.00	160.59	36950.	230.08
350	725.00	160.59	36950.	230.08
351	725.00	160.59	36950.	230.08
657	725.00	160.36	36950.	230.42
658	725.00	160.36	36950.	230.42
660	725.00	160.36	36950.	230.42
659	725.00	160.36	36950.	230.42
656	725.00	160.36	36950.	230.42
655	725.00	160.36	36950.	230.42
466	725.00	-159.57	36950.	231.56
465	725.00	-159.57	36950.	231.56
469	725.00	-159.57	36950.	231.56
468	725.00	-159.57	36950.	231.56
467	725.00	-159.57	36950.	231.56
470	725.00	-159.57	36950.	231.56
391	725.00	155.30	36950.	237.92
393	725.00	155.30	36950.	237.92
396	725.00	155.30	36950.	237.92
394	725.00	155.30	36950.	237.92
395	725.00	155.30	36950.	237.92
392	725.00	155.30	36950.	237.92
642	725.00	-153.71	36950.	240.38
645	725.00	-153.71	36950.	240.38
644	725.00	-153.71	36950.	240.38
646	725.00	-153.71	36950.	240.38
643	725.00	-153.71	36950.	240.38
641	725.00	-153.71	36950.	240.38
963	725.00	152.13	36950.	242.88
968	725.00	152.13	36950.	242.88
967	725.00	152.13	36950.	242.88
966	725.00	152.13	36950.	242.88
965	725.00	152.13	36950.	242.88
964	725.00	152.13	36950.	242.88
130	725.00	149.70	36950.	246.83
131	725.00	149.70	36950.	246.83
132	725.00	149.70	36950.	246.83
128	725.00	149.70	36950.	246.83
129	725.00	149.70	36950.	246.83
127	725.00	149.70	36950.	246.83
105	725.00	-148.99	36950.	248.01
109	725.00	-148.99	36950.	248.01

Table 3.AA.8 (continued)

106	725.00	-148.99	36950.	248.01
108	725.00	-148.99	36950.	248.01
110	725.00	-148.99	36950.	248.01
107	725.00	-148.99	36950.	248.01
699	725.00	148.51	36950.	248.81
703	725.00	148.51	36950.	248.81
700	725.00	148.51	36950.	248.81
702	725.00	148.51	36950.	248.81
704	725.00	148.51	36950.	248.81
701	725.00	148.51	36950.	248.81
435	725.00	144.28	36950.	256.11
438	725.00	144.28	36950.	256.11
437	725.00	144.28	36950.	256.11
439	725.00	144.28	36950.	256.11
440	725.00	144.28	36950.	256.11
436	725.00	144.28	36950.	256.11
85	725.00	143.93	36950.	256.71
88	725.00	143.93	36950.	256.71
87	725.00	143.93	36950.	256.71
84	725.00	143.93	36950.	256.71
86	725.00	143.93	36950.	256.71
83	725.00	143.93	36950.	256.71
744	725.00	143.48	36950.	257.53
745	725.00	143.48	36950.	257.53
747	725.00	143.48	36950.	257.53
748	725.00	143.48	36950.	257.53
746	725.00	143.48	36950.	257.53
743	725.00	143.48	36950.	257.53
483	725.00	140.89	36950.	262.25
481	725.00	140.89	36950.	262.25
484	725.00	140.89	36950.	262.25
482	725.00	140.89	36950.	262.25
480	725.00	140.89	36950.	262.25
479	725.00	140.89	36950.	262.25
171	725.00	139.01	36950.	265.81
174	725.00	139.01	36950.	265.81
175	725.00	139.01	36950.	265.81
172	725.00	139.01	36950.	265.81
176	725.00	139.01	36950.	265.81
173	725.00	139.01	36950.	265.81
217	725.00	137.72	36950.	268.30
220	725.00	137.72	36950.	268.30
218	725.00	137.72	36950.	268.30
219	725.00	137.72	36950.	268.30
216	725.00	137.72	36950.	268.30
215	725.00	137.72	36950.	268.30
285	725.00	-134.31	36950.	275.11
283	725.00	-134.31	36950.	275.11
284	725.00	-134.31	36950.	275.11
282	725.00	-134.31	36950.	275.11
286	725.00	-134.31	36950.	275.11
281	725.00	-134.31	36950.	275.11
259	725.00	133.80	36950.	276.16

Table 3.AA.8 (continued)

262	725.00	133.80	36950.	276.16
264	725.00	133.80	36950.	276.16
263	725.00	133.80	36950.	276.16
260	725.00	133.80	36950.	276.16
261	725.00	133.80	36950.	276.16
207	725.00	130.32	36950.	283.53
208	725.00	130.32	36950.	283.53
41	725.00	130.29	36950.	283.60
40	725.00	130.29	36950.	283.60
42	725.00	130.29	36950.	283.60
43	725.00	130.29	36950.	283.60
39	725.00	130.29	36950.	283.60
44	725.00	130.29	36950.	283.60
520	725.00	-130.24	36950.	283.70
252	725.00	127.48	36950.	289.84
251	725.00	127.48	36950.	289.84
77	725.00	113.35	36950.	325.97
865	725.00	-108.27	36950.	341.28
863	725.00	-108.27	36950.	341.28
862	725.00	-108.27	36950.	341.28
864	725.00	-108.27	36950.	341.28
866	725.00	-108.27	36950.	341.28
861	725.00	-108.27	36950.	341.28
164	725.00	102.76	36950.	359.57
163	725.00	102.76	36950.	359.57
69	725.00	-100.40	36950.	368.02
70	725.00	-100.40	36950.	368.02
73	725.00	-100.40	36950.	368.02
72	725.00	-100.40	36950.	368.02
71	725.00	-100.40	36950.	368.02
74	725.00	-100.40	36950.	368.02
519	725.00	-91.554	36950.	403.59
1007	725.00	86.178	36950.	428.76
1008	725.00	86.178	36950.	428.76
1009	725.00	86.178	36950.	428.76
1010	725.00	86.178	36950.	428.76
1011	725.00	86.178	36950.	428.76
1012	725.00	86.178	36950.	428.76
119	725.00	81.204	36950.	455.03
120	725.00	81.204	36950.	455.03
25	725.00	-77.331	36950.	477.81
26	725.00	-77.331	36950.	477.81
30	725.00	-77.331	36950.	477.81
29	725.00	-77.331	36950.	477.81
28	725.00	-77.331	36950.	477.81
27	725.00	-77.331	36950.	477.81
1060	725.00	-75.143	36950.	491.73
905	725.00	-73.291	36950.	504.16
906	725.00	-73.291	36950.	504.16
908	725.00	-73.291	36950.	504.16
910	725.00	-73.291	36950.	504.16
909	725.00	-73.291	36950.	504.16
907	725.00	-73.291	36950.	504.16

Table 3.AA.8 (continued)

243	725.00	-73.030	36950.	505.95
244	725.00	-73.030	36950.	505.95
24	725.00	-70.525	36950.	523.93
23	725.00	-70.525	36950.	523.93
1055	725.00	69.247	36950.	533.59
1056	725.00	69.247	36950.	533.59
1053	725.00	69.247	36950.	533.59
1054	725.00	69.247	36950.	533.59
1051	725.00	69.247	36950.	533.59
1052	725.00	69.247	36950.	533.59
340	725.00	-63.961	36950.	577.70
339	725.00	-63.961	36950.	577.70
118	725.00	-63.430	36950.	582.53
114	725.00	-63.430	36950.	582.53
116	725.00	-63.430	36950.	582.53
115	725.00	-63.430	36950.	582.53
117	725.00	-63.430	36950.	582.53
113	725.00	-63.430	36950.	582.53
735	725.00	-58.480	36950.	631.84
736	725.00	-58.480	36950.	631.84
296	725.00	-53.766	36950.	687.24
295	725.00	-53.766	36950.	687.24
518	725.00	-52.866	36950.	698.94
384	725.00	-52.237	36950.	707.35
383	725.00	-52.237	36950.	707.35
32	725.00	47.875	36950.	771.81
31	725.00	47.875	36950.	771.81
1062	725.00	-45.318	36950.	815.35
428	725.00	-43.427	36950.	850.84
427	725.00	-43.427	36950.	850.84
1059	725.00	-39.696	36950.	930.82
949	725.00	37.366	36950.	988.88
950	725.00	37.366	36950.	988.88
953	725.00	37.366	36950.	988.88
952	725.00	37.366	36950.	988.88
954	725.00	37.366	36950.	988.88
955	725.00	37.366	36950.	988.88
951	725.00	37.366	36950.	988.88
956	725.00	37.366	36950.	988.88
157	725.00	-37.113	36950.	995.62
159	725.00	-37.113	36950.	995.62
160	725.00	-37.113	36950.	995.62
162	725.00	-37.113	36950.	995.62
161	725.00	-37.113	36950.	995.62
158	725.00	-37.113	36950.	995.62
471	725.00	-31.337	36950.	1179.1
472	725.00	-31.337	36950.	1179.1
868	725.00	-30.625	36950.	1206.5
867	725.00	-30.625	36950.	1206.5
560	725.00	28.912	36950.	1278.0
554	725.00	28.912	36950.	1278.0
555	725.00	28.912	36950.	1278.0
559	725.00	28.912	36950.	1278.0

Table 3.AA.8 (continued)

556	725.00	28.912	36950.	1278.0
557	725.00	28.912	36950.	1278.0
558	725.00	28.912	36950.	1278.0
288	725.00	26.853	36950.	1376.0
287	725.00	26.853	36950.	1376.0
75	725.00	23.644	36950.	1562.8
76	725.00	23.644	36950.	1562.8
792	725.00	23.199	36950.	1592.8
692	725.00	-21.528	36950.	1716.4
691	725.00	-21.528	36950.	1716.4
1061	725.00	-16.507	36950.	2238.4
112	725.00	-15.159	36950.	2437.5
111	725.00	-15.159	36950.	2437.5
604	725.00	-14.772	36950.	2501.4
603	725.00	-14.772	36950.	2501.4
817	725.00	14.688	36950.	2515.7
822	725.00	14.688	36950.	2515.7
819	725.00	14.688	36950.	2515.7
820	725.00	14.688	36950.	2515.7
823	725.00	14.688	36950.	2515.7
818	725.00	14.688	36950.	2515.7
821	725.00	14.688	36950.	2515.7
824	725.00	14.688	36950.	2515.7
517	725.00	-14.178	36950.	2606.2
501	725.00	7.1760	36950.	5149.1
502	725.00	7.1760	36950.	5149.1
503	725.00	7.1760	36950.	5149.1
504	725.00	7.1760	36950.	5149.1
505	725.00	7.1760	36950.	5149.1
506	725.00	7.1760	36950.	5149.1
647	725.00	6.7331	36950.	5487.8
648	725.00	6.7331	36950.	5487.8
911	725.00	5.6389	36950.	6552.7
912	725.00	5.6389	36950.	6552.7
245	725.00	1.5773	36950.	23426.
246	725.00	1.5773	36950.	23426.
247	725.00	1.5773	36950.	23426.
248	725.00	1.5773	36950.	23426.
249	725.00	1.5773	36950.	23426.
250	725.00	1.5773	36950.	23426.
201	725.00	1.3750	36950.	26873.
202	725.00	1.3750	36950.	26873.
203	725.00	1.3750	36950.	26873.
204	725.00	1.3750	36950.	26873.
205	725.00	1.3750	36950.	26873.
206	725.00	1.3750	36950.	26873.
1057	725.00	-.98254	36950.	37607.

Table 3.AA.9

TITLE=
MPC-24 Structural Analysis

SUBTITLE 1 =
Component: Fuel Basket
SUBTITLE 2 =
Load Combination: F3.b (See Table 3.1.3)
SUBTITLE 3 =
Stress Result: Primary Local Plus Primary Bending (PL+PB)

PRINT ELEMENT TABLE ITEMS PER ELEMENT

STAT ELEM	CURRENT REF TEMP	CURRENT PL+PB	PREVIOUS ALLOW	PREVIOUS SF
1012	725.00	47060.	55450.	1.1783
39	725.00	46011.	55450.	1.2052
83	725.00	44643.	55450.	1.2421
259	725.00	43819.	55450.	1.2654
215	725.00	43230.	55450.	1.2827
743	725.00	42944.	55450.	1.2912
479	725.00	42910.	55450.	1.2922
127	725.00	42178.	55450.	1.3147
171	725.00	41748.	55450.	1.3282
435	725.00	41637.	55450.	1.3317
699	725.00	41570.	55450.	1.3339
523	725.00	40990.	55450.	1.3528
391	725.00	40761.	55450.	1.3604
40	725.00	40521.	55450.	1.3684
347	725.00	40405.	55450.	1.3724
655	725.00	40396.	55450.	1.3727
84	725.00	39188.	55450.	1.4150
611	725.00	38607.	55450.	1.4363
260	725.00	38399.	55450.	1.4440
963	725.00	37871.	55450.	1.4642
216	725.00	37842.	55450.	1.4653
787	725.00	37811.	55450.	1.4665
875	725.00	37624.	55450.	1.4738
744	725.00	37572.	55450.	1.4758
480	725.00	37535.	55450.	1.4773
919	725.00	36969.	55450.	1.4999
128	725.00	36841.	55450.	1.5051
172	725.00	36410.	55450.	1.5230
436	725.00	36309.	55450.	1.5272
700	725.00	36249.	55450.	1.5297
524	725.00	35914.	55450.	1.5439
392	725.00	35472.	55450.	1.5632
348	725.00	35136.	55450.	1.5782
656	725.00	35125.	55450.	1.5787
1050	725.00	35095.	55450.	1.5800
831	725.00	34891.	55450.	1.5892
303	725.00	34467.	55450.	1.6088
1056	725.00	33737.	55450.	1.6436
612	725.00	33389.	55450.	1.6607

Table 3.AA.9 (continued)

788	725.00	32973.	55450.	1.6817
964	725.00	32641.	55450.	1.6988
876	725.00	32450.	55450.	1.7088
894	725.00	32406.	55450.	1.7111
850	725.00	32069.	55450.	1.7291
920	725.00	31783.	55450.	1.7446
632	725.00	30308.	55450.	1.8296
631	725.00	30276.	55450.	1.8315
1051	725.00	30235.	55450.	1.8340
808	725.00	30124.	55450.	1.8407
807	725.00	29948.	55450.	1.8515
719	725.00	29848.	55450.	1.8577
832	725.00	29795.	55450.	1.8611
304	725.00	29774.	55450.	1.8624
588	725.00	29355.	55450.	1.8889
455	725.00	29270.	55450.	1.8944
587	725.00	29258.	55450.	1.8952
1057	725.00	29088.	55450.	1.9063
528	725.00	29016.	55450.	1.9110
675	725.00	28605.	55450.	1.9385
676	725.00	28300.	55450.	1.9594
798	725.00	27636.	55450.	2.0065
967	725.00	27593.	55450.	2.0095
966	725.00	27593.	55450.	2.0095
923	725.00	27308.	55450.	2.0305
922	725.00	27308.	55450.	2.0305
306	725.00	27139.	55450.	2.0432
307	725.00	27139.	55450.	2.0432
87	725.00	27083.	55450.	2.0474
86	725.00	27083.	55450.	2.0474
834	725.00	26930.	55450.	2.0590
835	725.00	26930.	55450.	2.0590
262	725.00	26900.	55450.	2.0614
263	725.00	26900.	55450.	2.0614
296	725.00	26876.	55450.	2.0632
367	725.00	26775.	55450.	2.0710
368	725.00	26763.	55450.	2.0719
175	725.00	26717.	55450.	2.0755
174	725.00	26717.	55450.	2.0755
42	725.00	26633.	55450.	2.0820
43	725.00	26633.	55450.	2.0820
219	725.00	26597.	55450.	2.0848
218	725.00	26597.	55450.	2.0848
483	725.00	26583.	55450.	2.0860
482	725.00	26583.	55450.	2.0860
439	725.00	26551.	55450.	2.0885
438	725.00	26551.	55450.	2.0885
615	725.00	26542.	55450.	2.0892
614	725.00	26542.	55450.	2.0892
747	725.00	26451.	55450.	2.0964
746	725.00	26451.	55450.	2.0964
849	725.00	26433.	55450.	2.0977
702	725.00	26404.	55450.	2.1001

Table 3.AA.9 (continued)

703	725.00	26404.	55450.	2.1001
394	725.00	26366.	55450.	2.1031
395	725.00	26366.	55450.	2.1031
878	725.00	26335.	55450.	2.1056
879	725.00	26335.	55450.	2.1056
131	725.00	26275.	55450.	2.1103
130	725.00	26275.	55450.	2.1103
658	725.00	26237.	55450.	2.1134
659	725.00	26237.	55450.	2.1134
1010	725.00	26236.	55450.	2.1135
1009	725.00	26236.	55450.	2.1135
350	725.00	26171.	55450.	2.1188
351	725.00	26171.	55450.	2.1188
893	725.00	26107.	55450.	2.1239
570	725.00	25906.	55450.	2.1404
571	725.00	25906.	55450.	2.1404
324	725.00	25871.	55450.	2.1433
323	725.00	25818.	55450.	2.1477
806	725.00	25778.	55450.	2.1511
305	725.00	25504.	55450.	2.1741
1052	725.00	25498.	55450.	2.1747
280	725.00	25405.	55450.	2.1826
833	725.00	25363.	55450.	2.1863
974	725.00	25359.	55450.	2.1866
61	725.00	25271.	55450.	2.1942
279	725.00	25253.	55450.	2.1958
1059	725.00	25239.	55450.	2.1970
411	725.00	24948.	55450.	2.2226
921	725.00	24937.	55450.	2.2236
965	725.00	24834.	55450.	2.2328
544	725.00	24552.	55450.	2.2585
604	725.00	24483.	55450.	2.2649
543	725.00	24438.	55450.	2.2690
288	725.00	24311.	55450.	2.2809
534	725.00	24289.	55450.	2.2829
412	725.00	24287.	55450.	2.2831
630	725.00	24253.	55450.	2.2863
877	725.00	24076.	55450.	2.3031
851	725.00	23990.	55450.	2.3114
62	725.00	23987.	55450.	2.3116
243	725.00	23972.	55450.	2.3131
613	725.00	23892.	55450.	2.3209
674	725.00	23891.	55450.	2.3210
147	725.00	23849.	55450.	2.3250
1060	725.00	23607.	55450.	2.3488
852	725.00	23436.	55450.	2.3661
569	725.00	23184.	55450.	2.3917
657	725.00	23107.	55450.	2.3997
393	725.00	23075.	55450.	2.4031
349	725.00	23060.	55450.	2.4046
148	725.00	23027.	55450.	2.4080
1053	725.00	22997.	55450.	2.4112
1054	725.00	22997.	55450.	2.4112

Table 3.AA.9 (continued)

173	725.00	22985.	55450.	2.4125
437	725.00	22911.	55450.	2.4203
830	725.00	22872.	55450.	2.4244
701	725.00	22836.	55450.	2.4282
384	725.00	22763.	55450.	2.4360
1058	725.00	22761.	55450.	2.4361
973	725.00	22716.	55450.	2.4410
340	725.00	22613.	55450.	2.4521
103	725.00	22600.	55450.	2.4535
586	725.00	22571.	55450.	2.4567
129	725.00	22554.	55450.	2.4586
567	725.00	22522.	55450.	2.4621
302	725.00	22522.	55450.	2.4621
481	725.00	22521.	55450.	2.4621
191	725.00	22501.	55450.	2.4644
428	725.00	22454.	55450.	2.4695
261	725.00	22440.	55450.	2.4710
217	725.00	22427.	55450.	2.4725
745	725.00	22423.	55450.	2.4729
104	725.00	22377.	55450.	2.4780
208	725.00	22339.	55450.	2.4822
85	725.00	22306.	55450.	2.4859
648	725.00	22304.	55450.	2.4861
295	725.00	22154.	55450.	2.5029
366	725.00	22076.	55450.	2.5118
120	725.00	22062.	55450.	2.5134
874	725.00	22058.	55450.	2.5138
164	725.00	22055.	55450.	2.5141
410	725.00	21992.	55450.	2.5214
836	725.00	21957.	55450.	2.5253
192	725.00	21923.	55450.	2.5293
32	725.00	21868.	55450.	2.5357
805	725.00	21861.	55450.	2.5365
692	725.00	21853.	55450.	2.5374
889	725.00	21634.	55450.	2.5631
308	725.00	21603.	55450.	2.5668
41	725.00	21552.	55450.	2.5728
566	725.00	21549.	55450.	2.5732
895	725.00	21512.	55450.	2.5776
797	725.00	21497.	55450.	2.5794
845	725.00	21470.	55450.	2.5827
112	725.00	21364.	55450.	2.5955
1055	725.00	21349.	55450.	2.5973
237	725.00	21226.	55450.	2.6124
880	725.00	21155.	55450.	2.6211
526	725.00	21108.	55450.	2.6270
527	725.00	21108.	55450.	2.6270
610	725.00	21046.	55450.	2.6347
890	725.00	20938.	55450.	2.6483
15	725.00	20901.	55450.	2.6530
846	725.00	20848.	55450.	2.6597
918	725.00	20841.	55450.	2.6606
146	725.00	20808.	55450.	2.6649

Table 3.AA.9 (continued)

848	725.00	20797.	55450.	2.6662
16	725.00	20792.	55450.	2.6669
542	725.00	20729.	55450.	2.6750
572	725.00	20658.	55450.	2.6842
322	725.00	20507.	55450.	2.7040
346	725.00	20478.	55450.	2.7078
568	725.00	20473.	55450.	2.7084
654	725.00	20374.	55450.	2.7216
616	725.00	20140.	55450.	2.7533
896	725.00	20120.	55450.	2.7559
972	725.00	20074.	55450.	2.7623
238	725.00	20054.	55450.	2.7651
629	725.00	19960.	55450.	2.7781
95	725.00	19950.	55450.	2.7794
924	725.00	19925.	55450.	2.7830
390	725.00	19911.	55450.	2.7849
603	725.00	19829.	55450.	2.7964
892	725.00	19809.	55450.	2.7993
982	725.00	19798.	55450.	2.8008
962	725.00	19760.	55450.	2.8062
7	725.00	19742.	55450.	2.8088
525	725.00	19728.	55450.	2.8107
287	725.00	19702.	55450.	2.8145
791	725.00	19665.	55450.	2.8197
529	725.00	19649.	55450.	2.8220
190	725.00	19649.	55450.	2.8221
23	725.00	19635.	55450.	2.8240
352	725.00	19580.	55450.	2.8320
736	725.00	19579.	55450.	2.8321
96	725.00	19531.	55450.	2.8391
660	725.00	19476.	55450.	2.8471
6	725.00	19462.	55450.	2.8491
14	725.00	19380.	55450.	2.8612
698	725.00	19307.	55450.	2.8720
126	725.00	19125.	55450.	2.8993
673	725.00	19112.	55450.	2.9012
1011	725.00	19079.	55450.	2.9064
1061	725.00	19066.	55450.	2.9083
77	725.00	19056.	55450.	2.9099
396	725.00	19012.	55450.	2.9165
434	725.00	19011.	55450.	2.9168
270	725.00	18951.	55450.	2.9260
793	725.00	18855.	55450.	2.9408
968	725.00	18844.	55450.	2.9426
530	725.00	18775.	55450.	2.9535
102	725.00	18660.	55450.	2.9715
170	725.00	18652.	55450.	2.9729
789	725.00	18510.	55450.	2.9957
790	725.00	18510.	55450.	2.9957
585	725.00	18502.	55450.	2.9970
704	725.00	18409.	55450.	3.0121
383	725.00	18358.	55450.	3.0205
742	725.00	18323.	55450.	3.0262

Table 3.AA.9 (continued)

251	725.00	18318.	55450.	3.0271
132	725.00	18232.	55450.	3.0413
76	725.00	18217.	55450.	3.0438
339	725.00	18192.	55450.	3.0480
794	725.00	18177.	55450.	3.0505
471	725.00	18130.	55450.	3.0584
427	725.00	18124.	55450.	3.0595
478	725.00	18121.	55450.	3.0600
440	725.00	18110.	55450.	3.0618
207	725.00	18038.	55450.	3.0741
472	725.00	17968.	55450.	3.0860
804	725.00	17944.	55450.	3.0901
214	725.00	17881.	55450.	3.1010
252	725.00	17841.	55450.	3.1080
647	725.00	17814.	55450.	3.1128
176	725.00	17748.	55450.	3.1242
75	725.00	17724.	55450.	3.1286
163	725.00	17699.	55450.	3.1330
8	725.00	17693.	55450.	3.1339
119	725.00	17691.	55450.	3.1344
735	725.00	17679.	55450.	3.1365
981	725.00	17640.	55450.	3.1435
365	725.00	17613.	55450.	3.1483
31	725.00	17609.	55450.	3.1489
977	725.00	17560.	55450.	3.1577
691	725.00	17437.	55450.	3.1800
748	725.00	17432.	55450.	3.1809
971	725.00	17431.	55450.	3.1812
978	725.00	17327.	55450.	3.2001
484	725.00	17229.	55450.	3.2185
799	725.00	17086.	55450.	3.2454
111	725.00	17036.	55450.	3.2548
258	725.00	16990.	55450.	3.2638
220	725.00	16988.	55450.	3.2640
409	725.00	16882.	55450.	3.2847
625	725.00	16879.	55450.	3.2851
669	725.00	16808.	55450.	3.2990
801	725.00	16766.	55450.	3.3072
17	725.00	16711.	55450.	3.3182
800	725.00	16710.	55450.	3.3184
541	725.00	16670.	55450.	3.3263
626	725.00	16407.	55450.	3.3796
533	725.00	16391.	55450.	3.3830
802	725.00	16337.	55450.	3.3941
670	725.00	16282.	55450.	3.4056
242	725.00	16264.	55450.	3.4094
321	725.00	16194.	55450.	3.4242
1008	725.00	16176.	55450.	3.4279
82	725.00	16173.	55450.	3.4286
264	725.00	16100.	55450.	3.4440
278	725.00	16058.	55450.	3.4532
94	725.00	16038.	55450.	3.4573
38	725.00	15995.	55450.	3.4667

Table 3.AA.9 (continued)

829	725.00	15953.	55450.	3.4758
301	725.00	15841.	55450.	3.5003
910	725.00	15726.	55450.	3.5261
628	725.00	15666.	55450.	3.5395
18	725.00	15638.	55450.	3.5458
145	725.00	15609.	55450.	3.5525
66	725.00	15562.	55450.	3.5631
980	725.00	15481.	55450.	3.5818
873	725.00	15408.	55450.	3.5987
1007	725.00	15395.	55450.	3.6019
866	725.00	15389.	55450.	3.6032
796	725.00	15359.	55450.	3.6103
88	725.00	15302.	55450.	3.6236
847	725.00	15288.	55450.	3.6270
979	725.00	15245.	55450.	3.6373
581	725.00	15178.	55450.	3.6534
44	725.00	15119.	55450.	3.6676
24	725.00	15104.	55450.	3.6713
825	725.00	15089.	55450.	3.6748
272	725.00	15081.	55450.	3.6767
561	725.00	14981.	55450.	3.7014
271	725.00	14980.	55450.	3.7017
609	725.00	14904.	55450.	3.7204
565	725.00	14898.	55450.	3.7219
405	725.00	14872.	55450.	3.7286
189	725.00	14852.	55450.	3.7336
13	725.00	14814.	55450.	3.7430
917	725.00	14796.	55450.	3.7476
970	725.00	14788.	55450.	3.7497
582	725.00	14731.	55450.	3.7642
891	725.00	14715.	55450.	3.7683
869	725.00	14494.	55450.	3.8257
345	725.00	14491.	55450.	3.8265
22	725.00	14440.	55450.	3.8399
361	725.00	14435.	55450.	3.8415
584	725.00	14433.	55450.	3.8420
1021	725.00	14408.	55450.	3.8486
653	725.00	14396.	55450.	3.8518
1022	725.00	14349.	55450.	3.8645
672	725.00	14334.	55450.	3.8684
406	725.00	14309.	55450.	3.8753
826	725.00	14307.	55450.	3.8758
562	725.00	14228.	55450.	3.8971
297	725.00	14218.	55450.	3.9001
389	725.00	14124.	55450.	3.9260
101	725.00	14113.	55450.	3.9289
961	725.00	14092.	55450.	3.9347
803	725.00	14028.	55450.	3.9529
729	725.00	14007.	55450.	3.9588
141	725.00	13963.	55450.	3.9711
362	725.00	13944.	55450.	3.9766
245	725.00	13864.	55450.	3.9995
1023	725.00	13819.	55450.	4.0127

Table 3.AA.9 (continued)

465	725.00	13803.	55450.	4.0172
697	725.00	13777.	55450.	4.0249
69	725.00	13750.	55450.	4.0326
870	725.00	13742.	55450.	4.0352
969	725.00	13682.	55450.	4.0529
509	725.00	13662.	55450.	4.0586
433	725.00	13640.	55450.	4.0652
1	725.00	13598.	55450.	4.0778
125	725.00	13550.	55450.	4.0923
169	725.00	13480.	55450.	4.1136
773	725.00	13469.	55450.	4.1167
298	725.00	13462.	55450.	4.1190
142	725.00	13391.	55450.	4.1410
63	725.00	13306.	55450.	4.1673
1024	725.00	13288.	55450.	4.1728
269	725.00	13279.	55450.	4.1759
25	725.00	13232.	55450.	4.1907
1062	725.00	13228.	55450.	4.1919
560	725.00	13207.	55450.	4.1985
364	725.00	13149.	55450.	4.2170
730	725.00	13145.	55450.	4.2184
5	725.00	13074.	55450.	4.2412
317	725.00	13025.	55450.	4.2573
741	725.00	12982.	55450.	4.2711
246	725.00	12979.	55450.	4.2724
2	725.00	12948.	55450.	4.2825
510	725.00	12934.	55450.	4.2873
466	725.00	12930.	55450.	4.2886
605	725.00	12887.	55450.	4.3029
477	725.00	12878.	55450.	4.3058
70	725.00	12874.	55450.	4.3073
501	725.00	12798.	55450.	4.3327
774	725.00	12776.	55450.	4.3401
1025	725.00	12758.	55450.	4.3462
213	725.00	12758.	55450.	4.3463
649	725.00	12697.	55450.	4.3673
341	725.00	12639.	55450.	4.3873
540	725.00	12612.	55450.	4.3967
913	725.00	12610.	55450.	4.3974
318	725.00	12551.	55450.	4.4180
277	725.00	12471.	55450.	4.4463
26	725.00	12416.	55450.	4.4659
559	725.00	12379.	55450.	4.4794
554	725.00	12314.	55450.	4.5028
685	725.00	12235.	55450.	4.5319
606	725.00	12191.	55450.	4.5484
627	725.00	12190.	55450.	4.5488
385	725.00	12175.	55450.	4.5543
792	725.00	12161.	55450.	4.5598
795	725.00	12115.	55450.	4.5771
201	725.00	12112.	55450.	4.5781
502	725.00	12104.	55450.	4.5813
1006	725.00	12091.	55450.	4.5861

Table 3.AA.9 (continued)

650	725.00	12020.	55450.	4.6133
257	725.00	12014.	55450.	4.6153
342	725.00	11961.	55450.	4.6361
914	725.00	11925.	55450.	4.6498
718	725.00	11894.	55450.	4.6622
320	725.00	11881.	55450.	4.6672
121	725.00	11856.	55450.	4.6769
933	725.00	11854.	55450.	4.6778
333	725.00	11830.	55450.	4.6874
408	725.00	11771.	55450.	4.7107
957	725.00	11743.	55450.	4.7221
113	725.00	11731.	55450.	4.7268
934	725.00	11719.	55450.	4.7316
241	725.00	11653.	55450.	4.7583
537	725.00	11645.	55450.	4.7615
421	725.00	11641.	55450.	4.7633
456	725.00	11607.	55450.	4.7773
671	725.00	11580.	55450.	4.7886
386	725.00	11520.	55450.	4.8136
905	725.00	11519.	55450.	4.8136
686	725.00	11455.	55450.	4.8407
693	725.00	11452.	55450.	4.8419
737	725.00	11442.	55450.	4.8463
21	725.00	11370.	55450.	4.8770
157	725.00	11341.	55450.	4.8893
202	725.00	11332.	55450.	4.8934
78	725.00	11289.	55450.	4.9119
906	725.00	11287.	55450.	4.9129
720.	725.00	11284.	55450.	4.9140
940	725.00	11254.	55450.	4.9273
122	725.00	11224.	55450.	4.9403
538	725.00	11200.	55450.	4.9509
37	725.00	11152.	55450.	4.9721
473	725.00	11143.	55450.	4.9762
33	725.00	11125.	55450.	4.9841
939	725.00	11112.	55450.	4.9901
958	725.00	11100.	55450.	4.9954
334	725.00	11079.	55450.	5.0050
555	725.00	11027.	55450.	5.0286
114	725.00	10972.	55450.	5.0537
531	725.00	10952.	55450.	5.0628
93	725.00	10938.	55450.	5.0696
429	725.00	10928.	55450.	5.0739
253	725.00	10884.	55450.	5.0946
422	725.00	10883.	55450.	5.0951
738	725.00	10836.	55450.	5.1173
54	725.00	10831.	55450.	5.1195
694	725.00	10825.	55450.	5.1224
81	725.00	10815.	55450.	5.1271
867	725.00	10787.	55450.	5.1405
209	725.00	10765.	55450.	5.1511
583	725.00	10738.	55450.	5.1641
377	725.00	10694.	55450.	5.1852

Table 3.AA.9 (continued)

34	725.00	10619.	55450.	5.2219
641	725.00	10616.	55450.	5.2233
65	725.00	10605.	55450.	5.2287
97	725.00	10591.	55450.	5.2353
158	725.00	10584.	55450.	5.2390
911	725.00	10580.	55450.	5.2408
474	725.00	10548.	55450.	5.2569
935	725.00	10514.	55450.	5.2739
89	725.00	10432.	55450.	5.3155
265	725.00	10431.	55450.	5.3158
717	725.00	10425.	55450.	5.3188
144	725.00	10409.	55450.	5.3270
824	725.00	10398.	55450.	5.3325
105	725.00	10382.	55450.	5.3409
430	725.00	10319.	55450.	5.3735
254	725.00	10319.	55450.	5.3736
239	725.00	10292.	55450.	5.3879
165	725.00	10266.	55450.	5.4014
12	725.00	10248.	55450.	5.4108
229	725.00	10199.	55450.	5.4366
210	725.00	10183.	55450.	5.4453
250	725.00	10163.	55450.	5.4560
98	725.00	10091.	55450.	5.4947
74	725.00	10076.	55450.	5.5032
185	725.00	10070.	55450.	5.5063
188	725.00	10055.	55450.	5.5147
938	725.00	10015.	55450.	5.5365
470	725.00	9988.9	55450.	5.5512
378	725.00	9971.1	55450.	5.5611
230	725.00	9925.3	55450.	5.5868
642	725.00	9899.8	55450.	5.6011
454	725.00	9884.8	55450.	5.6096
90	725.00	9869.8	55450.	5.6182
266	725.00	9805.3	55450.	5.6551
1049	725.00	9803.4	55450.	5.6562
823	725.00	9715.0	55450.	5.7077
166	725.00	9678.8	55450.	5.7290
106	725.00	9635.4	55450.	5.7548
100	725.00	9566.5	55450.	5.7963
363	725.00	9556.5	55450.	5.8024
186	725.00	9542.4	55450.	5.8109
734	725.00	9328.7	55450.	5.9440
936	725.00	9309.2	55450.	5.9565
407	725.00	9274.2	55450.	5.9790
244	725.00	9261.3	55450.	5.9873
300	725.00	9161.2	55450.	6.0527
55	725.00	9117.8	55450.	6.0815
828	725.00	9034.6	55450.	6.1375
716	725.00	8957.1	55450.	6.1906
276	725.00	8884.1	55450.	6.2415
1005	725.00	8795.2	55450.	6.3046
608	725.00	8762.6	55450.	6.3280
872	725.00	8758.1	55450.	6.3313

Table 3.AA.9 (continued)

916	725.00	8751.8	55450.	6.3359
937	725.00	8748.9	55450.	6.3379
539	725.00	8552.9	55450.	6.4831
865	725.00	8536.6	55450.	6.4956
344	725.00	8504.1	55450.	6.5204
532	725.00	8492.8	55450.	6.5291
907	725.00	8489.2	55450.	6.5319
281	725.00	8427.0	55450.	6.5801
960	725.00	8425.0	55450.	6.5816
652	725.00	8417.9	55450.	6.5872
388	725.00	8336.6	55450.	6.6514
319	725.00	8313.8	55450.	6.6696
168	725.00	8308.0	55450.	6.6743
273	725.00	8276.9	55450.	6.6993
432	725.00	8269.3	55450.	6.7055
143	725.00	8267.0	55450.	6.7074
556	725.00	8252.4	55450.	6.7192
564	725.00	8247.8	55450.	6.7230
696	725.00	8246.4	55450.	6.7242
453	725.00	8240.5	55450.	6.7290
249	725.00	8111.2	55450.	6.8363
73	725.00	8101.9	55450.	6.8440
469	725.00	8044.8	55450.	6.8927
124	725.00	7974.2	55450.	6.9536
274	725.00	7884.3	55450.	7.0330
282	725.00	7825.0	55450.	7.0862
817	725.00	7802.8	55450.	7.1064
818	725.00	7802.8	55450.	7.1064
909	725.00	7776.9	55450.	7.1301
30	725.00	7727.2	55450.	7.1760
740	725.00	7641.8	55450.	7.2561
476	725.00	7635.0	55450.	7.2626
212	725.00	7634.7	55450.	7.2629
268	725.00	7606.4	55450.	7.2899
79	725.00	7597.1	55450.	7.2988
110	725.00	7588.7	55450.	7.3069
563	725.00	7500.6	55450.	7.3928
715	725.00	7488.9	55450.	7.4043
733	725.00	7487.5	55450.	7.4057
231	725.00	7474.5	55450.	7.4186
819	725.00	7368.7	55450.	7.5250
690	725.00	7315.7	55450.	7.5796
827	725.00	7311.0	55450.	7.5845
597	725.00	7278.3	55450.	7.6185
775	725.00	7159.2	55450.	7.7453
511	725.00	7133.0	55450.	7.7737
236	725.00	7121.9	55450.	7.7859
206	725.00	7104.8	55450.	7.8046
256	725.00	7039.2	55450.	7.8773
871	725.00	7014.2	55450.	7.9054
426	725.00	6906.5	55450.	8.0286
162	725.00	6874.7	55450.	8.0658
20	725.00	6867.9	55450.	8.0738

Table 3.AA.9 (continued)

19	725.00	6843.8	55450.	8.1022
235	725.00	6840.9	55450.	8.1056
1045	725.00	6833.5	55450.	8.1145
109	725.00	6779.2	55450.	8.1794
299	725.00	6704.3	55450.	8.2708
4	725.00	6685.8	55450.	8.2937
598	725.00	6662.4	55450.	8.3228
3	725.00	6635.4	55450.	8.3567
118	725.00	6627.4	55450.	8.3668
503	725.00	6609.6	55450.	8.3894
452	725.00	6596.1	55450.	8.4064
56	725.00	6595.2	55450.	8.4076
9	725.00	6584.6	55450.	8.4212
1046	725.00	6472.2	55450.	8.5674
338	725.00	6452.5	55450.	8.5936
1001	725.00	6414.6	55450.	8.6443
558	725.00	6411.7	55450.	8.6483
861	725.00	6321.6	55450.	8.7716
36	725.00	6309.5	55450.	8.7883
29	725.00	6305.1	55450.	8.7944
382	725.00	6282.6	55450.	8.8259
786	725.00	6243.0	55450.	8.8819
868	725.00	6227.4	55450.	8.9042
862	725.00	6211.4	55450.	8.9271
689	725.00	6203.9	55450.	8.9379
731	725.00	6152.2	55450.	9.0130
10	725.00	6122.1	55450.	9.0574
1002	725.00	6054.7	55450.	9.1581
714	725.00	6020.6	55450.	9.2100
425	725.00	5994.8	55450.	9.2496
205	725.00	5993.8	55450.	9.2512
161	725.00	5973.5	55450.	9.2826
607	725.00	5972.0	55450.	9.2850
646	725.00	5965.3	55450.	9.2955
651	725.00	5964.1	55450.	9.2973
343	725.00	5896.3	55450.	9.4041
820	725.00	5887.6	55450.	9.4181
27	725.00	5842.9	55450.	9.4902
92	725.00	5837.4	55450.	9.4991
467	725.00	5834.1	55450.	9.5045
60	725.00	5824.8	55450.	9.5196
713	725.00	5815.8	55450.	9.5344
915	725.00	5803.3	55450.	9.5550
247	725.00	5775.2	55450.	9.6014
240	725.00	5754.6	55450.	9.6358
71	725.00	5748.1	55450.	9.6467
117	725.00	5708.6	55450.	9.7134
35	725.00	5698.5	55450.	9.7306
381	725.00	5685.9	55450.	9.7522
11	725.00	5682.0	55450.	9.7589
387	725.00	5655.0	55450.	9.8055
292	725.00	5629.1	55450.	9.8506
293	725.00	5629.1	55450.	9.8506

Table 3.AA.9 (continued)

99	725.00	5620.3	55450.	9.8660
337	725.00	5606.4	55450.	9.8904
777	725.00	5582.0	55450.	9.9337
123	725.00	5571.2	55450.	9.9530
59	725.00	5535.8	55450.	10.017
1004	725.00	5499.3	55450.	10.083
80	725.00	5457.2	55450.	10.161
645	725.00	5429.5	55450.	10.213
739	725.00	5417.7	55450.	10.235
785	725.00	5366.2	55450.	10.333
959	725.00	5355.3	55450.	10.354
275	725.00	5297.2	55450.	10.468
255	725.00	5266.5	55450.	10.529
187	725.00	5258.2	55450.	10.545
285	725.00	5250.8	55450.	10.560
286	725.00	5250.8	55450.	10.560
475	725.00	5227.7	55450.	10.607
695	725.00	5217.2	55450.	10.628
687	725.00	5191.7	55450.	10.681
602	725.00	5137.9	55450.	10.792
601	725.00	5137.9	55450.	10.792
335	725.00	5081.4	55450.	10.912
952	725.00	5080.6	55450.	10.914
951	725.00	5080.6	55450.	10.914
203	725.00	5069.2	55450.	10.939
232	725.00	5023.7	55450.	11.038
294	725.00	5014.9	55450.	11.057
211	725.00	4982.4	55450.	11.129
291	725.00	4955.4	55450.	11.190
451	725.00	4951.8	55450.	11.198
115	725.00	4901.8	55450.	11.312
431	725.00	4871.0	55450.	11.384
822	725.00	4867.6	55450.	11.392
91	725.00	4845.1	55450.	11.445
72	725.00	4840.1	55450.	11.456
423	725.00	4819.9	55450.	11.504
468	725.00	4812.7	55450.	11.522
248	725.00	4771.3	55450.	11.622
108	725.00	4681.9	55450.	11.844
234	725.00	4665.8	55450.	11.884
950	725.00	4589.5	55450.	12.082
1048	725.00	4589.4	55450.	12.082
159	725.00	4531.5	55450.	12.237
953	725.00	4524.7	55450.	12.255
863	725.00	4510.3	55450.	12.294
784	725.00	4489.4	55450.	12.351
557	725.00	4430.7	55450.	12.515
167	725.00	4429.6	55450.	12.518
908	725.00	4403.9	55450.	12.591
732	725.00	4358.5	55450.	12.722
514	725.00	4248.6	55450.	13.051
379	725.00	4222.9	55450.	13.131
64	725.00	4216.6	55450.	13.150

Table 3.AA.9 (continued)

643	725.00	4212.5	55450.	13.163
600	725.00	4209.9	55450.	13.171
267	725.00	4208.8	55450.	13.175
57	725.00	4072.6	55450.	13.615
284	725.00	3980.8	55450.	13.930
688	725.00	3804.3	55450.	14.576
380	725.00	3801.3	55450.	14.587
424	725.00	3795.2	55450.	14.610
160	725.00	3784.4	55450.	14.652
107	725.00	3674.4	55450.	15.091
783	725.00	3612.6	55450.	15.349
644	725.00	3605.8	55450.	15.378
513	725.00	3599.4	55450.	15.405
28	725.00	3595.2	55450.	15.423
204	725.00	3594.9	55450.	15.424
116	725.00	3502.0	55450.	15.834
449	725.00	3479.8	55450.	15.935
336	725.00	3472.6	55450.	15.968
912	725.00	3462.4	55450.	16.015
956	725.00	3405.8	55450.	16.281
821	725.00	3359.4	55450.	16.506
450	725.00	3307.5	55450.	16.765
58	725.00	3298.6	55450.	16.810
1047	725.00	3241.7	55450.	17.105
517	725.00	3090.6	55450.	17.941
518	725.00	3066.0	55450.	18.085
949	725.00	3051.3	55450.	18.173
290	725.00	2993.9	55450.	18.521
864	725.00	2971.9	55450.	18.658
955	725.00	2943.0	55450.	18.841
954	725.00	2921.7	55450.	18.978
519	725.00	2845.6	55450.	19.486
1003	725.00	2836.3	55450.	19.550
782	725.00	2735.8	55450.	20.268
283	725.00	2691.5	55450.	20.602
520	725.00	2625.2	55450.	21.122
512	725.00	2620.3	55450.	21.162
776	725.00	2589.3	55450.	21.415
233	725.00	2573.0	55450.	21.551
506	725.00	2502.6	55450.	22.157
521	725.00	2404.8	55450.	23.058
504	725.00	2403.3	55450.	23.072
522	725.00	2184.4	55450.	25.385
505	725.00	2160.0	55450.	25.672
599	725.00	1994.1	55450.	27.807
781	725.00	1859.0	55450.	29.828
289	725.00	1089.8	55450.	50.880

Table 3.AA.10

TITLE=
MPC-24 Structural Analysis

SUBTITLE 1 =
Component: Enclosure Vessel
SUBTITLE 2 =
Load Combination: E3.b (See Table 3.1.4)
SUBTITLE 3 =
Stress Result: Primary Membrane (PM)

PRINT ELEMENT TABLE ITEMS PER ELEMENT

STAT ELEM	CURRENT REF TEMP	MIXED PM	PREVIOUS ALLOW	PREVIOUS SF
1210	450.00	6345.0	43450.	6.8479
1209	450.00	6343.8	43450.	6.8492
1208	450.00	6341.0	43450.	6.8522
1207	450.00	6336.7	43450.	6.8568
1206	450.00	6331.0	43450.	6.8631
1205	450.00	6323.8	43450.	6.8709
1204	450.00	6315.2	43450.	6.8802
1211	450.00	6311.8	43450.	6.8839
1212	450.00	6311.5	43450.	6.8843
1213	450.00	6309.7	43450.	6.8863
1203	450.00	6309.0	43450.	6.8870
1214	450.00	6306.4	43450.	6.8898
1202	450.00	6302.8	43450.	6.8938
1215	450.00	6301.8	43450.	6.8949
1216	450.00	6295.8	43450.	6.9014
1201	450.00	6294.2	43450.	6.9031
1217	450.00	6288.4	43450.	6.9095
1200	450.00	6281.3	43450.	6.9174
1218	450.00	6279.8	43450.	6.9190
1219	450.00	6270.2	43450.	6.9296
1199	450.00	6266.6	43450.	6.9335
1220	450.00	6259.4	43450.	6.9416
1198	450.00	6250.8	43450.	6.9511
1221	450.00	6247.2	43450.	6.9551
1138	450.00	-6241.7	43450.	6.9612
1222	450.00	6233.9	43450.	6.9699
1197	450.00	6233.7	43450.	6.9701
1223	450.00	6219.7	43450.	6.9859
1196	450.00	6215.7	43450.	6.9904
1224	450.00	6204.5	43450.	7.0029
1195	450.00	6196.7	43450.	7.0118
1225	450.00	6188.6	43450.	7.0210
1194	450.00	6176.8	43450.	7.0343
1193	450.00	6154.0	43450.	7.0605
1226	450.00	6133.6	43450.	7.0840
1192	450.00	6130.4	43450.	7.0877
1227	450.00	6114.2	43450.	7.1064
1191	450.00	6106.3	43450.	7.1156
1228	450.00	6094.5	43450.	7.1294

Table 3.AA.10 (continued)

1190	450.00	6082.1	43450.	7.1440
1229	450.00	6074.4	43450.	7.1529
1137	450.00	-6059.3	43450.	7.1708
1230	450.00	6054.2	43450.	7.1768
1231	450.00	6033.9	43450.	7.2010
1135	450.00	-6026.7	43450.	7.2096
1136	450.00	-6025.9	43450.	7.2106
1134	450.00	-6025.3	43450.	7.2113
1131	450.00	-6022.1	43450.	7.2151
1139	450.00	-6021.4	43450.	7.2159
1133	450.00	-6017.8	43450.	7.2202
1132	450.00	-6003.0	43450.	7.2381
1141	450.00	-6000.3	43450.	7.2414
1142	450.00	-5999.4	43450.	7.2424
1140	450.00	-5994.6	43450.	7.2481
1143	450.00	-5993.0	43450.	7.2502
1144	450.00	-5986.1	43450.	7.2585
1189	450.00	5969.5	43450.	7.2787
1188	450.00	5945.7	43450.	7.3078
1232	450.00	5938.5	43450.	7.3166
1187	450.00	5922.4	43450.	7.3366
1233	450.00	5915.7	43450.	7.3449
1186	450.00	5899.5	43450.	7.3650
1234	450.00	5893.3	43450.	7.3728
1185	450.00	5877.4	43450.	7.3927
1235	450.00	5871.4	43450.	7.4002
1184	450.00	5856.0	43450.	7.4197
1236	450.00	5850.3	43450.	7.4269
1183	450.00	5836.2	43450.	7.4449
1237	450.00	5830.1	43450.	7.4527
1182	450.00	5817.4	43450.	7.4690
1238	450.00	5810.7	43450.	7.4775
1181	450.00	5797.7	43450.	7.4943
1239	450.00	5793.1	43450.	7.5003
1180	450.00	5774.9	43450.	7.5239
1240	450.00	5774.2	43450.	7.5248
1241	450.00	5750.4	43450.	7.5560
1179	450.00	5748.9	43450.	7.5580
1242	450.00	5724.5	43450.	7.5902
1178	450.00	5722.5	43450.	7.5929
1243	450.00	5698.4	43450.	7.6250
1177	450.00	5696.1	43450.	7.6280
1244	450.00	5672.2	43450.	7.6602
1176	450.00	5669.7	43450.	7.6636
1245	450.00	5645.8	43450.	7.6959
1175	450.00	5639.7	43450.	7.7043
1246	450.00	5619.3	43450.	7.7322
1174	450.00	5613.4	43450.	7.7404
1103	450.00	5589.6	43450.	7.7734
1173	450.00	5587.1	43450.	7.7769
1146	450.00	-5563.2	43450.	7.8102
1104	450.00	5563.2	43450.	7.8103
1172	450.00	5560.9	43450.	7.8135

Table 3.AA.10 (continued)

1145	450.00	-5545.8	43450.	7.8347
1105	450.00	5536.9	43450.	7.8474
1171	450.00	5534.9	43450.	7.8502
1106	450.00	5510.7	43450.	7.8847
1170	450.00	5509.1	43450.	7.8869
1107	450.00	5484.6	43450.	7.9221
1169	450.00	5483.8	43450.	7.9234
1168	450.00	5469.6	43450.	7.9439
1108	450.00	5459.0	43450.	7.9593
1167	450.00	5455.3	43450.	7.9647
1166	450.00	5434.7	43450.	7.9949
1109	450.00	5434.4	43450.	7.9953
1110	450.00	5420.1	43450.	8.0164
1111	450.00	5403.3	43450.	8.0413
1165	450.00	4006.2	43450.	10.846
1164	450.00	3983.3	43450.	10.908
1163	450.00	3958.3	43450.	10.977
1162	450.00	3934.4	43450.	11.043
1161	450.00	3911.4	43450.	11.108
1160	450.00	3889.1	43450.	11.172
1159	450.00	3868.1	43450.	11.233
1158	450.00	3812.9	43450.	11.396
1157	450.00	3802.9	43450.	11.425
1156	450.00	3793.4	43450.	11.454
1155	450.00	3769.9	43450.	11.526
1112	450.00	3707.1	43450.	11.721
1113	450.00	3684.0	43450.	11.794
1114	450.00	3658.4	43450.	11.877
1115	450.00	3633.8	43450.	11.957
1116	450.00	3610.1	43450.	12.036
1117	450.00	3587.2	43450.	12.113
1118	450.00	3565.6	43450.	12.186
1119	450.00	3515.2	43450.	12.361
1120	450.00	3496.7	43450.	12.426
1130	450.00	-3486.4	43450.	12.463
1121	450.00	3481.8	43450.	12.479
1129	450.00	-3454.4	43450.	12.578
1128	450.00	-3453.2	43450.	12.583
1122	450.00	3452.4	43450.	12.585
1127	450.00	-3445.0	43450.	12.613
1126	450.00	-3432.6	43450.	12.658
1125	450.00	-3417.5	43450.	12.714
1124	450.00	-3398.2	43450.	12.786
1123	450.00	-3398.0	43450.	12.787
1154	450.00	429.30	43450.	101.21
1153	450.00	425.46	43450.	102.12
1152	450.00	406.24	43450.	106.96
1151	450.00	390.69	43450.	111.21
1150	450.00	377.47	43450.	115.11
1149	450.00	367.58	43450.	118.21
1148	450.00	362.22	43450.	119.95
1147	450.00	337.37	43450.	128.79

Table 3.AA.11

TITLE=
MPC-24 Structural Analysis

SUBTITLE 1 =
Component: Enclosure Vessel
SUBTITLE 2 =
Load Combination: E3.b (See Table 3.1.4)
SUBTITLE 3 =
Stress Result: Primary Local Plus Primary Bending (PL+PB)

PRINT ELEMENT TABLE ITEMS PER ELEMENT

STAT ELEM	CURRENT REF TEMP	MIXED PL+PB	PREVIOUS ALLOW	PREVIOUS SF
1138	450.00	24650.	65200.	2.6450
1139	450.00	24430.	65200.	2.6688
1131	450.00	23370.	65200.	2.7899
1130	450.00	20843.	65200.	3.1282
1146	450.00	20111.	65200.	3.2420
1147	450.00	17610.	65200.	3.7025
1233	450.00	15705.	65200.	4.1516
1234	450.00	15705.	65200.	4.1517
1235	450.00	15514.	65200.	4.2027
1232	450.00	15416.	65200.	4.2293
1188	450.00	15157.	65200.	4.3018
1187	450.00	15156.	65200.	4.3019
1186	450.00	15105.	65200.	4.3166
1236	450.00	14805.	65200.	4.4039
1189	450.00	14772.	65200.	4.4138
1185	450.00	14578.	65200.	4.4724
1132	450.00	13682.	65200.	4.7653
1237	450.00	13541.	65200.	4.8150
1184	450.00	13539.	65200.	4.8157
1209	450.00	12996.	65200.	5.0171
1210	450.00	12996.	65200.	5.0171
1211	450.00	12948.	65200.	5.0356
1208	450.00	12924.	65200.	5.0448
1140	450.00	12917.	65200.	5.0474
1212	450.00	12897.	65200.	5.0553
1137	450.00	12762.	65200.	5.1088
1213	450.00	12733.	65200.	5.1204
1207	450.00	12731.	65200.	5.1215
1214	450.00	12475.	65200.	5.2263
1123	450.00	12469.	65200.	5.2290
1206	450.00	12420.	65200.	5.2497
1215	450.00	12128.	65200.	5.3760
1122	450.00	12103.	65200.	5.3873
1205	450.00	11998.	65200.	5.4343
1183	450.00	11949.	65200.	5.4564
1155	450.00	11828.	65200.	5.5122
1216	450.00	11698.	65200.	5.5735
1238	450.00	11684.	65200.	5.5802
1204	450.00	11474.	65200.	5.6824

Table 3.AA.11 (continued)

1129	450.00	11291.	65200.	5.7745
1217	450.00	11195.	65200.	5.8241
1231	450.00	11181.	65200.	5.8314
1190	450.00	11122.	65200.	5.8621
1230	450.00	10880.	65200.	5.9926
1203	450.00	10860.	65200.	6.0039
1154	450.00	10734.	65200.	6.0741
1145	450.00	10632.	65200.	6.1326
1218	450.00	10629.	65200.	6.1341
1191	450.00	10464.	65200.	6.2309
1202	450.00	10456.	65200.	6.2356
1229	450.00	10296.	65200.	6.3325
1219	450.00	10030.	65200.	6.5003
1201	450.00	10028.	65200.	6.5017
1182	450.00	9838.1	65200.	6.6273
1192	450.00	9519.3	65200.	6.8493
1228	450.00	9459.0	65200.	6.8929
1200	450.00	9445.0	65200.	6.9031
1220	450.00	9398.7	65200.	6.9371
1239	450.00	9273.0	65200.	7.0312
1136	450.00	9115.3	65200.	7.1528
1133	450.00	8767.9	65200.	7.4362
1221	450.00	8732.2	65200.	7.4666
1141	450.00	8719.2	65200.	7.4777
1199	450.00	8593.8	65200.	7.5868
1194	450.00	8486.3	65200.	7.6830
1227	450.00	8398.3	65200.	7.7635
1193	450.00	8331.1	65200.	7.8261
1135	450.00	8158.4	65200.	7.9917
1148	450.00	8079.4	65200.	8.0699
1222	450.00	8066.8	65200.	8.0825
1121	450.00	8042.1	65200.	8.1073
1195	450.00	7933.1	65200.	8.2188
1143	450.00	7874.7	65200.	8.2797
1144	450.00	7873.9	65200.	8.2805
1124	450.00	7860.4	65200.	8.2947
1198	450.00	7714.2	65200.	8.4520
1223	450.00	7423.4	65200.	8.7830
1156	450.00	7399.0	65200.	8.8120
1196	450.00	7256.7	65200.	8.9848
1226	450.00	7142.5	65200.	9.1284
1181	450.00	7134.6	65200.	9.1386
1197	450.00	6831.8	65200.	9.5436
1224	450.00	6824.5	65200.	9.5538
1142	450.00	6585.9	65200.	9.8999
1110	450.00	6580.4	65200.	9.9082
1111	450.00	6578.6	65200.	9.9109
1157	450.00	6567.1	65200.	9.9283
1134	450.00	6546.2	65200.	9.9600
1167	450.00	6531.2	65200.	9.9828
1166	450.00	6529.7	65200.	9.9851
1225	450.00	6485.7	65200.	10.053
1109	450.00	6459.3	65200.	10.094

Table 3.AA.11 (continued)

1153	450.00	6441.7	65200.	10.122
1168	450.00	6433.9	65200.	10.134
1179	450.00	6430.8	65200.	10.139
1180	450.00	6430.6	65200.	10.139
1241	450.00	6413.5	65200.	10.166
1240	450.00	6411.7	65200.	10.169
1128	450.00	6404.8	65200.	10.180
1242	450.00	6335.1	65200.	10.292
1178	450.00	6291.7	65200.	10.363
1177	450.00	6248.5	65200.	10.435
1176	450.00	6232.1	65200.	10.462
1243	450.00	6230.2	65200.	10.465
1175	450.00	6202.1	65200.	10.513
1244	450.00	6199.8	65200.	10.516
1245	450.00	6183.1	65200.	10.545
1174	450.00	6174.5	65200.	10.560
1173	450.00	6158.0	65200.	10.588
1246	450.00	6151.8	65200.	10.598
1169	450.00	6145.3	65200.	10.610
1172	450.00	6131.8	65200.	10.633
1103	450.00	6124.1	65200.	10.646
1108	450.00	6117.1	65200.	10.659
1104	450.00	6108.1	65200.	10.674
1171	450.00	6106.9	65200.	10.676
1105	450.00	6081.9	65200.	10.720
1170	450.00	6069.0	65200.	10.743
1106	450.00	6056.8	65200.	10.765
1107	450.00	6016.8	65200.	10.836
1149	450.00	5338.9	65200.	12.212
1125	450.00	5190.0	65200.	12.563
1120	450.00	5007.2	65200.	13.021
1164	450.00	4982.6	65200.	13.085
1165	450.00	4980.1	65200.	13.092
1158	450.00	4781.0	65200.	13.637
1159	450.00	4771.7	65200.	13.664
1113	450.00	4742.0	65200.	13.749
1112	450.00	4739.0	65200.	13.758
1163	450.00	4668.8	65200.	13.965
1118	450.00	4631.2	65200.	14.078
1162	450.00	4522.0	65200.	14.418
1161	450.00	4505.9	65200.	14.470
1160	450.00	4463.9	65200.	14.606
1114	450.00	4369.0	65200.	14.923
1152	450.00	4354.1	65200.	14.974
1115	450.00	4196.4	65200.	15.537
1116	450.00	4175.8	65200.	15.614
1117	450.00	4172.4	65200.	15.627
1119	450.00	3983.9	65200.	16.366
1126	450.00	3937.6	65200.	16.558
1127	450.00	3890.1	65200.	16.760
1150	450.00	3539.0	65200.	18.423
1151	450.00	3505.5	65200.	18.599

Table 3.AA.12

TITLE=
MPC-24 Structural Analysis

SUBTITLE 1 =
Component: Basket Supports
SUBTITLE 2 =
Load Combination: E3.b (See Table 3.1.4)
SUBTITLE 3 =
Stress Result: Primary Membrane (PM)

PRINT ELEMENT TABLE ITEMS PER ELEMENT

STAT ELEM	CURRENT REF TEMP	MIXED PM	PREVIOUS ALLOW	PREVIOUS SF
1096	450.00	-9019.1	43450.	4.8175
1095	450.00	-9015.7	43450.	4.8194
1094	450.00	-8987.4	43450.	4.8345
1093	450.00	-8959.2	43450.	4.8498
1099	450.00	-8076.7	43450.	5.3797
1098	450.00	-8073.2	43450.	5.3820
1097	450.00	-8041.3	43450.	5.4034
1102	450.00	-3377.6	43450.	12.864
1100	450.00	-3377.6	43450.	12.864
1101	450.00	-3377.6	43450.	12.864
1079	450.00	-3366.5	43450.	12.906
1076	450.00	-3366.3	43450.	12.908
1077	450.00	-3366.3	43450.	12.908
1080	450.00	-3363.1	43450.	12.920
1078	450.00	-3335.4	43450.	13.027
1081	450.00	-3334.3	43450.	13.031
1082	450.00	-3305.5	43450.	13.145
1083	450.00	-3276.7	43450.	13.260
1071	450.00	-52.243	43450.	831.69
1072	450.00	-52.243	43450.	831.69
1073	450.00	-52.243	43450.	831.69
1074	450.00	-52.243	43450.	831.69
1084	450.00	-18.187	43450.	2389.0
1085	450.00	-18.187	43450.	2389.0
1086	450.00	-18.187	43450.	2389.0
1087	450.00	-18.187	43450.	2389.0
1088	450.00	-18.187	43450.	2389.0
1089	450.00	-14.748	43450.	2946.2
1090	450.00	-14.748	43450.	2946.2
1091	450.00	-14.748	43450.	2946.2
1092	450.00	-14.748	43450.	2946.2
1075	450.00	-6.8447	43450.	6348.0

Table 3.AA.13

TITLE=
MPC-24 Structural Analysis

SUBTITLE 1 =
Component: Basket Supports
SUBTITLE 2 =
Load Combination: E3.b (See Table 3.1.4)
SUBTITLE 3 =
Stress Result: Primary Local Plus Primary Bending (PL+PB)

PRINT ELEMENT TABLE ITEMS PER ELEMENT

STAT ELEM	CURRENT REF TEMP	MIXED PL+PB	PREVIOUS ALLOW	PREVIOUS SF
1096	450.00	10050.	65200.	6.4875
1095	450.00	9990.6	65200.	6.5261
1094	450.00	9502.9	65200.	6.8611
1088	450.00	9175.7	65200.	7.1057
1093	450.00	9015.2	65200.	7.2322
1099	450.00	8769.3	65200.	7.4350
1098	450.00	8704.4	65200.	7.4905
1087	450.00	8666.6	65200.	7.5231
1097	450.00	8102.8	65200.	8.0466
1074	450.00	7615.4	65200.	8.5616
1073	450.00	7090.4	65200.	9.1955
1086	450.00	4926.0	65200.	13.236
1078	450.00	3894.8	65200.	16.740
1077	450.00	3699.7	65200.	17.623
1089	450.00	3365.9	65200.	19.371
1092	450.00	3334.9	65200.	19.551
1079	450.00	3294.0	65200.	19.794
1072	450.00	3279.9	65200.	19.879
1084	450.00	3244.1	65200.	20.098
1100	450.00	3217.4	65200.	20.265
1075	450.00	3198.6	65200.	20.384
1071	450.00	3148.8	65200.	20.706
1091	450.00	3044.4	65200.	21.416
1080	450.00	2687.9	65200.	24.257
1102	450.00	2545.9	65200.	25.610
1090	450.00	2398.6	65200.	27.182
1101	450.00	2251.3	65200.	28.961
1085	450.00	2099.2	65200.	31.060
1081	450.00	2081.8	65200.	31.319
1076	450.00	1950.8	65200.	33.422
1083	450.00	1749.7	65200.	37.264
1082	450.00	1684.0	65200.	38.717

Table 3.AA.14

TITLE=
MPC-24 Structural Analysis

SUBTITLE 1 =
Component: Fuel Basket
SUBTITLE 2 =
Load Combination: F3.c (See Table 3.1.3)
SUBTITLE 3 =
Stress Result: Primary Membrane (PM)

PRINT ELEMENT TABLE ITEMS PER ELEMENT

STAT ELEM	CURRENT REF TEMP	CURRENT PM	PREVIOUS ALLOW	PREVIOUS SF
852	725.00	-9769.6	36950.	3.7821
851	725.00	-9767.2	36950.	3.7831
472	725.00	-9753.9	36950.	3.7882
471	725.00	-9751.5	36950.	3.7892
982	725.00	-9271.3	36950.	3.9854
514	725.00	-9255.4	36950.	3.9923
981	725.00	-9244.5	36950.	3.9970
513	725.00	-9228.6	36950.	4.0038
980	725.00	-9217.7	36950.	4.0086
512	725.00	-9201.8	36950.	4.0155
979	725.00	-9190.9	36950.	4.0203
511	725.00	-9175.0	36950.	4.0272
978	725.00	-9164.1	36950.	4.0320
510	725.00	-9148.2	36950.	4.0390
977	725.00	-9137.3	36950.	4.0439
509	725.00	-9121.4	36950.	4.0509
850	725.00	-9109.3	36950.	4.0563
736	725.00	-9094.8	36950.	4.0628
470	725.00	-9094.3	36950.	4.0630
735	725.00	-9092.4	36950.	4.0638
896	725.00	-9086.5	36950.	4.0665
895	725.00	-9084.1	36950.	4.0676
849	725.00	-9082.5	36950.	4.0682
469	725.00	-9067.5	36950.	4.0750
848	725.00	-9055.7	36950.	4.0803
506	725.00	-9044.0	36950.	4.0856
468	725.00	-9040.7	36950.	4.0871
974	725.00	-9034.7	36950.	4.0898
847	725.00	-9028.9	36950.	4.0924
505	725.00	-9017.2	36950.	4.0977
467	725.00	-9013.9	36950.	4.0992
973	725.00	-9007.9	36950.	4.1020
846	725.00	-9002.1	36950.	4.1046
504	725.00	-8990.4	36950.	4.1099
466	725.00	-8987.1	36950.	4.1115
972	725.00	-8981.1	36950.	4.1142
845	725.00	-8975.3	36950.	4.1168
503	725.00	-8963.6	36950.	4.1222
465	725.00	-8960.3	36950.	4.1237

Table 3.AA.14 (continued)

971	725.00	-8954.3	36950.	4.1265
502	725.00	-8936.8	36950.	4.1346
970	725.00	-8927.5	36950.	4.1389
501	725.00	-8910.0	36950.	4.1470
969	725.00	-8900.7	36950.	4.1514
777	725.00	-8686.8	36950.	4.2536
252	725.00	-8684.8	36950.	4.2546
251	725.00	-8682.4	36950.	4.2558
1025	725.00	-8681.2	36950.	4.2563
808	725.00	-8676.7	36950.	4.2585
807	725.00	-8674.3	36950.	4.2597
776	725.00	-8652.4	36950.	4.2705
1024	725.00	-8646.8	36950.	4.2732
775	725.00	-8630.6	36950.	4.2813
1023	725.00	-8625.0	36950.	4.2840
774	725.00	-8608.8	36950.	4.2921
1022	725.00	-8603.2	36950.	4.2949
773	725.00	-8587.1	36950.	4.3030
1021	725.00	-8581.5	36950.	4.3058
734	725.00	-8418.5	36950.	4.3892
894	725.00	-8410.1	36950.	4.3935
733	725.00	-8391.7	36950.	4.4032
893	725.00	-8383.3	36950.	4.4076
732	725.00	-8364.9	36950.	4.4173
892	725.00	-8356.5	36950.	4.4217
731	725.00	-8338.1	36950.	4.4315
891	725.00	-8329.7	36950.	4.4359
730	725.00	-8311.3	36950.	4.4458
890	725.00	-8302.9	36950.	4.4502
729	725.00	-8284.5	36950.	4.4602
889	725.00	-8276.1	36950.	4.4647
250	725.00	-8031.5	36950.	4.6006
806	725.00	-8024.1	36950.	4.6049
249	725.00	-8004.7	36950.	4.6160
805	725.00	-7997.3	36950.	4.6203
248	725.00	-7977.9	36950.	4.6315
804	725.00	-7970.5	36950.	4.6358
247	725.00	-7951.1	36950.	4.6471
803	725.00	-7943.7	36950.	4.6515
246	725.00	-7924.3	36950.	4.6629
802	725.00	-7916.9	36950.	4.6672
245	725.00	-7897.5	36950.	4.6787
801	725.00	-7890.1	36950.	4.6831
632	725.00	-7825.2	36950.	4.7219
631	725.00	-7822.8	36950.	4.7234
428	725.00	-7812.8	36950.	4.7294
427	725.00	-7810.4	36950.	4.7309
630	725.00	-7166.8	36950.	5.1557
426	725.00	-7154.4	36950.	5.1647
629	725.00	-7140.0	36950.	5.1751
425	725.00	-7127.6	36950.	5.1841
628	725.00	-7113.2	36950.	5.1946
424	725.00	-7100.8	36950.	5.2037

Table 3.AA.14 (continued)

692	725.00	-7094.6	36950.	5.2082
691	725.00	-7092.2	36950.	5.2100
676	725.00	-7088.0	36950.	5.2131
627	725.00	-7086.4	36950.	5.2142
675	725.00	-7085.5	36950.	5.2149
423	725.00	-7074.0	36950.	5.2234
626	725.00	-7059.6	36950.	5.2340
422	725.00	-7047.2	36950.	5.2432
625	725.00	-7032.8	36950.	5.2540
421	725.00	-7020.4	36950.	5.2633
208	725.00	-6700.5	36950.	5.5145
207	725.00	-6698.1	36950.	5.5165
588	725.00	-6694.2	36950.	5.5197
587	725.00	-6691.8	36950.	5.5217
690	725.00	-6421.3	36950.	5.7543
674	725.00	-6415.3	36950.	5.7597
689	725.00	-6394.5	36950.	5.7784
673	725.00	-6388.5	36950.	5.7838
688	725.00	-6367.7	36950.	5.8027
672	725.00	-6361.7	36950.	5.8082
687	725.00	-6340.9	36950.	5.8272
671	725.00	-6334.9	36950.	5.8328
686	725.00	-6314.1	36950.	5.8520
670	725.00	-6308.1	36950.	5.8575
685	725.00	-6287.3	36950.	5.8769
669	725.00	-6281.3	36950.	5.8825
940	725.00	-6099.0	36950.	6.0583
956	725.00	-6098.4	36950.	6.0590
939	725.00	-6096.6	36950.	6.0607
955	725.00	-6095.9	36950.	6.0614
800	725.00	-6080.5	36950.	6.0768
799	725.00	-6078.0	36950.	6.0793
938	725.00	-6077.7	36950.	6.0796
954	725.00	-6077.1	36950.	6.0802
244	725.00	-6068.0	36950.	6.0893
243	725.00	-6065.6	36950.	6.0917
937	725.00	-6056.0	36950.	6.1014
953	725.00	-6055.3	36950.	6.1021
206	725.00	-6052.3	36950.	6.1051
586	725.00	-6047.3	36950.	6.1102
936	725.00	-6034.2	36950.	6.1235
952	725.00	-6033.5	36950.	6.1241
205	725.00	-6025.5	36950.	6.1323
585	725.00	-6020.5	36950.	6.1374
935	725.00	-6012.4	36950.	6.1457
951	725.00	-6011.7	36950.	6.1463
204	725.00	-5998.7	36950.	6.1597
584	725.00	-5993.7	36950.	6.1648
934	725.00	-5990.6	36950.	6.1680
950	725.00	-5989.9	36950.	6.1687
203	725.00	-5971.9	36950.	6.1873
933	725.00	-5968.8	36950.	6.1905
949	725.00	-5968.1	36950.	6.1912

Table 3.AA.14 (continued)

583	725.00	-5966.9	36950.	6.1925
202	725.00	-5945.1	36950.	6.2152
582	725.00	-5940.1	36950.	6.2204
201	725.00	-5918.3	36950.	6.2433
581	725.00	-5913.3	36950.	6.2486
368	725.00	-5878.7	36950.	6.2854
367	725.00	-5876.3	36950.	6.2880
384	725.00	-5869.6	36950.	6.2952
383	725.00	-5867.1	36950.	6.2978
798	725.00	-5451.3	36950.	6.7782
242	725.00	-5438.9	36950.	6.7937
797	725.00	-5424.5	36950.	6.8116
241	725.00	-5412.1	36950.	6.8273
796	725.00	-5397.7	36950.	6.8455
240	725.00	-5385.3	36950.	6.8613
795	725.00	-5370.9	36950.	6.8796
239	725.00	-5358.5	36950.	6.8956
794	725.00	-5344.1	36950.	6.9141
238	725.00	-5331.7	36950.	6.9303
793	725.00	-5317.3	36950.	6.9490
237	725.00	-5304.9	36950.	6.9653
366	725.00	-5232.3	36950.	7.0619
382	725.00	-5224.4	36950.	7.0725
365	725.00	-5205.5	36950.	7.0982
381	725.00	-5197.6	36950.	7.1090
364	725.00	-5178.7	36950.	7.1349
380	725.00	-5170.8	36950.	7.1458
363	725.00	-5151.9	36950.	7.1721
379	725.00	-5144.0	36950.	7.1831
362	725.00	-5125.1	36950.	7.2096
378	725.00	-5117.2	36950.	7.2207
361	725.00	-5098.3	36950.	7.2475
648	725.00	-5096.1	36950.	7.2507
647	725.00	-5093.6	36950.	7.2542
412	725.00	-5091.3	36950.	7.2575
377	725.00	-5090.4	36950.	7.2587
411	725.00	-5088.9	36950.	7.2610
720	725.00	-4937.9	36950.	7.4829
912	725.00	-4937.5	36950.	7.4835
719	725.00	-4935.5	36950.	7.4866
911	725.00	-4935.1	36950.	7.4872
544	725.00	-4906.3	36950.	7.5311
543	725.00	-4903.9	36950.	7.5349
76	725.00	-4894.0	36950.	7.5500
75	725.00	-4891.6	36950.	7.5538
164	725.00	-4765.3	36950.	7.7540
163	725.00	-4762.9	36950.	7.7579
324	725.00	-4760.7	36950.	7.7615
323	725.00	-4758.2	36950.	7.7655
646	725.00	-4439.4	36950.	8.3232
410	725.00	-4434.0	36950.	8.3332
645	725.00	-4412.6	36950.	8.3737
409	725.00	-4407.2	36950.	8.3839

Table 3.AA.14 (continued)

644	725.00	-4385.8	36950.	8.4249
408	725.00	-4380.4	36950.	8.4352
643	725.00	-4359.0	36950.	8.4767
407	725.00	-4353.6	36950.	8.4871
642	725.00	-4332.2	36950.	8.5291
406	725.00	-4326.8	36950.	8.5397
641	725.00	-4305.4	36950.	8.5822
405	725.00	-4300.0	36950.	8.5929
542	725.00	-4275.8	36950.	8.6416
74	725.00	-4262.9	36950.	8.6678
541	725.00	-4249.0	36950.	8.6961
718	725.00	-4244.7	36950.	8.7051
910	725.00	-4244.0	36950.	8.7065
73	725.00	-4236.1	36950.	8.7226
540	725.00	-4222.2	36950.	8.7513
717	725.00	-4217.9	36950.	8.7604
909	725.00	-4217.2	36950.	8.7618
72	725.00	-4209.3	36950.	8.7782
539	725.00	-4195.4	36950.	8.8072
716	725.00	-4191.1	36950.	8.8164
908	725.00	-4190.4	36950.	8.8179
71	725.00	-4182.5	36950.	8.8344
538	725.00	-4168.6	36950.	8.8638
715	725.00	-4164.3	36950.	8.8731
907	725.00	-4163.6	36950.	8.8746
70	725.00	-4155.7	36950.	8.8914
537	725.00	-4141.8	36950.	8.9212
714	725.00	-4137.5	36950.	8.9306
906	725.00	-4136.8	36950.	8.9321
69	725.00	-4128.9	36950.	8.9491
162	725.00	-4128.5	36950.	8.9500
322	725.00	-4123.9	36950.	8.9599
713	725.00	-4110.7	36950.	8.9888
905	725.00	-4110.0	36950.	8.9904
161	725.00	-4101.7	36950.	9.0085
321	725.00	-4097.1	36950.	9.0185
160	725.00	-4074.9	36950.	9.0677
320	725.00	-4070.3	36950.	9.0779
159	725.00	-4048.1	36950.	9.1277
319	725.00	-4043.5	36950.	9.1381
158	725.00	-4021.3	36950.	9.1886
318	725.00	-4016.7	36950.	9.1990
157	725.00	-3994.5	36950.	9.2502
317	725.00	-3989.9	36950.	9.2608
148	725.00	-3937.9	36950.	9.3831
147	725.00	-3935.5	36950.	9.3889
340	725.00	-3932.0	36950.	9.3972
339	725.00	-3929.6	36950.	9.4031
146	725.00	-3298.6	36950.	11.202
338	725.00	-3293.4	36950.	11.219
145	725.00	-3271.8	36950.	11.293
337	725.00	-3266.6	36950.	11.311
144	725.00	-3245.0	36950.	11.387

Table 3.AA.14 (continued)

336	725.00	-3239.8	36950.	11.405
143	725.00	-3218.2	36950.	11.482
335	725.00	-3213.0	36950.	11.500
142	725.00	-3191.4	36950.	11.578
334	725.00	-3186.2	36950.	11.597
141	725.00	-3164.6	36950.	11.676
333	725.00	-3159.4	36950.	11.695
604	725.00	-3132.6	36950.	11.795
603	725.00	-3130.1	36950.	11.805
192	725.00	-3129.5	36950.	11.807
191	725.00	-3127.1	36950.	11.816
868	725.00	-3026.8	36950.	12.208
456	725.00	-3026.7	36950.	12.208
867	725.00	-3024.3	36950.	12.218
455	725.00	-3024.3	36950.	12.218
280	725.00	-2836.7	36950.	13.026
279	725.00	-2834.3	36950.	13.037
32	725.00	-2824.4	36950.	13.082
120	725.00	-2823.0	36950.	13.089
31	725.00	-2822.0	36950.	13.094
119	725.00	-2820.5	36950.	13.100
104	725.00	-2819.9	36950.	13.103
103	725.00	-2817.5	36950.	13.114
602	725.00	-2485.4	36950.	14.867
190	725.00	-2482.3	36950.	14.885
601	725.00	-2458.6	36950.	15.029
189	725.00	-2455.5	36950.	15.048
600	725.00	-2431.8	36950.	15.194
188	725.00	-2428.7	36950.	15.214
599	725.00	-2405.0	36950.	15.364
187	725.00	-2401.9	36950.	15.384
598	725.00	-2378.2	36950.	15.537
186	725.00	-2375.1	36950.	15.557
597	725.00	-2351.4	36950.	15.714
185	725.00	-2348.3	36950.	15.735
866	725.00	-2307.3	36950.	16.015
454	725.00	-2307.0	36950.	16.017
865	725.00	-2280.5	36950.	16.203
453	725.00	-2280.2	36950.	16.205
864	725.00	-2253.7	36950.	16.396
452	725.00	-2253.4	36950.	16.398
863	725.00	-2226.9	36950.	16.593
451	725.00	-2226.6	36950.	16.595
278	725.00	-2205.5	36950.	16.754
862	725.00	-2200.1	36950.	16.795
450	725.00	-2199.8	36950.	16.797
118	725.00	-2195.1	36950.	16.833
30	725.00	-2193.7	36950.	16.843
102	725.00	-2192.7	36950.	16.851
277	725.00	-2178.7	36950.	16.960
861	725.00	-2173.3	36950.	17.002
449	725.00	-2173.0	36950.	17.004
117	725.00	-2168.3	36950.	17.041

Table 3.AA.14 (continued)

29	725.00	-2166.9	36950.	17.052
101	725.00	-2165.9	36950.	17.060
276	725.00	-2151.9	36950.	17.171
116	725.00	-2141.5	36950.	17.254
28	725.00	-2140.1	36950.	17.265
100	725.00	-2139.1	36950.	17.274
275	725.00	-2125.1	36950.	17.388
115	725.00	-2114.7	36950.	17.473
27	725.00	-2113.3	36950.	17.484
99	725.00	-2112.3	36950.	17.493
274	725.00	-2098.3	36950.	17.610
114	725.00	-2087.9	36950.	17.697
26	725.00	-2086.5	36950.	17.709
98	725.00	-2085.5	36950.	17.718
273	725.00	-2071.5	36950.	17.837
113	725.00	-2061.1	36950.	17.927
25	725.00	-2059.7	36950.	17.939
97	725.00	-2058.7	36950.	17.948
16	725.00	-1977.4	36950.	18.686
15	725.00	-1975.0	36950.	18.709
296	725.00	-1974.7	36950.	18.712
295	725.00	-1972.2	36950.	18.735
14	725.00	-1367.9	36950.	27.012
294	725.00	-1365.8	36950.	27.053
13	725.00	-1341.1	36950.	27.552
293	725.00	-1339.0	36950.	27.595
12	725.00	-1314.3	36950.	28.114
292	725.00	-1312.2	36950.	28.158
11	725.00	-1287.5	36950.	28.699
291	725.00	-1285.4	36950.	28.745
10	725.00	-1260.7	36950.	29.309
290	725.00	-1258.6	36950.	29.357
9	725.00	-1233.9	36950.	29.945
289	725.00	-1231.8	36950.	29.996
39	725.00	1160.9	36950.	31.829
297	725.00	1160.2	36950.	31.847
40	725.00	1157.8	36950.	31.913
298	725.00	1157.2	36950.	31.931
561	725.00	1141.0	36950.	32.383
83	725.00	1140.3	36950.	32.403
562	725.00	1138.0	36950.	32.470
84	725.00	1137.3	36950.	32.490
41	725.00	1130.5	36950.	32.686
299	725.00	1129.8	36950.	32.705
33	725.00	1126.1	36950.	32.812
303	725.00	1125.4	36950.	32.834
568	725.00	1124.5	36950.	32.859
78	725.00	1123.8	36950.	32.879
127	725.00	1123.3	36950.	32.893
121	725.00	1123.3	36950.	32.894
34	725.00	1123.3	36950.	32.894
304	725.00	1122.5	36950.	32.917
128	725.00	1120.3	36950.	32.983

Table 3.AA.14 (continued)

122	725.00	1120.2	36950.	32.984
1056	725.00	-1117.6	36950.	33.060
786	725.00	-1117.1	36950.	33.077
165	725.00	1115.9	36950.	33.112
347	725.00	1115.3	36950.	33.131
825	725.00	1113.8	36950.	33.175
259	725.00	1113.8	36950.	33.175
166	725.00	1112.9	36950.	33.203
605	725.00	1112.3	36950.	33.219
348	725.00	1112.2	36950.	33.222
171	725.00	1112.1	36950.	33.226
215	725.00	1111.6	36950.	33.241
341	725.00	1111.5	36950.	33.244
826	725.00	1110.7	36950.	33.266
260	725.00	1110.7	36950.	33.267
563	725.00	1110.6	36950.	33.270
85	725.00	1109.9	36950.	33.291
606	725.00	1109.2	36950.	33.311
172	725.00	1109.0	36950.	33.318
216	725.00	1108.5	36950.	33.332
342	725.00	1108.4	36950.	33.336
569	725.00	1105.9	36950.	33.411
385	725.00	1105.3	36950.	33.428
391	725.00	1105.3	36950.	33.431
79	725.00	1105.2	36950.	33.432
611	725.00	1103.3	36950.	33.491
42	725.00	1103.1	36950.	33.496
209	725.00	1102.5	36950.	33.515
300	725.00	1102.5	36950.	33.516
386	725.00	1102.3	36950.	33.521
392	725.00	1102.2	36950.	33.523
612	725.00	1100.2	36950.	33.584
210	725.00	1099.4	36950.	33.608
655	725.00	1096.0	36950.	33.712
35	725.00	1095.9	36950.	33.715
305	725.00	1095.2	36950.	33.739
429	725.00	1094.6	36950.	33.755
649	725.00	1094.1	36950.	33.773
831	725.00	1093.8	36950.	33.781
253	725.00	1093.7	36950.	33.783
656	725.00	1093.0	36950.	33.807
129	725.00	1092.9	36950.	33.809
123	725.00	1092.9	36950.	33.810
435	725.00	1092.6	36950.	33.818
430	725.00	1091.6	36950.	33.850
650	725.00	1091.0	36950.	33.868
832	725.00	1090.7	36950.	33.876
254	725.00	1090.7	36950.	33.878
1055	725.00	-1090.3	36950.	33.890
785	725.00	-1089.7	36950.	33.908
436	725.00	1089.6	36950.	33.913
869	725.00	1087.7	36950.	33.970
479	725.00	1087.0	36950.	33.993

Table 3.AA.14 (continued)

167	725.00	1085.5	36950.	34.040
349	725.00	1084.9	36950.	34.060
870	725.00	1084.7	36950.	34.066
534	725.00	-1084.5	36950.	34.071
480	725.00	1083.9	36950.	34.089
827	725.00	1083.4	36950.	34.106
261	725.00	1083.4	36950.	34.107
66	725.00	-1083.4	36950.	34.107
564	725.00	1083.2	36950.	34.110
875	725.00	1083.2	36950.	34.110
473	725.00	1082.6	36950.	34.132
86	725.00	1082.6	36950.	34.132
607	725.00	1081.9	36950.	34.153
173	725.00	1081.7	36950.	34.160
699	725.00	1081.2	36950.	34.174
693	725.00	1081.2	36950.	34.175
217	725.00	1081.2	36950.	34.176
343	725.00	1081.0	36950.	34.180
876	725.00	1080.2	36950.	34.207
743	725.00	1080.0	36950.	34.214
474	725.00	1079.5	36950.	34.229
913	725.00	1079.2	36950.	34.238
570	725.00	1078.6	36950.	34.258
700	725.00	1078.2	36950.	34.271
694	725.00	1078.1	36950.	34.272
80	725.00	1077.9	36950.	34.281
560	725.00	-1077.1	36950.	34.305
744	725.00	1076.9	36950.	34.312
914	725.00	1076.2	36950.	34.335
60	725.00	-1075.8	36950.	34.348
43	725.00	1075.8	36950.	34.348
301	725.00	1075.1	36950.	34.369
387	725.00	1074.9	36950.	34.374
393	725.00	1074.9	36950.	34.377
559	725.00	-1074.7	36950.	34.383
59	725.00	-1073.3	36950.	34.425
613	725.00	1072.9	36950.	34.440
211	725.00	1072.1	36950.	34.466
36	725.00	1068.6	36950.	34.578
306	725.00	1067.8	36950.	34.603
657	725.00	1065.6	36950.	34.674
130	725.00	1065.6	36950.	34.677
124	725.00	1065.5	36950.	34.678
737	725.00	1065.5	36950.	34.680
919	725.00	1064.7	36950.	34.704
431	725.00	1064.2	36950.	34.720
651	725.00	1063.6	36950.	34.739
833	725.00	1063.4	36950.	34.748
255	725.00	1063.3	36950.	34.749
1054	725.00	-1062.9	36950.	34.762
738	725.00	1062.4	36950.	34.780
784	725.00	-1062.4	36950.	34.781
437	725.00	1062.2	36950.	34.786

Table 3.AA.14 (continued)

920	725.00	1061.6	36950.	34.804
963	725.00	1061.3	36950.	34.815
957	725.00	1061.3	36950.	34.816
964	725.00	1058.3	36950.	34.915
958	725.00	1058.2	36950.	34.917
168	725.00	1058.1	36950.	34.920
533	725.00	-1057.7	36950.	34.934
350	725.00	1057.5	36950.	34.941
871	725.00	1057.3	36950.	34.947
481	725.00	1056.6	36950.	34.972
65	725.00	-1056.6	36950.	34.972
828	725.00	1056.0	36950.	34.990
262	725.00	1056.0	36950.	34.990
565	725.00	1055.9	36950.	34.994
558	725.00	-1055.8	36950.	34.997
87	725.00	1055.2	36950.	35.017
608	725.00	1054.5	36950.	35.039
58	725.00	-1054.5	36950.	35.041
174	725.00	1054.3	36950.	35.047
218	725.00	1053.8	36950.	35.063
344	725.00	1053.7	36950.	35.067
877	725.00	1052.8	36950.	35.096
475	725.00	1052.1	36950.	35.119
571	725.00	1051.2	36950.	35.150
701	725.00	1050.8	36950.	35.163
695	725.00	1050.8	36950.	35.164
81	725.00	1050.5	36950.	35.173
745	725.00	1049.5	36950.	35.206
915	725.00	1048.8	36950.	35.230
44	725.00	1048.4	36950.	35.244
302	725.00	1047.7	36950.	35.266
388	725.00	1047.6	36950.	35.272
394	725.00	1047.5	36950.	35.274
614	725.00	1045.5	36950.	35.341
212	725.00	1044.7	36950.	35.368
37	725.00	1041.2	36950.	35.487
307	725.00	1040.5	36950.	35.513
658	725.00	1038.3	36950.	35.588
131	725.00	1038.2	36950.	35.590
125	725.00	1038.2	36950.	35.592
432	725.00	1036.9	36950.	35.636
652	725.00	1036.3	36950.	35.656
834	725.00	1036.0	36950.	35.665
256	725.00	1036.0	36950.	35.667
1053	725.00	-1035.6	36950.	35.681
739	725.00	1035.0	36950.	35.699
783	725.00	-1035.0	36950.	35.700
438	725.00	1034.8	36950.	35.706
921	725.00	1034.3	36950.	35.725
557	725.00	-1034.0	36950.	35.735
57	725.00	-1032.7	36950.	35.781
965	725.00	1030.9	36950.	35.842
532	725.00	-1030.9	36950.	35.842

Table 3.AA.14 (continued)

959	725.00	1030.9	36950.	35.843
169	725.00	1030.8	36950.	35.847
351	725.00	1030.1	36950.	35.869
872	725.00	1029.9	36950.	35.876
64	725.00	-1029.8	36950.	35.882
482	725.00	1029.2	36950.	35.901
829	725.00	1028.7	36950.	35.920
263	725.00	1028.7	36950.	35.921
566	725.00	1028.5	36950.	35.925
236	725.00	-1028.0	36950.	35.944
824	725.00	-1027.9	36950.	35.947
88	725.00	1027.8	36950.	35.949
609	725.00	1027.2	36950.	35.972
175	725.00	1027.0	36950.	35.980
219	725.00	1026.5	36950.	35.998
345	725.00	1026.3	36950.	36.002
235	725.00	-1025.6	36950.	36.029
823	725.00	-1025.5	36950.	36.032
878	725.00	1025.5	36950.	36.032
476	725.00	1024.8	36950.	36.056
572	725.00	1023.9	36950.	36.089
702	725.00	1023.5	36950.	36.103
696	725.00	1023.4	36950.	36.104
82	725.00	1023.2	36950.	36.114
746	725.00	1022.2	36950.	36.148
916	725.00	1021.5	36950.	36.174
389	725.00	1020.2	36950.	36.218
395	725.00	1020.1	36950.	36.220
615	725.00	1018.2	36950.	36.291
213	725.00	1017.4	36950.	36.319
38	725.00	1013.9	36950.	36.445
308	725.00	1013.1	36950.	36.472
556	725.00	-1012.2	36950.	36.504
659	725.00	1010.9	36950.	36.551
56	725.00	-1010.9	36950.	36.552
132	725.00	1010.8	36950.	36.553
126	725.00	1010.8	36950.	36.555
433	725.00	1009.5	36950.	36.602
653	725.00	1008.9	36950.	36.623
835	725.00	1008.7	36950.	36.632
257	725.00	1008.6	36950.	36.634
1052	725.00	-1008.2	36950.	36.649
740	725.00	1007.7	36950.	36.668
782	725.00	-1007.7	36950.	36.669
439	725.00	1007.5	36950.	36.675
922	725.00	1006.9	36950.	36.695
234	725.00	-1006.7	36950.	36.704
822	725.00	-1006.6	36950.	36.707
531	725.00	-1004.1	36950.	36.799
966	725.00	1003.6	36950.	36.819
960	725.00	1003.5	36950.	36.821
170	725.00	1003.4	36950.	36.824
63	725.00	-1003.0	36950.	36.841

Table 3.AA.14 (continued)

352	725.00	1002.8	36950.	36.848
873	725.00	1002.6	36950.	36.854
483	725.00	1001.9	36950.	36.882
830	725.00	1001.3	36950.	36.901
264	725.00	1001.3	36950.	36.902
610	725.00	999.82	36950.	36.957
176	725.00	999.59	36950.	36.965
220	725.00	999.10	36950.	36.983
346	725.00	998.98	36950.	36.988
879	725.00	998.12	36950.	37.020
477	725.00	997.44	36950.	37.045
703	725.00	996.11	36950.	37.094
697	725.00	996.07	36950.	37.096
747	725.00	994.83	36950.	37.142
1006	725.00	-994.76	36950.	37.145
917	725.00	994.09	36950.	37.169
390	725.00	992.86	36950.	37.216
396	725.00	992.79	36950.	37.218
528	725.00	-992.20	36950.	37.240
616	725.00	990.81	36950.	37.293
555	725.00	-990.44	36950.	37.307
214	725.00	990.02	36950.	37.323
55	725.00	-989.10	36950.	37.357
233	725.00	-984.91	36950.	37.516
821	725.00	-984.82	36950.	37.519
660	725.00	983.56	36950.	37.568
434	725.00	982.16	36950.	37.621
654	725.00	981.57	36950.	37.644
836	725.00	981.31	36950.	37.654
258	725.00	981.26	36950.	37.656
1051	725.00	-980.87	36950.	37.671
741	725.00	980.33	36950.	37.691
781	725.00	-980.30	36950.	37.692
440	725.00	980.13	36950.	37.699
923	725.00	979.58	36950.	37.720
530	725.00	-977.31	36950.	37.808
967	725.00	976.21	36950.	37.850
961	725.00	976.16	36950.	37.852
62	725.00	-976.16	36950.	37.853
874	725.00	975.23	36950.	37.888
484	725.00	974.50	36950.	37.917
880	725.00	970.76	36950.	38.063
478	725.00	970.08	36950.	38.090
704	725.00	968.75	36950.	38.142
698	725.00	968.71	36950.	38.143
554	725.00	-968.65	36950.	38.146
748	725.00	967.47	36950.	38.192
1005	725.00	-967.40	36950.	38.195
54	725.00	-967.31	36950.	38.199
918	725.00	966.74	36950.	38.221
527	725.00	-964.85	36950.	38.296
232	725.00	-963.12	36950.	38.365
820	725.00	-963.04	36950.	38.368

Table 3.AA.14 (continued)

742	725.00	952.97	36950.	38.773
924	725.00	952.22	36950.	38.804
529	725.00	-950.51	36950.	38.874
61	725.00	-949.36	36950.	38.921
968	725.00	948.85	36950.	38.942
962	725.00	948.80	36950.	38.944
231	725.00	-941.33	36950.	39.253
819	725.00	-941.25	36950.	39.256
1004	725.00	-940.05	36950.	39.307
526	725.00	-937.49	36950.	39.414
230	725.00	-919.55	36950.	40.183
818	725.00	-919.46	36950.	40.187
1003	725.00	-912.69	36950.	40.485
525	725.00	-910.13	36950.	40.598
791	725.00	-909.87	36950.	40.610
1049	725.00	-905.53	36950.	40.805
1057	725.00	-903.83	36950.	40.881
1058	725.00	-902.90	36950.	40.923
229	725.00	-897.76	36950.	41.158
817	725.00	-897.67	36950.	41.162
288	725.00	-895.08	36950.	41.281
8	725.00	-893.69	36950.	41.345
287	725.00	-892.64	36950.	41.394
7	725.00	-891.25	36950.	41.458
1002	725.00	-885.33	36950.	41.736
524	725.00	-882.78	36950.	41.857
96	725.00	-874.15	36950.	42.270
95	725.00	-871.72	36950.	42.388
792	725.00	-867.81	36950.	42.578
790	725.00	-866.75	36950.	42.630
1048	725.00	-862.41	36950.	42.845
1050	725.00	-861.88	36950.	42.871
112	725.00	-861.76	36950.	42.877
111	725.00	-859.32	36950.	42.999
1001	725.00	-857.98	36950.	43.066
523	725.00	-855.42	36950.	43.195
789	725.00	-839.40	36950.	44.020
1047	725.00	-835.05	36950.	44.249
272	725.00	-831.70	36950.	44.427
24	725.00	-830.47	36950.	44.493
271	725.00	-829.26	36950.	44.558
23	725.00	-828.04	36950.	44.624
788	725.00	-812.04	36950.	45.503
1046	725.00	-807.69	36950.	45.748
787	725.00	-784.68	36950.	47.089
1045	725.00	-780.34	36950.	47.351
286	725.00	-276.55	36950.	133.61
6	725.00	-275.85	36950.	133.95
270	725.00	-274.34	36950.	134.69
22	725.00	-273.63	36950.	135.04
94	725.00	-253.56	36950.	145.73
285	725.00	-249.75	36950.	147.95
5	725.00	-249.05	36950.	148.36

Table 3.AA.14 (continued)

269	725.00	-247.54	36950.	149.27
21	725.00	-246.83	36950.	149.70
110	725.00	-241.20	36950.	153.19
93	725.00	-226.76	36950.	162.95
284	725.00	-222.95	36950.	165.73
4	725.00	-222.25	36950.	166.25
268	725.00	-220.74	36950.	167.39
20	725.00	-220.03	36950.	167.93
109	725.00	-214.40	36950.	172.34
92	725.00	-199.96	36950.	184.79
283	725.00	-196.15	36950.	188.37
3	725.00	-195.45	36950.	189.05
267	725.00	-193.94	36950.	190.53
19	725.00	-193.23	36950.	191.22
108	725.00	-187.60	36950.	196.96
91	725.00	-173.16	36950.	213.39
282	725.00	-169.35	36950.	218.18
2	725.00	-168.65	36950.	219.09
266	725.00	-167.14	36950.	221.08
18	725.00	-166.43	36950.	222.02
1062	725.00	-165.23	36950.	223.63
1060	725.00	-164.89	36950.	224.08
107	725.00	-160.80	36950.	229.79
90	725.00	-146.36	36950.	252.46
281	725.00	-142.55	36950.	259.20
1	725.00	-141.85	36950.	260.48
265	725.00	-140.34	36950.	263.29
17	725.00	-139.63	36950.	264.63
106	725.00	-134.00	36950.	275.75
89	725.00	-119.56	36950.	309.05
1012	725.00	-108.02	36950.	342.08
522	725.00	-107.25	36950.	344.51
105	725.00	-107.20	36950.	344.69
77	725.00	100.72	36950.	366.86
567	725.00	99.939	36950.	369.73
1011	725.00	-80.660	36950.	458.10
521	725.00	-79.898	36950.	462.47
1010	725.00	-53.303	36950.	693.20
520	725.00	-52.541	36950.	703.26
1059	725.00	-33.642	36950.	1098.3
517	725.00	33.588	36950.	1100.1
1061	725.00	-33.585	36950.	1100.2
1007	725.00	32.826	36950.	1125.6
518	725.00	30.529	36950.	1210.3
1008	725.00	29.766	36950.	1241.3
1009	725.00	25.947	36950.	1424.1
519	725.00	25.185	36950.	1467.2

Table 3.AA.15

TITLE=
MPC-24 Structural Analysis

SUBTITLE 1 =
Component: Fuel Basket
SUBTITLE 2 =
Load Combination: F3.c (See Table 3.1.3)
SUBTITLE 3 =
Stress Result: Primary Local Plus Primary Bending (PL+PB)

PRINT ELEMENT TABLE ITEMS PER ELEMENT

STAT ELEM	CURRENT REF TEMP	CURRENT PL+PB	PREVIOUS ALLOW	PREVIOUS SF
632	725.00	43103.	55450.	1.2865
428	725.00	43012.	55450.	1.2892
16	725.00	42935.	55450.	1.2915
296	725.00	42923.	55450.	1.2919
588	725.00	42524.	55450.	1.3040
208	725.00	42442.	55450.	1.3065
676	725.00	41062.	55450.	1.3504
692	725.00	41030.	55450.	1.3514
384	725.00	41014.	55450.	1.3520
32	725.00	40974.	55450.	1.3533
368	725.00	40945.	55450.	1.3543
280	725.00	40900.	55450.	1.3557
44	725.00	40812.	55450.	1.3587
38	725.00	40778.	55450.	1.3598
302	725.00	40744.	55450.	1.3609
308	725.00	40709.	55450.	1.3621
808	725.00	40455.	55450.	1.3707
252	725.00	40443.	55450.	1.3711
566	725.00	40163.	55450.	1.3806
572	725.00	40158.	55450.	1.3808
88	725.00	40099.	55450.	1.3828
82	725.00	40094.	55450.	1.3830
164	725.00	40072.	55450.	1.3838
324	725.00	40005.	55450.	1.3861
132	725.00	39650.	55450.	1.3985
126	725.00	39650.	55450.	1.3985
604	725.00	39385.	55450.	1.4079
192	725.00	39376.	55450.	1.4082
631	725.00	39335.	55450.	1.4097
427	725.00	39248.	55450.	1.4128
148	725.00	39027.	55450.	1.4208
340	725.00	38995.	55450.	1.4220
170	725.00	38868.	55450.	1.4266
176	725.00	38864.	55450.	1.4268
352	725.00	38807.	55450.	1.4289
346	725.00	38803.	55450.	1.4290
648	725.00	38740.	55450.	1.4313
587	725.00	38672.	55450.	1.4339
412	725.00	38626.	55450.	1.4356

Table 3.AA.15 (continued)

104	725.00	38619.	55450.	1.4358
207	725.00	38600.	55450.	1.4365
120	725.00	38583.	55450.	1.4372
15	725.00	38521.	55450.	1.4395
295	725.00	38506.	55450.	1.4401
544	725.00	38195.	55450.	1.4518
76	725.00	38114.	55450.	1.4548
610	725.00	38050.	55450.	1.4573
616	725.00	38041.	55450.	1.4576
220	725.00	37981.	55450.	1.4599
214	725.00	37972.	55450.	1.4603
8	725.00	37966.	55450.	1.4605
288	725.00	37940.	55450.	1.4615
390	725.00	37920.	55450.	1.4623
396	725.00	37920.	55450.	1.4623
675	725.00	37391.	55450.	1.4830
691	725.00	37365.	55450.	1.4840
383	725.00	37172.	55450.	1.4917
96	725.00	37123.	55450.	1.4937
367	725.00	37112.	55450.	1.4941
112	725.00	37096.	55450.	1.4948
830	725.00	37064.	55450.	1.4960
264	725.00	37062.	55450.	1.4962
836	725.00	37044.	55450.	1.4969
258	725.00	37042.	55450.	1.4970
660	725.00	37012.	55450.	1.4981
654	725.00	37010.	55450.	1.4982
31	725.00	36957.	55450.	1.5004
279	725.00	36889.	55450.	1.5031
434	725.00	36879.	55450.	1.5036
440	725.00	36877.	55450.	1.5036
807	725.00	36746.	55450.	1.5090
251	725.00	36738.	55450.	1.5093
1012	725.00	36569.	55450.	1.5163
522	725.00	36476.	55450.	1.5202
163	725.00	36174.	55450.	1.5329
323	725.00	36109.	55450.	1.5356
874	725.00	35909.	55450.	1.5442
880	725.00	35905.	55450.	1.5444
472	725.00	35851.	55450.	1.5467
852	725.00	35846.	55450.	1.5469
484	725.00	35841.	55450.	1.5471
478	725.00	35836.	55450.	1.5473
704	725.00	35745.	55450.	1.5512
698	725.00	35745.	55450.	1.5512
603	725.00	35434.	55450.	1.5649
191	725.00	35426.	55450.	1.5652
147	725.00	35159.	55450.	1.5771
339	725.00	35124.	55450.	1.5787
647	725.00	35004.	55450.	1.5841
411	725.00	34897.	55450.	1.5890
103	725.00	34661.	55450.	1.5998
119	725.00	34629.	55450.	1.6013

Table 3.AA.15 (continued)

748	725.00	34523.	55450.	1.6062
742	725.00	34509.	55450.	1.6068
918	725.00	34455.	55450.	1.6093
924	725.00	34441.	55450.	1.6100
543	725.00	34303.	55450.	1.6165
75	725.00	34229.	55450.	1.6200
736	725.00	34093.	55450.	1.6264
896	725.00	34078.	55450.	1.6272
7	725.00	33868.	55450.	1.6373
287	725.00	33847.	55450.	1.6383
95	725.00	33105.	55450.	1.6750
111	725.00	33078.	55450.	1.6764
968	725.00	33045.	55450.	1.6780
962	725.00	33045.	55450.	1.6780
471	725.00	32355.	55450.	1.7138
851	725.00	32354.	55450.	1.7138
1006	725.00	31814.	55450.	1.7430
528	725.00	31786.	55450.	1.7445
735	725.00	30703.	55450.	1.8060
895	725.00	30688.	55450.	1.8069
786	725.00	29695.	55450.	1.8673
719	725.00	29645.	55450.	1.8705
1056	725.00	29609.	55450.	1.8727
911	725.00	29560.	55450.	1.8758
792	725.00	29446.	55450.	1.8831
1050	725.00	29353.	55450.	1.8891
867	725.00	28193.	55450.	1.9668
455	725.00	28109.	55450.	1.9727
24	725.00	26328.	55450.	2.1061
272	725.00	26268.	55450.	2.1109
800	725.00	24080.	55450.	2.3028
244	725.00	24076.	55450.	2.3031
734	725.00	23681.	55450.	2.3416
894	725.00	23680.	55450.	2.3416
554	725.00	23032.	55450.	2.4075
54	725.00	22997.	55450.	2.4112
798	725.00	22809.	55450.	2.4311
242	725.00	22791.	55450.	2.4330
560	725.00	22605.	55450.	2.4530
60	725.00	22573.	55450.	2.4565
850	725.00	22513.	55450.	2.4630
23	725.00	22461.	55450.	2.4687
470	725.00	22456.	55450.	2.4693
791	725.00	22442.	55450.	2.4708
1049	725.00	22410.	55450.	2.4743
271	725.00	22407.	55450.	2.4747
523	725.00	22356.	55450.	2.4804
1001	725.00	22331.	55450.	2.4831
1062	725.00	22243.	55450.	2.4929
1060	725.00	22210.	55450.	2.4967
35	725.00	22029.	55450.	2.5172
36	725.00	22029.	55450.	2.5172
305	725.00	22021.	55450.	2.5180

Table 3.AA.15 (continued)

306	725.00	22021.	55450.	2.5180
559	725.00	21511.	55450.	2.5778
59	725.00	21480.	55450.	2.5815
1051	725.00	21476.	55450.	2.5819
781	725.00	21379.	55450.	2.5937
1045	725.00	20709.	55450.	2.6776
787	725.00	20681.	55450.	2.6812
799	725.00	20680.	55450.	2.6813
243	725.00	20676.	55450.	2.6818
569	725.00	20419.	55450.	2.7156
570	725.00	20419.	55450.	2.7156
79	725.00	20403.	55450.	2.7177
80	725.00	20403.	55450.	2.7177
733	725.00	20382.	55450.	2.7206
893	725.00	20372.	55450.	2.7219
255	725.00	20365.	55450.	2.7228
256	725.00	20365.	55450.	2.7228
833	725.00	20365.	55450.	2.7229
834	725.00	20365.	55450.	2.7229
977	725.00	20080.	55450.	2.7614
509	725.00	20025.	55450.	2.7690
849	725.00	20018.	55450.	2.7700
469	725.00	19977.	55450.	2.7757
563	725.00	19894.	55450.	2.7873
564	725.00	19894.	55450.	2.7873
85	725.00	19877.	55450.	2.7896
86	725.00	19877.	55450.	2.7896
61	725.00	19508.	55450.	2.8424
978	725.00	19478.	55450.	2.8468
510	725.00	19425.	55450.	2.8546
529	725.00	19422.	55450.	2.8550
889	725.00	19346.	55450.	2.8662
729	725.00	19317.	55450.	2.8706
614	725.00	19217.	55450.	2.8855
613	725.00	19217.	55450.	2.8855
211	725.00	19203.	55450.	2.8876
212	725.00	19203.	55450.	2.8876
524	725.00	19158.	55450.	2.8943
1002	725.00	19135.	55450.	2.8978
773	725.00	19122.	55450.	2.8999
1021	725.00	19110.	55450.	2.9016
555	725.00	19063.	55450.	2.9088
55	725.00	19035.	55450.	2.9130
739	725.00	19010.	55450.	2.9169
740	725.00	19010.	55450.	2.9169
922	725.00	18994.	55450.	2.9194
921	725.00	18994.	55450.	2.9194
229	725.00	18904.	55450.	2.9333
123	725.00	18897.	55450.	2.9343
124	725.00	18897.	55450.	2.9343
817	725.00	18894.	55450.	2.9347
130	725.00	18893.	55450.	2.9349
129	725.00	18893.	55450.	2.9349

Table 3.AA.15 (continued)

793	725.00	18890.	55450.	2.9354
237	725.00	18860.	55450.	2.9401
174	725.00	18820.	55450.	2.9464
173	725.00	18820.	55450.	2.9464
343	725.00	18807.	55450.	2.9484
344	725.00	18807.	55450.	2.9484
774	725.00	18613.	55450.	2.9792
797	725.00	18603.	55450.	2.9807
1022	725.00	18601.	55450.	2.9810
241	725.00	18589.	55450.	2.9829
394	725.00	18554.	55450.	2.9886
393	725.00	18554.	55450.	2.9886
387	725.00	18546.	55450.	2.9899
388	725.00	18546.	55450.	2.9899
878	725.00	18528.	55450.	2.9927
877	725.00	18528.	55450.	2.9927
890	725.00	18519.	55450.	2.9943
62	725.00	18518.	55450.	2.9943
475	725.00	18512.	55450.	2.9954
476	725.00	18512.	55450.	2.9954
230	725.00	18511.	55450.	2.9956
818	725.00	18502.	55450.	2.9970
730	725.00	18490.	55450.	2.9990
530	725.00	18435.	55450.	3.0079
167	725.00	18390.	55450.	3.0153
168	725.00	18390.	55450.	3.0153
651	725.00	18387.	55450.	3.0157
652	725.00	18387.	55450.	3.0157
349	725.00	18380.	55450.	3.0168
350	725.00	18380.	55450.	3.0168
437	725.00	18359.	55450.	3.0203
438	725.00	18359.	55450.	3.0203
960	725.00	18356.	55450.	3.0208
959	725.00	18356.	55450.	3.0208
966	725.00	18350.	55450.	3.0217
965	725.00	18350.	55450.	3.0217
1052	725.00	18251.	55450.	3.0383
607	725.00	18206.	55450.	3.0458
608	725.00	18206.	55450.	3.0458
217	725.00	18183.	55450.	3.0496
218	725.00	18183.	55450.	3.0496
658	725.00	18164.	55450.	3.0527
657	725.00	18164.	55450.	3.0527
782	725.00	18157.	55450.	3.0540
41	725.00	18153.	55450.	3.0547
42	725.00	18153.	55450.	3.0547
299	725.00	18133.	55450.	3.0580
300	725.00	18133.	55450.	3.0580
431	725.00	18131.	55450.	3.0582
432	725.00	18131.	55450.	3.0582
828	725.00	18119.	55450.	3.0604
827	725.00	18119.	55450.	3.0604
262	725.00	18116.	55450.	3.0609

Table 3.AA.15 (continued)

261	725.00	18116.	55450.	3.0609
236	725.00	18032.	55450.	3.0751
872	725.00	18026.	55450.	3.0761
871	725.00	18026.	55450.	3.0761
481	725.00	18016.	55450.	3.0778
482	725.00	18016.	55450.	3.0778
824	725.00	18007.	55450.	3.0794
794	725.00	17962.	55450.	3.0871
34	725.00	17958.	55450.	3.0878
695	725.00	17950.	55450.	3.0892
696	725.00	17950.	55450.	3.0892
702	725.00	17945.	55450.	3.0900
701	725.00	17945.	55450.	3.0900
238	725.00	17932.	55450.	3.0922
304	725.00	17925.	55450.	3.0934
506	725.00	17803.	55450.	3.1146
845	725.00	17756.	55450.	3.1229
974	725.00	17730.	55450.	3.1274
465	725.00	17700.	55450.	3.1328
1046	725.00	17634.	55450.	3.1445
788	725.00	17608.	55450.	3.1492
250	725.00	17525.	55450.	3.1640
806	725.00	17473.	55450.	3.1735
746	725.00	17382.	55450.	3.1901
745	725.00	17382.	55450.	3.1901
916	725.00	17364.	55450.	3.1934
915	725.00	17364.	55450.	3.1934
1009	725.00	17228.	55450.	3.2185
1010	725.00	17228.	55450.	3.2185
519	725.00	17220.	55450.	3.2202
520	725.00	17220.	55450.	3.2202
501	725.00	17141.	55450.	3.2350
235	725.00	17139.	55450.	3.2353
823	725.00	17115.	55450.	3.2399
969	725.00	17076.	55450.	3.2473
846	725.00	17019.	55450.	3.2581
466	725.00	16965.	55450.	3.2686
848	725.00	16613.	55450.	3.3378
468	725.00	16588.	55450.	3.3428
502	725.00	16517.	55450.	3.3571
970	725.00	16455.	55450.	3.3698
249	725.00	16396.	55450.	3.3819
805	725.00	16358.	55450.	3.3897
505	725.00	16324.	55450.	3.3968
973	725.00	16275.	55450.	3.4071
732	725.00	16172.	55450.	3.4288
892	725.00	16154.	55450.	3.4327
783	725.00	15821.	55450.	3.5047
784	725.00	15821.	55450.	3.5047
1054	725.00	15801.	55450.	3.5093
1053	725.00	15801.	55450.	3.5093
690	725.00	15759.	55450.	3.5187
674	725.00	15698.	55450.	3.5322

Table 3.AA.15 (continued)

568	725.00	15598.	55450.	3.5550
78	725.00	15556.	55450.	3.5646
913	725.00	15353.	55450.	3.6116
743	725.00	15277.	55450.	3.6296
66	725.00	14987.	55450.	3.6998
534	725.00	14926.	55450.	3.7151
562	725.00	14896.	55450.	3.7224
84	725.00	14853.	55450.	3.7332
963	725.00	14604.	55450.	3.7970
979	725.00	14598.	55450.	3.7985
957	725.00	14594.	55450.	3.7995
231	725.00	14584.	55450.	3.8021
819	725.00	14581.	55450.	3.8029
511	725.00	14559.	55450.	3.8087
426	725.00	14551.	55450.	3.8108
630	725.00	14516.	55450.	3.8199
254	725.00	14516.	55450.	3.8199
832	725.00	14516.	55450.	3.8200
775	725.00	14473.	55450.	3.8312
1023	725.00	14464.	55450.	3.8337
720	725.00	14451.	55450.	3.8371
912	725.00	14445.	55450.	3.8387
689	725.00	14379.	55450.	3.8564
982	725.00	14359.	55450.	3.8618
248	725.00	14356.	55450.	3.8625
673	725.00	14343.	55450.	3.8659
804	725.00	14334.	55450.	3.8686
713	725.00	14331.	55450.	3.8692
514	725.00	14309.	55450.	3.8753
905	725.00	14223.	55450.	3.8985
714	725.00	14177.	55450.	3.9113
1003	725.00	14142.	55450.	3.9209
1004	725.00	14142.	55450.	3.9209
525	725.00	14134.	55450.	3.9230
526	725.00	14134.	55450.	3.9230
906	725.00	14074.	55450.	3.9400
257	725.00	14040.	55450.	3.9494
835	725.00	14039.	55450.	3.9498
961	725.00	14011.	55450.	3.9576
967	725.00	14007.	55450.	3.9587
77	725.00	14005.	55450.	3.9594
425	725.00	13993.	55450.	3.9627
629	725.00	13983.	55450.	3.9655
940	725.00	13981.	55450.	3.9662
956	725.00	13980.	55450.	3.9664
923	725.00	13973.	55450.	3.9683
741	725.00	13962.	55450.	3.9716
307	725.00	13943.	55450.	3.9770
567	725.00	13941.	55450.	3.9775
504	725.00	13935.	55450.	3.9792
37	725.00	13925.	55450.	3.9819
972	725.00	13909.	55450.	3.9867
245	725.00	13607.	55450.	4.0751

Table 3.AA.15 (continued)

1055	725.00	13584.	55450.	4.0821
785	725.00	13569.	55450.	4.0867
801	725.00	13568.	55450.	4.0867
796	725.00	13487.	55450.	4.1115
240	725.00	13477.	55450.	4.1143
699	725.00	13461.	55450.	4.1192
939	725.00	13460.	55450.	4.1197
955	725.00	13459.	55450.	4.1199
693	725.00	13454.	55450.	4.1216
685	725.00	13435.	55450.	4.1274
122	725.00	13408.	55450.	4.1354
128	725.00	13403.	55450.	4.1371
669	725.00	13356.	55450.	4.1517
558	725.00	13354.	55450.	4.1522
58	725.00	13333.	55450.	4.1587
790	725.00	13322.	55450.	4.1621
789	725.00	13322.	55450.	4.1621
1047	725.00	13313.	55450.	4.1652
1048	725.00	13313.	55450.	4.1652
612	725.00	13312.	55450.	4.1655
479	725.00	13293.	55450.	4.1715
210	725.00	13271.	55450.	4.1783
869	725.00	13230.	55450.	4.1912
477	725.00	13199.	55450.	4.2011
879	725.00	13187.	55450.	4.2048
81	725.00	13076.	55450.	4.2407
981	725.00	13068.	55450.	4.2433
571	725.00	13065.	55450.	4.2440
172	725.00	13051.	55450.	4.2488
410	725.00	13046.	55450.	4.2502
513	725.00	13032.	55450.	4.2550
246	725.00	13023.	55450.	4.2579
342	725.00	13014.	55450.	4.2609
802	725.00	12986.	55450.	4.2701
213	725.00	12961.	55450.	4.2783
646	725.00	12953.	55450.	4.2807
615	725.00	12948.	55450.	4.2826
917	725.00	12892.	55450.	4.3012
747	725.00	12881.	55450.	4.3047
483	725.00	12870.	55450.	4.3086
718	725.00	12854.	55450.	4.3137
873	725.00	12854.	55450.	4.3139
697	725.00	12853.	55450.	4.3141
703	725.00	12850.	55450.	4.3151
933	725.00	12837.	55450.	4.3196
949	725.00	12830.	55450.	4.3218
686	725.00	12822.	55450.	4.3245
934	725.00	12816.	55450.	4.3267
950	725.00	12809.	55450.	4.3289
40	725.00	12778.	55450.	4.3395
439	725.00	12757.	55450.	4.3467
670	725.00	12746.	55450.	4.3503
910	725.00	12743.	55450.	4.3513

Table 3.AA.15 (continued)

653	725.00	12732.	55450.	4.3552
298	725.00	12729.	55450.	4.3561
87	725.00	12727.	55450.	4.3570
565	725.00	12717.	55450.	4.3603
206	725.00	12709.	55450.	4.3632
433	725.00	12606.	55450.	4.3989
556	725.00	12597.	55450.	4.4019
586	725.00	12588.	55450.	4.4051
659	725.00	12584.	55450.	4.4064
56	725.00	12581.	55450.	4.4074
829	725.00	12548.	55450.	4.4190
395	725.00	12548.	55450.	4.4192
263	725.00	12547.	55450.	4.4194
389	725.00	12542.	55450.	4.4211
628	725.00	12539.	55450.	4.4221
919	725.00	12537.	55450.	4.4228
424	725.00	12525.	55450.	4.4272
166	725.00	12476.	55450.	4.4445
737	725.00	12464.	55450.	4.4487
348	725.00	12443.	55450.	4.4563
473	725.00	12436.	55450.	4.4589
205	725.00	12428.	55450.	4.4616
345	725.00	12426.	55450.	4.4624
1057	725.00	12420.	55450.	4.4645
175	725.00	12414.	55450.	4.4666
429	725.00	12392.	55450.	4.4748
392	725.00	12386.	55450.	4.4768
386	725.00	12375.	55450.	4.4807
1058	725.00	12375.	55450.	4.4809
914	725.00	12367.	55450.	4.4836
875	725.00	12362.	55450.	4.4856
585	725.00	12357.	55450.	4.4872
259	725.00	12355.	55450.	4.4880
825	725.00	12348.	55450.	4.4905
847	725.00	12296.	55450.	4.5095
744	725.00	12294.	55450.	4.5102
715	725.00	12290.	55450.	4.5119
467	725.00	12288.	55450.	4.5126
219	725.00	12284.	55450.	4.5141
609	725.00	12277.	55450.	4.5167
655	725.00	12247.	55450.	4.5277
907	725.00	12229.	55450.	4.5343
935	725.00	12216.	55450.	4.5390
125	725.00	12212.	55450.	4.5408
951	725.00	12211.	55450.	4.5410
131	725.00	12209.	55450.	4.5418
366	725.00	12173.	55450.	4.5552
351	725.00	12143.	55450.	4.5666
169	725.00	12129.	55450.	4.5717
688	725.00	12088.	55450.	4.5872
672	725.00	12077.	55450.	4.5912
382	725.00	12058.	55450.	4.5986
435	725.00	11998.	55450.	4.6216

Table 3.AA.15 (continued)

409	725.00	11991.	55450.	4.6244
270	725.00	11969.	55450.	4.6329
291	725.00	11966.	55450.	4.6338
290	725.00	11966.	55450.	4.6338
10	725.00	11965.	55450.	4.6343
11	725.00	11965.	55450.	4.6343
606	725.00	11960.	55450.	4.6362
645	725.00	11939.	55450.	4.6443
216	725.00	11907.	55450.	4.6567
421	725.00	11905.	55450.	4.6575
22	725.00	11891.	55450.	4.6632
738	725.00	11883.	55450.	4.6663
365	725.00	11879.	55450.	4.6677
650	725.00	11868.	55450.	4.6722
649	725.00	11861.	55450.	4.6749
920	725.00	11839.	55450.	4.6836
625	725.00	11839.	55450.	4.6836
381	725.00	11806.	55450.	4.6968
436	725.00	11787.	55450.	4.7043
289	725.00	11773.	55450.	4.7100
9	725.00	11765.	55450.	4.7130
74	725.00	11738.	55450.	4.7242
876	725.00	11695.	55450.	4.7413
542	725.00	11680.	55450.	4.7473
527	725.00	11664.	55450.	4.7541
1005	725.00	11661.	55450.	4.7551
474	725.00	11651.	55450.	4.7594
777	725.00	11645.	55450.	4.7617
1025	725.00	11636.	55450.	4.7653
891	725.00	11622.	55450.	4.7713
73	725.00	11610.	55450.	4.7760
964	725.00	11603.	55450.	4.7788
731	725.00	11602.	55450.	4.7795
958	725.00	11594.	55450.	4.7827
215	725.00	11586.	55450.	4.7861
541	725.00	11585.	55450.	4.7865
656	725.00	11570.	55450.	4.7926
521	725.00	11567.	55450.	4.7939
1011	725.00	11542.	55450.	4.8041
826	725.00	11515.	55450.	4.8156
260	725.00	11510.	55450.	4.8177
605	725.00	11501.	55450.	4.8214
430	725.00	11483.	55450.	4.8290
503	725.00	11449.	55450.	4.8430
971	725.00	11410.	55450.	4.8596
247	725.00	11405.	55450.	4.8617
803	725.00	11398.	55450.	4.8649
422	725.00	11385.	55450.	4.8704
301	725.00	11362.	55450.	4.8803
43	725.00	11353.	55450.	4.8842
626	725.00	11322.	55450.	4.8977
12	725.00	11254.	55450.	4.9270
292	725.00	11249.	55450.	4.9293

Table 3.AA.15 (continued)

204	725.00	11237.	55450.	4.9346
584	725.00	11217.	55450.	4.9436
776	725.00	11074.	55450.	5.0071
1024	725.00	11067.	55450.	5.0104
870	725.00	11024.	55450.	5.0301
385	725.00	10989.	55450.	5.0460
480	725.00	10988.	55450.	5.0464
391	725.00	10975.	55450.	5.0524
936	725.00	10876.	55450.	5.0982
952	725.00	10872.	55450.	5.1003
694	725.00	10871.	55450.	5.1006
980	725.00	10866.	55450.	5.1031
700	725.00	10865.	55450.	5.1033
517	725.00	10847.	55450.	5.1119
512	725.00	10844.	55450.	5.1133
1007	725.00	10768.	55450.	5.1495
269	725.00	10744.	55450.	5.1610
1008	725.00	10744.	55450.	5.1612
518	725.00	10703.	55450.	5.1807
21	725.00	10696.	55450.	5.1843
65	725.00	10690.	55450.	5.1872
347	725.00	10681.	55450.	5.1914
364	725.00	10675.	55450.	5.1943
533	725.00	10657.	55450.	5.2030
380	725.00	10643.	55450.	5.2099
165	725.00	10624.	55450.	5.2195
322	725.00	10597.	55450.	5.2324
540	725.00	10579.	55450.	5.2417
72	725.00	10572.	55450.	5.2449
162	725.00	10568.	55450.	5.2472
234	725.00	10540.	55450.	5.2609
822	725.00	10520.	55450.	5.2707
405	725.00	10515.	55450.	5.2733
321	725.00	10479.	55450.	5.2913
161	725.00	10464.	55450.	5.2992
641	725.00	10406.	55450.	5.3285
868	725.00	10310.	55450.	5.3783
456	725.00	10259.	55450.	5.4051
63	725.00	10227.	55450.	5.4220
627	725.00	10185.	55450.	5.4444
146	725.00	10175.	55450.	5.4499
531	725.00	10173.	55450.	5.4507
795	725.00	10167.	55450.	5.4541
338	725.00	10153.	55450.	5.4613
423	725.00	10146.	55450.	5.4654
239	725.00	10142.	55450.	5.4674
201	725.00	10126.	55450.	5.4758
866	725.00	10099.	55450.	5.4908
408	725.00	10024.	55450.	5.5316
644	725.00	10014.	55450.	5.5370
454	725.00	9992.8	55450.	5.5490
581	725.00	9980.3	55450.	5.5560
341	725.00	9943.4	55450.	5.5765

Table 3.AA.15 (continued)

406	725.00	9939.2	55450.	5.5789
820	725.00	9919.5	55450.	5.5900
232	725.00	9916.9	55450.	5.5914
297	725.00	9891.8	55450.	5.6057
171	725.00	9880.4	55450.	5.6121
642	725.00	9834.9	55450.	5.6381
209	725.00	9822.6	55450.	5.6451
39	725.00	9812.4	55450.	5.6510
611	725.00	9753.2	55450.	5.6853
954	725.00	9741.3	55450.	5.6923
938	725.00	9741.0	55450.	5.6924
601	725.00	9646.7	55450.	5.7481
602	725.00	9646.7	55450.	5.7481
189	725.00	9644.6	55450.	5.7494
190	725.00	9644.6	55450.	5.7494
202	725.00	9637.1	55450.	5.7538
13	725.00	9632.8	55450.	5.7564
293	725.00	9621.2	55450.	5.7633
145	725.00	9615.0	55450.	5.7670
337	725.00	9599.9	55450.	5.7761
582	725.00	9496.5	55450.	5.8390
716	725.00	9492.0	55450.	5.8418
908	725.00	9474.0	55450.	5.8529
320	725.00	9450.7	55450.	5.8673
160	725.00	9449.6	55450.	5.8680
127	725.00	9240.5	55450.	6.0007
121	725.00	9233.6	55450.	6.0053
583	725.00	9165.1	55450.	6.0502
203	725.00	9135.2	55450.	6.0699
361	725.00	9088.9	55450.	6.1008
377	725.00	8976.2	55450.	6.1774
671	725.00	8901.0	55450.	6.2296
687	725.00	8886.8	55450.	6.2396
600	725.00	8847.3	55450.	6.2674
188	725.00	8840.0	55450.	6.2726
937	725.00	8796.1	55450.	6.3039
953	725.00	8792.6	55450.	6.3064
861	725.00	8791.3	55450.	6.3074
862	725.00	8733.6	55450.	6.3490
449	725.00	8690.9	55450.	6.3802
539	725.00	8661.7	55450.	6.4017
450	725.00	8637.7	55450.	6.4195
71	725.00	8623.6	55450.	6.4300
362	725.00	8598.1	55450.	6.4491
141	725.00	8579.5	55450.	6.4631
379	725.00	8569.7	55450.	6.4704
363	725.00	8560.3	55450.	6.4776
333	725.00	8558.3	55450.	6.4791
268	725.00	8507.5	55450.	6.5178
378	725.00	8490.0	55450.	6.5312
20	725.00	8488.6	55450.	6.5323
253	725.00	8467.8	55450.	6.5483
831	725.00	8467.3	55450.	6.5487

Table 3.AA.15 (continued)

144	725.00	8144.8	55450.	6.8080
336	725.00	8136.0	55450.	6.8154
142	725.00	8058.9	55450.	6.8806
334	725.00	8038.4	55450.	6.8981
118	725.00	8032.0	55450.	6.9037
117	725.00	8032.0	55450.	6.9037
101	725.00	7995.7	55450.	6.9350
102	725.00	7995.7	55450.	6.9350
863	725.00	7711.4	55450.	7.1907
451	725.00	7655.7	55450.	7.2430
317	725.00	7550.6	55450.	7.3438
159	725.00	7524.6	55450.	7.3692
157	725.00	7515.9	55450.	7.3777
319	725.00	7511.3	55450.	7.3822
116	725.00	7333.0	55450.	7.5617
100	725.00	7316.2	55450.	7.5791
83	725.00	7306.3	55450.	7.5894
717	725.00	7271.1	55450.	7.6261
561	725.00	7235.0	55450.	7.6642
278	725.00	7223.3	55450.	7.6765
277	725.00	7223.3	55450.	7.6765
909	725.00	7202.7	55450.	7.6985
643	725.00	7178.9	55450.	7.7240
29	725.00	7163.7	55450.	7.7404
30	725.00	7163.7	55450.	7.7404
407	725.00	7147.1	55450.	7.7584
599	725.00	7137.2	55450.	7.7691
187	725.00	7124.8	55450.	7.7826
14	725.00	7100.6	55450.	7.8092
294	725.00	7082.7	55450.	7.8290
318	725.00	7079.4	55450.	7.8326
158	725.00	7046.3	55450.	7.8694
276	725.00	6917.1	55450.	8.0163
28	725.00	6890.6	55450.	8.0472
69	725.00	6735.6	55450.	8.2323
537	725.00	6656.3	55450.	8.3304
70	725.00	6263.4	55450.	8.8530
538	725.00	6187.7	55450.	8.9614
93	725.00	5794.8	55450.	9.5689
94	725.00	5794.8	55450.	9.5689
110	725.00	5788.1	55450.	9.5800
109	725.00	5788.1	55450.	9.5800
864	725.00	5778.5	55450.	9.5959
143	725.00	5764.0	55450.	9.6201
452	725.00	5763.1	55450.	9.6216
335	725.00	5761.5	55450.	9.6243
286	725.00	5751.7	55450.	9.6406
99	725.00	5726.0	55450.	9.6838
115	725.00	5723.4	55450.	9.6882
285	725.00	5716.6	55450.	9.6999
27	725.00	5706.8	55450.	9.7166
275	725.00	5700.3	55450.	9.7276
6	725.00	5700.1	55450.	9.7279

Table 3.AA.15 (continued)

5	725.00	5686.6	55450.	9.7511
557	725.00	5390.7	55450.	10.286
57	725.00	5386.2	55450.	10.295
865	725.00	5380.2	55450.	10.306
64	725.00	5380.2	55450.	10.306
532	725.00	5377.3	55450.	10.312
453	725.00	5314.6	55450.	10.434
92	725.00	5307.1	55450.	10.448
108	725.00	5299.0	55450.	10.464
19	725.00	5269.6	55450.	10.523
267	725.00	5259.1	55450.	10.544
265	725.00	5200.4	55450.	10.663
17	725.00	5126.3	55450.	10.817
1061	725.00	4972.6	55450.	11.151
1059	725.00	4928.5	55450.	11.251
113	725.00	4784.3	55450.	11.590
284	725.00	4770.7	55450.	11.623
4	725.00	4762.3	55450.	11.643
97	725.00	4735.7	55450.	11.709
266	725.00	4553.9	55450.	12.176
821	725.00	4517.6	55450.	12.274
598	725.00	4516.5	55450.	12.277
233	725.00	4509.5	55450.	12.296
186	725.00	4499.0	55450.	12.325
18	725.00	4483.1	55450.	12.369
114	725.00	4350.0	55450.	12.747
98	725.00	4303.6	55450.	12.884
281	725.00	4240.9	55450.	13.075
1	725.00	4180.7	55450.	13.263
185	725.00	4180.3	55450.	13.265
597	725.00	4163.3	55450.	13.319
273	725.00	3998.8	55450.	13.867
91	725.00	3908.7	55450.	14.186
107	725.00	3899.2	55450.	14.221
25	725.00	3899.0	55450.	14.222
282	725.00	3815.8	55450.	14.532
2	725.00	3757.9	55450.	14.755
26	725.00	3612.3	55450.	15.350
274	725.00	3608.4	55450.	15.367
303	725.00	2963.3	55450.	18.713
3	725.00	2927.5	55450.	18.941
283	725.00	2914.2	55450.	19.027
33	725.00	2905.2	55450.	19.086
89	725.00	2269.9	55450.	24.429
105	725.00	2257.5	55450.	24.562
90	725.00	1859.2	55450.	29.825
106	725.00	1846.7	55450.	30.027

Table 3.AA.16

TITLE=
MPC-24 Structural Analysis

SUBTITLE 1 =
Component: Enclosure Vessel
SUBTITLE 2 =
Load Combination: E3.c (See Table 3.1.4)
SUBTITLE 3 =
Stress Result: Primary Membrane (PM)

PRINT ELEMENT TABLE ITEMS PER ELEMENT

STAT ELEM	CURRENT REF TEMP	MIXED PM	PREVIOUS ALLOW	PREVIOUS SF
1232	450.00	6279.3	43450.	6.9196
1225	450.00	6275.4	43450.	6.9239
1233	450.00	6271.0	43450.	6.9288
1224	450.00	6265.9	43450.	6.9344
1234	450.00	6261.3	43450.	6.9395
1223	450.00	6255.0	43450.	6.9464
1235	450.00	6250.3	43450.	6.9516
1222	450.00	6242.9	43450.	6.9599
1236	450.00	6238.2	43450.	6.9652
1221	450.00	6229.6	43450.	6.9748
1237	450.00	6224.9	43450.	6.9801
1220	450.00	6215.2	43450.	6.9910
1238	450.00	6210.5	43450.	6.9962
1219	450.00	6200.0	43450.	7.0081
1239	450.00	6195.5	43450.	7.0131
1218	450.00	6184.0	43450.	7.0262
1240	450.00	6179.6	43450.	7.0312
1217	450.00	6166.7	43450.	7.0459
1241	450.00	6162.4	43450.	7.0508
1216	450.00	6148.5	43450.	7.0668
1242	450.00	6144.5	43450.	7.0714
1229	450.00	6133.2	43450.	7.0843
1228	450.00	6132.8	43450.	7.0848
1230	450.00	6132.8	43450.	7.0848
1231	450.00	6131.4	43450.	7.0865
1227	450.00	6131.3	43450.	7.0866
1215	450.00	6129.5	43450.	7.0886
1226	450.00	6128.8	43450.	7.0895
1243	450.00	6125.9	43450.	7.0929
1214	450.00	6109.9	43450.	7.1114
1244	450.00	6106.7	43450.	7.1152
1213	450.00	6089.8	43450.	7.1349
1245	450.00	6087.0	43450.	7.1381
1212	450.00	6069.2	43450.	7.1591
1246	450.00	6066.9	43450.	7.1618
1211	450.00	6056.9	43450.	7.1737
1210	450.00	6045.2	43450.	7.1875
1103	450.00	6044.1	43450.	7.1888
1209	450.00	6024.5	43450.	7.2122

Table 3.AA.16 (continued)

1104	450.00	6023.8	43450.	7.2131
1105	450.00	6003.4	43450.	7.2375
1208	450.00	6003.4	43450.	7.2376
1106	450.00	5983.2	43450.	7.2620
1207	450.00	5982.3	43450.	7.2631
1107	450.00	5963.3	43450.	7.2863
1206	450.00	5961.4	43450.	7.2886
1108	450.00	5943.8	43450.	7.3102
1205	450.00	5940.8	43450.	7.3139
1109	450.00	5923.8	43450.	7.3349
1204	450.00	5920.6	43450.	7.3387
1110	450.00	5912.6	43450.	7.3487
1203	450.00	5909.8	43450.	7.3522
1111	450.00	5902.3	43450.	7.3615
1202	450.00	5898.4	43450.	7.3664
1201	450.00	5883.7	43450.	7.3848
1112	450.00	5073.0	43450.	8.5649
1113	450.00	5051.6	43450.	8.6013
1200	450.00	5046.8	43450.	8.6095
1199	450.00	5024.9	43450.	8.6470
1114	450.00	5024.6	43450.	8.6475
1198	450.00	4997.5	43450.	8.6944
1115	450.00	4997.4	43450.	8.6946
1116	450.00	4970.1	43450.	8.7423
1197	450.00	4969.9	43450.	8.7426
1117	450.00	4942.6	43450.	8.7910
1196	450.00	4942.3	43450.	8.7914
1118	450.00	4915.6	43450.	8.8392
1195	450.00	4914.6	43450.	8.8410
1194	450.00	4887.4	43450.	8.8901
1119	450.00	4818.0	43450.	9.0183
1120	450.00	4791.5	43450.	9.0681
1193	450.00	4789.6	43450.	9.0718
1121	450.00	4766.4	43450.	9.1159
1192	450.00	4763.1	43450.	9.1222
1191	450.00	4738.0	43450.	9.1705
1122	450.00	4732.7	43450.	9.1808
1190	450.00	4704.4	43450.	9.2360
1157	450.00	3989.3	43450.	10.892
1156	450.00	3984.5	43450.	10.905
1158	450.00	3976.4	43450.	10.927
1155	450.00	3972.3	43450.	10.938
1147	450.00	2509.3	43450.	17.316
1166	450.00	2505.9	43450.	17.339
1123	450.00	2382.8	43450.	18.235
1124	450.00	2369.0	43450.	18.341
1189	450.00	2361.4	43450.	18.400
1188	450.00	2347.8	43450.	18.507
1125	450.00	2340.2	43450.	18.567
1187	450.00	2319.2	43450.	18.735
1126	450.00	2313.7	43450.	18.779
1186	450.00	2293.1	43450.	18.948
1127	450.00	2288.8	43450.	18.984

Table 3.AA.16 (continued)

1185	450.00	2268.5	43450.	19.153
1128	450.00	2266.2	43450.	19.173
1129	450.00	2248.2	43450.	19.327
1184	450.00	2246.3	43450.	19.343
1183	450.00	2229.4	43450.	19.489
1130	450.00	2211.7	43450.	19.645
1182	450.00	2193.5	43450.	19.809
1148	450.00	1471.8	43450.	29.522
1165	450.00	1466.4	43450.	29.630
1149	450.00	1458.8	43450.	29.785
1164	450.00	1454.7	43450.	29.869
1150	450.00	1447.7	43450.	30.013
1163	450.00	1444.9	43450.	30.071
1151	450.00	1439.9	43450.	30.175
1162	450.00	1438.4	43450.	30.206
1152	450.00	1434.4	43450.	30.292
1161	450.00	1434.3	43450.	30.294
1160	450.00	1433.3	43450.	30.315
1153	450.00	1432.1	43450.	30.340
1159	450.00	1422.7	43450.	30.541
1154	450.00	1420.1	43450.	30.597
1145	450.00	658.46	43450.	65.988
1168	450.00	655.21	43450.	66.314
1146	450.00	638.64	43450.	68.036
1167	450.00	635.78	43450.	68.342
1140	450.00	447.59	43450.	97.076
1139	450.00	443.46	43450.	97.979
1131	450.00	437.06	43450.	99.413
1173	450.00	435.43	43450.	99.786
1132	450.00	435.43	43450.	99.786
1174	450.00	431.88	43450.	100.61
1141	450.00	425.25	43450.	102.18
1181	450.00	416.92	43450.	104.22
1180	450.00	415.90	43450.	104.47
1172	450.00	412.10	43450.	105.44
1142	450.00	407.61	43450.	106.60
1133	450.00	407.13	43450.	106.72
1171	450.00	395.28	43450.	109.92
1143	450.00	394.16	43450.	110.23
1179	450.00	388.16	43450.	111.94
1134	450.00	383.77	43450.	113.22
1170	450.00	382.95	43450.	113.46
1144	450.00	382.00	43450.	113.74
1169	450.00	371.84	43450.	116.85
1178	450.00	365.59	43450.	118.85
1135	450.00	364.58	43450.	119.18
1177	450.00	348.80	43450.	124.57
1136	450.00	347.54	43450.	125.02
1176	450.00	334.38	43450.	129.94
1137	450.00	310.64	43450.	139.87
1138	450.00	285.17	43450.	152.36
1175	450.00	274.48	43450.	158.30

Table 3.AA.17

TITLE=
MPC-24 Structural Analysis

SUBTITLE 1 =
Component: Enclosure Vessel
SUBTITLE 2 =
Load Combination: E3.c (See Table 3.1.4)
SUBTITLE 3 =
Stress Result: Primary Local Plus Primary Bending (PL+PB)

PRINT ELEMENT TABLE ITEMS PER ELEMENT

STAT ELEM	CURRENT REF TEMP	MIXED PL+PB	PREVIOUS ALLOW	PREVIOUS SF
1225	450.00	20319.	65200.	3.2088
1232	450.00	20315.	65200.	3.2094
1224	450.00	18586.	65200.	3.5080
1233	450.00	18582.	65200.	3.5089
1223	450.00	16796.	65200.	3.8820
1234	450.00	16790.	65200.	3.8832
1138	450.00	16414.	65200.	3.9721
1139	450.00	16246.	65200.	4.0134
1105	450.00	16038.	65200.	4.0654
1104	450.00	16037.	65200.	4.0655
1207	450.00	16034.	65200.	4.0662
1208	450.00	16034.	65200.	4.0663
1103	450.00	15963.	65200.	4.0844
1209	450.00	15959.	65200.	4.0855
1106	450.00	15766.	65200.	4.1354
1206	450.00	15764.	65200.	4.1359
1246	450.00	15577.	65200.	4.1858
1210	450.00	15571.	65200.	4.1873
1211	450.00	15231.	65200.	4.2809
1107	450.00	15114.	65200.	4.3139
1205	450.00	15113.	65200.	4.3141
1226	450.00	15016.	65200.	4.3422
1231	450.00	15012.	65200.	4.3432
1175	450.00	14993.	65200.	4.3487
1222	450.00	14960.	65200.	4.3582
1235	450.00	14954.	65200.	4.3599
1181	450.00	14900.	65200.	4.3758
1227	450.00	14893.	65200.	4.3779
1131	450.00	14892.	65200.	4.3783
1230	450.00	14891.	65200.	4.3786
1228	450.00	14821.	65200.	4.3992
1229	450.00	14819.	65200.	4.3996
1174	450.00	14818.	65200.	4.4002
1245	450.00	14806.	65200.	4.4037
1212	450.00	14801.	65200.	4.4051
1182	450.00	14140.	65200.	4.6110
1130	450.00	14123.	65200.	4.6165
1204	450.00	14046.	65200.	4.6418
1108	450.00	14045.	65200.	4.6421

Table 3.AA.17 (continued)

1244	450.00	13864.	65200.	4.7027
1213	450.00	13859.	65200.	4.7046
1146	450.00	13232.	65200.	4.9273
1167	450.00	13232.	65200.	4.9275
1221	450.00	13095.	65200.	4.9792
1236	450.00	13088.	65200.	4.9816
1166	450.00	12988.	65200.	5.0200
1147	450.00	12980.	65200.	5.0232
1243	450.00	12712.	65200.	5.1289
1214	450.00	12706.	65200.	5.1313
1203	450.00	12527.	65200.	5.2049
1109	450.00	12524.	65200.	5.2059
1202	450.00	11393.	65200.	5.7230
1110	450.00	11389.	65200.	5.7247
1242	450.00	11380.	65200.	5.7292
1215	450.00	11374.	65200.	5.7324
1220	450.00	11215.	65200.	5.8138
1237	450.00	11208.	65200.	5.8174
1158	450.00	10641.	65200.	6.1275
1155	450.00	10636.	65200.	6.1304
1201	450.00	10079.	65200.	6.4688
1111	450.00	10075.	65200.	6.4716
1122	450.00	10034.	65200.	6.4977
1190	450.00	10021.	65200.	6.5063
1241	450.00	9897.8	65200.	6.5873
1216	450.00	9891.0	65200.	6.5919
1173	450.00	9500.0	65200.	6.8632
1219	450.00	9339.2	65200.	6.9813
1238	450.00	9332.1	65200.	6.9867
1123	450.00	8568.2	65200.	7.6096
1189	450.00	8560.0	65200.	7.6168
1180	450.00	8465.9	65200.	7.7015
1132	450.00	8460.8	65200.	7.7061
1240	450.00	8292.5	65200.	7.8625
1217	450.00	8285.5	65200.	7.8691
1140	450.00	8105.6	65200.	8.0438
1137	450.00	7996.3	65200.	8.1538
1157	450.00	7960.9	65200.	8.1901
1156	450.00	7955.8	65200.	8.1953
1121	450.00	7940.8	65200.	8.2108
1191	450.00	7935.4	65200.	8.2164
1183	450.00	7837.0	65200.	8.3195
1129	450.00	7826.8	65200.	8.3304
1154	450.00	7622.7	65200.	8.5533
1159	450.00	7617.6	65200.	8.5591
1218	450.00	7537.6	65200.	8.6500
1239	450.00	7530.2	65200.	8.6584
1200	450.00	7289.2	65200.	8.9447
1112	450.00	7283.4	65200.	8.9519
1176	450.00	7204.8	65200.	9.0495
1145	450.00	6877.3	65200.	9.4805
1168	450.00	6877.0	65200.	9.4809
1194	450.00	6143.8	65200.	10.612

Table 3.AA.17 (continued)

1118	450.00	6143.7	65200.	10.612
1177	450.00	6017.4	65200.	10.835
1113	450.00	5984.0	65200.	10.896
1199	450.00	5983.8	65200.	10.896
1120	450.00	5928.9	65200.	10.997
1192	450.00	5927.8	65200.	10.999
1136	450.00	5769.5	65200.	11.301
1198	450.00	5750.3	65200.	11.339
1114	450.00	5749.8	65200.	11.339
1197	450.00	5524.6	65200.	11.802
1115	450.00	5524.4	65200.	11.802
1124	450.00	5500.0	65200.	11.855
1188	450.00	5499.5	65200.	11.856
1196	450.00	5487.6	65200.	11.881
1116	450.00	5487.5	65200.	11.882
1195	450.00	5432.8	65200.	12.001
1117	450.00	5432.7	65200.	12.001
1193	450.00	5239.5	65200.	12.444
1119	450.00	5239.1	65200.	12.445
1172	450.00	5182.7	65200.	12.580
1141	450.00	5092.4	65200.	12.803
1133	450.00	5058.1	65200.	12.890
1179	450.00	5040.1	65200.	12.936
1148	450.00	4879.6	65200.	13.362
1165	450.00	4876.6	65200.	13.370
1153	450.00	4774.2	65200.	13.657
1160	450.00	4769.2	65200.	13.671
1144	450.00	4704.5	65200.	13.859
1169	450.00	4696.0	65200.	13.884
1135	450.00	4633.1	65200.	14.073
1170	450.00	4465.0	65200.	14.602
1143	450.00	4462.0	65200.	14.612
1184	450.00	4444.7	65200.	14.669
1128	450.00	4438.2	65200.	14.691
1149	450.00	4136.2	65200.	15.763
1164	450.00	4131.6	65200.	15.781
1187	450.00	3705.4	65200.	17.596
1125	450.00	3702.0	65200.	17.612
1178	450.00	3601.7	65200.	18.103
1142	450.00	3543.4	65200.	18.401
1171	450.00	3524.6	65200.	18.498
1134	450.00	3514.4	65200.	18.552
1186	450.00	2820.0	65200.	23.121
1126	450.00	2814.9	65200.	23.162
1185	450.00	2716.9	65200.	23.998
1127	450.00	2712.1	65200.	24.040
1161	450.00	2627.2	65200.	24.817
1152	450.00	2622.2	65200.	24.865
1163	450.00	2081.8	65200.	31.318
1150	450.00	2076.9	65200.	31.393
1162	450.00	1971.9	65200.	33.065
1151	450.00	1966.8	65200.	33.150

Table 3.AA.18

TITLE=
MPC-24 Structural Analysis

SUBTITLE 1 =
Component: Basket Supports
SUBTITLE 2 =
Load Combination: E3.c (See Table 3.1.4)
SUBTITLE 3 =
Stress Result: Primary Membrane (PM)

PRINT ELEMENT TABLE ITEMS PER ELEMENT

STAT ELEM	CURRENT REF TEMP	MIXED PM	PREVIOUS ALLOW	PREVIOUS SF
1102	450.00	-6266.0	43450.	6.9343
1099	450.00	-6266.0	43450.	6.9343
1101	450.00	-6263.5	43450.	6.9370
1098	450.00	-6263.5	43450.	6.9370
1100	450.00	-6241.0	43450.	6.9621
1097	450.00	-6241.0	43450.	6.9621
1096	450.00	-6046.5	43450.	7.1860
1095	450.00	-6044.0	43450.	7.1889
1074	450.00	-6033.9	43450.	7.2010
1073	450.00	-6031.4	43450.	7.2039
1094	450.00	-6024.0	43450.	7.2128
1072	450.00	-6011.4	43450.	7.2279
1093	450.00	-6004.1	43450.	7.2368
1071	450.00	-5991.5	43450.	7.2520
1075-	450.00	-3353.4	43450.	12.957
1089	450.00	-3353.4	43450.	12.957
1076	450.00	-3351.0	43450.	12.966
1090	450.00	-3351.0	43450.	12.966
1077	450.00	-3329.1	43450.	13.051
1091	450.00	-3329.1	43450.	13.051
1078	450.00	-3307.3	43450.	13.138
1092	450.00	-3307.3	43450.	13.138
1079	450.00	-3183.3	43450.	13.650
1084	450.00	-3183.3	43450.	13.650
1080	450.00	-3180.8	43450.	13.660
1085	450.00	-3180.8	43450.	13.660
1086	450.00	-3160.5	43450.	13.748
1081	450.00	-3160.5	43450.	13.748
1082	450.00	-3140.1	43450.	13.837
1087	450.00	-3140.1	43450.	13.837
1083	450.00	-3119.8	43450.	13.927
1088	450.00	-3119.8	43450.	13.927

Table 3.AA.19

TITLE=
MPC-24 Structural Analysis

SUBTITLE 1 =
Component: Basket Supports
SUBTITLE 2 =
Load Combination: E3.c (See Table 3.1.4)
SUBTITLE 3 =
Stress Result: Primary Local Plus Primary Bending (PL+PB)

PRINT ELEMENT TABLE ITEMS PER ELEMENT

STAT ELEM	CURRENT REF TEMP	MIXED PL+PB	PREVIOUS ALLOW	PREVIOUS SF
1088	450.00	12914.	65200.	5.0486
1083	450.00	12914.	65200.	5.0486
1082	450.00	12550.	65200.	5.1952
1087	450.00	12550.	65200.	5.1952
1086	450.00	9144.5	65200.	7.1300
1081	450.00	9144.5	65200.	7.1300
1099	450.00	8868.7	65200.	7.3517
1102	450.00	8868.7	65200.	7.3517
1098	450.00	8587.8	65200.	7.5922
1101	450.00	8587.8	65200.	7.5922
1096	450.00	8236.1	65200.	7.9164
1074	450.00	8224.2	65200.	7.9278
1095	450.00	8034.1	65200.	8.1154
1073	450.00	8022.2	65200.	8.1275
1094	450.00	6727.1	65200.	9.6921
1072	450.00	6714.9	65200.	9.7098
1097	450.00	6424.4	65200.	10.149
1100	450.00	6424.4	65200.	10.149
1093	450.00	6042.5	65200.	10.790
1071	450.00	6030.0	65200.	10.813
1085	450.00	5092.9	65200.	12.802
1080	450.00	5092.9	65200.	12.802
1092	450.00	3672.5	65200.	17.754
1078	450.00	3671.7	65200.	17.757
1091	450.00	3398.6	65200.	19.185
1077	450.00	3397.8	65200.	19.189
1075	450.00	3249.9	65200.	20.062
1089	450.00	3249.9	65200.	20.062
1084	450.00	2572.7	65200.	25.343
1079	450.00	2572.7	65200.	25.343
1076	450.00	1908.6	65200.	34.161
1090	450.00	1908.2	65200.	34.169

PAGES 3.AA-127 THROUGH 3.AA-225
ARE INTENTIONALLY DELETED

Table 3.AA.39

TITLE=
MPC-68 Structural Analysis

SUBTITLE 1 =
Component: Fuel Basket
SUBTITLE 2 =
Load Combination: F1 (See Table 3.1.3)
SUBTITLE 3 =
Stress Result: Secondary Stress (Q)

PRINT ELEMENT TABLE ITEMS PER ELEMENT

STAT ELEM	CURRENT REF TEMP	CURRENT Q
193	324.58	15070.
72	329.45	15070.
1057	324.58	15070.
1459	324.58	15070.
1555	324.58	15070.
168	329.45	15070.
366	329.45	15070.
1230	329.45	15070.
1417	372.13	14811.
187	372.13	14811.
204	368.45	14811.
1458	368.45	14811.
1584	368.45	14811.
1254	368.45	14811.
61	372.13	14811.
367	372.13	14811.
194	329.45	14376.
71	372.93	14376.
1058	329.45	14376.
1556	329.45	14376.
1460	329.45	14376.
167	372.93	14376.
365	372.93	14376.
1229	372.93	14376.
1441	205.73	14273.
384	209.38	14273.
180	209.38	14273.
1566	209.38	14273.
210	209.38	14273.
1261	205.73	14273.
1435	205.73	14273.
55	205.73	14273.
1453	205.73	14248.
372	210.60	14248.
192	210.60	14248.
1579	205.73	14248.
199	205.73	14248.
1249	205.73	14248.
1422	210.60	14248.

Table 3.AA.39 (continued)

66	210.60	14248.
1418	368.45	14073.
203	333.00	14073.
1457	333.00	14073.
188	368.45	14073.
1583	333.00	14073.
1253	333.00	14073.
62	368.45	14073.
368	368.45	14073.
1436	209.38	13637.
179	241.58	13637.
56	209.38	13637.
1442	209.38	13637.
1565	241.58	13637.
209	241.58	13637.
1262	209.38	13637.
383	241.58	13637.
1421	254.07	13510.
200	210.60	13510.
371	254.07	13510.
65	254.07	13510.
1454	210.60	13510.
1580	210.60	13510.
1250	210.60	13510.
191	254.07	13510.
361	490.98	12118.
163	490.98	12118.
198	487.30	12118.
67	490.98	12118.
1560	487.30	12118.
1464	487.30	12118.
1062	487.30	12118.
1225	490.98	12118.
1278	488.52	11781.
1393	490.98	11781.
211	490.98	11781.
169	490.98	11781.
355	490.98	11781.
54	488.52	11781.
1416	488.52	11781.
1272	488.52	11781.
1273	372.13	11615.
49	372.13	11615.
174	375.77	11615.
1398	375.77	11615.
1411	372.13	11615.
1267	372.13	11615.
216	375.77	11615.
360	375.77	11615.
197	451.85	11424.
164	487.30	11424.
362	487.30	11424.
1061	451.85	11424.

Table 3.AA.39 (continued)

1559	451.85	11424.
1463	451.85	11424.
68	487.30	11424.
1226	487.30	11424.
1277	464.35	11186.
1394	488.52	11186.
212	488.52	11186.
53	464.35	11186.
170	488.52	11186.
356	488.52	11186.
1271	464.35	11186.
1415	464.35	11186.
1274	375.77	11020.
173	407.97	11020.
50	375.77	11020.
1397	407.97	11020.
1412	375.77	11020.
1268	375.77	11020.
215	407.97	11020.
359	407.97	11020.
1440	322.13	10869.
1446	322.13	10869.
1561	324.58	10869.
205	324.58	10869.
175	324.58	10869.
60	322.13	10869.
379	324.58	10869.
1266	322.13	10869.
1439	297.95	10233.
1445	297.95	10233.
1562	322.13	10233.
206	322.13	10233.
59	297.95	10233.
380	322.13	10233.
176	322.13	10233.
1265	297.95	10233.
195	372.93	7969.5
1059	372.93	7969.5
1557	372.93	7969.5
1461	372.93	7969.5
166	413.73	7969.5
364	413.73	7969.5
70	413.73	7969.5
1228	413.73	7969.5
1437	241.58	7761.8
57	241.58	7761.8
1443	241.58	7761.8
1564	271.10	7761.8
208	271.10	7761.8
382	271.10	7761.8
1263	241.58	7761.8
178	271.10	7761.8
571	395.90	7325.0

Table 3.AA.39 (continued)

1470	394.66	7325.0
1537	395.90	7325.0
397	395.90	7325.0
151	395.90	7325.0
1074	394.66	7325.0
1248	394.66	7325.0
84	394.66	7325.0
369	333.00	7256.8
189	333.00	7256.8
1456	294.87	7256.8
202	294.87	7256.8
1582	294.87	7256.8
1252	294.87	7256.8
1419	333.00	7256.8
63	333.00	7256.8
1374	493.41	7220.9
1297	490.98	7220.9
1219	490.98	7220.9
552	493.41	7220.9
1075	490.98	7220.9
408	493.41	7220.9
150	493.41	7220.9
73	490.98	7220.9
337	609.83	7174.3
1392	607.38	7174.3
331	609.83	7174.3
1296	607.38	7174.3
1086	607.38	7174.3
1201	609.83	7174.3
222	607.38	7174.3
235	609.83	7174.3
572	394.66	7035.7
1469	381.76	7035.7
1538	394.66	7035.7
398	394.66	7035.7
152	394.66	7035.7
1073	381.76	7035.7
1247	381.76	7035.7
83	381.76	7035.7
1206	494.63	6954.7
1081	490.98	6954.7
1387	490.98	6954.7
1291	490.98	6954.7
240	494.63	6954.7
336	494.63	6954.7
342	494.63	6954.7
217	490.98	6954.7
1373	514.33	6861.8
1298	493.41	6861.8
1220	493.41	6861.8
551	514.33	6861.8
1076	493.41	6861.8
407	514.33	6861.8

Table 3.AA.39 (continued)

149	514.33	6861.8
74	493.41	6861.8
1369	562.29	6836.4
1302	561.06	6836.4
547	562.29	6836.4
1224	561.06	6836.4
1080	561.06	6836.4
145	562.29	6836.4
403	562.29	6836.4
78	561.06	6836.4
1085	583.20	6818.9
1202	607.38	6818.9
1391	583.20	6818.9
1295	583.20	6818.9
338	607.38	6818.9
332	607.38	6818.9
236	607.38	6818.9
221	583.20	6818.9
1420	294.87	6693.5
370	294.87	6693.5
64	294.87	6693.5
201	254.07	6693.5
1455	254.07	6693.5
1581	254.07	6693.5
1251	254.07	6693.5
190	294.87	6693.5
1205	526.83	6599.3
1082	494.63	6599.3
1388	494.63	6599.3
1292	494.63	6599.3
239	526.83	6599.3
335	526.83	6599.3
341	526.83	6599.3
218	494.63	6599.3
1370	561.06	6477.3
1301	548.15	6477.3
1223	548.15	6477.3
548	561.06	6477.3
1079	548.15	6477.3
146	561.06	6477.3
404	561.06	6477.3
77	548.15	6477.3
171	464.35	5696.3
1276	437.50	5696.3
1395	464.35	5696.3
52	437.50	5696.3
213	464.35	5696.3
1414	437.50	5696.3
357	464.35	5696.3
1270	437.50	5696.3
1275	407.97	5530.2
1396	437.50	5530.2
1269	407.97	5530.2

Table 3.AA.39 (continued)

358	437.50	5530.2
1413	407.97	5530.2
214	437.50	5530.2
172	437.50	5530.2
51	407.97	5530.2
588	391.00	5466.3
799	395.90	5466.3
1632	391.00	5466.3
1602	391.00	5466.3
43	395.90	5466.3
822	391.00	5466.3
13	395.90	5466.3
1033	395.90	5466.3
587	344.27	5198.3
821	344.27	5198.3
14	391.00	5198.3
44	391.00	5198.3
1601	344.27	5198.3
800	391.00	5198.3
1034	391.00	5198.3
1631	344.27	5198.3
594	183.17	5099.7
1614	183.17	5099.7
1585	181.96	5099.7
816	183.17	5099.7
36	183.17	5099.7
829	181.96	5099.7
7	181.96	5099.7
1051	181.96	5099.7
583	181.96	5093.3
1627	181.96	5093.3
1597	181.96	5093.3
804	188.05	5093.3
48	188.05	5093.3
817	181.96	5093.3
18	188.05	5093.3
1038	188.05	5093.3
390	558.61	5046.3
1536	558.61	5046.3
1488	558.61	5046.3
553	562.29	5046.3
1009	562.29	5046.3
139	562.29	5046.3
846	558.61	5046.3
91	562.29	5046.3
363	451.85	5017.2
1462	413.73	5017.2
196	413.73	5017.2
1558	413.73	5017.2
165	451.85	5017.2
1227	451.85	5017.2
1060	413.73	5017.2
69	451.85	5017.2

Table 3.AA.39 (continued)

385	395.90	4873.0
1531	395.90	4873.0
1483	395.90	4873.0
1014	400.76	4873.0
841	395.90	4873.0
144	400.76	4873.0
96	400.76	4873.0
558	400.76	4873.0
593	192.81	4857.3
1613	192.81	4857.3
1586	183.17	4857.3
815	192.81	4857.3
35	192.81	4857.3
830	183.17	4857.3
8	183.17	4857.3
1052	183.17	4857.3
584	188.05	4825.3
1628	188.05	4825.3
1598	188.05	4825.3
803	242.80	4825.3
47	242.80	4825.3
818	188.05	4825.3
17	242.80	4825.3
1037	242.80	4825.3
389	523.16	4793.1
1535	523.16	4793.1
1487	523.16	4793.1
554	558.61	4793.1
1010	558.61	4793.1
140	558.61	4793.1
845	523.16	4793.1
92	558.61	4793.1
1542	327.01	4657.0
576	327.01	4657.0
402	327.01	4657.0
1465	324.58	4657.0
156	327.01	4657.0
1243	324.58	4657.0
1069	324.58	4657.0
79	324.58	4657.0
386	400.76	4619.7
1532	400.76	4619.7
1484	400.76	4619.7
1013	444.24	4619.7
842	400.76	4619.7
143	444.24	4619.7
95	444.24	4619.7
557	444.24	4619.7
1182	612.26	4570.1
1195	609.83	4570.1
1099	609.83	4570.1
1105	609.83	4570.1
241	609.83	4570.1

Table 3.AA.39 (continued)

432	612.26	4570.1
528	612.26	4570.1
318	612.26	4570.1
1177	681.15	4558.8
1200	679.91	4558.8
1110	679.91	4558.8
1104	679.91	4558.8
246	679.91	4558.8
523	681.15	4558.8
313	681.15	4558.8
427	681.15	4558.8
589	205.73	4474.6
1609	205.73	4474.6
1590	205.72	4474.6
834	205.72	4474.6
811	205.73	4474.6
31	205.73	4474.6
12	205.72	4474.6
1056	205.72	4474.6
1541	347.93	4367.7
575	347.93	4367.7
401	347.93	4367.7
1466	327.01	4367.7
155	347.93	4367.7
1244	327.01	4367.7
1070	327.01	4367.7
80	327.01	4367.7
573	381.76	4363.8
1468	366.18	4363.8
1539	381.76	4363.8
399	381.76	4363.8
153	381.76	4363.8
1072	366.18	4363.8
1246	366.18	4363.8
82	366.18	4363.8
1444	271.10	4357.4
381	297.95	4357.4
177	297.95	4357.4
1264	271.10	4357.4
1563	297.95	4357.4
207	297.95	4357.4
1438	271.10	4357.4
58	271.10	4357.4
1181	633.18	4344.8
1196	612.26	4344.8
1100	612.26	4344.8
1106	612.26	4344.8
242	612.26	4344.8
431	633.18	4344.8
527	633.18	4344.8
317	633.18	4344.8
1178	679.91	4333.6
1199	667.01	4333.6

Table 3.AA.39 (continued)

1109	667.01	4333.6
1103	667.01	4333.6
245	667.01	4333.6
524	679.91	4333.6
314	679.91	4333.6
428	679.91	4333.6
590	205.72	4232.2
1610	205.72	4232.2
1589	204.09	4232.2
833	204.09	4232.2
812	205.72	4232.2
32	205.72	4232.2
11	204.09	4232.2
1055	204.09	4232.2
865	562.29	3824.9
409	562.29	3824.9
1315	562.29	3824.9
990	565.94	3824.9
1363	562.29	3824.9
264	565.94	3824.9
534	565.94	3824.9
312	565.94	3824.9
1368	678.69	3708.4
985	681.15	3708.4
870	678.69	3708.4
414	678.69	3708.4
1320	678.69	3708.4
259	681.15	3708.4
307	681.15	3708.4
529	681.15	3708.4
600	397.10	3636.5
1518	397.10	3636.5
1489	395.90	3636.5
30	397.10	3636.5
835	395.90	3636.5
792	397.10	3636.5
1	395.90	3636.5
1027	395.90	3636.5
1364	565.94	3633.2
989	598.14	3633.2
866	565.94	3633.2
410	565.94	3633.2
1316	565.94	3633.2
263	598.14	3633.2
311	598.14	3633.2
533	598.14	3633.2
1372	532.58	3546.3
1299	514.33	3546.3
1221	514.33	3546.3
406	532.58	3546.3
1077	514.33	3546.3
550	532.58	3546.3
148	532.58	3546.3

Table 3.AA.39 (continued)

75	514.33	3546.3
1084	556.35	3537.2
1203	583.20	3537.2
1390	556.35	3537.2
1294	556.35	3537.2
339	583.20	3537.2
333	583.20	3537.2
237	583.20	3537.2
220	556.35	3537.2
1367	654.51	3516.7
986	678.69	3516.7
869	654.51	3516.7
413	654.51	3516.7
1319	654.51	3516.7
260	678.69	3516.7
308	678.69	3516.7
530	678.69	3516.7
595	419.67	3473.6
1513	419.67	3473.6
1494	419.65	3473.6
840	419.65	3473.6
25	419.67	3473.6
787	419.67	3473.6
6	419.65	3473.6
1032	419.65	3473.6
599	406.75	3472.1
1517	406.75	3472.1
1490	397.10	3472.1
29	406.75	3472.1
836	397.10	3472.1
791	406.75	3472.1
2	397.10	3472.1
1028	397.10	3472.1
1204	556.35	3317.5
1083	526.83	3317.5
1389	526.83	3317.5
1293	526.83	3317.5
238	556.35	3317.5
334	556.35	3317.5
340	556.35	3317.5
219	526.83	3317.5
596	419.65	3309.2
1514	419.65	3309.2
1493	418.03	3309.2
839	418.03	3309.2
26	419.65	3309.2
788	419.65	3309.2
5	418.03	3309.2
1031	418.03	3309.2
549	548.15	3161.8
405	548.15	3161.8
1222	532.58	3161.8
76	532.58	3161.8

Table 3.AA.39 (continued)

1078	532.58	3161.8
1371	548.15	3161.8
1300	532.58	3161.8
586	294.87	2722.7
1600	294.87	2722.7
15	344.27	2722.7
1630	294.87	2722.7
801	344.27	2722.7
9	192.81	2618.4
1053	192.81	2618.4
34	199.79	2618.4
831	192.81	2618.4
1612	199.79	2618.4
814	199.79	2618.4
141	523.16	2454.6
1534	485.04	2454.6
1011	523.16	2454.6
1486	485.04	2454.6
844	485.04	2454.6
585	242.80	2349.7
1599	242.80	2349.7
802	294.87	2349.7
819	242.80	2349.7
16	294.87	2349.7
1533	444.24	2281.2
387	444.24	2281.2
1485	444.24	2281.2
843	444.24	2281.2
142	485.04	2281.2
556	485.04	2281.2
1197	633.18	2264.3
1101	633.18	2264.3
243	633.18	2264.3
430	651.43	2264.3
526	651.43	2264.3
1179	667.01	2253.0

Table 3.AA.39 (continued)

1198	651.43	2253.0
1108	651.43	2253.0
1102	651.43	2253.0
525	667.01	2253.0
244	651.43	2253.0
315	667.01	2253.0
429	667.01	2253.0
1171	681.15	2220.7
966	683.57	2220.7
433	681.15	2220.7
889	681.15	2220.7
456	683.57	2220.7
1123	681.15	2220.7
504	683.57	2220.7
510	683.57	2220.7
1176	751.22	2215.8
961	752.46	2215.8
438	751.22	2215.8
894	751.22	2215.8
1128	751.22	2215.8
451	752.46	2215.8
499	752.46	2215.8
505	752.46	2215.8
619	586.06	2111.1
1345	586.06	2111.1
864	586.05	2111.1
1326	586.05	2111.1
1008	586.05	2111.1
102	586.05	2111.1
121	586.06	2111.1
763	586.06	2111.1
1172	683.57	2110.5
965	704.50	2110.5
434	683.57	2110.5
890	683.57	2110.5
455	704.50	2110.5
1124	683.57	2110.5
503	704.50	2110.5
509	704.50	2110.5
1175	738.32	2105.6
962	751.22	2105.6
437	738.32	2105.6
893	738.32	2105.6
1127	738.32	2105.6
452	751.22	2105.6
500	751.22	2105.6
506	751.22	2105.6
624	563.50	2033.1
1350	563.50	2033.1
1003	562.29	2033.1
1321	562.29	2033.1
859	562.29	2033.1
97	562.29	2033.1

126	563.50	2033.1
620	586.05	2005.9
1346	586.05	2005.9
1325	584.42	2005.9
1007	584.42	2005.9
122	586.05	2005.9
764	586.05	2005.9
1611	204.09	1993.3
1588	199.79	1993.3
813	204.09	1993.3
33	204.09	1993.3
1054	199.79	1993.3
598	413.73	1953.9
1491	406.75	1953.9
28	413.73	1953.9
3	406.75	1953.9
790	413.73	1953.9
623	573.15	1927.9
1349	573.15	1927.9
860	563.50	1927.9
1322	563.50	1927.9
125	573.15	1927.9
767	573.15	1927.9
988	627.66	1862.7
867	598.14	1862.7
1317	598.14	1862.7
262	627.66	1862.7
532	627.66	1862.7
597	418.03	1791.0
1492	413.73	1791.0
838	413.73	1791.0
789	418.03	1791.0
4	413.73	1791.0
1366	627.66	1746.2
868	627.66	1746.2

Table 3.AA.39 (continued)

412	627.66	1746.2
1318	627.66	1746.2
261	654.51	1746.2
309	654.51	1746.2
531	654.51	1746.2
1540	366.18	1695.8
400	366.18	1695.8
1467	347.93	1695.8
574	366.18	1695.8
1245	347.93	1695.8
81	347.93	1695.8
154	366.18	1695.8
1071	347.93	1695.8
648	682.35	1640.8
1158	682.35	1640.8
979	681.15	1640.8
883	681.15	1640.8
1129	681.15	1640.8
265	681.15	1640.8
294	682.35	1640.8
744	682.35	1640.8
643	704.92	1630.1
1153	704.92	1630.1
888	704.90	1630.1
984	704.90	1630.1
1134	704.90	1630.1
270	704.90	1630.1
289	704.92	1630.1
739	704.92	1630.1
647	692.00	1567.0
1157	692.00	1567.0
980	682.35	1567.0
884	682.35	1567.0
1130	682.35	1567.0
266	682.35	1567.0
293	692.00	1567.0
743	692.00	1567.0
644	704.90	1556.3
1154	704.90	1556.3
887	703.27	1556.3
983	703.27	1556.3
1133	703.27	1556.3
269	703.27	1556.3
290	704.90	1556.3
740	704.90	1556.3
964	722.75	1092.4
1173	704.50	1092.4
435	704.50	1092.4
891	704.50	1092.4
454	722.75	1092.4
1125	704.50	1092.4
502	722.75	1092.4
508	722.75	1092.4

Table 3.AA.39 (continued)

963	738.32	1087.5
436	722.75	1087.5
1126	722.75	1087.5
453	738.32	1087.5
507	738.32	1087.5
621	584.42	1034.0
862	580.12	1034.0
1324	580.12	1034.0
100	580.12	1034.0
123	584.42	1034.0
622	580.12	956.03
1348	580.12	956.03
861	573.15	956.03
1323	573.15	956.03
124	580.12	956.03
766	580.12	956.03
1156	698.97	885.42
981	692.00	885.42
267	692.00	885.42
1131	692.00	885.42
742	698.97	885.42
1155	703.27	874.70
886	698.97	874.70
1132	698.97	874.70
268	698.97	874.70
291	703.27	874.70
672	753.66	806.69
942	753.66	806.69
457	752.46	806.69
907	752.46	806.69
486	753.66	806.69
720	753.66	806.69
937	776.23	805.15
960	776.21	805.15
912	776.21	805.15

Table 3.AA.39 (continued)

918	776.21	805.15
481	776.23	805.15
715	776.23	805.15
671	763.31	769.93
941	763.31	769.93
956	753.66	769.93
458	753.66	769.93
908	753.66	769.93
914	753.66	769.93
485	763.31	769.93
719	763.31	769.93
668	776.21	768.39
938	776.21	768.39
959	774.59	768.39
461	774.59	768.39
911	774.59	768.39
917	774.59	768.39
482	776.21	768.39
716	776.21	768.39
670	770.29	430.51
940	770.29	430.51
957	763.31	430.51
459	763.31	430.51
915	763.31	430.51
909	763.31	430.51
484	770.29	430.51
718	770.29	430.51
939	774.59	428.96
669-	774.59	428.96
460	770.29	428.96
958	770.29	428.96
910	770.29	428.96
916	770.29	428.96
483	774.59	428.96
717	774.59	428.96
691	800.00	311.31
692	799.98	311.31
696	777.43	311.31
695	787.08	311.31
702	777.43	311.31
697	800.00	311.31
701	787.08	311.31
698	799.98	311.31
693	798.36	311.31
694	794.06	311.31
700	794.06	311.31
673	776.23	311.31
699	798.36	311.31
674	777.43	311.31
931	776.23	311.31
932	777.43	311.31
936	799.98	311.31
935	798.36	311.31

Table 3.AA.39 (continued)

675	787.08	311.31
933	787.08	311.31
678	799.98	311.31
677	798.36	311.31
934	794.06	311.31
676	794.06	311.31
726	707.34	292.94
725	728.27	292.94
721	776.23	292.94
722	774.99	292.94
649	704.92	292.94
1147	704.92	292.94
650	707.34	292.94
1148	707.34	292.94
1152	774.99	292.94
724	746.52	292.94
654	774.99	292.94
1151	762.09	292.94
653	762.09	292.94
723	762.09	292.94
651	728.27	292.94
1149	728.27	292.94
480	707.34	292.94
1150	746.52	292.94
479	728.27	292.94
652	746.52	292.94
478	746.52	292.94
475	776.23	292.94
476	774.99	292.94
477	762.09	292.94
750	589.71	256.03
749	621.91	256.03
745	704.92	256.03
746	702.46	256.03
748	651.43	256.03
1340	589.71	256.03
1339	586.06	256.03
1344	702.46	256.03
1343	678.28	256.03
747	678.28	256.03
288	589.71	256.03
1341	621.91	256.03
287	621.91	256.03
1342	651.43	256.03
629	678.28	256.03
284	702.46	256.03
283	704.92	256.03
630	702.46	256.03
625	586.06	256.03
628	651.43	256.03
626	589.71	256.03
286	651.43	256.03
627	621.91	256.03

Table 3.AA.39 (continued)

285	678.28	256.03
606	582.38	203.42
605	546.93	203.42
601	419.67	203.42
602	424.54	203.42
773	468.01	203.42
774	424.54	203.42
604	508.81	203.42
772	508.81	203.42
603	468.01	203.42
769	586.06	203.42
1508	424.54	203.42
1507	419.67	203.42
770	582.38	203.42
1512	582.38	203.42
1511	546.93	203.42
1509	468.01	203.42
1510	508.81	203.42
771	546.93	203.42
119	468.01	203.42
120	424.54	203.42
118	508.81	203.42
117	546.93	203.42
115	586.06	203.42
116	582.38	203.42
577	205.73	121.22
578	211.82	121.22
582	414.77	121.22
581	368.04	121.22
793	419.67	121.22
798	211.82	121.22
797	266.57	121.22
794	414.77	121.22
579	266.57	121.22
580	318.64	121.22
24	211.82	121.22
19	419.67	121.22
23	266.57	121.22
796	318.64	121.22
795	368.04	121.22
20	414.77	121.22
22	318.64	121.22
21	368.04	121.22
1603	205.73	121.22
1604	211.82	121.22
1608	414.77	121.22
1607	368.04	121.22
1605	266.57	121.22
1606	318.64	121.22

Table 3.AA.40

TITLE=
MPC-68 Structural Analysis

Component: Fuel Basket
SUBTITLE 2 =

SUBTITLE 3 =
Stress Result: Primary Membrane (PM)

STAT ELEM	CURRENT REF TEMP	CURRENT PM	PREVIOUS ALLOW	PREVIOUS SF
1603	725.00	-384.34	15400.	40.069
797	725.00	-384.25	15400.	40.078
796	725.00	-383.40	15400.	40.167
1605	725.00	-383.40	15400.	40.167
1606	725.00	-382.55	15400.	40.256
794	725.00	-381.70	15400.	40.346
793	725.00	-380.85	15400.	40.435
1608	725.00	-380.85	15400.	40.436
1038	725.00	-365.39	15400.	42.147
1628	725.00	-365.34	15400.	42.152
1629	725.00	-364.49	15400.	42.251
1036	725.00	-364.45	15400.	42.256
1035	725.00	-363.60	15400.	42.354
1631	725.00	-362.79	15400.	42.448
1632	725.00	-361.95	15400.	42.548
1033	725.00	-361.90	15400.	42.553
1507	725.00	-343.38	15400.	44.848
773	725.00	-343.29	15400.	44.860
772	725.00	-342.44	15400.	44.971
1509	725.00	-342.44	15400.	44.972
1510	725.00	-341.59	15400.	45.083
770	725.00	-340.74	15400.	45.196
769	725.00	-339.89	15400.	45.308
1512	725.00	-339.89	15400.	45.309
1014	725.00	-324.01	15400.	47.530
1532	725.00	-323.95	15400.	47.539

Table 3.AA.40 (continued)

1013	725.00	-323.92	15400.	47.543
1533	725.00	-323.10	15400.	47.664
1012	725.00	-323.07	15400.	47.668
1534	725.00	-322.25	15400.	47.789
1011	725.00	-322.22	15400.	47.794
1535	725.00	-321.40	15400.	47.916
1010	725.00	-321.37	15400.	47.920
1536	725.00	-320.55	15400.	48.042
1009	725.00	-320.52	15400.	48.047
1597	725.00	-319.09	15400.	48.263
804	725.00	-319.08	15400.	48.264
1598	725.00	-319.00	15400.	48.277
803	725.00	-318.99	15400.	48.278
1599	725.00	-318.15	15400.	48.405
802	725.00	-318.14	15400.	48.407
1600	725.00	-317.30	15400.	48.535
801	725.00	-317.29	15400.	48.536
1601	725.00	-316.45	15400.	48.665
800	725.00	-316.44	15400.	48.666
1602	725.00	-315.60	15400.	48.796
799	725.00	-315.59	15400.	48.797
750	725.00	-303.18	15400.	50.794
1339	725.00	-303.18	15400.	50.794
749	725.00	-303.09	15400.	50.810
1340	725.00	-303.09	15400.	50.810
748	725.00	-302.24	15400.	50.952
1341	725.00	-302.24	15400.	50.952
747	725.00	-301.40	15400.	51.096
1342	725.00	-301.39	15400.	51.096
746	725.00	-300.55	15400.	51.240
1343	725.00	-300.55	15400.	51.240
745	725.00	-299.70	15400.	51.385
1344	725.00	-299.70	15400.	51.385
1230	725.00	-298.62	15400.	51.571
1229	725.00	-298.53	15400.	51.587
1555	725.00	-298.31	15400.	51.625
1556	725.00	-298.22	15400.	51.640
1228	725.00	-297.68	15400.	51.734
1557	725.00	-297.37	15400.	51.788
1227	725.00	-296.83	15400.	51.882
1558	725.00	-296.52	15400.	51.936
1226	725.00	-295.98	15400.	52.031
1559	725.00	-295.67	15400.	52.085
1225	725.00	-295.13	15400.	52.180
1560	725.00	-294.82	15400.	52.235
1483	725.00	-284.25	15400.	54.178
558	725.00	-284.23	15400.	54.181
1484	725.00	-284.16	15400.	54.195
557	725.00	-284.14	15400.	54.198
1485	725.00	-283.31	15400.	54.357
556	725.00	-283.29	15400.	54.361
1363	725.00	-282.79	15400.	54.458
990	725.00	-282.76	15400.	54.462

1364	725.00	-282.70	15400.	54.475
1486	725.00	-282.46	15400.	54.521
555	725.00	-282.45	15400.	54.524
988	725.00	-281.82	15400.	54.644
1487	725.00	-281.61	15400.	54.685
1366	725.00	-281.00	15400.	54.804
987	725.00	-280.97	15400.	54.809
553	725.00	-280.75	15400.	54.854
1367	725.00	-280.15	15400.	54.970
1368	725.00	-279.30	15400.	55.137
985	725.00	-279.28	15400.	55.142
1579	725.00	-272.78	15400.	56.456
1421	725.00	-272.75	15400.	56.462
1435	725.00	-272.16	15400.	56.585
1566	725.00	-272.10	15400.	56.597
1565	725.00	-272.01	15400.	56.616
1420	725.00	-271.90	15400.	56.638
1437	725.00	-271.22	15400.	56.781
1564	725.00	-271.16	15400.	56.793
1582	725.00	-270.99	15400.	56.828
1438	725.00	-270.37	15400.	56.959
1418	725.00	-270.20	15400.	56.994
1583	725.00	-270.14	15400.	57.007
1562	725.00	-269.46	15400.	57.151
1417	725.00	-269.36	15400.	57.174
1440	725.00	-268.67	15400.	57.319
1561	725.00	-268.61	15400.	57.332
1147	725.00	-262.85	15400.	58.589
725	725.00	-262.76	15400.	58.609
724	725.00	-261.91	15400.	58.799
1149	725.00	-261.91	15400.	58.799
1150	725.00	-261.06	15400.	58.990
722	725.00	-260.21	15400.	59.183
721	725.00	-259.36	15400.	59.376
1152	725.00	-259.36	15400.	59.376

Table 3.AA.40 (continued)

1205	725.00	-258.07	15400.	59.674
1387	725.00	-257.90	15400.	59.714
1388	725.00	-257.81	15400.	59.735
1204	725.00	-257.22	15400.	59.871
1389	725.00	-256.96	15400.	59.932
1203	725.00	-256.37	15400.	60.069
1390	725.00	-256.11	15400.	60.131
1202	725.00	-255.52	15400.	60.269
1391	725.00	-255.26	15400.	60.331
1201	725.00	-254.67	15400.	60.470
1392	725.00	-254.41	15400.	60.532
1315	725.00	-244.58	15400.	62.966
534	725.00	-244.56	15400.	62.969
1316	725.00	-244.48	15400.	62.990
533	725.00	-244.47	15400.	62.993
1317	725.00	-243.64	15400.	63.209
532	725.00	-243.62	15400.	63.212
1318	725.00	-242.79	15400.	63.430
531	725.00	-242.77	15400.	63.433
1319	725.00	-241.94	15400.	63.653
530	725.00	-241.93	15400.	63.656
1171	725.00	-241.50	15400.	63.769
966	725.00	-241.48	15400.	63.774
1172	725.00	-241.41	15400.	63.793
965	725.00	-241.39	15400.	63.798
1320	725.00	-241.09	15400.	63.877
529	725.00	-241.08	15400.	63.880
1173	725.00	-240.56	15400.	64.018
964	725.00	-240.54	15400.	64.023
1174	725.00	-239.71	15400.	64.245
963	725.00	-239.69	15400.	64.250
1175	725.00	-238.86	15400.	64.473
962	725.00	-238.84	15400.	64.478
1176	725.00	-238.01	15400.	64.703
961	725.00	-237.99	15400.	64.708
1411	725.00	-231.24	15400.	66.597
1398	725.00	-231.18	15400.	66.616
1412	725.00	-231.15	15400.	66.623
1397	725.00	-230.90	15400.	66.695
1413	725.00	-230.30	15400.	66.869
1243	725.00	-230.22	15400.	66.892
1542	725.00	-230.14	15400.	66.917
1244	725.00	-230.13	15400.	66.919
1396	725.00	-230.05	15400.	66.941
1541	725.00	-230.05	15400.	66.943
1414	725.00	-229.45	15400.	67.116
1245	725.00	-229.28	15400.	67.167
1395	725.00	-229.20	15400.	67.189
1540	725.00	-229.20	15400.	67.191
1415	725.00	-228.61	15400.	67.365
1246	725.00	-228.43	15400.	67.416
1394	725.00	-228.35	15400.	67.439
1539	725.00	-228.35	15400.	67.441

Table 3.AA.40 (continued)

1247	725.00	-227.58	15400.	67.668
1393	725.00	-227.51	15400.	67.691
1248	725.00	-226.73	15400.	67.921
1537	725.00	-226.65	15400.	67.946
931	725.00	-222.60	15400.	69.182
701	725.00	-222.51	15400.	69.211
700	725.00	-221.66	15400.	69.476
933	725.00	-221.66	15400.	69.476
934	725.00	-220.81	15400.	69.743
698	725.00	-219.96	15400.	70.012
697	725.00	-219.11	15400.	70.283
936	725.00	-219.11	15400.	70.283
1181	725.00	-217.69	15400.	70.744
1195	725.00	-217.56	15400.	70.786
1180	725.00	-216.84	15400.	71.021
1197	725.00	-216.62	15400.	71.093
1198	725.00	-215.77	15400.	71.373
1178	725.00	-215.14	15400.	71.581
1177	725.00	-214.29	15400.	71.865
1200	725.00	-214.07	15400.	71.939
510	725.00	-205.68	15400.	74.872
1124	725.00	-205.60	15400.	74.902
1125	725.00	-204.75	15400.	75.212
508	725.00	-204.74	15400.	75.216
507	725.00	-203.89	15400.	75.529
1127	725.00	-203.06	15400.	75.841
1128	725.00	-202.21	15400.	76.159
505	725.00	-202.20	15400.	76.163
942	725.00	-200.19	15400.	76.926
956	725.00	-200.12	15400.	76.955
957	725.00	-199.27	15400.	77.283
940	725.00	-199.25	15400.	77.289
939	725.00	-198.40	15400.	77.620
959	725.00	-197.57	15400.	77.947
960	725.00	-196.72	15400.	78.283

Table 3.AA.40 (continued)

937	725.00	-196.71	15400.	78.290
1219	725.00	-191.43	15400.	80.448
1220	725.00	-191.33	15400.	80.487
1374	725.00	-191.22	15400.	80.534
1373	725.00	-191.13	15400.	80.573
1221	725.00	-190.49	15400.	80.846
1372	725.00	-190.28	15400.	80.932
1222	725.00	-189.64	15400.	81.208
1371	725.00	-189.43	15400.	81.295
1223	725.00	-188.79	15400.	81.573
1370	725.00	-188.58	15400.	81.661
1224	725.00	-187.94	15400.	81.941
1369	725.00	-187.74	15400.	82.030
691	725.00	-182.43	15400.	84.418
678	725.00	-182.43	15400.	84.418
692	725.00	-182.33	15400.	84.460
677	725.00	-182.33	15400.	84.460
693	725.00	-181.49	15400.	84.855
676	725.00	-181.49	15400.	84.855
694	725.00	-180.64	15400.	85.254
675	725.00	-180.64	15400.	85.254
695	725.00	-179.79	15400.	85.656
674	725.00	-179.79	15400.	85.656
696	725.00	-178.94	15400.	86.063
673	725.00	-178.94	15400.	86.063
1027	725.00	-178.03	15400.	86.503
1518	725.00	-177.98	15400.	86.529
1028	725.00	-177.94	15400.	86.548
1517	725.00	-177.88	15400.	86.573
1158	725.00	-177.33	15400.	86.843
1157	725.00	-177.24	15400.	86.888
979	725.00	-177.15	15400.	86.932
1029	725.00	-177.09	15400.	86.962
980	725.00	-177.06	15400.	86.977
1516	725.00	-177.04	15400.	86.988
1156	725.00	-176.39	15400.	87.306
1030	725.00	-176.24	15400.	87.381
981	725.00	-176.21	15400.	87.396
1515	725.00	-176.19	15400.	87.407
1155	725.00	-175.54	15400.	87.728
1031	725.00	-175.39	15400.	87.804
982	725.00	-175.36	15400.	87.819
1514	725.00	-175.34	15400.	87.831
1154	725.00	-174.69	15400.	88.154
1032	725.00	-174.54	15400.	88.231
983	725.00	-174.51	15400.	88.246
1513	725.00	-174.49	15400.	88.258
1153	725.00	-173.85	15400.	88.584
984	725.00	-173.66	15400.	88.677
907	725.00	-166.90	15400.	92.272
486	725.00	-166.89	15400.	92.277
908	725.00	-166.81	15400.	92.323
485	725.00	-166.80	15400.	92.328

Table 3.AA.40 (continued)

909	725.00	-165.96	15400.	92.795
484	725.00	-165.95	15400.	92.800
910	725.00	-165.11	15400.	93.272
483	725.00	-165.10	15400.	93.277
911	725.00	-164.26	15400.	93.754
482	725.00	-164.25	15400.	93.759
912	725.00	-163.41	15400.	94.241
481	725.00	-163.40	15400.	94.246
715	725.00	-158.92	15400.	96.902
918	725.00	-158.91	15400.	96.910
716	725.00	-158.83	15400.	96.958
917	725.00	-158.82	15400.	96.966
717	725.00	-157.98	15400.	97.479
916	725.00	-157.97	15400.	97.487
718	725.00	-157.13	15400.	98.006
915	725.00	-157.12	15400.	98.014
719	725.00	-156.28	15400.	98.538
914	725.00	-156.27	15400.	98.546
720	725.00	-155.44	15400.	99.076
913	725.00	-155.42	15400.	99.084
1003	725.00	-152.05	15400.	101.28
1004	725.00	-151.96	15400.	101.34
1350	725.00	-151.88	15400.	101.40
1349	725.00	-151.79	15400.	101.46
1005	725.00	-151.11	15400.	101.91
1348	725.00	-150.94	15400.	102.03
1006	725.00	-150.26	15400.	102.49
1347	725.00	-150.09	15400.	102.61
1007	725.00	-149.41	15400.	103.07
1346	725.00	-149.24	15400.	103.19
1008	725.00	-148.56	15400.	103.66
1345	725.00	-148.39	15400.	103.78
475	725.00	-142.41	15400.	108.14
654	725.00	-142.41	15400.	108.14
476	725.00	-142.32	15400.	108.21
653	725.00	-142.32	15400.	108.21
477	725.00	-141.47	15400.	108.86
652	725.00	-141.47	15400.	108.86
478	725.00	-140.62	15400.	109.52
651	725.00	-140.62	15400.	109.52
479	725.00	-139.77	15400.	110.18
650	725.00	-139.77	15400.	110.18
480	725.00	-138.92	15400.	110.85
649	725.00	-138.92	15400.	110.85
1134	725.00	-137.01	15400.	112.40
1133	725.00	-136.92	15400.	112.47
739	725.00	-136.87	15400.	112.52
740	725.00	-136.78	15400.	112.59
1132	725.00	-136.07	15400.	113.18
741	725.00	-135.93	15400.	113.30
600	725.00	135.28	15400.	113.83
1	725.00	135.27	15400.	113.84
1131	725.00	-135.22	15400.	113.89