EMERGENCY PLAN CLASSIFICATION

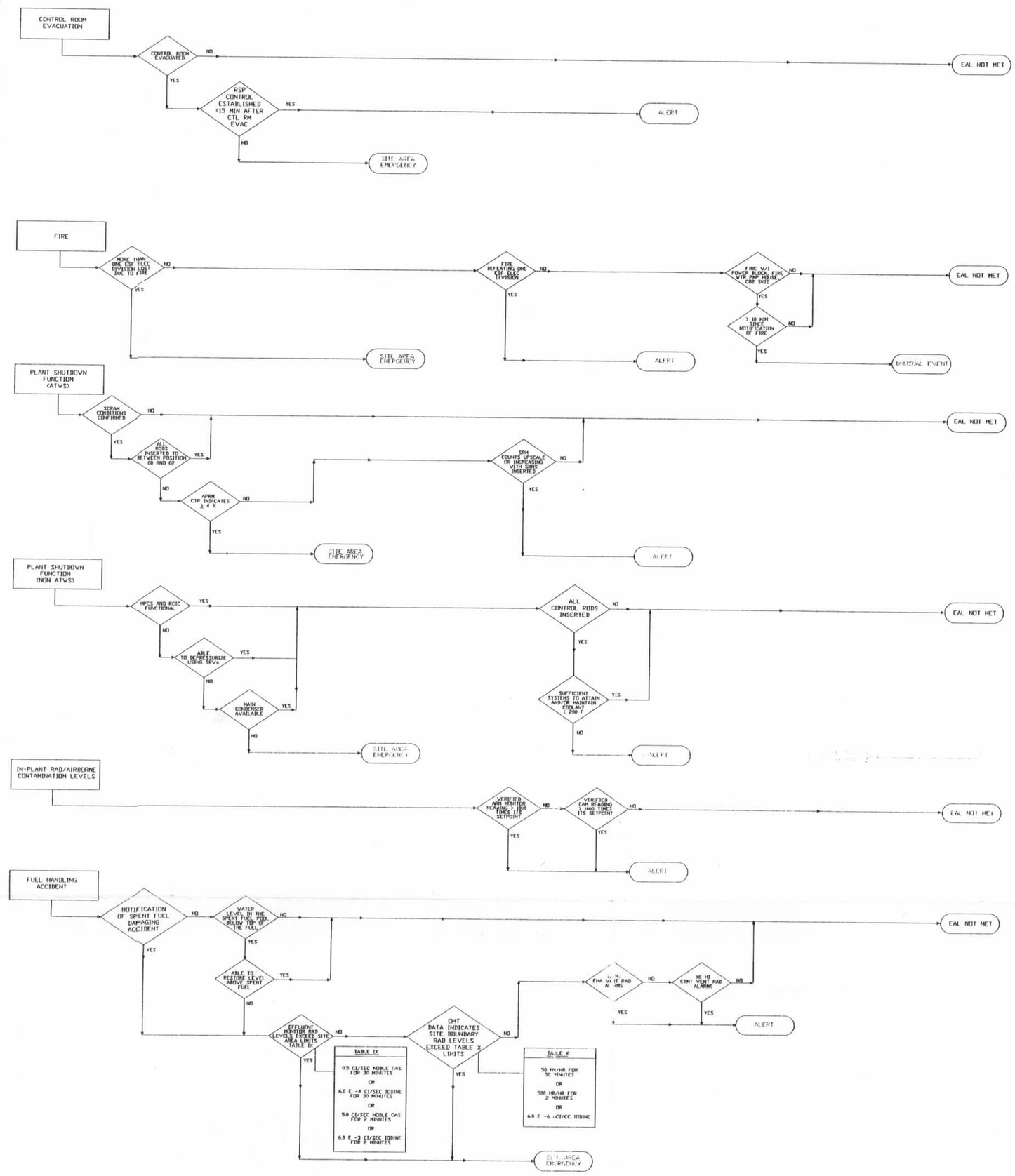

EAL CLASSIFICATION SUBJECT TO CHANGE - MONITOR EALS FOR CHANGING CONDITIONS

EMERGENCY CLASSIFICATION FLOWCHART	
10-S-01-1	EPP 01-02 (FLOWCHART)
DATE: 5/17/00	
PAGE: 2 OF 2	

D2