DISCUSSION OF CHANGES
ITS: CHAPTER 4.0 - DESIGN FEATURES

ADMINISTRATIVE

A.1 In the conversion of the Nine Mile Point Unit 2 current Technical Specifications (CTS) to the proposed plant specific Improved Technical Specifications (ITS), certain wording preferences or conventions are adopted that do not result in technical changes (either actual or interpretation). Editorial changes, reformatting, and revised numbering are adopted to make the ITS consistent with the BWR Standard Technical Specifications, NUREG-1434, Rev. 1 (i.e., the Improved Standard Technical Specifications (ISTS)).

A.2 The description of the exclusion area in CTS 5.1 has been deleted since CTS Figure 5.1.1-1 (ITS Figure 4.1.1) has the identical information. CTS Figure 5.1.2-1, Low Population Zone, has been deleted since a description of the area has been provided. This figure and description continue to provide the information pertinent to 10 CFR 100 requirements. In addition, the Exclusion Area and Site Area Boundary enclose the same areas, therefore, CTS Figures 5.1.1-1 and 5.1.3-1 have been combined in proposed ITS Figure 4.1-1. Since the requirements have not changed and either a Figure or description of each area is provided, this change is considered administrative.

A.3 The site description in CTS 5.1 and some Notes to CTS Figure 5.1.3-1 provide information about James A. Fitzpatrick Nuclear Power Plant (JAFNPP) and NMP1. Note (a) provides the NMP1 Stack location and height, Note (c) provides the JAFNPP Main Stack location and height, Note (d) provides the NMP1 radioactive liquid discharge location, Note (f) provides the JAFNPP radioactive liquid discharge location, and the Additional Information for JAFNPP states the height above ground of the reactor, turbine, and radwaste building vents. This information has been deleted since it is not appropriate to be maintained in the NMP2 Technical Specifications. The NMP2 Technical Specifications only covers operation of the NMP2 site, not NMP1 or a site operated by another entity. Therefore, it is not appropriate to have a design feature of another nuclear power plant in the NMP2 Technical Specifications. Since the NMP2 Operating License controls the operation of NMP2 only, and Section 2.C.(2) of the Operating License states that Niagara Mohawk Power Corporation shall operate the facility (NMP2) in accordance with the Technical Specifications, this deletion is considered administrative.

A.4 Additional information has been added in CTS 5.3.1 to better describe the fuel assemblies and control rods. This wording is consistent with the BWR Standard Technical Specifications, NUREG-1434, Revision 1. Since modification to the design must be approved by the NRC, adding detail to the Specification does not result in a technical change.

ADMINISTRATIVE (continued)

A.5 CTS 5.6.1.2 states that the k_{eff} for new fuel stored in the new fuel storage racks shall not exceed 0.95 in the normal dry condition. This requirement has been deleted in the ITS since it is redundant to the requirement to maintain $k_{eff} \leq 0.95$ in the fully flooded condition. With the new fuel storage pool racks designed to meet the k_{eff} limit when fully flooded, it will also meet the same k_{eff} limit when completely dry (since a completely dry condition provides less moderation). Therefore, since the requirement is redundant to the fully flooded requirement that is being retained in ITS 4.3.1.2.a, this deletion is considered administrative.

A. 6 The requirement in CTS 5.7 to maintain limits on component cyclic and transient stresses is being moved to Specification 5.5.5 in accordance with the format of the BWR Standard Technical Specifications, NUREG-1434, Revision 1. Any technical changes to this requirement will be addressed in the Discussion of Changes for ITS: 5.5.

RELOCATED SPECIFICATIONS

None

TECHNICAL CHANGES - MORE RESTRICTIVE

M.1 A new requirement has been added to specify the nominal distance between fuel bundles seated in the new fuel storage racks (ITS 4.3.1.2.c). The existing Technical Specifications do not contain these limitations on fuel storage in the new fuel storage racks. The addition of this Specification imposes restrictions which will require a formal license amendment request/approval to modify the design, and will ensure the center to center distances are within the assumptions of the safety analysis. Therefore, this change is an additional restriction on plant operation.

TECHNICAL CHANGES - LESS RESTRICTIVE

"Generic"

LA.1 The description of the site location in CTS 5.1 is proposed to be relocated to USAR Sections 2.1.1 and 2.1.1.1, where it currently exists. It will be difficult to alter the site location, therefore, it is not necessary in the Technical Specifications. Any changes to this design feature or the USAR must also

TECHNICAL CHANGES - LESS RESTRICTIVE

LA.1 (cont'd) conform to the requirements of 10 CFR 50.59. If this design feature of the facility were altered in accordance with 10 CFR 50.59, there would not be a significant impact on safety (which is the criteria of 10 CFR 50.36(c)(4) for including as a Design Feature). Therefore, removing these details from the Technical Specifications, while maintaining the details in the USAR, will not impact safe operation of the facility, and is not required to be in the ITS to provide adequate protection of the public health and safety.

LA.2 The specific details of the boundary for the UNRESTRICTED AREA specified in CTS 5.1.3 for radioactive gaseous and liquid effluents are proposed to be relocated to the USAR, Section 2.1.1.3, where it currently exists. The specific boundary in CTS Figure 5.1.3-1 will remain in the ITS (ITS Figure 4.1-1). The requirements for and restrictions on locating the UNRESTRICTED AREA must conform to regulations in 10 CFR 20. Compliance with 10 CFR 20 is required by the NMP2 Operating License. Any changes to this design feature or the USAR must also conform to the requirements of 10 CFR 50.59. If this design feature of the facility were altered in accordance with 10 CFR 50.59, there would not be a significant impact on safety (which is the criteria of 10 CFR 50.36(c)(4) for including as a Design Feature). Therefore, removing these details from the Technical Specifications, while maintaining the details in the USAR, will not impact safe operation of the facility, and is not required to be in the ITS to provide adequate protection of the public health and safety.

LA.3 Primary containment configuration and design details in CTS 5.2.1, primary containment design temperatures and pressures in CTS 5.2.2, secondary containment design details in CTS 5.2.3, and the Reactor Coolant System design pressure and temperature and volume in CTS 5.4, 5.4.1, and 5.4.2 are proposed to be relocated to USAR Sections 5.1, 5.2, 6.2.1, and 6.2.3, where they currently exist. Any changes to these design parameters described in the USAR must conform to the requirements of 10 CFR 50.59. Furthermore, sufficient detail relating to these features exists in CTS and ITS LCOs to ensure any changes which may effect safety would require prior NRC review and approval. Since the features with a potential to effect safety are sufficiently addressed by LCOs, and other features, if altered in accordance with 10 CFR 50.59, would not result in a significant effect on safety, the criteria of 10 CFR 50.36(c)(4) for including as a Design Feature are not met. Therefore, removing these details from the Technical Specifications, while maintaining the detail in the USAR, will not impact safe operation of the facility, and is not required to be in the ITS to provide adequate protection of the public health and safety.

TECHNICAL CHANGES - LESS RESTRICTIVE (continued)

LA.4 The nominal active control rod assembly absorber length described in CTS 5.3.2 is proposed to be relocated to the USAR, Section 4.2, where it is currently described (by reference). Any changes to this design parameter referenced in the USAR must conform to the requirements of 10 CFR 50.59.

Furthermore, sufficient detail relating to this feature exists in CTS and ITS LCO (e.g., SHUTDOWN MARGIN) to ensure changes that may impact safety would require prior NRC review and approval. Since this feature with a potential to impact safety is sufficiently addressed by an LCO, the criteria of 10 CFR 50.36(c)(4) for including as a Design Feature are not met. Therefore, allowing the removal of this detail from Technical Specifications, while maintaining the information in the USAR, will not impact safe operation of the facility, and is not required to be in the ITS to provide adequate protection of the public health and safety.

LA.5 The Meteorological Tower location requirements in CTS 5.5 are proposed to be relocated to the USAR, Section 2.3.3, where they currently exist. Any changes to this design parameter or the USAR must conform to the requirements of 10 CFR 50.59. Furthermore, sufficient detail relating to these features exists in LCOs to ensure any changes which may affect safety require prior NRC review and approval. Features with a potential to affect safety are sufficiently addressed by LCOs. Changes to other features, if altered in accordance with 10 CFR 50.59, will not have a significant effect on safety, and the criteria of 10 CFR 50.36(c)(4) for including as a Design Feature are not met. Therefore, removing this detail from the Technical Specifications, while maintaining the detail in the USAR, will not impact safe operation of the facility, and is not required to be in the ITS to provide adequate protection of the public health and safety.

LA.6 CTS Figure 5.1.3-1 contains Notes and additional information that are proposed to be relocated to the USAR. Note (b) specifies the height of the NMP2 stack, [redacted] that the NMP2 Radioactive Liquid Discharge is on the [redacted] Ontario. Additional information on CTS Figure 5.1.3-1 [redacted] of the NMP2 Reactor Building Vent, and that the Energy [redacted], adjoining picnic area, and Lake Road are unrestricted areas [redacted]ndary accessible to members of the public. Any changes to this information or the USAR must conform to the requirements of 10 CFR 50.59. Features with a potential to affect safety are sufficiently addressed by LCOs. Changes to other features, if altered in accordance with 10 CFR 50.59, will not have a significant effect on safety, and the criteria of 10 CFR 50.36(c)(4) for including as a Design Feature are not met. Therefore,

TECHNICAL CHANGES - LESS RESTRICTIVE

LA.6 (cont'd) removing this detail from the Technical Specifications, while maintaining the detail in the USAR, will not impact safe operation of the facility, and is not required to be in the ITS to provide adequate protection of the public health and safety.

"Specific"

L.1 CTS 5.3.1 has been modified to allow a limited number of lead fuel assemblies that have not completed representative testing to be placed in nonlimiting core regions (ITS 4.2.1). This allowance provides recognition of a specific kind of special test with lead test assemblies that may be performed. This is intended to avoid confusion regarding whether a Technical Specifications change is required to conduct the test. The requirements of 10 CFR 50.59 regarding conducting special tests remain applicable, and are sufficient to ensure that a limited number of lead test assemblies placed in nonlimiting core regions will not have a significant effect on safety (which is the criteria of 10 CFR 50.36(c)(4) for including as a Design Feature). This change is in conformance with Supplement 1 of Generic Letter 90-02.

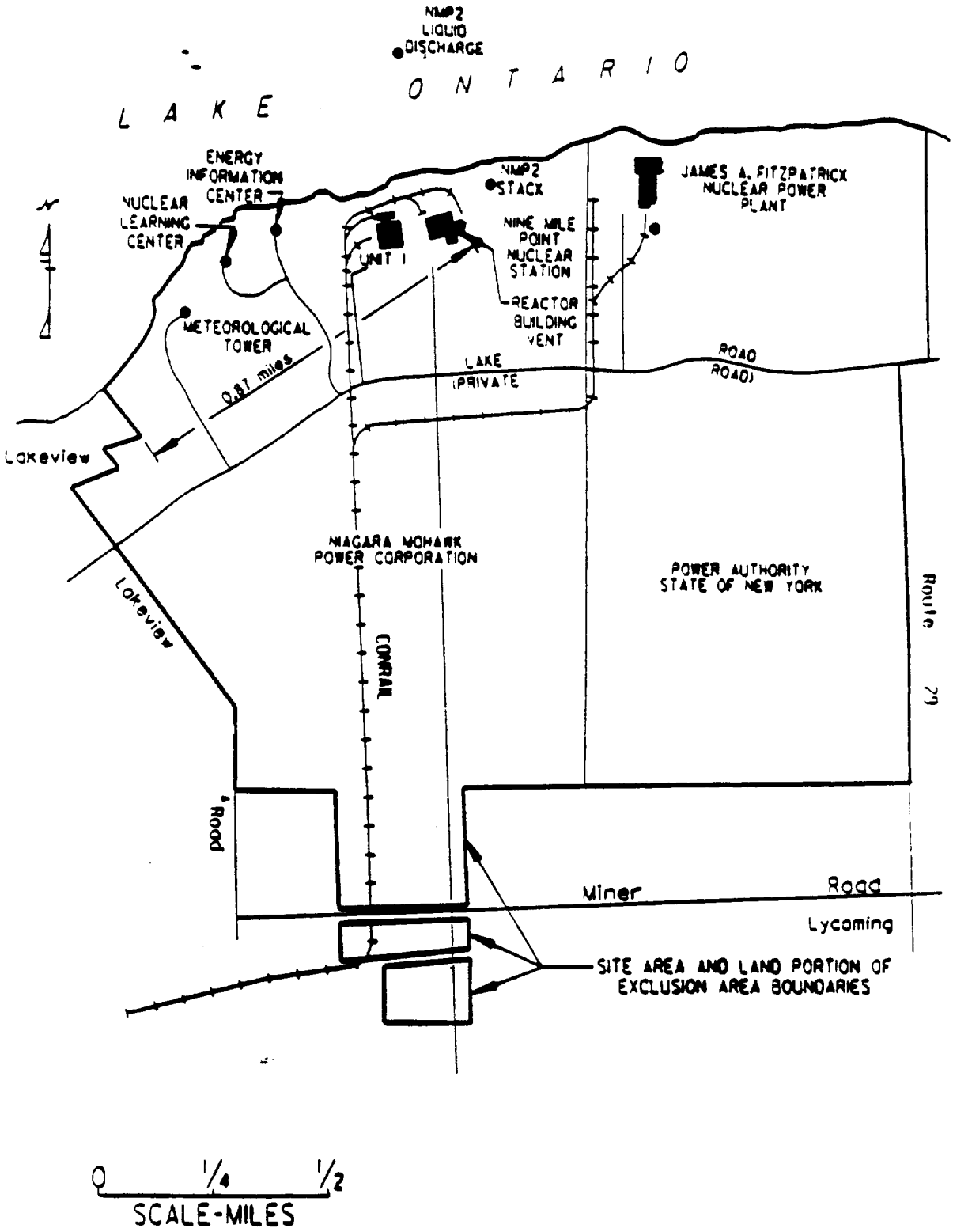

Figure 4.1-1 (Page 1 of 1)
Site Area and Land Portion of Exclusion Area Boundaries

DISCUSSION OF CHANGES
D 4.0 Administrative Controls, D 4.1.1 Special Reports and D 4.2 Major Changes to Liquid, Gaseous, and Solid Radwaste Treatment Systems

ADMINISTRATIVE

In the relocation and conversion of the Nine Mile Point Unit 2 current Technical Specifications (CTS) to the proposed Offsite Dose Calculation Manual (ODCM) used in support of the Improved Technical Specifications (ITS), certain wording preferences or conventions are adopted that do no result in technical changes (either actual or interpretational). Editorial changes, the elimination of redundant wording, reformatting and revised numbering are adopted to make the ODCM consistent with ITS.

In the specific case of the Administrative Controls, the new Specification number is D 4.0.

In the specific case of Special Reports, the new Specification number is D 4.1.1.

In the specific case of Major Changes to Liquid, Gaseous, and Solid Radwaste Treatment Systems, the new Specification number is D 4.2.

PART I - RADIOLOGICAL EFFLUENT CONTROLS

SECTION 4.0 ADMINISTRATIVE CONTROLS

4.0 ADMINISTRATIVE CONTROLS

The ODCM Specifications are subject to Technical Specifications Section 5.6.2, "Annual Radiological Environmental Operating Report," Section 5.6.3, "Radioactive Effluent Release Report," and Section 5.5.1, "Offsite Dose Calculation Manual.

D 4.1 REPORTING REQUIREMENTS

D 4.1.1 Special Reports

Special Reports shall be submitted in accordance with 10 CFR 50.4 within the time period specified for each report.

D 4.2 MAJOR CHANGES TO LIQUID, GASEOUS, AND SOLID RADWASTE TREATMENT SYSTEM

----------NOTE----------
Licensees may choose to submit this information as part of the annual FSAR update.

Licensee-initiated major changes to the radwaste treatment systems (liquid, gaseous, and solid):

a. Shall be reported to the Commission in the Radioactive Effluent Release report for the period in which the evaluation was reviewed by the SORC. The discussion of each change shall contain:

   1. A summary of the evaluation that led to the determination that the change could be made in accordance with 10 CFR 50.59.

   2. Sufficient detailed information to totally support the reason for the change without benefit of additional or supplemental information;

   3. A detailed description of the equipment, components, and processes involved and the interfaces with other plant systems;

   4. An evaluation of the change, which shows the predicted releases of radioactive materials in liquid and gaseous effluents and/or quantity of solid waste that differ from those previously predicted in the license application and amendments thereto;

   5. An evaluation of the change, which shows the expected maximum exposures to a MEMBER OF THE PUBLIC in the UNRESTRICTED AREA and to the general population that differ from those previously estimated in the license application and amendments thereto;

   6. A comparison of the predicted releases of radioactive materials, in liquid and gaseous effluents and in solid waste, to the actual releases for the period that precedes the time when the change is to be made;

   7. An estimate of the exposure to plant operating personnel as a result of the change; and

(Continued)

D 4.2 MAJOR CHANGES TO LIQUID, GASEOUS, AND SOLID RADWASTE TREATMENT SYSTEM (continued)

8. Documentation of the fact that the change was reviewed and found acceptable by the SORC.

b. Shall become effective upon review and acceptance by the SORC.

PART I - RADIOLOGICAL EFFLUENT CONTROLS

SECTION 6.0

ADMINISTRATIVE CONTROLS

4.0 Administrative Controls

The ODCM Specifications are subject to Technical Specifications Section 5.6.2, "Annual Radiological Environmental Operating Report," Section 5.6.3, "Radioactive Effluent Release Report," and Section 5.5.1, "Offsite Dose Calculation Manual.

page break I 4.0-1

4.1 Reporting Requirements

4.1.1 Special Reports

Special Reports shall be submitted in accordance with 10 CFR 50.4 within the time period specified for each report.

See section 5.6.2 of ITS

ADMINISTRATIVE CONTROLS

ANNUAL RADIOLOGICAL ENVIRONMENTAL OPERATING REPORT

5.1.1 6.9.1.7 The Annual Radiological Environmental Operating Report covering the operation of the unit during the previous calendar year shall be submitted by May 15 ~~before May 1 of each year~~. ~~The initial report shall be submitted before May 1 of the year after the plant achieves initial criticality.~~

The ~~Annual Radiological Environmental Operating~~ Report shall include summaries, interpretations, and analysis of trends of the results of the radiological environmental surveillance activities for the report period, including a comparison, as appropriate, with operational studies, operational controls, previous environmental surveillance reports, and an assessment of the observed impact of the plant operation on the environment. The reports shall also include the land use census required by CONTROL 3.12.2. — 3.5.2

monitoring program

Delete these pages

The Annual Radiological Environmental Operating Reports shall include the results of analysis of all radiological environmental samples and of all environmental radiation measurements taken during the period pursuant to the locations specified in the tables and figures in the OFFSITE DOSE CALCULATION MANUAL, as well as summarized and tabulated results of these analyses and measurements in the format of the tables in the Radiological Assessment Branch Technical Position, Revision 1, November 1979. In the event that some individual results are not available for inclusion with the report, the report shall be submitted noting and explaining the reasons for the missing results. The missing data shall be submitted as soon as possible in a supplemental report.

The reports shall also include the following: a summary description of the Radiological Environmental Monitoring Program; at least two legible maps** covering all sampling locations keyed to a table giving distances and directions from the centerline of one reactor; the results of licensee participation in the Interlaboratory Comparison Program, required by CONTROL 3.12.3; discussion of all deviations from the Sampling Schedule of Table 3.12.1-1; and discussion of all analyses in which the LLD required by Table 4.12.1-1 was not achievable.

3.5.3

5

3.5.1-3

NOTES

* A single submittal may be made for a multiple unit site. The submittal should combine those sections that are common to all units at the site.

** One map shall cover stations near the SITE BOUNDARY; a second shall include the more distant stations.

See 5.6.3 ITS

SEMIANNUAL RADIOACTIVE EFFLUENT RELEASE REPORT*

6.9.1.8 Routine Semiannual Radioactive Effluent Release Reports covering the operation of the unit during the previous 6 months of operation shall be submitted within 60 days after January 1 and July 1 of each year. The period of the first report shall begin with the date the plant achieves initial criticality.

The Semiannual Radioactive Effluent Release Reports shall also include a summary of the quantities of radioactive liquid and gaseous effluents and solid waste released from the unit as outlined in Regulatory Guide 1.21, "Measuring, Evaluating, and Reporting Radioactivity in Solid Wastes and Light-Water-Cooled Nuclear Power Plants," Revision 1, June 1974, with data summarized on a quarterly basis following the format of Appendix B thereof. For solid wastes, the format for Table 3 in Appendix B shall be supplemented with three additional categories; class of solid wastes (as defined by 10 CFR 61), type of container (e.g., LSA, Type A, Type B, Large Quantity), and SOLIDIFICATION agent or absorbent (e.g., cement, urea formaldehyde).

The Semiannual Radioactive Effluent Release Report to be submitted within 60 days after January 1 of each year shall include an annual summary of hourly meteorological data collected over the previous year. This annual summary may be either in the form of an hour-by-hour listing on magnetic tape of wind speed, wind direction, atmospheric stability and precipitation (if measured), or in the form of joint frequency distribution of wind speed, wind direction, and atmospheric stability.** This same report shall also include an assessment of the radiation doses from the radioactive liquid and gaseous effluents released from the unit during the previous calendar year. The same report shall also include an assessment of the radiation doses from radioactive liquid and gaseous effluents to MEMBERS OF THE PUBLIC from their activities inside the SITE BOUNDARY (Figure 5.1.3-1) during the report period. All assumptions used in making these assessments, i.e., specific activity, exposure time, and location, shall be included in these reports. The assessment of radiation doses shall be performed in accordance with the methodology and parameters in the OFFSITE DOSE CALCULATION MANUAL (ODCM).

The Semiannual Radioactive Effluent Release Report to be submitted within 60 days after January 1 of each year shall also include an assessment of radiation doses to the likely most exposed MEMBER OF THE PUBLIC from reactor releases and other nearby uranium fuel cycle sources, including doses from primary effluent pathways and direct radiation, for the previous calendar year to show conformance with 40 CFR 190, "Environmental Radiation Protection Standards for Nuclear Power Operation." Acceptable methods for calculating the dose contribution from liquid and gaseous effluents are given in the ODCM.

The Semiannual Radioactive Effluent Release Reports shall include a list and description of unplanned releases from the site to UNRESTRICTED AREAS of radioactive materials in gaseous and liquid effluents made during the reporting period.

---

* A single submittal may be made for a multiple unit site. The submittal should combine those sections that are common to all units at the site; however, for units with separate radwaste systems, the submittal shall specify the releases of radioactive material from each unit.

** In lieu of submission with the Semiannual Radioactive Effluent Release Report, the licensee has the option of retaining this summary of required meteorological data on site in a file that shall be provided to the NRC upon request.

SEMIANNUAL RADIOACTIVE EFFLUENT RELEASE REPORT

6.9.1.8 (Continued)

The Semiannual Radioactive Effluent Release Reports shall include any changes made during the reporting period to the PROCESS CONTROL PROGRAM (PCP) and to the OFFSITE DOSE CALCULATION MANUAL (ODCM), pursuant to Technical Specification 6.13 and CONTROL 6.14, respectively, as well as any major change to liquid, gaseous, or solid radwaste treatment systems pursuant to CONTROL 6.15. It shall also include a listing of new locations for dose calculations and/or environmental monitoring identified by the land use census pursuant to CONTROL 3.12.2.

The Semiannual Radioactive Effluent Release Reports shall also include the following: an explanation of why the inoperability of liquid or gaseous effluent monitoring instrumentation was not corrected within the time specified in CONTROLS 3.3.7.9 or 3.3.7.10 respectively, and a description of the events leading to liquid holdup tanks exceeding the limits of Technical Specification 3.11.1.4.

6.14 OFFSITE DOSE CALCULATION MANUAL

See 5.5.1 ITS

6.14.1 The OFFSITE DOSE CALCULATION MANUAL (ODCM) shall be approved by the Commission before implementation.

6.14.2 Licensee-initiated changes to the ODCM:

a. Shall be submitted to the Commission in the Semiannual Radioactive Effluent Release Report for the period in which the change(s) was made effective. This submittal shall contain:

   1. Sufficiently detailed information to totally support the rationale for the change without benefit of additional or supplemental information. Information submitted should consist of a package of those pages of the ODCM to be changed; each page should be numbered, dated, and marked with the revision number; appropriate analyses or evaluations justifying the change(s) should be included;

   2. A determination that the change will not reduce the accuracy or reliability of dose calculations or setpoint determinations; and

   3. Documentation of the fact that the SORC has reviewed the change and found it acceptable.

b. Shall become effective upon review and acceptance by the SORC.

Major changes ... [redacted]

4.2

4.2 ~~6.15.2~~ MAJOR CHANGES TO LIQUID, GASEOUS, AND SOLID RADWASTE TREATMENT SYSTEMS

4 ~~6.15.2~~ Licensee-initiated major changes to the radwaste treatment systems (liquid, gaseous, and solid):

a. Shall be reported to the Commission in the ~~Semiannual~~ Radioactive Effluent Release Report for the period in which the evaluation was reviewed by the SORC. The discussion of each change shall contain:

1. A summary of the evaluation that led to the determination that the change could be made in accordance with 10 CFR 50.59.

2. Sufficient detailed information to totally support the reason for the change without benefit of additional or supplemental information;

3. A detailed description of the equipment, components, and processes involved and the interfaces with other plant systems;

4. An evaluation of the change, which shows the predicted releases of radioactive materials in liquid and gaseous effluents and/or quantity of solid waste that differ from those previously predicted in the license application and amendments thereto;

5. An evaluation of the change, which shows the expected maximum exposures to a MEMBER OF THE PUBLIC in the UNRESTRICTED AREA and to the general population that differ from those previously estimated in the license application and amendments thereto;

6. A comparison of the predicted releases of radioactive materials, in liquid and gaseous effluents and in solid waste, to the actual releases for the period that precedes the time when the change is to be made;

7. An estimate of the exposure to plant operating personnel as a result of the change; and

8. Documentation of the fact that the change was reviewed and found acceptable by the SORC.

b. Shall become effective upon review and acceptance by the SORC.

NOTE — Licensees may choose to submit this information ~~called for in this CONTROL~~ as part of the annual FSAR update.

PART II - CALCULATIONAL METHODOLOGIES

1.0 LIQUID EFFLUENTS

Service Water A and B, Cooling Tower Blowdown and the Liquid Radioactive Waste Discharges comprise the Radioactive Liquid Effluents at Unit 2. Presently there are no temporary outdoor tanks containing radioactive water capable of affecting the nearest known or future water supply in an unrestricted area. NUREG 0133 and Regulatory Guide 1.109, Rev. 1 were followed in the development of this section.

1.1 Liquid Effluent Monitor Alarm Setpoints

1.1.1 Basis

The concentration of radioactive material released in liquid effluents to UNRESTRICTED AREAS (see Figure D 1.0-1) shall be limited to ten times the concentrations specified in 10 CFR 20, Appendix B, Table 2, Column 2, for radionuclides other than dissolved or entrained noble gases. For dissolved or entrained nobles gases, the concentration shall be limited to 2E-04 uCi/ml total activity.

1.1.2 Setpoint Determination Methodology

1.1.2.1 Liquid Radwaste Effluent Radiation Alarm Setpoint

The Liquid Radioactive Waste System Tanks are pumped to the discharge tunnel which in turn flows directly to Lake Ontario. At the end of the discharge tunnel in Lake Ontario, a diffuser structure has been installed. Its purpose is to maintain surface water temperatures low enough to meet thermal pollution limits. However, it also assists in the near field dilution of any activity released. Service Water and the Cooling Tower Blowdown are also pumped to the discharge tunnel and will provide dilution. If the Service Water or the Cooling Tower Blowdown is found to be contaminated, then its activity will be accounted for when calculating the permissible radwaste effluent flow for a Liquid Radwaste discharge. The Liquid Radwaste System Monitor provides alarm and automatic termination of release if radiation levels above its alarm setpoint are detected.

The radiation detector is a sodium iodide crystal. It is a scintillation device. The crystal is sensitive to gamma and beta radiation. However, because of the metal walls of the sample chamber and the absorption characteristics of water, the monitor is not particularly sensitive to beta radiation. Actual detector response $\sum_i (CG_i/CF_i)$, cpm, has been evaluated by placing a sample of typical radioactive waste into the monitor and recording the gross count rate, cpm. A calibration ratio was developed by dividing the noted detector response, $\sum_i (CG_i/CF_i)$ cpm, by total concentration of activity $\sum_i (CG_i)$, uCi/cc. The quantification of the gamma activity was completed with gamma spectrometry equipment whose calibration is traceable to NIST. This calibration ratio verified the manufacturer's prototype calibration, and any subsequent transfer calibrations performed. The current calibration factor (expressed as the reciprocal conversion factor, uCi/ml/cpm), will be used for subsequent setpoint calculations in the determination of detector response:

$$\sum_i (CG_i/CF_i) = \sum_i (CG_i/CF_i)$$

Where the factors are as defined above.

For the calculation of RDF = $\sum$ EC fraction = $\sum_i (C_i/EC_i)$ the contribution from non gamma emitting nuclides except tritium will be initially estimated based on the expected ratios to quantified nuclides as listed in the FSAR Table 11.2.5. Fe-55, Sr-89 and Sr-90 are 2.5, 0.25 and 0.02 times the concentration of Co-60. These values may be replaced by ratios calculated from analysis of composite samples.

Tritium concentration is assumed to equal the latest concentration detected in the monthly tritium analysis (performed offsite) of liquid radioactive waste tanks discharged.

Nominal flow rates of the Liquid Radioactive Waste System Tanks discharged is < 165 gpm while dilution flow from the Service Water Pumps, and Cooling Tower Blowdown cumulatively is typically over 10,200 gpm. Because of the large amount of dilution the alarm setpoint could be substantially greater than that which would correspond to the concentration actually in the tank. Potentially a discharge could continue even if the distribution of nuclides in the tank were substantially different from the grab sample obtained prior to discharge which was used to establish the detector alarm point. To avoid this possibility of "Non representative Sampling" resulting in erroneous assumptions about the discharge of a tank, the tank is recirculated for a minimum of 2.5 tank volumes prior to sampling.

This monitor's setpoint takes into account the dilution of Radwaste Effluents provided by the Service Water and Cooling Tower Blowdown flows. Detector response for the nuclides to be discharged (cpm) is multiplied by the Actual Dilution Factor (dilution flow/waste stream flow) and divided by the Required Dilution Factor (total fraction of the effluent concentration in the waste stream). A safety factor is used to ensure that the limit is never exceeded. Service Water and Cooling Tower Blowdown are normally non-radioactive. If they are found to be contaminated prior to a Liquid Radwaste discharge then an alternative equation is used to take into account the contamination. If they become contaminated during a Radwaste discharge, then the discharge will be immediately terminated and the situation fully assessed.

Normal Radwaste Effluent Alarm Setpoint Calculation:

Alarm Setpoint $\leq$ 0.8 * TDF/PEF * TGC/CF * 1/RDF + Background.

Where:

Alarm Setpoint	=	The Radiation Detector Alarm Setpoint, cpm
0.8	=	Safety Factor, unitless
TDF	=	Nonradioactive dilution flow rate, gpm. Service Water Flow ranges from 30,000 to 58,000 gpm. Blowdown flow is typically 10,200 gpm
C_i	=	Concentration of isotope i in Radwaste tank prior to dilution, uCi/ml (gamma + non-gamma emitters)

CF_i	=	Detector response for isotope i, net uCi/ml/cpm See Table D 2-1 for a list of nominal values
PEF	=	The permissible Radwaste Effluent Flow rate, gpm, 165 gpm is the maximum value used in this equation
EC_i	=	Ten times the effluent concentration limit for isotope i from 10 CFR 20 Appendix B, Table 2, Column 2, uCi/ml
Background	=	Detector response when sample chamber is filled with nonradioactive water, cpm
CF	=	Monitor Conversion Factor, uCi/ml/cpm, determined at each calibration of the effluent monitor
CG_i	=	Concentration of gamma emitting nuclide in Radwaste tank prior to dilution, uCi/ml
$TGC = \sum CG_i$	=	Summation of all gamma emitting nuclides (which monitor will respond to)
$\sum(CG_i/CF_i)$	=	The total detector response when exposed to the concentration of nuclides in the Radwaste tank, cpm
$RDF = \sum_i(C_i/EC_i)$	=	The total fraction of ten times the 10 CFR 20, Appendix B, Table 2, Column 2 limit that is in the Radwaste tank, unitless. This is also known as the Required Dilution Factor (RDF), and includes non-gamma emitters
TGC/CF	=	An approximation to $\sum_i(CG_i/CF_i)$ using CF determined at each calibration of the effluent monitor
TDF/PEF	=	An approximation to (TDF + PEF)/PEF, the Actual Dilution Factor in effect during a discharge.

Permissible effluent flow, PEF, shall be calculated to determine that ten times the effluent concentration will not be exceeded in the discharge canal.

$$PEF = \frac{\text{(Dilution Flow) (1 - Fraction Tempering)}}{\text{(RDF) 1.5}}$$

Fraction Tempering = A diversion of some fraction of discharge flow to the intake canal for the purpose of temperature control.

If Actual Dilution Factor is set equal to the Required Dilution Factor, then the alarm points required by the above equations correspond to a concentration of 80% of the Radwaste Tank concentration. No discharge could occur, since the monitor would be in alarm as soon as the discharge commenced. To avoid this situation, maximum allowable radwaste discharge flow is calculated using a multiple (usually 1.5 to 2) of the Required Dilution Factor, resulting in discharge canal concentration of 2/3 to 1/2 of ten times the effluent concentration prior to alarm and termination of release. In performing the alarm calculation, the smaller of 165 gpm (the maximum possible flow) and PEF will be used.

To ensure the alarm setpoint is not exceeded, an alert alarm is provided. The alert alarm will be set in accordance with the equation above using a safety factor of 0.5 (or lower) instead of 0.8.

1.1.2.2 Contaminated Dilution Water Radwaste Effluent Monitor Alarm Setpoint Calculation:

The allowable discharge flow rate for a Radwaste tank, when one of the normal dilution streams (Service Water A, Service Water B, or Cooling Tower Blowdown) is contaminated, will be calculated by an iterative process. Using Radwaste tank concentrations with a total liquid effluent flow rate, the resulting fraction of ten times the effluent concentration in the discharge canal will be calculated.

$$FEC = \sum_s [F_s / \sum_s (F_s) \sum_i (C_{is} \div EC_i)]$$

Then the permissible radwaste effluent flow rate is given by:

$$PEF = \frac{\text{Total Radwaste Effluent Flow}}{FEC}$$

The corresponding Alarm Setpoint will then be calculated using the following equation, with PEF limited as above.

$$\text{Alarm Setpoint} \leq 0.8 \quad \frac{TGC/CF}{FEC} + \text{Background}$$

Where:

Alarm Setpoint	=	The Radiation Detector Alarm Setpoint, cpm
0.8	=	Safety Factor, Unitless
F_s	=	An Effluent flow rate for stream s, gpm
C_i	=	Concentration of isotope i in Radwaste tank prior to dilution, uCi/ml
C_{is}	=	Concentration of isotope i in Effluent stream s including the Radwaste Effluent tank undiluted, uCi/ml
CF	=	Average detector response for all isotopes in the waste stream, net uCi/ml/cpm
EC_i	=	Ten times the effluent concentration limit for isotope i from 10CFR20 Appendix B, Table 2, Column 2, uCi/ml
PEF	=	The permissible Radwaste Effluent Flow rate, gpm
Background	=	Detector response when sample chamber is filled with nonradioactive water, cpm
TGC/CF = $\sum_i (CG_i/CF)$	=	The total detector response when exposed to the concentration of nuclides in the Radwaste tank, cpm

$\sum_s [F_s C_{is}]$	=	The total activity of nuclide i in all Effluent streams, uCi-gpm/ml
$\sum_s [F_s]$	=	The total Liquid Effluent Flow rate, gpm (Service Water & CT Blowdown & Radwaste)

1.1.2.3 Service Water and Cooling Tower Blowdown Effluent Alarm Setpoint

These monitor setpoints do not take any credit for dilution of each respective effluent stream. Detector response for the distribution of nuclides potentially discharged is divided by the total EC fraction of the radionuclides potentially in the respective stream. A safety factor is used to ensure that the limit is never exceeded.

Service Water and Cooling Tower Blowdown are normally non-radioactive. If they are found to be contaminated by statistically significant increase in detector response then grab samples will be obtained and analysis meeting the LLD requirements of Table D 3.1.1-1 completed so that an estimate of offsite dose can be made and the situation fully assessed.

Service Water A and B and the Cooling Tower Blowdown are pumped to the discharge tunnel which in turn flows directly to Lake Ontario. Normal flow rates for each Service Water Pump is 10,000 gpm while that for the Cooling Tower Blowdown may be as much as 10,200 gpm. Credit is not taken for any dilution of these individual effluent streams.

The radiation detector is a sodium iodide crystal. It is a scintillation device. The crystal is sensitive to gamma and beta radiation. However, because of the metal walls in its sample chamber and the absorption characteristics of water, the monitor is not particularly sensitive to beta radiation.

Detector response $\sum_i (C_i/CF_i)$ has been evaluated by placing a diluted sample of Reactor Coolant (after a two hour decay) in a representative monitor and noting its gross count rate. Reactor Coolant was chosen because it represents the most likely contaminant of Station Waters.

A two hour decay was chosen by judgement of the staff of Nine Mile Point. Reactor Coolant with no decay contains a considerable amount of very energetic nuclides which would bias the detector response term high. However assuming a longer than 2 hour decay is not realistic as the most likely release mechanism is a leak through the Residual Heat Removal Heat Exchangers which would contain Reactor Coolant during shutdowns.

Service Water and Cooling Tower Blowdown Alarm Setpoint Equation:

$$\text{Alarm Setpoint} < 0.8\ 1/CF \sum_i C_i / [\sum_i (C_i/EC_i)] + \text{Background}.$$

Where:

Alarm Setpoint	=	The Radiation Detector Alarm Setpoint, cpm
0.8	=	Safety Factor, unitless
C_i	=	Concentration of isotope i in potential contaminated stream, uCi/ml
CF_i	=	Detector response for isotope i, net uCi/ml/cpm See Table 2-1 for a list of nominal values
EC_i	=	10 time the effluent concentration limit for isotope i from 10 CFR 20 Appendix B, Table 2, Column 2, uCi/ml
Background	=	Detector response when sample chamber is filled with nonradioactive water, cpm
$\sum_i (C_i/CF_i)$	=	The total detector response when exposed to the concentration of nuclides in the potential contaminant, cpm
$\sum_i (C_i/EC_i)$	=	The total fraction of ten times the 10CFR20, Appendix B, Table 2, Column 2 limit that is in the potential contaminated stream, unitless.
$(1/CF)\sum_i C_i$	=	An approximation to $\sum_i (C_i/CF_i)$, determined at each calibration of the effluent monitor
CF	=	Monitor Conversion Factor, uCi/ml/cpm

1.2 Liquid Effluent Concentration Calculation

This calculation documents compliance with Section D 3.1.1 of Part I:

The concentration of radioactive material released in liquid effluents to UNRESTRICTED AREAS (see Figure D 1.0-1) shall be limited to ten times the concentrations specified in 10 CFR 20, Appendix B, Table 2, Column 2, for radionuclides other than dissolved or entrained noble gases. For dissolved or entrained noble gases, the concentration shall be limited to 2E-04 microcurie/ml total activity.

The concentration of radioactivity from Liquid Radwaste, Service Water A and B and the Cooling Tower Blowdown are included in the calculation. The calculation is performed for a specific period of time. No credit is taken for averaging. The limiting concentration is calculated as follows:

$$FEC = \sum_s [F_s / \sum_s (F_s) \sum_i (C_{is} \div EC_i)]$$

Where: FEC = The fraction of effluent concentration, the ratio at the point of discharge of the actual concentration to ten times the limiting concentration of 10 CFR 20, Appendix B, Table 2, Column 2, for

		radionuclides other than dissolved or entrained noble gases, unitless
C_{is}	=	The concentration of nuclide i in a particular effluent stream s, uCi/ml
F_s	=	The flow rate of a particular effluent stream s, gpm
EC_i	=	10 times the limiting concentration of a specific nuclide i from 10CFR20, Appendix B, Table 2, Column 2 (for noble gases, the concentration shall be limited to 2E-4 microcurie/ml), uCi/ml
$\sum_i (C_{is}/EC_i)$	=	The effluent consentration fraction of stream s prior to dilution by other streams
$\sum_s (F_s)$	=	The total flow rate of all effluent streams s, gpm

A value of less than one for the EC fraction is required for compliance.

1.3 Liquid Effluent Dose Calculation Methodology

The dose or dose commitment to a MEMBER OF THE PUBLIC from radioactive materials in liquid effluents released, from each unit, to UNRESTRICTED AREAS (see Figure D 1.0-1) shall be limited:

a. During any calendar quarter to less than or equal to 1.5 mrem to the whole body and to less than or equal to 5 mrem to any organ, and

b. During any calendar year to less than or equal to 3 mrem to the whole body and to less than or equal to 10 mrem to any organ.

Doses due to Liquid Effluents are calculated monthly for the fish and drinking water ingestion pathways and the external sediment exposure pathways from all detected nuclides in liquid effluents released to the unrestricted areas using the following expression from NUREG 0133, Section 4.3.

$$D_t = \sum_i [A_{it} \sum_L (\Delta T_L C_{iL} F_L)]$$

Where:

D_t	=	The cumulative dose commitment to the total body or any organ, t from the liquid effluents for the total time period $\sum_L (\Delta T_L)$, mrem
ΔT_L	=	The length of the L th time period over which C_{iL} and F_L are averaged for all liquid releases, hours
C_{iL}	=	The average concentration of radionuclide, i, in undiluted liquid effluents during time period ΔT_L from any liquid release, uCi/ml
A_{it}	=	The site related ingestion dose commitment factor for the maximum individual to the total body or any organ t for each identified principal gamma or beta emitter, mrem/hr per uCi/ml. Table D 2-2.

F_L = The near field average dilution factor for C_{il} during any liquid effluent release. Defined as the ratio of the maximum undiluted liquid waste flow during release to the product of the average flow from the site discharge structure to unrestricted receiving waters times 5.9. (5.9 is the site specific applicable factor for the mixing effect of the discharge structure.) See the Nine Mile Point Unit 2 Environmental Report - Operating License Stage, Table 5.4-2 footnote 1.

1.4 Liquid Effluent Sampling Representativeness

There are four tanks in the radwaste system designed to be discharged to the discharge canal. These tanks are labeled 4A, 4B, 5A, and 5B.

Liquid Radwaste Tank 5A and 5B at Nine Mile Point Unit 2 contain a sparger spray ring which assists the mixing of the tank contents while it is being recirculated prior to sampling. This sparger effectively mixes the tank four times faster than simple recirculation.

Liquid Radwaste Tank 4A and 4B contain a mixing ring but no sparger. No credit is taken for the mixing effects of the ring. Normal recirculation flow is 150 gpm for tank 5A and 5B, 110 gpm for tank 4A and 4B while each tank contains up to 25,000 gallons although the entire contents are not discharged. To assure that the tanks are adequately mixed prior to sampling, it is a plant requirement that the tank be recirculated for the time required to pass 2.5 times the volume of the tank:

$$\text{Recirculation Time} = 2.5T/RM$$

Where:

Recirculation Time	=	Is the minimum time to recirculate the Tank, min
2.5	=	Is the plant requirement, unitless
T	=	Is the tank volume, gal
R	=	Is the recirculation flow rate, gpm.
M	=	Is the factor that takes into account the mixing of the sparger, unitless, four for tank 5A and B, one for tank 4A and B.

Additionally, the Alert Alarm setpoint of the Liquid Radwaste Effluent monitor is set at approximately 60% of the High alarm setpoint. This alarm will give indication of incomplete mixing with adequate margin before exceeding ten times the effluent concentration.

Service Water A and B and the Cooling Tower Blowdown are sampled from the radiation monitor on each respective stream. These monitors continuously withdraw a sample and pump it back to the effluent stream. The length of tubing between the continuously flowing sample and the sample spigot contains less than 200 ml which is adequately purged by requiring a purge of at least 1 liter when grabbing a sample.

1.5 Liquid Radwaste System Operability

The Liquid Radwaste Treatment System shall be OPERABLE and used when projected doses due to liquid radwaste effluents would exceed 0.06 mrem to the whole body or 0.2 mrem to any organ in a 31-day period. Cumulative doses will be determined at least once per 31 days (as indicated in Section 1.3) and doses will also be projected if the radwaste treatment systems are not being fully utilized.

The system collection tanks are processed as follows:

1) Low Conductivity (Waste Collector): Radwaste Filter and Radwaste Demineralizer or the Thermex System.

2) High Conductivity (Floor Drains): Regenerant Evaporator or the Thermex System.

3) Regenerant Waste: If resin regeneration is used at NMP-2; the waste will be processed through the regenerant evaporator or Thermex System.

The dose projection indicated above will be performed in accordance with the methodology of DSR 3.1.2.1.

2.0 GASEOUS EFFLUENTS

The gaseous effluent release points are the stack and the combined Radwaste/Reactor Building vent. The stack effluent point includes Turbine Building ventilation, main condenser offgas (after charcoal bed holdup), and Standby Gas Treatment System exhaust. NUREG 0133 and Regulatory Guide 1.109, Rev. 1 were followed in the development of this section.

2.1 Gaseous Effluent Monitor Alarm Setpoints

2.1.1 Basis

The dose rate from radioactive materials released in gaseous effluents from the site to areas at or beyond the SITE BOUNDARY (see Figure D 1.0-1) shall be limited to the following:

a. For noble gases: Less than or equal to 500 mrem/yr to the whole body and less than or equal to 3000 mrem/yr to the skin, and

b. For iodine-131, for iodine-133, for tritium, and for all radionuclides with half-lives greater than 8 days: Less than or equal to 1500 mrem/yr to any organ.

The radioactivity rate of noble gases measured downstream of the recombiner shall be limited to less than or equal to 350,000 microcuries/second during offgas system operation.

2.1.2 Setpoint Determination Methodology Discussion

Nine Mile Point Unit 1 and the James A FitzPatrick nuclear plants occupy the same site as Nine Mile Point Unit 2. Because of the independence of these plants' safety systems, control rooms and operating staffs it is assumed that simultaneous accidents are not likely to occur at the different units. However, there are two release points at Unit 2. It is assumed that if an accident were to occur at Unit 2 that both release points could be involved.

The alarm setpoint for Gaseous Effluent Noble Gas Monitors are based on a dose rate limit of 500 mRem/yr to the Whole Body. Since there are two release points at Unit 2, the dose rate limit of 500 mRem/yr is divided equally for each release point, but may be apportioned otherwise, if required. These monitors are sensitive to only noble gases. Because of this it is considered impractical to base their alarm setpoints on organ dose rates due to iodines or particulates. Additionally skin dose rate is never significantly greater than the whole body dose rate. Thus the factor R which is the basis for the alarm setpoint calculation is nominally taken as equal to 250 mRem/yr. If there are significant releases from any gaseous release point on the site (>25 mRem/yr) for an extended period of time then the setpoint will be recalculated with an appropriately smaller value for R.

The high alarm setpoint for the Offgas Noble Gas monitor is based on a limit of 350,000 uCi/sec. This is the release rate for which a FSAR accident analysis was

completed. At this rate the Offgas System charcoal beds will not contain enough activity so that their failure and subsequent release of activity will present a significant offsite dose assuming accident meteorology.

Initially, in accordance with Part I, Section D 3.3.2, the Germanium multichannel analysis systems of the stack and vent will be calibrated with gas standards (traceable to NIST) in accordance with DSR 3.3.2.9. Subsequent calibrations may be performed with gas standards, or with related solid sources. The quarterly Channel Functional Test will include operability of the 30cc chamber and the dilution stages to confirm monitor high range capability. (Appendix D, Gaseous Effluent Monitoring System).

2.1.2.1 Stack Noble Gas Detector Alarm Setpoint Equation:

The stack at Nine Mile Point Unit 2 receives the Offgas after charcoal bed delay, Turbine Building Ventilation and the Standby Gas Treatment system exhaust. The Standby Gas Treatment System Exhausts the primary containment during normal shutdowns and maintains a negative pressure on the Reactor Building to maintain secondary containment integrity. The Standby Gas Treatment will isolate on high radiation detected (by the SGTS monitor) during primary containment purges.

The stack noble gas detector is made of germanium. It is sensitive to only gamma radiation. However, because it is a computer based multichannel analysis system it is able to accurately quantify the activity released in terms of uCi of specific nuclides. Only pure alpha and beta emitters are not detectable, of which there are no common noble gases. A distribution of Noble Gases corresponding to offgas is chosen for the nominal alarm setpoint calculation. Offgas is chosen because it represents the most significant contaminant of gaseous activity in the plant. The release rate Q_i, corresponds to offgas concentration expected with the plant design limit for fuel failure. The alarm setpoint may be recalculated if a significant release is encountered. In that case the actual distribution of noble gases will be used in the calculation.

The following calculation will be used for the initial Alarm Setpoint.

$$\text{Alarm Setpoint, uCi/sec} < \frac{0.8R \quad \sum_i (Q_i)}{\sum_i (Q_i V_i)}$$

0.8	=	Safety Factor, unitless
R	=	Allocation Factor. Normally, 250 mrem/yr; the value must be 500 mrem/yr or less depending upon the dose rate from other release points within the site such that the total dose rate corresponds to < 500 mrem/yr
Q_i	=	The release rate of nuclide i, uCi/sec
V_i	=	The constant for each identified noble gas nuclide accounting for the whole body dose from the elevated finite plume listed on Table D 3-2, mrem/yr per uCi/sec

$\sum_i (Q_i)$	=	The total release rate of noble gas nuclides in the stack effluent, uCi/sec
$\sum_i (Q_i V_i)$	=	The total of the product of each isotope release rate times its respective whole body plume constant, mrem/yr, uCi/sec

The alert alarm is normally set at less than 10% of the high alarm.

2.1.2.2 Vent Noble Gas Detector Alarm Setpoint Equation:

The vent contains the Reactor Building ventilation above and below the refuel floor and the Radwaste Building ventilation effluents. The Reactor Building Ventilation will isolate when radiation monitors detect high levels of radiation (these are separate monitors, not otherwise discussed in the ODCM). Nominal flow rate for the vent is 2.37E5 CFM.

This detector is made of germanium. It is sensitive to only gamma radiation. However, because it is a computer based multichannel analysis system it is able to accurately quantify the activity released in terms of uCi of specific nuclides. Only pure alpha and beta emitters are not detectable, of which there are no common noble gases. A distribution of Noble Gases corresponding to that expected with the design limit for fuel failure offgas is chosen for the nominal alarm setpoint calculation. Offgas is chosen because it represents the most significant contaminant of gaseous activity in the plant. The alarm setpoint may be recalculated if a significant release is encountered. In that case the actual distribution of noble gases will be used in the calculation.

$$\text{Alarm Setpoint, uCi/sec} < \frac{0.8R \sum_i (Q_i)}{(X/Q)_v \sum_i (Q_i K_i)}$$

Where:

0.8	=	Safety Factor, unitless
R	=	Allocation Factor. Normally, 250 mrem/yr; the value must be 500 mrem/yr or less depending upon the dose rate from other release points within the site such that the total rate corresponds to < 500 mrem/yr
Q_i	=	The release rate of nuclide i, uCi/sec
$(X/Q)_v$	=	The highest annual average atmospheric dispersion coefficient at the site boundary as listed in the Final Environmental Statement, NUREG 1085, Table D-2, 2.0E-6 sec/m^3
K_i	=	The constant for each identified noble gas nuclide accounting for the whole body dose from the semi-infinite cloud, listed on Table D 3-3, mrem/yr per uCi/m^3

$\sum_i (Q_i)$	=	The total release rate of noble gas nuclides in the vent effluent, uCi/sec
$\sum_i (Q_i K_i)$	=	The total of the product of the each isotope release rate times its respective whole body immersion constant, mrem/yr per sec/m^3

The alert alarm is normally set at less than 10% of the high alarm.

2.1.2.3 Offgas Pretreatment Noble Gas Detector Alarm Setpoint Equation:

The Offgas system has a radiation detector downstream of the recombiners and before the charcoal decay beds. The offgas, after decay, is exhausted to the main stack. The system will automatically isolate if its pretreatment radiation monitor detects levels of radiation above the high alarm setpoint.

The Radiation Detector contains a plastic scintillator disc. It is a beta scintillation detector. Detector response $\sum_i (C_i/CF_i)$ has been evaluated from isotopic analysis of offgas analyzed on a multichannel analyzer, traceable to NIST. A distribution of offgas corresponding to that expected with the design limit for fuel failure was used to establish the initial setpoint. However, the alarm setpoint may be recalculated using an updated nuclide distribution based on actual plant process conditions. The monitor nominal response values will be confirmed during periodic calibration using a Transfer Standard source traceable to the primary calibration performed by the vendor.

Particulates and Iodines are not included in this calculation because this is a noble gas monitor.

To provide an alarm in the event of failure of the offgas system flow instrumentation, the low flow alarm setpoint will be set at or above 10 scfm, (well below normal system flow) and the high flow alarm setpoint will be set at or below 110 scfm, which is well above expected steady-state flow rates with a tight condenser.

To provide an alarm for changing conditions, the alert alarm will normally be set at 1.5 times nominal full power background to ensure that the Specific Activity Action required by ITS SR 3.7.4.1, are implemented in a timely fashion.

$$\text{Alarm Setpoint, cpm} < 0.8 \frac{(3.50E+05)(2.12\ E-03)\ \sum_i (C_i/CF_i)}{F\ \sum_i (C_i)} + \text{Background}$$

Where:

Alarm Setpoint	=	The alarm setpoint for the offgas pretreatment Noble Gas Detector, cpm
0.8	=	Safety Factor, unitless

350,000	=	The Technical Specification Limit for Offgas Pretreatment, uCi/sec
2.12E-03	=	Unit conversion Factor, 60 sec/min / 28317 cc/CF
C_i	=	The concentration of nuclide, i, in the Offgas, uCi/cc
CF_i	=	The Detector response to nuclide i, uCi/cc/cpm; See Table D 3-1 for a list of nominal values
F	=	The Offgas System Flow rate, CFM
Background	=	The detector response to non-fission gases and general area does rates, cpm
$\sum_i (C_i/CF_i)$	=	The summation of the nuclide concentration divided by the corresponding detector response, net cpm
$\sum_i (C_i)$	=	The summation of the concentration of nuclides in offgas, uCi/cc

2.2 Gaseous Effluents Dose Rate Calculation

Dose rates will be calculated monthly at a minimum to demonstrate that the release of noble gases, tritium, iodines, and particulates with half lives greater than 8 days are within the dose rate limits specified in 10CFR20. These limits are as follows:

The dose rate from radioactive materials released in gaseous effluents from the site to areas at or beyond the SITE BOUNDARY (see Figure D 1.0-1) shall be limited per 10CFR20 to the following:

a. For noble gases: Less than or equal to 500 mrem/yr to the whole body and less than or equal to 3000 mrem/yr to the skin, and

b. For iodine-131, iodine-133, for tritium, and for all radionuclides in particulate form with half-lives greater than 8 days: Less than or equal to 1500 mrem/yr to any organ:

2.2.1 X/Q and W_v - Dispersion Parameters for Dose Rate, Table D 3-23

The dispersion parameters for the whole body and skin dose rate calculation correspond to the highest annual average dispersion parameters at or beyond the unrestricted area boundary. This is at the east site boundary. These values were obtained from the Nine Mile Point Unit 2 Final Environmental Statement, NUREG 1085 Table D-2 for the vent and stack. These were calculated using the methodology of Regulatory Guide 1.111, Rev. 1. The stack was modeled as an elevated release point because its height is more than 2.5 times any adjacent building height. The vent was modeled as a ground level release because even though it is higher than any adjacent building it is not more than 2.5 times the height.

The NRC Final Environmental Statement values for the site boundary X/Q and D/Q terms were selected for use in calculating Effluent Monitor Alarm Points and compliance with Site Boundary Dose Rate specifications because they are conservative

when compared with the corresponding Nine Mile Point Environmental Report values. In addition, the stack "intermittent release" X/Q was selected in lieu of the "continuous" value, since it is slightly larger, and also would allow not making a distinction between long term and short term releases.

The dispersion parameters for the organ dose calculations were obtained from the Environmental Report, Figures 7B-4 (stack) and 7B-8 (vent) by locating values corresponding to currently existing (1985) pathways. It should be noted that the most conservative pathways do not all exist at the same location. It is conservative to assume that a single individual would actually be at each of the receptor locations.

2.2.2 Whole Body Dose Rate Due to Noble Gases

The ground level gamma radiation dose from a noble gas stack release (elevated), referred to as plume shine, is calculated using the dose factors from Appendix B of this document. The ground level gamma radiation dose from a noble gas vent release accounts for the exposure from immersion in the semi-infinite cloud. The dispersion of the cloud from the point of release to the receptor at the east site boundary is factored into the plume shine dose factors for stack releases and through the use of X/Q in the equation for the immersion ground level dose rates for vent releases. The release rate is averaged over the period of concern. The factors are discussed in Appendix B.

Whole body dose rate $(DR)_\gamma$ due to noble gases:

$$(DR)_\gamma = 3.17E\text{-}08 \sum_i [V_i Q_{is} + K_i (X/Q)_v Q_{iv}]$$

Where:

DR_γ	=	Whole body dose rate (mrem/sec)
V_i	=	The constant accounting for the gamma whole body dose rate from the finite plume from the elevated stack releases for each identified noble gas nuclide, i. Listed on Table D 3-2, mrem/yr per uCi/sec
K_i	=	The constant accounting for the gamma whole body dose rate from immersion in the semi-infinite cloud for each identified noble gas nuclide, i. Listed in Table D 3-3, mrem/yr per uCi/m^3 (From Reg. Guide 1.109)
X/Q_v X/Q_s	=	The relative plume concentration at or beyond the land sector site boundary. Average meteorological data is used. Elevated X/Q values are used for the stack releases (s=stack); ground X/Q values are used for the vent releases (v=vent). Listed on Table D 3-23
Q_{is}, Q_{iv}	=	The release rate of each noble gas nuclide i, from the stack (s) or vent (v). Averaged over the time period of concern. (uCi/sec)

3.17E-08 = Conversion Factor; the inverse of the number of seconds in one year. (yr/sec)

2.2.3 Skin Dose Rate Due to Noble Gases

There are two types of radiation from noble gas releases that contribute to the skin dose rate: beta and gamma.

For stack releases this calculation takes into account the dose from beta radiation in a semi infinite cloud by using an immersion dose factor. Additionally, the dispersion of the released activity from the stack to the receptor is taken into account by use of the factor (X/Q). The gamma radiation dose from the elevated stack release is taken into account by the dose factors in Appendix B.

For vent releases the calculations also take into account the dose from the beta (β) and gamma (γ) radiation of the semi infinite cloud by using an immersion dose factor. Dispersion is taken into account by use of the factor (X/Q).

The release rate is averaged over the period of concern.

Skin dose rate $(DR)_{\gamma+\beta}$ due to noble gases:

$$(DR)_{\gamma+\beta} = 3.17E-8 \sum_i [(L_i (X/Q)_s + 1.11 B_i) Q_{is} + (L_i + 1.11 M_i)(X/Q)_v Q_{iv}]$$

Where:

$(DR)_{\gamma+\beta}$ = Skin dose rate (mrem/sec)

L_i = The constant to account for the gamma and beta skin dose rates for each noble gas nuclide, i, from immersion in the semi-infinite cloud, mrem/yr per uCi/m^3, listed on Table D 3-3 (from R.G. 1.109)

M_i = The constant to account for the air gamma dose rate for each noble gas nuclide, i, from immersion in the semi-infinite cloud, mrad/yr per uCi/m^3, listed on Table D 3-3 (from R.G. 1.109)

1.11 = Unit conversion constant, mrem/mrad

.7 = Structural shielding factor, unitless

B_i = The constant accounting for the air gamma dose rate from exposure to the overhead plume of elevated releases of each identified noble gas nuclide, i. Listed on Table D 3-2, mrad/yr per uCi/sec.

$(X/Q)_s$ = The relative plume concentration at or beyond the land
$(X/Q)_v$ sector site boundary. Average meteorological data is used. Elevated X/Q values are used for the stack releases (s=stack); ground X/Q values are used for the vent releases (v=vent).

3.17E-8 = Conversion Factor; the inverse of the number of seconds in a year; (yr/sec)

Q_{iv}, Q_{is} = The release rate of each noble gas nuclide i, from the stack(s) or vent (v) averaged over the time period of concern, uCi/sec.

2.2.4 Organ Dose Rate Due to I-131, I-133, Tritium, and Particulates with Half-lives greater than 8 days.

The organ dose rate is calculated using the dose factors (R_i) from Appendix C. The factor R_i takes into account the dose rate received from the ground plane, inhalation and ingestion pathways. W_s and W_v take into account the atmospheric dispersion from the release point to the location of the most conservative receptor for each of the respective pathways. The release rate is averaged over the period of concern.

Organ dose rates $(DR)_{at}$ due to iodine-131, iodine-133, tritium and all radionuclides in particulate form with half-lives greater than 8 days:

$$(DR)_{at} = 3.17E-8 \sum_j [\sum_i R_{ijat} [W_s Q_{is} + W_v Q_{iv}]]$$

Where:

$(DR)_{at}$ = Organ dose rate (mrem/sec)

R_{ijat} = The factor that takes into account the dose from nuclide i through pathway j to an age group a, and individual organ t. Units for inhalation pathway, mrem/yr per uCi/m^3. Units for ground and ingestion pathways, m^2-mrem/yr per uCi/sec. See Tables D 3-4 through D 3-22).

W_s, W_v = Dispersion parameter either X/Q (sec/m^3) or D/Q (1/m^2) depending on pathway and receptor location. Average meteorological data is used (Table D 3-23). Elevated W_s values are used for stack releases (s=stack); ground W_v values are used for vent releases (v=vent).

Q_{is}, Q_{iv} = The release rates for nuclide i, from the stack (s) and vent (v) respectively, uCi/sec.

When the release rate exceeds 0.75 uCi/sec from the stack or vent, the dose rate assessment shall, also, include JAF and NMP1 dose contributions. The use of the 0.75 uCi/sec release rate threshold is conservative because it is based on the dose conversion

factor (R_i) for the Sr-90 child bone which is significantly higher than the dose factors for the other isotopes present in the stack or vent release.

2.3 Gaseous Effluent Dose Calculation Methodology

Doses will be calculated monthly at a minimum to demonstrate that doses resulting from the release of noble gases, tritium, iodines, and particulates with half lives greater than 8 days are within the limits specified in 10 CFR 50. These limits are as follows:

The air dose from noble gases released in gaseous effluents, from each unit, to areas at or beyond the SITE BOUNDARY (see Figure D 1.0-1) shall be limited to the following.

a. During any calendar quarter: Less than or equal to 5 mrad for gamma radiation and less than or equal to 10 mrad for beta radiation, and

b. During any calendar year: Less than or equal to 10 mrad for gamma radiation and less than or equal to 20 mrad for beta radiation.

The dose to a MEMBER OF THE PUBLIC from iodine-131, iodine-133, tritium, and all radioactive material in particulate form with half-lives greater than 8 days in gaseous effluents released, from each unit, to areas at or beyond the SITE BOUNDARY (see Figure D 1.0-1) shall be limited to the following:

a. During any calendar quarter: Less than or equal to 7.5 mrem to any organ and,

b. During any calendar year: Less than or equal to 15 mrem to any organ.

The VENTILATION EXHAUST TREATMENT SYSTEM shall be OPERABLE and appropriate portions of this system shall be used to reduce releases of radioactivity when the projected doses in 31 days from iodine and particulate releases, from each unit, to areas at or beyond the SITE BOUNDARY (see Figure D 1.0-1) would exceed 0.3 mrem to any organ of a MEMBER OF THE PUBLIC.

2.3.1 W_v and W_s - Dispersion Parameters for Dose, Table D 3-23

The dispersion parameters for dose calculations were obtained chiefly from the Nine Mile Point Unit 2 Environmental Report Appendix 7B. These were calculated using the methodology of Regulatory Guide 1.111 and NUREG 0324. The stack was modeled as an elevated release point because height is more than 2.5 times the height of any adjacent building. The vent was modeled as a combined elevated/ground level release because the vent's height is not more than 2.5 times the height of any adjacent building. Average meteorology over the appropriate time period was used. Dispersion parameters not available from the ER were obtained from C.T. Main Data report dated November, 1985, or the FES.

2.3.2 Gamma Air Dose Due to Noble Gases

Gamma air dose from the stack or vent noble gas releases is calculated monthly. The gamma air dose equation is similar to the gamma dose rate equation except the receptor is air instead of the whole body or skin of whole body. Therefore, the stack noble gas releases use the finite plume air dose factors, and the vent noble gas releases use semi-infinite cloud immersion dose factors. The factor X/Q takes into account the dispersion of vent releases to the most conservative location. The release activity is totaled over the period of concern. The finite plume factor is discussed in Appendix B.

Gamma air dose due to noble gases:

$$D_\gamma = 3.17E\text{-}8 \sum_i [M_i (X/Q)_v Q_{iv} + B_i Q_{is}] \times t$$

D_γ = The gamma air dose for the period of concern, mrad

t = The duration of the dose period of concern, sec

Where all other parameters have been previously defined.

2.3.3 Beta Air Dose Due to Noble Gases

The beta air dose from the stack or vent noble gas releases is calculated using the semi-infinite cloud immersion dose factor in beta radiation. The factor X/Q takes into account the dispersion of releases to the most conservative location.

Beta air dose due to noble gases:

$$D_\beta = 3.17E\text{-}8 \sum_i N_i [(X/Q)_v Q_{iv} + (X/Q)_s Q_{is}] \times t$$

D_β = Beta air dose (mrad) for the period of concern

N_i = The constant accounting for the beta air dose from immersion in the semi-infinite cloud for each identified noble gas nuclide, i. Listed on Table D 3-3, mrad/yr per uCi/m^3. (From Reg. Guide 1.109).

t = The duration of the dose period of concern, sec

Where all other parameters have been previously defined.

2.3.4 Organ Dose Due to I-131, I-133, Tritium and Particulates with half-lives greater than 8 days.

The organ dose is based on the same equation as the dose rate equation except the dose is compared to the 10CFR50 dose limits. The factor R_i takes into account the dose received from the ground plane, inhalation, food (cow milk, cow meat and vegetation) pathways. W_s and W_v take into account the atmospheric dispersion from the release point to the location of the most conservative receptor for each of the respective pathways. The release is totaled over the period of concern. The R_i factors are discussed in Appendix C.

Organ dose D_{at} due to iodine-131, iodine-133, tritium and radionuclides in particulate form with half-lives greater than 8 days.

$$D_{at} = 3.17E-8 \sum_j [\sum_i R_{ijat} [W_s Q_{is} + W_v Q_{iv}]] \times t$$

Where:

D_{at} = Dose to the critical organ t, for age group a, mrem

t = The duration of the dose period of concern, sec

Where all other parameters have been previously defined in Section 2.2.4.

2.4 I-133 and I-135 Estimation

Stack and vent effluent iodine cartridges are analyzed to a sensitivity of at least 1E-12 uCi/cc. If detected in excess of the LLD, the I-131 and I-133 analysis results will be reported directly from each cartridge analyzed. Periodically, (usually quarterly but on a monthly frequency if effluent iodines are routinely detected) a short-duration (12 to 24 hour) effluent sample is collected and analyzed to establish an I-135/I-131 ratio and an I-133/I-131 ratio, if each activity exceeds LLD. The short-duration ratio is used to confirm the routinely measured I-133 values. The short-duration I-135/I-131 ratio (if determined) is used with the I-131 release to estimate the I-135 release. The short-duration I-133/I-131 ratio may be used with the I-131 release to estimate the I-133 release if the directly measured I-133 release appears non-conservative.

2.5 Isokinetic Sampling

Sampling systems for the stack and vent effluent releases are designed to maintain isokinetic sample flow at normal ventilation flow rates. During periods of reduced ventilation flow, sample flow may be maintained at a minimum flow rate (above the calculated isokinetic rate) in order to minimize sample line losses due to particulate deposition at low velocity.

2.6 Use of Concurrent Meteorological Data vs. Historical Data

It is the intent to use dispersion parameters based on historical meteorological data to set alarm points and to determine or predict dose and dose rates in the environment due to gaseous effluents. If effluent levels approach limiting values, meteorological conditions concurrent with the time of release may be used to determine gaseous pathway doses.

2.7 Gaseous Radwaste Treatment System Operation

Part I, Section D 3.2.4 requires the GASEOUS RADWASTE TREATMENT SYSTEM to be in operation whenever the main condenser air ejector system is in operation. The system may be operated for short periods with the charcoal beds bypassed to facilitate

transients. The components of the system which normally should operate to treat offgas are the Preheater, Recombiner, Condenser, Dryer, Charcoal Adsorbers, HEPA Filter, and Vacuum Pump. (See Appendix D, Offgas System).

2.8 Ventilation Exhaust Treatment System Operation

Part I, Section D 3.2.5 requires the VENTILATION EXHAUST TREATMENT SYSTEM to be OPERABLE when projected doses in 31 days due to iodine and particulate releases would exceed 0.3 mrem to any organ of a member of the public. The appropriate components, which affect iodine or particulate release, to be OPERABLE are:

1) HEPA Filter - Radwaste Decon Area
2) HEPA Filter - Radwaste Equipment Area
3) HEPA Filter - Radwaste General Area

Whenever one of these filters is not OPERABLE, iodine and particulate dose projections will be made for 31-day intervals starting with filter inoperability, and continuing as long as the filter remains inoperable, in accordance with DSR 3.2.5.1. Predicted release rates will be used, along with the methodology of Section 2.3.4. (See Appendix D, Gaseous Radiation Monitoring.)

3.0 URANIUM FUEL CYCLE

The "Uranium Fuel Cycle" is defined in 40 CFR Part 190.02 (b) as follows:

"Uranium fuel cycle means the operations of milling of uranium ore chemical conversion of uranium, isotopic enrichment of uranium, fabrication of uranium fuel, generation of electricity by a light-water-cooled nuclear power plant using uranium fuel, and reprocessing of spent uranium fuel, to the extent that these directly support the production of electrical power for public use utilizing nuclear energy, but excludes mining operations, operations at waste disposal sites, transportation of any radioactive material in support of these operations, and the reuse of recovered non-uranium special nuclear and by-product materials from the cycle."

Sections D 3.1.2, D 3.2.2, and D 3.2.3 of Part I requires that when the calculated doses associated with the effluent releases exceed twice the applicable quarter or annual limits, the licensee shall evaluate the calendar year doses and, if required, submit a Special Report to the NRC and limit subsequent releases such that the dose commitment to a real individual from all uranium fuel cycle sources is limited to 25 mrem to the total body or any organ (except the thyroid, which is limited to 75 mrem). This report is to demonstrate that radiation exposures to all real individuals from all uranium fuel cycle sources (including all liquid and gaseous effluent pathways and direct radiation) are less than the limits in 40 CFR Part 190. If releases that result in doses exceeding the 40 CFR 190 limits have occurred, then a variance from the NRC to permit such releases will be requested and if possible, action will be taken to reduce subsequent releases.

The report to the NRC shall contain:

1) Identification of all uranium fuel cycle facilities or operations within 5 miles of the nuclear power reactor units at the site, that contribute to the annual dose of the maximum exposed member of the public.

2) Identification of the maximum exposed member of the public and a determination of the total annual dose to this person from all existing pathways and sources of radioactive effluents and direct radiation.

The total body and organ doses resulting from radioactive material in liquid effluents from Nine Mile Point Unit 2 will be summed with the doses resulting from the releases of noble gases, radioiodines, and particulates. The direct dose components will also be determined by either calculation or actual measurement. Actual measurements will utilize environmental TLD dosimetry. Calculated measurements will utilize engineering calculations to determine a projected direct dose component. In the event calculations are used, the methodology will be detailed as required by Technical Specification 5.6.3. The doses from Nine Mile Point Unit 2 will be added to the doses to the maximum exposed individual that are contributed from other uranium fuel cycle operations within 5 miles of the site.

For the purpose of calculating doses, the results of the Environmental Monitoring Program may be included to provide more refined estimates of doses to a real maximum exposed individual. Estimated doses, as calculated from station effluents, may be replaced by doses calculated from actual environmental sample results.

3.1 Evaluation of Doses From Liquid Effluents

For the evaluation of doses to real members of the public from liquid effluents, the fish consumption and shoreline sediment ground dose will be considered. Since the doses from other aquatic pathways are insignificant, fish consumption and shoreline sediment are the only two pathways that will be considered. The dose associated with fish consumption may be calculated using effluent data and Regulatory Guide 1.109 methodology or by calculating a dose to man based on actual fish sample analysis data. Because of the nature of the receptor location and the extensive fishing in the area, the critical individual may be a teenager or an adult. The dose associated with shoreline sediment is based on the assumption that the shoreline would be utilized as a recreational area. This dose may be derived from liquid effluent data and Regulatory Guide 1.109 methodology or from actual shoreline sediment sample analysis data.

Equations used to evaluate fish and shoreline sediment samples are based on Regulatory Guide 1.109 methodology. Because of the sample medium type and the half-lives of the radionuclides historically observed, the decay corrected portions of the equations are deleted. This does not reduce the conservatism of the calculated doses but increases the simplicity from an evaluation point of view. Table D 3-24 presents the parameters used for calculating doses from liquid effluents.

The dose from fish sample media is calculated as:

$$R_{apj} = \sum_i [C_{if} (U)(D_{aipj}) f] (1E+3)$$

Where:

R_{apj}	=	The total annual dose to organ j, of an individual of age group a, from nuclide i, via fish pathway p, in mrem per year; ex. if calculating to the adult whole body, then $R_{apj} = R_{wb}$ and $D_{aipj} = D_{iWB}$
C_{if}	=	The concentration of radionuclide i in fish samples in pCi/gram
U	=	The consumption rate of fish
1E+3	=	Grams per kilogram
(D_{aipj})	=	The ingestion dose factor for age group a, nuclide i, fish pathway p, and organ j, (Reg. Guide 1.109, Table E-11) (mrem/pCi). ex. when calculating to the adult whole body $D_{aipj} = D_{iWB}$
f	=	The fractional portion of the year over which the dose is applicable

The dose from shoreline sediment sample media is calculated as:

$$R_{apj} = \sum_i [C_{is} (U)(4E+4)(0.3)(D_{aipj}) f]$$

Where:

R_{apj}	=	The total annual dose to organ j, of an individual of age group a, from nuclide i, via the sediment pathway p, in mrem per year; ex. if calculating to the adult whole body, then $R_{apj} = R_{WB}$ and $D_{aipj} = D_{iWB}$
C_{is}	=	The concentration of radionuclide i in shoreline sediment in pCi/gram
U	=	The usage factor, (hr/yr) (Reg. Guide 1.109)
4E+4	=	The product of the assumed density of shoreline sediment (40 kilogram per square meter to a depth of 2.5 cm) times the number of grams per kilogram
0.3	=	The shore width factor for a lake
D_{aipj}	=	The dose factor for age group a, nuclide i, sediment pathway s, and organ j. (Reg. Guide 1.109, Table E-6) (mrem/hr per pCi/m^2); ex. when calculating to the adult whole body $D_{aipj} = D_{iWB}$
f	=	The fractional portion of the year over which the dose is applicable

NOTE: Because of the nature of the receptor location and the extensive fishing in the area, the critical individual may be a teenager or an adult.

3.2 Evaluation of Doses From Gaseous Effluents

For the evaluation of doses to real members of the public from gaseous effluents, the pathways contained in section 2 of the calculational methodologies section will be considered and include ground deposition, inhalation, cows milk, goats milk, meat, and food products (vegetation). However, any updated field data may be utilized that concerns locations of real individuals, real time meteorological data, location of critical receptors, etc. Data from the most recent census and sample location surveys should be utilized. Doses may also be calculated from actual environmental sample media, as available. Environmental sample media data such as TLD, air sample, milk sample and vegetable (food crop) sample data may be utilized in lieu of effluent calculational data.

Doses to members of the public from the pathways considered in section 2 as a result of gaseous effluents will be calculated using the methodology of Regulatory Guide 1.109 or the methodology of the ODCM, as applicable. Doses calculated from environmental sample media will be based on methodologies found in Regulatory Guide 1.109.

3.3 Evaluation of Doses From Direct Radiation

The dose contribution as a result of direct radiation shall be considered when evaluating whether the dose limitations of 40 CFR 190 have been exceeded. Direct radiation doses as a result of the reactor, turbine and radwaste buildings and outside radioactive storage tanks (as applicable) may be evaluated by engineering calculations or by evaluating environmental TLD results at critical receptor locations, site boundary or other special interest locations. For the evaluation of direct radiation doses utilizing environmental TLDs, the critical receptor in question, such as the critical residence, etc., will be compared to the control locations.

The comparison involves the difference in environmental TLD results between the receptor location and the average control location result.

3.4 Doses to Members of the Public Within the Site Boundary

The Semiannual Radioactive Effluent Release Report shall include an assessment of the radiation doses from radioactive liquid and gaseous effluents to members of the public due to their activities inside the site boundary as defined by Figure D 1.0-1. A member of the public, would be represented by an individual who visits the sites' Energy Center for the purpose of observing the educational displays or for picnicking and associated activities.

Fishing is a major recreational activity in the area and on the Site as a result of the salmon and trout populations in Lake Ontario. Fishermen have been observed fishing at the shoreline near the Energy Center from April through December in all weather conditions. Thus, fishing is the major activity performed by members of the public within the site boundary. Based on the nature of the fishermen and undocumented observations, it is conservatively assumed that the maximum exposed individual spends

an average of 8 hours per week fishing from the shoreline at a location between the Energy Center and the Unit 1 facility. This estimate is considered conservative but not necessarily excessive and accounts for occasions where individuals may fish more on weekends or on a few days in March of the year.

The pathways considered for the evaluation include the inhalation pathway with the resultant lung dose, the ground dose pathway with the resultant whole body and skin dose and the direct radiation dose pathway with the associated total body dose. The direct radiation dose pathway, in actuality, includes several pathways. These include: the direct radiation gamma dose to an individual from an overhead plume, a gamma submersion plume dose, possible direct radiation dose from the facility and a ground plane dose (deposition). Because the location is in close proximity to the site, any beta plume submersion dose is felt to be insignificant.

Other pathways, such as the ingestion pathway, are not applicable. In addition, pathways associated with water related recreational activities, other than fishing, are not applicable here. These include swimming, boating and wading which are prohibited at the facility.

The inhalation pathway is evaluated by identifying the applicable radionuclides (radioiodine, tritium and particulates) in the effluent for the appropriate time period. The radionuclide concentrations are then multiplied by the appropriate X/Q value, inhalation dose factor, air intake rate, and the fractional portion of the year in question. Thus, the inhalation pathway is evaluated using the following equation adapted from Regulatory Guide 1.109. Table D 3-24 presents the reference for the parameters used in the following equation.

NOTE: The following equation is adapted from equations C-3 and C-4 of Regulatory Guide 1.109. Since many of the factors are in units of pCi/m^3, m^3/sec., etc., and since the radionuclide decay expressions have been deleted because of the short distance to the receptor location, the equation presented here is not identical to the Regulatory Guide equations.

$$D_{ja} = \sum_i [(C_i) F (X/Q) (DFA)_{ija} (BR)_a t]$$

Where:

D_{ja} = The maximum dose from all nuclides to the organ j and age group (a) in mrem/yr; ex. if calculating to the adult lung, then $D_{ja} = D_L$ and $DFA_{ija} = DFA_{iL}$

C_i = The average concentration in the stack or vent release of nuclide i for the period in pCi/m^3.

F = Unit 2 average stack or vent flowrate in m^3/sec.

X/Q	=	The plume dispersion parameter for a location approximately 0.50 miles west of NMP-2 (The plume dispersion parameters are 9.6E-07 (stack) and 2.8E-06 (vent) and were obtained from the C.T. Main five year average annual X/Q tables. The vent X/Q (ground level) is ten times the listed 0.50 mile X/Q because the vent is approximately 0.3 miles from the receptor location. The stack (elevated) X/Q is conservative when based on 0.50 miles because of the close proximity of the stack and the receptor location.
$(DFA)_{ija}$	=	the dose factor for nuclide i, organ j, and age group a in mrem per pCi (Reg. Guide 1.109, Table E-7); ex. if calculating to the adult lung the $DFA_{ija} = DFA_{iL}$
$(BR)_a$	=	annual air intake for individuals in age group a in M^3 per year (obtained from Table E-5 of Regulatory Guide 1.109).
t	=	fractional portion of the year for which radionuclide i was detected and for which a dose is to be calculated (in years).

The ground dose pathway (deposition) will be evaluated by obtaining at least one soil or shoreline sediment sample in the area where fishing occurs. The dose will then be calculated using the sample results, the time period in question, and the methodology based on Regulatory Guide 1.109 as presented in Section 3.1. The resultant dose may be adjusted for a background dose by subtracting the applicable off-site control soil or shoreline sediment sample radionuclide activities. In the event it is noted that fishing is not performed from the shoreline but is instead performed in the water (i.e., the use of waders), then the ground dose pathway (deposition) will not be evaluated.

The direct radiation gamma dose pathway includes any gamma doses from an overhead plume, submersion in the plume, possible radiation from the facility and ground plane dose (deposition). This general pathway will be evaluated by average environmental TLD readings. At least two environmental TLDs will be used at one location in the approximate area where fishing occurs. The TLDs will be placed in the field on approximately the beginning of each calendar quarter and removed approximately at the end of each calendar quarter (quarter 2, 3, and 4).

The average TLD readings will be adjusted by the average control TLD readings. This is accomplished by subtracting the average quarterly control TLD value from the average fishing location TLD value. The applicable quarterly control TLD values will be used after adjusting for the appropriate time period (as applicable). In the event of loss or theft of the TLDs, results from a TLD or TLDs in a nearby area may be utilized.

4.0 ENVIRONMENTAL MONITORING PROGRAM

4.1 Sampling Stations

The current sampling locations are specified in Table D 5-1 and Figures D 5.1-1 and D 5.1-2. The meteorological tower location is shown on Figure D 5.1-1. The location is shown as TLD location #17. The Environmental Monitoring Program is a joint effort between the owners and operators of the Nine Mile Point Units 1 and 2 and the James A. FitzPatrick Nuclear Power Plants. Sampling locations are chosen on the basis of historical average dispersion or deposition parameters from both units. The environmental sampling location coordinates shown on Table D 5-1 are based on the NMP-2 reactor centerline.

The average dispersion and deposition parameters for the three units have been calculated for a 5 year period, 1978 through 1982. The calculated dispersion or deposition parameters will be compared to the results of the annual land use census. If it is determined that a milk sampling location exists at a location that yields a significantly higher (e.g. 50%) calculated D/Q rate, the new milk sampling location will be added to the monitoring program within 30 days. If a new location is added, the old location that yields the lowest calculated D/Q may be dropped from the program after October 31 of that year.

4.2 Interlaboratory Comparison Program

Analyses shall be performed on samples containing known quantities of radioactive materials that are supplied as part of a Commission approved or sponsored Interlaboratory Comparison Program, such as the EPA Crosscheck Program. Participation shall be only for those media, e.g., air, milk, water, etc., that are included in the Nine Mile Point Environmental Monitoring Program and for which cross check samples are available. An attempt will be made to obtain a QC sample to program sample ratio of 5% or better. The Quality Control sample results shall be reported in the Annual Radiological Environmental Operating Report so that the Commission staff may evaluate the results.

Specific sample media for which EPA Cross Check Program samples are available include the following:

- gross beta in air particulate filters
- gamma emitters in air particulate filters
- gamma emitters in milk
- gamma emitters in water
- tritium in water
- I-131 in water

4.3 Capabilities for Thermoluminescent Dosimeters Used for Environmental Measurements

Required detection capabilities for thermoluminescent dosimeters used for environmental measurements required by the Technical Specifications are based on ANSI Standard N545, section 4.3. TLDs are defined as phosphors packaged for field use. In regard to the detection capabilities for thermoluminescent dosimeters, only one determination is required to evaluate the above capabilities per type of TLD. Furthermore, the above capabilities may be determined by the vendor who supplies the TLDs. Required detection capabilities are as follows.

4.3.1 Uniformity shall be determined by giving TLDs from the same batch an exposure equal to that resulting from an exposure rate of 10 uR/hr during the field cycle. The responses obtained shall have a relative standard deviation of less than 7.5%. A total of at least 5 TLDs shall be evaluated.

4.3.2 Reproducibility shall be determined by giving TLDs repeated exposures equal to that resulting from an exposure rate of 10 uR/hr during the field cycle. The average of the relative standard deviations of the responses shall be less than 3.0%. A total of at least 4 TLDs shall be evaluated.

4.3.3 Dependence of exposure interpretation on the length of a field cycle shall be examined by placing TLDs for a period equal to at least a field cycle and a period equal to half the same field cycle in an area where the exposure rate is known to be constant. This test shall be conducted under approximate average winter temperatures and approximate average summer temperatures. For these tests, the ratio of the response obtained in the field cycle to twice that obtained for half the field cycle shall not be less than 0.85. At least 6 TLDs shall be evaluated.

4.3.4 Energy dependence shall be evaluated by the response of TLDs to photons for several energies between approximately 30 keV and 3 MeV. The response shall not differ from that obtained with the calibration source by more than 25% for photons with energies greater than 80 keV and shall not be enhanced by more than a factor of two for photons with energies less than 80 keV. A total of at least 8 TLDs shall be evaluated.

4.3.5 The directional dependence of the TLD response shall be determined by comparing the response of the TLD exposed in the routine orientation with respect to the calibration source with the response obtained for different orientations. To accomplish this, the TLD shall be rotated through at least two perpendicular planes. The response averaged over all directions shall not differ from the response obtained in the standard calibration position by more than 10%. A total of at least 4 TLDs shall be evaluated.

4.3.6 Light dependence shall be determined by placing TLDs in the field for a period equal to the field cycle under the four conditions found in ANSI N545, section 4.3.6. The results obtained for the unwrapped TLDs shall not differ from those obtained for the TLDs wrapped in aluminum foil by more than 10%. A total of at least 4 TLDs shall be evaluated for each of the four conditions.

4.3.7 Moisture dependence shall be determined by placing TLDs (that is, the phosphors packaged for field use) for a period equal to the field cycle in an area where the exposure rate is known to be constant. The TLDs shall be exposed under two conditions: (1) packaged in a thin, sealed plastic bag, and (2) packaged in a thin, sealed plastic bag with sufficient water to yield observable moisture throughout the field cycle. The TLD or phosphor, as appropriate, shall be dried before readout. The response of the TLD exposed in the plastic bag containing water shall not differ from that exposed in the regular plastic bag by more than 10%. A total of at least 4 TLDs shall be evaluated for each condition.

4.3.8 Self irradiation shall be determined by placing TLDs for a period equal to the field cycle in an area where the exposure rate is less than 10 uR/hr and the exposure during the field cycle is known. If necessary, corrections shall be applied for the dependence of exposure interpretation on the length of the field cycle (ANSI N545, section 4.3.3). The average exposure inferred from the responses of the TLDs shall not differ from the known exposure by more than an exposure equal to that resulting from an exposure rate of 10 uR/hr during the field cycle. A total of at least 3 TLDs shall be evaluated.

TABLE D 2-1

LIQUID EFFLUENT DETECTORS RESPONSES*

NUCLIDE	(CPM/μCi/ml X 10^8)
Sr 89	0.78E-04
Sr 91	1.22
Sr 92	0.817
Y 91	2.47
Y 92	0.205
Zr 95	0.835
Nb 95	0.85
Mo 99	0.232
Tc 99m	0.232
Te 132	1.12
Ba 140	0.499
Ce 144	0.103
Br 84	1.12
I 131	1.01
I 132	2.63
I 133	0.967
I 134	2.32
I 135	1.17
Cs 134	1.97
Cs 136	2.89
Cs 137	0.732
Cs 138	1.45
Mn 54	0.842
Mn 56	1.2
Fe 59	0.863
Co 58	1.14
Co 60	1.65

* Values from SWEC purchase specification NMP2-P281F.

TABLE D 2-2
A_{iat} VALUES - LIQUID[1]
ADULT
$\frac{\text{mrem - ml}}{\text{hr - uCi}}$

NUCLIDE	T BODY	GI-TRACT	BONE	LIVER	KIDNEY	THYROID	LUNG
H 3	3.67E-1	3.67E-1	--	3.67E-1	3.67E-1	3.67E-1	3.67E-1
Cr 51	1.26	3.13E2	1.18E-2	1.18E-2	2.86E-1	7.56E-1	1.66
Cu 64	1.28	2.33E2	--	2.73	6.89	--	--
Mn 54	8.38E2	1.34E4	3.98	4.38E3	1.31E3	3.98	3.98
Fe 55	1.07E2	2.62E2	6.62E2	4.57E2	--	--	2.55E2
Fe 59	9.28E2	8.06E3	1.03E3	2.42E3	7.53E-1	7.53E-1	6.76E2
Co 58	2.01E2	1.81E3	1.07	9.04E1	1.07	1.07	1.07
Co 60	6.36E2	4.93E3	6.47E1	3.24E2	6.47E1	6.47E1	6.47E1
Zn 65	3.32E4	4.63E4	2.31E4	7.35E4	4.92E4	2.21	2.21
Sr 89	6.38E2	3.57E3	2.22E4	6.18E-5	6.18E-5	6.18E-5	6.18E-5
Sr 90	1.36E5	1.60E4	5.55E5	--	--	--	--
Sr 92	1.44E-2	6.61	3.34E-1	--	--	--	--
Zr 95	7.59E-1	2.83E2	9.77E-1	7.88E-1	8.39E-1	6.99E-1	6.99E-1
Mn 56	3.07E-2	5.52	--	1.73E-1	2.20E-1	--	--
Mo 99	1.60E1	1.95E2	1.97E-3	8.42E1	1.91E2	1.97E-3	1.97E-3
Na 24	1.34E2	1.34E2	1.34E2	1.34E2	1.34E2	1.34E2	1.34E2
I 131	1.16E2	5.36E1	1.42E2	2.03E2	3.48E2	6.65E4	2.77E-2
I 132	4.34E-3	2.33E-3	4.64E-3	1.24E-2	1.98E-2	4.34E-1	--
I 133	1.22E1	3.59E1	2.30E1	3.99E1	6.97E1	5.87E3	--
Ni 65	1.14E-2	6.35E-1	1.93E-1	2.50E-2	--	--	--
Cs 134	5.79E5	1.24E4	2.98E5	7.08E5	2.29E5	2.04E1	7.61E4
Cs 136	8.42E4	1.33E4	2.96E4	1.17E5	6.51E4	3.28E-1	8.92E3
Cs 137	3.42E5	1.01E4	3.82E5	5.22E5	1.77E5	3.10E1	5.89E4
Ba 140	1.37E1	4.30E2	2.09E2	3.04E-1	1.31E-1	4.17E-2	1.92E-1
Ce 141	3.79E-2	8.81E1	6.93E-2	5.83E-2	4.60E-2	3.53E-2	3.53E-2
Nb 95	1.31E2	1.48E6	4.38E2	2.44E2	2.41E2	3.56E-1	3.56E-1
La 140	1.62E-2	3.72E3	1.03E-1	5.36E-2	2.83E-3	2.83E-3	2.83E-3
Ce 144	3.03E-1	6.15E2	2.02	9.66E-1	6.57E-1	2.06E-1	2.06E-1
Tc 99m	2.05E-2	9.54E-01	5.71E-4	1.61E-3	2.45E-2	--	7.90E-4
Np 239	1.8E-3	4.47E2	2.28E-2	2.78E-3	7.40E-3	5.95E-4	5.95E-4
Te 132	1.18E3	5.97E4	1.95E3	1.26E3	1.22E4	1.39E3	2.66E-3
Zr 97	5.08E-4	3.39E2	5.44E-3	1.10E-3	1.66E-3	7.11E-6	7.11E-6
W 187	4.31E1	4.04E4	1.48E2	1.23E2	4.43E-5	4.43E-5	4.43E-5
Ag 110m	1.09E1	3.94E2	1.14E1	1.13E1	1.22E1	1.04E1	1.04E1
Sb-124	7.35EO	2.11E2	1.17E1	4.62E0	4.48E0	4.50E0	1.01E1

[1] Calculated in accordance with NUREG 0133, Section 4.3.1; and Regulatory Guide 1.109, Regulatory position C, Section 1.

TABLE D 2-3
A_{iat} VALUES - LIQUID[1]
TEEN
mrem - ml / hr - uCi

NUCLIDE	T BODY	GI-TRACT	BONE	LIVER	KIDNEY	THYROID	LUNG
H 3	2.73E-1	2.73E-1	--	2.73E-1	2.73E-1	2.73E-1	2.73E-1
Cr 51	1.35	2.16E2	6.56E-2	6.56E-2	3.47E-1	7.79E-1	1.90
Cu 64	1.35	2.23E2	--	2.87	7.27	--	--
Mn 54	8.75E2	8.84E3	2.22E1	4.32E3	1.31E3	2.22E1	2.22E1
Fe 55	1.15E2	2.13E2	6.93E2	4.91E2	--	--	3.11E2
Fe 59	9.59E2	5.85E3	1.06E3	2.48E3	4.20	4.20	7.84E2
Co 58	2.10E2	1.23E3	5.98	9.47E1	5.98	5.98	5.98
Co 60	9.44E2	3.73E3	3.61E2	6.20E2	3.61E2	3.61E2	3.61E2
Zn 65	3.40E4	3.08E4	2.10E4	7.28E4	4.66E4	1.24E1	1.24E1
Sr 89	6.92E2	2.88E3	2.42E4	3.45E-4	3.45E-4	3.45E-4	
Sr 90	1.14E5	1.30E4	4.62E5	--	--	--	--
Sr 92	1.54E-2	9.19E1	3.61E-1	--	--	--	--
Zr 95	3.96	2.10E2	4.19	3.99	4.03	3.90	3.90
Mn 56	3.22E-2	1.19E1	--	1.81E-1	2.29E-1	--	--
Mo 99	1.71E1	1.60E2	1.10E-2	8.95E1	2.05E2	1.10E-2	1.10E-2
Na 24	1.38E2	1.38E2	1.38E2	1.38E2	1.38E2	1.38E2	1.38E2
I 131	1.14E2	4.21E1	1.52E2	2.12E2	3.66E2	6.19E4	1.55E-1
I 132	4.56E-3	5.54E-3	4.86E-3	1.27E-2	2.00E-2	4.29E-1	--
I 133	1.28E1	3.17E1	2.47E1	4.19E1	7.35E1	5.85E3	1.02E-4
Ni 65	1.21E-2	1.44	2.08E-1	2.66E-2	--	--	--
Cs 134	3.33E5	9.05E3	3.05E5	7.18E5	2.28E5	1.14E2	8.72E4
Cs 136	7.87E4	9.44E3	2.98E4	1.17E5	6.38E4	1.83	1.01E4
Cs 137	1.90E5	7.91E3	4.09E5	5.44E5	1.85E5	1.73E2	7.21E4
Ba 140	1.44E1	3.40E2	2.21E2	5.03E-1	3.25E-1	2.33E-1	4.15E-1
Ce 141	2.00E-1	6.85E1	2.33E-1	2.21E-1	2.08E-1	1.97E-1	1.97E-1
Nb 95	1.17E2	1.05E6	4.43E2	2.47E2	2.39E2	1.99	1.99
La 140	2.97E-2	3.01E3	1.22E-1	6.82E-2	1.58E-2	1.58E-2	1.58E-2
Ce 144	1.25	4.83E2	3.07	1.94	1.62	1.15	1.15
Tc 99m	2.11E-2	1.07	5.84E-4	1.63E-3	2.43E-2	--	9.04E-4
Np 239	4.63E-3	3.78E2	2.82E-2	5.67E-3	1.07E-2	3.32E-3	3.32E-3
Te 132	1.23E3	4.13E4	2.06E3	1.30E3	1.25E4	1.37E3	1.48E-2
Zr 97	5.68E-4	3.11E2	5.84E-3	1.19E-3	1.78E-3	3.97E-5	3.97E-5
W 187	4.55E1	3.52E4	1.59E2	1.30E2	2.47E-4	2.47E-4	2.47E-4
Ag 110m	5.85E1	3.17E2	5.89E1	5.88E1	5.97E1	5.79E1	5.79E1
Sb-124	2.79E1	1.77E2	3.26E1	2.51E1	2.50E1	2.50E1	3.16E1

[1]Calculated in accordance with NUREG 0133, Section 4.3.1; and Regulatory Guide 1.109, Regulatory position C, Section 1.

TABLE D 2-4
A_{iat} VALUES - LIQUID[1]
CHILD
$\frac{\text{mrem - ml}}{\text{hr - uCi}}$

NUCLIDE	T BODY	GI-TRACT	BONE	LIVER	KIDNEY	THYROID	LUNG
H 3	3.34E-1	3.34E-1	--	3.34E-1	3.34E-1	3.34E-1	3.34E-1
Cr 51	1.39	7.29E1	1.37E-2	1.37E-2	2.22E-1	7.76E-1	1.41
Cu 64	1.60	1.25E2	--	2.65	6.41	--	--
Mn 54	9.02E2	2.83E3	4.65	3.37E3	9.49E2	4.65	4.65
Fe 55	1.50E2	8.99E1	9.15E2	4.85E2	--	--	2.74E2
Fe 59	1.04E3	2.18E3	1.29E3	2.09E3	8.78E-1	8.78E-1	6.08E2
Co 58	2.21E2	4.20E2	1.25	7.30E1	1.25	1.25	1.25
Co 60	7.03E2	1.25E3	7.55E1	2.88E2	7.55E1	7.55E1	7.55E1
Zn 65	3.56E4	1.01E4	2.15E4	5.73E4	3.61E4	2.58	2.58
Sr 89	9.13E2	1.24E3	3.20E4	--	--	--	--
Sr 90	1.06E5	5.62E3	4.17E5	--	--	--	--
Sr 92	1.85E-2	8.73	4.61E-1	--	--	--	--
Zr 95	8.95E-1	9.36E1	1.22	9.04E-1	9.43E-1	8.15E-1	8.15E-1
Mn 56	3.73E-2	2.39E1	--	1.65E-1	2.00E-1	--	--
Mo 99	2.22E1	7.42E1	2.30E-3	8.98E1	1.92E2	2.30E-3	2.30E-3
Na 24	1.51E2	1.51E2	1.51E2	1.51E2	1.51E2	1.51E2	1.51E2
I 131	1.14E2	1.80E1	2.00E2	2.01E2	3.31E2	6.66E4	3.23E-2
I 132	5.08E-3	1.30E-2	6.01E-3	1.10E-2	1.69E-2	5.13E-1	--
I 133	1.51E1	1.60E1	3.22E+1	3.98E1	6.64E1	7.40E3	--
Ni 65	1.46E-2	3.07	2.66E-1	2.51E-2	--	--	--
Cs 134	1.27E5	3.28E3	3.68E5	6.04E5	1.87E5	2.38E1	6.72E4
Cs 136	6.26E4	3.40E3	3.52E4	9.67E4	5.15E4	3.82E-1	7.68E3
Cs 137	7.28E4	3.12E3	5.15E5	4.93E5	1.61E5	3.62E1	5.78E4
Ba 140	1.87E1	1.62E2	3.19E2	3.28E-1	1.40E-1	4.87E-2	2.15E-1
Ce 141	4.61E-2	4.14E1	1.08E-1	7.43E-2	5.57E-2	4.12E-2	4.12E-2
Nb 95	1.45E2	3.75E5	5.21E2	2.03E2	1.91E2	4.16E-1	4.16E-1
La 140	1.93E-2	1.33E3	1.39E-1	5.09E-2	3.30E-3	3.30E-3	3.30E-3
Ce 144	4.31E-1	2.92E2	3.81	1.36	8.61E-1	2.40E-1	2.40E-1
Tc 99m	2.29E-2	7.87E-1	7.05E-4	1.38E-3	2.01E-2	--	7.02E-4
Np 239	2.40E-3	1.79E2	3.44E-2	3.12E-3	7.70E-3	6.94E-4	6.94E-4
Te 132	1.38E3	1.15E4	2.57E3	1.14E3	1.06E4	1.66E3	3.10E-3
Zr 97	6.99E-4	1.77E2	8.11E-3	1.18E-3	1.69E-3	8.29E-6	8.29E-6
W 187	5.37E1	1.68E4	2.02E2	1.20E2	5.16E-5	5.16E-5	5.16E-5
Ag 110m	1.29E1	1.24E2	1.35E1	1.30E1	1.39E1	1.21E1	1.21E1
Sb-124	8.86E0	7.01E1	1.56E1	5.36E0	5.22E0	5.24E0	1.10E1

[1]Calculated in accordance with NUREG 0133, Section 4.3.1; and Regulatory Guide 1.109, Regulatory position C, Section 1.

TABLE D 2-5
A_{iat} VALUES - LIQUID[1]
INFANT
$\frac{\text{mrem - ml}}{\text{hr - uCi}}$

NUCLIDE	T BODY	GI-TRACT	BONE	LIVER	KIDNEY	THYROID	LUNG
H 3	1.87E-1	1.87E-1	--	1.87E-1	1.87E-1	1.87E-1	1.87E-1
Cr 51	8.21E-3	2.39E-1	--	--	1.17E-3	5.36E-3	1.04E-2
Cu 64	1.96E-2	8.70E-1	--	4.24E-2	7.17E-2	--	--
Mn 54	2.73	4.42	--	1.20E1	2.67	--	--
Fe 55	1.45	6.91E-1	8.42	5.44	--	--	2.66
Fe 59	1.25E1	1.52E1	1.82E1	3.18E1	--	--	9.41
Co 58	5.36	5.36	--	2.15	--	--	--
Co 60	1.55E1	1.56E1	--	6.55	--	--	--
Zn 65	1.76E1	3.22E1	1.11E1	3.81E1	1.85E1	--	--
Sr 89	4.27E1	3.06E1	1.49E3	--	--	--	--
Sr 90	2.86E3	1.40E2	1.12E4	--	--	--	--
Sr 92	1.56E-5	4.54E-3	4.21E-4	--	--	--	--
Zr 95	2.12E-2	1.49E1	1.23E-1	2.99E-2	3.23E-2	--	--
Mn 56	1.81E-6	9.56E-4	--	1.05E-5	9.05E-6	--	--
Mo 99	2.65	4.48	--	1.36E1	2.03E1	--	--
Na 24	9.61E-1	9.61E-1	9.61E-1	9.61E-1	9.61E-1	9.61E-1	9.61E-1
I 131	9.78	7.94E-1	1.89E1	2.22E1	2.60E1	7.31E3	--
I 132	3.43E-6	7.80E-6	4.75E-6	9.63E-6	1.07E-5	4.52E-4	--
I 133	8.26E-1	4.77E-1	1.94	2.82	3.31	5.13E2	--
Ni 65	2.96E-6	4.96E-4	5.75E-5	6.51E-6	--	--	--
Cs 134	4.30E1	1.16	2.28E2	4.26E2	1.10E2	--	4.50E1
Cs 136	2.81E1	1.14	2.56E1	7.53E1	3.00E1	--	6.13
Cs 137	2.63E1	1.16	3.17E2	3.71E2	9.95E1	--	4.03E1
Ba 140	4.88	2.33E1	9.48E1	9.48E-2	2.25E-2	--	5.82E-2
Ce 141	3.31E-3	1.45E1	4.61E-2	2.81E-2	8.67E-3	--	--
Nb 95	5.87E-3	8.57	2.47E-2	1.02E-2	7.28E-3	--	--
La 140	6.52E-4	2.98E1	6.43E-3	2.53E-3	--	--	--
Ce 144	1.01E-1	1.03E2	1.80	7.37E-1	2.98E-1	--	--
Tc 99m	3.17E-4	7.14E-3	1.19E-5	2.46E-5	2.64E-4	--	1.28E-5
Np 239	2.08E-4	1.06E1	4.12E-3	3.68E-4	7.34E-4	--	--
Te 132	4.08	1.62E1	8.83	4.37	2.74E1	6.46	--
Zr 97	1.38E-4	1.92E1	1.76E-3	3.02E-4	3.04E-4	--	--
W 187	4.13E-2	7.02	1.72E-1	1.19E-1	--	--	--
Ag 110m	2.91E-1	2.28E1	6.02E-1	4.39E-1	6.28E-1	--	--
Sb-124	6.78E-1	6.75E0	2.19E0	3.23E-2	--	5.80E-3	1.37E0

[1]Calculated in accordance with NUREG 0133, Section 4.3.1; and Regulatory Guide 1.109, Regulatory position C, Section 1.

TABLE D 3-1
OFFGAS PRETREATMENT*
DETECTOR RESPONSE

NUCLIDE	NET CPM/$_{\mu}$Ci/cc
Kr 83m	--
Kr 85	4.28E+03
Kr 85m	3.85E+03
Kr 87	6.68E+03
Kr 88	3.97E+03
Kr 89	6.48E+03
Xe 131m	--
Xe 133	1.69E+03
Xe 133m	--
Xe 135	4.91E+03
Xe 135m	--
Xe 137	6.89E+03
Xe 138	5.51E+03

* Values from calculation H21C-070

TABLE D 3-2
PLUME SHINE PARAMETERS[1]

NUCLIDE	B_i mrad/yr / uCi/sec	V_i mrem/yr / uCi/sec
Kr 83m	9.01E-7	-------
Kr 85	6.92E-7	-------
Kr 85m	5.09E-4	4.91E-4
Kr 87	2.72E-3	2.57E-3
Kr 88	7.23E-3	7.04E-3
Kr 89	1.15E-2	1.13E-2
Kr 90	6.57E-3	4.49E-3
Xe 131m	7.76E-6	-------
Xe 133	7.46E-5	6.42E-5
Xe 133m	4.79E-5	3.95E-5
Xe 135	7.82E-4	7.44E-4
Xe 135m	1.45E-3	1.37E-3
Xe 137	6.25E-4	5.98E-4
Xe 138	4.46E-3	4.26E-3
Xe-127	1.96E-3	1.31E-3
Ar 41	5.00E-3	4.79E-3

[1] B_i and V_i are calculated for critical site boundary location; 1.6km in the easterly direction. See Appendix B. Those values that show a dotted line were negligible because of high energy absorption coefficients.

TABLE D 3-3
IMMERSION DOSE FACTORS[1]

Nuclide	K_i(γ-Body)[2]	L_i(β-Skin)[2]	M_i(γ-Air)[3]	N_i(β-Air)[3]
Kr 83m	7.56E-02	---	1.93E1	2.88E2
Kr 85m	1.17E3	1.46E3	1.23E3	1.97E3
Kr 85	1.61E1	1.34E3	1.72E1	1.95E3
Kr 87	5.92E3	9.73E3	6.17E3	1.03E4
Kr 88	1.47E4	2.37E3	1.52E4	2.93E3
Kr 89	1.66E4	1.01E4	1.73E4	1.06E4
Kr 90	1.56E4	7.29E3	1.63E4	7.83E3
Xe 131m	9.15E1	4.76E2	1.56E2	1.11E3
Xe 133m	2.51E2	9.94E2	3.27E2	1.48E3
Xe 133	2.94E2	3.06E2	3.53E2	1.05E3
Xe 135m	3.12E3	7.11E2	3.36E3	7.39E2
Xe 135	1.81E3	1.86E3	1.92E3	2.46E3
Xe 137	1.42E3	1.22E4	1.51E3	1.27E4
Xe 138	8.83E3	4.13E3	9.21E3	4.75E3
Ar 41	8.84E3	2.69E3	9.30E3	3.28E3

[1]From, Table B-1.Regulatory Guide 1.109 Rev. 1
[2]mrem/yr per uCi/m^3.
[3]mrad/yr per uCi/m^3.

TABLE D 3-4
DOSE AND DOSE RATE
R_i VALUES - INHALATION - INFANT[1]
$\frac{mrem/yr}{uCi/m^3}$

NUCLIDE	BONE	LIVER	T. BODY	THYROID	KIDNEY	LUNG	GI-LLI
H 3*	--	6.47E2	6.47E2	6.47E2	6.47E2	6.47E2	6.47E2
C 14*	2.65E4	5.31E3	5.31E3	5.31E3	5.31E3	5.31E3	5.31E3
Cr 51	--	--	8.95E1	5.75E1	1.32E1	1.28E4	3.57E2
Mn 54	--	2.53E4	4.98E3	--	4.98E3	1.00E6	7.06E3
Fe 55	1.97E4	1.17E4	3.33E3	--	--	8.69E4	1.09E3
Fe 59	1.36E4	2.35E4	9.48E3	--	--	1.02E6	2.48E4
Co 58	--	1.22E3	1.82E3	--	--	7.77E5	1.11E4
Co 60	--	8.02E3	1.18E4	--	--	4.51E6	3.19E4
Zn 65	1.93E4	6.26E4	3.11E4	--	3.25E4	6.47E5	5.14E4
Sr 89	3.98E5	--	1.14E4	--	--	2.03E6	6.40E4
Sr 90	4.09E7	--	2.59E6	--	--	1.12E7	1.31E5
Zr 95	1.15E5	2.79E4	2.03E4	--	3.11E4	1.75E6	2.17E4
Nb 95	1.57E4	6.43E3	3.78E3	--	4.72E3	4.79E5	1.27E4
Mo 99	--	1.65E2	3.23E1	--	2.65E2	1.35E5	4.87E4
I-131	3.79E4	4.44E4	1.96E4	1.48E7	5.18E4	--	1.06E3
I 133	1.32E4	1.92E4	5.60E3	3.56E6	2.24E4	--	2.16E3
Cs 134	3.96E5	7.03E5	7.45E4	--	1.90E5	7.97E4	1.33E3
Cs 137	5.49E5	6.12E5	4.55E4	--	1.72E5	7.13E4	1.33E3
Ba 140	5.60E4	5.60E1	2.90E3	--	1.34E1	1.60E6	3.84E4
La 140	5.05E2	2.00E2	5.15E1	--	--	1.68E5	8.48E4
Ce 141	2.77E4	1.67E4	1.99E3	--	5.25E3	5.17E5	2.16E4
Ce 144	3.19E6	1.21E6	1.76E5	--	5.38E5	9.84E6	1.48E5
Nd 147	7.94E3	8.13E3	5.00E2	--	3.15E3	3.22E5	3.12E4
Ag 110m	9.99E3	7.22E3	5.00E3	--	1.09E4	3.67E6	3.30E4

* mrem/yr per $\mu Ci/m^3$

[1]This and following R_i Tables Calculated in accordance with NUREG 0133, Section 5.3.1, except C 14 values in accordance with Regulatory Guide 1.109 Equation C-8.

TABLE D 3-5
DOSE AND DOSE RATE
R_i VALUES - INHALATION - CHILD
$\frac{mrem/yr}{uCi/m^3}$

NUCLIDE	BONE	LIVER	T. BODY	THYROID	KIDNEY	LUNG	GI-LLI
H 3*	--	1.12E3	1.12E3	1.12E3	1.12E3	1.12E3	1.12E3
C 14*	3.59E4	6.73E3	6.73E3	6.73E3	6.73E3	6.73E3	6.73E3
Cr 51	--	--	1.54E2	8.55E1	2.43E1	1.70E4	1.08E3
Mn 54	--	4.29E4	9.51E3	--	1.00E4	1.58E6	2.29E4
Fe 55	4.74E4	2.52E4	7.77E3	--	--	1.11E5	2.87E3
Fe 59	2.07E4	3.34E4	1.67E4	--	--	1.27E6	7.07E4
Co 58	--	1.77E3	3.16E3	--	--	1.11E6	3.44E4
Co 60	--	1.31E4	2.26E4	--	--	7.07E6	9.62E4
Zn 65	4.26E4	1.13E5	7.03E4	--	7.14E4	9.95E5	1.63E4
Sr 89	5.99E5	--	1.72E4	--	--	2.16E6	1.67E5
Sr 90	1.01E8	--	6.44E6	--	--	1.48E7	3.43E5
Zr 95	1.90E5	4.18E4	3.70E4	--	5.96E4	2.23E6	6.11E4
Nb 95	2.35E4	9.18E3	6.55E3	--	8.62E3	6.14E5	3.70E4
Mo 99	--	1.72E2	4.26E1	--	3.92E2	1.35E5	1.27E5
I 131	4.81E4	4.81E4	2.73E4	1.62E7	7.88E4	--	2.84E3
I 133	1.66E4	2.03E4	7.70E3	3.85E6	3.38E4	--	5.48E3
Cs 134	6.51E5	1.01E6	2.25E5	--	3.30E5	1.21E5	3.85E3
Cs 137	9.07E5	8.25E5	1.28E5	--	2.82E5	1.04E5	3.62E3
Ba 140	7.40E4	6.48E1	4.33E3	--	2.11E1	1.74E6	1.02E5
La 140	6.44E2	2.25E2	7.55E1	--	--	1.83E5	2.26E5
Ce 141	3.92E4	1.95E4	2.90E3	--	8.55E3	5.44E5	5.66E4
Ce 144	6.77E6	2.12E6	3.61E5	--	1.17E6	1.20E7	3.89E5
Nd 147	1.08E4	8.73E3	6.81E2	--	4.81E3	3.28E5	8.21E4
Ag 110m	1.69E4	1.14E4	9.14E3	--	2.12E4	5.48E6	1.00E5

* mrem/yr per $\mu Ci/m^3$

TABLE D 3-6
DOSE AND DOSE RATE
R_i VALUES - INHALATION - TEEN

$$\frac{\text{mrem/yr}}{\text{uCi/m}^3}$$

NUCLIDE	BONE	LIVER	T. BODY	THYROID	KIDNEY	LUNG	GI-LLI
H 3*	--	1.27E3	1.27E3	1.27E3	1.27E3	1.27E3	1.27E3
C 14*	2.60E4	4.87E3	4.87E3	4.87E3	4.87E3	4.87E3	4.87E3
Cr 51	--	--	1.35E2	7.50E1	3.07E1	2.10E4	3.00E3
Mn 54	--	5.11E4	8.40E3	--	1.27E4	1.98E6	6.68E4
Fe 55	3.34E4	2.38E4	5.54E3	--	--	1.24E5	6.39E3
Fe 59	1.59E4	3.70E4	1.43E4	--	--	1.53E6	1.78E5
Co 58	--	2.07E3	2.78E3	--	--	1.34E6	9.52E4
Co 60	--	1.51E4	1.98E4	--	--	8.72E6	2.59E5
Zn 65	3.86E4	1.34E5	6.24E4	--	8.64E4	1.24E6	4.66E4
Sr 89	4.34E5	--	1.25E4	--	--	2.42E6	3.71E5
Sr 90	1.08E8	--	6.68E6	--	--	1.65E7	7.65E5
Zr 95	1.46E5	4.58E4	3.15E4	--	6.74E4	2.69E6	1.49E5
Nb 95	1.86E4	1.03E4	5.66E3	--	1.00E4	7.51E5	9.68E4
Mo 99	--	1.69E2	3.22E1	--	4.11E2	1.54E5	2.69E5
I 131	3.54E4	4.91E4	2.64E4	1.46E7	8.40E4	--	6.49E3
I 133	1.22E4	2.05E4	6.22E3	2.92E6	3.59E4	--	1.03E4
Cs 134	5.02E5	1.13E6	5.49E5	--	3.75E5	1.46E5	9.76E3
Cs 137	6.70E5	8.48E5	3.11E5	--	3.04E5	1.21E5	8.48E3
Ba 140	5.47E4	6.70E1	3.52E3	--	2.28E1	2.03E6	2.29E5
La 140	4.79E2	2.36E2	6.26E1	--	--	2.14E5	4.87E5
Ce 141	2.84E4	1.90E4	2.17E3	--	8.88E3	6.14E5	1.26E5
Ce 144	4.89E6	2.02E6	2.62E5	--	1.21E6	1.34E7	8.64E5
Nd 147	7.86E3	8.56E3	5.13E2		5.02E3	3.72E5	1.82E5
Ag 110m	1.38E4	1.31E4	7.99E3	--	2.50E4	6.75E6	2.73E5

* mrem/yr per μCi/m^3

TABLE D 3-7
DOSE AND DOSE RATE
R_i VALUES - INHALATION - ADULT
$\frac{mrem/yr}{uCi/m^3}$

NUCLIDE	BONE	LIVER	T. BODY	THYROID	KIDNEY	LUNG	GI-LLI
H 3*	--	1.26E3	1.26E3	1.26E3	1.26E3	1.26E3	1.26E3
C 14*	1.82E4	3.41E3	3.41E3	3.41E3	3.41E3	3.41E3	3.41E3
Cr 51	--	--	1.00E2	5.95E1	2.28E1	1.44E4	3.32E3
Mn 54	--	3.96E4	6.30E3	--	9.84E3	1.40E6	7.74E4
Fe 55	2.46E4	1.70E4	3.94E3	--	--	7.21E4	6.03E3
Fe 59	1.18E4	2.78E4	1.06E4	--	--	1.02E6	1.88E5
Co 58	--	1.58E3	2.07E3	--	--	9.28E5	1.06E5
Co 60	--	1.15E4	1.48E4	--	--	5.97E6	2.85E5
Zn 65	3.24E4	1.03E5	4.66E4	--	6.90E4	8.64E5	5.34E4
Sr 89	3.04E5	--	8.72E3	--	--	1.40E6	3.50E5
Sr 90	9.92E7	--	6.10E6	--	--	9.60E6	7.22E5
Zr 95	1.07E5	3.44E4	2.33E4	--	5.42E4	1.77E6	1.50E5
Nb 95	1.41E4	7.82E3	4.21E3	--	7.74E3	5.05E5	1.04E5
Mo 99	--	1.21E2	2.30E1	--	2.91E2	9.12E4	2.48E5
I 131	2.52E4	3.58E4	2.05E4	1.19E7	6.13E4	--	6.28E3
I 133	8.64E3	1.48E4	4.52E3	2.15E6	2.58E4	--	8.88E3
Cs 134	3.73E5	8.48E5	7.28E5	--	2.87E5	9.76E4	1.04E4
Cs 137	4.78E5	6.21E5	4.28E5	--	2.22E5	7.52E4	8.40E3
Ba 140	3.90E4	4.90E1	2.57E3	--	1.67E1	1.27E6	2.18E5
La 140	3.44E2	1.74E2	4.58E1	--	--	1.36E5	4.58E5
Ce 141	1.99E4	1.35E4	1.53E3	--	6.26E3	3.62E5	1.20E5
Ce 144	3.43E6	1.43E6	1.84E5	--	8.48E5	7.78E6	8.16E5
Nd 147	5.27E3	6.10E3	3.65E2	--	3.56E3	2.21E5	1.73E5
Ag 110m	1.08E4	1.00E4	5.94E3	--	1.97E4	4.63E6	3.02E5

* mrem/yr per $\mu Ci/m^3$

TABLE D 3-8
DOSE AND DOSE RATE
R_i VALUES - GROUND PLANE
ALL AGE GROUPS
m^2-mrem/yr
uCi/sec

NUCLIDE	TOTAL BODY	SKIN
H 3	--	--
C 14	--	--
Cr 51	4.65E6	5.50E6
Mn 54	1.40E9	1.64E9
Fe 55	--	--
Fe 59	2.73E8	3.20E8
Co 58	3.80E8	4.45E8
Co 60	2.15E10	2.53E10
Zn 65	7.46E8	8.57E8
Sr 89	2.16E4	2.51E4
Sr 90	--	--
Zr 95	2.45E8	2.85E8
Nb 95	1.36E8	1.61E8
Mo 99	3.99E6	4.63E6
I 131	1.72E7	2.09E7
I 133	2.39E6	2.91E6
Cs 134	6.83E9	7.97E9
Cs 137	1.03E10	1.20E10
Ba 140	2.05E7	2.35E7
La 140	1.92E7	2.18E7
Ce 141	1.37E7	1.54E7
Ce 144	6.96E7	8.07E7
Nd 147	8.46E6	1.01E7
Ag 110m	3.44E9	4.01E9

TABLE D 3-9
DOSE AND DOSE RATE
R_i VALUES - COW MILK - INFANT
$\frac{m^2\text{-mrem/yr}}{uCi/sec}$

NUCLIDE	BONE	LIVER	T. BODY	THYROID	KIDNEY	LUNG	GI-LLI
H 3*	--	2.38E3	2.38E3	2.38E3	2.38E3	2.38E3	2.38E3
C 14*	3.23E6	6.89E5	6.89E5	6.89E5	6.89E5	6.89E5	6.89E5
Cr 51	--	--	8.35E4	5.45E4	1.19E4	1.06E5	2.43E6
Mn 54	--	2.51E7	5.68E6	--	5.56E6	--	9.21E6
Fe 55	8.43E7	5.44E7	1.45E7	--	--	2.66E7	6.91E6
Fe 59	1.22E8	2.13E8	8.38E7	--	--	6.29E7	1.02E8
Co 58	--	1.39E7	3.46E7	--	--	--	3.46E7
Co 60	--	5.90E7	1.39E8	--	--	--	1.40E8
Zn 65	3.53E9	1.21E10	5.58E9	--	5.87E9	--	1.02E10
Sr 89	6.93E9	--	1.99E8	--	--	--	1.42E8
Sr 90	8.19E10	--	2.09E10	--	--	--	1.02E9
Zr 95	3.85E3	9.39E2	6.66E2	--	1.01E3	--	4.68E5
Nb 95	4.21E5	1.64E5	1.17E5	--	1.54E5	--	3.03E8
Mo 99	--	1.04E8	2.03E7	--	1.55E8	--	3.43E7
I 131	6.81E8	8.02E8	3.53E8	2.64E11	9.37E8	--	2.86E7
I 133	8.52E6	1.24E7	3.63E6	2.26E9	1.46E7	--	2.10E6
Cs 134	2.41E10	4.49E10	4.54E9	--	1.16E10	4.74E9	1.22E8
Cs 137	3.47E10	4.06E10	2.88E9	--	1.09E10	4.41E9	1.27E8
Ba 140	1.21E8	1.21E5	6.22E6	--	2.87E4	7.42E4	2.97E7
La 140	2.03E1	7.99	2.06	--	--	--	9.39E4
Ce 141	2.28E4	1.39E4	1.64E3	--	4.28E3	--	7.18E6
Ce 144	1.49E6	6.10E5	8.34E4	--	2.46E5	--	8.54E7
Nd 147	4.43E2	4.55E2	2.79E1	--	1.76E2	--	2.89E5
Ag 110m	2.46E8	1.79E8	1.19E8	--	2.56E8	--	9.29E9

*mrem/yr per $\mu Ci/m^3$.

TABLE D 3-10
DOSE AND DOSE RATE
R_i VALUES - COW MILK - CHILD
$\frac{m^2\text{-mrem/yr}}{uCi/sec}$

NUCLIDE	BONE	LIVER	T. BODY	THYROID	KIDNEY	LUNG	GI-LLI
H 3*	--	1.57E3	1.57E3	1.57E3	1.57E3	1.57E3	1.57E3
C 14*	1.65E6	3.29E5	3.29E5	3.29E5	3.29E5	3.29E5	3.29E5
Cr 51	--	--	5.27E4	2.93E4	7.99E3	5.34E4	2.80E6
Mn 54	--	1.35E7	3.59E6	--	3.78E6	--	1.13E7
Fe 55	6.97E7	3.07E7	1.15E7	--	--	2.09E7	6.85E6
Fe 59	6.52E7	1.06E8	5.26E7	--	--	3.06E7	1.10E8
Co 58	--	6.94E6	2.13E7	--	--	--	4.05E7
Co 60	--	2.89E7	8.52E7	--	--	--	1.60E8
Zn 65	2.63E9	7.00E9	4.35E9	--	4.41E9	--	1.23E9
Sr 89	3.64E9	--	1.04E8	--	--	--	1.41E8
Sr 90	7.53E10	--	1.91E10	--	--	--	1.01E9
Zr 95	2.17E3	4.77E2	4.25E2	--	6.83E2	--	4.98E5
Nb 95	1.86E5	1.03E4	5.69E4	--	1.00E5	--	4.42E8
Mo 99	--	4.07E7	1.01E7	--	8.69E7	--	3.37E7
I 131	3.26E8	3.28E8	1.86E8	1.08E11	5.39E8	--	2.92E7
I 133	4.04E6	4.99E6	1.89E6	9.27E8	8.32E6	--	2.01E6
Cs 134	1.50E10	2.45E10	5.18E9	--	7.61E9	2.73E9	1.32E8
Cs 137	2.17E10	2.08E10	3.07E9	--	6.78E9	2.44E9	1.30E8
Ba 140	5.87E7	5.14E4	3.43E6	--	1.67E4	3.07E4	2.97E7
La 140	9.70	3.39	1.14	--	--	--	9.45E4
Ce 141	1.15E4	5.73E3	8.51E2	--	2.51E3	--	7.15E6
Ce 144	1.04E6	3.26E5	5.55E4	--	1.80E5	--	8.49E7
Nd 147	2.24E2	1.81E2	1.40E1	--	9.94E1	--	2.87E5
Ag 110m	1.33E8	8.97E7	7.17E7	--	1.67E8	--	1.07E10

*mrem/yr per $\mu Ci/m^3$.

TABLE D 3-11
DOSE AND DOSE RATE
R_i VALUES - COW MILK - TEEN
$\frac{m^2\text{-mrem/yr}}{uCi/sec}$

NUCLIDE	BONE	LIVER	T. BODY	THYROID	KIDNEY	LUNG	GI-LLI
H 3*	--	9.94E2	9.94E2	9.94E2	9.94E2	9.94E2	9.94E2
C 14*	6.70E5	1.34E5	1.34E5	1.34E5	1.34E5	1.35E5	1.34E5
Cr 51	--	--	2.58E4	1.44E4	5.66E3	3.69E4	4.34E6
Mn 54	--	9.01E6	1.79E6	--	2.69E6	--	1.85E7
Fe 55	2.78E7	1.97E7	4.59E6	--	--	1.25E7	8.52E6
Fe 59	2.81E7	6.57E7	2.54E7	--	--	2.07E7	1.55E8
Co 58	--	4.55E6	1.05E7	--	--	--	6.27E7
Co 60	--	1.86E7	4.19E7	--	--	--	2.42E8
Zn 65	1.34E9	4.65E9	2.17E9	--	2.97E9	--	1.97E9
Sr 89	1.47E9	--	4.21E7	--	--	--	1.75E8
Sr 90	4.45E10	--	1.10E10	--	--	--	1.25E9
Zr 95	9.34E2	2.95E2	2.03E2	--	4.33E2	--	6.80E5
Nb 95	1.86E5	1.03E5	5.69E4	--	1.00E5	--	4.42E8
Mo 99	--	2.24E7	4.27E6	--	5.12E7	--	4.01E7
I 131	1.34E8	1.88E8	1.01E8	5.49E10	3.24E8	--	3.72E7
I 133	1.66E6	2.82E6	8.59E5	3.93E8	4.94E6	--	2.13E6
Cs 134	6.49E9	1.53E10	7.08E9	--	4.85E9	1.85E9	1.90E8
Cs 137	9.02E9	1.20E10	4.18E9	--	4.08E9	1.59E9	1.71E8
Ba 140	2.43E7	2.98E4	1.57E6	--	1.01E4	2.00E4	3.75E7
La 140	4.05	1.99	5.30E-1	--	--	--	1.14E5
Ce 141	4.67E3	3.12E3	3.58E2	--	1.47E3	--	8.91E6
Ce 144	4.22E5	1.74E5	2.27E4	--	1.04E5	--	1.06E8
Nd 147	9.12E1	9.91E1	5.94E0	--	5.82E1	--	3.58E5
Ag 110m	6.13E7	5.80E7	3.53E7	--	1.11E8	--	1.63E10

*mrem/yr per $\mu Ci/m^3$.

TABLE D 3-12
DOSE AND DOSE RATE
R_i VALUES - COW MILK - ADULT
$\frac{m^2\text{-mrem/yr}}{uCi/sec}$

NUCLIDE	BONE	LIVER	T. BODY	THYROID	KIDNEY	LUNG	GI-LLI
H 3*	--	7.63E2	7.63E2	7.63E2	7.63E2	7.63E2	7.63E2
*C 14	3.63E5	7.26E4	7.26E4	7.26E4	7.26E4	7.26E4	7.26E4
Cr 51	--	--	1.48E4	8.85E3	3.26E3	1.96E4	3.72E6
Mn 54	--	5.41E6	1.03E6	--	1.61E6	--	1.66E7
Fe 55	1.57E7	1.08E7	2.52E6	--	--	6.04E6	6.21E6
Fe 59	1.61E7	3.79E7	1.45E7	--	--	1.06E7	1.26E8
Co 58	--	2.70E6	6.05E6	--	--	--	5.47E7
Co 60	--	1.10E7	2.42E7	--	--	--	2.06E8
Zn 65	8.71E8	2.77E9	1.25E9	--	1.85E9	--	1.75E9
Sr 89	7.99E8	--	2.29E7	--	--	--	1.28E8
Sr 90	3.15E10	--	7.74E9	--	--	--	9.11E8
Zr 95	5.34E2	1.71E2	1.16E2	--	2.69E2	--	5.43E5
Nb 95	1.09E5	6.07E4	3.27E4	--	6.00E4	--	3.69E8
Mo 99	--	1.24E7	2.36E6	--	2.81E7	--	2.87E7
I 131	7.41E7	1.06E8	6.08E7	3.47E10	1.82E8	--	2.80E7
I 133	9.09E5	1.58E6	4.82E5	2.32E8	2.76E6	--	1.42E6
Cs 134	3.74E9	8.89E9	7.27E9	--	2.88E9	9.55E8	1.56E8
Cs 137	4.97E9	6.80E9	4.46E9	--	2.31E9	7.68E8	1.32E8
Ba 140	1.35E7	1.69E4	8.83E5	--	5.75E3	9.69E3	2.77E7
La 140	2.26	1.14	3.01E-1	--	--	--	8.35E4
Ce 141	2.54E3	1.72E3	1.95E2	--	7.99E2	--	6.58E6
Ce 144	2.29E5	9.58E4	1.23E4	--	5.68E4	--	7.74E7
Nd 147	4.74E1	5.48E1	3.28E0	--	3.20E1	--	2.63E5
Ag 110m	3.71E7	3.43E7	2.04E7	--	6.74E7	--	1.40E10

*mrem/yr per $\mu Ci/m^3$.

TABLE D 3-13
DOSE AND DOSE RATE
R_i VALUES - GOAT MILK - INFANT
$\frac{m^2\text{-mrem/yr}}{uCi/sec}$

NUCLIDE	BONE	LIVER	T. BODY	THYROID	KIDNEY	LUNG	GI-LLI
H 3*	--	6.33E3	6.33E3	6.33E3	6.33E3	6.33E3	6.33E3
C 14*	3.23E6	6.89E5	6.89E5	6.89E5	6.89E5	6.89E5	6.89E5
Cr 51	--	--	1.00E4	6.56E3	1.43E3	1.28E4	2.93E5
Mn 54	--	3.01E6	6.82E5	--	6.67E5	--	1.11E6
Fe 55	1.10E6	7.08E5	1.89E5	--	--	3.46E5	8.98E4
Fe 59	1.59E6	2.78E6	1.09E6	--	--	8.21E5	1.33E6
Co 58	--	1.67E6	4.16E6	--	--	--	4.16E6
Co 60	--	7.08E6	1.67E7	--	--	--	1.68E7
Zn 65	4.24E8	1.45E9	6.70E8	--	7.04E8	--	1.23E9
Sr 89	1.48E10	--	4.24E8	--	--	--	3.04E8
Sr 90	1.72E11	--	4.38E10	--	--	--	2.15E9
Zr 95	4.66E2	1.13E2	8.04E1	--	1.22E2	--	5.65E4
Nb 95	9.42E4	3.88E4	2.24E4	--	2.78E4	--	3.27E7
Mo 99	--	1.27E7	2.47E6	--	1.89E7	--	4.17E6
I 131	8.17E8	9.63E8	4.23E8	3.16E11	1.12E9	--	3.44E7
I 133	1.02E7	1.49E7	4.36E6	2.71E9	1.75E7	--	2.52E6
Cs 134	7.23E10	1.35E11	1.36E10	--	3.47E10	1.42E10	3.66E8
Cs 137	1.04E11	1.22E11	8.63E9	--	3.27E10	1.32E10	3.81E8
Ba 140	1.45E7	1.45E4	7.48E5	--	3.44E3	8.91E3	3.56E6
La 140	2.430	9.59E-1	2.47E-1	--	--	--	1.13E4
Ce 141	2.74E3	1.67E3	1.96E2	--	5.14E2	--	8.62E5
Ce 144	1.79E5	7.32E4	1.00E4	--	2.96E4	--	1.03E7
Nd 147	5.32E1	5.47E1	3.35E0	--	2.11E1	--	3.46E4
Ag 110m	2.95E7	2.15E7	1.43E7	--	3.07E7	--	1.11E9

*mrem/yr per $\mu Ci/m^3$.

TABLE D 3-14
DOSE AND DOSE RATE
R_i VALUES - GOAT MILK - CHILD
$\frac{m^2\text{-mrem/yr}}{uCi/sec}$

NUCLIDE	BONE	LIVER	T. BODY	THYROID	KIDNEY	LUNG	GI-LLI
H 3*	--	4.17E3	4.17E3	4.17E3	4.17E3	4.17E3	4.17E3
C 14*	1.65E6	3.29E5	3.29E5	3.29E5	3.29E5	3.29E5	3.29E5
Cr 51	--	--	6.34E3	3.52E3	9.62E2	6.43E3	3.36E5
Mn 54	--	1.62E6	4.31E5	--	4.54E5	--	1.36E6
Fe 55	9.06E5	4.81E5	1.49E5	--	--	2.72E5	8.91E4
Fe 59	8.52E5	1.38E6	6.86E5	--	--	3.99E5	1.43E6
Co 58	--	8.35E5	2.56E6	--	--	--	4.87E6
Co 60	--	3.47E6	1.02E7	--	--	--	1.92E7
Zn 65	3.15E8	8.40E8	5.23E8	--	5.29E8	--	1.48E8
Sr 89	7.77E9	--	2.22E8	--	--	--	3.01E8
Sr 90	1.58E11	--	4.01E10	--	--	--	2.13E9
Zr 95	2.62E2	5.76E1	5.13E1	--	8.25E1	--	6.01E4
Nb 95	5.05E4	1.96E4	1.40E4	--	1.85E4	--	3.63E7
Mo 99	--	4.95E6	1.22E6	--	1.06E7	--	4.09E6
I 131	3.91E8	3.94E8	2.24E8	1.30E11	6.46E8	--	3.50E7
I 133	4.84E6	5.99E6	2.27E6	1.11E9	9.98E6	--	2.41E6
Cs 134	4.49E10	7.37E10	1.55E10	--	2.28E10	8.19E9	3.97E8
Cs 137	6.52E10	6.24E10	9.21E9	--	2.03E10	7.32E9	3.91E8
Ba 140	7.05E6	6.18E3	4.12E5	--	2.01E3	3.68E3	3.57E6
La 140	1.16	4.07E-1	1.37E-1	--	--	--	1.13E4
Ce 141	1.38E3	6.88E2	1.02E2	--	3.02E2	--	8.59E5
Ce 144	1.25E5	3.91E4	6.66E3	--	2.16E4	--	1.02E7
Nd 147	2.68E1	2.17E1	1.68E0	--	1.19E1	--	3.44E4
Ag 110m	1.60E7	1.08E7	8.60E6	--	2.00E7	--	1.28E9

*mrem/yr per $\mu Ci/m^3$.

TABLE D 3-15
DOSE AND DOSE RATE
R_i VALUES - GOAT MILK - TEEN
$\frac{m^2\text{-mrem/yr}}{uCi/sec}$

NUCLIDE	BONE	LIVER	T. BODY	THYROID	KIDNEY	LUNG	GI-LLI
H 3*	--	2.64E3	2.64E3	2.64E3	2.64E3	2.64E3	2.64E3
C 14*	6.70E5	1.34E5	1.34E5	1.34E5	1.34E5	1.35E5	1.34E5
Cr 51	--	--	3.11E3	1.73E3	6.82E2	4.44E3	5.23E5
Mn 54	--	1.08E6	2.15E5	--	3.23E5	--	2.22E6
Fe 55	3.61E5	2.56E5	5.97E4	--	--	1.62E5	1.11E5
Fe 59	3.67E5	8.57E5	3.31E5	--	--	2.70E5	2.03E6
Co 58	--	5.46E5	1.26E6	--	--	--	7.53E6
Co 60	--	2.23E6	5.03E6	--	--	--	2.91E7
Zn 65	1.61E8	5.58E8	2.60E8	--	3.57E8	--	2.36E8
Sr 89	3.14E9	--	8.99E7	--	--	--	3.74E8
Sr 90	9.36E10	--	2.31E10	--	--	--	2.63E9
Zr 95	1.13E2	3.56E1	2.45E1	--	5.23E1	--	8.22E4
Nb 95	2.23E4	1.24E4	6.82E3	--	1.20E4	--	5.30E7
Mo 99	--	2.72E6	5.19E5	--	6.23E6	--	4.87E6
I 131	1.61E8	2.26E8	1.21E8	6.59E10	3.89E8	--	4.47E7
I 133	1.99E6	3.38E6	1.03E6	4.72E8	5.93E6	--	2.56E6
Cs 134	1.95E10	4.58E10	2.13E10	--	1.46E10	5.56E9	5.70E8
Cs 137	2.71E10	3.60E10	1.25E10	--	1.23E10	4.76E9	5.12E8
Ba 140	2.92E6	3.58E3	1.88E5	--	1.21E3	2.41E3	4.50E6
La 140	4.86E-1	2.39E-1	6.36E-2	--	--	--	1.37E4
Ce 141	5.60E2	3.74E2	4.30E1	--	1.76E2	--	1.07E6
Ce 144	5.06E4	2.09E4	2.72E3	--	1.25E4	--	1.27E7
Nd 147	1.09E1	1.19E1	7.13E-1	--	6.99E0	--	4.29E4
Ag 110m	7.36E6	6.96E6	4.24E6	--	1.33E7	--	1.96E9

*mrem/yr per $\mu Ci/m^3$.

TABLE D 3-16
DOSE AND DOSE RATE
R_i VALUES - GOAT MILK - ADULT
$\frac{m^2\text{-mrem/yr}}{uCi/sec}$

NUCLIDE	BONE	LIVER	T. BODY	THYROID	KIDNEY	LUNG	GI-LLI
H 3*	--	2.03E3	2.03E3	2.03E3	2.03E3	2.03E3	2.03E3
C 14*	3.63E5	7.26E4	7.26E4	7.26E4	7.26E4	7.26E4	7.26E4
Cr 51	--	--	1.78E3	1.06E3	3.92E2	2.36E3	4.48E5
Mn 54	--	6.50E5	1.24E5	--	1.93E5	--	1.99E6
Fe 55	2.04E5	1.41E5	3.28E4	--	--	7.85E4	8.07E4
Fe 59	2.10E5	4.95E5	1.90E5	--	--	1.38E5	1.65E6
Co 58	--	3.25E5	7.27E5	--	--	--	6.58E6
Co 60	--	1.32E6	2.91E6	--	--	--	2.48E7
Zn 65	1.05E8	3.33E8	1.51E8	--	2.23E8	--	2.10E8
Sr 89	1.70E9	--	4.89E7	--	--	--	2.73E8
Sr 90	6.62E10	--	1.63E10	--	--	--	1.91E9
Zr 95	6.45E1	2.07E1	1.40E1	--	3.25E1	--	6.56E4
Nb 95	1.31E4	7.29E3	3.92E3	--	7.21E3	--	4.42E7
Mo 99	--	1.51E6	2.87E5	--	3.41E6	--	3.49E6
I 131	8.89E7	1.27E8	7.29E7	4.17E10	2.18E8	--	3.36E7
I 133	1.09E6	1.90E6	5.79E5	2.79E8	3.31E6	--	1.71E6
Cs 134	1.12E10	2.67E10	2.18E10	--	8.63E9	2.86E9	4.67E8
Cs 137	1.49E10	2.04E10	1.34E10	--	6.93E9	2.30E9	3.95E8
Ba 140	1.62E6	2.03E3	1.06E5	--	6.91E2	1.16E3	3.33E6
La 140	2.71E-1	1.36E-1	3.61E-2	--	--	--	1.00E4
Ce 141	3.06E2	2.07E2	2.34E1	--	9.60E1	--	7.90E5
Ce 144	2.75E4	1.15E4	1.48E3	--	6.82E3	--	9.30E6
Nd 147	5.69E0	6.57E0	3.93E-1	--	3.84E0	--	3.15E4
Ag 110m	4.45E6	4.12E6	2.45E6	--	8.09E6	--	1.68E9

*mrem/yr per $\mu Ci/m^3$.

TABLE D 3-17
DOSE AND DOSE RATE
R_i VALUES - COW MEAT - CHILD
$\frac{m^2\text{-mrem/yr}}{uCi/sec}$

NUCLIDE	BONE	LIVER	T. BODY	THYROID	KIDNEY	LUNG	GI-LLI
H 3*	--	2.34E2	2.34E2	2.34E2	2.34E2	2.34E2	2.34E2
C 14*	5.29E5	1.06E5	1.06E5	1.06E5	1.06E5	1.06E5	1.06E5
Cr 51	--	--	4.55E3	2.52E3	6.90E2	4.61E3	2.41E5
Mn 54	--	5.15E6	1.37E6	--	1.44E6	--	4.32E6
Fe 55	2.89E8	1.53E8	4.74E7	--	--	8.66E7	2.84E7
Fe 59	2.04E8	3.30E8	1.65E8	--	--	9.58E7	3.44E8
Co 58	--	9.41E6	2.88E7	--	--	--	5.49E7
Co 60	--	4.64E7	1.37E8	--	--	--	2.57E8
Zn 65	2.38E8	6.35E8	3.95E8	--	4.00E8	--	1.12E8
Sr 89	2.65E8	--	7.57E6	--	--	--	1.03E7
Sr 90	7.01E9	--	1.78E9	--	--	--	9.44E7
Zr 95	1.51E6	3.32E5	2.95E5	--	4.75E5	--	3.46E8
Nb 95	4.10E6	1.59E6	1.14E6	--	1.50E6	--	2.95E9
Mo 99	--	5.42E4	1.34E4	--	1.16E5	--	4.48E4
I 131	4.15E6	4.18E6	2.37E6	1.38E9	6.86E6	--	3.72E5
I 133	9.38E-2	1.16E-1	4.39E-2	2.15E1	1.93E-1	--	4.67E-2
Cs 134	6.09E8	1.00E9	2.11E8	--	3.10E8	1.11E8	5.39E6
Cs 137	8.99E8	8.60E8	1.27E8	--	2.80E8	1.01E8	5.39E6
Ba 140	2.20E7	1.93E4	1.28E6	--	6.27E3	1.15E4	1.11E7
La 140	2.80E-2	9.78E-3	3.30E-3	--	--	--	2.73E2
Ce 141	1.17E4	5.82E3	8.64E2	--	2.55E3	--	7.26E6
Ce 144	1.48E6	4.65E5	7.91E4	--	2.57E5	--	1.21E8
Nd 147	5.93E3	4.80E3	3.72E2	--	2.64E3	--	7.61E6
Ag 110m	5.62E6	3.79E6	3.03E6	--	7.05E6	--	4.52E8

*mrem/yr per $\mu Ci/m^3$.

TABLE D 3-18
DOSE AND DOSE RATE
R_i VALUES - COW MEAT - TEEN

$$\frac{m^2\text{-mrem/yr}}{uCi/sec}$$

NUCLIDE	BONE	LIVER	T. BODY	THYROID	KIDNEY	LUNG	GI-LLI
H 3*	--	1.94E2	1.94E2	1.94E2	1.94E2	1.94E2	1.94E2
C 14*	2.81E5	5.62E4	5.62E4	5.62E4	5.62E4	5.62E4	5.62E4
Cr 51	--	--	2.93E3	1.62E3	6.39E2	4.16E3	4.90E5
Mn 54	--	4.50E6	8.93E5	--	1.34E6	--	9.24E6
Fe 55	1.50E8	1.07E8	2.49E7	--	--	6.77E7	4.62E7
Fe 59	1.15E8	2.69E8	1.04E8	--	--	8.47E7	6.36E8
Co 58	--	8.05E6	1.86E7	--	--	--	1.11E8
Co 60	--	3.90E7	8.80E7	--	--	--	5.09E8
Zn 65	1.59E8	5.52E8	2.57E8	--	3.53E8	--	2.34E8
Sr 89	1.40E8	--	4.01E6	--	--	--	1.67E7
Sr 90	5.42E9	--	1.34E9	--	--	--	1.52E8
Zr 95	8.50E5	2.68E5	1.84E5	--	3.94E5	--	6.19E8
Nb 95	2.37E6	1.32E6	7.24E5	--	1.28E6	--	5.63E9
Mo 99	--	3.90E4	7.43E3	--	8.92E4	--	6.98E4
I 131	2.24E6	3.13E6	1.68E6	9.15E8	5.40E6	--	6.20E5
I 133	5.05E-2	8.57E-2	2.61E-2	1.20E1	1.50E-1	--	6.48E-2
Cs 134	3.46E8	8.13E8	3.77E8	--	2.58E8	9.87E7	1.01E7
Cs 137	4.88E8	6.49E8	2.26E8	--	2.21E8	8.58E7	9.24E6
Ba 140	1.19E7	1.46E4	7.68E5	--	4.95E3	9.81E3	1.84E7
La 140	1.53E-2	7.51E-3	2.00E-3	--	--	--	4.31E2
Ce 141	6.19E3	4.14E3	4.75E2	--	1.95E3	--	1.18E7
Ce 144	7.87E5	3.26E5	4.23E4	--	1.94E5	--	1.98E8
Nd 147	3.16E3	3.44E3	2.06E2	--	2.02E3	--	1.24E7
Ag 110m	3.39E6	3.20E6	1.95E7	--	6.13E6	--	9.01E8

*mrem/yr per $\mu Ci/m^3$.

TABLE D 3-19
DOSE AND DOSE RATE
R_i VALUES - COW MEAT - ADULT
$\frac{m^2\text{-mrem/yr}}{uCi/sec}$

NUCLIDE	BONE	LIVER	T. BODY	THYROID	KIDNEY	LUNG	GI-LLI
H 3*	--	3.25E2	3.25E2	3.25E2	3.25E2	3.25E2	3.25E2
C 14*	3.33E5	6.66E4	6.66E4	6.66E4	6.66E4	6.66E4	6.66E4
Cr 51	--	--	3.65E3	2.18E3	8.03E2	4.84E3	9.17E5
Mn 54	--	5.90E6	1.13E6	--	1.76E6	--	1.81E7
Fe 55	1.85E8	1.28E8	2.98E7	--	--	7.14E7	7.34E7
Fe 59	1.44E8	3.39E8	1.30E8	--	--	9.46E7	1.13E9
Co 58	--	1.04E7	2.34E7	--	--	--	2.12E8
Co 60	--	5.03E7	1.11E8	--	--	--	9.45E8
Zn 65	2.26E8	7.19E8	3.25E8	--	4.81E8	--	4.53E8
Sr 89	1.66E8	--	4.76E6	--	--	--	2.66E7
Sr 90	8.38E9	--	2.06E9	--	--	--	2.42E8
Zr 95	1.06E6	3.40E5	2.30E5	--	5.34E5	--	1.08E9
Nb 95	3.04E6	1.69E6	9.08E5	--	1.67E6	--	1.03E10
Mo 99	--	4.71E4	8.97E3	--	1.07E5	--	1.09E5
I 131	2.69E6	3.85E6	2.21E6	1.26E9	6.61E6	--	1.02E6
I 133	6.04E-2	1.05E-1	3.20E-2	1.54E1	1.83E-1	--	9.44E-2
Cs 134	4.35E8	1.03E9	8.45E8	--	3.35E8	1.11E8	1.81E7
Cs 137	5.88E8	8.04E8	5.26E8	--	2.73E8	9.07E7	1.56E7
Ba 140	1.44E7	1.81E4	9.44E5	--	6.15E3	1.04E4	2.97E7
La 140	1.86E-2	9.37E-3	2.48E-3	--	--	--	6.88E2
Ce 141	7.38E3	4.99E3	5.66E2	--	2.32E3	--	1.91E7
Ce 144	9.33E5	3.90E5	5.01E4	--	2.31E5	--	3.16E8
Nd 147	3.59E3	4.15E3	2.48E2	--	2.42E3	--	1.99E7
Ag 110m	4.48E6	4.14E6	2.46E6	--	8.13E6	--	1.69E9

*mrem/yr per $\mu Ci/m^3$.

TABLE D 3-20
DOSE AND DOSE RATE
R_i VALUES - VEGETATION - CHILD
$\frac{m^2\text{-mrem/yr}}{uCi/sec}$

NUCLIDE	BONE	LIVER	T. BODY	THYROID	KIDNEY	LUNG	GI-LLI
H 3*	--	4.01E3	4.01E3	4.01E3	4.01E3	4.01E3	4.01E3
C 14*	3.50E6	7.01E5	7.01E5	7.01E5	7.01E5	7.01E5	7.01E5
Cr 51	--	--	1.17E5	6.49E4	1.77E4	1.18E5	6.20E6
Mn 54	--	6.65E8	1.77E8	--	1.86E8	--	5.58E8
Fe 55	7.63E8	4.05E8	1.25E8	--	--	2.29E8	7.50E7
Fe 59	3.97E8	6.42E8	3.20E8	--	--	1.86E8	6.69E8
Co 58	--	6.45E7	1.97E8	--	--	--	3.76E8
Co 60	--	3.78E8	1.12E9	--	--	--	2.10E9
Zn 65	8.12E8	2.16E9	1.35E9	--	1.36E9	--	3.80E8
Sr 89	3.59E10	--	1.03E9	--	--	--	1.39E9
Sr 90	1.24E12	--	3.15E11	--	--	--	1.67E10
Zr 95	3.86E6	8.50E5	7.56E5	--	1.22E6	--	8.86E8
Nb 95	1.02E6	3.99E5	2.85E5	--	3.75E5	--	7.37E8
Mo 99	--	7.70E6	1.91E6	--	1.65E7	--	6.37E6
I 131	7.16E7	7.20E7	4.09E7	2.38E10	1.18E8	--	6.41E6
I 133	1.69E6	2.09E6	7.92E5	3.89E8	3.49E6	--	8.44E5
Cs 134	1.60E10	2.63E10	5.55E9	--	8.15E9	2.93E9	1.42E8
Cs 137	2.39E10	2.29E10	3.38E9	--	7.46E9	2.68E9	1.43E8
Ba 140	2.77E8	2.43E5	1.62E7	--	7.90E4	1.45E5	1.40E8
La 140	3.25E3	1.13E3	3.83E2	--	--	--	3.16E7
Ce 141	6.56E5	3.27E5	4.85E4	--	1.43E5	--	4.08E8
Ce 144	1.27E8	3.98E7	6.78E6	--	2.21E7	--	1.04E10
Nd 147	7.23E4	5.86E4	4.54E3	--	3.22E4	--	9.28E7
Ag 110m	3.21E7	2.17E7	1.73E7	--	4.04E7	--	2.58E9

*mrem/yr per $\mu Ci/m^3$.

TABLE D 3-21
DOSE AND DOSE RATE
R_i VALUES - VEGETATION - TEEN
$\frac{m^2\text{-mrem/yr}}{uCi/sec}$

NUCLIDE	BONE	LIVER	T. BODY	THYROID	KIDNEY	LUNG	GI-LLI
H 3*	--	2.59E3	2.59E3	2.59E3	2.59E3	2.59E3	2.59E3
C 14*	1.45E6	2.91E5	2.91E5	2.91E5	2.91E5	2.91E5	2.91E5
Cr 51	--	--	6.16E4	3.42E4	1.35E4	8.79E4	1.03E7
Mn 54	--	4.54E8	9.01E7	--	1.36E8	--	9.32E8
Fe 55	3.10E8	2.20E8	5.13E7	--	--	1.40E8	9.53E7
Fe 59	1.79E8	4.18E8	1.61E8	--	--	1.32E8	9.89E8
Co 58	--	4.37E7	1.01E8	--	--	--	6.02E8
Co 60	--	2.49E8	5.60E8	--	--	--	3.24E9
Zn 65	4.24E8	1.47E9	6.86E8	--	9.41E8	--	6.23E8
Sr 89	1.51E10	--	4.33E8	--	--	--	1.80E9
Sr 90	7.51E11	--	1.85E11	--	--	--	2.11E10
Zr 95	1.72E6	5.44E5	3.74E5	--	7.99E5	--	1.26E9
Nb 95	4.80E5	2.66E5	1.46E5	--	2.58E5	--	1.14E9
Mo 99	--	5.64E6	1.08E6	--	1.29E7	--	1.01E7
I 131	3.85E7	5.39E7	2.89E7	1.57E10	9.28E7	--	1.07E7
I 133	9.29E5	1.58E6	4.80E5	2.20E8	2.76E6	--	1.19E6
Cs 134	7.10E9	1.67E10	7.75E9	--	5.31E9	2.03E9	2.08E8
Cs 137	1.01E10	1.35E10	4.69E9	--	4.59E9	1.78E9	1.92E8
Ba 140	1.38E8	1.69E5	8.91E6	--	5.74E4	1.14E5	2.13E8
La 140	1.81E3	8.88E2	2.36E2	--	--	--	5.10E7
Ce 141	2.83E5	1.89E5	2.17E4	--	8.89E4	--	5.40E8
Ce 144	5.27E7	2.18E7	2.83E6	--	1.30E7	--	1.33E10
Nd 147	3.66E4	3.98E4	2.3863	--	2.34E4	--	1.44E8
Ag 110m	1.51E7	1.43E7	8.72E6	--	2.74E7	--	4.03E9

*mrem/yr per $\mu Ci/m^3$

TABLE D 3-22
DOSE AND DOSE RATE
R_i VALUES - VEGETATION - ADULT
$\frac{m^2\text{-mrem/yr}}{uCi/sec}$

NUCLIDE	BONE	LIVER	T. BODY	THYROID	KIDNEY	LUNG	GI-LLI
H 3*	--	2.26E3	2.26E3	2.26E3	2.26E3	2.26E3	2.26E3
C 14*	8.97E5	1.79E5	1.79E5	1.79E5	1.79E5	1.79E5	1.79E5
Cr 51	--	--	4.64E4	2.77E4	1.02E4	6.15E4	1.17E7
Mn 54	--	3.13E8	5.97E7	--	9.31E7	--	9.58E8
Fe 55	2.00E8	1.38E8	3.22E7	--	--	7.69E7	7.91E7
Fe 59	1.26E8	2.96E8	1.13E8	--	--	8.27E7	1.02E9
Co 58	--	3.08E7	6.90E7	--	--	--	6.24E8
Co 60	--	1.67E8	3.69E8	--	--	--	3.14E9
Zn 65	3.17E8	1.01E9	4.56E8	--	6.75E8	--	6.36E8
Sr 89	9.96E9	--	2.86E8	--	--	--	1.60E9
Sr 90	6.05E11	--	1.48E11	--	--	--	1.75E10
Zr 95	1.18E6	3.77E5	2.55E5	--	5.92E5	--	1.20E9
Nb 95	3.55E5	1.98E5	1.06E5	--	1.95E5	--	1.20E9
Mo 99	--	6.14E6	1.17E6	--	1.39E7	--	1.42E7
I 131	4.04E7	5.78E7	3.31E7	1.90E10	9.91E7	--	1.53E7
I 133	1.00E6	1.74E6	5.30E5	2.56E8	3.03E6	--	1.56E6
Cs 134	4.67E9	1.11E10	9.08E9	--	3.59E9	1.19E9	1.94E8
Cs 137	6.36E9	8.70E9	5.70E9	--	2.95E9	9.81E8	1.68E8
Ba 140	1.29E8	1.61E5	8.42E6	--	5.49E4	9.25E4	2.65E8
La 140	1.98E3	9.97E2	2.63E2	--	--	--	7.32E7
Ce 141	1.97E5	1.33E5	1.51E4	--	6.19E4	--	5.09E8
Ce 144	3.29E7	1.38E7	1.77E6	--	8.16E6	--	1.11E10
Nd 147	3.36E4	3.88E4	2.32E3	--	2.27E4	--	1.86E8
Ag 110m	1.05E7	9.75E6	5.79E6	--	1.92E7	--	3.98E9

*mrem/yr per $\mu Ci/m^3$

TABLE D 3-23
DISPERSION PARAMETERS AT CONTROLLING LOCATIONS[1]
X/Q,W_v and W_s VALUES

VENT	DIRECTION	DISTANCE (m)	X/Q (sec/m^3)	D/Q (m^{-2})
Site Boundary[2]	E	1,600	2.00 E-6	2.10E-9
Inhalation and Ground Plane	E (104°)	1,800	1.42E-7	2.90E-9
Cow Milk	ESE (130°)	4,300	4.11E-8	4.73E-10
Goat Milk[3]	SE (140°)	4,800	3.56E-08	5.32E-10
Meat Animal	E (114°)	2,600	1.17E-7	1.86E-9
Vegetation	E (96°)	2,900	1.04E-7	1.50E-9
STACK				
Site Boundary[2]	E	1,600	4.50E-8	6.00E-9
Inhalation and Ground Plane	E (109°)	1,700	8.48E-9	1.34E-9
Cow Milk	ESE (135°)	4,200	1.05E-8	3.64E-10
Goat Milk[3]	SE (140°)	4,800	2.90E-08	5.71E-10
Meat Animal	E (114°)	2,500	1.13E-8	1.15E-9
Vegetation	E (96°)	2,800	1.38E-8	9.42E-10

NOTE: Inhalation and Ground Plane are annual average values. Others are grazing season only.

[1] X/Q and D/Q values from NMP-2 ER-OLS.
[2] X/Q and D/Q from NMP-2 FES, NUREG-1085, May 1985, Table D-2.
[3] X/Q and D/Q from C.T. Main Data Report dated November 1985.

TABLE D 3-24
PARAMETERS FOR THE EVALUATION OF DOSES TO REAL MEMBERS OF THE PUBLIC FROM GASEOUS AND LIQUID EFFLUENTS

Pathway	Parameter	Value	Reference
Fish	U (kg/yr) - adult	21	Reg. Guide 1.109 Table E-5
Fish	D_{aipj} (mrem/pCi)	Each Radionuclide	Reg. Guide 1.109 Table E-11
Shoreline	U (hr/yr)		
	- adult	67	Reg. Guide 1.109
	- teen	67	Assumed to be Same as Adult
Shoreline	D_{aipj} (mrem/hr per pCi/m^2)	Each Radionuclide	Reg. Guide 1.109 Table E-6
Inhalation	DFA_{ija}	Each Radionuclide	Reg. Guide 1.109 Table E-7

TABLE D 5.1
NINE MILE POINT NUCLEAR STATION
RADIOLOGICAL ENVIRONMENTAL MONITORING PROGRAM
SAMPLING LOCATIONS

Type of Sample	* Map Location	Collection Site (Env. Program No.)	Location
Radioiodine and Particulates (air)	1	Nine Mile Point Road North (R-1)	1.8 mi @ 88° E
Radioiodine and Particulates (air)	2	County Route 29 & Lake Road (R-2)	1.1 mi @ 104° ESE
Radioiodine and Particulates (air)	3	County Route 29 (R-3)	1.5 mi @ 132° SE
Radioiodine and Particulates (air)	4	Village of Lycoming, NY (R-4)	1.8 mi @ 143° SE
Radioiodine and Particulates (air)	5	Montario Point Road (R-5)	16.4 mi @ 42° NE
Direct Radiation (TLD)	6	North Shoreline Area (75)	0.1 mi @ 5° N
Direct Radiation (TLD)	7	North Shoreline Area (76)	0.1 mi @ 25° NNE
Direct Radiation (TLD)	8	North Shoreline Area (77)	0.2 mi @ 45° NE
Direct Radiation (TLD)	9	North Shoreline Area (23)	0.8 mi @ 70° ENE
Direct Radiation (TLD)	10	JAF East Boundary (78)	1.0 mi @ 90° E
Direct Radiation (TLD)	11	Route 29 (79)	1.1 mi @ 115° SE
Direct Radiation (TLD)	12	Route 29 (80)	1.4 mi @ 133° SE
Direct Radiation (TLD)	13	Miner Road (81)	1.6 mi @ 159° SSE
Direct Radiation (TLD)	14	Miner Road (82)	1.6 mi @ 181° S
Direct Radiation (TLD)	15	Lakeview Road (83)	1.2 mi @ 200° SSW
Direct Radiation (TLD)	16	Lakeview Road (84)	1.1 mi @ 225° SW
Direct Radiation (TLD)	17	Site Meteorological Tower (7)	0.7 mi @ 250° WSW
Direct Radiation (TLD)	18	Energy Information Center (18)	0.4 mi @ 265° W
Direct Radiation (TLD)	19	North Shoreline (85)	0.2 mi @ 294° WNW

* Map = See Figures D 5.1-1 and D 5.1-2.

TABLE D 5.1 (Cont'd)
NINE MILE POINT NUCLEAR STATION
RADIOLOGICAL ENVIRONMENTAL MONITORING PROGRAM
SAMPLING LOCATIONS

Type of Sample	* Map Location	Collection Site (Env. Program No.)	Location
Direct Radiation (TLD)	20	North Shoreline (86)	0.1 mi @ 315° NW
Direct Radiation (TLD)	21	North Shoreline (87)	0.1 mi @ 341° NNW
Direct Radiation (TLD)	22	Hickory Grove (88)	4.5 mi @ 97° E
Direct Radiation (TLD)	23	Leavitt Road (89)	4.1 mi @ 111° ESE
Direct Radiation (TLD)	24	Route 104 (90)	4.2 mi @ 135° SE
Direct Radiation (TLD)	25	Route 51A (91)	4.8 mi @ 156° SSE
Direct Radiation (TLD)	26	Maiden Lane Road (92)	4.4 mi @ 183° S
Direct Radiation (TLD)	27	County Route 53 (93)	4.4 mi @ 205° SSW
Direct Radiation (TLD)	28	County Route 1 (94)	4.7 mi @ 223° SW
Direct Radiation (TLD)	29	Lake Shoreline (95)	4.1 mi @ 237° WSW
Direct Radiation (TLD)	30	Phoenix, NY Control (49)	19.8 mi @ 163° S
Direct Radiation (TLD)	31	S. W. Oswego, Control (14)	12.6 mi @ 226° SW
Direct Radiation (TLD)	32	Scriba, NY (96)	3.6 mi @ 199° SSW
Direct Radiation (TLD)	33	Alcan Aluminum, Route 1A (58)	3.1 mi @ 220° SW
Direct Radiation (TLD)	34	Lycoming, NY (97)	1.8 mi @ 143° SE
Direct Radiation (TLD)	35	New Haven, NY (56)	5.3 mi @ 123° ESE
Direct Radiation (TLD)	36	W. Boundary, Bible Camp (15)	0.9 mi @ 237° WSW
Direct Radiation (TLD)	37	Lake Road (98)	1.2 mi @ 101° E

* Map = See Figures D 5.1-1 and D 5.1-2.

TABLE D 5.1 (Cont'd)
NINE MILE POINT NUCLEAR STATION
RADIOLOGICAL ENVIRONMENTAL MONITORING PROGRAM
SAMPLING LOCATIONS

Type of Sample	* Map Location	Collection Site (Env. Program No.)	Location
Surface Water	38	OSS Inlet Canal (NA)	7.6 mi @ 235° SW
Surface Water	39	JAFNPP Inlet Canal (NA)	0.5 mi @ 70° ENE
Shoreline Sediment	40	Sunset Bay Shoreline (NA)	1.5 mi @ 80° E
Fish	41	NMP Site Discharge Area (NA)	0.3 mi @ 315° NW (and/or)
Fish	42	NMP Site Discharge Area (NA)	0.6 mi @ 55° NE
Fish	43	Oswego Harbor Area (NA)	6.2 mi @ 235° SW
Milk	44	Milk Location #50	8.2 mi @ 93° E
Milk	45	Milk Location #7	5.5 mi @ 107° ESE
Milk	★ 47	Milk Location #65	17.0 mi @ 220° SW
Milk	64	Milk Location #55	9.0 mi @ 95° E
Milk	65	Milk Location #60	9.5 mi @ 90° E
Milk	66	Milk Location #4	7.8 mi @ 113° ESE
Milk (CR)	73	Milk Location (Woodworth)	13.9 mi @ 234° SW
Food Product	48	Produce Location #6** (Bergenstock) (NA)	1.9 mi @ 141° SE
Food Product	49	Produce Location #1** (Culeton) (NA)	1.7 mi @ 96° E
Food Product	50	Produce Location #2** (Vitullo) (NA)	1.9 mi @ 101° E
Food Product	51	Produce Location #5** (C.S. Parkhurst) (NA)	1.5 mi @ 114° ESE
Food Product	52	Produce Location #3** (C. Narewski) (NA)	1.6 mi @ 84° E

★ = The Jones milk location has been deleted due to the herd being sold. (Map location #46.)
* Map = See Figures D 5.1-1 and D 5.1-2.
** = Food Product Samples need not necessarily be collected from all listed locations. Collected samples will be of the highest calculated site average D/Q.
(NA) = Not applicable.
CR = Control Result (location).

TABLE D 5.1 (Cont'd)
NINE MILE POINT NUCLEAR STATION
RADIOLOGICAL ENVIRONMENTAL MONITORING PROGRAM
SAMPLING LOCATIONS

Type of Sample	* Map Location	Collection Site (Env. Program No.)	Location
Food Product	53	Produce Location #4** (P. Parkhurst) (NA)	2.1 mi @ 110° ESE
Food Product (CR)	54	Produce Location #7** (Mc Millen) (NA)	15.0 mi @ 223° SW
Food Product (CR)	55	Produce Location #8** (Denman) (NA)	12.6 mi @ 225° SW
Food Product	56	Produce Location #9** (O'Connor) (NA)	1.6 mi @ 171° S
Food Product	57	Produce Location #10** (C. Lawton) (NA)	2.2 mi @ 123° ESE
Food Product	58	Produce Location #11** (C. R. Parkhurst) (NA)	2.0 mi @ 112° ESE
Food Product	59	Produce Location #12** (Barton) (NA)	1.9 mi @ 115° ESE
Food Product (CR)	60	Produce Location #13** (Flack) (NA)	15.6 mi @ 225° W
Food Product	61	Produce Location #14** (Koeneke) (NA)	1.9 mi @ 95° E
Food Product	62	Produce Location #15** (Whaley) (NA)	1.7 mi @ 136° SE
Food Product	63	Produce Location #16** (Murray) (NA)	1.2 mi @ 207° SSW
Food Product	67	Produce Location #17** (Battles) (NA)	1.76 mi @ 97° E

* Map = See Figures D 5.1-1 and D 5.1-2.
** = Food Product Samples need not necessarily be collected from all listed locations. Collected samples will be of the highest calculated site average D/Q.
(NA) = Not applicable.
CR = Control Result (location).

APPENDIX A

LIQUID DOSE FACTOR DERIVATION

Appendix A

Liquid Effluent Dose Factor Derivation, A_{iat}

A_{iat} (mrem/hr per uCi/ml) which embodies the dose conversion factors, pathway transfer factors (e.g., bioaccumulation factors), pathway usage factors, and dilution factors for the points of pathway origin takes into account the dose from ingestion of fish and drinking water and the sediment. The total body and organ dose conversion factors for each radionuclide will be used from Table E-11 of Regulatory Guide 1.109. To expedite time, the dose is calculated for a maximum individual instead of each age group. The maximum individual dose factor is a composite of the highest dose factor A_{iat} of each nuclide i age group a, and organ t, hence A_{1at}. It should be noted that the fish ingestion pathway is the most significant pathway for dose from liquid effluents. The water consumption pathway is included for consistency with NUREG 0133.

The equation for calculating dose contributions given in section 1.3 requires the use of the composite dose factor A_{it} for each nuclide, i. The dose factor equation for a fresh water site is:

$$A_{iat} = K_o\left[\left(\frac{U_w\, e^{-\lambda_i t_{pw}}}{D_w} + U_f\, BF_i\, e^{-\lambda_i t_{pf}}\right) DFL_{iat} + \frac{69.3 U_s W\, e^{-\lambda_i t_{ps}}}{D_s \lambda_i}\left(1 - e^{-\lambda_i t_b}\right) DFS_i\right]$$

Where:

A_{iat} = Is the dose factor for nuclide i, age group a, total body or organ t, for all appropriate pathways, (mrem/hr per uCi/ml)

Ko = Is the unit conversion factor, 1.14E5=1E6pCi/uCi x 1E3 ml/L -:- 8760 hr/yr

U_w = Water consumption (l/yr); from Table E-5 of Reg. Guide 1.109

U_f = Fish consumption (Kg/yr); from Table E-5 of Reg. Guide 1.109

U_s = Sediment Shoreline Usage (hr/yr); from Table E-5 of Reg. Guide 1.109

BF_i = Bioaccumulation factor for nuclide, i, in fish, (pCi/kg per pCi/1), from Table A-1 of Reg. Guide 1.109

DFL_{iat} = Dose conversion factor for age, nuclide, i, group a, total body or organ t, (mrem/pCi); from Table E-11 of Reg. Guide 1.109

DFS_i = Dose conversion factor for nuclide i and total body, from standing on contaminated ground (mrem/hr per pCi/m^2); from Table E-6 of Reg. Guide 1.109

D_w	=	Dilution factor from the near field area within one-quarter mile of the release point to the potable water intake for the adult water consumption. This is the Metropolitan Water Board, Onondaga County intake structure located west of the City of Oswego. (Unitless)
D_s	=	Dilution factor from the near field area within one quarter mile of the release point to the shoreline deposit (taken at the same point where we take environmental samples 1.5 miles; unitless)
69.3	=	conversion factor .693 x 100, 100 = K_c (L/kg-hr)*40 kg/m^2*24 hr/day/.693 in L/m^2-d, and K_c = transfer coefficient from water to sediment in L/kg per hour.
t_{pw}, t_{pf}, t_{ps}	=	Average transit time required for each nuclide to reach the point of exposure for internal dose, it is the total time elapsed from release of the nuclides to either ingestion for water (w) and fish (f) or shoreline deposit (s), (hr)
t_b	=	Length of time the sediment is exposed to the contaminated water, nominally 15 yrs (approximate midpoint of facility operating life), (hrs).
λ_i	=	decay constant for nuclide i (hr^{-1})
W	=	Shore width factor (unitless) from Table A-2 of Reg. Guide 1.109

Example Calculation
For I-131 Thyroid Dose Factor for an Adult from a Radwaste liquid effluents release:

$(DFS)_i$	= 2.80E-9 mrem/hr per pCi/m^2				
$(DFL)_{iat}$	= 1.95E-3 mrem/pCi		t_{pw}	=	40 hrs. (w = water)
BF_i	= 15	pCi/Kg per pCi/L	t_{pf}	=	24 hrs. (f = fish)
U_f	= 21	Kg/yr	t_b	=	1.314E5 hr (5.48E3 days)
D_w	= 62	unitless	U_w	=	730 L/yr
D_s	= 17.8	unitless	Ko	=	1.14E5 (pCi/uCi)(ml/kg) / (hr/yr)
U_s	= 12	hr/yr			
W	= 0.3		λ_i	=	3.61E-3hr^{-1}
t_{ps}	= 7.3	hrs (s=Shoreline Sediment)			

These values will yield an A_{iat} Factor of 6.65E4 mrem-ml per uCi-hr as listed in Table D 2-2. It should be noted that only a limited number of nuclides are listed on Tables D 2-2 to D 2-5. These are the most common nuclides encountered in effluents. If a nuclide is detected for which a factor is not listed, then it will be calculated and included in a revision to the ODCM.

In addition, not all dose factors are used for the dose calculations. A maximum individual is used, which is a composite of the maximum dose factor of each age group for each organ as reflected in the applicable chemistry procedures.

APPENDIX B

PLUME SHINE DOSE FACTOR DERIVATION

Appendix B

For elevated releases the plume shine dose factors for gamma air (B_i) and whole body (V_i), are calculated using the finite plume model with an elevation above ground equal to the stack height. To calculate the plume shine factor for gamma whole body doses, the gamma air dose factor is adjusted for the attenuation of tissue, and the ratio of mass absorption coefficients between tissue and air. The equations are as follows:

Gamma Air

$$B_i = \sum_s \frac{K\mu_a E\ I_s}{R\Theta\ V_s}$$

Where:

K^1	=	conversion factor (see below for actual value).
μ_a	=	mass absorption coefficient (cm^2/g; air for B_i, tissue for V_i)
E	=	Energy of gamma ray per disintegration (Mev)
V_s	=	average wind speed for each stability class (s), m/s
R	=	downwind distance (site boundary, m)
Θ	=	sector width (radians)
s	=	subscript for stability class
I_s	=	I function = $I_1 + kI_2$ for each stability class. (unitless, see Regulatory Guide 1.109)
k^2	=	Fraction of the attenuated energy that is actually absorbed in air (see Regulatory Guide 1.109, see below for equation)

Whole Body

$$V_i = 1.11 S_F B_i e^{-\mu_a t_d}$$

Where:

t_d	=	tissue depth (g/cm^2)
S_F	=	shielding factor from structures (unitless)
1.11	=	Ratio of mass absorption coefficients between tissue and air.

Where all other parameters are defined above.

---

[1]K = conversion factor = $\dfrac{3.7\ E10\ \frac{dis}{Ci\text{-}sec}\quad 1.6\ E\text{-}6\ \frac{erg}{Mev}}{1293\ \frac{g}{m^3}\quad 100\ \frac{erg}{g\text{-}rad}}$ = .46

[2]$k = \dfrac{\mu - \mu_a}{\mu_a}$

Where: μ = mass attenuation coefficient (cm^2/g; air for B_i, tissue for V_i)

μ_a = defined above

There are seven stability classes, A thru F. The percentage of the year that each stability class is taken from the U-2 FSAR. From this data, a plume shine dose factor is calculated for each stability class and each nuclide, multiplied by its respective fraction and then summed.

The wind speeds corresponding to each stability class are, also, taken from the Unit 2 FSAR. To confirm the accuracy of these values, an average of the 12 month wind speeds for 1985, 1986, 1987 and 1988 was compared to the average of the FSAR values. The average wind speed of
the actual data is equal to 6.78 m/s, which compared favorably to the FSAR average wind speed equal to 6.77 m/s.

The average gamma energies were calculated using a weighted average of all gamma energies emitted from the nuclide. These energies were taken from the handbook "Radioactive Decay Data Tables", David C. Kocher.

The mass absorption (μ_a) and attenuation (μ) coefficients were calculated by multiplying the mass absorption (μ_a/ρ) and mass attenuation (μ/ρ) coefficients given in the Radiation Health Handbook by the air density equal to 1.293 E-3 g/cc or the tissue density of 1 g/cc where applicable. The tissue depth is $5 g/cm^2$ for the whole body.

The downwind distance is the site boundary.

SAMPLE CALCULATION

Ex. Kr-89 F STABILITY CLASS ONLY - Gamma Air

-DATA

E = 2.22MeV $k = \dfrac{\mu - \mu_a}{\mu_a}$ = .871 K = .46

μ_a = 2.943 E-3m^{-1} V_F = 5.55 m/sec

μ = 5.5064E-3m^{-1} R = 1600m

θ = .39

σ_z = 19m vertical plume spread taken from "Introduction to Nuclear Engineering", John R. LaMarsh

-I Function

$U\sigma_z = .11$

$I_1 = .3$

$I_2 = .4$

$I = I_1 + kI_2 = .3 + (.871)(.4) = .65$

$$B_i = \frac{0.46 \left[\frac{(Ci\text{-}sec)(Mev/ergs)}{(g/m^3)\ (\frac{ergs}{g\text{-}rad})}\right]^{dis.}}{(\pi^{1/2})} \frac{(2.943E\text{-}3m^{-1})(2.22Mev)(.65)}{(5.55\ m/s)\ (.39)\ (1600m)}$$

$$= 3.18(-7)\ \frac{rad/s}{Ci/s}\ \frac{(3600\ s/hr)\ (24\ h/d)\ (365\ d/y)\ (1E3mrad/rad)}{(\frac{1E6uCi}{Ci})}$$

$$= 1.00(-2)\ \frac{mrad/yr}{uCi/sec}$$

$$V_i = 1.11\ (.7)\ (1E\text{-}2)\ \left[\frac{mrad/yr}{\mu Ci/sec}\right]\ [e^{-(.0253\ cm^2/g)(5g/cm^2)}]$$

$$= 6.85(-3)\ \frac{mrad/yr}{\mu Ci/sec}$$

<u>Note</u>: The above calculation is for the F stability class only. For Table D 3-2 and procedure values, a weighted fraction of each stability class was used to determine the B_i and V_i values.

APPENDIX C

DOSE PARAMETERS FOR IODINE 131 and 133, PARTICULATES AND TRITIUM

Appendix C

DOSE PARAMETERS FOR IODINE - 131 AND - 133, PARTICULATES AND TRITIUM

This appendix contains the methodology which was used to calculate the organ dose factors for I-131, I-133, particulates, and tritium. The dose factor, R_i, was calculated using the methodology outlined in NUREG-0133. The radioiodine and particulate DLCO 3.2.1 is applicable to the location in the unrestricted area where the combination of existing pathways and receptor age groups indicates the maximum potential exposure occurs, i.e., the critical receptor. Washout was calculated and determined to be negligible. R_i values have been calculated for the adult, teen, child and infant age groups for all pathways. However, for dose compliance calculations, a maximum individual is assumed that is a composite of highest dose factor of each age group for each organ and pathway. The methodology used to calculate these values follows:

C.1 Inhalation Pathway

$$R_i(I) = K'(BR)_a(DFA)_{ija}$$

where:

$R_i(I)$ = dose factor for each identified radionuclide i of the organ of interest (units = mrem/yr per uCi/m^3);

K' = a constant of unit conversion, 1E6 pCi/uCi

$(BR)_a$ = Breathing rate of the receptor of age group a, (units = m^3/yr);

$(DFA)_{ija}$ = The inhalation dose factor for nuclide i, organ j and age group a, and organ t (units = mrem/pCi).

The breathing rates $(BR)_a$ for the various age groups, as given in Table E-5 of Regulatory Guide 1.109 Revision 1, are tabulated below.

Age Group (a)	Breathing Rate (m^3/yr)
Infant	1400
Child	3700
Teen	8000
Adult	8000

Inhalation dose factors $(DFA)_{ija}$ for the various age groups are given in Tables E-7 through E-10 of Regulatory Guide 1.109 Revision 1.

C.2 Ground Plane Pathway

$$R_i(G) = \frac{K'K''(SF)(DFG)_i}{\lambda_i}(1-e^{-\lambda_i t})$$

Where:

$R_i(G)$	=	Dose factor for the ground plane pathway for each identified radionuclide i for the organ of interest (units = m^2-mrem/yr per uCi/sec)
K'	=	A constant of unit conversion, 1E6 pCi/uCi
K''	=	A constant of unit conversion, 8760 hr/year
λ_i	=	The radiological decay constant for radionuclide i, (units = sec^{-1})
t	=	The exposure time, sec, 4.73E8 sec (15 years)
$(DFG)_i$	=	The ground plane dose conversion factor for radionuclide i; (units = mrem/hr per pCi/m^2)
SF	=	The shielding factor (dimensionless)

A shielding factor of 0.7 is discussed in Table E-15 of Regulatory Guide 1.109 Revision 1. A tabulation of DFG_i values is presented in Table E-6 of Regulatory Guide 1.109 Revision 1.

C.3 Grass-(Cow or Goat)-Milk Pathway

$$R_i(C) = \frac{K' Q_f (U_{ap})\ F_m (r)\ (DFL)_{iat}}{(\lambda_i + \lambda_w)\ Y_p} \left[\frac{f_p f_s}{Y_s} + \frac{(1-f_p f_s)}{} \left(e^{-\lambda_i t_h} - e^{-\lambda_i t_f} \right) \right]$$

Where:

$R_i(C)$	=	Dose factor for the cow milk or goat milk pathway, for each identified radionuclide i for the organ of interest, (units = m2-mrem/yr per uCi/sec)
K'	=	A constant of unit conversion, 1E6 pCi/uCi
Q_f	=	The cow's or goat's feed consumption rate, (units = Kg/day-wet weight)
U_{ap}	=	The receptor's milk consumption rate for age group a, (units = liters/yr)
Y_p	=	The agricultural productivity by unit area of pasture feed grass, (units = kg/m2)
Y_s	=	The agricultural productivity by unit area of stored feed, (units = kg/m2)
F_m	=	The stable element transfer coefficients, (units = pCi/liter per pCi/day)
r	=	Fraction of deposited activity retained on cow's feed grass
$(DFL)_{iat}$	=	The ingestion dose factor for nuclide i, age group a, and total body or organ t (units = mrem/pCi)
λi	=	The radiological decay constant for radionuclide i, (units=sec -1)
λw	=	The decay constant for removal of activity on leaf and plant surfaces by weathering equal to 5.73E-7 sec -1 (corresponding to a 14 day half-life)
t_f	=	The transport time from pasture to cow or goat, to milk, to receptor, (units = sec)
t_h	=	The transport time from pasture, to harvest, to cow or goat, to milk, to receptor (units = sec)
f_p	=	Fraction of the year that the cow or goat is on pasture (dimensionless)
f_s	=	Fraction of the cow feed that is pasture grass while the cow is on pasture (dimensionless)

Milk cattle and goats are considered to be fed from two potential sources, pasture grass and stored feeds. Following the development in Regulatory Guide 1.109 Revision 1, the value of f_s is considered unity in lieu of site specific information. The value of f_p is 0.5 based on 6 month grazing period. This value for f_p was obtained from the environmental group.

Table C-1 contains the appropriate values and their source in Regulatory Guide 1.109 Revision 1.

The concentration of tritium in milk is based on the airborne concentration rather than the deposition. Therefore, the $R_T(C)$ is based on X/Q:

$$R_T(C) = K'K''' F_m Q_f U_{ap} (DFL)_{iat} \; 0.75(0.5/H)$$

Where:

$R_T(C)$	=	Dose factor for the cow or goat milk pathway for tritium for the organ of interest, (units = mrem/yr per uCi/m^3)
K'''	=	A constant of unit conversion, 1E3 g/kg
H	=	Absolute humidity of the atmosphere, (units = g/m^3)
0.75	=	The fraction of total feed that is water
0.5	=	The ratio of the specific activity of the feed grass water to the atmospheric water

Other values are given previously. A site specific value of H equal to 6.14 g/m^3 is used. This value was obtained from the environmental group using actual site data.

C.4 Grass-Cow-Meat Pathway

$$R_i(C) = \frac{K'Q_f U_{ap} F_f(r) DFL_{iat}}{(\lambda_i + \lambda_w)} \left[\frac{f_p f_s}{Y_p} + \frac{(1 - f_p f_s) e^{-\lambda_i t_h}}{Y_s} \right] e^{-\lambda_i t_f}$$

$R_i(M)$ = Dose factor for the meat ingestion pathway for radionuclide i for any organ of interest, (units = m^2-mrem/yr per uCi/sec)

F_f = The stable element transfer coefficients, (units = pCi/kg per pCi/day)

U_{ap} = The receptor's meat consumption rate for age group a, (units = kg/year)

t_h = The transport time from harvest, to cow, to receptor, (units = sec)

t_f = The transport time from pasture, to cow, to receptor, (units = sec)

All other terms remain the same as defined for the milk pathway. Table C-2 contains the values which were used in calculating $R_i(M)$.

The concentration of tritium in meat is based on airborne concentration rather than deposition. Therefore, the $R_T(M)$ is based on X/Q.

$$R_T(M) = K'K'''F_f Q_f U_{ap} (DFL)_{iat} [0.75(0.5/H)]$$

Where:

$R_T(M)$ = Dose factor for the meat ingestion pathway for tritium for any organ of interest, (units = mrem/yr per uCi/m^3)

All other terms are defined above.

C.5 Vegetation Pathway

The integrated concentration in vegetation consumed by man follows the expression developed for milk. Man is considered to consume two types of vegetation (fresh and stored) that differ only in the time period between harvest and consumption, therefore:

$$R_i(V) = K' \frac{r}{Y_v(\lambda_i + \lambda_w)} (DFL)_{iat} \left[U^L{}_a F_L e^{-\lambda_i t_L} + U^S{}_a F_g e^{-\lambda_i t_h} \right]$$

Where:

$R_i(V)$	=	Dose factor for vegetable pathway for radionuclide i for the organ of interest, (units = m^2-mrem/yr per uCi/sec)
K'	=	A constant of unit conversion, 1E6 pCi/uCi
U^L_a	=	The consumption rate of fresh leafy vegetation by the receptor in age group a, (units = kg/yr)
U^S_a	=	The consumption rate of stored vegetation by the receptor in age group a (units = kg/yr)
F_L	=	The fraction of the annual intake of fresh leafy vegetation grown locally
F_g	=	The fraction of the annual intake of stored vegetation grown locally
t_L	=	The average time between harvest of leafy vegetation and its consumption, (units = sec)
t_h	=	The average time between harvest of stored vegetation and its consumption, (units = sec)
Y_v	=	The vegetation areal P density, (units = kg/m^2)

All other factors have been defined previously.

Table C-3 presents the appropriate parameter values and their source in Regulatory Guide 1.109 Revision 1.

In lieu of site-specific data, values for F_L and F_g of, 1.0 and 0.76, respectively, were used in the calculation. These values were obtained from Table E-15 of Regulatory Guide 1.109 Revision 1.

The concentration of tritium in vegetation is based on the airborne concentration rather than the deposition. Therefore, the $R_T(V)$ is based on X/Q:

$$R_T(V) = K'K''' [U^L_a f_L + U^s_a f_g](DFL)_{iat} 0.75(0.5/H)$$

Where:

$R_T(V)$	=	dose factor for the vegetable pathway for tritium for any organ of interest, (units = mrem/yr per uCi/m^3).

All other terms are defined in preceeding sections.

TABLE C-1

Parameters for Grass - (Cow or Goat) - Milk Pathways

Parameter	Value	Reference (Reg. Guide 1.109 Rev. 1)
Q_f (kg/day)	50 (cow) 6 (goat)	Table E-3 Table E-3
r	1.0 (radioiodines) 0.2 (particulates)	Table E-15 Table E-15
$(DFL)_{ija}$ (mrem/pCi)	Each radionuclide	Tables E-11 to E-14
F_m (pCi/liter per pCi/day)	Each stable element	Table E-1 (cow) Table E-2 (goat)
Y_s (kg/m^2)	2.0	Table E-15
Y_p (kg/m^2)	0.7	Table E-15
t_h (seconds)	7.78×10^6 (90 days)	Table E-15
t_f (seconds)	1.73×10^5 (2 days)	Table E-15
U_{ap} (liters/yr)	330 infant 330 child 400 teen 310 adult	Table E-5 Table E-5 Table E-5 Table E-5

TABLE C-2

Parameters for the Grass-Cow-Meat Pathway

Parameter	Value	Reference (Reg. Guide 1.109 Rev. 1)
r	1.0 (radioiodines) 0.2 (particulates)	Table E-15 Table E-15
F_f (pCi/Kg per pCi/day)	Each stable element	Table E-1
U_{ap} (Kg/yr)	0 infant 41 child 65 teen 110 adult	Table E-5 Table E-5 Table E-5 Table E-5
$(DFL)_{ija}$ (mrem/pCi)	Each radionuclide	Tables E-11 to E-14
Y_p (kg/m^2)	0.7	Table E-15
Y_s (kg/m^2)	2.0	Table E-15
t_h (seconds)	7.78E6 (90 days)	Table E-15
t_f (seconds)	1.73E6 (20 days)	Table E-15
Q_f (kg/day)	50	Table E-3

TABLE C-3

Parameters for the Vegetable Pathway

Parameter	Value	Reference (Reg. Guide 1.109 Rev. 1)
r (dimensionless)	1.0 (radioiodines)	Table E-1
	0.2 (particulates)	Table E-1
$(DFL)_{ija}$ (mrem/pCi)	Each radionuclide	Tables E-11 to E-14
$U^L)_a$ (kg/yr) - infant	0	Table E-5
- child	26	Table E-5
- teen	42	Table E-5
- adult	64	Table E-5
$U^s)_a$ (kg/yr) - infant	0	Table E-5
- child	520	Table E-5
- teen	630	Table E-5
- adult	520	Table E-5
t_L (seconds)	8.6E4 (1 day)	Table E-15
t_h (seconds)	5.18E6 (60 days)	Table E-15
Y_v (kg/m^2)	2.0	Table E-15

APPENDIX D

DIAGRAMS OF LIQUID AND GASEOUS TREATMENT SYSTEMS AND MONITORING SYSTEMS

Liquid Radwaste Treatment System Diagrams

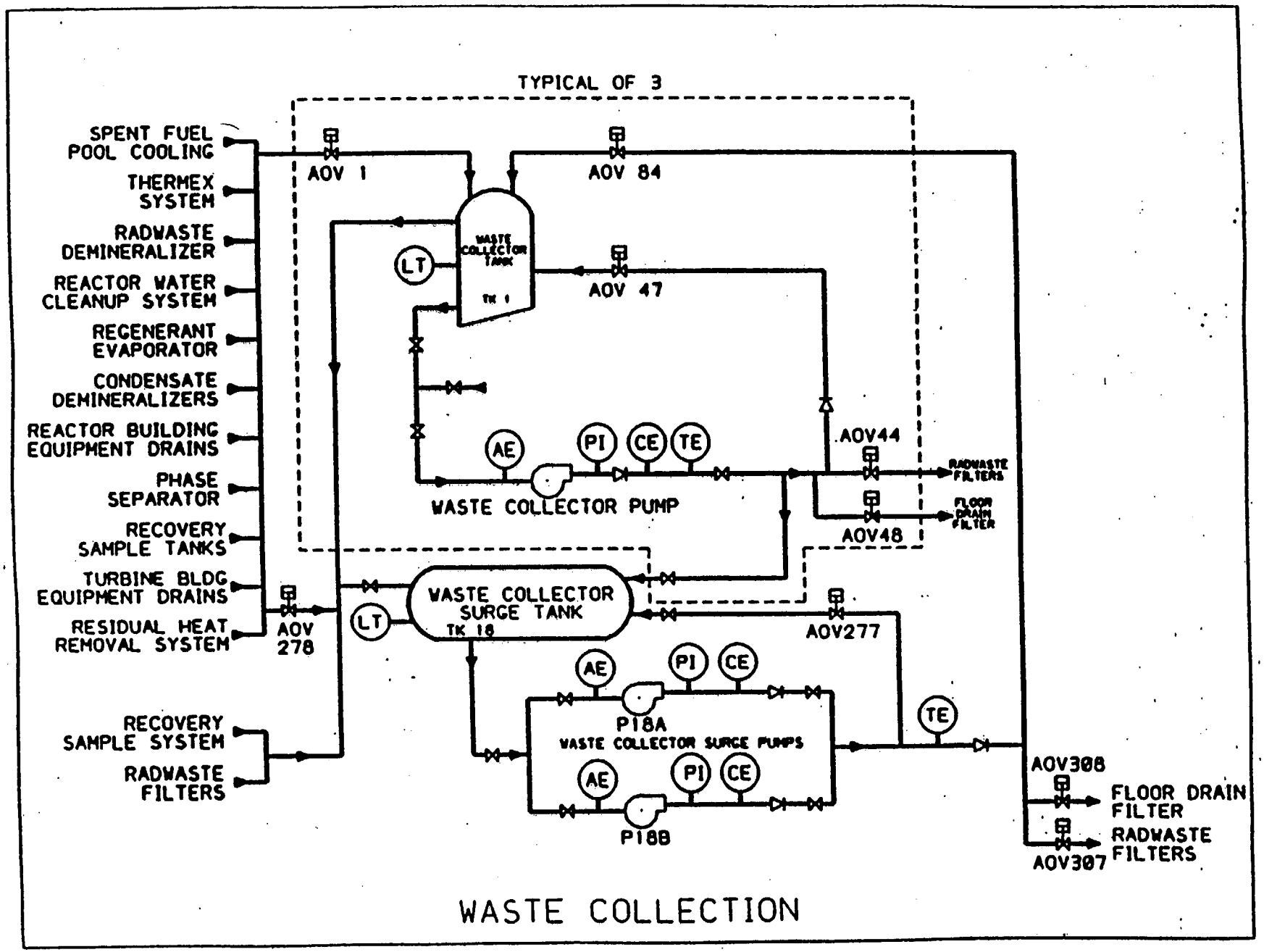
TYPICAL OF 3
SPENT FUEL POOL COOLING
THERMEX SYSTEM
RADWASTE DEMINERALIZER
REACTOR WATER CLEANUP SYSTEM
REGENERANT EVAPORATOR
CONDENSATE DEMINERALIZERS
REACTOR BUILDING EQUIPMENT DRAINS
PHASE SEPARATOR
RECOVERY SAMPLE TANKS
TURBINE BLDG EQUIPMENT DRAINS
RESIDUAL HEAT REMOVAL SYSTEM
RECOVERY SAMPLE SYSTEM
RADWASTE FILTERS
AOV 1
AOV 84
AOV 47
AOV44
AOV48
AOV 278
AOV277
AOV308
AOV307
WASTE COLLECTOR TANK
TK 1
LT
AE
PI
CE
TE
WASTE COLLECTOR PUMP
WASTE COLLECTOR SURGE TANK
TK 18
P18A
WASTE COLLECTOR SURGE PUMPS
P18B
RADWASTE FILTERS
FLOOR DRAIN FILTER
FLOOR DRAIN FILTER
RADWASTE FILTERS
WASTE COLLECTION

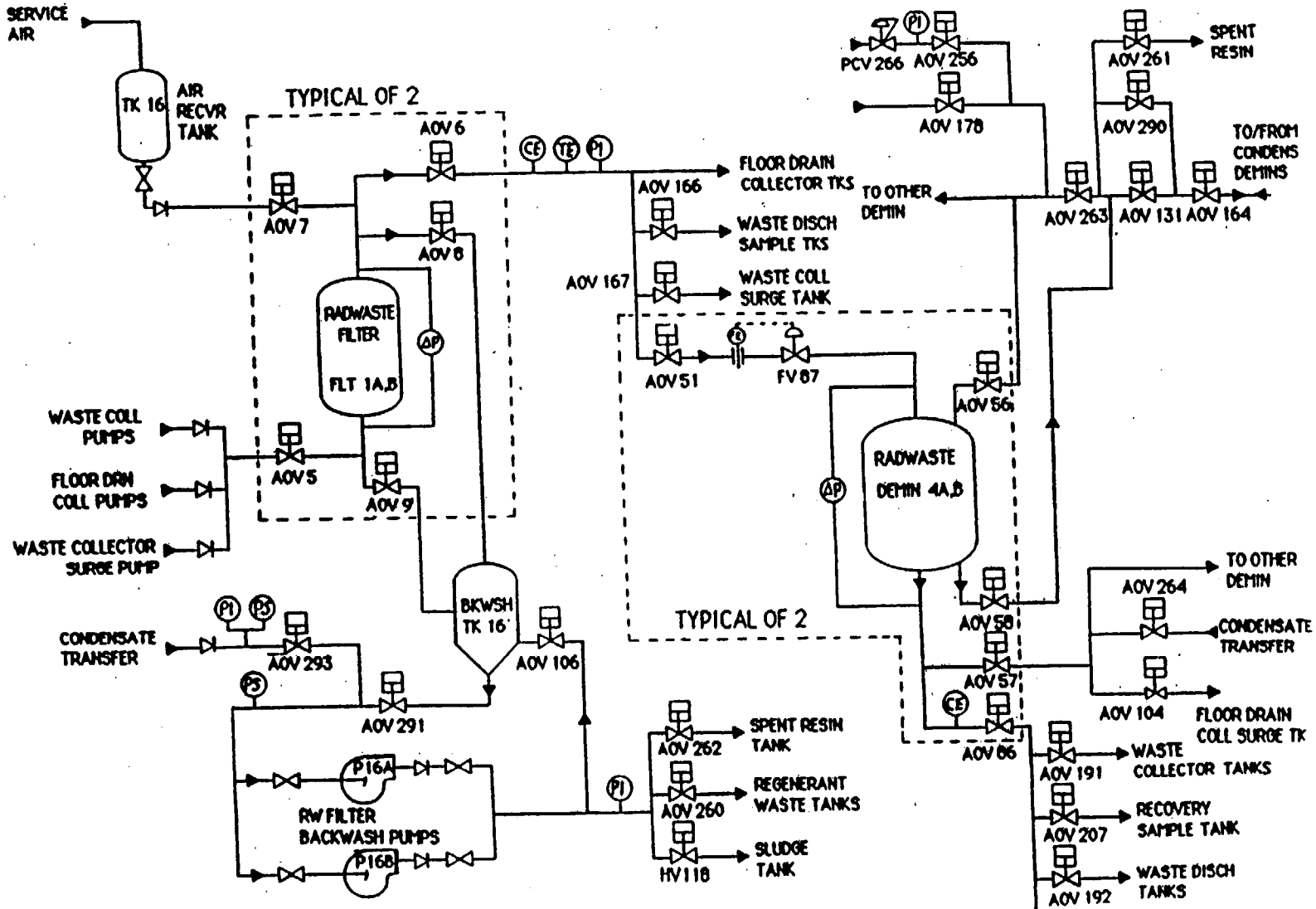

WASTE COLLECTOR TREATMENT SYSTEM

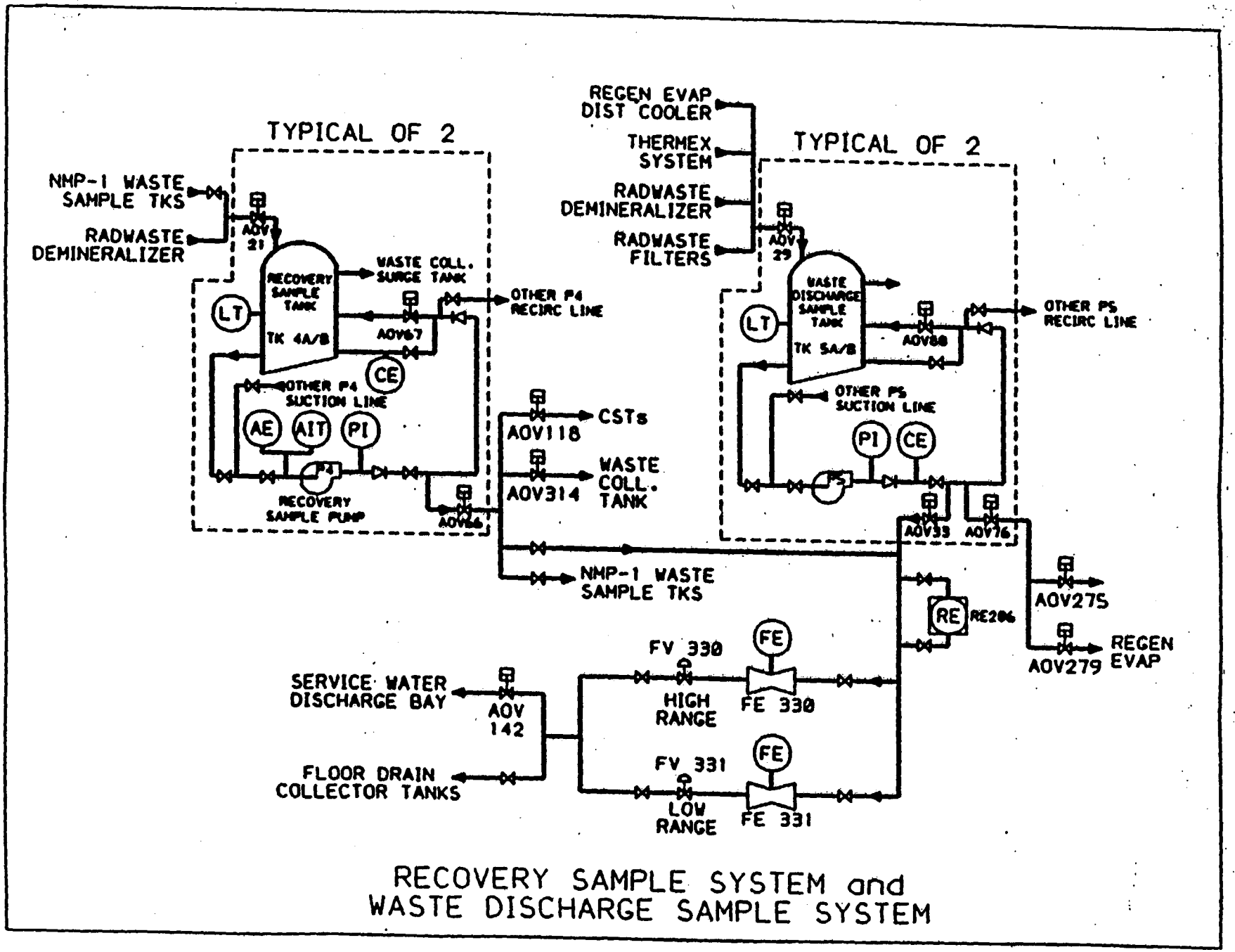

RECOVERY SAMPLE SYSTEM and
WASTE DISCHARGE SAMPLE SYSTEM

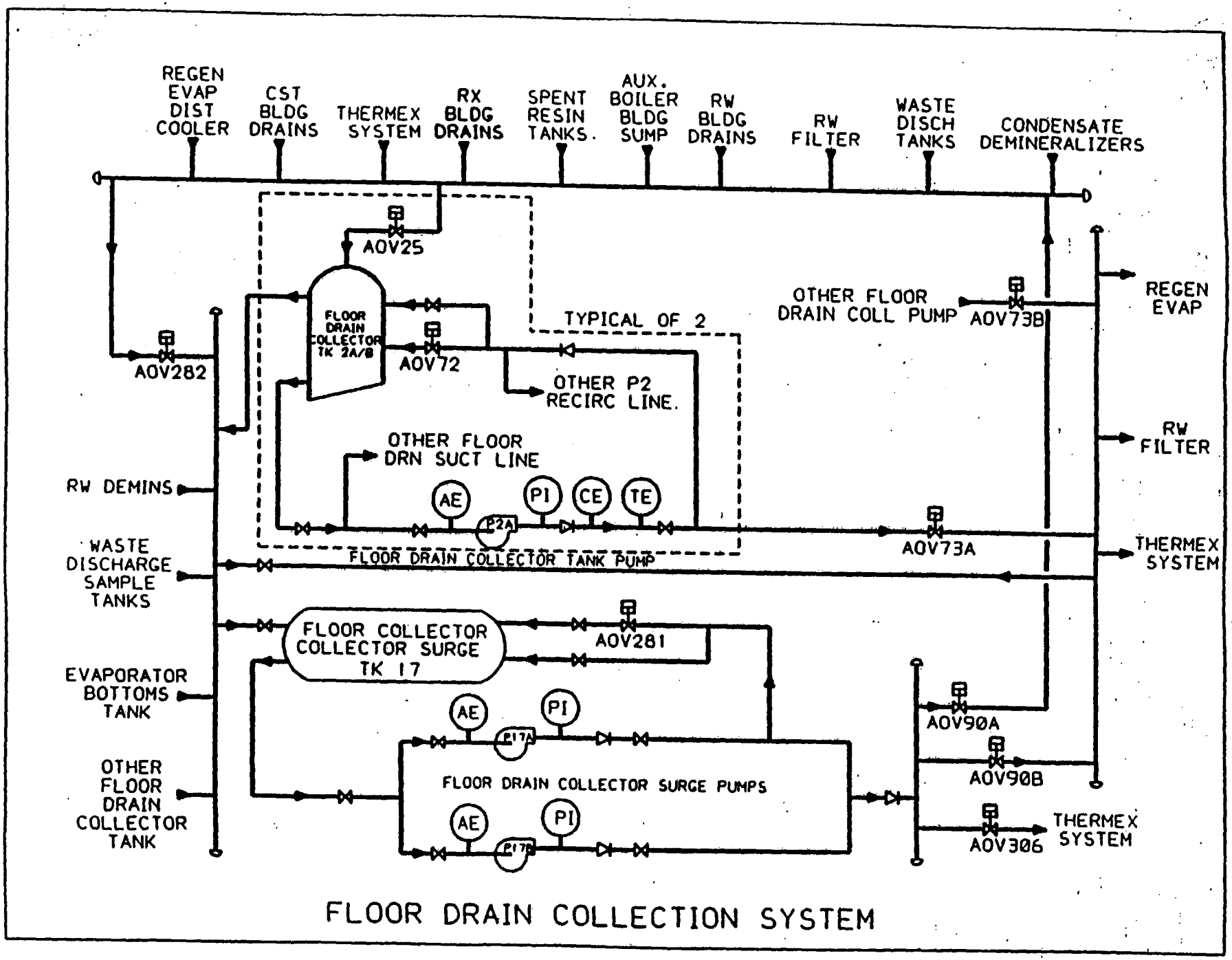

FLOOR DRAIN COLLECTION SYSTEM

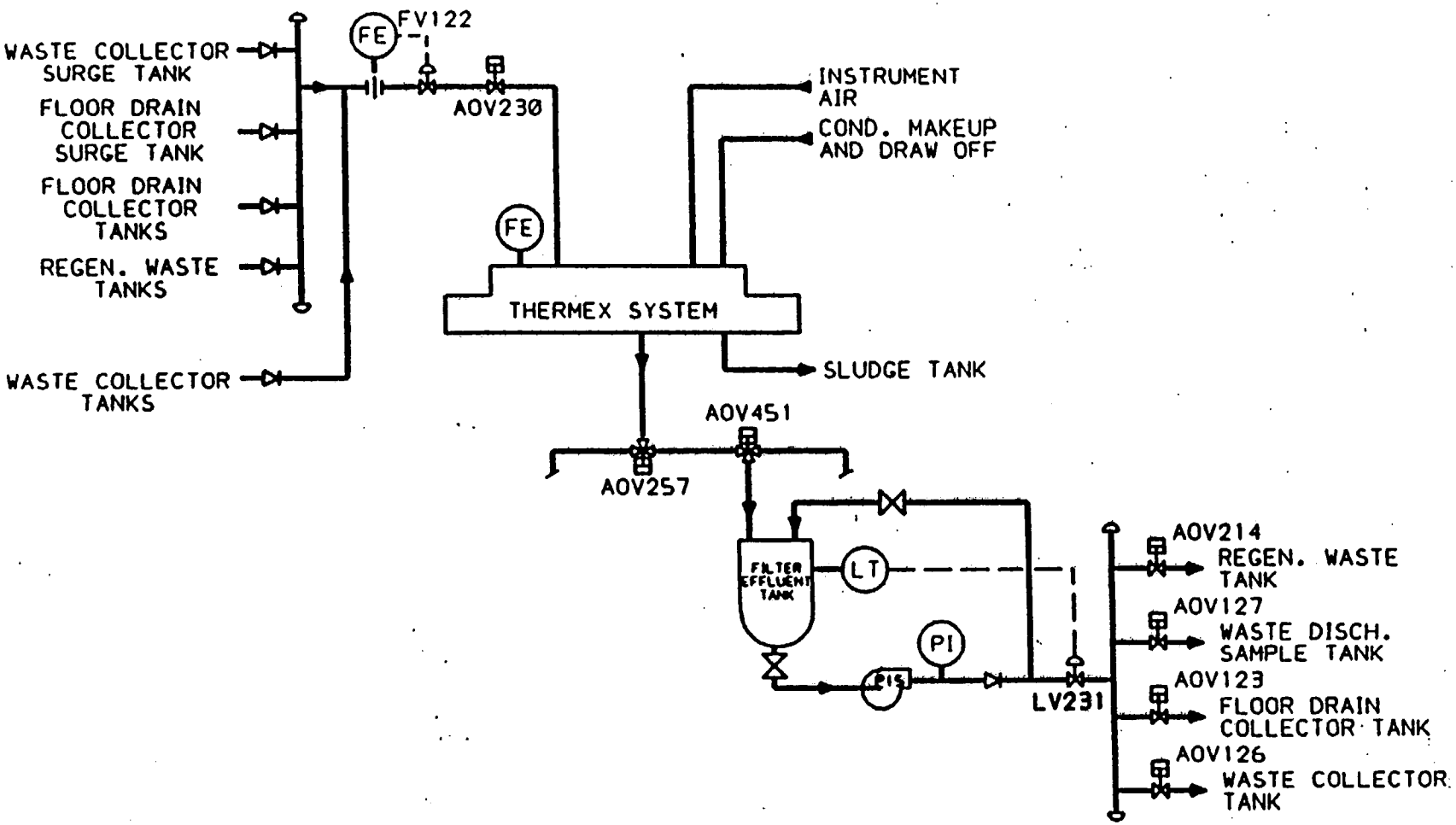

FLOOR DRAIN FILTER SYSTEM

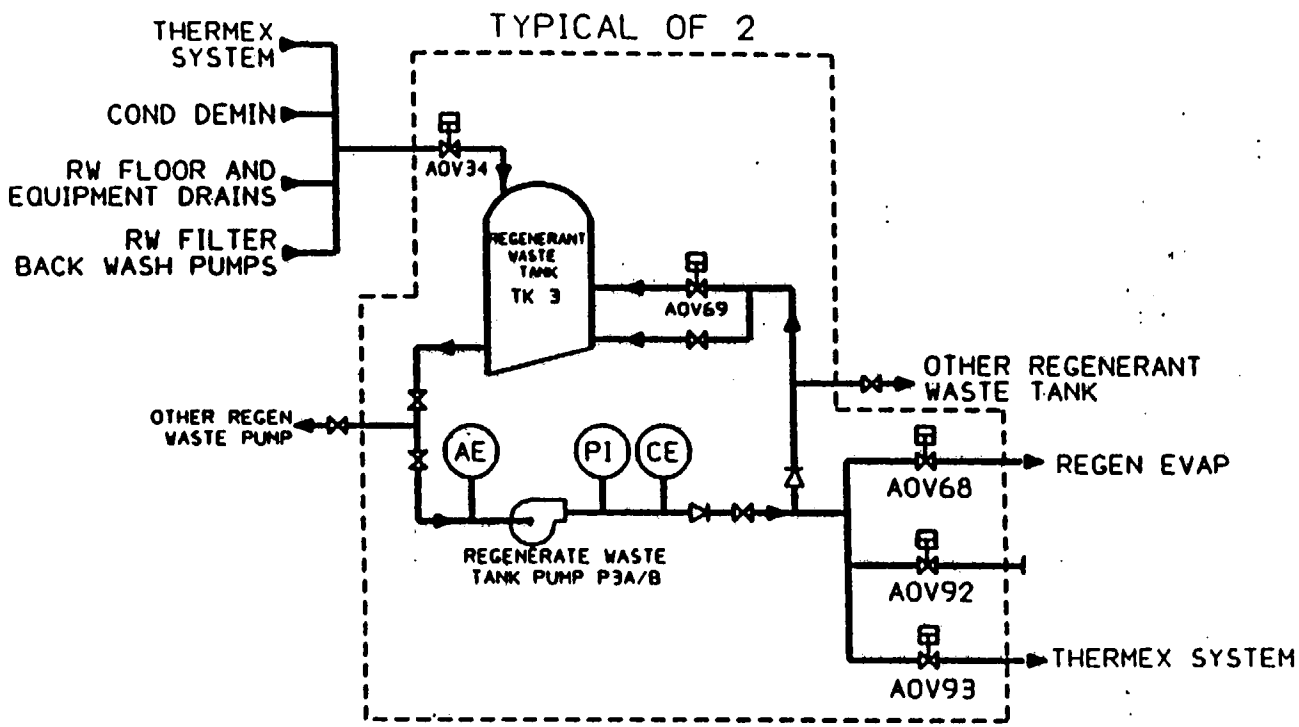

REGENERANT WASTE SYSTEM

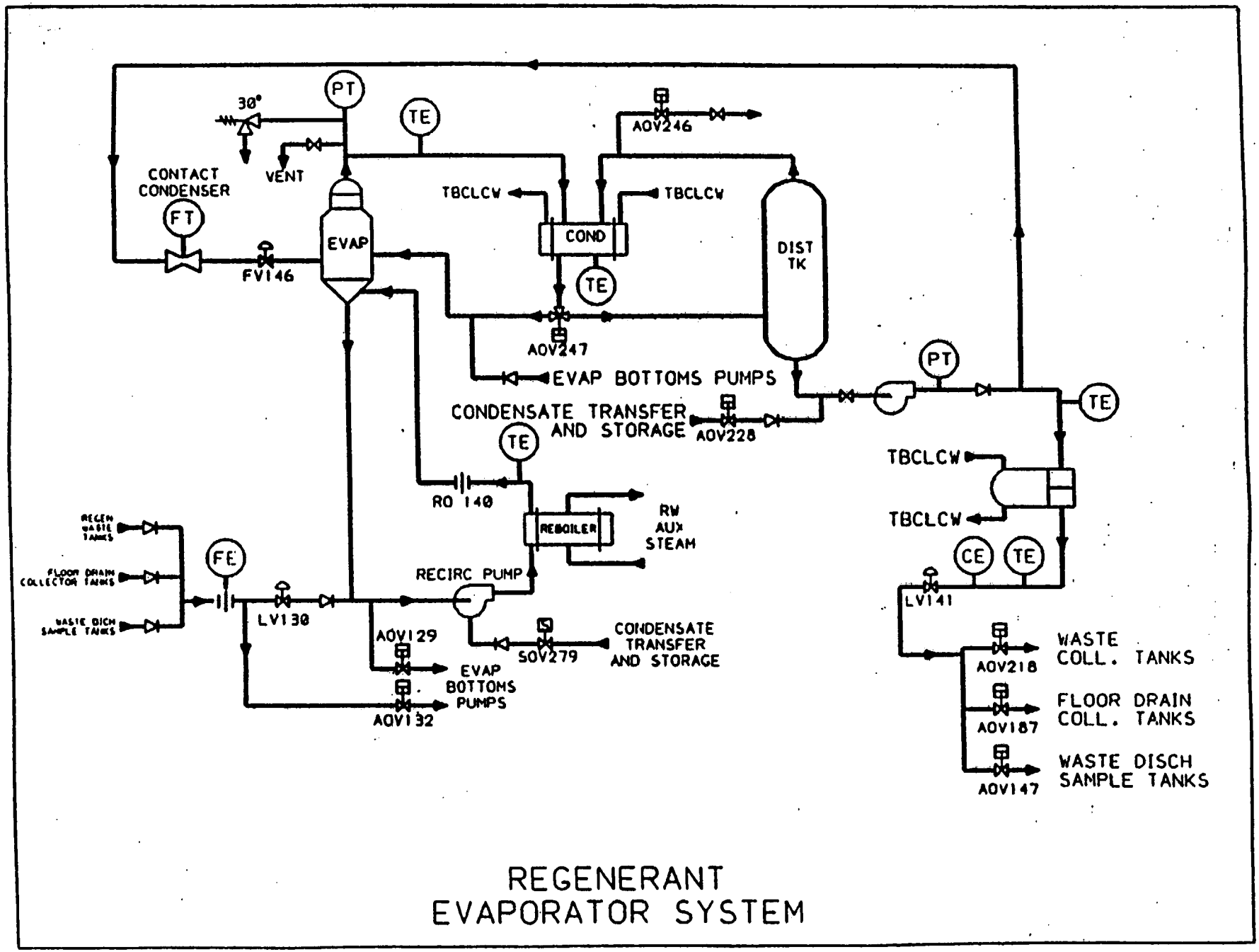

REGENERANT
EVAPORATOR SYSTEM

Gaseous Treatment System Diagrams

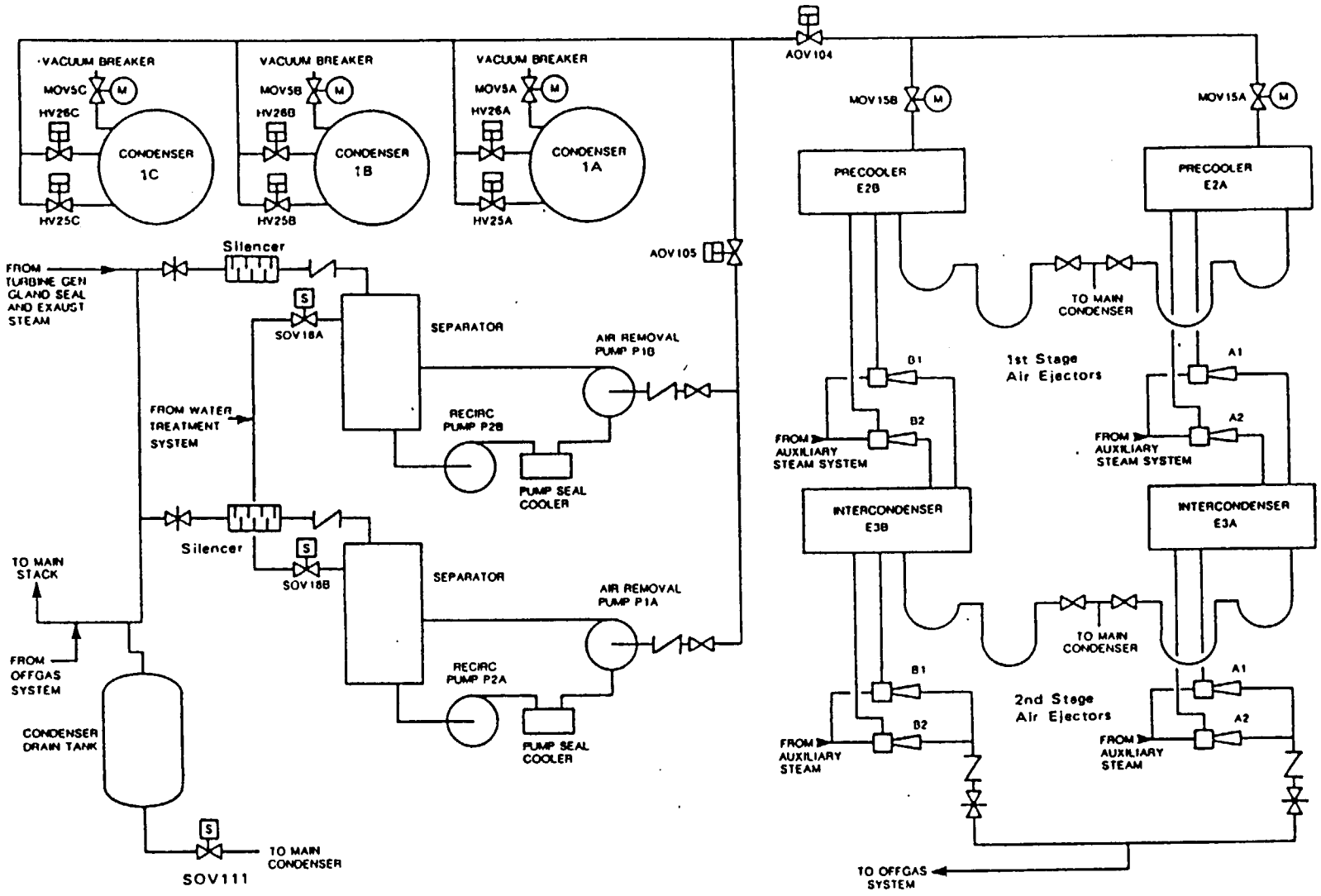

Title: CONDENSER AIR REMOVAL SYSTEM

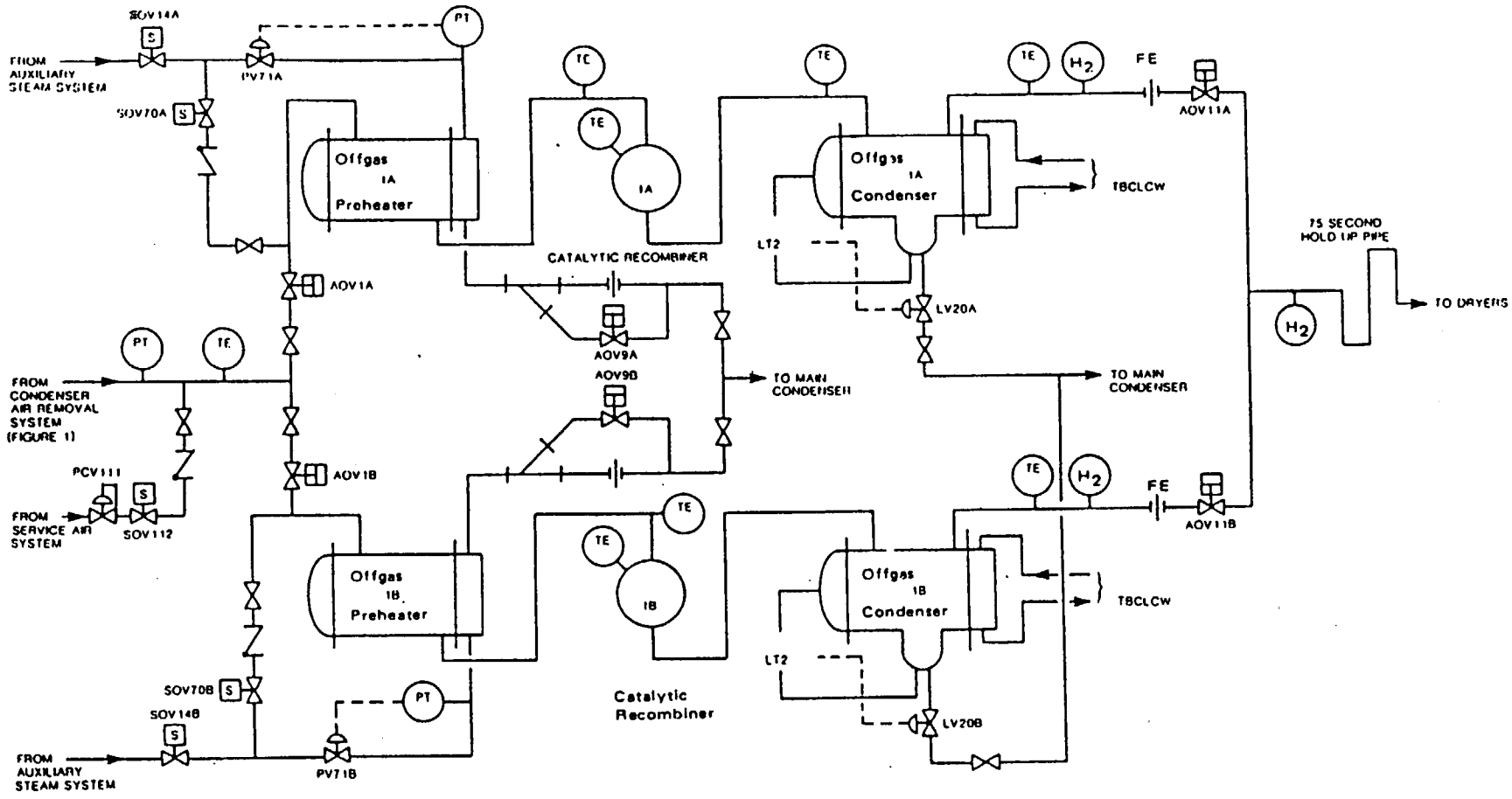

Title:
OFFGAS RECOMBINERS

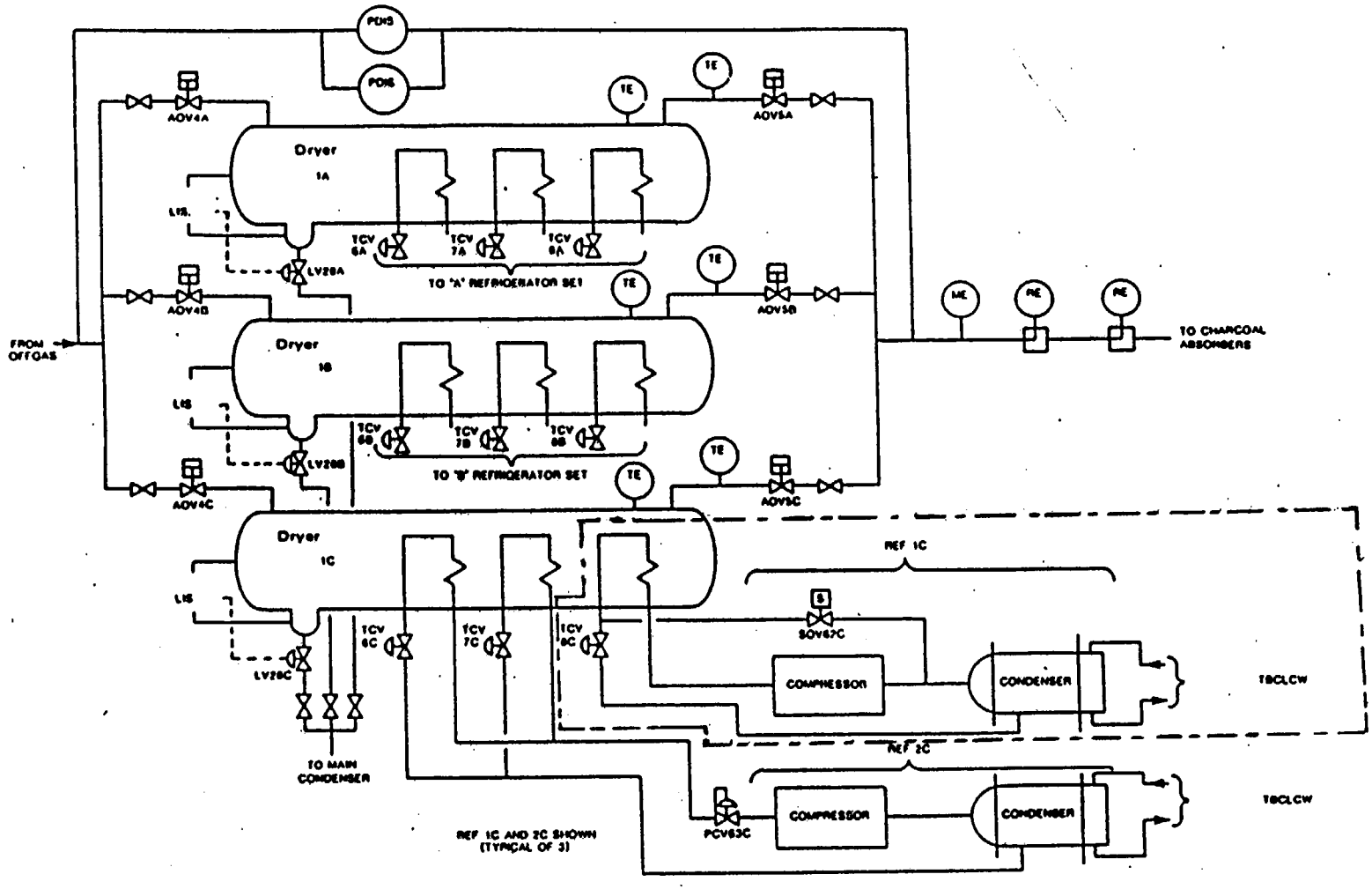

ALL LINES AND EQUIPMENT
LOCATED INSIDE THIS BOUNDARY
TO BE ABANDONED IN PLACE

Title:
OFFGAS DRYERS

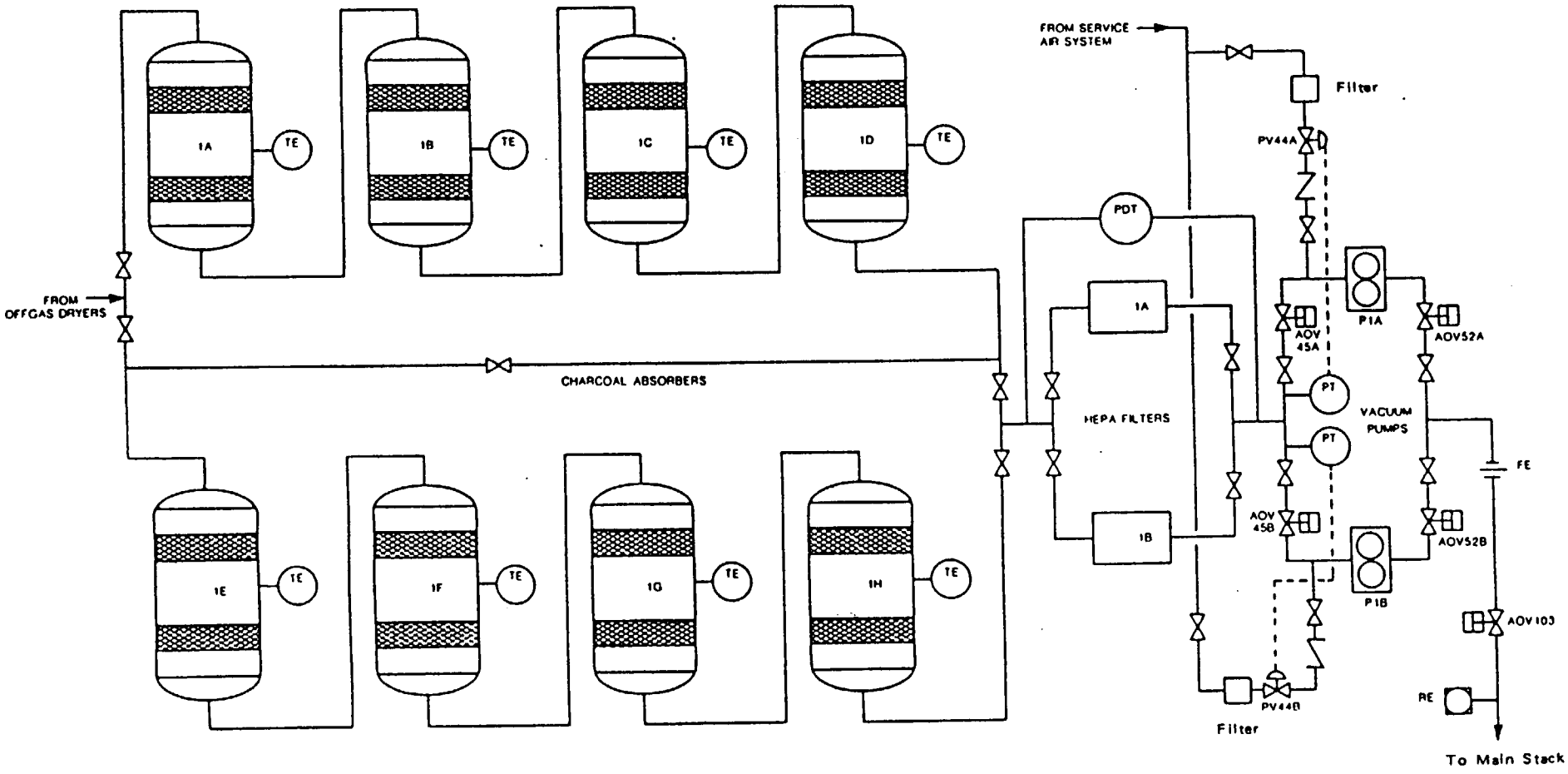

Title: OFFGAS SYSTEM CHARCOAL ABSORBERS

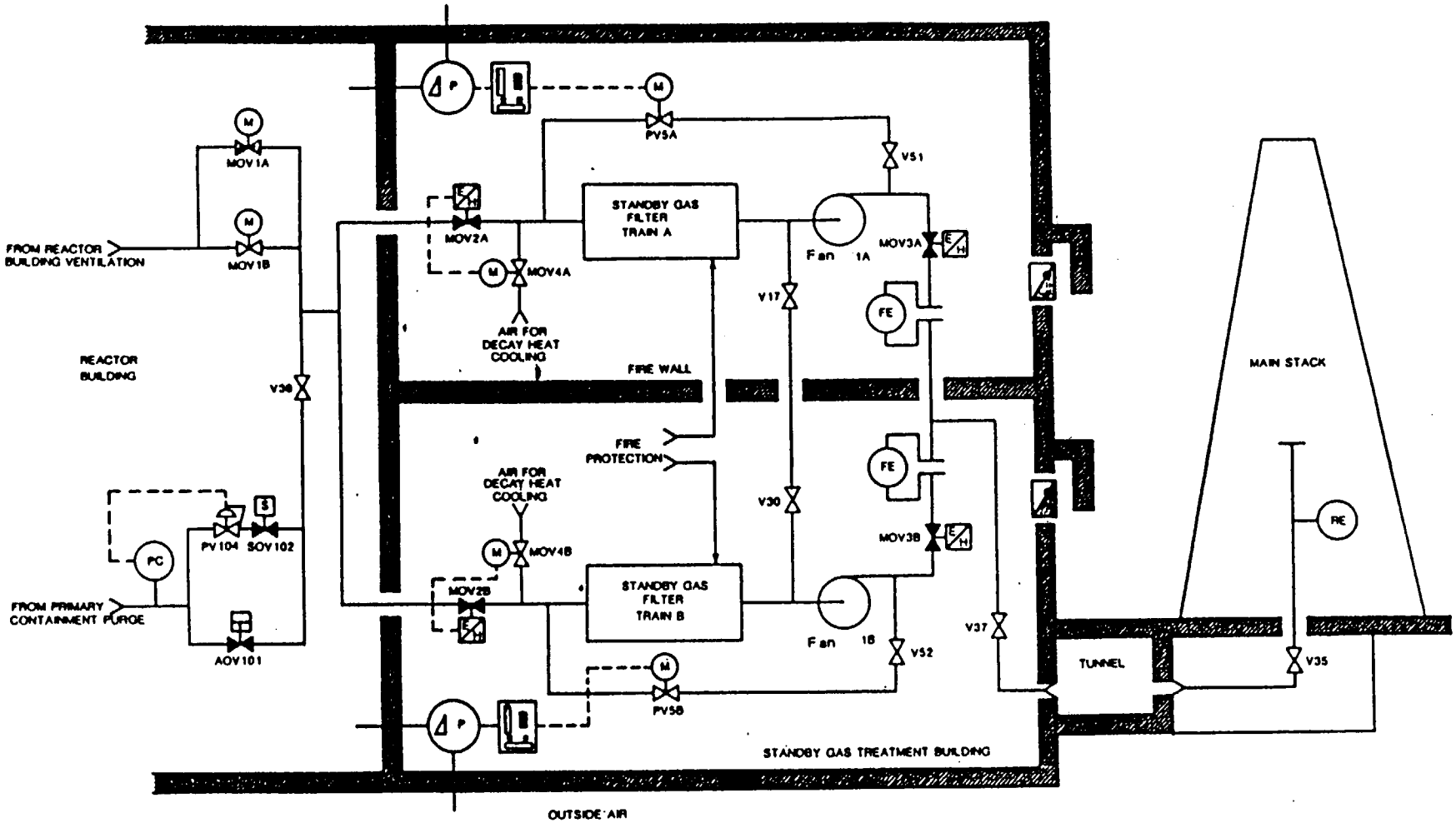

Title: STANDBY GAS TREATMENT SYSTEM

Liquid Radiation Monitoring Diagrams

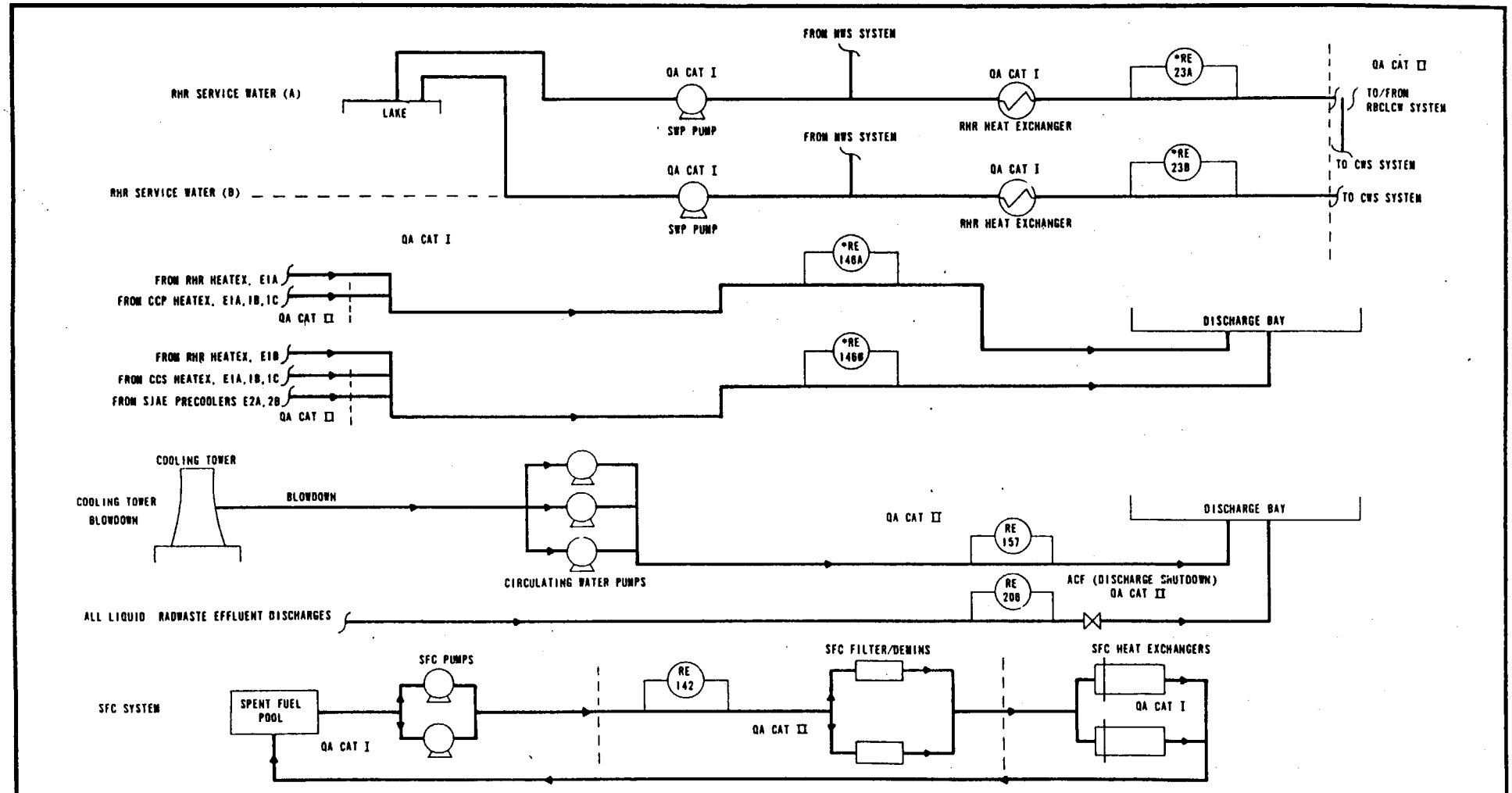

LIQUID RADIATION MONITORING
SHEET 2 OF 2

NIAGARA MOHAWK POWER CORPORATION
NINE MILE POINT-UNIT 2
FINAL SAFETY ANALYSIS REPORT

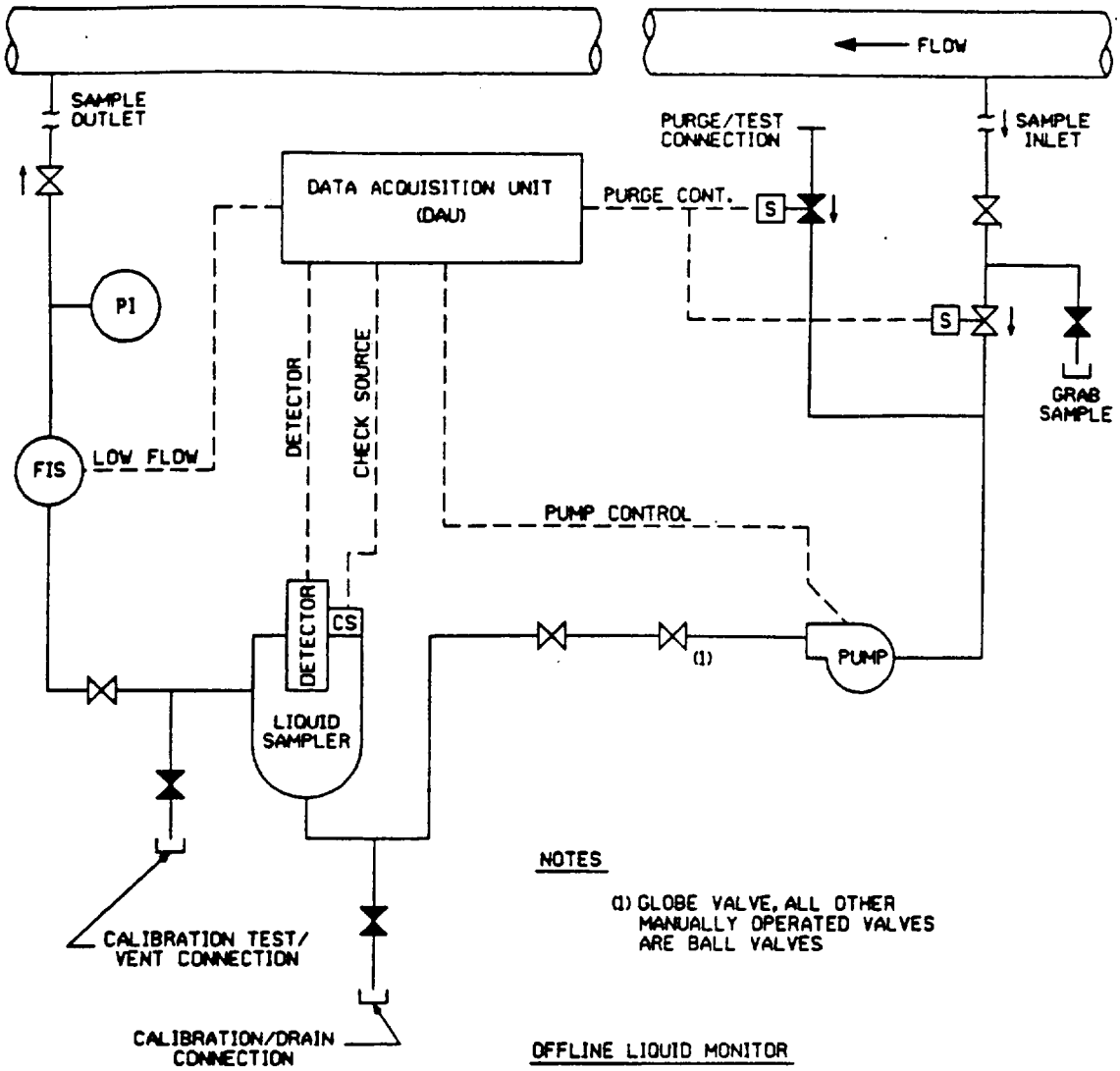

NOTES

(1) GLOBE VALVE, ALL OTHER MANUALLY OPERATED VALVES ARE BALL VALVES

OFFLINE LIQUID MONITOR

2CCP-CAB115
2CCS-CAB152
2CWS-CAB157

LEGEND

PI — PRESSURE INDICATOR

FIS — FLOW INDICATING SW.

S — SOLENOID OPERATED SW.

NORMALLY CLOSED VALVE

NORMALLY OPEN VALVE

OFF-LINE LIQUID MONITOR

NIAGARA MOHAWK POWER CORPORATION
NINE MILE POINT-UNIT 2
UPDATED SAFETY ANALYSIS REPORT

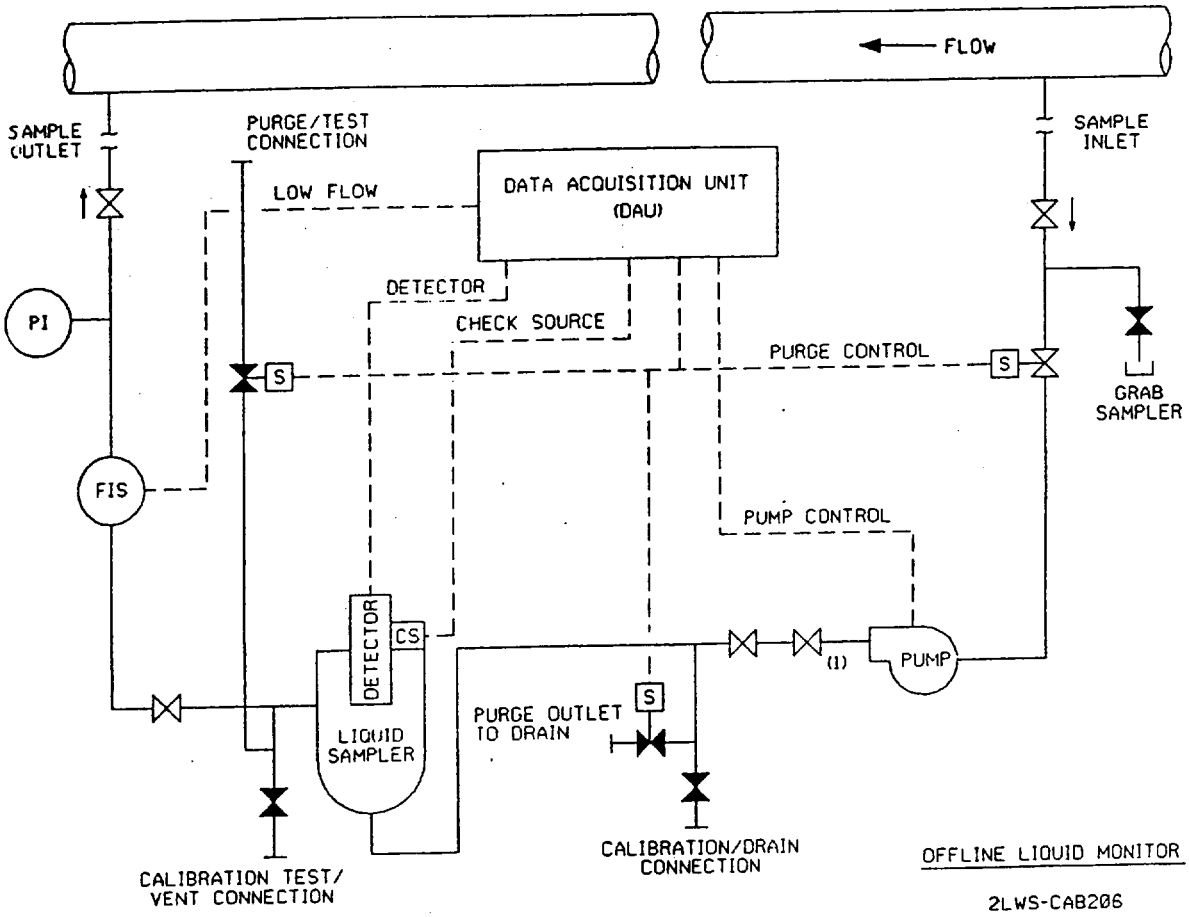

LEGEND

- PI — PRESSURE INDICATOR
- FIS — FLOW INDICATING SW.
- S — SOLENOID OPERATED SW.
- NORMALLY CLOSED VALVE
- NORMALLY OPEN VALVE

NOTES

(1) GLOBE VALVE, ALL OTHER MANUALLY OPERATED VALVES ARE BALL VALVES

OFF-LINE LIQUID MONITOR

NIAGARA MOHAWK POWER CORPORATION
NINE MILE POINT-UNIT 2
UPDATED SAFETY ANALYSIS REPORT

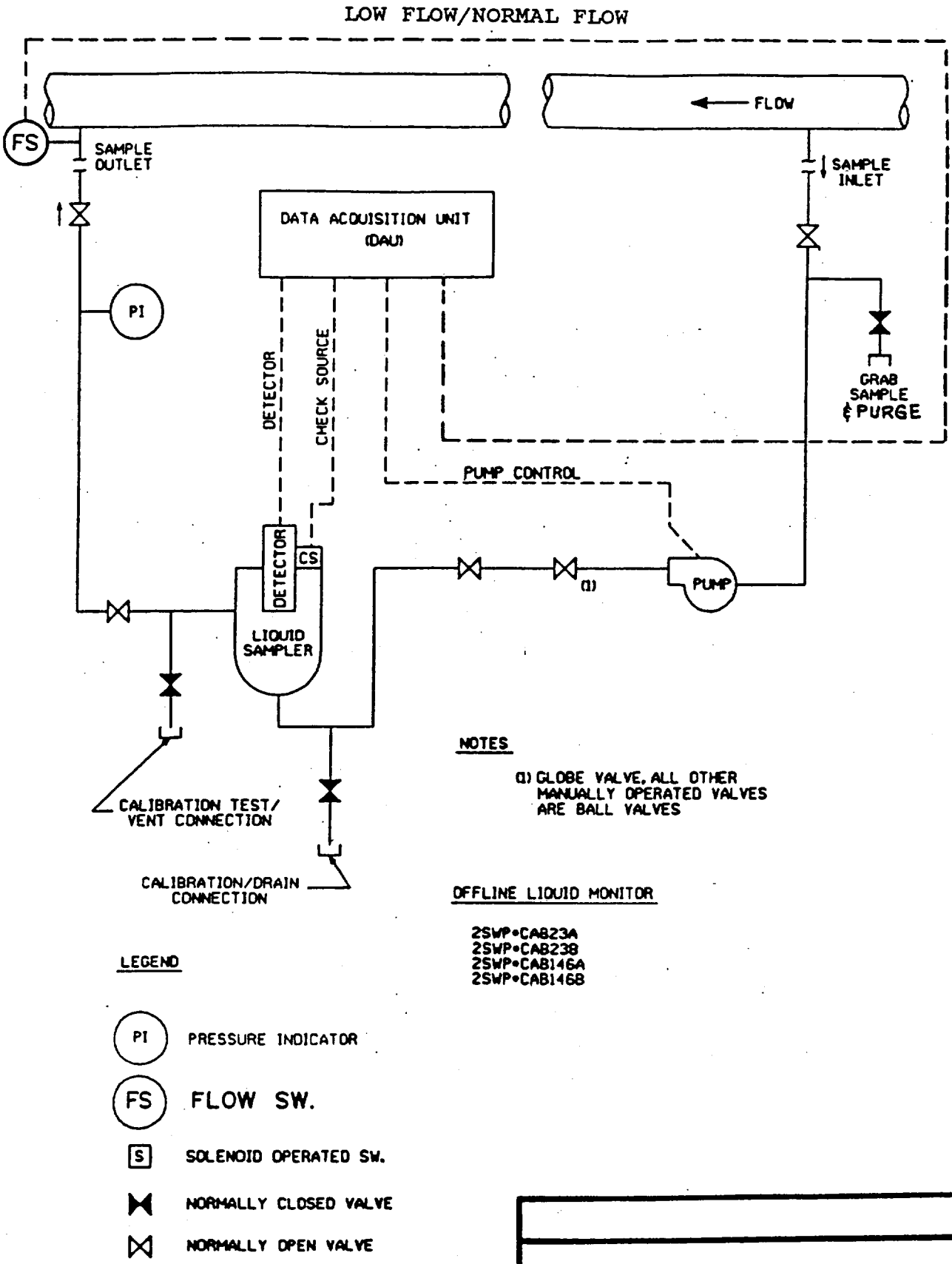

OFF-LINE LIQUID MONITOR

NIAGARA MOHAWK POWER CORPORATION
NINE MILE POINT-UNIT 2
UPDATED SAFETY ANALYSIS REPORT

Gaseous Effluent Monitoring System Diagrams

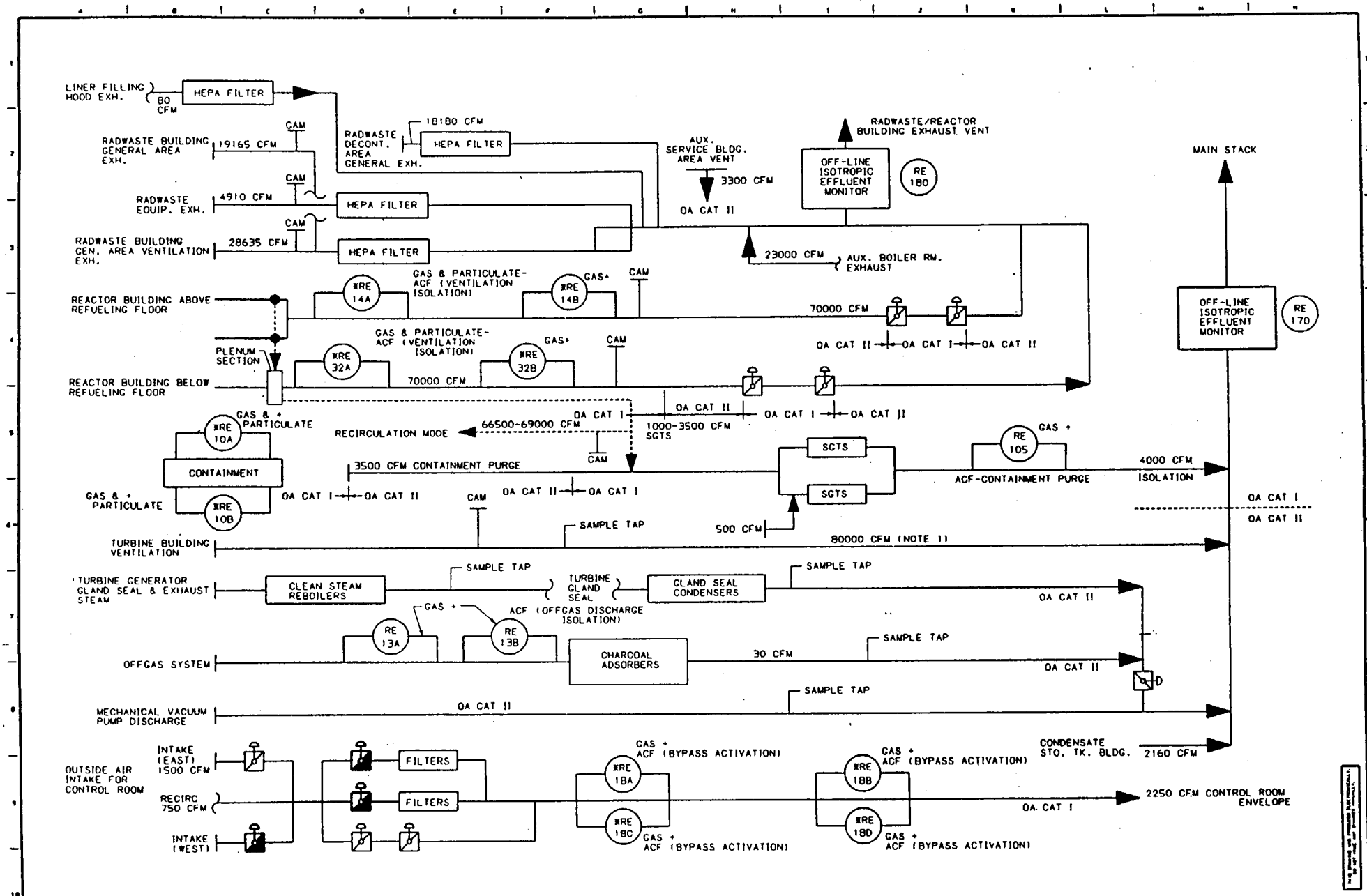

ACF: AUTOMATIC CONTROL FUNCTION
PAM: POST ACCIDENT MONITOR
+ : PARTICULATE & IODINE SAMPLING CAPABILITY
CAM: CONTINUOUS AIRBORNE MONITOR
* : SAFETY-RELATED MONITOR

NOTES.
1. MODIFICATION 95-011 HAS BEEN INSTALLED TO ALLOW CONCURRENT OPERATION OF ALL 3 EXHAUST FANS. WHEN ALL 3 FANS ARE RUNNING THERE WILL BE AN ADDITIONAL EXHAUST OF ≈ 17,500 CFM.

GASEOUS RADIATION MONITORING

NIAGARA MOHAWK POWER CORPORATION
NINE MILE POINT-UNIT 2
UPDATED SAFETY ANALYSIS REPORT

USAR REVISION 10 NOVEMBER 1998

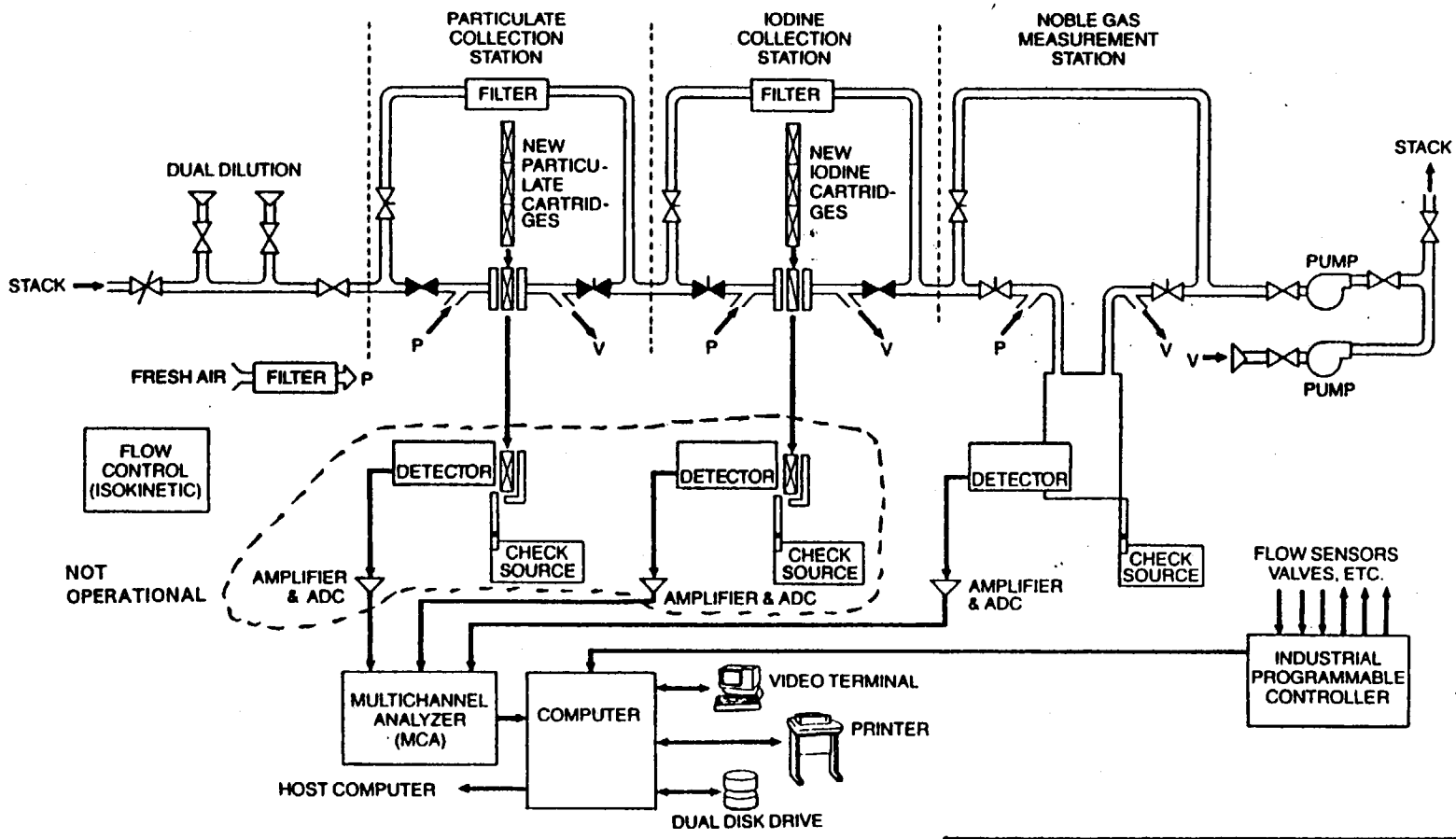

BLOCK DIAGRAM
TYPICAL GASEOUS EFFLUENT
MONITORING SYSTEM

NIAGARA MOHAWK POWER CORPORATION
NINE MILE POINT-UNIT 2
UPDATED SAFETY ANALYSIS REPORT

APPENDIX E
NINE MILE POINT ON-SITE AND OFF-SITE MAPS

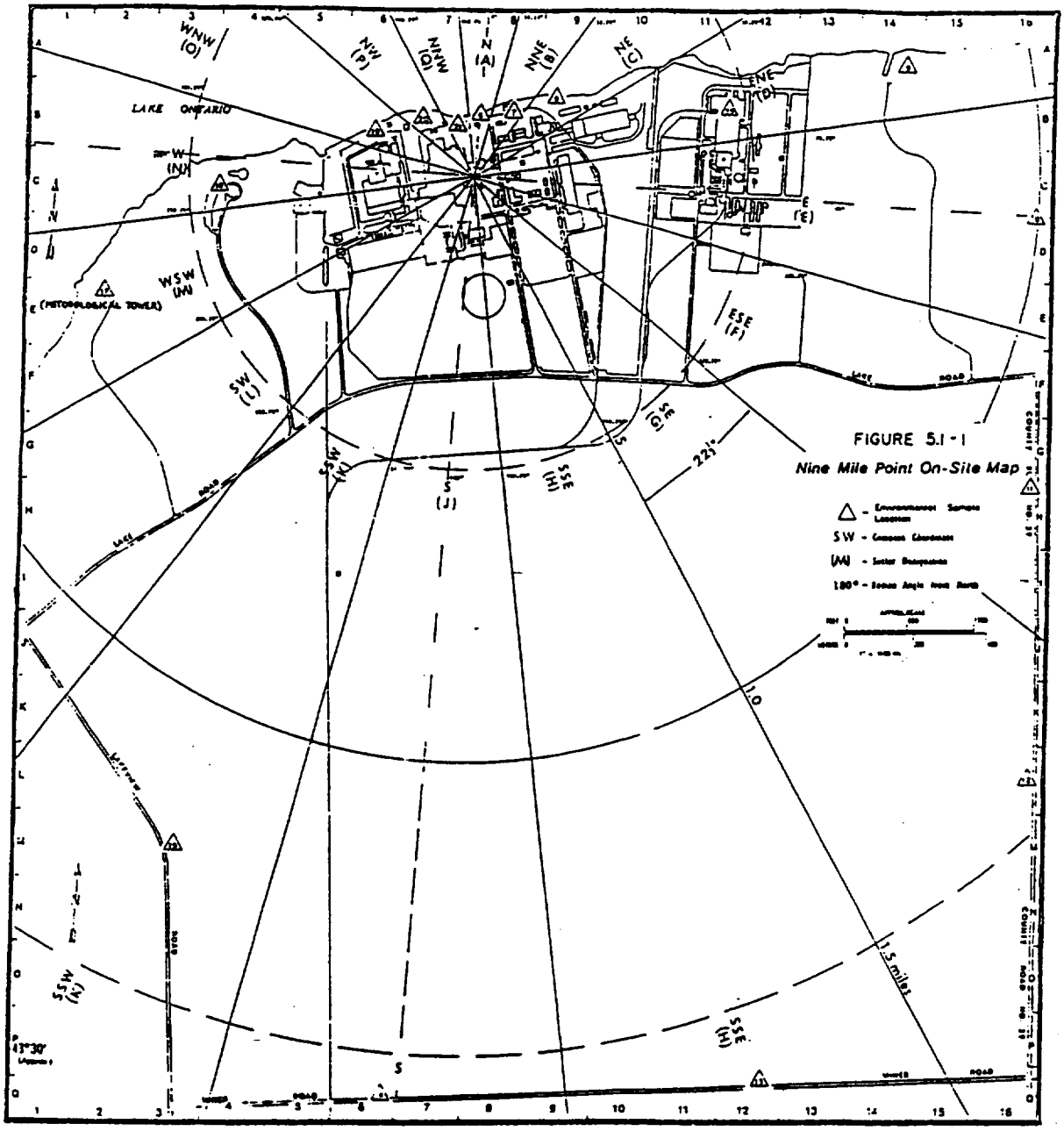
LAKE ONTARIO
WNW (O)
NW (P)
NNW (O)
N (A)
NNE (B)
NE (C)
ENE (D)
E (E)
ESE (F)
SE (G)
SSE (H)
S (J)
SSW (K)
SW (L)
WSW (M)
W (N)
(METEOROLOGICAL TOWER)
22½°
1.0
1.5 miles
43°30'
FIGURE 5.1-1
Nine Mile Point On-Site Map

FIGURE 5.1-2
NINE MILE POINT
OFF-SITE MAP
(12/95)

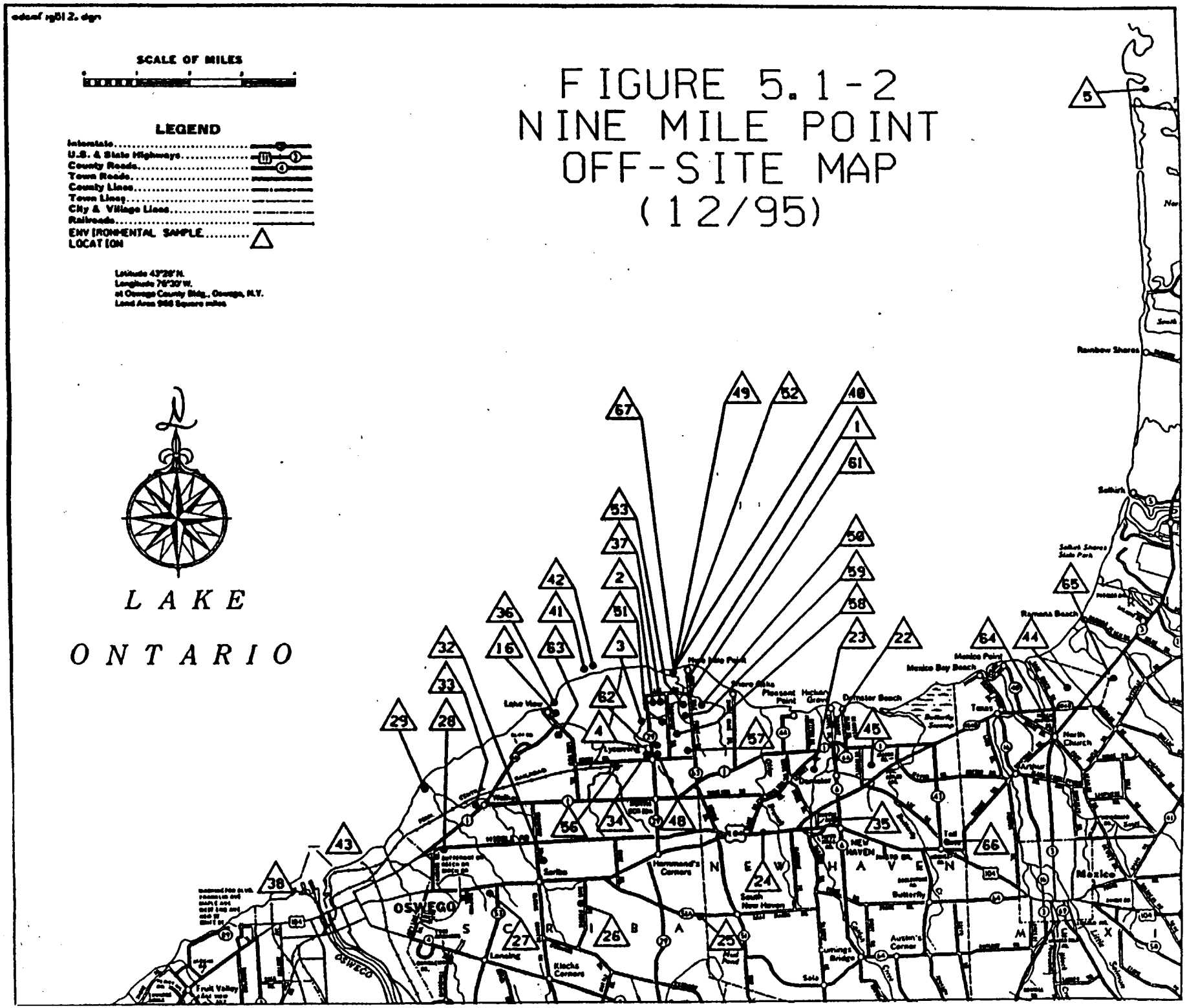

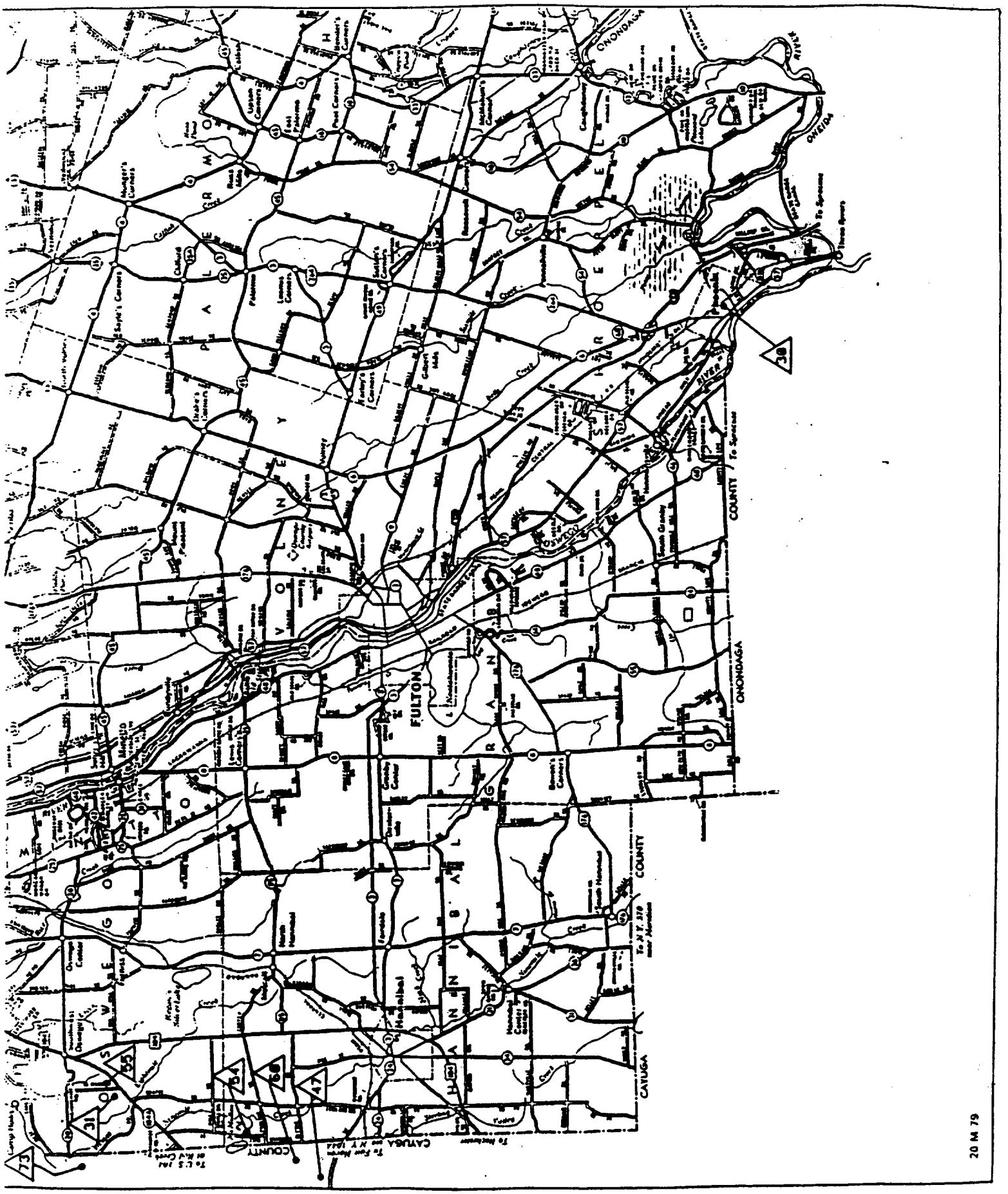
FULTON
ONONDAGA
ONEIDA
CATUGA
COUNTY
OSWEGO
20 M 79