72-1004

TRANSNUCLEAR WEST

February 23, 2001
NUH03-01-1681
RMG-01-010

Mr. Timothy Kobetz
Spent Fuel Project Office, NMSS
U. S. Nuclear Regulatory Commission
11555 Rockville Pike M/S 0-6-F-18
Rockville, MD 20852

Subject: Application for Amendment No. 4 of NUHOMS® Certificate of Compliance (CoC) No. 1004 for Dry Spent Fuel Storage Casks, Revision 0

Dear Mr. Kobetz:

Transnuclear West Inc. herewith submits Revision 0 of its Application for Amendment No. 4 of NUHOMS® CoC No. 1004. This application requests approval to (a) authorize storage of PWR fuel assemblies with or without Burnable Poison Rod Assemblies (BPRAs) which have an equivalent unirradiated enrichment of greater than 1.45 wt. % U-235 in NUHOMS®-24P DSC and (b) increase the maximum PWR fuel assembly length with BPRAs currently authorized by 0.25 inch for fuel which meets specified parameters.

While Duke Energy Corporation (Duke) has the current need for the amendment proposed herein for its Oconee Nuclear Station, the proposed changes are applicable to any general licensee.

This submittal is organized in the following format to facilitate your staff's review:

Attachment A: Description, Justification and Evaluation of Amendment Changes
Attachment B: Suggested Changes to Certificate of Compliance
Attachment C: Changed FSAR Pages

TN West has assessed the proposed changes and determined that there is no safety significance as discussed in Attachment A of this submittal.

NRC approval of this submittal is requested by July 30, 2001 to support Duke's loading schedule for Oconee. Should you or your staff require additional information to support

Transnuclear West Inc.
39300 Civic Center Drive, Suite 280, Fremont, CA 94538
Phone: 510-795-9800 • Fax: 510-744-6002

NMSS01 Public

review of this application, please do not hesitate to contact Mr. U. B. Chopra (510-744-6053) or me (510-744-6020).

Sincerely,

Robert M. Grenier
President and Chief Operating Officer

Docket 72-1004

Enclosure: Ten (10) copies of Application for Amendment No. 4 to COC 1004

ATTACHMENT A

Description, Justification and Evaluation of Amendment Changes

ATTACHMENT A

DESCRIPTION, JUSTIFICATION AND EVALUATION OF AMENDMENT CHANGES

1. INTRODUCTION

The purpose of this amendment application is to amend CoC 72-1004 Technical Specifications 1.2.1 and 1.2.15 to allow storage of PWR fuel assemblies (with or without BPRAs) which have an equivalent unirradiated enrichment of greater than 1.45 wt. % U-235 in NUHOMS®-24P DSC. In addition, Table 1-1a of Specification 1.2.1 is revised to specify a new unirradiated Maximum Assembly + BPRA Length of 171.93 inches for fuel with burnup ≤ 32,000 MWd/MTU.

This section of the application provides (1) a brief description of the change (2) justification for the change (3) and a safety evaluation for this change.

2. BRIEF DESCRIPTION OF THE CHANGE

2.1 Suggested Changes to NUHOMS COC 72-1004, Revision 2

- Revise the "Bases" section of Specification 1.2.1, "Fuel Specification", to delete the requirement that the authorized fuel assemblies for storage in NUHOMS® 24P DSC must have an equivalent unirradiated enrichment of less than or equal to 1.45 wt. % U-235.
- Revise "Physical Parameters (with BPRAs)" listed in Table 1-1a of Specification 1.2.1, to add a new Unirradiated Maximum Assembly + BPRA Length of 171.93 inches for fuel with burnup ≤ 32,000 MWd/MTU. Also, the current maximum Assembly + BPRA Length of 171.71 inches is limited to fuel with burnup in the range of > 32,000 MWd/MTU and ≤ 45,000 MWd/MTU.
- Revise Table 1-2a of Specification 1.2.1 to replace the existing note "Not acceptable per Figure 1.1" shown in the top shaded area of this table with a new note which states that "Minimum cooling time 5 years, and minimum 2350 ppm soluble boron required in the DSC cavity during loading or unloading". Modify Table 1-2a note associated with the fourth bullet as marked.
- Revise Table 1-2c of Specification 1.2.1 to replace the existing note "Not acceptable per Figure 1.1" shown in the top shaded area of this table with a new note which states that "Minimum cooling time 5 years, and minimum 2350 ppm soluble boron required in the DSC cavity during loading or unloading". Modify Table 1-2c note associated with the sixth bullet as marked.

- Revise Figure 1.1 to show that the fuel assemblies which exceed the equivalent enrichment parameter of 1.45 wt. % and were previously identified as "Not Qualified" are now "Qualified with 2350 ppm minimum soluble boron" in the DSC cavity during loading or unloading. Also revise the existing note on this Figure for previously "Qualified" fuel assemblies to say "Qualified with 2000 ppm minimum boron".
- Revise Technical Specification 1.2.15 to specify separate limits of 2000 ppm and 2350 ppm soluble boron concentration as marked.
- Revise the Objective and Bases of Technical Specification 1.2.15 to make it consistent with the proposed change.

2.2 Changes to NUHOMS® FSAR, Revision 5

The following changes to NUHOMS® FSAR Revision 5 are being implemented:

- Revise FSAR Tables 3.1-1 and 3.1-1a to specify a new unirradiated Maximum Assembly + BPRA Length of 171.93 inches for fuel with burnup ≤ 32,000 MWd/MTU. Also, the current maximum Assembly + BPRA Length of 171.71 inches is limited to fuel with burnup in the range of > 32,000 MWd/MTU and ≤ 45,000 MWd/MTU.
- Revise FSAR section 3.3.4.1 to provide cross reference to a new FSAR section 3.6 as discussed in the next paragraph. In addition, this section is revised to clarify that the current licensing basis of 2000 ppm soluble boron is applicable to fuel assemblies with equivalent unirradiated enrichment of less than or equal to 1.45 wt. % U-235.
- Add a new FSAR section 3.6 which addresses the safety analysis of storage of PWR fuel assemblies which exceed the existing equivalent unirradiated enrichment of 1.45 wt. % U-235. A description of the model and methodology used is provided. The results of criticality analysis show that a minimum boron concentration of 2350 ppm maintains the system reactivity below 0.95.
- Renumber existing FSAR Section 3.6 entitled "References" to section 3.7. Revise section 3.7 to reflect the new references which are discussed in the revised FSAR pages.
- Revise Figure 3.3-3 to show that the fuel assemblies which exceed the equivalent enrichment parameter of 1.45 wt. % and were previously identified as "Not Qualified" are now "Qualified with 2350 ppm minimum soluble boron" in the DSC cavity during loading or unloading. Also revise the existing note on this Figure for previously "Qualified" fuel assemblies to say "Qualified with 2000 ppm minimum boron".
- Revise FSAR section J.4.4 (FSAR Appendix J) to provide an analysis of the allowable irradiation growth for a B&W 15x15 fuel assembly (with BPRAs) which is 0.25 inch longer than the existing limiting length of 171.71 inch and the corresponding maximum burnup value which can be qualified for storage in a 24P long cavity DSC.

3. JUSTIFICATION OF CHANGE

Duke Energy Corporation (Duke) uses the NUHOMS® -24P system at the Oconee Nuclear Station. Inventories in both of the Oconee spent fuel pools currently exceed the level Duke considers prudent for refueling activities. Duke has planned dry storage loading campaigns to reduce these excessive inventories.

Currently, Duke's most urgent need is to load 144 fuel assemblies located in the Oconee Unit 3 spent fuel pool into 6 DSCs for dry storage during summer 2001. Fuel assemblies in one of these DSCs will exceed the equivalent unirradiated enrichment parameter of 1.45 wt. % U-235 and thus do not currently qualify for storage into NUHOMS® -24P DSC.

Finally, some of these fuel assemblies with BPRAs to be stored in 24P long cavity DSC have an unirradiated length that is 0.25 inch longer than the value currently specified in Fuel Specification Table 1-1a and thus do not qualify for storage into NUHOMS® -24P DSC.

The changes requested herein would allow Duke to remove a total of 131 such fuel assemblies which do not currently qualify for dry storage from its Oconee Unit 3 spent fuel pool, such that prudent inventories can be re-established.

While Duke has the current need for the amendment proposed herein, the proposed changes are applicable to any general licensee.

4. EVALUATION OF CHANGE

TN West has evaluated the proposed change and has concluded that it has no significant effect on safety.

- Revised SAR pages (included with Attachment C of this submittal) provide a complete evaluation of the proposed change.

ATTACHMENT B

Certificate of Compliance Suggested Changed Pages

(Revisions indicated relative to NUHOMS CoC 1004, Revision 2)

- Section 1.2.1 (Entire Section)
- Section 1.2.15 (Entire Section)

1.2.1 Fuel Specifications

Limit/Specification:	The characteristics of the spent fuel which is allowed to be stored in the standardized NUHOMS® system are limited by those included in Tables 1-1a and 1-1b.
Applicability:	The specification is applicable to all fuel to be stored in the standardized NUHOMS® system.
Objective:	The specification is prepared to ensure that the peak fuel rod cladding temperatures, maximum surface doses, and nuclear criticality effective neutron multiplication factor are below the design limits. Furthermore, the fuel weight and type ensures that structural conditions in the SAR bound those of the actual fuel being stored.
Action:	Each spent fuel assembly to be loaded into a DSC shall have the parameters listed in Tables 1-1a and 1-1b verified and documented. Fuel not meeting this specification shall not be stored in the standardized NUHOMS® system.
Surveillance:	Immediately, before insertion of a spent fuel assembly into a DSC, the identity of each fuel assembly shall be independently verified and documented.
Bases:	The specification is based on consideration of the design basis parameters included in the SAR and limitations imposed as a result of the staff review. Such parameters stem from the type of fuel analyzed, structural limitations, criteria for criticality safety, criteria for heat removal, and criteria for radiological protection. The standardized NUHOMS® system is designed for dry, horizontal storage of irradiated light water reactor (LWR) fuel. The principal design parameters of the fuel to be stored can accommodate standard PWR fuel designs manufactured by Babcock and Wilcox (B&W), Combustion Engineering, and Westinghouse, and standard BWR fuel manufactured by General Electric. The system is limited for use to these standard designs and to equivalent designs by other manufacturers as listed in Chapter 3 of the SAR. The analyses presented in the SAR are based on non-consolidated, zircaloy-clad fuel with no known or suspected gross breaches. The physical parameters that define the mechanical and structural design of the HSM and DSC are the fuel assembly dimensions and weight. The calculated stresses given in the SAR are based on the physical parameters given in Tables 1-1a and 1-1b and represent the upper bound. The design basis fuel assemblies for nuclear criticality safety are Babcock and Wilcox 15x15 fuel assemblies and General Electric 7x7 fuel assemblies for the standardized NUHOMS®-24P and NUHOMS®-52B designs, respectively. The NUHOMS®-24P Long Cavity DSC is designed for use with standard Burnable Poison Rod Assembly (BPRA) designs for the B&W 15x15 and Westinghouse 17x17 fuel types as listed in Appendix J of the SAR.

The design basis PWR BPRA for shielding source terms and thermal decay heat load is the Westinghouse 17x17 Pyrex Burnable Absorber, while the DSC internal pressure analysis is limited by B&W 15x15 BPRAs. In addition, BPRAs with cladding failures were determined to be acceptable for loading into NUHOMS®-24P Long Cavity DSC as evaluated in Appendix J of the SAR.

The NUHOMS®-24P is designed for unirradiated fuel with an initial fuel enrichment of up to 4.0 wt. % U-235, taking credit for soluble boron in the DSC cavity water during loading operations. Section 1.2.15 defines the requirements for boron concentration in the DSC cavity water for the NUHOMS®-24P design only. Figure 1.1 defines the required burnup as a function of initial enrichment. The NUHOMS®-52B is designed for unirradiated fuel with an initial enrichment of less than or equal to 4.0 wt. % U-235.

The thermal design criterion of the fuel to be stored is that the total maximum heat generation rate per assembly and BPRA be such that the fuel cladding temperature is maintained within established limits during normal and off-normal conditions. Fuel cladding temperature limits were established based on methodology in PNL-6189 and PNL-4835.

The radiological design criterion is that fuel stored in the NUHOMS® system must not increase the average calculated HSM or transfer cask surface dose rates beyond those calculated for a canister full of design basis fuel assemblies with or without BPRAs. The design value average HSM and cask surface dose rates were calculated to be 48.6 mrem/hr and 591.8 mrem/hr respectively based on storing twenty four (24) Babcock and Wilcox 15x15 PWR assemblies (without BPRAs) with 4.0 wt. % U-235 initial enrichment, irradiated to 40,000 MWd/MTU, and having a post irradiation time of five years. To account for BPRAs, the fuel assembly cooling required cooling times are increased to maintain the above dose rate limits.

Table 1-1a
PWR Fuel Specifications for Fuel to be Stored in the Standardized NUHOMS®-24P DSC

Title or Parameter	Specifications
Fuel	Only intact, unconsolidated PWR fuel assemblies (with or without BPRAs) with the following requirements
Physical Parameters (without BPRAs)	
Maximum Assembly Length (unirradiated)	165.75 in (standard cavity) 171.71 in (long cavity)
Maximum Assembly Width (unirradiated)	8.536 in
Maximum Assembly Weight	1682 lbs
No. of Assemblies per DSC	≤ 24 intact assemblies
Fuel Cladding	Zircalloy-clad fuel with no known or suspected gross cladding breaches
Physical Parameters (with BPRAs)	
Maximum Assembly + BPRA Length (unirradiated)	
With Burnup > 32,000 and ≤ 45,000 MWd/MTU	171.71 in (long cavity)
With Burnup ≤ 32,000 MWd/MTU	*171.96 in (long cavity)*
Maximum Assembly Width (unirradiated)	8.536 in
Maximum Assembly + BPRA Weight	1682 lbs
No. of Assemblies per DSC	≤ 24 intact assemblies
No. of BPRAs per DSC	≤ 24 BPRAs
Fuel Cladding	Zircalloy-clad fuel with no known or suspected gross cladding breaches
Nuclear Parameters	
Fuel Initial Enrichment	≤ 4.0 wt. % U-235
Fuel Burnup and Cooling Time	Per Table 1-2a (without BPRAs) or Per Table 1-2c (with BPRAs)
BPRA Cooling Time (Minimum)	5 years for B&W Designs 10 years for Westinghouse Designs
Alternate Nuclear Parameters	
Initial Enrichment	≤ 4.0 wt. % U-235
Burnup	≤ 40,000 MWd/MTU and Per Figure 1.1
Decay Heat (Fuel + BPRA)	≤ 1.0 kW per assembly
Neutron Fuel Source	≤ 2.23 x 10^8 n/sec per assy with spectrum bounded by that in Chapter 7 of SAR
Gamma (Fuel +BPRA) Source	≤ 7.45 x 10^{15} g/sec per assy with spectrum bounded by that in Chapter 7 of SAR

Table 1-1b
BWR Fuel Specifications of Fuel to be Stored in the Standardized NUHOMS®-52B DSC

Title or Parameter	Specifications
Fuel	Only intact, unconsolidated BWR fuel assemblies with the following requirements
Physical Parameters Maximum Assembly Length (unirradiated) Maximum Assembly Width (unirradiated) Maximum Assembly Weight No. of Assemblies per DSC Fuel Cladding	 176.16 in 5.454 in 725 lbs ≤ 52 intact channeled assemblies Zircaloy-clad fuel with no known or suspected gross cladding breaches
Nuclear Parameters Fuel Initial Lattice Enrichment Fuel Burnup and Cooling Time	 ≤ 4.0 wt. % U-235 Per Table 1-2b
Alternate Nuclear Parameters Initial Enrichment Burnup Decay Heat Neutron Source Gamma Source	 ≤ 4.0 wt. % U-235 ≤ 35,000 MWd/MTU ≤ 0.37 kW per assembly ≤ 1.01×10^{8} n/sec per assy with spectrum bounded by that in Chapter 7 of SAR ≤ 2.63×10^{15} g/sec per assy with spectrum bounded by that in Chapter 7 of SAR

Table 1-2a

PWR Fuel Qualification Table for the Standardized NUHOMS®-24P DSC (Fuel Without BPRAs)

(Minimum required years of cooling time after reactor core discharge)

Burnup (GWd/ MTU)	Initial Enrichment (wt. % U-235)																				
	2.0	2.1	2.2	2.3	2.4	2.5	2.6	2.7	2.8	2.9	3.0	3.1	3.2	3.3	3.4	3.5	3.6	3.7	3.8	3.9	4.0
10	a	a	a	a	a	a	a	a	a	a	a	a	a	a	a	a	a	a	a	a	a
15	5	5	a	a	a	a	a	a	a	a	a	a	a	a	a	a	a	a	a	a	a
20	5	5	5	5	5	a	a	a	a	a	a	a	a	a	a	a	a	a	a	a	a
25		5	5	5	5	5	5	5	5	a	a	a	a	a	a	a	a	a	a	a	a
28				5	5	5	5	5	5	5	5	5	a	a	a	a	a	a	a	a	a
30						5	5	5	5	5	5	5	5	a	a	a	a	a	a	a	a
32							5	5	5	5	5	5	5	5	5	a	a	a	a	a	a
34								6	5	5	5	5	5	5	5	5	5	a	a	a	a
36									6	6	6	6	5	5	5	5	5	5	5	a	a
38											7	6	6	6	6	6	6	6	5	5	5
40				Not Acceptable or Not Analyzed								8	8	8	7	6	6	6	6	6	6
41												9	9	9	8	8	8	8	8	8	8
42													10	9	9	9	9	9	9	8	8
43													10	10	10	10	10	9	9	9	9
44														11	11	11	11	10	10	10	10
45														12	12	11	11	11	11	11	11

a) Minimum Cooling Time 5 years, and Minimum 2350 ppm soluble boron required in the DSC cavity water during loading or unloading.

Notes:

- Use burnup and enrichment to lookup minimum cooling time in years. Licensee is responsible for ensuring that uncertainties in fuel enrichment and burnup are correctly accounted for during fuel qualification.
- Round burnup UP to next higher entry, round enrichments DOWN to next lower entry.
- Fuel with an initial enrichment less than 2.0 wt. % U-235 must be qualified for storage using the alternate nuclear parameters specified in Table 1-1a. Fuel with an initial enrichment greater than 4.0 wt. % U-235 is unacceptable for storage.
- Fuel with a burnup greater than 45 GWd/MTU is unacceptable for storage.
- Example: An assembly with an initial enrichment of 3.65 wt. % U-235 and a burnup of 42.5 GWd/MTU is acceptable for storage after a ten-year cooling time as defined at the intersection of 3.6 wt. % U-235 (rounding down) and 43GWd/MTU (rounding up) on the qualification table.

Table 1-2b

BWR Fuel Qualification Table for the Standardized NUHOMS®-52B DSC

(Minimum required years of cooling time after reactor core discharge)

Burnup (GWd/MTU)	Initial Enrichment (wt. % U-235)																				
	2.0	2.1	2.2	2.3	2.4	2.5	2.6	2.7	2.8	2.9	3.0	3.1	3.2	3.3	3.4	3.5	3.6	3.7	3.8	3.9	4.0
15	3	3	3	3	3	3	3	3	3	3	3	3	3	3	3	3	3	3	3	3	3
20	5	5	5	5	5	5	5	5	5	5	5	5	5	5	5	5	5	5	5	5	5
25	5	5	5	5	5	5	5	5	5	5	5	5	5	5	5	5	5	5	5	5	5
30				5	5	5	5	5	5	5	5	5	5	5	5	5	5	5	5	5	5
32					6	6	6	5	5	5	5	5	5	5	5	5	5	5	5	5	5
34						8	8	8	8	8	8	8	8	7	6	6	6	6	6	6	6
35							10	10	10	10	9	8	8	8	8	8	8	8	6	6	6
36							11	11	11	11	11	10	10	10	10	10	10	9	8	8	8
37								13	13	12	12	12	12	11	11	11	11	11	10	10	10
38								15	14	14	14	13	13	13	13	12	12	12	12	12	11
39								18	17	17	16	16	16	15	14	14	14	14	13	13	13
40									21	21	20	20	19	18	17	17	16	16	16	16	15
42										22	22	22	21	21	20	20	20	19	18	17	17
44										24	24	23	23	23	22	22	21	21	21	20	20
45											25	24	24	23	23	23	22	22	22	21	21

Not Acceptable or Not Analyzed

Notes:

- Use burnup and enrichment to lookup required cooling time in years. Licensee is responsible for ensuring that uncertainties in fuel enrichment and burnup are correctly accounted for during fuel qualification.
- Round burnup UP to next higher entry, round enrichments DOWN to next lower entry.
- Fuel with an initial enrichment less than 2.0 wt. % U-235 must be qualified for storage using the alternate nuclear parameters specified in Table 1-1b. Fuel with an initial enrichment greater than 4.0 wt. % U-235 is unacceptable for storage.
- Fuel with a burnup greater than 45 GWd/MTU is unacceptable for storage. Fuel with a burnup less than 15 GWd/MTU is acceptable after three years cooling time provided the physical parameters from Table 1-1b have been met.
- Example: An assembly with an initial enrichment of 3.05 wt. % U-235 and a burnup of 34.5 GWd/MTU is acceptable for storage after a nine-year cooling time as defined at the intersection of 3.0 wt. % U-235 (rounding down) and 35GWd/MTU (rounding up) on the qualification table.

Table 1-2c

PWR Fuel Qualification Table for the Standardized NUHOMS®-24P DSC (Fuel With BPRAs)

(Minimum required years of cooling time after reactor core discharge)

Burnup (GWd/MTU)	Initial Enrichment (wt. % U-235)																				
	2.0	2.1	2.2	2.3	2.4	2.5	2.6	2.7	2.8	2.9	3.0	3.1	3.2	3.3	3.4	3.5	3.6	3.7	3.8	3.9	4.0
10	*a*	*a*	*a*	*a*	*a*	*a*	*a*	*a*	*a*	*a*	*a*	*a*	*a*	*a*	*a*	*a*	*a*	*a*	*a*	*a*	*a*
15	5	5	*a*	*a*	*a*	*a*	*a*	*a*	*a*	*a*	*a*	*a*	*a*	*a*	*a*	*a*	*a*	*a*	*a*	*a*	*a*
20	5	5	5	5	5	*a*	*a*	*a*	*a*	*a*	*a*	*a*	*a*	*a*	*a*	*a*	*a*	*a*	*a*	*a*	*a*
25		5	5	5	5	5	5	5	5	*a*	*a*	*a*	*a*	*a*	*a*	*a*	*a*	*a*	*a*	*a*	*a*
28				5	5	5	5	5	5	5	5	5	*a*	*a*	*a*	*a*	*a*	*a*	*a*	*a*	*a*
30						6	6	6	5	5	5	5	5	*a*	*a*	*a*	*a*	*a*	*a*	*a*	*a*
32							6	6	6	6	6	6	5	5	5	*a*	*a*	*a*	*a*	*a*	*a*
34								7	6	6	6	6	6	6	6	6	6	*a*	*a*	*a*	*a*
36									8	7	7	7	6	6	6	6	6	6	6	*a*	*a*
38											8	8	7	7	7	7	6	6	6	6	6
40				Not Acceptable or Not Analyzed								9	9	8	8	8	7	7	7	7	6
41												10	9	9	9	9	8	8	8	8	8
42													10	10	9	9	9	9	9	9	9
43													11	11	11	10	10	10	10	9	9
44														12	11	11	11	11	10	10	10
45														13	12	12	12	11	11	11	11

a) Minimum Cooling Time 5 years, and Minimum 2350 ppm soluble boron required in the DSC cavity water during loading or unloading.

Notes:

- BPRA Burnup shall not exceed that of a BPRA irradiated in fuel assemblies with a total burnup of 36,000 MWd/MTU.
- Minimum cooling time for a BPRA is 5 years for B&W designs and 10 years for Westinghouse designs, regardless of the required assembly cooling time.
- Use burnup and enrichment to lookup minimum fuel assembly cooling time in years. Licensee is responsible for ensuring that uncertainties in fuel enrichment and burnup are correctly accounted for during fuel qualification.
- Round burnup UP to next higher entry, round enrichments DOWN to next lower entry.
- Fuel with an initial enrichment less than 2.0 wt. % U-235 must be qualified for storage using the alternate nuclear parameters specified in Table 1-1a. Fuel with an initial enrichment greater than 4.0 wt. % U-235 is unacceptable for storage.
- Fuel with a burnup greater than 45 GWd/MTU is unacceptable for storage.
- Example: An assembly with an initial enrichment of 3.65 wt. % U-235 and a burnup of 42.5 GWd/MTU is acceptable for storage after a ten-year cooling time as defined at the intersection of 3.6 wt. % U-235 (rounding down) and 43 GWd/MTU (rounding up) on the qualification table.

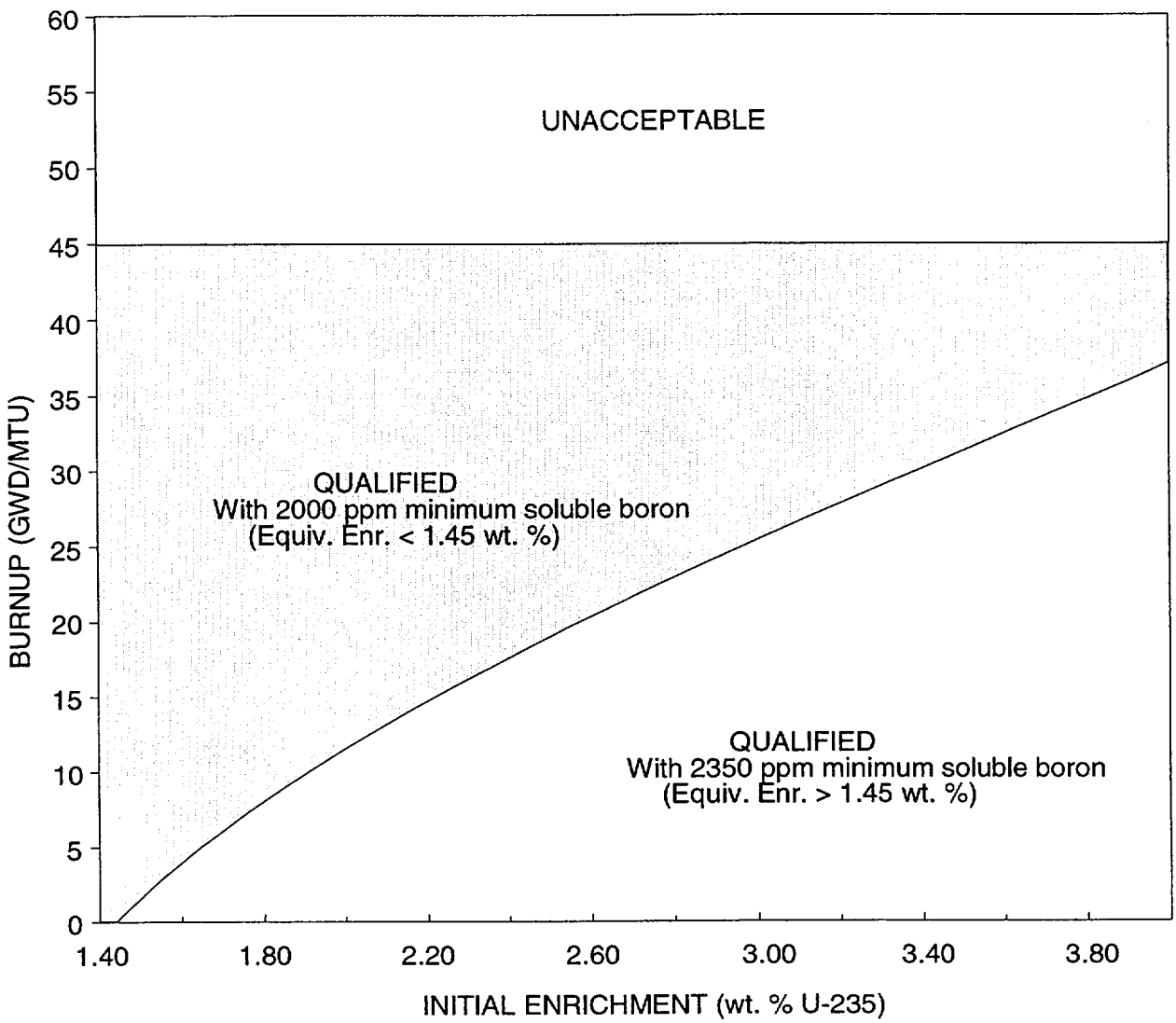

Figure 1.1
PWR Fuel Criticality Acceptance Curve

1.2.15 Boron Concentration in the DSC Cavity Water (24-P Design Only)

Limit/Specification:

The DSC cavity shall be filled only with water having a boron concentration equal to, or greater than:

1) 2,000 ppm *for fuel with an equivalent unirradiated enrichment of less than or equal to 1.45 wt. % U-235 (per Figure 1.1).*

2) 2,350 ppm for fuel with an equivalent unirradiated enrichment of greater than 1.45 wt. % U-235 (per Figure 1.1).

Applicability: This limit applies only to the standardized NUHOMS-24P design. No boration in the cavity water is required for the standardized NUHOMS-52B system since that system uses fixed absorber plates.

Objective:

1) To ensure a subcritical configuration is maintained in the case of accidental loading of the DSC with unirradiated fuel.

2) To ensure a subcritical configuration is maintained in the case of loading of the DSC with fuel with an equivalent unirradiated enrichment of greater than 1.45 wt. % U-235.

Action: If the boron concentration is below the required weight percentage concentration (gm boron/10^6 gm water), add boron and re-sample, and test the concentration until the boron concentration is shown to be greater than that required.

Surveillance: Written procedures shall be used to independently determine (two samples analyzed by different individuals) the boron concentration in the water used to fill the DSC cavity.

1. Within 4 hours before insertion of the first fuel assembly into the DSC, the dissolved boron concentration in water in the spent fuel pool, and in the water that will be introduced in the DSC cavity, shall be independently determined (two samples chemically analyzed by two individuals).

2. Within 4 hours before flooding the DSC cavity for unloading the fuel assemblies, the dissolved boron concentration in water in the spent pool, and in the water that will be introduced into the DSC cavity, shall be independently determined (two samples analyzed chemically by two individuals).

3. The dissolved boron concentration in the water shall be reconfirmed at intervals not to exceed 48 hours until such time as the DSC is removed from the spent fuel pool or the fuel has been removed from the DSC.

Bases:

1) The required boron concentration is based on the criticality analysis for an accidental misloading of the DSC with unburned fuel, maximum enrichment, and optimum moderation conditions.

2) *The required boron concentration is based on the criticality analysis for loading of the DSC with unirradiated fuel, maximum enrichment, and optimum moderation conditions.*

ATTACHMENT C

FSAR Changed Pages

(Revisions indicated relative to NUHOMS FSAR, Revision 5.)

- Table 3.1-1
- Table 3.1-1a
- Section 3.3.4.1 (Only Revised Pages are Included)
- Section 3.3.4.1.1 (Only Revised Pages are Included)
- Section 3.3.4.1.4 (Only Revised Pages are Included)
- Figure 3.3-3
- Section 3.6 (New Section)
- Section 3.7 (Only Revised Pages are Included)
- Section J.4.4 (Only Revised Pages are Included)

Table 3.1-1
Principal Acceptance Parameters for PWR Fuel to be Stored in NUHOMS® -24P DSC

Parameter	Value
Physical Parameters	
Assembly Length (Unirradiated)	
*With Burnup ≤ 45,000 MWd/MTU (*Standard Cavity *DSC)*	≤ 4.210 m (165.75 in.)
*With Burnup > 32,000 and ≤ 45,000 MWd/MTU (*Long Cavity *DSC)*	≤ 4.361 m (171.71 in.)
With Burnup ≤ 32,000 MWd/MTU (Long Cavity DSC)	*≤4.368 m (171.96 in.)*
Nominal Cross-Sectional Envelope	0.2168 m (8.536 in.)
Maximum Assembly Weight	≤ 764 Kg (1,682 lb.)
No. of Assemblies per DSC	≤ 24 intact assemblies
Thermal Characteristics	
Decay Heat Power per Assembly	≤1.0 kW
Radiological Characteristics	
Maximum Initial Enrichment	≤ 4.0 wt. % U-235
Burnup	≤ 40,000 MWd/MTU *and per Figure 3.3-3*
Post-Irradiation Cooling Time	≥ 5 years

Table 3.1-1a
PWR Fuel Assembly Designs Suitable for Storage

Type[1]	Width (in)	Assembly Unirradiated Length *(w/o* BPRAs) (in)*	Assembly Unirradiated Length *(with BPRAs)* (in)	Assembly Weight *(w/o* BPRAs)* (lbs)	Assembly Weight *(with BPRAs)* (lbs)	Heavy Metal Weight (kg-U)	Cladding Material
B&W 15x15[8]	8.536	165.75	170.875	1550.0	1682.0	475.0	Zircaloy-4
CE 14x14 Fort Calhoun[2]	8.100	147.00	*n/a*	1220.0	*n/a*	365.6	Zircaloy-4
CE 15x15 Palisades[3]	8.250	149.00	*n/a*	1360.0	*n/a*	412.4	Zircaloy-4
CE 14x14 Standard/Generic	8.100	157.00	*n/a*	1270.0	*n/a*	382.2	Zircaloy-4
Westinghouse 14x14[5]	7.763	160.13	*n/a*	1302.0	*n/a*	405.0	Zircaloy-4
Westinghouse 15x15[6]	8.434	160.10	*n/a*	1472.0	*n/a*	460.0	Zircaloy-4
Westinghouse 17x17[7]	8.434	160.10	167.220	1482.0	1663.2	461.0	Zircaloy-4
Limit:	8.536	165.75	171.710/*171.96*[9]	1682.0	1682.0	475.0	

(1) Each fuel assembly must be qualified for storage per 72-1004 CoC Technical Specifications.
(2) Includes Exxon/ANF FT. CALHOUN 14 X 14 ANF
(3) Includes Exxon/ANF 15x15 CE
(4) Not used
(5) Includes Exxon/ANF 14x14 Westinghouse
(6) Includes Exxon/ANF 15x15 Westinghouse
(7) Includes Babcock and Wilcox WE 17 X 17 B&W Mark BW
(8) Excludes Westinghouse 15x15 reload fuel for B&W 15x15 reactors
(9) Maximum allowed burnup is 32,000 MWd/MTU for the 171.96 long assemblies (plus BPRAs)

* w/o means without

A. Utilizing credit for the negative reactivity of soluble boron in the flooded DSC.

Since credit for burnup has not yet received generic approval by the NRC for dry storage applications, credit for soluble boron forms the design basis for the NUHOMS®-24P DSC until credit for burnup is generically accepted.

Several changes have been made to the generic NUHOMS®-24P design configuration analyzed in section 3.3.4.1. These changes include:

- The spacer disc material has been changed from SA-240, Type 304 stainless steel to SA-36 carbon steel. The thickness and location of the spacer discs have not changed.

- The support rod material has been changed from SA-479, Type 304 stainless steel or carbon steel to from SA-479, Type XM-19 stainless steel. The diameter of the support rods has been increased to 3.25 inches.

- The DSC guidesleeve configuration has been changed from twelve interior 12 gage sleeves and twelve 16 gage exterior sleeves to all 12 gage sleeves.

- The four stainless steel clips which connect each guidesleeve to the bottom spacer disc have been removed. To prevent removal of the guidesleeves from the basket if a fuel assembly is becomes stuck during insertion or removal, two stainless steel stops have been added to each guidesleeve between the second and third spacer discs from the top of the basket.

- The DSC guide sleeve length has been increased by 0.5 inch and 0.5 inch high flow channels have been provided at the bottom of guidesleeves on all four sides to allow drainage of any water inside the guidesleeve.

These changes in the 24P DSC basket configuration have been evaluated and the criticality analyses presented in section 3.3.4.1 remains bounding.

The NUHOMS®-52B DSC is designed to meet 10CFR72.124 criticality safety limits utilizing fixed neutron absorbing materials in the internal basket assembly until credit for burnup is generically accepted. The criticality safety analyses for the NUHOMS®-24P and NUHOMS®-52B DSCs are presented below.

3.3.4.1 NUHOMS®-24P DSC Criticality Safety *(Fuel with an Equivalent Unirradiated Enrichment of less than 1.45 wt. % U-235)*

The NUHOMS®-24P DSC credit for burnup criticality analysis is presented in the paragraphs which follow. The NUHOMS®-24P DSC credit for soluble boron analysis is documented by previous NRC question responses docketed under *NUHOMS-24P Topical Report[3.51]*. These question responses are included as Appendix F of this FSAR for ease of reference.

Appendix F documents that a soluble boron loading of 1810 ppm results in $k_{eff} \leq 0.98$ for zero burnup case. It also concludes that a burnup of 5 GWD/MTU is needed with 1810 ppm soluble boron if $k_{eff} \leq 0.95$ is required.

Section 3.1.2 of the Safety Evaluation Report [3.72] documents the current licensing basis for the specification of 2000 ppm soluble boron for the NUHOMS®-24P. As noted therein "The criticality safety analysis of the misloading of unirradiated fuel assemblies presented in the SAR [Section 3.3.4.1.5 A] and independent confirmatory calculations performed by the staff shows that the array reactivity can be maintained subcritical (keff <0.95) in this accident situation by filling the DSC with borated water before wet loading or unloading. The minimum level of boration required as determined by the staff analysis, based on 4.0 wt. % U-235 enrichment of unirradiated B&W 15x15 fuel assemblies was determined to be 2,000 ppm. The analysis presented in the SAR determined the minimum level of boration to be 1,810 ppm. In lieu of resolution of the difference between the staff and SAR analysis of the required minimum level of boration, the more conservative value of the staff analysis is taken".

FSAR section 3.6 provides the analysis to qualify the storage of PWR fuel assemblies with an equivalent unirradiated enrichment of greater than 1.45 wt. % U-235. Note that the increase in the soluble boron loading for these fuel assemblies is due to the differences in the criticality analysis methodologies, computer codes and assumptions used for the original licensing basis versus the analysis of Section 3.6.

3.3.4.1 Control Methods for Prevention of Criticality

A. General Methodology (NUHOMS®-24P)

The NUHOMS®-24P DSC basket is designed to ensure nuclear criticality safety during worst case wet loading operations. Rigorous measures are taken to exclude the possibility of flooding the DSC cavity during the transfer operations and storage period. Prior to these operations, the DSC is vacuum dried, backfilled with helium, double seal welded, and helium leak tested to assure weld integrity. Under these dry conditions there is no possibility of exceeding criticality safety limits. Since the transfer cask and HSM are designed to provide adequate drop and/or missile protection for the DSC, and the DSC basket is designed to maintain the fuel configuration after a drop accident, there is no credible accident scenario which would result in the possibility of water intrusion into the DSC; nor is there a credible accident scenario which would result in the canister being breached and flooded.

Control methods for the prevention of criticality for the NUHOMS®-24P DSC consist of the material properties of the fuel, administrative procedures (i.e., a plant-specific system using records or tests to document initial enrichment and burnup of the selected fuel assemblies), the geometrical arrangement of the basket and the inherent neutron absorption in the stainless steel guide sleeve assemblies.

Credit for burnup is taken by calculating an initial enrichment equivalent to the fissile inventory of the spent fuel. The CSAS2 criticality analysis sequence included in the SCALE-3 package of

computer codes (3.44) is used to demonstrate subcriticality during moderation by pure water having a wide density range. Credit is taken for negative reactivity due to stable fission products.

The DSC basket is shown by analysis in Chapter 8 to maintain its configuration and location of the fuel assemblies after a drop accident. The DSC shell is shown to maintain its integrity during the accident so that no credible accident exists whereby the DSC may be accidentally flooded with fresh water. Water intrusion is not feasible since the DSC has been qualified to be helium leak tight for all postulated events which is a much more limiting condition. ISFSI flooding does result in canister immersion and a water reflector for the spent fuel matrix. However, as has been shown for the NUHOMS®-52B DSC in Section 3.3.4.2, this case does not limit the design. Since moderator intrusion during storage is prevented, subcriticality of the DSC is assured during storage at the ISFSI.

B. Design Parameters for Criticality Model (NUHOMS®-24P)

The geometry and fuel characteristics of the NUHOMS®-24P DSC criticality model are shown in Table 3.3-3. Figure 3.3-1 shows the actual geometry of the DSC and the geometry of the CSAS2 model. Figure 3.3-2 describes the modeling of the fuel assembly guide sleeves with the heterogeneous fuel assembly region inside.

The reactivity equivalence curve presented in Figure 3.3-3 is used to determine the acceptability of storing specific fuel assemblies in the NUHOMS®-24P DSC. The predetermined residual reactivity limit is selected to correspond roughly to a fuel assembly at 80 percent of what is typically considered full burnup. The concept of reactivity equivalency is used to develop a curve of constant reactivity through the enrichment/burnup space assuming the DSC was fully loaded with spent B&W 15x15 fuel assemblies. The resulting curve of reactivity equivalence for the DSC is presented in Figure 3.3-3. The reactivity equivalence curve extends from a zero burnup, initial enrichment equivalent point of 1.45 wt. % (weight percent) U-235 to a high enrichment endpoint corresponding to 4.0 wt. % U-235 initial enrichment irradiated for approximately 37,000 MWD/MTU.

The selection of a 15x15 fuel assembly for PWR criticality calculations has been shown by many analyses to be the most reactive under a variety of conditions when compared to other PWR fuel assemblies (i.e., 14x14, 16x16, and 17x17) (3.28, 3.29, 3.30, 3.31). Thus the B&W 15x15 fuel selected as the design basis for the NUHOMS®-24P canister forms a sufficient basis to permit storage of PWR fuel types which meet the requirements of Section 10.3.1.1.

B-mod	=	Bias accounting for worst-case moderator density conditions
B-ref	=	Bias accounting for worst-case metal reflector positioning
ks-nominal	=	95/95 uncertainty in the nominal case k_{eff} value
ks-method	=	95/95 uncertainty in the method bias
ks-axial	=	95/95 uncertainty in the non-uniform axial burnup bias
ks-mechanical	=	95/95 uncertainty resulting from material and construction tolerances and positioning uncertainties
ks-reflector	=	95/95 uncertainty in the bias accounting for worst case metal reflector model assumptions
ks-burnup	=	Uncertainty in the equivalencing method results
ks-mod	=	95/95 uncertainty in the moderator density effects bias

Substituting the appropriate values for the nominal, zero-burnup case:

$k_{eff} = 0.94782$

All values of burnup used to develop the Figure 3.3-3 equivalence curve are selected to maintain k_{eff} equal to or below 0.94782.

Components of the final k_{eff} result for all cases analyzed are provided in Table 3.3-11. Additional information on the NUHOMS®-24P DSC criticality analysis with burnup credit is contained in Appendix F.

3.3.4.1.4 Off-Normal Conditions (NUHOMS®-24P)

Postulated off-normal conditions do not result in a NUHOMS®-24P DSC storage array reactivity which exceeds the k_{eff} value calculated and presented in Section 3.3.4.1.3.

The off-normal conditions considered include misloading of one or more high enrichment nonirradiated fuel assemblies into the DSC, and optimum moderation.

A. Misloading a High Enrichment Assembly

Misloading one or more fuel assemblies which do not qualify as acceptable for storage in the NUHOMS®-24P DSC according to the burnup equivalence curve shown in Figure 3.3-3 do not result in a k_{eff} value greater than the 0.95 criterion. The double contingency principle of ANSI/ANS 8.17-1984 can be applied to take credit for dissolved boron which is normally present in the PWR spent fuel pool and DSC during wet loading operations. The approximate 0.34 Δk negative reactivity provided by 2,000 ppm of soluble boron would more than compensate for the additional reactivity added by the misloading of one or more unqualified, high enrichment fuel assemblies.

B. Optimum Moderation

Optimum moderation conditions are considered and a conservative bias is applied in the normal case analysis presented in Section 3.3.4.1.3. Therefore, the presence of a pure water moderator of optimum density does not result in a NUHOMS®-24P DSC storage array reactivity which exceeds the k_{eff} value calculated and presented in Section 3.3.4.1.3. Further, it is possible that moderator densities other than unity could occur if moderator boiling temperatures were to be reached; however, unirradiated high enriched fuel provides no decay heat for moderator heating. Thus, this is a non-mechanistic unrealistic condition. The condition can be conceived for optimal moderation for irradiated fuel with high decay heats; however, the reactivity of the fuel is significantly reduced compared with that of unirradiated fuel.

3.3.4.15 Safety Criteria Compliance (NUHOMS®-24P)

The calculated worst-case k_{eff} value for a fully loaded NUHOMS®-24P DSC flooded with pure unborated water of a uniform optimum density is 0.94782. This calculated maximum k_{eff} value includes consideration of geometrical, material, and burnup uncertainties and biases at a 95/95 tolerance level as required by ANSI/ANS 57.2-1983 to demonstrate criticality safety.

Additionally, off-normal conditions potentially resulting in reactivity increases over the normal conditions considered are addressed and found to be acceptable.

The analyses presented in this SAR section and Appendix F demonstrate that the ANSI/ANS 57.2-1983 criteria limiting k_{eff} to 0.95 is satisfied under all postulated conditions for the NUHOMS®-24P DSC.

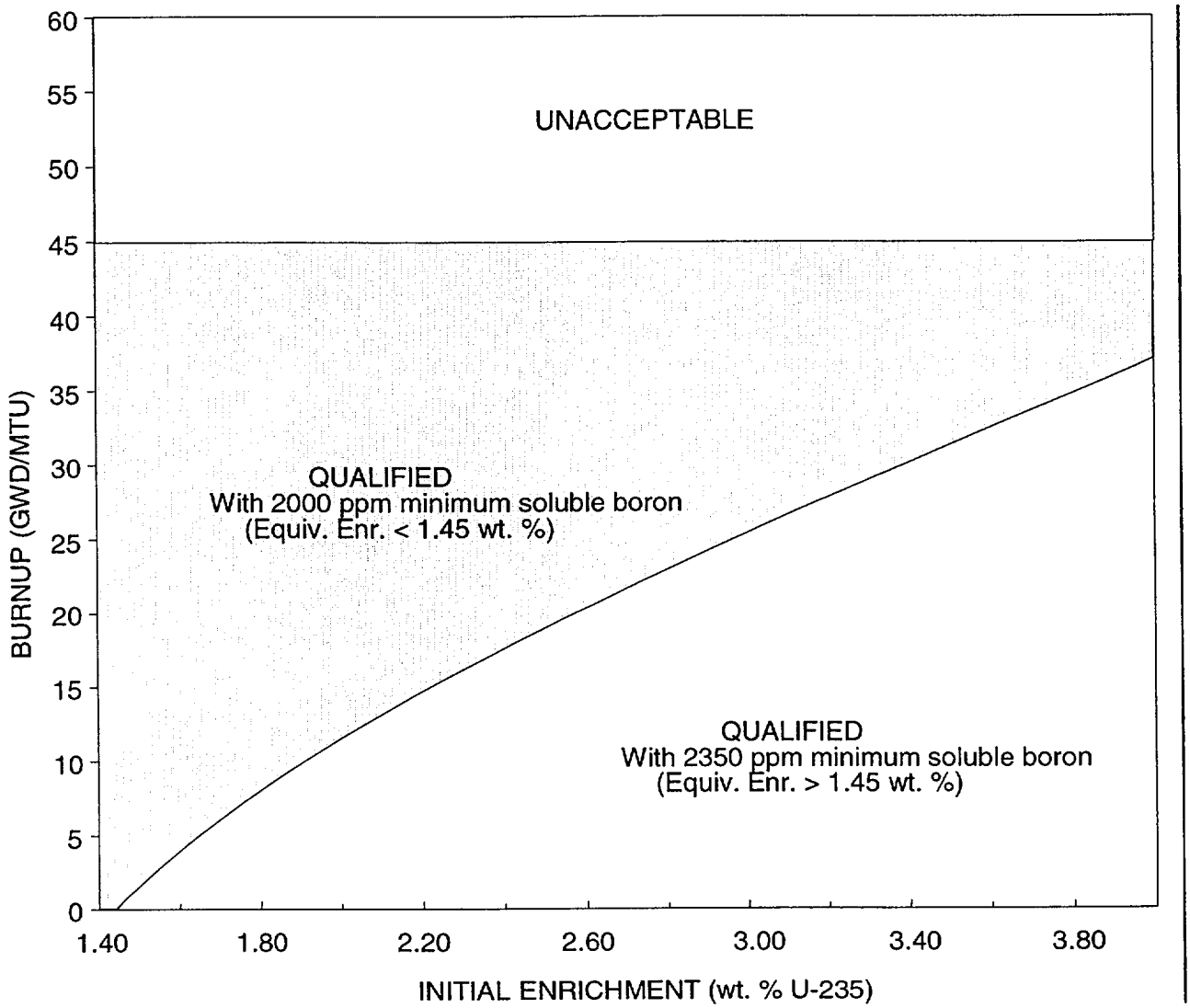

Figure 3.3-3
NUHOMS®-24P DSC Burnup Equivalence Curve

3.6 Criticality Evaluation for Fuel With an Equivalent Unirradiated Enrichment of Greater than 1.45 wt. % U-235

The NUHOMS®-24P design criticality analysis is documented in Section 3.3.4.1 and Appendix J of this FSAR. A new evaluation has been performed to determine the boron concentration in the DSC cavity water during loading/unloading operations necessary to keep the system reactivity below 0.95 for fuels with an equivalent unirradiated enrichment of greater than 1.45 wt. % U-235 (FSAR Figure 3.3-3).

KENO-Va (CSAS25 of SCALE 4.4)[3.71] is used to demonstrate that the worst case fuel assembly type B&W 15x15 fuel designs with a maximum of 4.0 wt. % enriched U-235 fuel are bounded by the upper subcritical limit for storage in the standardized NUHOMS®-24P system. The analysis is performed with and without Burnable Poison Rod Assemblies (BPRAs). No credit was taken for BPRA cladding and absorbers, rather the BPRA is modeled as $^{11}B_4C$ in the entire guide tube. Thus, the highly borated moderator between the guide tube and the BPRA rodlet is modeled as $^{11}B_4C$. The inclusion of more Boron-11 and carbon enhances neutron scattering causing the neutron population in the fuel assembly to be slightly increased which increases reactivity. The analysis was performed with soluble boron in the DSC cavity and with pure water or void in the fuel-cladding gap and upper plenum region.

3.6.1 Discussion and Results

The results demonstrate that boron loading of 2350 ppm will maintain the system reactivity below 0.95. This is demonstrated by modeling the design basis B&W 15x15 fuel assembly (with and without BPRAs) with pure water or void in the fuel-cladding gap and upper plenum region in a canister flooded with borated water with a moderator density range of 0.0001 g/cc to approximately 1.0 g/cc.

The evaluation used unirradiated B&W 15x15 Mark B loaded with 4.0 wt. % enriched U-235 fuel pins in 2350 ppm borated water. Three parameters are included: moderator density, contents of guide tubes and instrument tubes, and the fuel-cladding gap contents. Consistent with the criticality analysis presented in Appendix J of the FSAR, it is assumed that a comparison of fuel assemblies with and without BPRAs is bounded by modeling the volumes which could be occupied by BPRAs as filled with $^{11}B_4C$. This is done to bound the reactivity effects of BPRAs stored with fuel. Modeling the BPRAs as $^{11}B_4C$ is appropriate since the net effect is to substitute material with a very small thermal absorption cross section for material which in reality would have some remaining B_{10}. The scattering or moderating effect of pure $^{11}B_4C$ is very similar to Zircaloy. In addition, the instrument tubes are conservatively assumed to be filled with $^{11}B_4C$. It is assumed that 100% dense pure water fills the fuel-cladding gap and upper plenum region. A series of calculations are also run with void in the cladding gap and plenum region to determine the bounding condition.

3.6.2 Package Fuel Loading

The package fuel loading remains unchanged from previous analysis presented in Section 3.3.4.1 and Appendix J of the FSAR. The B&W 15x15 fuel assembly design parameters and layout used in this evaluation are given in Appendix J Table J.6-1 and Figure J.6-1.

3.6.3 Model Specification

Four cases are evaluated: (1) with BPRAs (2) without BPRAs (3) with water in the fuel cladding gap for cases 1 and 2 and (4) without water in the fuel cladding gap for cases 1 and 2. For each case, simulations at moderator densities ranging from approximately 1.0 g/cc to 0.0001 g/cc were performed to ensure that the resulting k_{eff} does not exceed the maximum allowable upper subcritical limit (USL) value.

The model simulates the actual NUHOMS®-24P DSC geometry including the 24 fuel assemblies within the guide sleeves, the four axial support rods, and the steel DSC shell. Each of the fuel assembly components is modeled discretely using the dimensions as described in section 3.6.2. The DSC is flooded with borated water and an additional 12 inches of borated water outside the DSC is added for increased reflection. In addition, the worst case dimensional tolerances for the DSC basket were used. The models assumed minimum spacer disk ligament widths, maximum over sleeve wall thickness, and all fuel assemblies pushed toward the center of the DSC in the guidesleeves.

The "worst case" k_{eff} values from the KENO Va runs are adjusted for uncertainty, such that:

$$k_{eff} = k_{calculated} + 2\sigma$$

This approach is conservative since the $k_{calculated}$ values assume:

- *Unirradiated fuel – no credit taken for fissile depletion or fission product poisoning.*
- *No credit is taken for residual neutron absorber in the BPRAs.*
- *The fuel enrichment is modeled as uniform everywhere throughout the assembly with a 4.0 wt. % lattice average enrichment.*
- *All fuel rods are modeled with 100% dense pure water in the fuel-cladding gap and plenum region.*
- *3-D modeling is implemented in all KENO models. The DSC is modeled having a finite length with water albedo boundary conditions specified on all sides.*
- *Only the active fuel length and the upper plenum region are explicitly modeled. The presence of fuel assembly components above and below these regions is modeled as borated water.*

- *The most material condition was assumed for the over sleeves. The neutron absorption gained in the thicker steel sheets is offset by the decreased absorption in the displaced borated water. The least material condition was assumed for the guide sleeve thickness. This allowed for the fuel assemblies to be pushed as far inward as possible.*

The KENO models consist of 1586 axial layers stacked into an array. The layers consist of partial spacer disk or partial moderator regions inside and outside of the active fuel region and upper plenum region as presented in Figure 3.6-1. The very top and bottom layers of the model are the DSC steel cylinders. The DSC model contains 8 spacer disk regions, each 2 inches thick, surrounded by a total of 9 non-disk regions. The center-to-center spacing of the spacer disk intervals varies over a range from 5.5 inches to 22.6 inches. A 12 inch water differential albedo boundary condition is used for all cases.

UNIT 33 is a slice through the cask at the DSC spacer disk level. UNIT 34 is a slice through the moderator region between spacer disks as shown in Figure 3.6-2. UNIT 37 is a slice through the moderator region between the spacer disks including the over sleeve. UNIT 134 is a slice through the moderator region between the spacer disks at the plenum height. UNIT 137 is a slice through the moderator region between the spacer disks including the over sleeve at the plenum height. UNIT numbers 1-8 are used to represent the active fuel assemblies in both the spacer disk region and in the moderator region. Units 100-800 are used to represent the plenum region in both the spacer disk region and in the moderator region. The fuel assemblies are inserted into the model using KENO's HOLE capability.

No attempt has been made to model fission products, burnable poisons, or axial and radial variations in initial fuel enrichment. Instead, fuel assemblies have been modeled as if they were composed of only a single enrichment unirradiated fuel. This assumption results in a very large margin of conservatism in the calculated k_{eff}.

All calculations were performed using SCALE4.4 [3.71], CSAS25 and the 44-group ENDF/B-V cross section library.

The dimensional data with worst case tolerances for the NUHOMS®-24P DSC used in the CSAS25 (KENO-Va) models is given in Table 3.6-1. *A quarter-core layout of fuel assemblies, support tie rods and stainless shell is shown in Figure 3.6-3.*

3.6.4 Criticality Analysis

The maximum k_{eff} for the NUHOMS®-24P was determined to be 0.9339±0.0009 (0.9357 w/2 σ) from KENO Va case with pure water in the fuel-cladding gap and upper plenum region, no BPRAs, internal moderation at 0.4 g/cc, and a boron loading of 2350 ppm. Therefore, the maximum final k_{eff} (0.9357) in the moderator density in the range of 0.0001 g/cc to approximately 1.0 g/cc, meets the USL criteria of less than 0.9410 as defined in FSAR section 3.6.5. The criticality results are presented in Figure 3.6-4. Table 3.6-2 *through Table* 3.6-5 *present the results for each set of KENO cases.*

3.6.5 Critical Benchmark Experiments

The criticality safety analysis presented in Section 3.6 used the CSAS25 module of the SCALE system of codes.

The analysis presented in Section 3.6 uses the fresh fuel assumption for criticality analysis. The analysis employed the 44-group ENDF/B-V cross-section library because it has a small bias, as determined by the 125 benchmark calculations described in reference [3.70]. The USL Method 1 (USL-1) was determined using the results of these 125 benchmark calculations.

The benchmark problems used to perform this verification are representative of benchmark arrays of commercial light water reactor (LWR) fuels with the following characteristics:

(1) water moderation

(2) boron neutron absorbers

(3) unirradiated light water reactor type fuel (no fission products or "burnup credit") near room temperature (vs. reactor operating temperature)

(4) close reflection

(5) Uranium Oxide

The 125 uranium oxide experiments were chosen to model a wide range of uranium enrichments, fuel pin pitches, assembly separation, concentration of soluble boron and control elements in order to test the codes ability to accurately calculate k_{eff}. These experiments are discussed in detail in reference [3.70]. The Run ID referred to in the following sub-sections are identical to those used in [3.70].

3.6.5.1 Benchmark Experiments and Applicability

A summary of all of the pertinent parameters for each experiment is included in Table 3.6-6 *along with the results of each run. The best correlation is observed for fuel assembly separation distance with a correlation of 0.65. All other parameters show much lower correlation ratios indicating no real correlation. All parameters were evaluated for trends and to determine the most conservative USL.*

*The USL is calculated in accordance to NUREG/CR-6361. USL applies a statistical calculation of the bias and its uncertainty plus an administrative margin (0.05) to the linear fit of results of the experimental benchmark data. The basis for the administrative margin is from NUREG-1536. Results from the USL evaluation are presented in Table 3.*3.6-7.

The criticality evaluation used the same cross section set, fuel materials and similar material/geometry options that were used in the 125 benchmark calculations as shown in Table 3.6-6. *The modeling techniques and the applicable parameters listed in Table 3.*3.6-8 *for the*

actual criticality evaluations fall within the range of those addressed by the benchmarks in Table 3.6-6.

3.6.5.2 Results of the Benchmark Calculations

*The results from the comparisons of physical parameters of each of the fuel assembly types to the applicable USL value are presented in Table 3.*3.6-8. *The minimum value of the USL was determined to be 0.9410 based on comparisons to the limiting assembly parameters as shown in Table 3.*3.6-8.

3.6.6 Example Keno V.a Input Listing

B&W 15x15 Mark B Without BPRAs

```
=csas25
4.0% Enriched, 2350 ppm, .4 g/cc, water in the gap, 8" upper plenum
```

Title line describing 4.0 wt. % U-235 enrich with a soluble boron content of 2350 ppm, 0.4 g/cc moderator density inside the DSC, pure water in the fuel-cladding gap and plenum region, and an actual plenum height of 8.7"

```
44GROUPNDF5 LATTICECELL
```

The 44-group ENDF/B-V cross section library is called out using square lattice geometry. Material Specifications Follow:

```
UO2            1  0.9453              293.0  92235 4.0  92238 96.0   END
SS304          2  1.00                293.0                           END
'Borated Water'
H              3  0  0.0267           293.0                           END
O              3  0  0.0134           293.0                           END
B-11           3  0  4.194E-05        293.0                           END
B-10           3  0  1.042E-05        293.0                           END
CARBONSTEEL    4  1.00                293.0                           END
H2O            5  DEN=1.0000  1.0     293.0                           END
PB             7  1.00                293.0                           END
AL             8     0  7.0275-03    293.0                           END
CA             8     0  1.4835-03    293.0                           END
C              8     0  8.2505-03    293.0                           END
H              8     0  5.0996-02    293.0                           END
FE             8     0  1.0628-04    293.0                           END
O              8     0  3.7793-02    293.0                           END
SI             8     0  1.2680-03    293.0                           END
H2O            9  DEN=1.0000  1.0     293.0                           END
ZIRC4         10   1.00               293.0                           END
END COMP
SQUAREPITCH  1.44272 0.9362 1  3 1.0922  10 0.9576   5            END
4.0% Enriched, 2350 ppm, .4 g/cc, water in the gap, 8" upper plenum
READ PARA
gen=500 npg=1000 nsk=5 nub=yes run=yes tme=300 plt=no
END PARA
READ GEOM
   UNIT 1     COM='FA #1,#2,#4 AND GS, SD, INNER FA(S), outer sleeve, NE QUAD'
       CUBOID          3          1
       11.1316    -11.5506     11.1316    -11.5506     0.2540    0.0
   HOLE 32       -0.69215    -0.69215          0
       CUBOID          2          1
      11.7031   -12.1221    11.7031   -12.1221     0.2540        0.0
       CUBOID          3          1
    12.12215 -12.12215  12.12215 -12.12215     0.2540        0.0
```

Fuels Assemblies 1, 2, and 4 are all located in the NE quadrant of the DSC model and are the inner most assemblies. Unit 1 describes the geometry used for the guide sleeve locations that also have the outer sleeve. The third cuboid in the model defines the outer boundary of the unit and is composed of borated water. The second cuboid defines the guide sleeve + over sleeve position within this volume. The first cuboid is the borated water region within the guide sleeve. The difference between cuboid one and cuboid two is the thickness of the guide sleeve and the over sleeve. Hole 32 is the "active fuel assembly" and is placed in the lower left corner of the guide sleeve.

```
   UNIT 2     COM='FA #3,#5,#6 AND GS, SD, OUTER FA(S), NE QUAD.'
       CUBOID          3          1
      11.1316    -11.5506     11.1316    -11.5506     0.2540    0.0
   HOLE 32       -0.69215    -0.69215          0
       CUBOID          2          1
      11.3856   -11.8046    11.3856   -11.8046     0.2540        0.0
       CUBOID          3          1
```

```
11.80465 -11.80465  11.80465 -11.80465     0.2540        0.0
```

Unit 2 describes the geometry used for just the guide sleeve locations. The third cuboid in the model defines the spacer disk cutout size. The second cuboid defines the guide sleeve position within the cutout. The first cuboid is the borated water region within the guide sleeve. The difference between cuboid one and cuboid two is the thickness of the guide sleeve. Hole 32 is the "active fuel assembly" and is placed in the lower left corner of the guide sleeve.

The following units are similar to units 1 and 2 with the exception of the fuel assembly position. In all cases the fuel assemblies are placed in the most radially inward position within the guide sleeve.

```
UNIT 3      COM='FA #7,#8,#10 AND GS, SD, INNER FA(S),outer sleeve NW QUAD.'
    CUBOID          3          1
    11.5506     -11.1316    11.1316    -11.5506     0.2540    0.0
HOLE 32          0.69215    -0.69215          0
    CUBOID          2          1
   12.1221      -11.7031    11.7031   -12.1221     0.2540    0.0
    CUBOID          3          1
 12.12215 -12.12215  12.12215 -12.12215     0.2540        0.0
UNIT 4      COM='FA #9,#11,#12 AND GS, SD, OUTER FA(S), NW QUAD'
     CUBOID          3          1
    11.5506     -11.1316    11.1316    -11.5506     0.2540    0.0
HOLE 32          0.69215    -0.69215          0
    CUBOID          2          1
   11.8046      -11.3856    11.3856   -11.8046     0.2540    0.0
    CUBOID          3          1
 11.80465 -11.80465  11.80465 -11.80465     0.2540        0.0
UNIT 5     COM='FA #13,#14,#16 AND GS, SD, INNER FA(S),outer sleeve SW QUAD.'
    CUBOID          3          1
    11.5506     -11.1316    11.5506    -11.1316     0.2540    0.0
HOLE 32          0.69215     0.69215          0
    CUBOID          2          1
   12.1221      -11.7031    12.1221    -11.7031     0.2540    0.0
    CUBOID          3          1
 12.12215 -12.12215  12.12215 -12.12215     0.2540        0.0
UNIT 6     COM='FA #15,#17,#18 AND GS, SD, OUTER FA(S), SW QUAD'
    CUBOID          3          1
    11.5506     -11.1316    11.5506    -11.1316     0.2540    0.0
HOLE 32          0.69215     0.69215          0
    CUBOID          2          1
   11.8046      -11.3856    11.8046    -11.3856     0.2540    0.0
    CUBOID          3          1
 11.80465 -11.80465  11.80465 -11.80465     0.2540        0.0
UNIT 7     COM='FA #19,#20,#22 AND GS, SD, INNER FA(S),outer sleeve SE QUAD'
    CUBOID          3          1
    11.1316    -11.5506     11.5506    -11.1316     0.2540    0.0
HOLE 32        -0.69215     0.69215          0
    CUBOID          2          1
   11.7031   -12.1221    12.1221   -11.7031     0.2540        0.0
    CUBOID          3          1
 12.12215 -12.12215  12.12215 -12.12215     0.2540        0.0
UNIT 8     COM='FA #21,#23,#24 AND GS, SD, OUTER FA(S), SE QUAD'
    CUBOID          3          1
    11.1316    -11.5506     11.5506    -11.1316     0.2540    0.0
HOLE 32        -0.69215     0.69215          0
    CUBOID          2          1
   11.3856   -11.8046    11.8046   -11.3856     0.2540        0.0
    CUBOID          3          1
 11.80465 -11.80465  11.80465 -11.80465     0.2540        0.0
UNIT 100  COM='FA #1,#2,#4 AND GS, SD, INNER FA(S), outer sleeve, NE QUAD'
    CUBOID          3          1
    11.1316    -11.5506     11.1316    -11.5506     0.2540    0.0
HOLE 132       -0.69215    -0.69215          0
    CUBOID          2          1
   11.7031   -12.1221    11.7031   -12.1221     0.2540        0.0
    CUBOID          3          1
 12.12215 -12.12215  12.12215 -12.12215     0.2540        0.0
```

Unit 100 through Unit 800 are similar to units 1 through 8 with the exception that Hole 32 is replaced with Hole 132 which models the plenum region of the fuel rod.

```
UNIT 200  COM='FA #3,#5,#6 AND GS, SD, OUTER FA(S), NE QUAD.'
    CUBOID          3          1
   11.1316    -11.5506     11.1316    -11.5506     0.2540    0.0
HOLE 132       -0.69215    -0.69215          0
    CUBOID          2          1
   11.3856   -11.8046    11.3856   -11.8046     0.2540        0.0
    CUBOID          3          1
 11.80465 -11.80465  11.80465 -11.80465     0.2540        0.0
UNIT 300  COM='FA #7,#8,#10 AND GS, SD, INNER FA(S),outer sleeve NW QUAD.'
    CUBOID          3          1
    11.5506     -11.1316    11.1316    -11.5506     0.2540    0.0
HOLE 132          0.69215    -0.69215          0
    CUBOID          2          1
   12.1221      -11.7031    11.7031   -12.1221     0.2540    0.0
    CUBOID          3          1
 12.12215 -12.12215  12.12215 -12.12215     0.2540        0.0
UNIT 400  COM='FA #9,#11,#12 AND GS, SD, OUTER FA(S), NW QUAD'
     CUBOID          3          1
    11.5506     -11.1316    11.1316    -11.5506     0.2540    0.0
HOLE 132          0.69215    -0.69215          0
    CUBOID          2          1
   11.8046      -11.3856    11.3856   -11.8046     0.2540    0.0
    CUBOID          3          1
 11.80465 -11.80465  11.80465 -11.80465     0.2540        0.0
UNIT 500  COM='FA #13,#14,#16 AND GS, SD, INNER FA(S),outer sleeve SW QUAD.'
    CUBOID          3          1
    11.5506     -11.1316    11.5506    -11.1316     0.2540    0.0
HOLE 132          0.69215      0.69215          0
    CUBOID          2          1
   12.1221      -11.7031    12.1221    -11.7031     0.2540    0.0
    CUBOID          3          1
 12.12215 -12.12215  12.12215 -12.12215     0.2540        0.0
UNIT 600  COM='FA #15,#17,#18 AND GS, SD, OUTER FA(S), SW QUAD'
    CUBOID          3          1
    11.5506     -11.1316    11.5506    -11.1316     0.2540    0.0
HOLE 132         0.69215      0.69215          0
    CUBOID          2          1
   11.8046      -11.3856    11.8046    -11.3856     0.2540    0.0
    CUBOID          3          1
 11.80465 -11.80465  11.80465 -11.80465     0.2540        0.0
UNIT 700  COM='FA #19,#20,#22 AND GS, SD, INNER FA(S),outer sleeve SE QUAD'
    CUBOID          3          1
    11.1316    -11.5506     11.5506    -11.1316     0.2540    0.0
HOLE 132       -0.69215     0.69215          0
    CUBOID          2          1
   11.7031   -12.1221    12.1221   -11.7031     0.2540        0.0
    CUBOID          3          1
 12.12215 -12.12215  12.12215 -12.12215     0.2540        0.0
UNIT 800  COM='FA #21,#23,#24 AND GS, SD, OUTER FA(S), SE QUAD'
    CUBOID          3          1
    11.1316    -11.5506     11.5506    -11.1316     0.2540    0.0
HOLE 132       -0.69215     0.69215          0
    CUBOID          2          1
   11.3856   -11.8046    11.8046   -11.3856     0.2540        0.0
    CUBOID          3          1
 11.80465 -11.80465  11.80465 -11.80465     0.2540        0.0
UNIT 9     COM='FA #1,#2,#4 AND GS, NON FUEL outer sleeve'
    CUBOID          3          1
    11.1316    -11.5506     11.1316    -11.5506     0.2540    0.0
    CUBOID          2          1
   11.7031   -12.1221    11.7031   -12.1221     0.2540        0.0
    CUBOID          3          1
 12.12215 -12.12215  12.12215 -12.12215     0.2540        0.0
```

Unit 9 through Unit 16 are similar to units 1 through 8 with the exception that they model non-fuel rod positions within the DSC.

```
UNIT 10     COM='FA #3,#5,#6 AND GS, NON FUEL'
    CUBOID          3          1
    11.1316    -11.5506     11.1316    -11.5506     0.2540    0.0
    CUBOID          2          1
   11.3856   -11.8046    11.3856   -11.8046     0.2540        0.0
    CUBOID          3          1
 11.80465 -11.80465  11.80465 -11.80465     0.2540        0.0
UNIT 11     COM='FA #7,#8,#10 AND GS, NON FUEL outer sleeve'
    CUBOID          3          1
    11.5506     -11.1316    11.1316    -11.5506     0.2540    0.0
    CUBOID          2          1
   12.1221      -11.7031    11.7031   -12.1221     0.2540    0.0
    CUBOID          3          1
 12.12215 -12.12215  12.12215 -12.12215     0.2540        0.0
UNIT 12      COM='FA #9,#11,#12 AND GS, NON FUEL'
    CUBOID          3          1
    11.5506     -11.1316    11.1316    -11.5506     0.2540    0.0
    CUBOID          2          1
   11.8046      -11.3856    11.3856   -11.8046     0.2540    0.0
    CUBOID          3          1
 11.80465 -11.80465  11.80465 -11.80465     0.2540        0.0
UNIT 13     COM='FA #13,#14,#16 AND GS, NON FUEL outer sleeve'
    CUBOID          3          1
    11.5506     -11.1316    11.5506    -11.1316     0.2540    0.0
    CUBOID          2          1
   12.1221      -11.7031    12.1221    -11.7031     0.2540    0.0
    CUBOID          3          1
 12.12215 -12.12215  12.12215 -12.12215     0.2540        0.0
UNIT 14     COM='FA #15,#17,#18 AND GS, NON FUEL'
    CUBOID          3          1
    11.5506     -11.1316    11.5506    -11.1316     0.2540    0.0
    CUBOID          2          1
   11.8046      -11.3856    11.8046    -11.3856     0.2540    0.0
    CUBOID          3          1
 11.80465 -11.80465  11.80465 -11.80465     0.2540        0.0
UNIT 15     COM='FA #19,#20,#22 AND GS, NON FUEL outer sleeve'
    CUBOID          3          1
    11.1316    -11.5506     11.5506    -11.1316     0.2540    0.0
    CUBOID          2          1
   11.7031   -12.1221    12.1221   -11.7031     0.2540        0.0
    CUBOID          3          1
 12.12215 -12.12215  12.12215 -12.12215     0.2540        0.0
UNIT 16     COM='FA #21,#23,#24 AND GS, NON FUEL'
    CUBOID          3          1
    11.1316    -11.5506     11.5506    -11.1316     0.2540    0.0
    CUBOID          2          1
   11.3856   -11.8046    11.8046   -11.3856     0.2540        0.0
    CUBOID          3          1
 11.80465 -11.80465  11.80465 -11.80465     0.2540        0.0
```

Unit 29 models an active fuel rod slice 0.1" high. Unit 129 models a slice through the plenum region 0.1" high. Unit 30 and Unit 31 model the guide tube and instrument tube respectively.

```
UNIT 29     COM='FUEL ROD CELL, 0.2540 CM HIGH'
  CYLINDER          1          1
   0.4681     0.2540        0.0
  CYLINDER          5          1
   0.4788     0.2540        0.0
  CYLINDER          10          1
   0.54610     0.2540        0.0
    CUBOID          3          1
   0.72136   -0.72136    0.72136   -0.72136     0.2540        0.0
UNIT 129     COM='FUEL Rod Plenum CELL, 0.2540 CM HIGH'
  CYLINDER          5          1
   0.4788     0.2540        0.0
  CYLINDER          10          1
   0.54610     0.2540        0.0
    CUBOID          3          1
```

```
   0.72136   -0.72136    0.72136   -0.72136     0.2540        0.0
UNIT 30    COM='GUIDE TUBE CELL, 0.2540 CM HIGH'
  CYLINDER          3          1
   0.6325     0.2540        0.0
  CYLINDER         10          1
   0.67310    0.2540        0.0
    CUBOID          3          1
   0.72136   -0.72136    0.72136   -0.72136     0.2540        0.0
UNIT 31    COM='INSTRUMENT TUBE CELL, 0.2540 CM HIGH'
  CYLINDER          3          1
   0.5601     0.2540        0.0
  CYLINDER         10          1
   0.62611    0.2540        0.0
    CUBOID          3          1
   0.72136   -0.72136    0.72136   -0.72136     0.2540        0.0
```

Unit 32 contains Array 1, a 0.1" high slice of the active fuel region of the design basis 15x15 B&W fuel assembly.

```
UNIT 32  COM='15x15 Zr-4 CLAD FUEL ASSY, 0.2540 CM HIGH'
   ARRAY 1   -10.8204   -10.8204        0.0
```

Unit 132 contains Array 1, a 0.1" high slice of the plenum region of the design basis 15x15 B&W fuel assembly.

```
UNIT 132 COM='15x15 Zr-4 CLAD FUEL plenum region, 0.2540 CM HIGH'
   ARRAY 3   -10.8204   -10.8204        0.0
```

Unit 33 is representative of a slice of the cask at the spacer disk level in the active fuel region. This slice is only 0.1" high. All the holes modeled are representative of the cutouts in units 1-8. The cylinders represent the DSC thickness.

```
UNIT 33  COM='0.2540 CM HIGH SLICE THRU CASK AT SPACER DISK'
  CYLINDER          4          1
     83.185     0.2540        0.0
  HOLE 2      13.3731   13.3731        0.0
  HOLE 2      39.4843   13.3731        0.0
  HOLE 2      64.9605   13.3731        0.0
  HOLE 2      13.3731   39.4843        0.0
  HOLE 2      39.4843   39.4843        0.0
  HOLE 2      13.3731   64.9605        0.0
  HOLE 4     -13.3731   13.3731        0.0
  HOLE 4     -39.4843   13.3731        0.0
  HOLE 4     -64.9605   13.3731        0.0
  HOLE 4    -13.3731   39.4843        0.0
  HOLE 4    -39.4843   39.4843        0.0
  HOLE 4    -13.3731   64.9605        0.0
  HOLE 6    -13.3731  -13.3731        0.0
  HOLE 6    -39.4843  -13.3731        0.0
  HOLE 6    -64.9605  -13.3731        0.0
  HOLE 6    -13.3731  -39.4843        0.0
  HOLE 6    -39.4843  -39.4843        0.0
  HOLE 6    -13.3731  -64.9605        0.0
  HOLE 8     13.3731  -13.3731        0.0
  HOLE 8     39.4843  -13.3731        0.0
  HOLE 8     64.9605  -13.3731        0.0
  HOLE 8     13.3731  -39.4843        0.0
  HOLE 8     39.4843  -39.4843        0.0
  HOLE 8     13.3731  -64.9605        0.0
  CYLINDER          2          1
   85.3313     0.2540        0.0
    CUBOID          3          1
   100.0   -100.0    100.0   -100.0     0.2540        0.0
```

Unit 133 is representative of a slice of the cask at the spacer disk level in the plenum region. This slice is only 0.1" high. All the holes modeled are representative of the cutouts in units 100-800. The cylinders represent the DSC thickness.

```
UNIT 133  COM='0.2540 CM HIGH SLICE THRU CASK AT SPACER DISK'
  CYLINDER          4          1
```

```
   83.185      0.2540        0.0
HOLE 200      13.3731   13.3731        0.0
HOLE 200      39.4843   13.3731        0.0
HOLE 200      64.9605  13.3731       0.0
HOLE 200      13.3731   39.4843        0.0
HOLE 200      39.4843   39.4843        0.0
HOLE 200      13.3731   64.9605        0.0
HOLE 400     -13.3731   13.3731        0.0
HOLE 400     -39.4843   13.3731        0.0
HOLE 400     -64.9605   13.3731        0.0
HOLE 400    -13.3731   39.4843        0.0
HOLE 400    -39.4843   39.4843        0.0
HOLE 400    -13.3731   64.9605        0.0
HOLE 600    -13.3731  -13.3731        0.0
HOLE 600    -39.4843  -13.3731        0.0
HOLE 600    -64.9605  -13.3731        0.0
HOLE 600    -13.3731  -39.4843        0.0
HOLE 600    -39.4843  -39.4843        0.0
HOLE 600    -13.3731  -64.9605        0.0
HOLE 800     13.3731  -13.3731        0.0
HOLE 800     39.4843  -13.3731        0.0
HOLE 800     64.9605  -13.3731        0.0
HOLE 800     13.3731  -39.4843        0.0
HOLE 800     39.4843  -39.4843        0.0
HOLE 800     13.3731  -64.9605        0.0
CYLINDER          2          1
 85.3313      0.2540        0.0
  CUBOID          3          1
 100.0   -100.0    100.0   -100.0     0.2540        0.0
```

Unit 34 is representative of a slice of the DSC through the space between the spacer disks in the active fuel region. This slice is only 0.1" high. All the holes modeled are representative of the cutouts in units 1-8. The cylinders represent the DSC thickness. Unit 77 is inserted as a hole four times to represent the support rods in the basket.

```
UNIT 34   COM='0.2540 CM HIGH SLICE THRU CASK AT MODERATOR'
  CYLINDER          3          1
     83.185      0.2540        0.0
  HOLE 2      13.3731   13.3731        0.0
  HOLE 2      39.4843   13.3731        0.0
  HOLE 2      64.9605  13.3731       0.0
  HOLE 2      13.3731   39.4843        0.0
  HOLE 2      39.4843   39.4843        0.0
  HOLE 2      13.3731   64.9605        0.0
  HOLE 4     -13.3731   13.3731        0.0
  HOLE 4     -39.4843   13.3731        0.0
  HOLE 4     -64.9605   13.3731        0.0
  HOLE 4    -13.3731   39.4843        0.0
  HOLE 4    -39.4843   39.4843        0.0
  HOLE 4    -13.3731   64.9605        0.0
  HOLE 6    -13.3731  -13.3731        0.0
  HOLE 6    -39.4843  -13.3731        0.0
  HOLE 6    -64.9605  -13.3731        0.0
  HOLE 6    -13.3731  -39.4843        0.0
  HOLE 6    -39.4843  -39.4843        0.0
  HOLE 6    -13.3731  -64.9605        0.0
  HOLE 8     13.3731  -13.3731        0.0
  HOLE 8     39.4843  -13.3731        0.0
  HOLE 8     64.9605  -13.3731        0.0
  HOLE 8     13.3731  -39.4843        0.0
  HOLE 8     39.4843  -39.4843        0.0
  HOLE 8     13.3731  -64.9605        0.0
  HOLE 77        60.833    34.7218        0.0
  HOLE 77       -60.833   -34.7218        0.0
  HOLE 77        60.833   -34.7218        0.0
  HOLE 77       -60.833    34.7218        0.0
  CYLINDER          2          1
   85.3313      0.2540        0.0
    CUBOID          3          1
   100.0   -100.0    100.0   -100.0     0.2540        0.0
```

Unit 134 is representative of a slice of the DSC through the space between the spacer disks in the plenum region. This slice is only 0.1" high. All the holes modeled are representative of the cutouts in units 100-800. The cylinders represent the DSC thickness. Unit 77 is inserted as a hole four times to represent the support rods in the basket.

```
UNIT 134 COM='0.2540 CM HIGH SLICE THRU CASK AT MODERATOR'
CYLINDER          3          1
   83.185      0.2540        0.0
HOLE 200      13.3731   13.3731        0.0
HOLE 200      39.4843   13.3731        0.0
HOLE 200      64.9605  13.3731       0.0
HOLE 200      13.3731   39.4843        0.0
HOLE 200      39.4843   39.4843        0.0
HOLE 200      13.3731   64.9605        0.0
HOLE 400     -13.3731   13.3731        0.0
HOLE 400     -39.4843   13.3731        0.0
HOLE 400     -64.9605   13.3731        0.0
HOLE 400    -13.3731   39.4843        0.0
HOLE 400    -39.4843   39.4843        0.0
HOLE 400    -13.3731   64.9605        0.0
HOLE 600    -13.3731  -13.3731        0.0
HOLE 600    -39.4843  -13.3731        0.0
HOLE 600    -64.9605  -13.3731        0.0
HOLE 600    -13.3731  -39.4843        0.0
HOLE 600    -39.4843  -39.4843        0.0
HOLE 600    -13.3731  -64.9605        0.0
HOLE 800     13.3731  -13.3731        0.0
HOLE 800     39.4843  -13.3731        0.0
HOLE 800     64.9605  -13.3731        0.0
HOLE 800     13.3731  -39.4843        0.0
HOLE 800     39.4843  -39.4843        0.0
HOLE 800     13.3731  -64.9605        0.0
HOLE 77        60.833    34.7218        0.0
HOLE 77       -60.833   -34.7218        0.0
HOLE 77        60.833   -34.7218        0.0
HOLE 77       -60.833    34.7218        0.0
CYLINDER          2          1
 85.3313      0.2540        0.0
  CUBOID          3          1
 100.0   -100.0    100.0   -100.0     0.2540        0.0
UNIT 36    COM='BOTTOM SLICE OF DSC (-8.67-0.0")'
  CYLINDER          2          1
  85.3313     22.0218        0.0
   CUBOID          3          1
  100.0   -100.0    100.0   -100.0     22.0218        0.0
```

Unit 37 is representative of a slice of the DSC through the space between the spacer disks in the location of the over sleeve in the active fuel region. This slice is only 0.1" high. All the holes modeled are representative of the cutouts in units 100-800. The cylinders represent the DSC thickness. Unit 77 is inserted as a hole four times to represent the support rods in the basket.

```
UNIT 37  COM='0.2540 CM HIGH SLICE THRU CASK AT MODERATOR WITH OVER SLEEVE'
  CYLINDER          3          1
     83.185      0.2540        0.0
  HOLE 1      13.3731   13.3731        0.0
  HOLE 1      39.4843   13.3731        0.0
  HOLE 2      64.9605  13.3731       0.0
  HOLE 1      13.3731   39.4843        0.0
  HOLE 2      39.4843   39.4843        0.0
  HOLE 2      13.3731   64.9605        0.0
  HOLE 3     -13.3731   13.3731        0.0
  HOLE 3     -39.4843   13.3731        0.0
  HOLE 4     -64.9605   13.3731        0.0
  HOLE 3    -13.3731   39.4843        0.0
  HOLE 4    -39.4843   39.4843        0.0
  HOLE 4    -13.3731   64.9605        0.0
  HOLE 5    -13.3731  -13.3731        0.0
  HOLE 5    -39.4843  -13.3731        0.0
```

```
HOLE 6    -64.9605  -13.3731        0.0
HOLE 5    -13.3731  -39.4843        0.0
HOLE 6    -39.4843  -39.4843        0.0
HOLE 6    -13.3731  -64.9605        0.0
HOLE 7     13.3731  -13.3731        0.0
HOLE 7     39.4843  -13.3731        0.0
HOLE 8     64.9605  -13.3731        0.0
HOLE 7     13.3731  -39.4843        0.0
HOLE 8     39.4843  -39.4843        0.0
HOLE 8     13.3731  -64.9605        0.0
HOLE 77        60.833    34.7218        0.0
HOLE 77       -60.833   -34.7218        0.0
HOLE 77        60.833   -34.7218        0.0
HOLE 77       -60.833    34.7218        0.0
CYLINDER           2          1
 85.3313      0.2540        0.0
  CUBOID           3          1
 100.0   -100.0    100.0   -100.0     0.2540        0.0
```

Unit 137 is representative of a slice of the DSC through the space between the spacer disks in the location of the over sleeve in the fuel rod plenum region. This slice is only 0.1" high. All the holes modeled are representative of the cutouts in units 100-800. The cylinders represent the DSC thickness. Unit 77 is inserted as a hole four times to represent the support rods in the basket.

```
UNIT 137 COM='0.2540 CM HIGH SLICE THRU CASK AT MODERATOR WITH OVER SLEEVE'
  CYLINDER           3          1
     83.185      0.2540        0.0
  HOLE 100      13.3731   13.3731        0.0
  HOLE 100      39.4843   13.3731        0.0
  HOLE 200      64.9605  13.3731       0.0
  HOLE 100      13.3731   39.4843        0.0
  HOLE 200      39.4843   39.4843        0.0
  HOLE 200      13.3731   64.9605        0.0
  HOLE 300     -13.3731   13.3731        0.0
  HOLE 300     -39.4843   13.3731        0.0
  HOLE 400     -64.9605   13.3731        0.0
  HOLE 300    -13.3731   39.4843        0.0
  HOLE 400    -39.4843   39.4843        0.0
  HOLE 400    -13.3731   64.9605        0.0
  HOLE 500    -13.3731  -13.3731        0.0
  HOLE 500    -39.4843  -13.3731        0.0
  HOLE 600    -64.9605  -13.3731        0.0
  HOLE 500    -13.3731  -39.4843        0.0
  HOLE 600    -39.4843  -39.4843        0.0
  HOLE 600    -13.3731  -64.9605        0.0
  HOLE 700     13.3731  -13.3731        0.0
  HOLE 700     39.4843  -13.3731        0.0
  HOLE 800     64.9605  -13.3731        0.0
  HOLE 700     13.3731  -39.4843        0.0
  HOLE 800     39.4843  -39.4843        0.0
  HOLE 800     13.3731  -64.9605        0.0
  HOLE 77        60.833    34.7218        0.0
  HOLE 77       -60.833   -34.7218        0.0
  HOLE 77        60.833   -34.7218        0.0
  HOLE 77       -60.833    34.7218        0.0
  CYLINDER           2          1
   85.3313      0.2540        0.0
    CUBOID           3          1
   100.0   -100.0    100.0   -100.0     0.2540        0.0
```

The following units model non-fuel rod regions and include moderator and disk spacer regions.

```
UNIT 52     COM='0.2540 CM SLICE THRU CASK, SLEEVE , (0.1")'
  CYLINDER           3          1
     83.185      0.2540        0.0
  HOLE 9       13.3731   13.3731        0.0
  HOLE 9       39.4843   13.3731        0.0
  HOLE 10      64.9605   13.3731        0.0
```

```
HOLE 9      13.3731   39.4843        0.0
HOLE 10     39.4843   39.4843        0.0
HOLE 10     13.3731   64.9605        0.0
HOLE 11    -13.3731   13.3731        0.0
HOLE 11    -39.4843   13.3731        0.0
HOLE 12    -64.9605   13.3731        0.0
HOLE 11    -13.3731   39.4843        0.0
HOLE 12    -39.4843   39.4843        0.0
HOLE 12    -13.3731   64.9605        0.0
HOLE 13    -13.3731  -13.3731        0.0
HOLE 13    -39.4843  -13.3731        0.0
HOLE 14    -64.9605  -13.3731        0.0
HOLE 13    -13.3731  -39.4843        0.0
HOLE 14    -39.4843  -39.4843        0.0
HOLE 14    -13.3731  -64.9605        0.0
HOLE 15     13.3731  -13.3731        0.0
HOLE 15     39.4843  -13.3731        0.0
HOLE 16     64.9605  -13.3731        0.0
HOLE 15     13.3731  -39.4843        0.0
HOLE 16     39.4843  -39.4843        0.0
HOLE 16     13.3731  -64.9605        0.0
HOLE 77        60.833    34.7218        0.0
HOLE 77       -60.833   -34.7218        0.0
HOLE 77        60.833   -34.7218        0.0
HOLE 77       -60.833    34.7218        0.0
CYLINDER          2          1
 85.3313      0.2540        0.0
  CUBOID          3          1
 100.0   -100.0    100.0   -100.0      0.2540        0.0
UNIT 53    COM='0.2540CM SLICE THRU CASK, SD, AND SLEEVE , (0.1")'
CYLINDER          4          1
   83.185      0.2540        0.0
HOLE 10      13.3731   13.3731        0.0
HOLE 10      39.4843   13.3731        0.0
HOLE 10      64.9605   13.3731        0.0
HOLE 10      13.3731   39.4843        0.0
HOLE 10      39.4843   39.4843        0.0
HOLE 10      13.3731   64.9605        0.0
HOLE 11     -13.3731   13.3731        0.0
HOLE 11     -39.4843   13.3731        0.0
HOLE 12     -64.9605   13.3731        0.0
HOLE 11     -13.3731   39.4843        0.0
HOLE 12     -39.4843   39.4843        0.0
HOLE 12     -13.3731   64.9605        0.0
HOLE 13     -13.3731  -13.3731        0.0
HOLE 13     -39.4843  -13.3731        0.0
HOLE 14     -64.9605  -13.3731        0.0
HOLE 13     -13.3731  -39.4843        0.0
HOLE 14     -39.4843  -39.4843        0.0
HOLE 14     -13.3731  -64.9605        0.0
HOLE 15      13.3731  -13.3731        0.0
HOLE 15      39.4843  -13.3731        0.0
HOLE 16      64.9605  -13.3731        0.0
HOLE 15      13.3731  -39.4843        0.0
HOLE 16      39.4843  -39.4843        0.0
HOLE 16      13.3731  -64.9605        0.0
CYLINDER          2          1
 85.3313      0.2540        0.0
  CUBOID          3          1
 100.0   -100.0    100.0   -100.0      0.2540        0.0
UNIT 70    COM='10.922 CM SLICE THRU CASK, SLEEVE (Flared), (4.3")'
CYLINDER          3          1
   83.185     10.922        0.0
HOLE 9       13.3731   13.3731        0.0
HOLE 9       39.4843   13.3731        0.0
HOLE 10      64.9605   13.3731        0.0
HOLE 9       13.3731   39.4843        0.0
HOLE 10      39.4843   39.4843        0.0
HOLE 10      13.3731   64.9605        0.0
HOLE 11     -13.3731   13.3731        0.0
HOLE 11     -39.4843   13.3731        0.0
```

```
  HOLE 12    -64.9605   13.3731        0.0
  HOLE 11    -13.3731   39.4843        0.0
  HOLE 12    -39.4843   39.4843        0.0
  HOLE 12    -13.3731   64.9605        0.0
  HOLE 13    -13.3731  -13.3731        0.0
  HOLE 13    -39.4843  -13.3731        0.0
  HOLE 14    -64.9605  -13.3731        0.0
  HOLE 13    -13.3731  -39.4843        0.0
  HOLE 14    -39.4843  -39.4843        0.0
  HOLE 14    -13.3731  -64.9605        0.0
  HOLE 15     13.3731  -13.3731        0.0
  HOLE 15     39.4843  -13.3731        0.0
  HOLE 16     64.9605  -13.3731        0.0
  HOLE 15     13.3731  -39.4843        0.0
  HOLE 16     39.4843  -39.4843        0.0
  HOLE 16     13.3731  -64.9605        0.0
  HOLE 78        60.833    34.7218        0.0
  HOLE 78       -60.833   -34.7218        0.0
  HOLE 78        60.833   -34.7218        0.0
  HOLE 78       -60.833    34.7218        0.0
  CYLINDER          2          1
   85.3313     10.922        0.0
    CUBOID          3          1
   100.0   -100.0    100.0   -100.0     10.922       0.0
UNIT 73    COM='11.5 CM HIGH SLICE THRU MOD, NON FUEL OR SLEEVE'
  CYLINDER          3          1
     83.185     11.506        0.0
  HOLE 79       60.833    34.7218        0.0
  HOLE 79      -60.833   -34.7218        0.0
  HOLE 79       60.833   -34.7218        0.0
  HOLE 79      -60.833    34.7218        0.0
  CYLINDER          2          1
   85.3313     11.506        0.0
    CUBOID          3          1
   100.0   -100.0    100.0   -100.0     11.506        0.0
UNIT 76    COM='TOP of DSC (25.5 cm)'
  CYLINDER          4          1
     83.185     25.5016        0.0
  CYLINDER          2          1
   85.3313     25.5016        0.0
    CUBOID          3          1
   100.0   -100.0    100.0   -100.0     25.5016        0.0
UNIT 77    COM='SUPPORT ROD, 0.635 CM HIGH'
  CYLINDER          4          1
      3.81     0.2540        0.0
UNIT 78    COM='SUPPORT ROD, 10.922 CM HIGH'
  CYLINDER          4          1
      3.81     10.922       0.0
UNIT 79    COM='SUPPORT ROD, 10.16 CM HIGH'
  CYLINDER          4          1
      3.81     10.16       0.0
```

Unit 90 is the global unit that contains the global array of 1586 units stacked to form the finite model of the DSC.

```
  GLOBAL UNIT 90
     ARRAY 2   -131.445   -131.445          0
END GEOM
READ ARRAY
```

Array 1 is a 15x15 array representative of the active fuel region of the design basis fuel assembly. Array 2 is a stack of 1586 slices constituting the KENO model. Array 3 is a 15x15 array representative of the plenum region of the fuel rods.

```
  COM='15x15 Zr-4 CLAD FUEL ASSEMBLY SLICE, FUEL REGIONS'
  ARA=1      NUX=15     NUY=15     NUZ=1
  FILL
      29  29  29  29  29  29  29  29  29  29  29  29  29  29  29
      29  29  29  29  29  29  29  29  29  29  29  29  29  29  29
      29  29  29  29  29  30  29  29  29  30  29  29  29  29  29
```

```
      29  29  29  30  29  29  29  29  29  29  29  30  29  29  29
      29  29  29  29  29  29  29  29  29  29  29  29  29  29  29
      29  29  30  29  29  30  29  29  29  30  29  29  30  29  29
      29  29  29  29  29  29  29  29  29  29  29  29  29  29  29
      29  29  29  29  29  29  29  31  29  29  29  29  29  29  29
      29  29  29  29  29  29  29  29  29  29  29  29  29  29  29
      29  29  30  29  29  30  29  29  29  30  29  29  30  29  29
      29  29  29  29  29  29  29  29  29  29  29  29  29  29  29
      29  29  29  30  29  29  29  29  29  29  29  30  29  29  29
      29  29  29  29  29  30  29  29  29  30  29  29  29  29  29
      29  29  29  29  29  29  29  29  29  29  29  29  29  29  29
      29  29  29  29  29  29  29  29  29  29  29  29  29  29  29
   END FILL
   COM='STACK 0.1" DISKS + NON UNIFORM REG. TO APPROXIMATE DSC BASKET'
   ARA=2       NUX=1       NUY=1       NUZ=1586
   FILL  36 55R34 20R33 206R37 20R33 191R34 20R33 191R34 20R33
         191R34 20R33 191R34 20R33 191R34 20R33 67R37 87R137 52R52
         20R53 70 73 76
   END FILL
   COM='15x15 Zr-4 CLAD FUEL ASSEMBLY SLICE, plenum REGIONS'
   ARA=3       NUX=15      NUY=15      NUZ=1
   FILL
      129 129 129 129 129 129 129 129 129 129 129 129 129 129 129
      129 129 129 129 129 129 129 129 129 129 129 129 129 129 129
      129 129 129 129 129 30  129 129 129 30  129 129 129 129 129
      129 129 129 30  129 129 129 129 129 129 30  129 129 129
      129 129 129 129 129 129 129 129 129 129 129 129 129 129 129
      129 129 30  129 129 30  129 129 129 30  129 129 30  129 129
      129 129 129 129 129 129 129 129 129 129 129 129 129 129 129
      129 129 129 129 129 129 129 31  129 129 129 129 129 129 129
      129 129 129 129 129 129 129 129 129 129 129 129 129 129 129
      129 129 30  129 129 30  129 129 129 30  129 129 30  129 129
      129 129 129 129 129 129 129 129 129 129 129 129 129 129 129
      129 129 129 30  129 129 129 129 129 129 129 30  129 129 129
      129 129 129 129 129 30  129 129 129 30  129 129 129 129 129
      129 129 129 129 129 129 129 129 129 129 129 129 129 129 129
      129 129 129 129 129 129 129 129 129 129 129 129 129 129 129
   END FILL
END ARRAY
READ START
   NST=1
END START
```

The model's boundary condition is specified as water albedo on surfaces.

```
READ BOUNDS
   all=water
END BOUNDS
READ PLOT
   TTL='CASK MATERIAL PLOT  - PLAN VIEW - bottom'
   PIC=MAT
   XUL=-131.4   YUL=131.4    ZUL=66.04
   XLR=131.4    YLR=-131.4   ZLR=66.04
   UAX=1.0    VDN=-1.0
   NAX=1000 LPI=10.0 END
   TTL='CASK MATERIAL PLOT  - FA#1'
   PIC=MAT
   XUL=0.0    YUL=28.0    ZUL=66.04
   XLR=28.0    YLR=0.0   ZLR=66.04
   UAX=1.0    VDN=-1.0
   NAX=1000 LPI=10 END
   TTL='CASK MATERIAL PLOT  - FA#3'
   PIC=MAT
   XUL=52.0    YUL=28.0    ZUL=66.04
   XLR=80.0    YLR=0.0     ZLR=66.04
   UAX=1.0    VDN=-1.0
   NAX=1000 LPI=10 END
   SCR=YES
   TTL='CASK MATERIAL PLOT  - PLAN VIEW - top'
   PIC=MAT
```

```
    XUL=-131.4    YUL=131.4     ZUL=372.5
    XLR=131.4     YLR=-131.4    ZLR=372.5
    UAX=1.0     VDN=-1.0
    NAX=1000 LPI=10.0 END
    TTL='CASK MATERIAL PLOT  - FA#5'
    PIC=MAT
    XUL=0.0     YUL=28.0     ZUL=372.5
    XLR=28.0     YLR=0.0    ZLR=372.5
    UAX=1.0     VDN=-1.0
    NAX=1000 LPI=10 END
    TTL='CASK MATERIAL PLOT  - FA#6'
    PIC=MAT
    XUL=52.0     YUL=28.0     ZUL=372.5
    XLR=80.0     YLR=0.0      ZLR=372.5
    UAX=1.0     VDN=-1.0
    NAX=1000 LPI=10 END
    SCR=YES
END PLOT
END DATA
END
```

Table **3.6-1**

NUHOMS®-24P DSC Dimensional Data (Worst Case Tolerances)

	inches	*cm*
Guide sleeve inside dimension	*8.93*	*22.6822*
Guide sleeve thickness	*0.1*	*0.2540*
Guide sleeve outside dimension	*9.13*	*23.1902*
Over sleeve thickness	*0.125*	*0.3175*
Over sleeve outside dimension	*9.38*	*23.8252*
Spacer disk hole inside dimension	*9.295 square*	*23.6093*
Minimum Ligaments (Location shown on Figure 3.6-3)	*1.21/0.96/0.71*	*3.0734/2.4384 /1.8034*

Table **3.6-2**

Criticality Results (with Water in Fuel-Cladding Gap and Without BPRA)

Moderator Density, g/cc	$k_{calculated}$	1σ	k_{eff}	*USL*
0.9982	*0.8317*	*0.0010*	*0.8337*	*0.9410*
0.9000	*0.8499*	*0.0010*	*0.8519*	*0.9410*
0.8000	*0.8668*	*0.0008*	*0.8684*	*0.9410*
0.7000	*0.8883*	*0.0010*	*0.8903*	*0.9410*
0.6000	*0.9084*	*0.0010*	*0.9104*	*0.9410*
0.5000	*0.9280*	*0.0010*	*0.9300*	*0.9410*
0.4000	*0.9339*	*0.0009*	*0.9357*	*0.9410*
0.3000	*0.9304*	*0.0010*	*0.9324*	*0.9410*
0.2000	*0.8880*	*0.0010*	*0.8900*	*0.9410*
0.1000	*0.7703*	*0.0009*	*0.7721*	*0.9410*
0.0001	*0.4526*	*0.0007*	*0.4540*	*0.9410*

Table **3.6-3**

Criticality Results (Water in Fuel-Cladding gap With BPRA)

Moderator Density, g/cc	$k_{calculated}$	1σ	k_{eff}	*USL*
0.9982	*0.8384*	*0.0008*	*0.8400*	*0.9410*
0.9000	*0.8512*	*0.0008*	*0.8528*	*0.9410*
0.8000	*0.8698*	*0.0010*	*0.8718*	*0.9410*
0.7000	*0.8879*	*0.0009*	*0.8897*	*0.9410*
0.6000	*0.9068*	*0.0009*	*0.9086*	*0.9410*
0.5000	*0.9231*	*0.0009*	*0.9249*	*0.9410*
0.4000	*0.9320*	*0.0009*	*0.9338*	*0.9410*
0.3000	*0.9271*	*0.0011*	*0.9293*	*0.9410*
0.2000	*0.8907*	*0.0009*	*0.8925*	*0.9410*
0.1000	*0.7779*	*0.0009*	*0.7797*	*0.9410*
0.0001	*0.4792*	*0.0006*	*0.4804*	*0.9410*

Table **3.6-4**

Criticality Results (Void in Fuel-Cladding Gap and Without BPRA)

Moderator Density, g/cc	$k_{calculated}$	1σ	k_{eff}	*USL*
0.9982	*0.8337*	*0.0009*	*0.8355*	*0.9410*
0.9000	*0.8509*	*0.0010*	*0.8529*	*0.9410*
0.8000	*0.8691*	*0.0009*	*0.8709*	*0.9410*
0.7000	*0.8871*	*0.0009*	*0.8889*	*0.9410*
0.6000	*0.9057*	*0.0009*	*0.9075*	*0.9410*
0.5000	*0.9188*	*0.0010*	*0.9208*	*0.9410*
0.4000	*0.9276*	*0.0009*	*0.9294*	*0.9410*
0.3000	*0.9172*	*0.0009*	*0.9190*	*0.9410*
0.2000	*0.8705*	*0.0012*	*0.8729*	*0.9410*
0.1000	*0.7357*	*0.0008*	*0.7373*	*0.9410*
0.0001	*0.3754*	*0.0005*	*0.3764*	*0.9410*

Table **3.6-5**

Criticality Results (Void in Fuel-Cladding Gap and With BPRA)

Moderator Density, g/cc	$k_{calculated}$	1σ	k_{eff}	*USL*
0.9982	*0.8336*	*0.0011*	*0.8358*	*0.9410*
0.9000	*0.8485*	*0.0011*	*0.8507*	*0.9410*
0.8000	*0.8648*	*0.0010*	*0.8668*	*0.9410*
0.7000	*0.8821*	*0.0009*	*0.8839*	*0.9410*
0.6000	*0.9042*	*0.0010*	*0.9062*	*0.9410*
0.5000	*0.9180*	*0.0010*	*0.9200*	*0.9410*
0.4000	*0.9252*	*0.0010*	*0.9272*	*0.9410*
0.3000	*0.9135*	*0.0009*	*0.9153*	*0.9410*
0.2000	*0.8685*	*0.0010*	*0.8705*	*0.9410*
0.1000	*0.7415*	*0.0009*	*0.7433*	*0.9410*
0.0001	*0.4047*	*0.0006*	*0.4059*	*0.9410*

Table 3.6-6

Benchmarking Results

Run ID	U Enrich. Wt%	Pu Enrich. Wt%	Pitch (cm)	H_2O/fuel volume	Separation of assemblies (cm)	AEG	k_{eff}	1σ
B1645SO1	2.46		1.41	1.015		32.8194	0.9967	0.0009
B1645SO2	2.46		1.41	1.015		32.7584	1.0002	0.0011
BW1231B1	4.02		1.511	1.139		31.1427	0.9966	0.0012
BW1231B2	4.02		1.511	1.139		29.8854	0.9972	0.0009
BW1273M	2.46		1.511	1.376		32.2106	0.9965	0.0009
BW1484A1	2.46		1.636	1.841	1.636	34.5304	0.9962	0.0010
BW1484A2	2.46		1.636	1.841	4.908	35.1629	0.9931	0.0010
BW1484B1	2.46		1.636	1.841		33.9421	0.9979	0.0010
BW1484B2	2.46		1.636	1.841	1.636	34.5820	0.9955	0.0012
BW1484B3	2.46		1.636	1.841	4.908	35.2609	0.9969	0.0011
BW1484C1	2.46		1.636	1.841	1.636	34.6463	0.9931	0.0011
BW1484C2	2.46		1.636	1.841	4.908	35.2422	0.9939	0.0012
BW1484S1	2.46		1.636	1.841	1.636	34.5105	1.0001	0.0010
BW1484S2	2.46		1.636	1.841	1.636	34.5569	0.9992	0.0010
BW1484SL	2.46		1.636	1.841	6.544	35.4151	0.9935	0.0011
BW1645S1	2.46		1.209	0.383	1.778	30.1040	0.9990	0.0010
BW1645S2	2.46		1.209	0.383	1.778	29.9961	1.0037	0.0011
BW1810A	2.46		1.636	1.841		33.9465	0.9984	0.0008
BW1810B	2.46		1.636	1.841		33.9631	0.9984	0.0009
BW1810C	2.46		1.636	1.841		33.1569	0.9992	0.0010
BW1810D	2.46		1.636	1.841		33.0821	0.9985	0.0013
BW1810E	2.46		1.636	1.841		33.1600	0.9988	0.0009
BW1810F	2.46		1.636	1.841		33.9556	1.0031	0.0011
BW1810G	2.46		1.636	1.841		32.9409	0.9973	0.0011
BW1810H	2.46		1.636	1.841		32.9420	0.9972	0.0011
BW1810I	2.46		1.636	1.841		33.9655	1.0037	0.0009
BW1810J	2.46		1.636	1.841		33.1403	0.9983	0.0011
DSN399-1	4.74		1.6	3.807	1.8	33.9520	1.0036	0.0015
DSN399-2	4.74		1.6	3.807	5.8	34.4207	0.9989	0.0016
DSN399-3	4.74		1.6	3.807		35.3140	1.0024	0.0015
DSN399-4	4.74		1.6	3.807		35.3784	0.9977	0.0013
EPRU65	2.35		1.562	1.196		33.9106	0.9960	0.0011
EPRU65B	2.35		1.562	1.196		33.4013	0.9993	0.0012
EPRU75	2.35		1.905	2.408		35.8671	0.9958	0.0010
EPRU75B	2.35		1.905	2.408		35.3043	0.9996	0.0010
EPRU87	2.35		2.21	3.687		36.6129	1.0007	0.0011
EPRU87B	2.35		2.21	3.687		36.3499	1.0007	0.0011
NSE71SQ	4.74		1.26	1.823		33.7610	0.9979	0.0012
NSE71W1	4.74		1.26	1.823		34.0129	0.9988	0.0013
NSE71W2	4.74		1.26	1.823		36.3037	0.9957	0.0010
P2438BA	2.35		2.032	2.918	5.05	36.2277	0.9979	0.0013
P2438SLG	2.35		2.032	2.918	8.39	36.2889	0.9986	0.0012
P2438SS	2.35		2.032	2.918	6.88	36.2705	0.9974	0.0011
P2438ZR	2.35		2.032	2.918	8.79	36.2840	0.9987	0.0010
P2615BA	4.31		2.54	3.883	6.72	35.7286	1.0019	0.0014
P2615SS	4.31		2.54	3.883	8.58	35.7495	0.9952	0.0015
P2615ZR	4.31		2.54	3.883	10.92	35.7700	0.9977	0.0014
P2827L1	2.35		2.032	2.918	13.27	36.2526	1.0057	0.0011
P2827L2	2.35		2.032	2.918	11.25	36.2908	0.9999	0.0012

Table 3.6-6

Benchmarking Results, continued

Run ID	U Enrich. Wt%	Pu Enrich. Wt%	Pitch (cm)	H_2O/fuel volume	Separation of assemblies (cm)	AEG	k_{eff}	1σ
P2827L3	4.31		2.54	3.883	20.78	35.6766	1.0092	0.0012
P2827L4	4.31		2.54	3.883	19.04	35.7131	1.0073	0.0012
P2827SLG	2.35		2.032	2.918	8.31	36.3037	0.9957	0.0010
P3314BA	4.31		1.892	1.6	2.83	33.1881	0.9988	0.0012
P3314BC	4.31		1.892	1.6	2.83	33.2284	0.9992	0.0012
P3314BF1	4.31		1.892	1.6	2.83	33.2505	1.0037	0.0013
P3314BF2	4.31		1.892	1.6	2.83	33.2184	1.0009	0.0013
P3314BS1	2.35		1.684	1.6	3.86	34.8594	0.9956	0.0013
P3314BS2	2.35		1.684	1.6	3.46	34.8356	0.9949	0.0010
P3314BS3	4.31		1.892	1.6	7.23	33.4247	0.9970	0.0013
P3314BS4	4.31		1.892	1.6	6.63	33.4162	0.9998	0.0012
P3314SLG	4.31		1.892	1.6	2.83	34.0198	0.9974	0.0012
P3314SS1	4.31		1.892	1.6	2.83	33.9601	0.9999	0.0012
P3314SS2	4.31		1.892	1.6	2.83	33.7755	1.0022	0.0012
P3314SS3	4.31		1.892	1.6	2.83	33.8904	0.9992	0.0013
P3314SS4	4.31		1.892	1.6	2.83	33.7625	0.9958	0.0011
P3314SS5	2.35		1.684	1.6	7.8	34.9531	0.9949	0.0013
P3314SS6	4.31		1.892	1.6	10.52	33.5333	1.0020	0.0011
P3314W1	4.31		1.892	1.6		34.3994	1.0024	0.0013
P3314W2	2.35		1.684	1.6		35.2167	0.9969	0.0011
P3314ZR	4.31		1.892	1.6	2.83	33.9954	0.9971	0.0013
P3602BB	4.31		1.892	1.6	8.3	33.3221	1.0029	0.0013
P3602BS1	2.35		1.684	1.6	4.8	34.7750	1.0027	0.0012
P3602BS2	4.31		1.892	1.6	9.83	33.3679	1.0039	0.0012
P3602N11	2.35		1.684	1.6	8.98	34.7438	1.0023	0.0012
P3602N12	2.35		1.684	1.6	9.58	34.8391	1.0030	0.0012
P3602N13	2.35		1.684	1.6	9.66	34.9337	1.0013	0.0012
P3602N14	2.35		1.684	1.6	8.54	35.0282	0.9974	0.0013
P3602N21	2.35		2.032	2.918	11.2	36.2821	0.9987	0.0011
P3602N22	2.35		2.032	2.918	10.36	36.1896	1.0025	0.0011
P3602N31	4.31		1.892	1.6	14.87	33.2094	1.0057	0.0013
P3602N32	4.31		1.892	1.6	15.74	33.3067	1.0093	0.0012
P3602N33	4.31		1.892	1.6	15.87	33.4174	1.0107	0.0012
P3602N34	4.31		1.892	1.6	15.84	33.4683	1.0045	0.0013
P3602N35	4.31		1.892	1.6	15.45	33.5185	1.0013	0.0012
P3602N36	4.31		1.892	1.6	13.82	33.5855	1.0004	0.0014
P3602N41	4.31		2.54	3.883	12.89	35.5276	1.0109	0.0013
P3602N42	4.31		2.54	3.883	14.12	35.6695	1.0071	0.0014
P3602N43	4.31		2.54	3.883	12.44	35.7542	1.0053	0.0015
P3602SS1	2.35		1.684	1.6	8.28	34.8701	1.0025	0.0013
P3602SS2	4.31		1.892	1.6	13.75	33.4202	1.0035	0.0012
P3926L1	2.35		1.684	1.6	10.06	34.8519	1.0000	0.0011
P3926L2	2.35		1.684	1.6	10.11	34.9324	1.0017	0.0011
P3926L3	2.35		1.684	1.6	8.5	35.0641	0.9949	0.0012
P3926L4	4.31		1.892	1.6	17.74	33.3243	1.0074	0.0014
P3926L5	4.31		1.892	1.6	18.18	33.4074	1.0057	0.0013
P3926L6	4.31		1.892	1.6	17.43	33.5246	1.0046	0.0013
P3926SL1	2.35		1.684	1.6	6.59	33.4737	0.9995	0.0012
P3926SL2	4.31		1.892	1.6	12.79	33.5776	1.0007	0.0012

Table 3.6-6

Benchmarking Results,, continued

Run ID	U Enrich. Wt%	Pu Enrich. Wt%	Pitch (cm)	H_2O/fuel volume	Separation of assemblies (cm)	AEG	k_{eff}	1σ
P4267B1	4.31		1.8901	1.59		31.8075	0.9990	0.0010
P4267B2	4.31		0.89	1.59		31.5323	1.0033	0.0010
P4267B3	4.31		1.715	1.09		30.9905	1.0050	0.0011
P4267B4	4.31		1.715	1.09		30.5061	0.9996	0.0011
P4267B5	4.31		1.715	1.09		30.1011	1.0004	0.0011
P4267SL1	4.31		1.89	1.59		33.4737	0.9995	0.0012
P4267SL2	4.31		1.715	1.09		31.9460	0.9988	0.0016
P62FT231	4.31		1.891	1.6	5.19	32.9196	1.0012	0.0013
P71F14F3	4.31		1.891	1.6	5.19	32.8237	1.0009	0.0014
P71F14V3	4.31		1.891	1.6	5.19	32.8597	0.9972	0.0014
P71F14V5	4.31		1.891	1.6	5.19	32.8609	0.9993	0.0013
P71F214R	4.31		1.891	1.6	5.19	32.8778	0.9969	0.0012
PAT80L1	4.74		1.6	3.807	4.9	35.0253	1.0012	0.0012
PAT80L2	4.74		1.6	3.807	4.9	35.1136	0.9993	0.0015
PAT80SS1	4.74		1.6	3.807	4.9	35.0045	0.9988	0.0013
PAT80SS2	4.74		1.6	3.807	4.9	35.1072	0.9960	0.0013
W3269A	5.7		1.422	1.93		33.1480	0.9988	0.0012
W3269B1	3.7		1.105	1.432		32.4055	0.9961	0.0011
W3269B2	3.7		1.105	1.432		32.3921	0.9963	0.0011
W3269B3	3.7		1.105	1.432		32.2363	0.9944	0.0011
W3269C	2.72		1.524	1.494		33.7727	0.9989	0.0012
W3269SL1	2.72		1.524	1.494		33.3850	0.9981	0.0014
W3269SL2	5.7		1.422	1.93		33.0910	1.0005	0.0013
W3269W1	2.72		1.524	1.494		33.5114	0.9966	0.0014
W3269W2	5.7		1.422	1.93		33.1680	1.0014	0.0014
W3385SL1	5.74		1.422	1.932		33.2387	1.0009	0.0012
W3385SL2	5.74		2.012	5.067		35.8818	0.9997	0.0013
EPRI70UN	0.71	2	1.778	1.2		31.6775	0.9983	0.0012
EPRI70B	0.71	2	1.778	1.2		30.9021	1.0009	0.0012
EPRI87UN	0.71	2	2.2098	2.53		33.3230	1.0096	0.0011
EPRI87B	0.71	2	2.2098	2.53		31.6775	0.9983	0.0012
EPRI99UN	0.71	2	2.5146	3.64		35.1817	1.0063	0.0011
EPRI99B	0.71	2	2.5146	3.64		34.4098	1.0095	0.0011
SAXTON52	0.71	6.6	1.3208	1.68		30.2980	1.0020	0.0014
SAXTON56	0.71	6.6	1.4224	2.16		31.4724	1.0010	0.0014
SAXTON56B	0.71	6.6	1.4224	2.16		31.0038	0.9994	0.0013
SAXTN735	0.71	6.6	1.8669	4.7		34.1848	1.0007	0.0016
SATN792	0.71	6.6	2.01168	5.67		34.6401	1.0026	0.0013
SAXTN104	0.71	6.6	2.6416	10.75		35.8333	1.0054	0.0014
Correlation	0.31	-0.26	0.43	0.25	0.65	-0.01	N/A	N/A

Table 3.3.6-7

USL-1 Results

Parameter	*Range of applicability*	*USL-1*
U Enrichment (wt. % U-235)	*2.4* *2.8* *3.3* *3.8 – 5.7*	*0.9424* *0.9430* *0.9435* *0.9438*
Fuel Rod Pitch (cm)	*0.89* *1.1* *1.4* *1.6* *1.9 – 2.6*	*0.9396* *0.9408* *0.9421* *0.9433* *0.9439*
Water/Fuel Volume Ratio	*0.38* *1.9* *3.3 – 11*	*0.9414* *0.9425* *0.9426*
Assembly Separation (cm)	*1.6* *4.4* *7.1* *9.8 – 21*	*0.9410* *0.9425* *0.9440* *0.9441*
Average Energy Group Causing Fission (AEG)	*30 – 37*	*0.9433*

Table 3.3.6-8

USL Determination for Criticality Analysis

Parameter	*Value from Limiting Analysis*	*Bounding USL-1*
U Enrichment (wt. % U-235)	*4.0*	*0.9438*
Fuel Rod Pitch (cm)	*1.4427*	*0.9421*
Water/Fuel Ratio	*1.663*	*0.9414*
Assembly Separation (cm)	*1.80 – 3.07*	*0.9410*
Average Energy Group Causing Fission (AEG)	*33*	*0.9444*

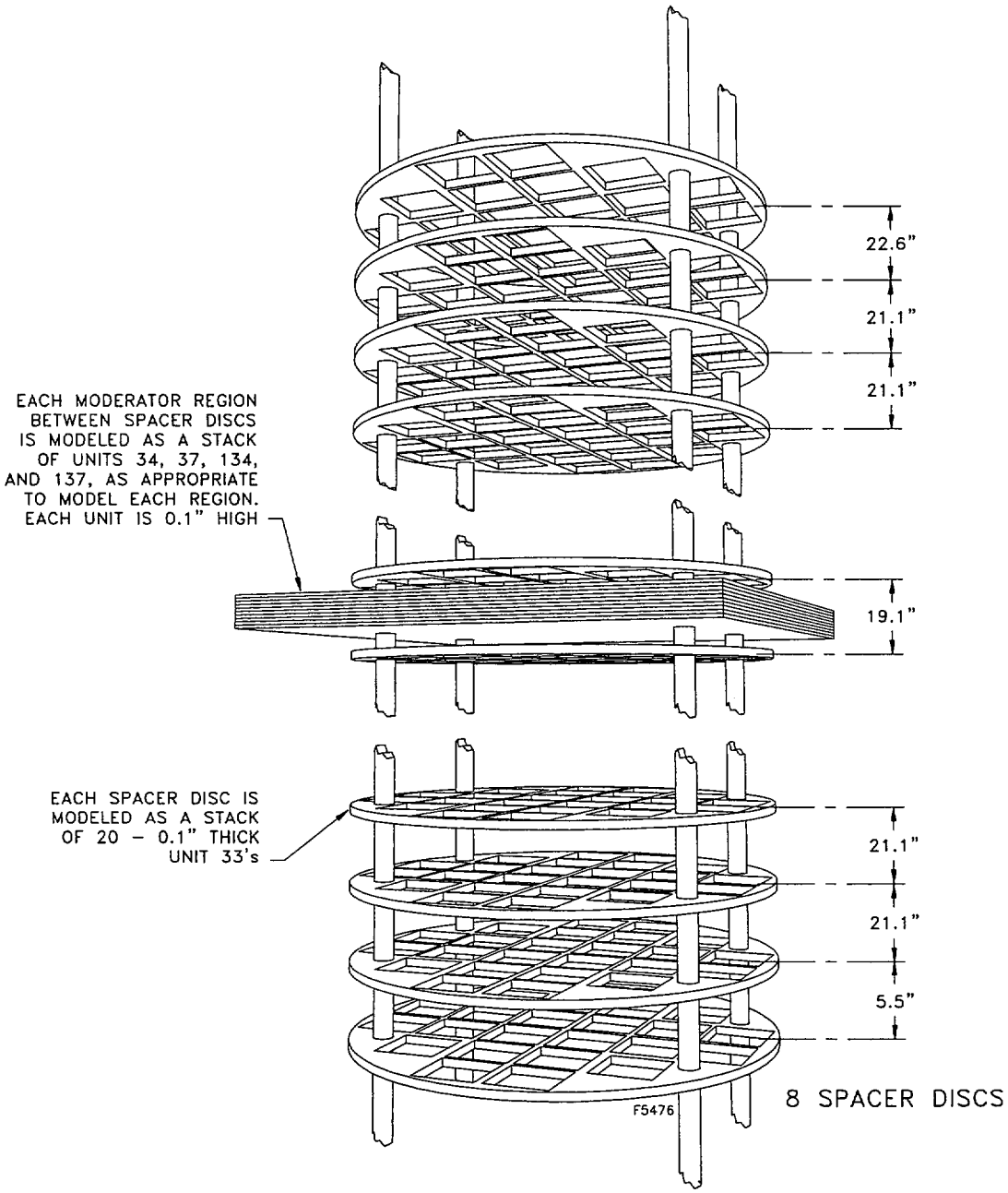

Figure 3.6-1

<u>KENO Model of the DSC Basket</u>

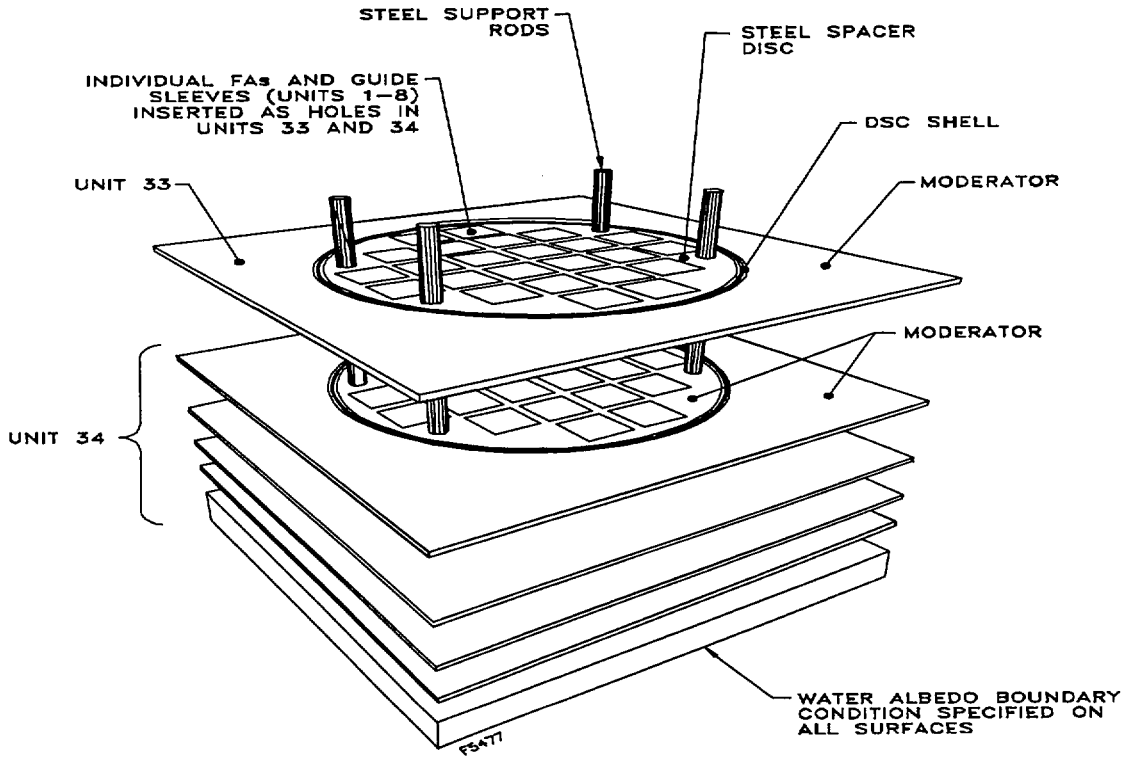

Figure 3.6-2

Exploded View of the KENO Model

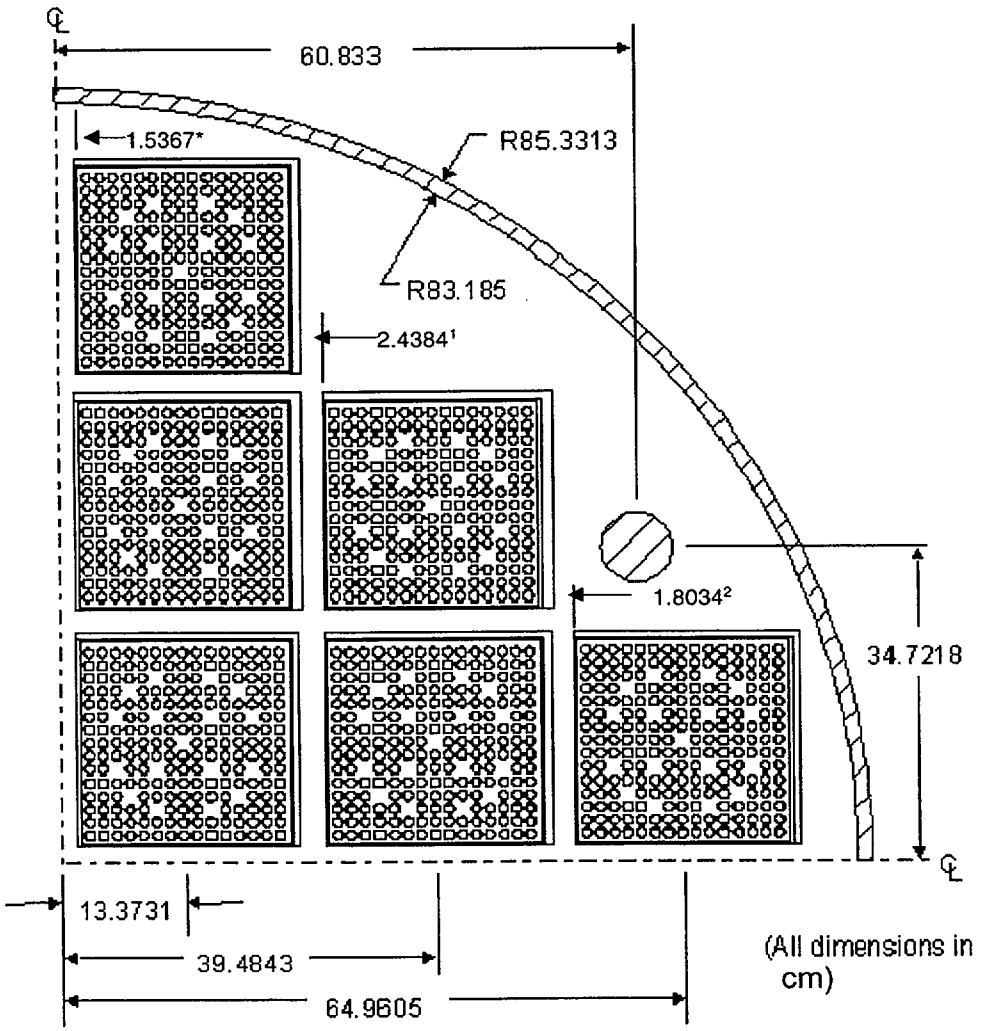

* ½ of the center most spacer disk ligament.
[1] middle spacer disk ligament thickness
[2] outer most spacer disk ligament thickness

Figure 3.6 -3

DSC Geometry

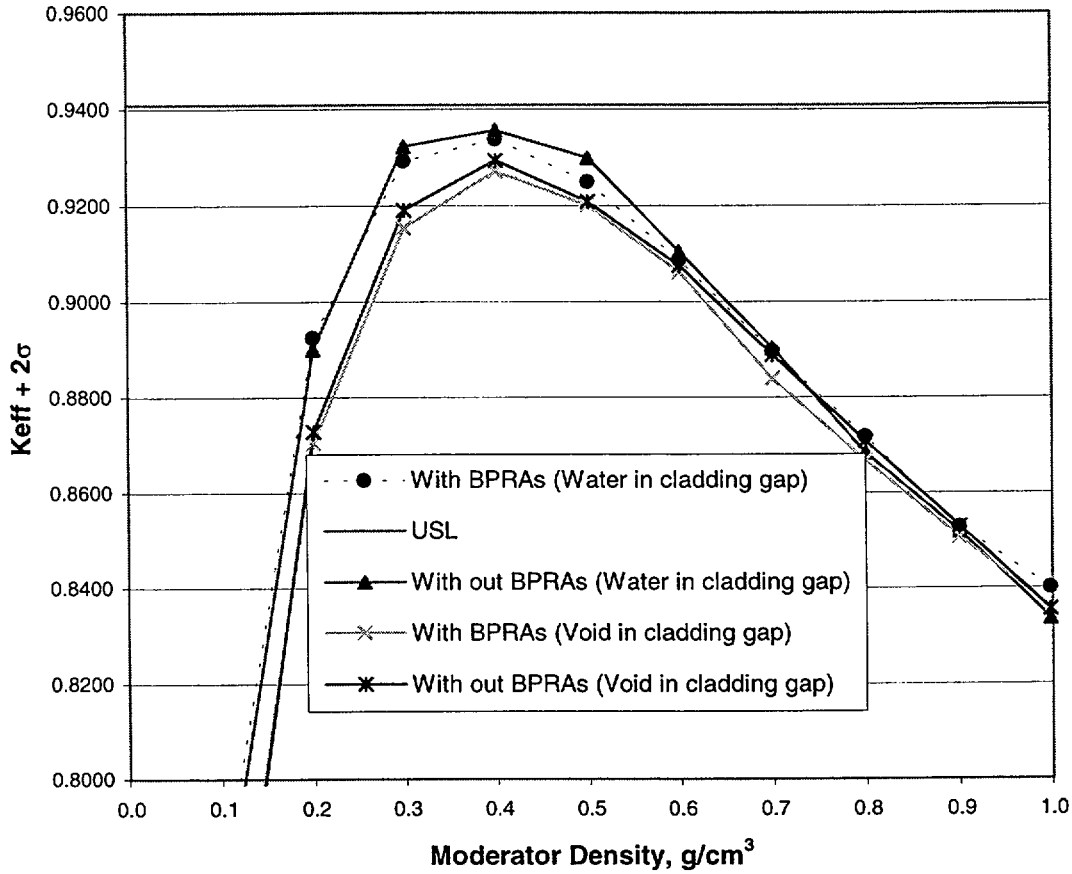

Figure 3.6-4

Criticality Results

3.7 References

3.70 *Transnuclear West Report / Project No.: SCE-01.0602, "Verification and Validation Document: SCALE 4.4 PC; CSAS25 For Uranium Oxide and Uranium Plutonium Mixed Oxide (MOX) Fuel", Revision 0.*

3.71 *"SCALE: A Modular Code System for Performing Standardized Computer Analyses for Licensing Evaluations for Workstations and Personal Computers," Oak Ridge National Laboratory, NUREG/CR-0200, Revision 6, (ORNL/NUREG/CSD-2/V2/R6.(SCALE 4.4).*

3.72 *U. S. Nuclear Regulatory Commission, Office of Nuclear Materials Safety and Safeguards, "Safety Evaluation Report of VECTRA Technologies, Inc., a.k.a Pacific Nuclear Services, Inc., Safety Analysis Report for the Standardized NUHOMS® Horizontal Modular Storage System for Irradiated Nuclear Fuel," December 1994 (Docket 72-1004).*

J.4 Thermal Evaluation

J.4.1 Discussion

The fuel qualification tables for the PWR fuel were adjusted for the inclusion of BPRAs, which generate a small amount of heat during transfer and storage in the NUHOMS® system. No recalculation of any thermal analysis was necessary to qualify the BPRAs as discussed in the following subsections. However, the pressure analysis is amended to analyze the BPRAs, which add gas during normal, off-normal, and accident conditions. The pressure analysis assumes intact BPRAs are loaded into the DSC. Failed BPRAs loaded in the DSC will have less available gas for release, therefore reducing the internal DSC pressures as compared to the case with intact BPRAs.

J.4.2 Summary of Thermal Properties of Materials

The only thermal property potentially affected by the addition of BPRAs is the effective conductivity of the fuel assemblies used in the thermal analysis. The effect of the addition of BPRAs will slightly increase the effective conductivity due to the addition of conduction paths and surface area available for radiation; however, no credit is taken for their presence.

J.4.3 Technical Specifications of Components

Refer to Section J.5 for the type of BPRA assemblies being considered. The BPRA assemblies generate a maximum 8 watts per BPRA of heat during transfer and storage operations in the NUHOMS® system, as calculated in Section J.5 of this appendix.

J.4.4 Thermal Evaluation for Normal and Off-Normal Conditions

Decay Heat

The addition of the BPRA components adds a small amount of decay heat to the fuel assemblies, which needs to be addressed. The maximum heat generation of the BPRA components is calculated to be 8 watts, as described in Section J.5.2. A new fuel qualification table (Table *1-2c of Fuel Specification 1.2.1*) has been added to address the addition of the heat generated by the BPRAs. The same methodology as presented in Chapter 8 of the SAR is used. The total decay heat of each assembly is taken to be that generated by the fuel plus the decay heat generated by the BPRAs. The criteria for fuel cladding temperature limit remains the same, but the allowable decay heat from the fueled rods in an assembly is reduced by 8 watts to accommodate the BPRAs. Therefore, the results from Chapter 8 of the SAR for normal and off-normal conditions remain valid for the maximum design basis decay heat of 1 kW per assembly, including the BPRA contribution.

Thermal Expansion

As described in SAR section 8.1.1.3B, adequate space is provided in the 24P standard DSC cavity between the basket assembly and the shield plug assemblies for free thermal expansion. To verify that for the 24P long cavity DSC adequate provision for free axial expansion of the spent fuel assemblies and other internal components of the basket is included, the differential expansion of each DSC component is calculated using the methodology described in SAR section 8.1.1.3B. The –40° F ambient condition for PWR fuel inside the long cavity DSC represents the worst case for differential thermal growth situation analyzed.

For fuel assemblies with BPRAs, using a maximum unirradiated initial length of 171.71 inch and a maximum burnup of 45,000 MWd/MTU, the calculated hot length of fuel assembly is 172.061 inch. Using a minimum cold length value of 172.94 inch for the 24P long cavity DSC, the calculated hot length of the DSC cavity is 173.046 inch. Hence the clearance available for irradiation growth at hot conditions is 0.985 inch (173.046 – 172.061). Taking thermal expansion of Zircalloy into consideration, the minimum cold clearance available to accommodate irradiation growth is 0.983 inch..

For fuel assemblies with BPRAs which are 0.25 inch longer (a maximum unirradiated initial length of 171.96 inch), the corresponding maximum burnup is determined to be 32,000 MWd/MTU, and the minimum cold clearance available to accommodate irradiation growth is 0.733 inch (0.983 –0.250).

The thermal expansion between the basket assembly components and the DSC shell in the radial direction remains bounded by the analysis presented in SAR section 8.1.1.3B.