Tennessee Valley Authority, Post Office Box 2000, Spring City, Tennessee 37381-2000

FEB 2 1 2001

10 CFR 50.55a

U.S. Nuclear Regulatory Commission
ATTN: Document Control Desk
Washington, D. C. 20555

Gentlemen:

In the Matter of)
Tennessee Valley Authority)

Docket No.50-390

WATTS BAR NUCLEAR PLANT (WBN) UNIT 1 - AMERICAN SOCIETY OF MECHANICAL ENGINEERS (ASME) SECTION XI, INSERVICE INSPECTION (ISI) PROGRAM RELIEF REQUEST 1-ISI-07 THROUGH 1-ISI-12

The purpose of this letter is to request relief from ASME Section XI Code requirements which were identified in the Unit 1 Cycle 3 refueling outage.

TVA committed in the ASME Section XI ISI Summary Report - Third Refueling Cycle, dated December 5, 2000, to submit six relief requests for ISI components examined during that inspection because 100 percent Code coverage could not be achieved. The required examination coverage could not be obtained. The required examination was performed to the extent practical within the design limitations of each component. Because conformance to the code requirement is impractical to implement due to design restrictions, relief is being requested in accordance with 10 CFR 50.55a(g)(5)(iii).

Enclosure 1 provides the request for relief, 1-ISI-07, concerning the centrifugal charging pump integrally welded attachments. Enclosure 2 provides the request for relief, 1-ISI-08, for the steam generator 1 nozzle-to-safe end welds. Enclosure 3 provides the request for relief, 1-ISI-09, for the residual heat exchanger shell-to-flange weld. Enclosure 4

A047

Printed on recycled paper

provides the relief request, 1-ISI-10, for the boron injection tank integrally welded attachments. Enclosure 5 provides the relief request, 1-ISI-11, for the boron injection tank shell-to-head welds. Enclosure 6 provides the relief request, 1-ISI-12, for the boron injection tank nozzle-to-vessel welds. Supporting material is provided in the attachments to each of the enclosures.

Enclosure 7 provides the TVA procedure N-GP-28, "Calculation of ASME Code Coverage for Section XI NDE Examinations." This procedure was used to calculate the code coverage achieved for each component examined.

If you have any questions concerning the above relief request, please contact me at (423) 365-1824.

Sincerely,

P. L. Pace
Manager, Site Licensing
and Industry Affairs

Enclosures
cc (Enclosures):

NRC Resident Inspector
Watts Bar Nuclear Plant
1260 Nuclear Plant Road
Spring City, Tennessee 37381

Mr. L. Mark Padovan, Senior Project Manager
U.S. Nuclear Regulatory Commission
One White Flint North
11555 Rockville Pike
Rockville, Maryland 20852

U.S. Nuclear Regulatory Commission
Region II
Sam Nunn Atlanta Federal Center
61 Forsyth St., SW, Suite 23T85
Atlanta, Georgia 30303

ENCLOSURE 1

WATTS BAR NUCLEAR PLANT UNIT 1
INSERVICE INSPECTION PROGRAM
REQUEST FOR RELIEF 1-ISI-07

ENCLOSURE 1

WATTS BAR NUCLEAR PLANT UNIT 1
FIRST 10-YEAR INTERVAL
REQUEST FOR RELIEF, 1-ISI-07

SUMMARY:

This request for relief addresses integrally welded attachments on Centrifugal Charging Pump 1A-A. The design configuration of the subject attachment welds precludes 100% surface examination of the required area for the weld CCPH-1A-A-IA (four integrally welded lug attachments to the pump casing). A liquid penetrant surface examination was performed on accessible areas to the maximum extent practical, given the physical limitations of the subject welds. The design configuration limits surface examination to approximately 84% of integrally welded attachments CCPH-1A-A-IA.

A similar physical limitation was experienced at TVA's Sequoyah Nuclear Plant. Requests for Relief (1-ISI-12 and 2-ISI-12) were granted by the NRC in a letter dated September 12, 2000.

Therefore, pursuant to 10 CFR 50.55a(g)(5)(iii), it is requested that relief be granted for the first inspection interval.

I. COMPONENT:

Centrifugal Charging Pump Integrally Welded Attachment Reference ISI drawing ISI-0118-C-01, (Attachment 1) identifier CCPH-1A-A-IA.

II. CODE REQUIREMENT:

Code Case N-509, Table 2500-1, Examination Category C-C, Item Number C3.30, requires Surface Examination.

III. CODE REQUIREMENTS FROM WHICH RELIEF IS REQUESTED:

Surface Examination Coverage of Essentially 100% of Integrally Welded Attachments as defined in Figure 2500-5 (Attachment 2).

IV. BASIS FOR RELIEF:

The design configuration of the centrifugal charging pump and integrally welded attachments, precludes a surface examination of the required area of the integrally welded attachments to CCPH-1A-A-IA. The design configuration limits surface examination to approximately 84% of the required examination area.

V. ALTERNATIVE EXAMINATION:

A liquid penetrant examination was performed on accessible areas to the extent practical given the physical limitations of the subject integrally welded attachments.

VI. JUSTIFICATION FOR THE GRANTING OF RELIEF:

The design configuration of the integrally welded attachments precludes surface examination of essentially 100% of the required examination area. Reference Examination Report R-0569 (Attachment 3) for location and sketch of inaccessible area. In order to examine the welds in accordance with the code requirement, the centrifugal charging pump would require extensive redesign and modification to allow access to the bottom side of the attachment lugs. Connecting piping would have to be disconnected and the pump disassembled and lifted to allow access to the remaining 16% examination area. The weld joint detail consists of a full penetration weld with fillet weld reinforcement. The attachment is welded all around with a fillet weld. The bottom side of the attachment is inaccessible due to a support which bolts the pump to the supporting frame. The total surface examination coverage for integral attachment welds CCPH-1A-A-IA was approximately 84% of the required code coverage. Other NDE techniques were considered; but, due to the location of the inaccessible area, the same limitations would be encountered.

Performing a surface examination of essentially 100% of the required area of integrally welded attachments CCPH-1A-A-IA would be impractical. In addition, it is impractical to perform other NDE examinations. The maximum extent practical surface examination of the weld area and adjacent metal of the subject weld provides reasonable assurance of an acceptable level of quality and safety. Significant degradation, if present, would have been detected during the surface examination that was performed on the subject integrally welded attachments. As a result, assurance of structural integrity for the integrally welded attachments is provided by the examination that was performed.

Therefore, pursuant to 10 CFR 50.55a(g)(5)(iii), it is requested that relief be granted for the first inspection interval.

VII. IMPLEMENTATION SCHEDULE:

This Request for Relief is applicable to WBN's first inspection interval.

ENCLOSURE 1

WATTS BAR NUCLEAR PLANT UNIT 1
FIRST 10-YEAR INTERVAL
REQUEST FOR RELIEF, 1-ISI-07

Attachment 1	ISI Drawing ISI-0118-C-01
Attachment 2	ASME Section XI, 1989 Edition, Figure IWC-2500-5
Attachment 3	Examination Report R-0569

ENCLOSURE 1
ATTACHMENT 1

REQUEST FOR RELIEF, 1-ISI-07
ISI DRAWING ISI-0118-C-01

REFERENCE DRAWINGS
VENDOR TECHNICAL MANUAL
WBN-VTM-W120-0010

MATERIAL SPECIFICATIONS

PUMP CASING
SA 182 F 304

ASME CC-2 (EQUIVALENT)

2

NOTES:

1. THE PUMP FEET ARE BOLTED TO A COMMON SUPPORT.
2. THE PUMP FEET ARE INTEGRALLY WELDED TO THE CASING AND IDENTIFIED WITH A COMMON ID.
3. NOZZLE WELDS SHOWN ON PIPING WELD LOCATION DRAWING 1SI-0375-C-17
4. THIS DRAWING MAY NOT REPRESENT THE TRUE CONFIGURATION. REFER TO THE REFERENCED DRAWINGS FOR SPECIFIC DETAILS.

2

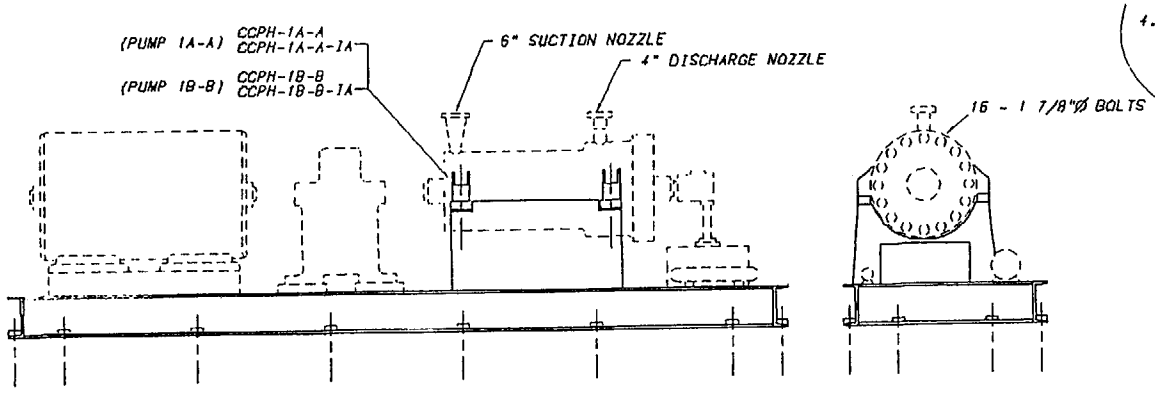

REV	BY	CHECKED	SUBMITTED	APPROVED	DATE
2	PHB	GLB	KEC	RDB	2-7-96
ADD MATERIAL SPECS, AND NOTE 4					
1	PHB	GLB	KEC	RDB	9-27-95
DELETE UNIT 2 ID'S, VARE C-5172L, REDRAW TO CADAM, ADD -1A SUPPORT ID'S					

TENNESSEE VALLEY AUTHORITY

WATTS BAR NUCLEAR PLANT
UNIT 1
CENTRIFUGAL CHARGING PUMP
WELD AND SUPPORT LOCATIONS

DRAWN: KEV	DATE: 9-2-83	SCALE: NOT TO SCALE	
CHECKED: JCG	APPROVED: JLB	CAD MAINTAINED DRAWING	REV
SUBMITTED:	1SI-0118-C-01		02

ENCLOSURE 1
ATTACHMENT 2

REQUEST FOR RELIEF, 1-ISI-07
ASME SECTION XI, 1989 EDITION, FIGURE IWC-2500-5

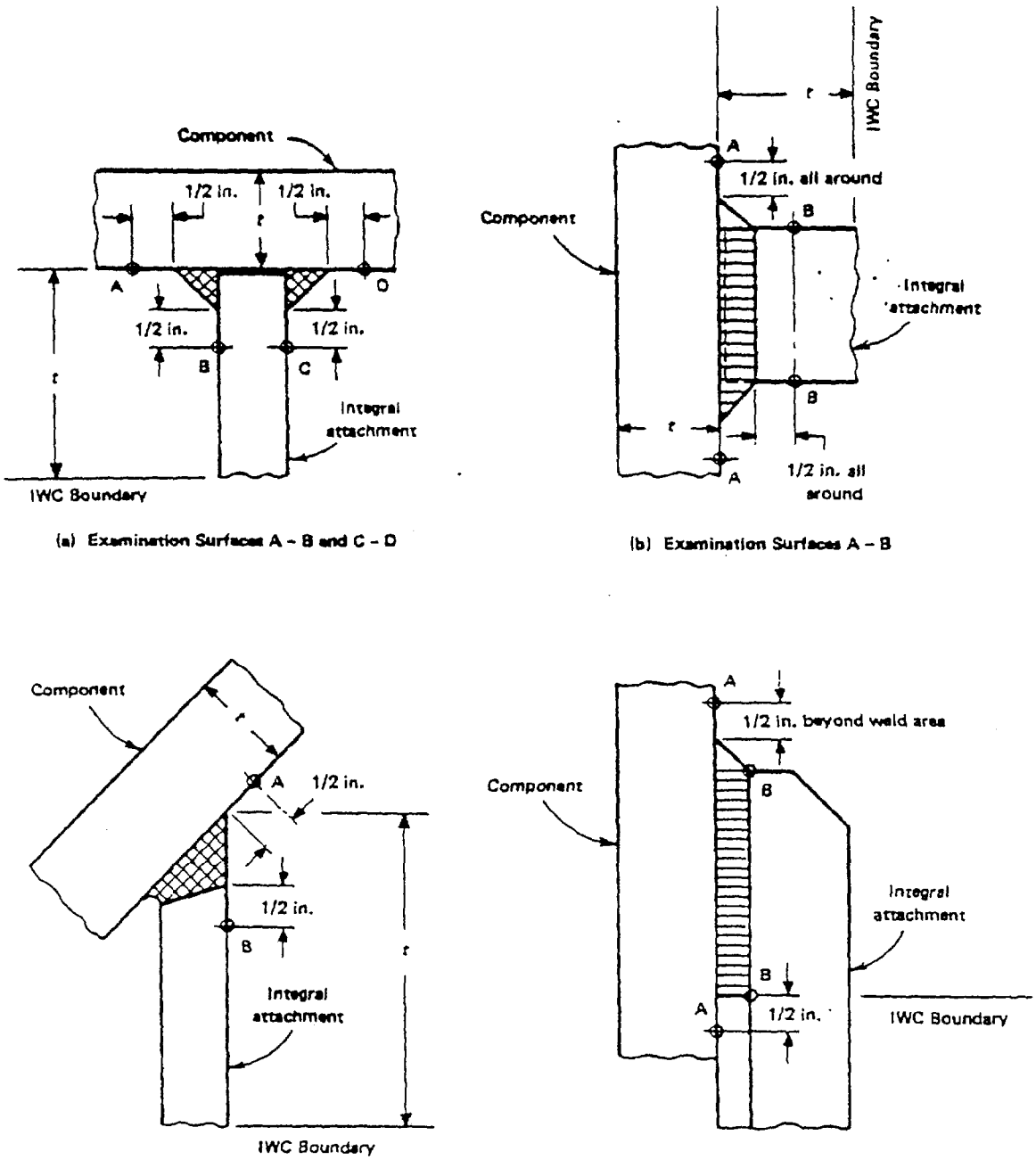

FIG. IWC-2500-5 INTEGRALLY WELDED ATTACHMENTS

ENCLOSURE 1
ATTACHMENT 3

REQUEST FOR RELIEF, 1-ISI-07
EXAMINATION REPORT R-0569

TENNESSEE VALLEY AUTHORITY	RECORD OF LIQUID PENETRANT EXAM	REPORT NUMBER R-0569

PROJECT: WBN UNIT: 1 CYCLE: 03A
SYSTEM: CVCS
WELD/COMPONENT ID: CCPH-1A-A-IA
CONFIG.: TPMPIWA TO
PROCEDURE: N-PT-9 REV.: 19 TC: N/A
EXAMINATION CODE 89E-01
CODE CLASS: 2 CATEGORY: C-C

EXAMINATION DATE 08/23/00
START TIME 09:05 END TIME: 13:24
EXAM SURFACE: ID ☐ OD ☑
PRESERVICE ☐ INSERVICE ☑
REF. DRAWING NO.: FC48590

ACCEPTANCE CRITERIA
☐ APPDX. A ☑ APPDX. B
☐ OTHER:

METHOD OF EXAMINATION

METHOD		PENETRANT MATERIALS	
WATER-WASHABLE FLUORESCENT DYE:	☐	BRAND NAME: MAGNAFLUX	
POST-EMULSIFIABLE FLUORESCENT DYE:	☐	PENETRANT SKL-SP	BATCH: 94M05K
SOLVENT-REMOVABLE FLUORESCENT DYE:	☐	REMOVER: SKC-S	BATCH: 98L07K
WATER-WASHABLE VISIBLE DYE:	☐	DEVELOPER: SKD-S2	BATCH: 96J08K
POST-EMULSIFIABLE VISIBLE DYE:	☐	BLACK LIGHT	
SOLVENT REMOVABLE VISIBLE DYE:	☑	METER S/N: N/A	
		AL. DUE DATE: A	

PART TEMP: 95 °F PYROMETER S/N: 522343 CAL. DUE DATE: 06/06/01

EXAMINATION RESULTS SATISFACTORY: ☑ UNSATISFACTORY: ☐ NOI NO.: N/A

EXPLANATION OF EXAM RESULTS:
NO REPORTABLE CONDITIONS OBSERVED.

COMMENTS/LIMITATIONS:
APPROXIMATELY 84.4% ASME CODE COVERAGE ACHIEVED. TOTAL WELD LENGTH IS 127" TOTAL LENGTH OF WELD EXAMINED 107.25" SEE ATTACHED DRAWINGS.

EXAMINER: Carey L. La Joya LEVEL: II
EXAMINER: Matt Wilch LEVEL: II
REVIEWER: [illegible] LEVEL: III DATE: 8-29-00

ANII: B. Earnigh
DATE: 9/13/00
PAGE: 1 OF 5

R-0569

WBN w/c1

4" . RIGHT SIDE

CCPH-1B-B-IA

R-0163

OUTBOARD WEST

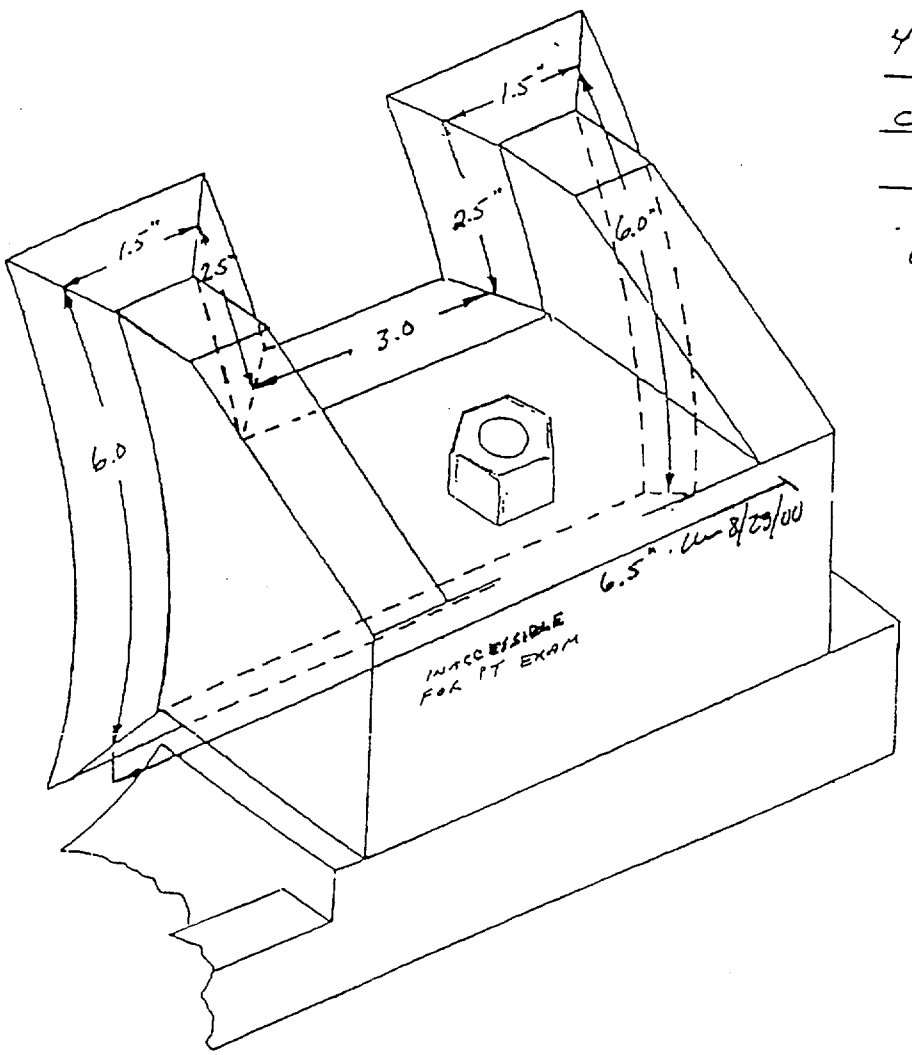

6.5"

2 of 5

R-0569

4"

LEFT SIDE

CCPH-18-8-IA

OUTBOARD WEST

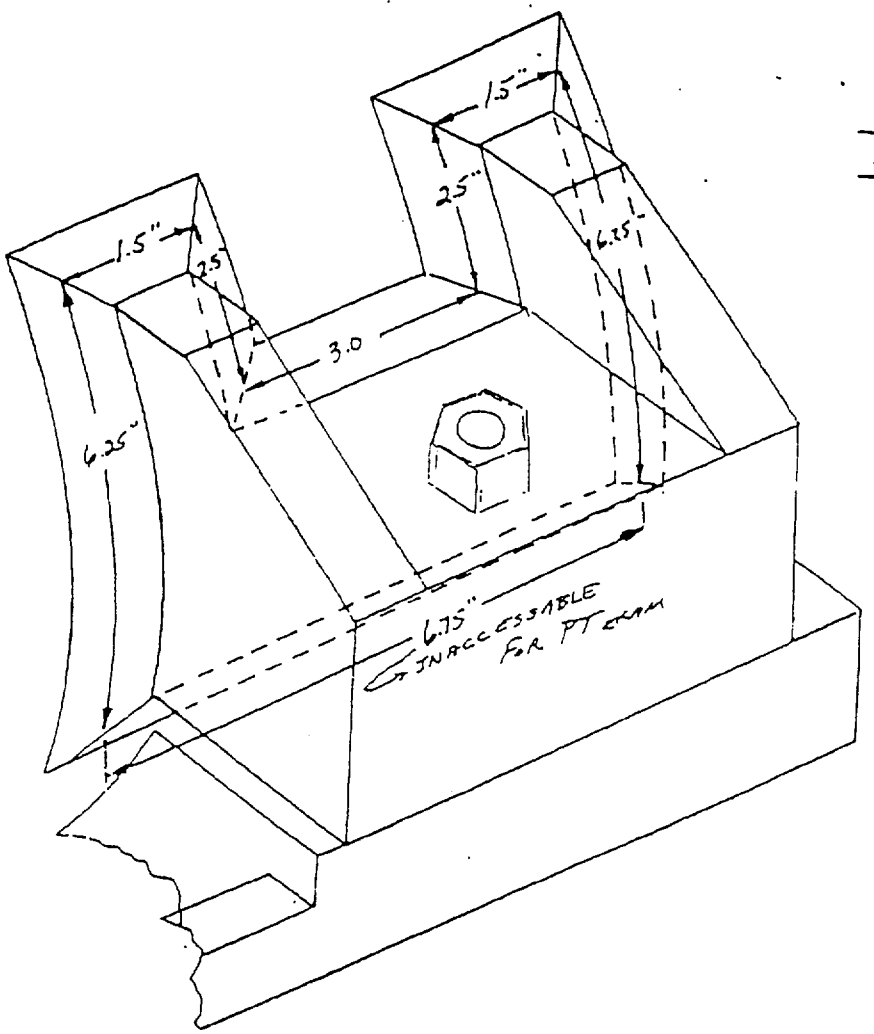

3 of 5

R-0569

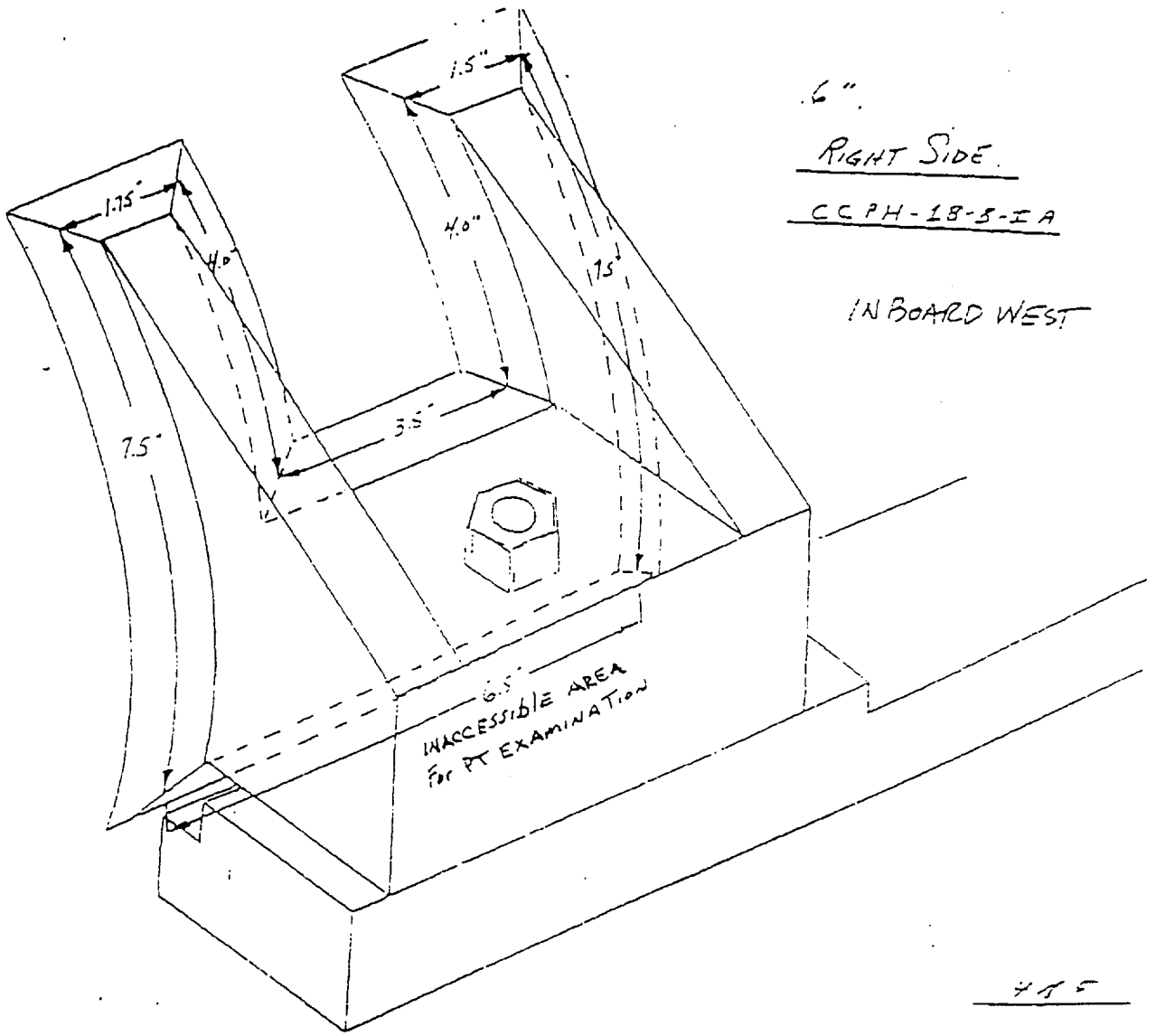

.6".

RIGHT SIDE

CCPH-18-S-IA

INBOARD WEST

R-0569

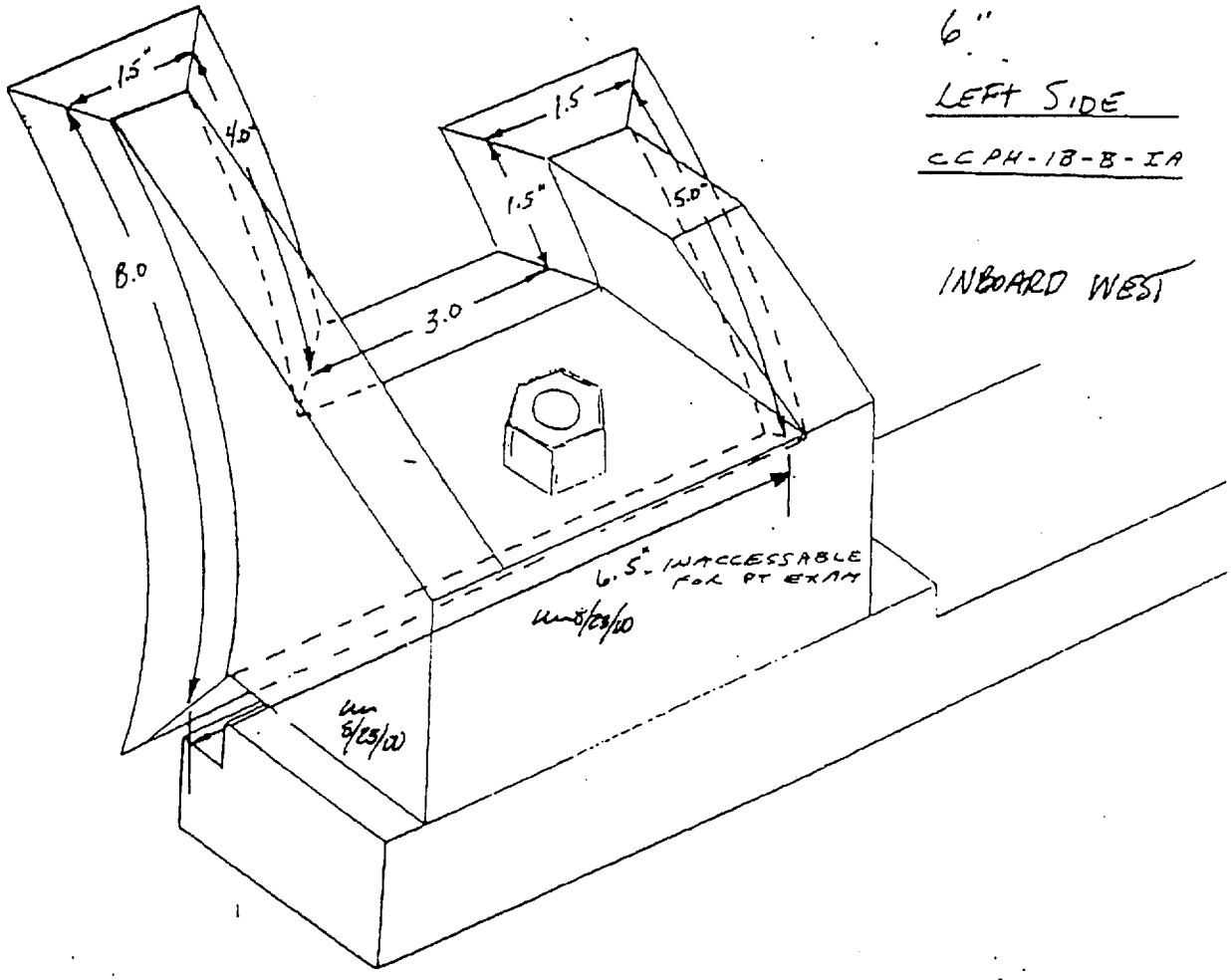

6"

LEFT SIDE

CCPH-1B-B-IA

INBOARD WEST

5-A5

ENCLOSURE 2

WATTS BAR NUCLEAR PLANT UNIT 1
INSERVICE INSPECTION PROGRAM
REQUEST FOR RELIEF, 1-ISI-08

ENCLOSURE 2

WATTS BAR NUCLEAR PLANT UNIT 1
FIRST 10-YEAR INTERVAL
REQUEST FOR RELIEF, 1-ISI-08

SUMMARY:

Volumetric examination of the two Steam Generator 1 nozzle-to-safe end butt welds during the Unit 1 Cycle 3 refueling outage resulted in less than essentially 100% of ASME code coverage being achieved due to geometric configurations of the steam generator nozzles and the material used for the main loop piping (CF8A). The geometric configuration of the nozzle prevents the performance of an ultrasonic scan from the generator side of the weld, thus preventing essentially 100% examination of the required lower one-third volume. An acceptable surface examination was performed on each of the two welds. Volumetric examination of this component is required in accordance with ASME Section XI Table IWB-2500-1, Examination Category B-F, Item Number B5.70. The lower one-third volume weld examination requirement is illustrated by Figure IWB-2500-8(c).

Therefore, pursuant to 10 CFR 50.55a(g)(5)(iii), it is requested that relief be granted for the first inspection interval.

This Request for Relief for the steam generator 1 nozzles is similar to Request for Relief 1-ISI-05 which was submitted following examination of steam generator 2 and 3 nozzles during the cycle 2 refueling outage. Request for Relief 1-ISI-05 was approved by the NRC in their Safety Evaluation Report issued on March 24, 2000.

I. COMPONENT:

Steam generator 1 nozzle-to-safe end butt welds.
Reference ISI drawing CHM-2547-C-01, (Attachment 1) weld identifiers RCF-D1-2-SE and RCF-F1-1-SE

II. CODE REQUIREMENT:

ASME Section XI, 1989 Edition, Table IWB-2500-1, Examination Category B-F, Item Number B5.70, volumetric examination requirement as defined by Figure IWB-2500-8(c) (Attachment 2).

III. CODE REQUIREMENTS FROM WHICH RELIEF IS REQUESTED:

Relief is requested from performing the required volumetric examination on essentially 100% of the lower one-third volume of the steam generator 1 nozzle-to-safe end butt welds.

ENCLOSURE 2

WATTS BAR NUCLEAR PLANT UNIT 1
FIRST 10-YEAR INTERVAL
REQUEST FOR RELIEF, 1-ISI-08

IV. BASIS FOR RELIEF:

The design configuration of the steam generator nozzles and the CF8A piping material precludes an ultrasonic examination of the required volume for the nozzle-to-safe end butt welds. The design configuration and piping material limits ultrasonic examination of the code required examination volume to approximately 61% on weld RCF-F1-1-SE (cold leg nozzle) and 65% on weld RCF-D1-2-SE (hot leg nozzle).

V. ALTERNATIVE EXAMINATION:

A volumetric examination of the lower one-third volume of the steam generator nozzle-to-safe end welds was performed on accessible areas to the extent practical given the geometric configuration and piping materials of the nozzle-to-safe end butt welds. The code required surface examinations were acceptable on 100% of the weld length for these welds during the Cycle 3 refueling outage.

VI. JUSTIFICATION FOR THE GRANTING OF RELIEF:

The geometric configuration of the steam generator hemispherical chamber and nozzle and piping material precludes ultrasonic examination of essentially 100% of the required examination volume. The nozzles are integrally cast with the hemispherical chamber as shown on the Proprietary Westinghouse drawings, EDSK-351101B, EDSK-351097B, and EDSK-351098B which were provided by TVA's letter to NRC dated August 31, 1999 concerning Request for Relief, 1-ISI-5, for WBN. The hemispherical chamber is a SA-216, Gr. WCC casting, clad with austenitic stainless steel. The nozzles have buttered 308L safe ends. The main loop reactor coolant piping connections to the nozzle safe end are static cast SA-351, CF8A elbows. The geometric configuration of the steam generator side of the weld joint prevents an ultrasonic scan from the nozzle side and the piping materials prevents two-directional coverage from the pipe side, thus precluding full volume examination. A representation of the achievable examination volume for the nozzle-to-safe end welds is depicted on each of the ultrasonic examination reports (Attachment 3).

ASME Section XI requires that the examination volume C-D-E-F as depicted on Figure IWB-2500-8(c) be examined by four scan directions, two normal to the weld and two parallel to the weld. Due to the anisotropic course grain structure of cast stainless CF8A materials, the examination was limited to the ½ vee technique using refracted longitudinal wave search units

with a beam angle of 45 degrees. All welds received 100% one direction coverage from the elbow side with the sound beam directed toward the steam generator. No scans were performed from the steam generator side due to the nozzle taper interference, therefore, 0% coverage was obtained from this direction. Scans parallel to the weld were performed to the extent that loss of search unit contact occurred on the steam generator side of the weld. All welds were previously conditioned during preservice inspection to maximize search unit coupling and provide access to the maximum extent precluding the nozzle configuration. Based on the extent of coverage obtained, it is reasonable to assure that flaws originating from the inner diameter would be detected to the degree comparable with industry standards.

WCAP-13670, "Handbook on Flaw Evaluation For Sequoyah Units 1 and 2 Primary Coolant System Piping," dated November 1993, and authored by W. H. Bamford, D. E. Prager, R. Brice-Nash, states that Westinghouse plants have no history of pipe cracking failure in the reactor coolant primary loop with exception of Iconel welds. For stress corrosion cracking (SCC) to occur, the following three conditions must exist simultaneously: high tensile stresses, a susceptible material (these welds contain no Iconel), and a corrosive environment. The potential for SCC is minimized in Westinghouse pressurized water reactors by material selection and prevention of a corrosive environment.

Radiographic examination of the nozzle-to-safe end weld as an alternative volumetric examination method was also determined to be impractical due to radiation exposure and lack of access from the inside diameter of the nozzle. During refueling outages, access to the steam generator head is provided through the primary manway to perform steam generator tube eddy current testing. Nozzle dams are inserted in the hot and cold legs to allow reactor coolant water to be raised within the hot and cold legs and the reactor vessel above the manway elevation while performing the eddy current testing. However, insertion of the nozzle dams blocks access to the nozzle-to-safe end welds. During the cycle 3 refueling outage, radiation exposure measured at the bottom of steam generator 1 bowl was 3.6 Rem on the hot leg side and 6.0 Rem on the cold leg side. It is estimated that set-up for radiographic examination of the nozzle-to-safe end welds with the nozzle dams removed would take 2 men approximately 3 hours for each nozzle, with approximately 1 hour required inside the bowl. Radiographic personnel would receive a dose of approximately 3.6 to 6 Rem for each nozzle-to-safe end weld radiographic

set-up. This dose does not include additional exposure for nozzle dam manipulation, nor exposure outside the steam generator head or inside the reactor vessel cavity while reactor coolant water is below the hot and cold legs. Radiography from the outside surface of the weld is also impractical due to a combination of the pipe wall thickness and volume of water inside the pipe.

During the preservice inspection, examination volume for these two welds was also reported to be limited and the welds were included in Preservice Inspection Program Request for Relief ISI-4. Approval was obtained in NRC's Safety Evaluation Report for Watts Bar Nuclear Plant Units 1 and 2, (NUREG-0847) Supplement 10, Appendix Z, Section 3.4. Request for Relief 1-ISI-05 was submitted following examination of steam generators 2 and 3 nozzles during the Cycle 2 refueling outage. Request for Relief 1-ISI-05 was approved by the NRC in a Safety Evaluation issued on March 24, 2000. There are two remaining nozzle-to-safe end welds required to be examined prior to the end of the first ten year interval. It is anticipated that based on the results of these examinations and the preservice examinations, code required examination coverage is not expected to be obtained for the remaining nozzle-to-safe end welds. Based upon actual coverage obtained following examination of those two remaining welds, it may be necessary to submit an additional relief request for those welds.

Conformance with the referenced code requirement is impractical, Due to the combined effect of the high percentage of ultrasonic examination coverage (61% and 65%), and 100% surface examination coverage. Therefore, it is requested that relief be granted in accordance with 10CFR 50.55a(g)(5)(iii) for the first inspection interval.

VII. IMPLEMENTATION SCHEDULE:

This Request for Relief is applicable to WBN's first inspection interval.

ENCLOSURE 2

WATTS BAR NUCLEAR PLANT
FIRST 10-YEAR INTERVAL
REQUEST FOR RELIEF, 1-ISI-08
LIST OF ATTACHMENTS

Attachment 1	ISI Drawing CHM-2547-C-01
Attachment 2	ASME Section XI, 1989 Edition, Figure IWB-2500-8(c), Similar and Dissimilar Metal Welds in Components and Piping
Attachment 3	Examination Data Reports Liquid Penetrant Examination Report R-0606 for Weld RCF-D1-2-SE Liquid Penetrant Examination Report R-0607 for Weld RCF-F1-1-SE Ultrasonic Examination Report R-0672 for Weld RCF-F1-1-SE Ultrasonic Examination Report R-0673 for Weld RCF-D1-2-SE

ENCLOSURE 2
ATTACHMENT 1

REQUEST FOR RELIEF 1-ISI-08
ISI DRAWING CHM-2547-C-01

NOTES:

1. SEE DETAIL A ON DWG. CHM-2660-C, SHEET 1 FOR THE STEAM GENERATOR TO PIPING WELDS, SG SAFE END WELD DETAILS AND INNER RADIUS SECTION. THE PIPE TO SG SAFE END WELD AND SG SAFE END TO SG NOZZLE WELD IS IDENTIFIED AS SHOWN AND CATEGORIZED AS ASME SECTION XI EXAM CATEGORY B-F. DISSIMILAR METAL WELD.
2. SEE DRAWING 1S1-0427-C FOR RV SAFE END WELDS AND INNER RADIUS SECTIONS
3. SEE DRAWING CHM-2570-C FOR PRESSURIZER SAFE END WELDS AND INNER RADIUS SECTIONS

REFERENCE DRAWINGS
SK.304-1 SHEETS 1 THRU 12

MATERIAL SPECIFICATIONS

PRESSURIZER SURGE LINE
NOM. PIPE SIZE-14"
SCH. 160 SA-376 SML'S

HOT LEG
20"ID & 31", 2.33" M.W.
SA351 CF-8A

CROSSOVER LEG
31"ID, 2.48" M.W.
SA-351 CF-8A

COLD LEG
27.5"ID, 2.21" M.W.
SA-351 CF-8A

BRANCH CONNECTIONS
6" SCH. 160 SA 403 WP 304S
10" SCH. 140 SA 403 WP 316 W/S
14" SCH. 140 SA 403 WP 316 S

ASME CC-1 (EQUIVALENT)

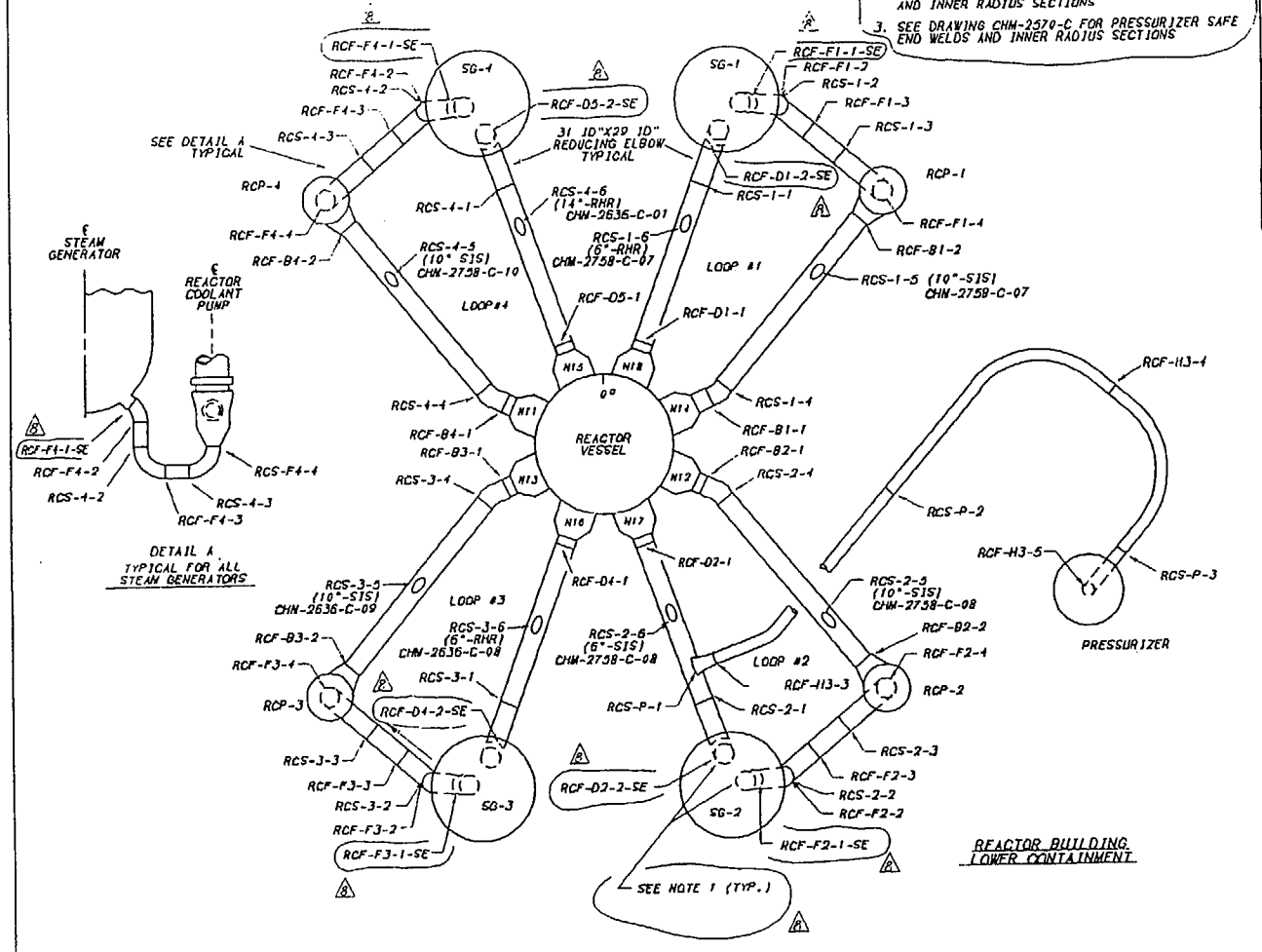

REACTOR BUILDING
LOWER CONTAINMENT

REV	BY	CHECKED	SUBMITTED	APPROVED	DATE
8	PHB	KEC	EOL	RDB	9-4-96
REVISE NOTES COMBINING NOTE 1 & 2 AND REMARKERING 3 & 4. ADD SE TO WELDS RCF-D2-2, RCF-F2-1, RCF-F3-1, RCF-D4-2, RCF-F4-1, RCF-D3-2, RCF-D1-2, RCF-F1-1. MODIFY POINTER TO NOTE 1					
7	PHB	KEC	GLB	RDB	2-7-96
ADD BRANCH MATERIAL SPECS & 31" ID, ADD BRANCH CONTINUATION. REV NOTE 2, CHANGE SHEET SIZE FROM B TO C. CLARIFY SAFE END WELDS					
6	PHB				
CHANGE NOTE 3 DRWG REF FROM CHM-2551-A TO 1S1-0427-C					
5	RPG	PHB	KEC	GLB	5-28-93
ADD NOTES 3 & 4. REMOVE SE ID'S. CORRECT PREFIX ON WELDS RCF-F4-2 & RCS-4-2					
4	RPG	JAA	JCG	GLB	10-4-90
ADD SHEETS 3 & 4. MADE CAD AND MINOR CHANGES					
3	JAA	JCG		GLB	8-6-84
ADD NOTE					

TENNESSEE VALLEY AUTHORITY

WATTS BAR NUCLEAR PLANT
UNIT 1
MECHANICAL REACTOR COOLANT PIPING
WELD LOCATIONS

DRAWN: KEV	DATE	SCALE: NOT TO SCALE	
CHECKED:	APPROVED: EFN	CAD MAINTAINED DRAWING	REV
SUBMITTED:	CHM-2547-C-01		08

ENCLOSURE 2
ATTACHMENT 2

REQUEST FOR RELIEF 1-ISI-08
ASME SECTION XI, 1989, FIGURE IWB-2500-8(c)

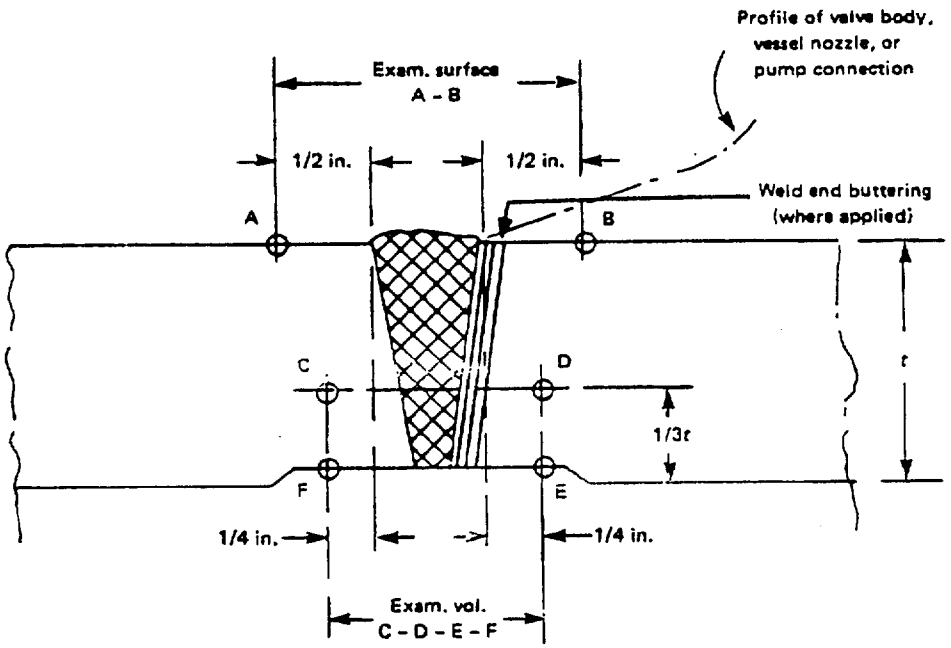

(c) NPS 4 or Larger

FIG. IWB-2500-8 SIMILAR AND DISSIMILAR METAL WELDS IN COMPONENTS AND PIPING (CONT'D)

ENCLOSURE 2
ATTACHMENT 3

REQUEST FOR RELIEF 1-ISI-08
EXAMINATION DATA REPORTS

TENNESSEE VALLEY AUTHORITY	RECORD OF LIQUID PENETRANT EXAM	REPORT NUMBER R-0606

PROJECT: WBN UNIT: 1 CYCLE: 03
SYSTEM: SG
WELD/COMPONENT ID: RCF-D1-2-SE
CONFIG.: PC.SE TO VNOZ
PROCEDURE: N-PT-9 REV.: 19 TC: N/A
EXAMINATION CODE 89E-01
CODE CLASS: 1 CATEGORY: B-F

EXAMINATION DATE 9-14-00
START TIME 1405 END TIME: 1450
EXAM SURFACE: ID ☐ OD ☑
PRESERVICE ☐ INSERVICE ☑
REF. DRAWING NO.: CHM-2547-C-01

ACCEPTANCE CRITERIA
☐ APPDX. A ☑ APPDX. B
☐ OTHER:

METHOD OF EXAMINATION

METHOD

WATER-WASHABLE FLUORESCENT DYE: ☐
POST-EMULSIFIABLE FLUORESCENT DYE: ☐
SOLVENT-REMOVABLE FLUORESCENT DYE: ☐
WATER-WASHABLE VISIBLE DYE: ☐
POST-EMULSIFIABLE VISIBLE DYE: ☐
SOLVENT REMOVABLE VISIBLE DYE: ☑

PENETRANT MATERIALS

BRAND NAME: MAGNAFLUX
PENETRANT SKL-SP BATCH: 94-M05K
REMOVER: SKC-S BATCH: 98-L07K
DEVELOPER: SKD-S2 BATCH: 96-J08K

BLACK LIGHT
METER S/N: N/A
AL. DUE DATE: N/A

PART TEMP: 91 °F PYROMETER S/N: 531989 CAL. DUE DATE: 6-6-01

EXAMINATION RESULTS SATISFACTORY: ☑ UNSATISFACTORY: ☐ NOI NO.: N/A

EXPLANATION OF EXAM RESULTS:
NRI

COMMENTS/LIMITATIONS:

EXAMINER: Dickey Michael LEVEL: II
EXAMINER: N/A LEVEL: N/A
REVIEWER: [signature] LEVEL: III DATE: 9-15-00

ANII: [signature]
DATE: 9-16-00
PAGE: OF

TENNESSEE VALLEY AUTHORITY	RECORD OF LIQUID PENETRANT EXAM	REPORT NUMBER R-0607

PROJECT: WBN UNIT: 1 CYCLE: 03
SYSTEM: SG
WELD/COMPONENT ID: RCF-F1-1-SE
CONFIG.: VNOZ TO PC,SE
PROCEDURE: N-PT-9 REV.: 19 TC: N/A
EXAMINATION CODE 89E-01
CODE CLASS: 1 CATEGORY: B-F

EXAMINATION DATE 9-14-00
START TIME 1245 END TIME: 1330
EXAM SURFACE: ID ☐ OD ☑
PRESERVICE ☐ INSERVICE ☑
REF. DRAWING NO.: CHM-2547-C-C

ACCEPTANCE CRITERIA
☐ APPDX. A ☑ APPDX. B
☐ OTHER:

METHOD OF EXAMINATION

METHOD

WATER-WASHABLE FLUORESCENT DYE: ☐
POST-EMULSIFIABLE FLUORESCENT DYE: ☐
SOLVENT-REMOVABLE FLUORESCENT DYE: ☐
WATER-WASHABLE VISIBLE DYE: ☐
POST-EMULSIFIABLE VISIBLE DYE: ☐
SOLVENT REMOVABLE VISIBLE DYE: ☑

PENETRANT MATERIALS

BRAND NAME: MAGNAFLUX
PENETRANT SKL-SP BATCH: 94-M05K
REMOVER: SKC-S BATCH: 98-L05K
DEM 9/15/00
DEVELOPER: SKD-S2 BATCH: 96-JO8K

BLACK LIGHT
METER S/N: N/A
AL. DUE DATE: N/A

PART TEMP: 91 °F PYROMETER S/N: 531989 CAL. DUE DATE: 6-6-01

EXAMINATION RESULTS SATISFACTORY: ☑ UNSATISFACTORY: ☐ NOI NO.: N/A

EXPLANATION OF EXAM RESULTS:
NRI

COMMENTS/LIMITATIONS:

EXAMINER: Dickey Michael LEVEL: II
EXAMINER: N/A LEVEL: N/A
REVIEWER: [illegible] LEVEL: [illegible] DATE: 9-19-00

ANII: [illegible]
DATE: 9-16-00
PAGE: OF

TENNESSEE VALLEY AUTHORITY	EXAMINATION SUMMARY AND RESOLUTION SHEET	REPORT NO. R- 0672

PROJECT: WBN UNIT: 1

SYSTEM: STEAM GENERATOR

WELD I.D.: RCF-F1-1-SE

CONFIG: S.G. NOZZLE TO: ELBOW

FLOW

PROCEDURE: N- 33 REV.: 8 TC: N/A

NDE METHOD: ☒ UT ☒ PT ☒ MT ☒ VT

EXAMINER: DAVID M. GRIESEL LV: II

EXAMINER: LV:

EXAMINER: N/A LV:

EXAMINER: LV:

CAL. SHT NO'S: N/A

DATA ASSOCIATED WITH MANUAL ULTRASONIC EXAMINATION OF WELD # RCF-F1-1-SE, STEAM GENERATOR NOZZ. to SAFE END WELD. PERFORMED to ASME SECTION XI.

EXAMINATION PERFORMED USING A 45° R.L. TRANSDUCER IN the AX AND CIRC. DIRECTION'S

COVERAGE WAS Limited DUE to NOZZLE CONFIGURATION. NO SCAN 3 AND Limited Coverage ON SCAN'S 5 & 6

61% TOTAL COVERAGE
SEE ATTACHED COVERAGE PLOT.

EVALUATOR: DAVID M GRIESEL LEVEL: II DATE: 9-14-00

CONCURRENCE: LEVEL: III DATE: 9-16-00

ANII: B. Carrick DATE: 9/22/00

PAGE 1 OF 6

TVA 19670C (NP 7/92)

TENNESSEE VALLEY AUTHORITY

DATA SHEET

REPORT NUMBER: R-0672

PROJECT: WBN UNIT: CYCLE:	CALIBRATION DATE: 9-14-00
PROCEDURE: N-UT-33 REV: 8 TC: N/A	CALIBRATION BLOCK NO.: W.B. 60 TEMP: 68 °F
INSTRUMENT: KB DUE DATE: 6-21-01	SIMULATOR BLOCK NO: 93-5720
MODEL/TYPE: USN 50 SERIAL NO.: 6040.50	THERMOMTER S/N: 531985 DUE DATE: 6-01-00
TRANSDUCER MANUF: KBA	COUPLANT ULTRAGEL II BATCH: 00125
S/N H11819 H11820 SIZE: 1.0" FREQ: 1.0 MHz	EXAM TYPE: SHEAR ☒ LONG ☒ RL ☒
CABLE TYPE: RG-58 LENGTH: 6' inches	ANGLE VERIFICATION
	BLOCK TYPE: Romeus S/N: 93-5720
DAC	NOMINAL ANGLE: 45° ACTUAL ANGLE: 45°

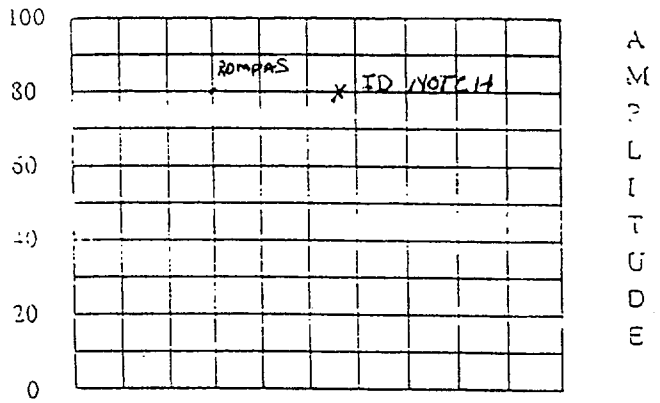

DISPLAY WIDTH: 7.0 inches

INSTRUMENT SETTINGS

REFLECTOR			REFERENCE SENSITIVITY	MEMORY NUMBER
SCAN DIRECT.	NTCH	SDH		
AXIAL	☒	☒	N/A dB	N/A
CIRC	☒	☒	62 dB	3

FREQ: 1.1 MHz	REJECT: 0 %
ANGLE: 45° deg	DAMPING: FIXED ohms
DELAY: 12.33 msec	PULSER: DUAL "
ZERO: 14.146 msec	FILTER: FIXED "
VELOCITY: .2054 msec	REP RATE: HIGH
RANGE: 7.0 inches	TOF: ☐ PEAK ☒ FLANK
RECTIFIER: FULL	POWER: BATT.
DUAL: ☒ ON ☒ OFF	TCG: ☒ ON ☒ OFF

REFLECTOR: RomPAS GAIN: 48 dB	CALIBRATION TIMES
AMPLITUDE: 80 % METAL PATH: 2.0 "	INITIAL TIME: 20:10 FINAL TIME: 22:05

VERIFICATION TIMES	1) 2043	2) 2110	3) 2135	4) 2255	5)	6)	7)	8)	9)

* PDI QUALIFIED INSTRUMENT SETTINGS:
VERIFY INSTRUMENT SETTINGS AND CALIBRATION SEQUENCE ARE IN ACCORDANCE WITH TABLE 2 OF THE APPLICABLE PDI QUALIFICATION IMPLEMENTATION PROCEDURE !

LINEARITY CHECK

VERTICAL	SIGNAL 1	100	90	80	70	60	50	40	30	20
	SIGNAL 2	50	45	40	35	30	25	20	15	10

ATTENUATOR	GAIN	SET	-6 dB	-12 dB	SET	+12	SET	+6
	AMP	80%	32 TO 48	16 TO 24	20 %	64 TO 96	40%	64 TO 96
			45 %	20 %		80%		80%

COMMENTS: NONE

N/A

WELDS/ITEMS EXAMINED:
RCF-D1-Z-SE
RCF-F1-J-SE

N/A

EXAMINER:	EXAMINER:	REVIEWER:	ANII:
DAVID M. GRIEBEL	N/A	M R Bentley	B. Earnight
LEVEL: II	LEVEL:	LEVEL: III DATE: 9-19-00	DATE: 9/22/00

PG.: 2 OF 6

TENNESSEE VALLEY AUTHORITY	ULTRASONIC DATA SHEET	REPORT NUMBER: R-0672

PROJECT: W.B.N.	UNIT: 1	CYCLE: 03	CALIBRATION DATE: 9-14-00
PROCEDURE: N-UT-33	REV: 8	TC: N/A	CALIBRATION BLOCK NO.: W.B. 60 TEMP: 68 °F
INSTRUMENT: K.B.	DUE DATE: 6-21-01		SIMULATOR BLOCK NO: 93-5720
MODEL/TYPE: USN 50	SERIAL NO.: 604050		THERMOMTER S/N: 531985 DUE DATE: 5-01-01
TRANSDUCER MANUF: KBA	E-2477		COUPLANT ULTRAGEL II BATCH: 00125
S/N H1817 H1818	SIZE: 1.0"	FREQ: 1.0 MHz	EXAM TYPE: SHEAR ☒ LONG ☒ RL ☒
CABLE TYPE: RG-58	LENGTH: 6' inches		ANGLE VERIFICATION
			BLOCK TYPE: Rompas S/N: 93-5720
DAC			NOMINAL ANGLE: 45° ACTUAL ANGLE: 45°

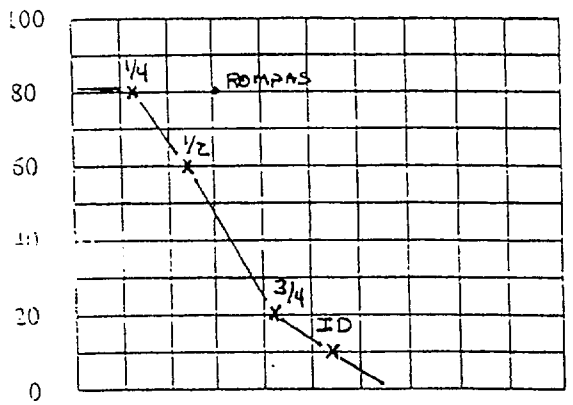

DISPLAY WIDTH: 7.0 inches

INSTRUMENT SETTINGS

REFLECTOR			REFERENCE	MEMORY
SCAN DIRECT.	NTCH	SDH	SENSITIVITY	NUMBER
AXIAL	☒	☒	48 dB	2
CIRC	☒	☒	N/A dB	N/A

FREQ: 1.0	MHz	REJECT: 0	%
ANGLE: 45°	deg	DAMPING: FIXED	ohms
DELAY: 12.33	msec	PULSER: LOW	*
ZERO: 14.146	msec	FILTER: FIXED	*
VELOCITY: .2054	msec	REP RATE: HIGH	
RANGE: 7.0	inches	TOF: ☒ PEAK ☒ FLANK	
RECTIFIER: FIXED		POWER: BATT.	
DUAL: ☒ ON ☒ OFF		TCG: ☒ ON ☒ OFF	

RL REFLECTOR: Rompas	GAIN: 42 dB	CALIBRATION TIMES	
AMPLITUDE: 80 %	METAL PATH: 2" "	INITIAL TIME: 20:10	FINAL TIME: 22:05

VERIFICATION TIMES	1) 2020	2) 2040	3) 2113	4) 2133	5)	6)	7)	8)	9)

* PDI QUALIFIED INSTRUMENT SETTINGS:
VERIFY INSTRUMENT SETTINGS AND CALIBRATION SEQUENCE ARE IN ACCORDANCE WITH TABLE 2 OF THE APPLICABLE PDI QUALIFICATION IMPLEMENTATION PROCEDURE !

LINEARITY CHECK

VERTICAL	SIGNAL 1	100	90	80	70	60	50	40	30	20
	SIGNAL 2	50	45	40	35	30	25	20	15	10

ATTENUATOR	GAIN	SET	-6 dB	-12 dB	SET	+12	SET	+6
	AMP	80%	32 TO 48	16 TO 24	20 %	64 TO 96	40%	64 TO 96
			45 %	20 %		80 %		80 %

COMMENTS: NONE	WELDS/ITEMS EXAMINED:
N/A	RCF-D1-2-SE
	RCF-F1-1-SE
	N/A

EXAMINER:	EXAMINER:	REVIEWER:	ANII:
David M. Grieber	N/A	[signature]	B. Ramirez
LEVEL: II	LEVEL:	LEVEL: III DATE: 9-19-00	DATE: 9/22/00
			PG.: 3 OF 6

TENNESSEE VALLEY AUTHORITY	MANUAL ULTRASONIC PIPING EXAMINATION DATA SHEET	REPORT NO. R- 0672

PROJECT: W.B.N. UNIT: 1

SYSTEM: STEAM GENERATOR

WELD I.D.: RCF-F1-1-SE

CONFIG: S.G. NOZZLE TO: ELBOW

FLOW

PROCEDURE: N-UT- 33 REV.: 8 TC: N/A

Wo REFERENCE: WELD CENTERLINE

Lo REFERENCE: T.D.C.

EXAMINATION DATE: 9-14-00

START TIME: 21:13 END TIME: 21:50

EXAM SURFACE: ☒ ID ☒ OD

MATERIAL TYPE: ☐ CS ☐ SS ☐ ESCL ☒ CCSS

SURFACE TEMP: 88° F PYRO NO: 531985

CALIBRATION SHEET NO.	C-	C-
EXAMINATION ANGLE	45° DEG.	N/A DEG.
CIRC. SCAN SENSITIVITY	65 dB	N/A dB
AXIAL SCAN SENSITIVITY	54 dB	N/A dB

IND. NO.	L (In) FROM REF. LT	L MAX	L2	AT MAX AMP W MAX	MP MAX	MAX AMP %DAC	EXAM NO. 3-14	NOM. ANG.	NRI	INDICATION INFORMATION: TYPE, DAMPING, ETC.
							4	45°	X	N/A
							5	45°	X	SCANNED AT +3dB DUE to EXCESSIVE NOISE LEVELS
							6	45°	X	SCANNED AT +3dB DUE TO EXCESSIVE NOISE LEVELS
							N/A			

REMARKS/LIMITATIONS: NO SCAN 3 DUE to NOZZLE CONFIGURATION
SCAN LIMITATION - SCANS 5&6 DUE to NOZZLE CONFIGURATION

EXAMINER: DAVID M. GRIESSE LEVEL: II

AMINER: N/A LEVEL: N/A

REVIEWED BY: [signature] LEVEL: III DATE: 9-19-00

ANII: B. Ennis DATE: 9/22/00

PAGE 4 OF 6

TVA 19670 (NP 7/92)

TVA	WALL THICKNESS PROFILE SHEET	REPORT NO: R-0672

PROJECT: W.B.N.

UNIT: 1

WELD NO: RCF-F1-1-SE

SYSTEM: STEAM GENERATOR

Record Thickness Measurements As Indicated, Including Weld Width, Edge-To-Edge At 0°

Position	0°	90°	180°	270°
1	N/A			
2	N/A			
3	2.5		N/A	
4	2.5			
5	2.8			

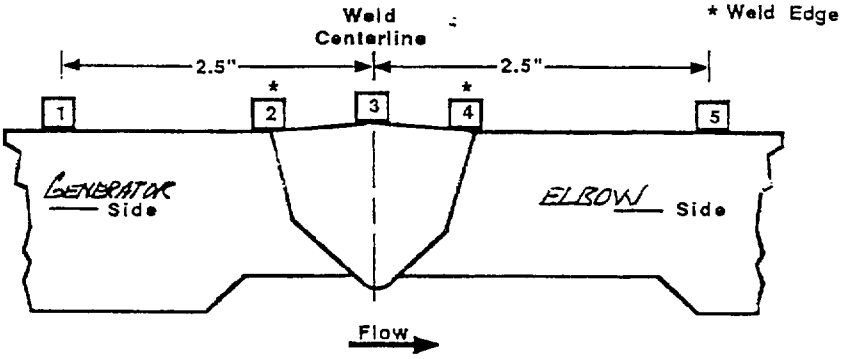

CROWN HEIGHT: FLUSH

DIAMETER: 36"

CROWN WIDTH: 2.0"

WELD LENGTH: 112.25"

SEE ATTACHED SKETCH SHEET

EXAMINER: DAVID M. GRIEBEL

LEVEL: II

DATE: 9-14-00

REVIEWED BY: [signature]

LEVEL: III

DATE: 9-19-00

ANII: B Ramnath

DATE: 9/22/00

PAGE 5 OF 6

TVA 19668 (NP-5-89)

1-103-999-44

TVA Office of Nuclear Power	PROJECT: W. B. N. SYSTEM: STEAM GENERATOR Unit: 1 WELD NO.: RCF-F1-1-SE	REPORT NO.: R-067R

COVERAGE PLOT

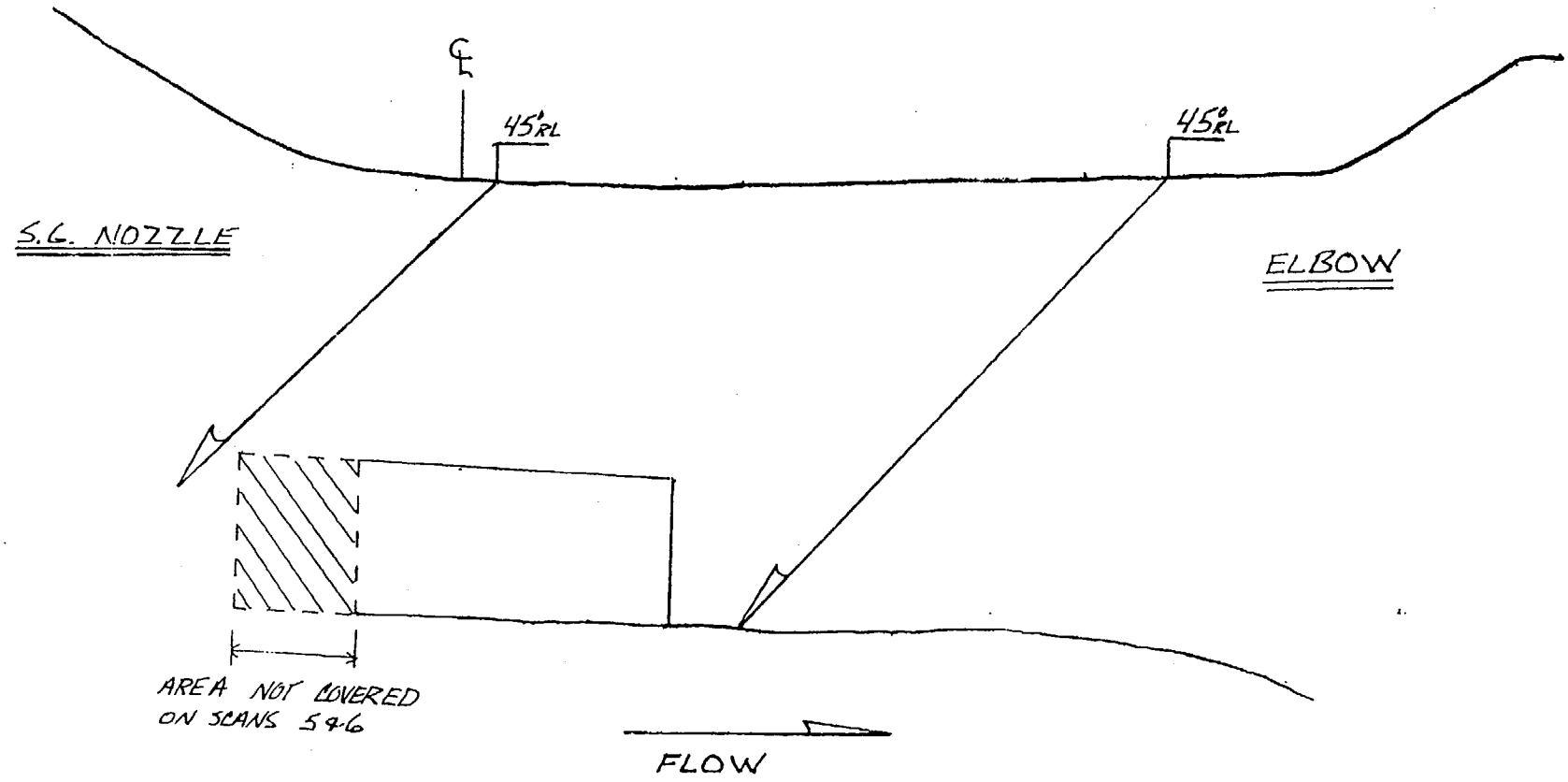

BY: David M. Griesser LEVEL: II DATE: 4-14-00 PAGE 6 OF 6

TVA 19669 (ONP-6-88)

TENNESSEE VALLEY AUTHORITY	EXAMINATION SUMMARY AND RESOLUTION SHEET	REPORT NO. R- 0673

PROJECT: W.B.N. UNIT: 1

SYSTEM: STEAM GENERATOR

WELD I.D.: RCF-D1-2-SE

CONFIG: ELBOW1 TO: S.G. NOZZLE

FLOW

PROCEDURE: N- 33 REV.: 8 TC: N/A

NDE METHOD: ☒ UT ☒ PT ☒ MT ☒ VT

EXAMINER: DAVID M. GRIEBEL LV: II

EXAMINER: LV:

EXAMINER: LV:

EXAMINER: LV:

N/A

CAL. SHT NO'S: N/A

DATA ASSOCIATED WITH MANUAL ULTRASONIC EXAMINATION OF WELD # RCF-D1-2-SE STEAM GENERATOR NOZZLE to SAFE END WELD. PERFORMED to ASME SECTION XI.

EXAMINATION PERFORMED USING A 45° RL TRANSDUCER IN THE AX AND CIRC. DIRECTIONS.

NO SCAN 4, AND Limited COVERAGE ON SCANS 5 AND 6 DUE to NOZZLE CONFIGURATION.

65% TOTAL COVERAGE
SEE ATTACHED COVERAGE PLOT.

EVALUATOR: DAVID M. GRIEBEL LEVEL: II DATE: 9-14-00

CONCURRENCE: LEVEL: III DATE: 9-19-00

ANII: D. Schmidt DATE: 9/22/00

PAGE 1 OF 4

TVA 19670C (NP 7/92)

TENNESSEE VALLEY AUTHORITY	DIGITAL ULTRASONIC CALIBRATION DATA SHEET	REPORT NUMBER: R-0673

PROJECT: W.B.N. UNIT: 1 CYCLE: 03	CALIBRATION DATE: 9-14-00
PROCEDURE: N-UT-33 REV: 8 TC: N/A	CALIBRATION BLOCK NO.: W.B. 60 TEMP: 68 °F
INSTRUMENT: K.B. DUE DATE: 6-21-01	SIMULATOR BLOCK NO: 93-5720
MODEL/TYPE: USN 50 SERIAL NO.: 604050	THERMOMTER S/N: 531985 DUE DATE: 5-01-01
TRANSDUCER MANUF: KBA E-2A752	COUPLANT ULTRAGEL II BATCH: 00125
S/N H11817 H11818 SIZE: 1.0" FREQ: 1.0 MHz	EXAM TYPE: SHEAR ☒ LONG ☒ RL ☒
CABLE TYPE: RG-58 LENGTH: 6' inches	ANGLE VERIFICATION
	BLOCK TYPE: ROMPUS S/N: 93-5720
DAC	NOMINAL ANGLE: 45° ACTUAL ANGLE: 45°

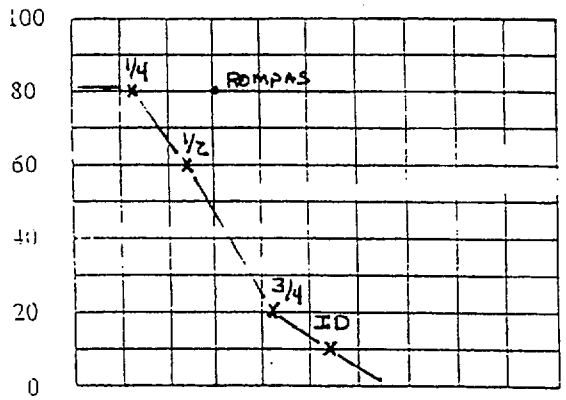

DISPLAY WIDTH: 7.0 inches

INSTRUMENT SETTINGS

REFLECTOR			REFERENCE SENSITIVITY	MEMORY NUMBER
SCAN DIRECT.	NTCH	SDH		
AXIAL	☒	☒	48 dB	2
CIRC	☒	☒	N/A dB	N/A

FREQ. 15.15 MHz	REJECT: 0 %
ANGLE: 45° deg	DAMPING: FIXED ohms
DELAY: 12.33 msec	PULSER: DUAL "
ZERO: 14.146 msec	FILTER: FIXED "
VELOCITY: .2054 msec	REP RATE: HIGH
RANGE: 7.0 inches	TOF: ☒ PEAK ☒ FLANK
RECTIFIER: FIXED	POWER: BATT.
DUAL: ☒ ON ☒ OFF	TCG: ☒ ON ☒ OFF

REF. REFLECTOR: ROMPAS GAIN: 4/2 dB	CALIBRATION TIMES
AMPLITUDE: 80 % METAL PATH: 2" "	INITIAL TIME: 20:10 FINAL TIME: 21:05

VERIFICATION TIMES	1) 2020	2) 2040	3) 2113	4) 2133	~~5)~~	~~6)~~	7)	~~8)~~	~~9)~~

* PDI QUALIFIED INSTRUMENT SETTINGS:
VERIFY INSTRUMENT SETTINGS AND CALIBRATION SEQUENCE ARE IN ACCORDANCE WITH TABLE 2 OF THE APPLICABLE PDI QUALIFICATION IMPLEMENTATION PROCEDURE !

LINEARITY CHECK

VERTICAL	SIGNAL 1		100	90	80	70	60	50	40	30	20
	SIGNAL 2		50	45	40	35	30	25	20	15	10
ATTENUATOR	GAIN	SET	-6 dB		-12 dB		SET		÷12	SET	+6
	AMP	80%	32 TO 48		16 TO 24		20 %		64 TO 96	40%	64 TO 96
			45 %		20 %				80 %		80 %

COMMENTS: NONE	WELDS/ITEMS EXAMINED:
N/A	RCF-D1-2-SE
	RCF-F1-1-SE
	N/A

EXAMINER:	EXAMINER:	REVIEWER:	ANII:
DAVID M. GRIEBEL	N/A		DATE: 9/22/00
LEVEL: II	LEVEL:	LEVEL: II DATE: 9-19-00	PG.: 2 OF 6

TENNESSEE VALLEY AUTHORITY	DIGITAL ULTRASONIC CALIBRATION DATA SHEET	REPORT NUMBER: R-0673

ECT: WBN UNIT: 1 CYCLE:
PROCEDURE: N-UT-33 REV: 8 TC: N/A
INSTRUMENT: K.B. DUE DATE: 6-21-01
MODEL/TYPE: USN 50 SERIAL NO.: 604050
TRANSDUCER MANUF: KBA
S/N H11819 H11820 SIZE: 1.0" FREQ: 1.0 MHz
CABLE TYPE: RG-58 LENGTH: 6' inches

CALIBRATION DATE: 9-14-00
CALIBRATION BLOCK NO.: W.B. 60 TEMP: 68 °F
SIMULATOR BLOCK NO: 93-5720
THERMOMTER S/N: 531985 DUE DATE: 5-01-00
COUPLANT ULTRAGEL II BATCH: 00125
EXAM TYPE: SHEAR ☒ LONG ☒ RL ☒

ANGLE VERIFICATION

BLOCK TYPE: Romeus S/N: 93-5720
NOMINAL ANGLE: 45° ACTUAL ANGLE: 45°

DAC

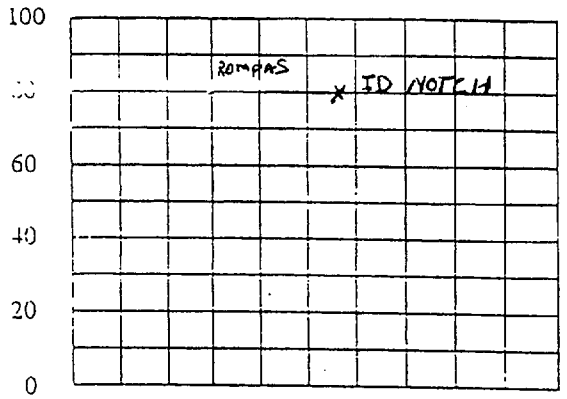

DISPLAY WIDTH: 7.0 inches

REF. REFLECTOR: Romeus GAIN: 48 dB
AMPLITUDE: 80 % METAL PATH: 2.0 "

INSTRUMENT SETTINGS

REFLECTOR			REFERENCE SENSITIVITY	MEMORY NUMBER
SCAN DIRECT.	NTCH	SDH		
AXIAL	☒	☒	N/A dB	N/A
CIRC	☒	☒	62 dB	3

FREQ: 1.0 MHz REJECT: 0 %
ANGLE: 45° deg DAMPING: FIXED ohms
DELAY: 12.33 msec PULSER: DUAL *
ZERO: 14.146 msec FILTER: FIXED *
VELOCITY: .2054 msec REP RATE: HIGH
RANGE: 7.0 inches TOF: ☐ PEAK ☒ FLANK
RECTIFIER: FULL POWER: BATT.
DUAL: ☒ ON ☒ OFF TCG: ☒ ON ☒ OFF

CALIBRATION TIMES

INITIAL TIME: 20:10 FINAL TIME: 22:05

VERIFICATION TIMES 1) 2043 2) 2110 3) 2135 4) 2255 5) 6) 7) 8) 9)

* PDI QUALIFIED INSTRUMENT SETTINGS:
VERIFY INSTRUMENT SETTINGS AND CALIBRATION SEQUENCE ARE IN ACCORDANCE WITH TABLE 2 OF THE APPLICABLE PDI QUALIFICATION IMPLEMENTATION PROCEDURE !

LINEARITY CHECK

VERTICAL	SIGNAL 1		100	90	80	70	60	50	40	30	20
	SIGNAL 2		50	45	40	35	30	25	20	15	10
ATTENUATOR	GAIN	SET	-6 dB		-12 dB		SET	+12	SET	+6	
	AMP	80%	32 TO 48		16 TO 24		20 %	64 TO 96	40%	64 TO 96	
			45 %		20 %			80%		80%	

COMMENTS: NONE

N/A

WELDS/ITEMS EXAMINED:
RCF-D1-2-SE
RCF-F1-1-SE

N/A

EXAMINER: DAVID M. GRIEBEL LEVEL: II
EXAMINER: N/A LEVEL:
REVIEWER: LEVEL: III DATE: 9-19-00
ANII: DATE: 9/22/00
PG.: 3 OF 6

TENNESSEE VALLEY AUTHORITY	MANUAL ULTRASONIC PIPING EXAMINATION DATA SHEET	REPORT NO. R- 0673

PROJECT: W.B.N. UNIT: 1

SYSTEM: STEAM GENERATOR

WELD I.D.: RCF-D1-2-SE

CONFIG: ELBOW TO: S.G. NOZZLE

FLOW

PROCEDURE: N-UT- 33 REV.: 8 TC: N/A

Wo REFERENCE: WELD CENTERLINE

Lo REFERENCE: T.D.C.

EXAMINATION DATE: 9-14-00

START TIME: 20:21 END TIME: 21:10

EXAM SURFACE: ☒ ID ☒ OD

MATERIAL TYPE: ☐ CS ☐ SS ☐ CSCL ☒ CCSS

SURFACE TEMP: 88° F PYRO NO: 531985

CALIBRATION SHEET NO.	C- N/A	C- N/A
EXAMINATION ANGLE	45° DEG.	N/A DEG.
CIRC. SCAN SENSITIVITY	65 dB	dB
AXIAL SCAN SENSITIVITY	54 dB	dB

IND. NO.	L (In) FROM REF. L1	L MAX	L2	AT MAX AMP W MAX	MP MAX	MAX AMP %DAC	EXAM NO. 3-14	NOM. ANG.	NRI	INDICATION INFORMATION: TYPE, DAMPING, ETC.
							3	45°	X	N/A
							5	45°	X	SCANNED AT +3dB DUE to EXCESSIVE NOISE LEVELS
							6	45°	X	SCANNED AT +3dB DUE to EXCESSIVE NOISE LEVELS
							N/A			

REMARKS/LIMITATIONS: NO SCAN 4 DUE TO NOZZLE CONFIGURATION

SCAN LIMITATION - SCAN'S 5 & 6 DUE to NOZZLE CONFIGURATION

EXAMINER: DAVID GRIEBEL LEVEL: II

EXAMINER: N/A LEVEL: N/A

REVIEWED BY: [signature] LEVEL: III DATE: 9-19-00

ANII: B. Earnigh

DATE: 9/22/00

PAGE 4 OF 6

TVA 19670 (NP 7/92)

TVA	WALL THICKNESS PROFILE SHEET	REPORT NO: R-0673

PROJECT: W.B.N.

UNIT: 1

WELD NO: RCF-D1-2-SE

SYSTEM: STEAM GENERATOR

Record Thickness Measurements As Indicated, Including Weld Width, Edge-To-Edge At 0°

Position	0°	90°	180°	270°
1	2.8		N/A	
2	2.6			
3	2.5			
4		N/A		
5				

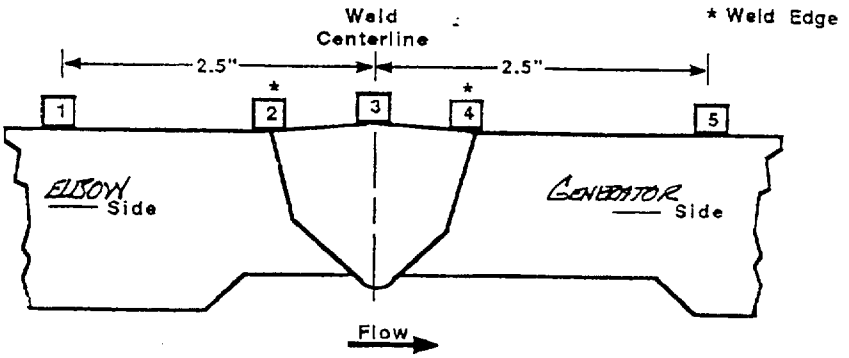

CROWN HEIGHT: FLUSH

CROWN WIDTH: 2.0"

DIAMETER: 36.0"

WELD LENGTH: 113.5"

SEE ATTACHED SKETCH SHEET

EXAMINER: DAVID M GRIFFITH	REVIEWED BY:	ANII: B. Carnight
LEVEL: II	LEVEL: III	DATE: 9/22/00
DATE: 9-14-00	DATE: 9-19-00	PAGE 5 OF 6

TVA 19668 (NP-5-89)

1-108-999-44

TVA Office of Nuclear Power	PROJECT: W. B. N. SYSTEM: STEAM GENERATOR Unit: 1 WELD NO.: RCF-D1-Z-SE	REPORT NO.: R-0673

COVERAGE PLOT

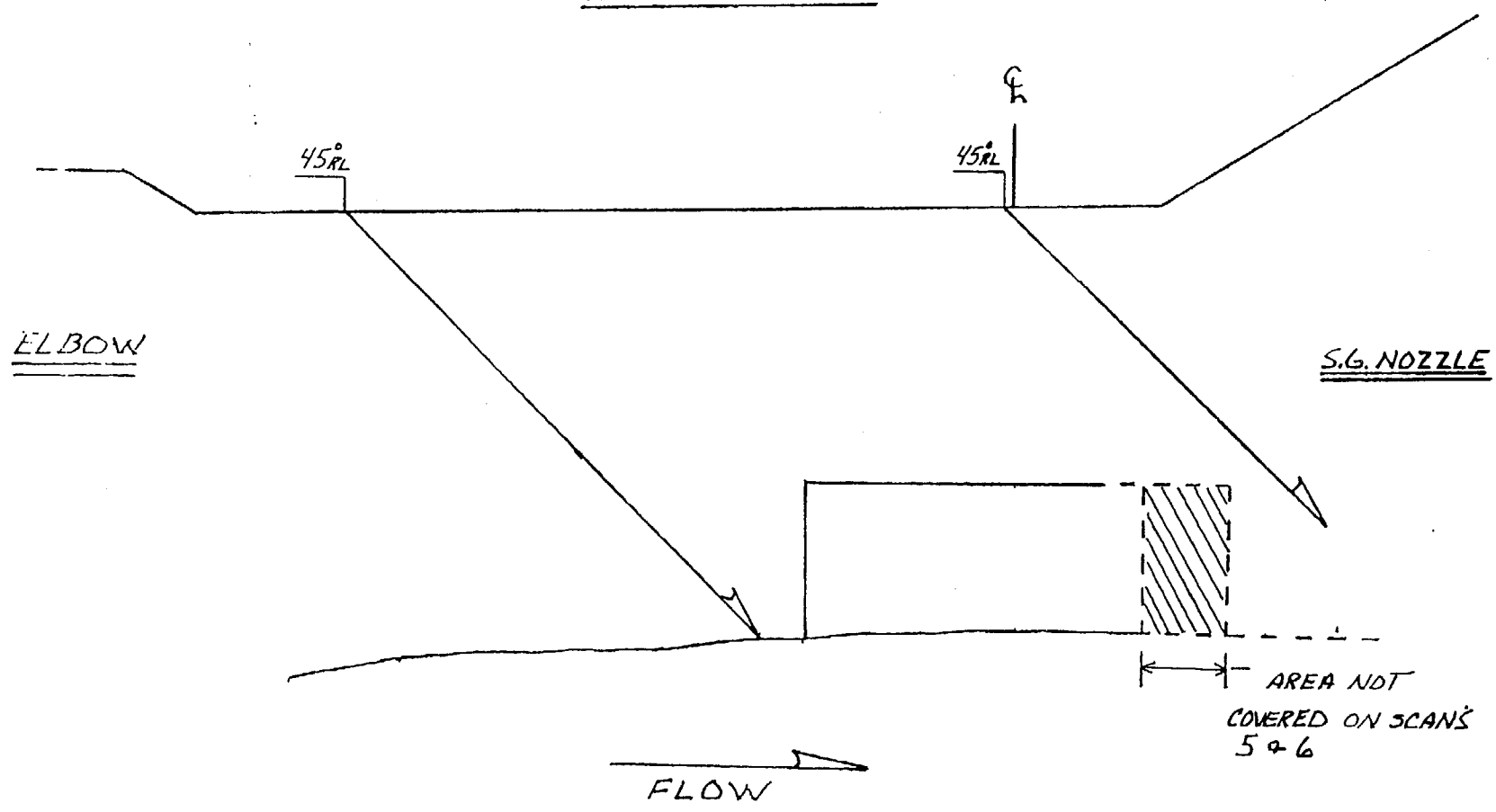

BY: DAVID M GRIEBEL LEVEL: II DATE: 9-14-00 PAGE A6 OF A6

TVA 19669 (ONP-6 88)

MPB 9-19-00

ENCLOSURE 3

WATTS BAR NUCLEAR PLANT UNIT 1
INSERVICE INSPECTION PROGRAM
REQUEST FOR RELIEF, 1-ISI-09

ENCLOSURE 3

WATTS BAR NUCLEAR PLANT
FIRST 10-YEAR INTERVAL
REQUEST FOR RELIEF, 1-ISI-09

SUMMARY:

Due to design configuration of the Residual Heat Removal (RHR) Heat Exchanger, volumetric examination of the shell-to-flange weld during the Unit 1 Cycle 3 outage resulted in less than essentially 100% of ASME code coverage being achieved. The location of the nozzle welds and support pads relative to the shell-to-flange weld is configured in a such manner that performance of an ultrasonic scan is limited to approximately 77% of the required examination volume. Volumetric examination of this weld is required in accordance with ASME Section XI Table IWC-2500-1, Examination Category C-A, Item Number C1.10. The full volume weld examination requirement is illustrated by Figure IWC-2500-1.

Conformance to the code requirement is impractical to implement due to physical restrictions, therefore, relief is requested in accordance with 10CFR50.55a(g)(5)(iii).

I. COMPONENT:

Residual Heat Removal Heat Exchanger Shell-to-Flange Weld Reference ISI Drawing CHM-2662-C-01, (Attachment 1), weld identifier RHRHX-2-1A

II. CODE REQUIREMENT:

ASME Section XI, 1989 Edition, Table IWC-2500-1, Examination Category C-A, Item Number C1.10, volumetric examination requirement as defined by Figure IWC-2500-1 (Attachment 2).

III. CODE REQUIREMENTS FROM WHICH RELIEF IS REQUESTED:

Relief is requested from performing the required volumetric examination on essentially 100% of the full volume of the RHR heat exchanger shell-to-flange weld.

IV. BASIS FOR RELIEF:

The design configuration of the RHR heat exchanger shell-to-flange weld precludes an ultrasonic examination of the required volume for the shell-to-flange weld. The location of the nozzle welds and support pads relative to the shell-to-flange weld is configured in such a manner that performance of an ultrasonic scan is limited to approximately 77% of the required examination volume.

V. ALTERNATIVE EXAMINATION:

A volumetric examination of the full volume of the RHR heat exchanger shell-to-flange weld was performed on accessible areas to the extent practical given the design configuration of the shell-to-flange weld.

VI. JUSTIFICATION FOR THE GRANTING OF RELIEF:

Due to design configuration of the RHR heat exchanger, volumetric examination of the shell-to-flange weld during the Unit 1 Cycle 3 outage resulted in less than essentially 100% of ASME code coverage being achieved. The location of the nozzle welds and support pads relative to the shell-to-flange weld is configured in a such manner that performance of an ultrasonic examination is limited to approximately 77% of the required volume. Volumetric examination of this weld is required in accordance with ASME Section XI Table IWC-2500-1, Examination Category C-A, Item Number C1.10. The full volume weld examination requirement is illustrated by Figure IWC-2500-1.

Vendor drawing BEU-17811 (Attachment 3), View A-A provides a depiction of the nozzle and support pad configuration relative to the shell-to-flange weld. Vendor drawing D-17811 provides dimensions of the nozzle and support pad in the respective details. As noted, the outside diameter of the nozzle is 18-1/2 inches and the width of the support pad is 18 inches. These are mounted on the 22-5/16 inches wide shell. Ultrasonic scanning from the shell side of the shell-to-flange weld near the nozzles and support pads is limited. The limited area is shown on Examination Report R-0574 (Attachment 4).

This limitation was also documented during the preservice inspection period on preservice request for relief ISI-15 which was authorized in NRC's Safety Evaluation Report for Watts Bar Nuclear Plant (NUREG-0847), Supplement Number 10, Appendix Z, issued October 1992.

Conformance to the code requirement is impractical to implement due to physical restrictions, therefore, relief is requested in accordance with 10CFR50.55a(g)(5)(iii).

IMPLEMENTATION SCHEDULE:

This Request for Relief is applicable to WBN's first inspection interval.

ENCLOSURE 3

WATTS BAR NUCLEAR PLANT
FIRST 10-YEAR INTERVAL
REQUEST FOR RELIEF, 1-ISI-09
LIST OF ATTACHMENTS

Attachment 1. ISI Drawing CHM-2662-C-01

Attachment 2. ASME Section XI, 1989 Edition, Figure IWC-2500-1, Vessel Circumferential Welds

Attachment 3. Vendor Drawing BEU-17811 and D-17811

Attachment 4. Ultrasonic Examination Report R-0574 for Weld RHRHX-2-1A

ENCLOSURE 3
ATTACHMENT 1

REQUEST FOR RELIEF, 1-ISI-09
ISI DRAWING CHM-2662-C-01

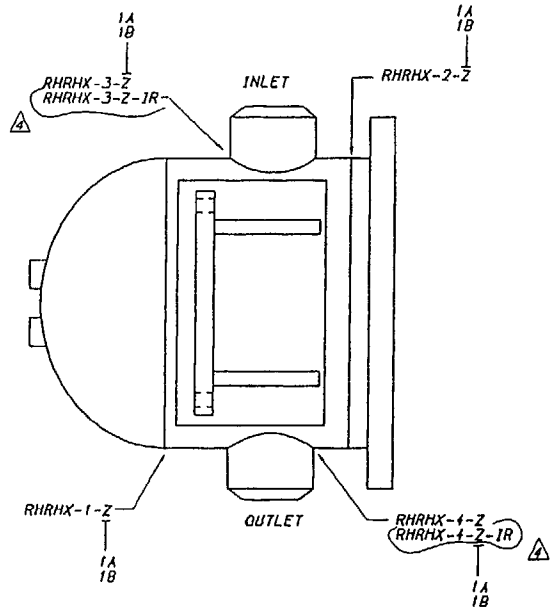

REFERENCE DRAWINGS

WBN-VTM-W120-2758 (VENDOR MANUAL)
48N1231-2

MATERIAL SPECIFICATIONS:

HEAD
1" THICK SA-240 TP 304
SHELL
1" THICK SA-240 TP 304
FITTINGS
SA-336 F 8
FLANGE
SA-336 F 8

ASME CC-2 (EQUIVALENT)

REV	BY	CHECKED	SUBMITTED	APPROVED	DATE
4	PHB	KEC	TLH	LLV	3-5-99
AD -1R TO NOZZLE WELD ID -3-Z AND -4-Z					
3	PHB	GLB	KEC	TLH	2-7-96
MOVE SUPPORTS TO SHEET 2. CLARIFY WELD ID					
2	PHB	GLB	KEC	RDB	9-27-95
REDRAWN TO CADAM, DELETE UNIT-1, ADD SUPPORT IDENTIFIER RESIZE BORDER TO C-SIZE. CLARIFY WELD IDENTIFIERS					
1	JAA	JCG		JTL	7-11-84
ADD MATERIAL SPECS					

TENNESSEE VALLEY AUTHORITY

WATTS BAR NUCLEAR PLANT
UNIT 1
RESIDUAL HEAT REMOVAL HEAT EXCHANGER
CHANNEL WELDS

DRAWN: KEV	DATE:	SCALE: NOT TO SCALE	
CHECKED: DAD	APPROVED: GLB	CAD MAINTAINED DRAWING	
SUBMITTED:	CHM-2662-C-01		04

ENCLOSURE 3
ATTACHMENT 2

REQUEST FOR RELIEF, 1-ISI-09
ASME SECTION XI, 1989 EDITION, FIGURE IWC-2500-1

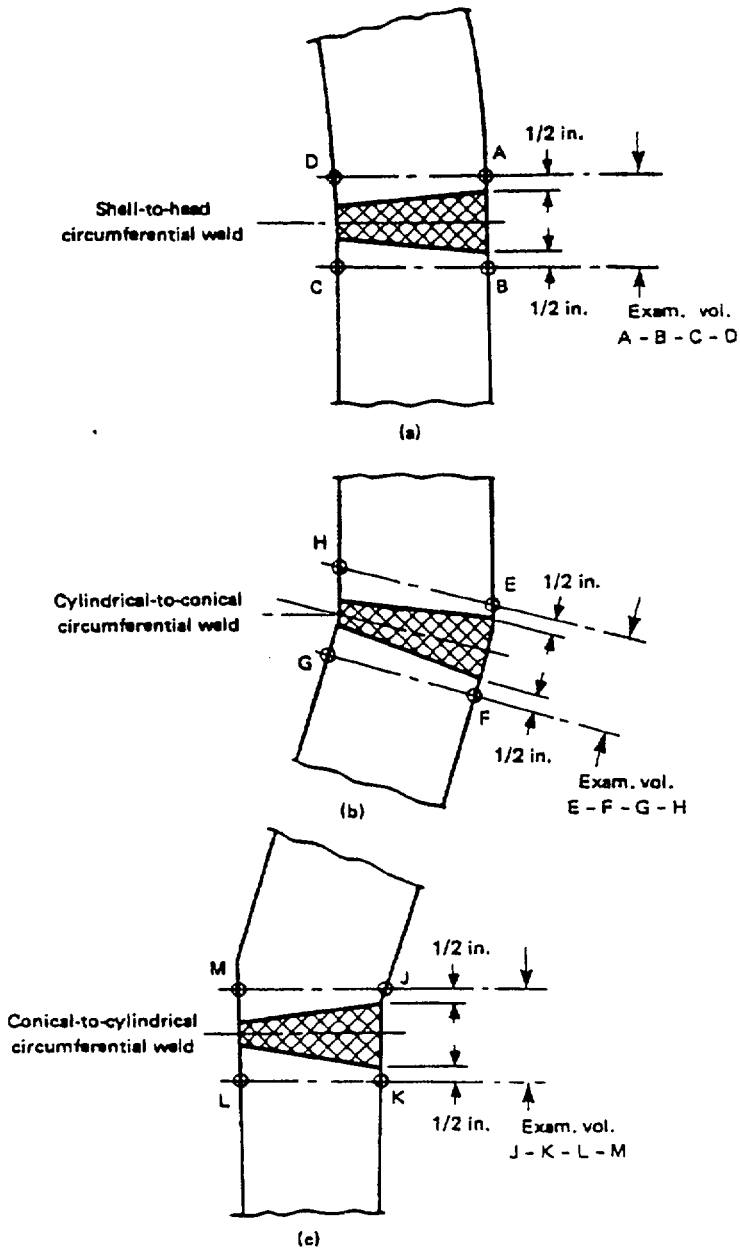

FIG. IWC-2500-1 VESSEL CIRCUMFERENTIAL WELDS

ENCLOSURE 3
ATTACHMENT 3

REQUEST FOR RELIEF, 1-ISI-09
VENDOR DRAWING BEU-17811 AND D-17811

118L1-O/S

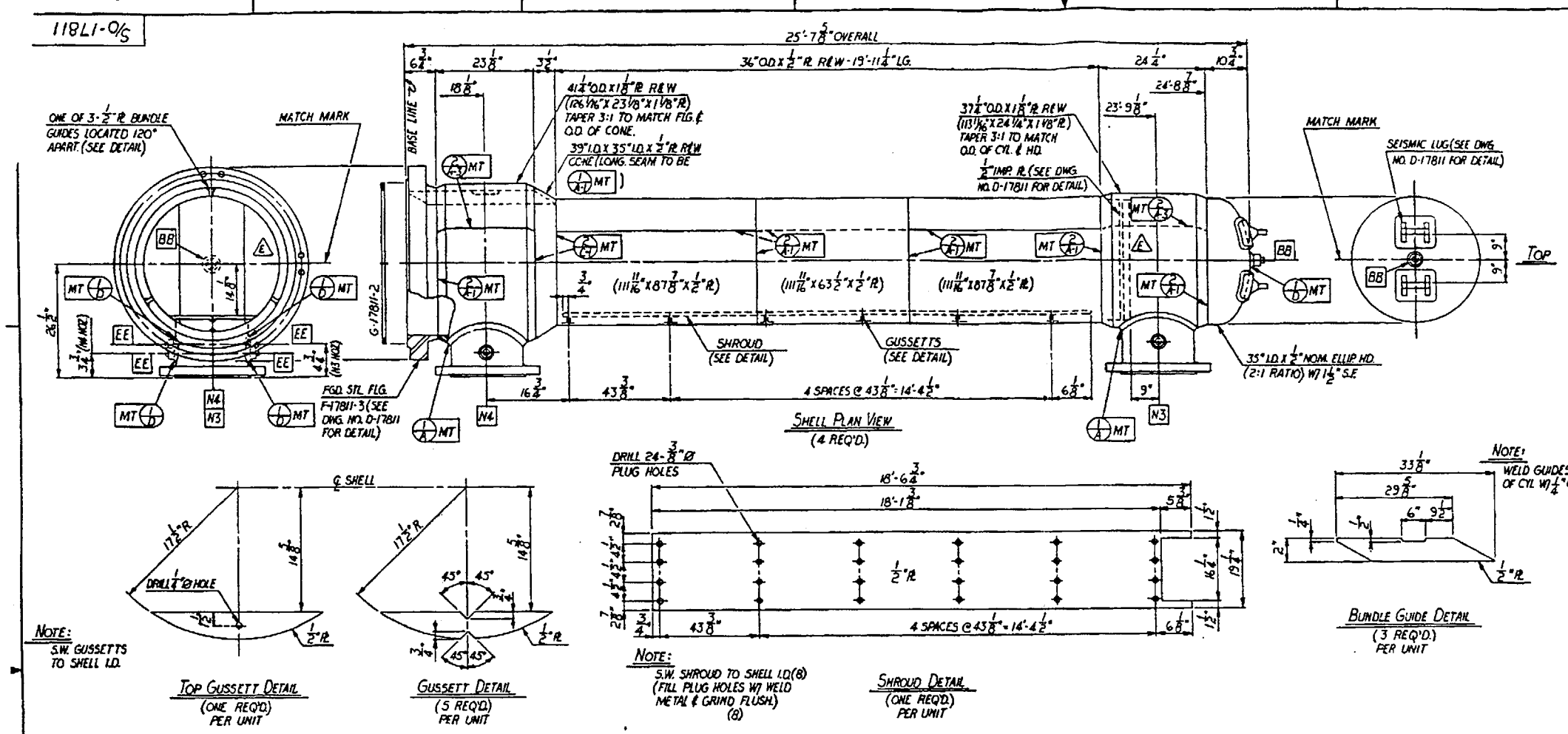

SHELL PLAN VIEW
(4 REQ'D.)

NOTE:
S.W. GUSSETTS TO SHELL I.D.

TOP GUSSETT DETAIL
(ONE REQ'D.)
PER UNIT

GUSSETT DETAIL
(5 REQ'D.)
PER UNIT

NOTE:
S.W. SHROUD TO SHELL I.D. (8)
(FILL PLUG HOLES W/ WELD METAL & GRIND FLUSH.)
(8)

SHROUD DETAIL
(ONE REQ'D.)
PER UNIT

NOTE:
WELD GUIDES TO I.D. OF CYL. W/ 1/4" C.F.W.

BUNDLE GUIDE DETAIL
(3 REQ'D.)
PER UNIT

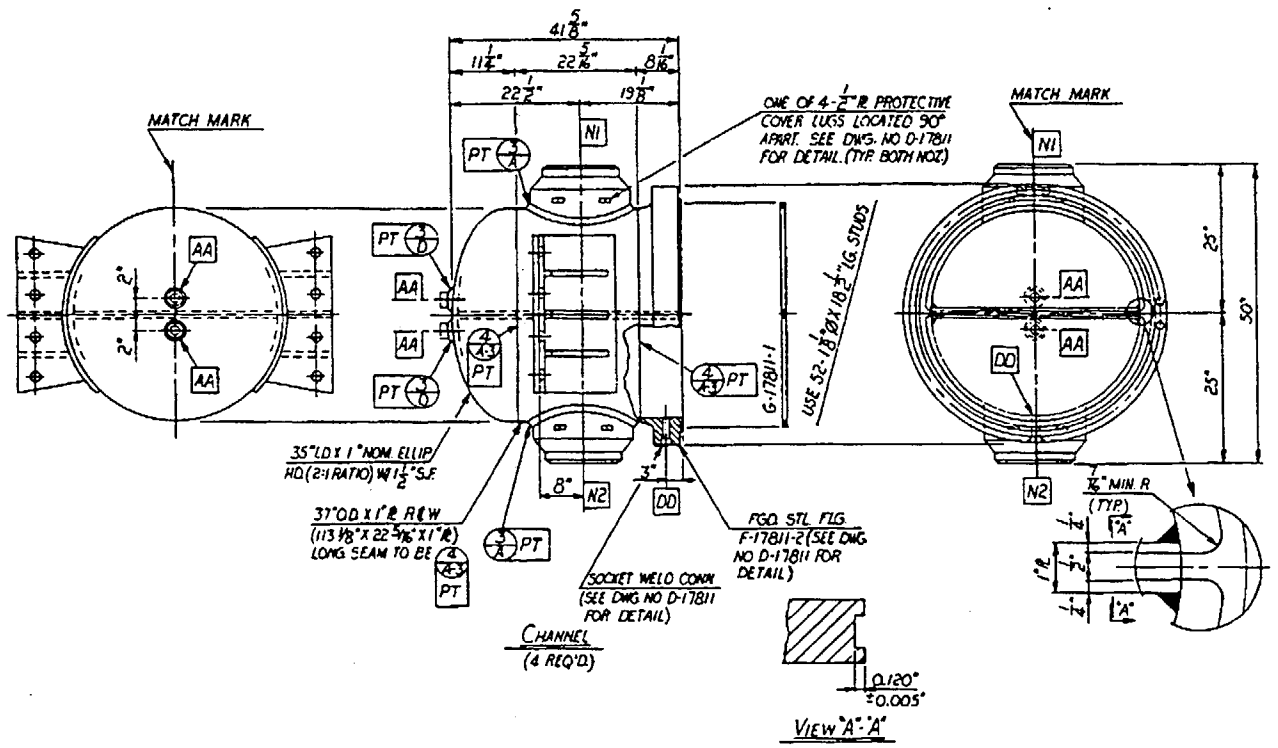

CHANNEL
(4 REQ'D.)

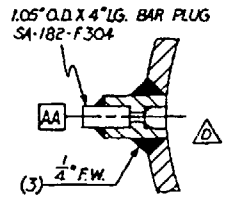

SOCKET WELD COUPLING TESTING PLUG

WELD PROCEDURES:
(1) 1SA (NO P.W.H.T.) (8-73)
(2) 1U.A1 (NO P.W.H.T.) (8-73)
(3) 855 REV 2 (1-75) W/ ACC. (2-75)
(4) 8U.A7 REV. 3 (2-75)
(5) 015304L (NO P.W.H.T.) REV. 3 W/ ADD. (5-75)
(6) 01U304L (NO P.W.H.T.) REV. 3 W/ ADD. (5-75)
(7) 1.855 (NO P.W.H.T.) REV. 3 W/ ADD.
(8) 1C.X.V (NO P.W.H.T.) 6-71

MATERIAL LIST	
PART	SPECIFICATION
SHROUD	STL ASME SA-516-70
GUSSETTS	DO.
CONE	DO.
BUNDLE GUIDES	DO.
CHAN. CYL.	STNLS. STL ASME SA-240 TP-304
CHAN. HD.	DO.
CHAN. FAI-T.	DO.
SHELL CYL.	STL ASME SA-516-70
SHELL HD.	DO.
STUDS	STL ASME SA-193-GR. B7
NUTS	STL ASME SA-194-GR. 2H
GASKETS	TP-304 STNLS. STL. SPIRAL WOUND W/ CANADIAN ASB. FILLER & STL. SPIRAL WOUND W/ CANADIAN ASB. FILLER.
DISTRIBUTOR CYL.	STL ASME SA-516-70

SCHEDULE OF OPENINGS FOR ONE UNIT ONLY
(4 UNITS REQ'D)

MK.	NO.	SIZE	SERIES & FLG	NECK	PROJ.	COUP.	REMARKS
N1	ONE	14"		REIN. NOZ. SA-336-F8 (SEE DWG. NO. D-17811 FOR DETAIL)	6 1/2"	NO	
N2	ONE	14"		REIN. NOZ. SA-336-F8 (SEE DWG. NO. D-17811 FOR DETAIL)	6 1/2"	NO	
N3	ONE	18"	150# WELDING NECK R.F. SA-105		7 7/8"	YES	
N4	ONE	18"	150# WELDING NECK R.F. SA-105		5 7/8"	YES	
AA	2	3/4"	FULL 6000# SOCKET WELD COUP. SA-182-F-304		—	—	
BB	ONE	3/4"	FULL 6000# PIPE COUP. SA-105		—	—	W/ SA-105 PLUG
CC	ONE	3/4"	DRILL & TAP FOR P.P.		—	—	W/ SA-105 PLUG
DD	ONE	3/4"	S.W. CONN.		—	—	
EE	4	3/4"	FULL 6000# PIPE COUP. SA-105		—	—	W/ SA-105 PLUG

INFORMATION ONLY

GENERAL NOTES

P.W.H.T. CHANNEL: NO
P.W.H.T. SHELL: NO
* RADIOGRAPH CHANNEL: YES FULL X-RAY (INCLUDING NOZ. TO CYL. WELDS)
* RADIOGRAPH SHELL: YES SPOT X-RAY
JOINT EFFICIENCY: CHAN. 100% SHELL 85%
INSPECTION CODE: YES CUSTOMER: YES
SEE DWG. NO. D-17811 FOR WELD BEVEL DETAIL.
ALL NOZZLE FLANGES TO BE IN ACCORDANCE W/ ANSI STANDARD B16.5 UNLESS OTHERWISE NOTED.
TUBES HEAT TREATED BY PLYMOUTH TUBE CO. PER WESTINGHOUSE SPECS.
FULL DYE PENETRANT INSPECT ALL ACCESSIBLE SURFACES OF #1 & #3 BODY FLANGES & STRLS. NOZ. NECKS AFTER MACHINING.
STUDS & NUTS TO HAVE A MANGANESE PHOSPHATE COATING OF PARCO-LUBE NO 2, THERMOIL GRANODINE 112 OR APPROVED EQ. THIS SHALL BE FOLLOWED BY THE APPLICATION OF A SOLID FILM LUBRICANT LUBE LOK #4006 OR APPROVED EQ.
DYE CHECK T.S. WELD OVERLAY FINAL WELD PASS, & AFTER MACHINING BUT BEFORE DRILLING
ALL THREADED OPENINGS TO HAVE BAR TYPE PLUGS.
ALL WELDS MKD (MT) SHALL HAVE ALL ACCESSIBLE SURFACES OF COMPLETED WELD MAGNETIC PARTICLE INSPECTED PER EFCO PROCEDURE NMP-2 REV. 1A
ALL WELDS MKD (PT) SHALL HAVE ALL ACCESSIBLE SURFACES OF COMPLETED WELD LIQUID PENETRANT EXAMINATION PER EFCO PROCEDURE NLP-2 REV. 1A
UNITS TO BE PREPARED FOR SHIPMENT PER EFCO SPECIFICATION PS 12100 REV. 1 (SEE DWG NO. D-17811 FOR SHIPPING COVER DETAILS)
UNITS TO BE TESTED PER EFCO SPECIFICATION HT-12100 REV. 1 & AT-1 REV. 1
SC-N1, REV. 2, 10-14-74 (SHOP CLEANING PROCEDURE) W/ SUPP. #1 REV 1A
* RT-2, REV. 1A

REV	DESCRIPTION	GRID	BY	DATE
E	REV IMP. R ORIENTATION	D-4E8	T.G.	9-30-75
D	CORRECTED AA COUP. FICTURE & REV N1 & N2	B-4	T.G.	8-22-75
	NOZ. MAT'L FROM F-304 TO F8	C-2		
C	REV. APPROVED WELD PROCEDURES	—	T.G.	6-6-75
B	ADDED DIST CYL. TO MATERIAL LIST	D-2	T.G.	3-1-75
A	REV. THICKNESS OF IMP. R, UPDATED WELD	C-5	T.G.	1-15-75
	PROCEDURES & REV. RADIOGRAPH OF CHAN	B-1	T.G.	1-15-75

EFCO
ENGINEERS AND FABRICATORS, CO.
HOUSTON, TEXAS 77008
MANUFACTURERS HEAT TRANSFER EQUIPMENT

NAME: SHELL & CHANNEL DETAILS
DRAWN BY: T.G. 9-18-74
JOB NO. 12100
CHECKED BY: R.B. 10-11-74
APPROVED BY: W.M. 10-18-74
DWG. NO. BEU-17811
REV. 2 (E)

WBN-REV
WBN PAGE 110

3-6-14

11811-0/5

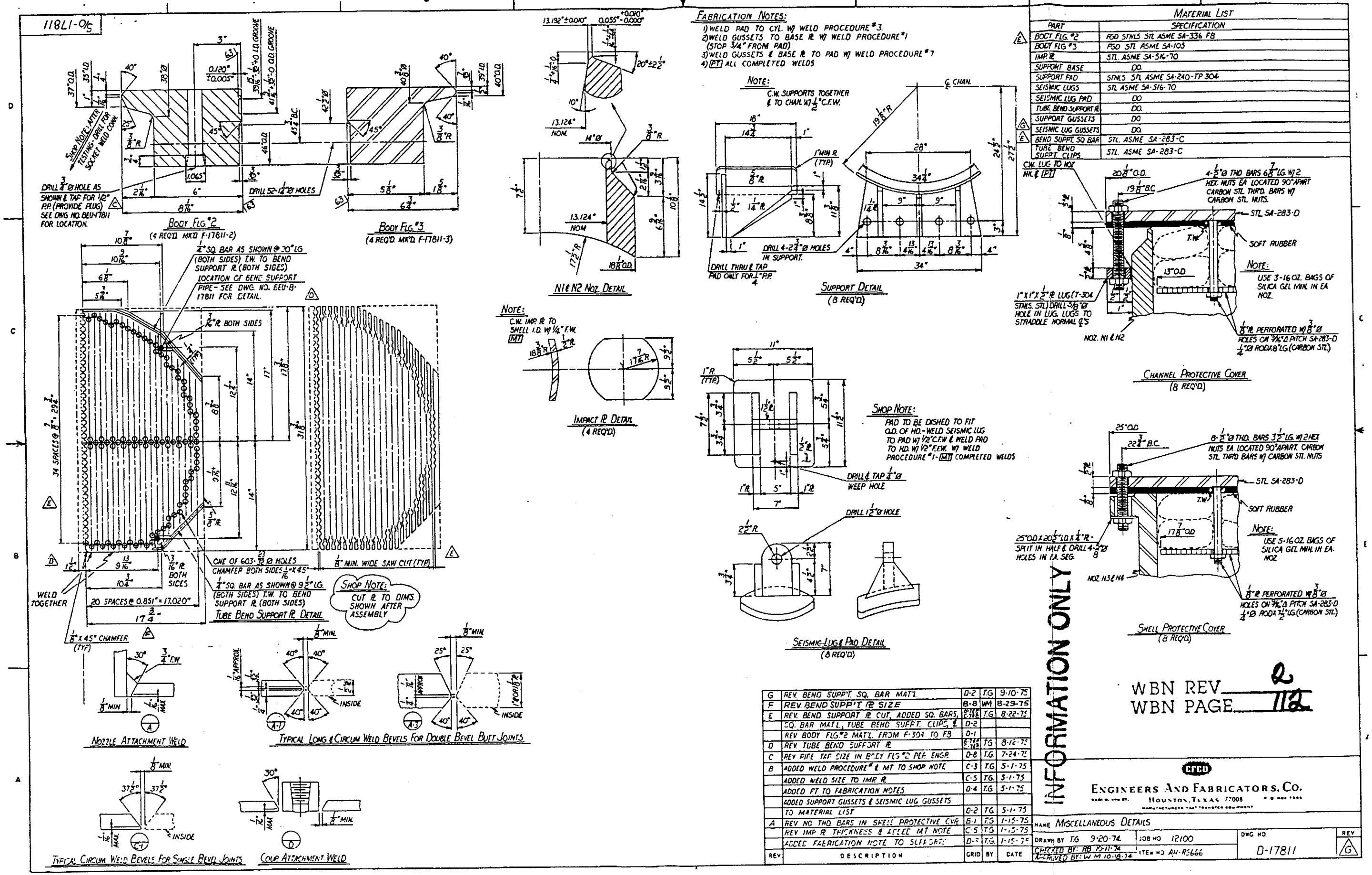

Material List	
PART	SPECIFICATION
BODY FLG. #2	FSD STNLS STL ASME SA-336 F8
BODY FLG. #3	FSD STL ASME SA-105
IMP. R	STL. ASME SA-516-70
SUPPORT BASE	DO.
SUPPORT PAD	STNLS STL ASME SA-240-TP 304
SEISMIC LUGS	STL ASME SA-516-70
SEISMIC LUG PAD	DO
TUBE BEND SUPPORT R.	DO.
SUPPORT GUSSETS	DO
SEISMIC LUG GUSSETS	DO.
BEND SUPPT. SQ BAR	STL. ASME SA-283-C
TUBE BEND SUPPT. CLIPS	STL. ASME SA-283-C

REV.	DESCRIPTION	GRID	BY	DATE
G	REV. BEND SUPP'T. SQ. BAR MAT'L	D-2	TG	9-10-75
F	REV. BEND SUPP'T R SIZE	B-8	WM	8-29-75
E	REV. BEND SUPPORT R CUT, ADDED SQ. BARS,	B-7/8, C-7/8	TG	8-22-75
	SQ. BAR MAT'L, TUBE BEND SUPP'T. CLIPS, &	D-2		
	REV BODY FLG. #2 MAT'L. FROM F-304 TO F8	D-1		
D	REV. TUBE BEND SUPPORT R	B-7/8, C-7/8	TG	8-12-75
C	REV PIPE TAP SIZE IN BODY FLG #2 PER ENGR.	D-8	TG	7-24-75
B	ADDED WELD PROCEDURE #7 & MT TO SHOP NOTE	C-3	TG	5-1-75
	ADDED WELD SIZE TO IMP. R	C-5	TG	5-1-75
	ADDED PT TO FABRICATION NOTES	D-4	TG	5-1-75
	ADDED SUPPORT GUSSETS & SEISMIC LUG GUSSETS			
	TO MATERIAL LIST	D-2	TG	5-1-75
A	REV NO. THD. BARS IN SHELL PROTECTIVE CVR	B-1	TG	1-15-75
	REV IMP R THICKNESS & ADDED MT NOTE	C-5	TG	1-15-75
	ADDED FABRICATION NOTE TO SUPPORTS	D-2	TG	1-15-75

INFORMATION ONLY

WBN REV 2
WBN PAGE 112

CFCI
ENGINEERS AND FABRICATORS, CO.
HOUSTON, TEXAS 77008
MANUFACTURERS HEAT TRANSFER EQUIPMENT

NAME MISCELLANEOUS DETAILS
DRAWN BY TG 9-20-74 | JOB NO. 12100 | DWG NO. D-17811 | REV G
CHECKED BY: RB 10-11-74
APPROVED BY: W M 10-18-74 | ITEM NO. AH-R5666

ENCLOSURE 3
ATTACHMENT 4

REQUEST FOR RELIEF, 1-ISI-09
EXAMINATION REPORT R-0574

TENNESSEE VALLEY AUTHORITY	EXAMINATION SUMMARY AND RESOLUTION SHEET	REPORT NUMBER: R-0574

PROJECT: WBN UNIT: 01 CYCLE 03A				COMPONENT ID: RHRHX-2-1A	
EXAMINATION METHOD				SYSTEM: RHRS	ISI DWG NO: CHM-2662-C-01
MT ☐	PT ☐	UT ☑	VT ☐	CONFIGURATION	CATEGORY
PROCEDURE: N-UT-18		REV 13	TC: N/A	VSHELL TO VSHELL	C-A
EXAMINER: D.Gronewold		EXAMINER: J.G.Abbott		EXAMINER:	EXAMINER:
LEVEL: II		LEVEL: II		LEVEL:	LEVEL:

An ultrasonic exam was performed on weld RHRHX-2-1A, a stainless steel shell to flange weld on the RHR heat exchanger.

A 45 deg. shearwave with a 1 1/2 V calibration was used. Also a 60 deg. RL was used due to the limitations from the flange and the support pads.

Root geometry was observed from both sides of the weld below recordable levels. No other indications were detected.

77.4 % bidirectional coverage was achieved, see attached limitation sheet

RESOLUTION BY	REVIEWED BY	ANII:
Douglas Gronewold	[signature]	B. Earnest
LEVEL II DATE: 8-29-00	LEVEL: III DATE: 9-5-00	DATE: 9/6/00
		Page: 1 OF 10

TENNESSEE VALLEY AUTHORITY	DIGITAL ULTRASONIC CALIBRATION DATA SHEET	REPORT NUMBER: R-0574

PROJECT: WBNP UNIT: 1 CYCLE: 3
PROCEDURE: N-UT-18 REV: 23 TC: N/A
INSTRUMENT: KB DUE DATE: 6-22-01
MODEL/TYPE: USN-50 SERIAL NO.: E24253
TRANSDUCER MANUF: KBA
S/N 009BDZ SIZE: .50" FREQ: 2.25 MHz
CABLE TYPE: RG-174 LENGTH: 72 inches

CALIBRATION DATE: 8-29-00
CALIBRATION BLOCK NO.: WB-15 TEMP: 72°F
SIMULATOR BLOCK NO: 790391
THERMOMTER S/N: 562781 DUE DATE: 6-6-01
COUPLANT ULTRAGEL II BATCH: 94125
EXAM TYPE: SHEAR ☒ LONG ☐ RL ☐

DAC

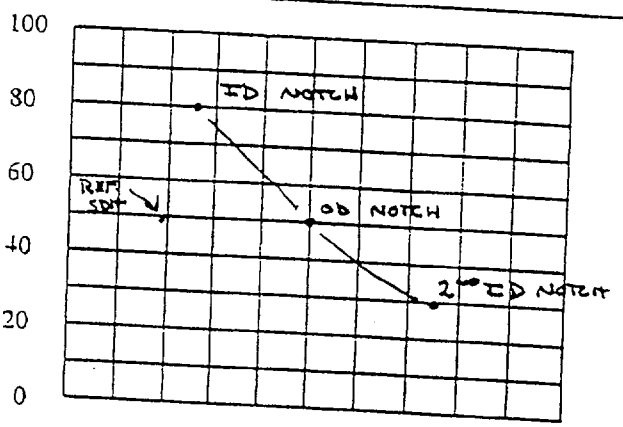

DISPLAY WIDTH: 5.727 inches
REF. REFLECTOR: ROMPAS SDH GAIN: 26.0 dB
AMPLITUDE: 49 % METAL PATH: 1.04 "

ANGLE VERIFICATION

BLOCK TYPE: Rompas S/N: 790391
NOMINAL ANGLE: 45 ACTUAL ANGLE: 45

INSTRUMENT SETTINGS

REFLECTOR			REFERENCE SENSITIVITY	MEMORY NUMBER
SCAN DIRECT.	NTCH	SDH		
AXIAL	☒	☐	20.0 dB	2
CIRC	☐	☐	FLAT BLOCK dB	

FREQ:	BB MHz	REJECT:	0 %
ANGLE:	45 deg	DAMPING:	FIXED ohms
DELAY:	5.219 msec	PULSER:	HIGH *
ZERO:	5.381 msec	FILTER:	FIXED *
VELOCITY:	.1216 msec	REP RATE:	FIXED
RANGE:	5.727 inches	TOF:	☒ PEAK ☐ FLANK
RECTIFIER:	FIXED	POWER:	BATT
DUAL:	☐ ON ☒ OFF	TCG:	☐ ON ☒ OFF

CALIBRATION TIMES

INITIAL TIME: 1030 FINAL TIME: 1400

VERIFICATION TIMES	1) 1225	2) 1245	3) 1305	4)	5)	6)	7)	8)	9)

* PDI QUALIFIED INSTRUMENT SETTINGS:
VERIFY INSTRUMENT SETTINGS AND CALIBRATION SEQUENCE ARE IN ACCORDANCE WITH TABLE 2 OF THE APPLICABLE PDI QUALIFICATION IMPLEMENTATION PROCEDURE !

LINEARITY CHECK

VERTICAL	SIGNAL 1		100	90	80	70	60	50	40	30	20	
	SIGNAL 2		50	45	40	35	30	25	20	15	10	
ATTENUATOR	GAIN	SET	-6 dB		-12 dB		SET		÷12		SET	+6
	AMP	80%	32 TO 48		16 TO 24		20 %		64 TO 96		40%	64 TO 96
			40		20				80			80

COMMENTS: ARTICLE 5 SECTION V
DETERMINATION OF GAIN CORRECTION
F = 23
RC = 4.5
R = 37/2 = 18.5
R/Rc = 18.5/4.5 = 4 NO GAIN CORRECTION REQUIRED. W W Bentley 9-5-00

WELDS/ITEMS EXAMINED:
RHRHX-1-1A
RHRHX-2-1A

EXAMINER: [signature] LEVEL: II
EXAMINER: [signature] LEVEL: II
REVIEWER: W W Bentley LEVEL: III DATE: 9-5-00
ANII: B. Cornish DATE: 9/16/00
PG.: 2 OF 10

TENNESSEE VALLEY AUTHORITY	DIGITAL ULTRASONIC CALIBRATION DATA SHEET	REPORT NUMBER: R-0574

ROJECT: WBNP UNIT: 1 CYCLE: 3

PROCEDURE: N-UT-18 REV: 23 TC: N/A

INSTRUMENT: KB DUE DATE: 6-22-01

MODEL/TYPE: USN-50 SERIAL NO.: E24253.

TRANSDUCER MANUF: RTD

S/N 99-1218 SIZE: 2(8x14) FREQ: 2.0 MHz

CABLE TYPE: RG-174 LENGTH: 72 inches

CALIBRATION DATE: 8-29-00

CALIBRATION BLOCK NO.: WB-15 TEMP: 72°F

SIMULATOR BLOCK NO: 790391.

THERMOMTER S/N: 562781. DUE DATE: 6-6-0

COUPLANT ULTRAGEL II BATCH: 94125.

EXAM TYPE: SHEAR ☐ LONG ☐ RL ☒

DAC

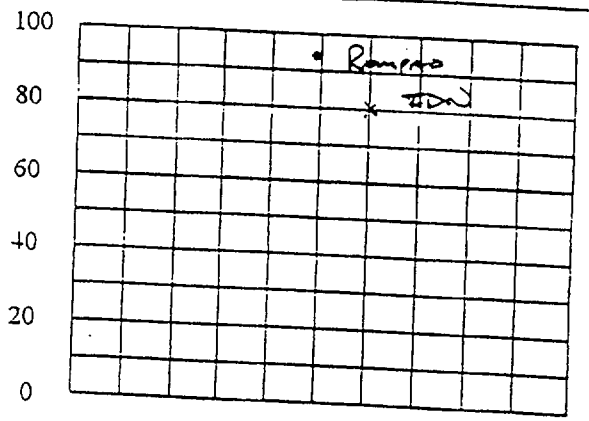

DISPLAY WIDTH: 3.242 inches

REF. REFLECTOR: Romeo SDH GAIN: 50.0 dB

AMPLITUDE: 95 % METAL PATH: 1.55 "

VERIFICATION TIMES | 1) 1305 | 2) 1315 | 3) 1330 | 4) | 5) | 6) | 7) | 8) | 9)

ANGLE VERIFICATION

BLOCK TYPE: Romeo S/N: 790391

NOMINAL ANGLE: 60 ACTUAL ANGLE: 60

INSTRUMENT SETTINGS

REFLECTOR			REFERENCE SENSITIVITY	MEMORY NUMBER
SCAN DIRECT.	NTCH	SDH		
AXIAL	☒	☐	56.0 dB	5
CIRC	☐	☐	dB	

FREQ:	8B	MHz	REJECT:	0 %
ANGLE:	60	deg	DAMPING:	Fixed ohm
DELAY:	9.211	msec	PULSER:	Dual *
ZERO:	9.213	msec	FILTER:	Fixed *
VELOCITY:	.2402	msec	REP RATE:	Fixed
RANGE:	3.242	inches	TOF:	☒ PEAK ☐ FLANK
RECTIFIER:	Fixed		POWER:	Batt.
DUAL:	☐ ON	☒ OFF	TCG:	☐ ON ☒ OFF

CALIBRATION TIMES

INITIAL TIME: 1045 FINAL TIME: 1410

* PDI QUALIFIED INSTRUMENT SETTINGS:
VERIFY INSTRUMENT SETTINGS AND CALIBRATION SEQUENCE ARE IN ACCORDANCE WITH TABLE 2 OF THE APPLICABLE PDI QUALIFICATION IMPLEMENTATION PROCEDURE !

LINEARITY CHECK

VERTICAL	SIGNAL 1		100	90	80	70	60	50	40	30	20	
	SIGNAL 2		50	45	40	35	30	25	20	15	10	
ATTENUATOR	GAIN	SET	-6 dB		-12 dB		SET		+12		SET	+6
	AMP	80%	32 TO 48		16 TO 24		20 %		64 TO 96		40%	64 TO 96
			40		20				80			80

COMMENTS: ARTICLE 5, SECTION 8
DETERMINATION OF GAIN CORRECTION
$E_1 = 252$
$R_c = 10$
$R = 37/2 = 18.5"$
$R/R_c = 18.5/10 = 1.85$ NO GAIN CORRECTION REQUIRED

WELDS/ITEMS EXAMINED:
RHCHX-1-1A
RHCHX-2-1A

EXAMINER: [signature] LEVEL: II

EXAMINER: [signature] LEVEL: II

REVIEWER: [signature] LEVEL: III DATE: 9-5-00

ANII: B. Earnings DATE: 9/16/00

PG.: 3 OF 10

TENNESSEE VALLEY AUTHORITY	ULTRASONIC PIPING EXAMINATION DATA SHEET	REPORT NUMBER: R-0574

ROJECT: WBN UNIT: 1 CYCLE: 3A

PROCEDURE: N-UT-18 REV: 23 TC: N/A

SYSTEM: RHR

COMPONENT ID: RHRHX-2-1A

C ONFIGURATION

SHELL TO FLANGE

DG 8-29-00 ~~FLOW~~ →

Wo REFERENCE: WELD ℄

Lo REFERENCE: ℄ OF INLET NOZZEL

EXAMINATION DATE: 8-29-00

START TIME: 1225 END TIME: 1315

EXAM SURFACE ☐ ID ☐ OD

MATL. TYPE: ☐ CS ☑ SS ☐ CSCL ☐ CCSS

SURFACE TEMP.: 82 °F PYRO. NO.: 562781

CAL DUE DATE: 6-6-01

EXAM ANGLE	45 DEG	60 RL DEG
CIRC. SCAN SENSITIVITY	32 dB	N/A dB
AXIAL SCAN SENSITIVITY	32 dB	62 dB

IND. NO.	L (in) FROM REF. L1	L MAX	L2	AT MAX AMP W MAX	MP MAX	D MAX	MAX AMP %DAC	EXAM NO. 3-14	NOM. ANG.	N R I	IND. INFO: TYPE, DAMPING, ETC.
							%	1	45°	✓	
							%	2	45°	✓	
							%	3	45°	✓	
							%	4	45°	✓	
							%	1	60° RL	✓	
							%	2	60° RL	✓	
							%				
							%				
							%				
							%				
							%				
							%				
							%				
							%				
							%				

REMARKS / LIMITATIONS: ROOT GEOMETRY OBSERVED 360° BELOW RECORDABLE LEVELS. NO OTHER INDICATIONS WERE DETECTED. ALL SCANS WERE PERFORMED ACROSS THE WELD. SEE LIMITATION SHEET FOR LIMITATIONS

EXAMINER: [signature] LEVEL: II ANII: B. Earnigh

EXAMINER: [signature] LEVEL: II DATE: 7/16/00

EVIEWER: [signature] LEVEL: III DATE: 9-5-00 PAGE 4 OF 10

TVA	WALL THICKNESS PROFILE SHEET	REPORT NO: R-0574

PROJECT: WBN
UNIT: 1

WELD NO: RHRHX-2-1A
SYSTEM: RHR

Record Thickness Measurements As Indicated, Including Weld Width, Edge-To-Edge At 0°

Position	0°	90°	180°	270°
1	.99			
2	1.05			
3	1.175		N/A	
4	N/A			
5	N/A			

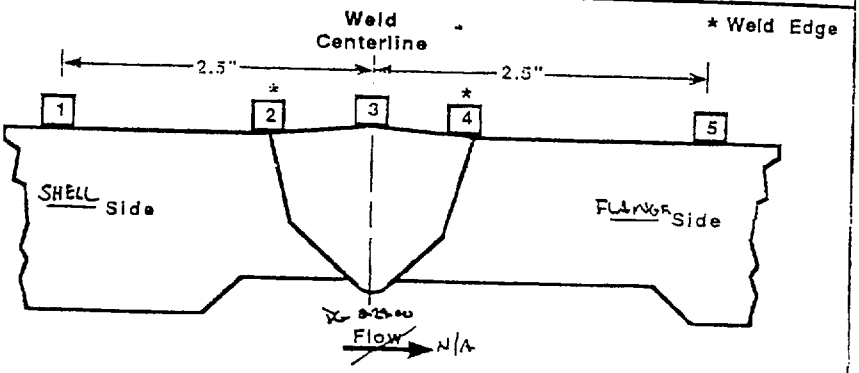

CROWN HEIGHT: .1"
CROWN WIDTH: 1.4"
DIAMETER: 37"
WELD LENGTH: 116.5"

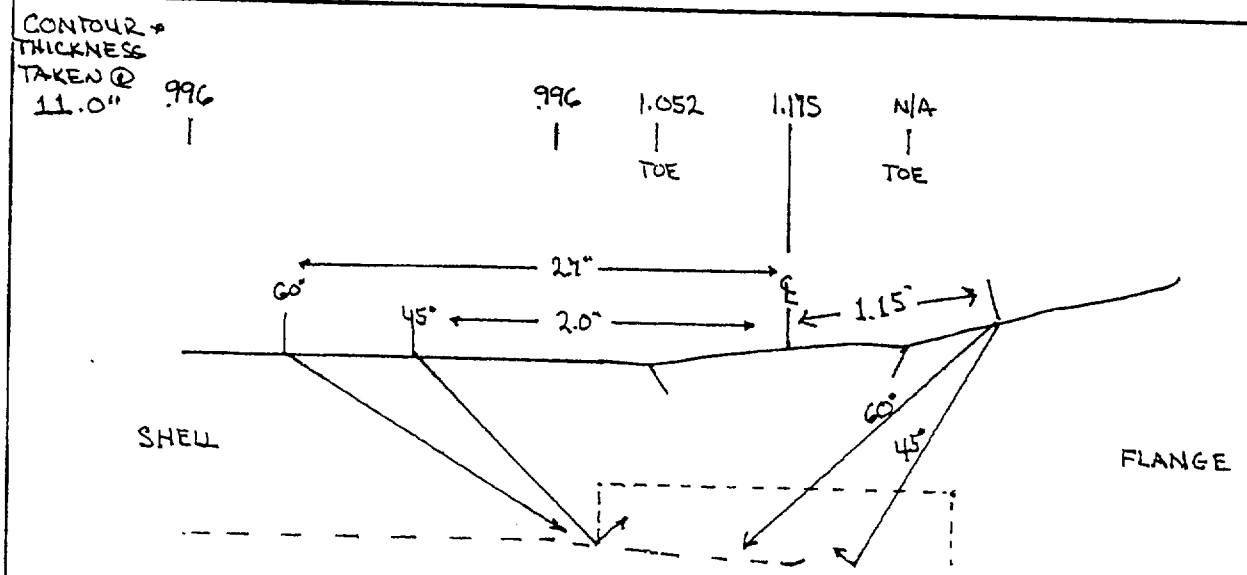

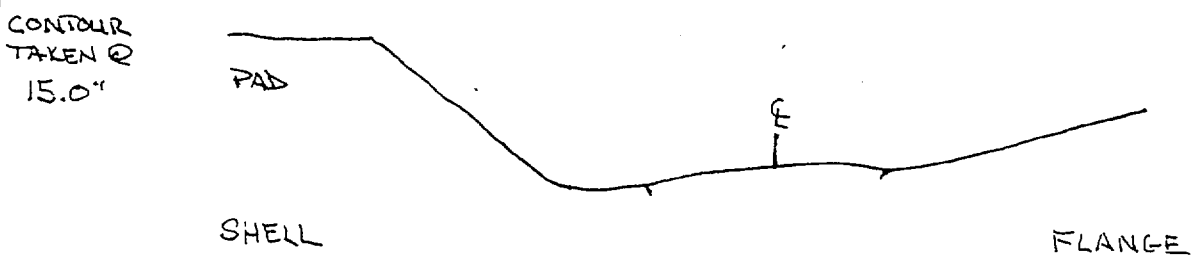

EXAMINER: Douglas Greenwell
LEVEL: II
DATE: 8-29-00

REVIEWED BY: [signature]
LEVEL: III
DATE: 9-5-00

ANII: B. Eamigh
DATE: 9/5/00

PAGE 5 OF 10

TVA 19668 (NP-5-89)

1-108-999-44

R-0574

Weld # RHRHX-2-1A "Coverage Area"

22.6% of the weld with no coverage

77.4% of the weld with Bi-directional coverage

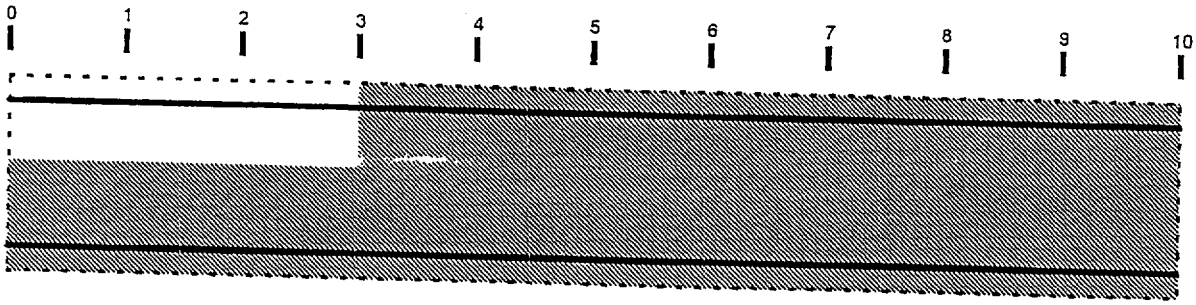

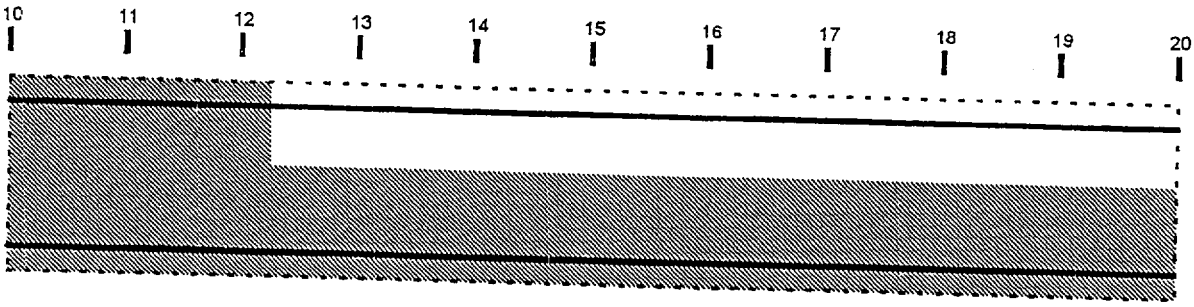

Doyle Bremerell 8-29-00

6 of 10

R-0574

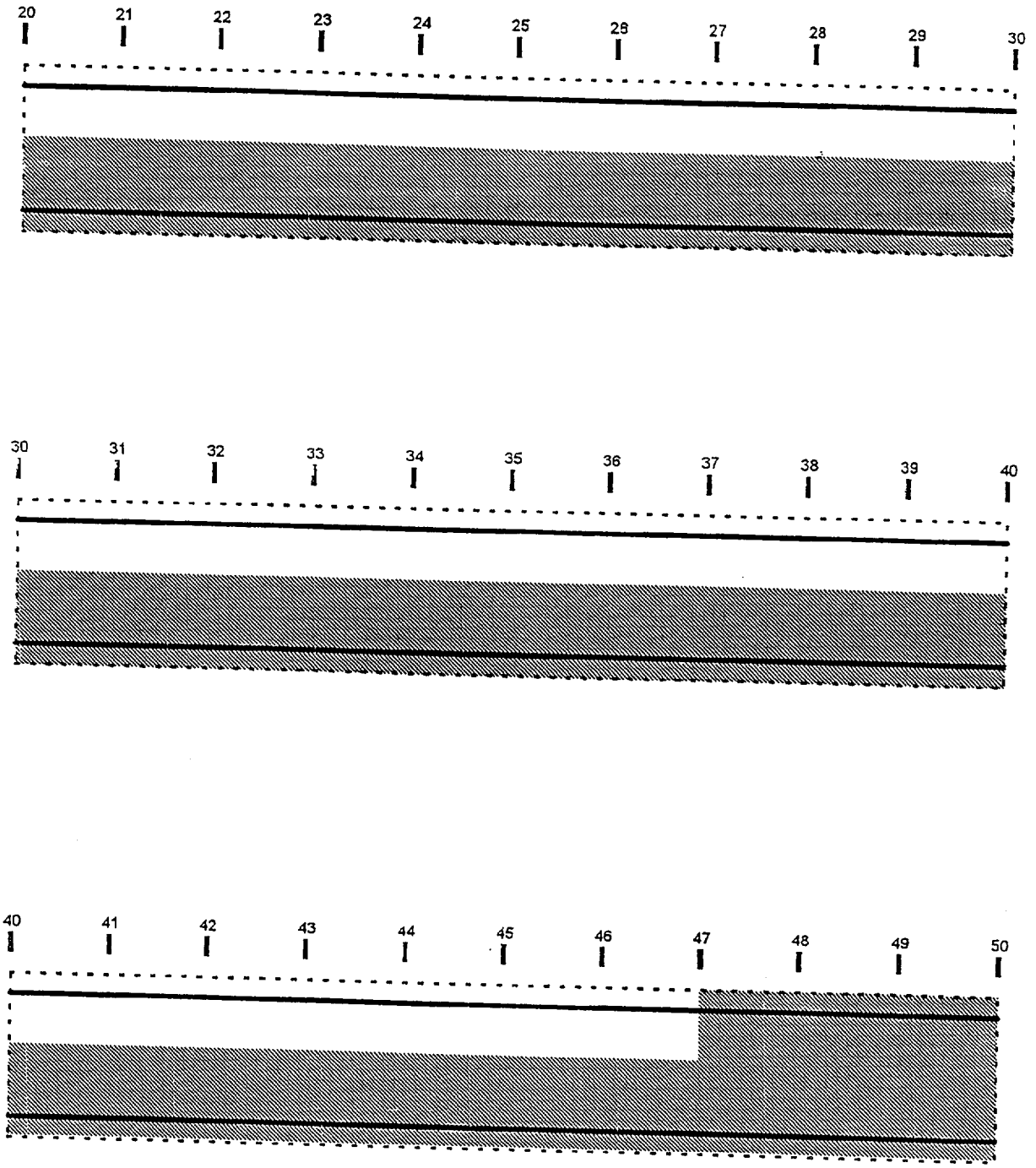

Douglas Greenwell 8-29-00

R-0574

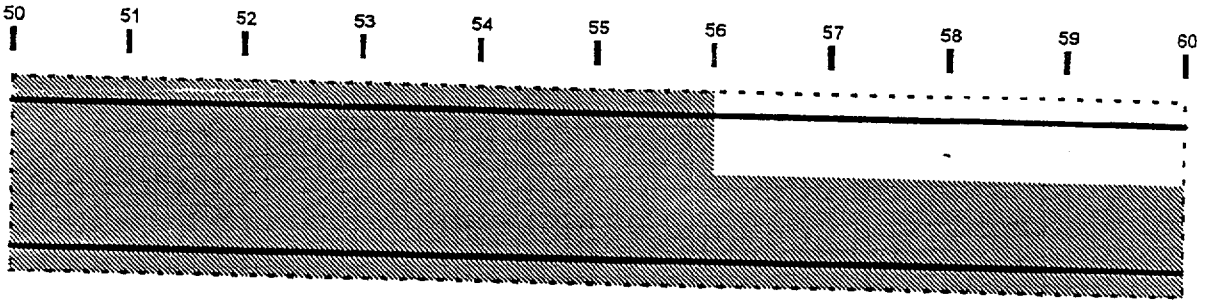
50
51
52
53
54
55
56
57
58
59
60

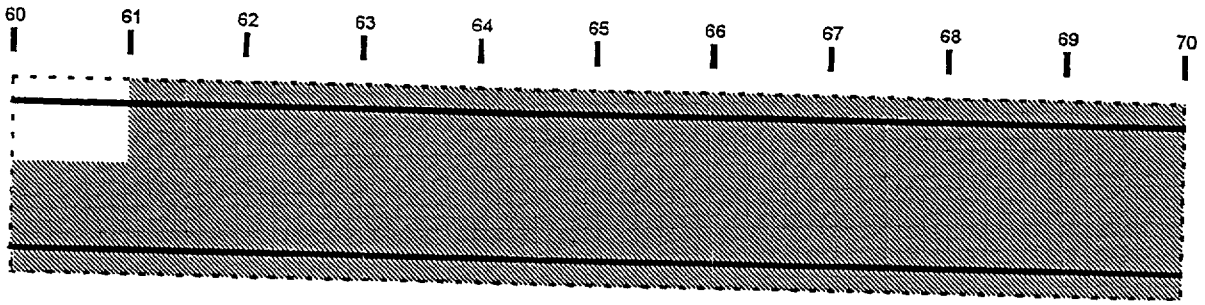
60
61
62
63
64
65
66
67
68
69
70

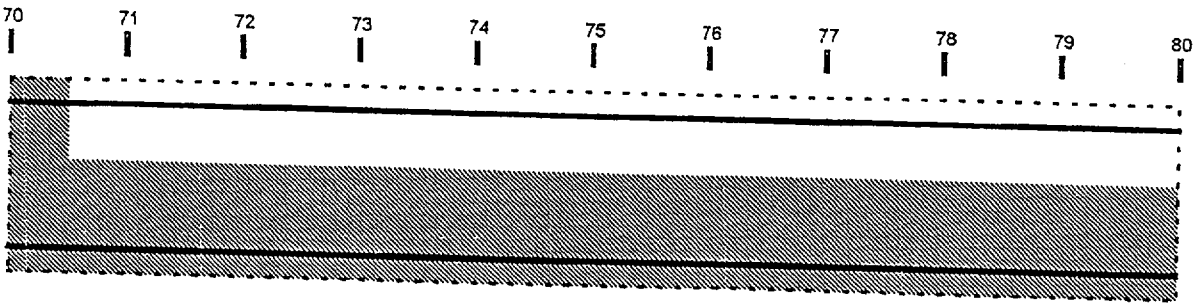
70
71
72
73
74
75
76
77
78
79
80

8-29-00

R-0574

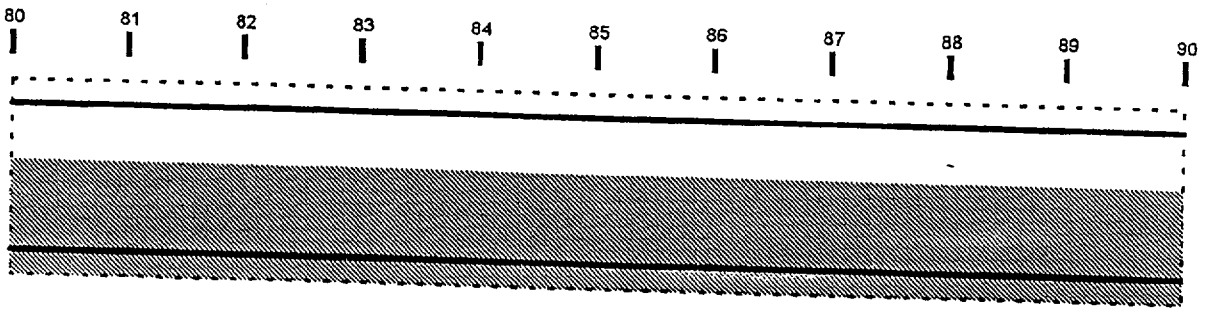

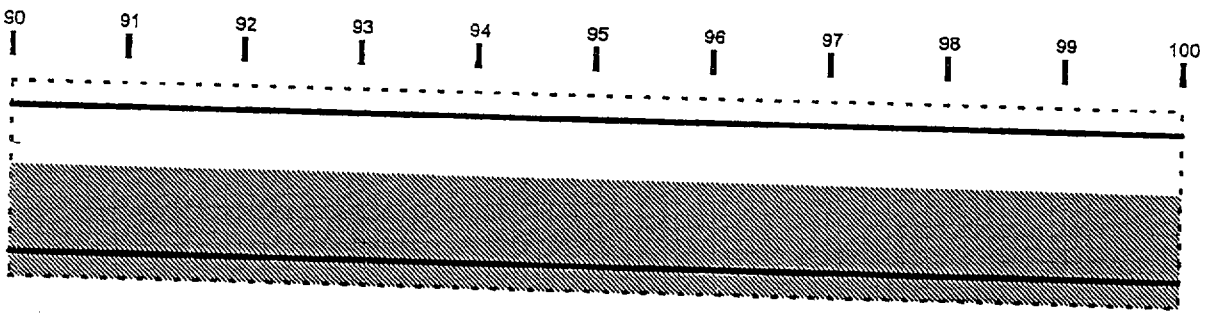

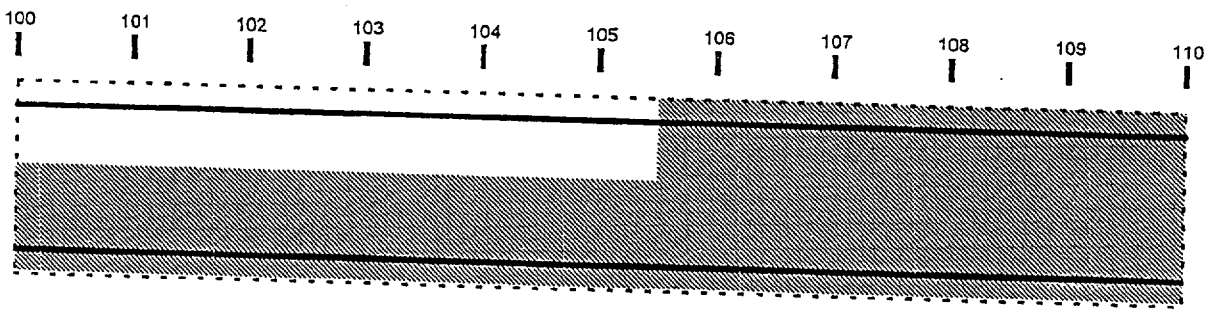

Dyla Arnenold 8-29-00

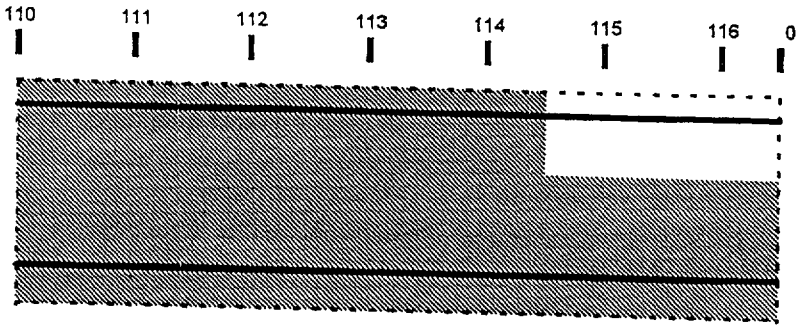

D. G. Greenwald 8-29-00

ENCLOSURE 4

WATTS BAR NUCLEAR PLANT
INSERVICE INSPECTION PROGRAM
REQUEST FOR RELIEF, 1-ISI-10

ENCLOSURE 4

WATTS BAR NUCLEAR PLANT
FIRST 10-YEAR INTERVAL
REQUEST FOR RELIEF, 1-ISI-10

SUMMARY:

Due to configuration of the Boron Injection Tank support, surface examination of the integrally welded attachments during the Unit 1 Cycle 3 refueling outage resulted in less than essentially 100% of ASME code coverage being achieved. The tank is supported by four legs which are attached to the tank by four 16-inch X 12.5-inch pads welded directly to the shell. The pads are considered integrally welded attachments and are required to be examined by a surface method in accordance with Code Case N-509 Table 2500-1, Examination Category C-C, Item Number C3.10. The surface examination requirement is illustrated by Figure IWC-2500-5(b). As indicated on Drawing ISI-0053-C-01, the support leg covers the lower end of the pad preventing the surface examination on this portion of the weld. The examination resulted in approximately 78% of code required coverage being achieved on each of the 4 integrally welded attachments.

Conformance to the code requirement is impractical to implement due to physical restrictions, therefore, relief is requested in accordance with 10CFR50.55a(g)(5)(iii).

I. COMPONENT:

Boron Injection Tank Integrally Welded Attachments
Reference ISI Drawing ISI-0053-C-01 (Attachment 1), identifiers BIT-5-IA, BIT-6-IA, BIT-7-IA, and BIT-8-IA.

II. CODE REQUIREMENT:

Code Case N-509, Table IWC-2500-1, Examination Category C-C, Item Number C3.10, surface examination requirement as defined by Figure IWC-2500-5 (Attachment 2).

III. CODE REQUIREMENTS FROM WHICH RELIEF IS REQUESTED:

Relief is requested from performing the required surface examination on essentially 100% of the examination surface of the Boron Injection Tank integrally welded attachments.

IV. BASIS FOR RELIEF:

The design configuration of the Boron Injection Tank integrally welded attachments preclude a surface examination of the required area. The design configuration limits the surface examination of the code required examination surface area to approximately 78% on each of the four integrally welded attachments.

V. ALTERNATIVE EXAMINATION:

A surface examination of the boron injection tank integrally welded attachments was performed on accessible areas to the extent practical given the design configuration of the tank and attachment.

VI. JUSTIFICATION FOR THE GRANTING OF RELIEF:

Due to configuration of the boron injection tank support, surface examination of the integrally welded attachments during the Unit 1 Cycle 3 refueling outage resulted in less than essentially 100% of ASME Code coverage being achieved. The tank is supported by four legs which are attached to the tank by four 16-inch X 12.5-inch pads welded directly to the shell. The pads are considered integrally welded attachments and are required to be examined by a surface method in accordance with Code Case N-509 Table 2500-1, Examination Category C-C, Item Number C3.10. The surface examination requirement is illustrated by Figure IWC-2500-5(b). As indicated on ISI Drawing, ISI-0053-C-01, the support leg covers the lower end of the pad preventing the surface examination on this 12.5-inch portion of the weld. The examination resulted in approximately 78% of code required coverage being achieved on each of the 4 integrally welded attachments. A typical description of the limited examination area is documented on examination report R-0600 (Attachment 3).

It would be impractical to remove the support leg as the legs are welded directly to the support pad. Other examination methods were also considered but cannot be performed due to the access limitation.

Conformance to the code requirement is impractical to implement due to physical restrictions, therefore, relief is requested in accordance with 10CFR50.55a(g)(5)(iii).

VII. IMPLEMENTATION SCHEDULE:

This Request for Relief is applicable to WBN's first inspection interval.

ENCLOSURE 4

WATTS BAR NUCLEAR PLANT
INSERVICE INSPECTION PROGRAM
REQUEST FOR RELIEF, 1-ISI-10
LIST OF ATTACHMENTS

Attachment 1. ISI-0053-C-01

Attachment 2. ASME Section XI Figure IWC-2500-5, Integrally Welded Attachments

Attachment 3. Examination Report R-0600 (typical of all four reports)

ENCLOSURE 4
ATTACHMENT 1

REQUEST FOR RELIEF, 1-ISI-10
ISI DRAWING ISI-0053-C-01

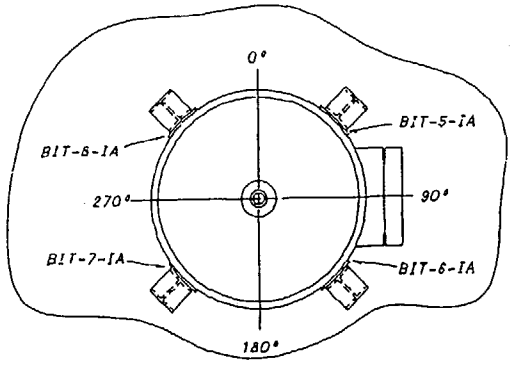

INTEGRAL ATTACHMENTS

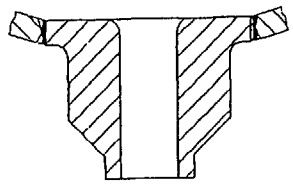

DETAIL A

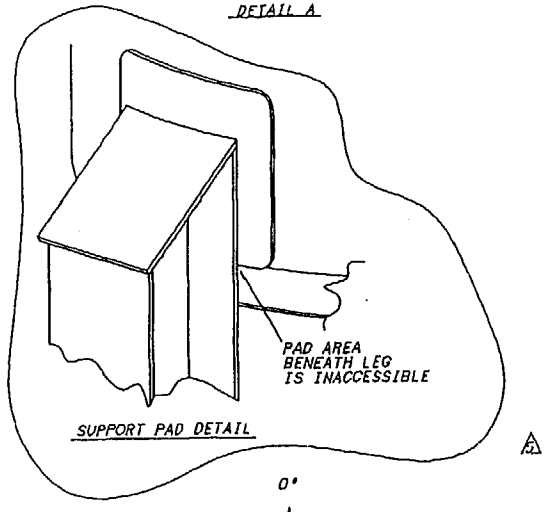

SUPPORT PAD DETAIL

REFERENCE DRAWINGS
WESTINGHOUSE 1100E48
WBN E-2879 IC-74

MATERIAL SPECIFICATIONS

TANK
SHELL
SA-351 CF8A
3.12" NOM.
HEADS
SA240 TP 304
2.00" NOM

NOZZLES
6", SA182 F 304

BOLTING
STUDS
SA 193 GR. B7
2.50-8UN-2A X 13.50
NUTS
SA 193 GR. 2H
2.50-8UN-2B HYY.

ASME CC-2 (EQUIVALENT)

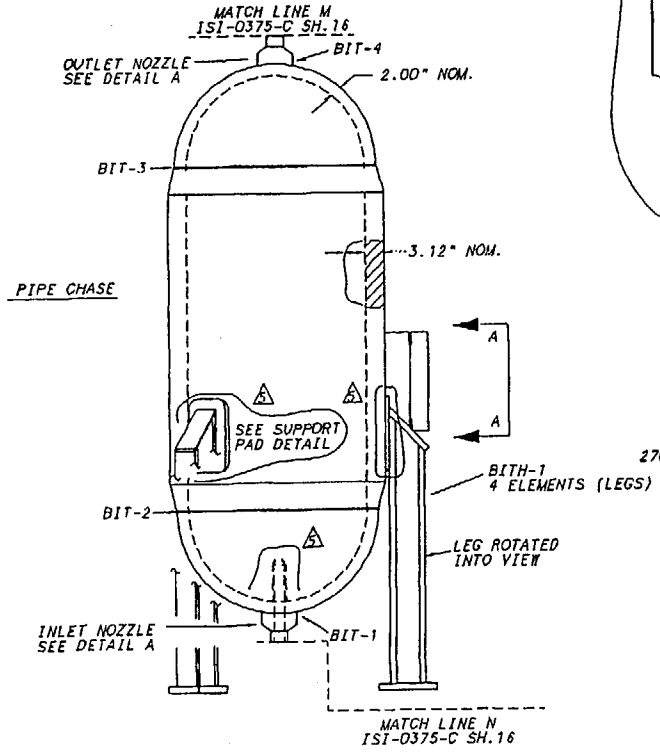

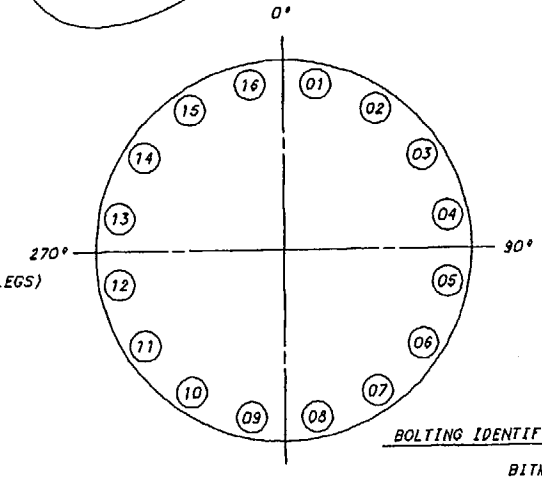

BOLTING IDENTIFIER

BITMWCB-XX

BOLT LOCATIONS 01-16

SECTION A-A

REV.	BY	CHECKED	SUBMITTED	APPROVED	DATE
5	PHB	KEC	TLH	MDO	12-11-00
ADD SUPPORT PADS, SUPPORT PAD DETAIL, AND SPARGER PER FCDT 00-04					
4	PHB	KEC	GLB	RDB	2-7-96
MADE G-SIZE, ADD SUPPORT ID, ADD SIZE TO MATERIAL SPEC					
3	PHB	PHB	GLB	FAK	3-22-95
MOVE SI WELDS -6, -7, STS-162 TO ISI-0375-C SH. 16, REVISE TITLE BLOCK					
2	HPC	PHB	KEC	GLB	6-28-93
REVISE IDENTIFIERS FOR PAISIM, ADD CONTINUATIONS, & REDRAWN ON CAD					
1	KEV	JCC		GLB	1-14-83
CHANGED GLASS DESIGNATIONS AND ADD MOOD LOCATION					

TENNESSEE VALLEY AUTHORITY

WATTS BAR NUCLEAR PLANT
UNIT 1
BORON INJECTION TANK
WELD AND SUPPORT LOCATIONS

DRAWN: KEV	DATE: 2-19-82	SCALE: NOT TO SCALE	
CHECKED: DAD	APPROVED: GLB	CAD MAINTAINED DRAWING	REV
SUBMITTED:	ISI-0053-C-01		05

ENCLOSURE 4
ATTACHMENT 2

REQUEST FOR RELIEF, 1-ISI-10
ASME SECTION XI FIGURE IWC-2500-5

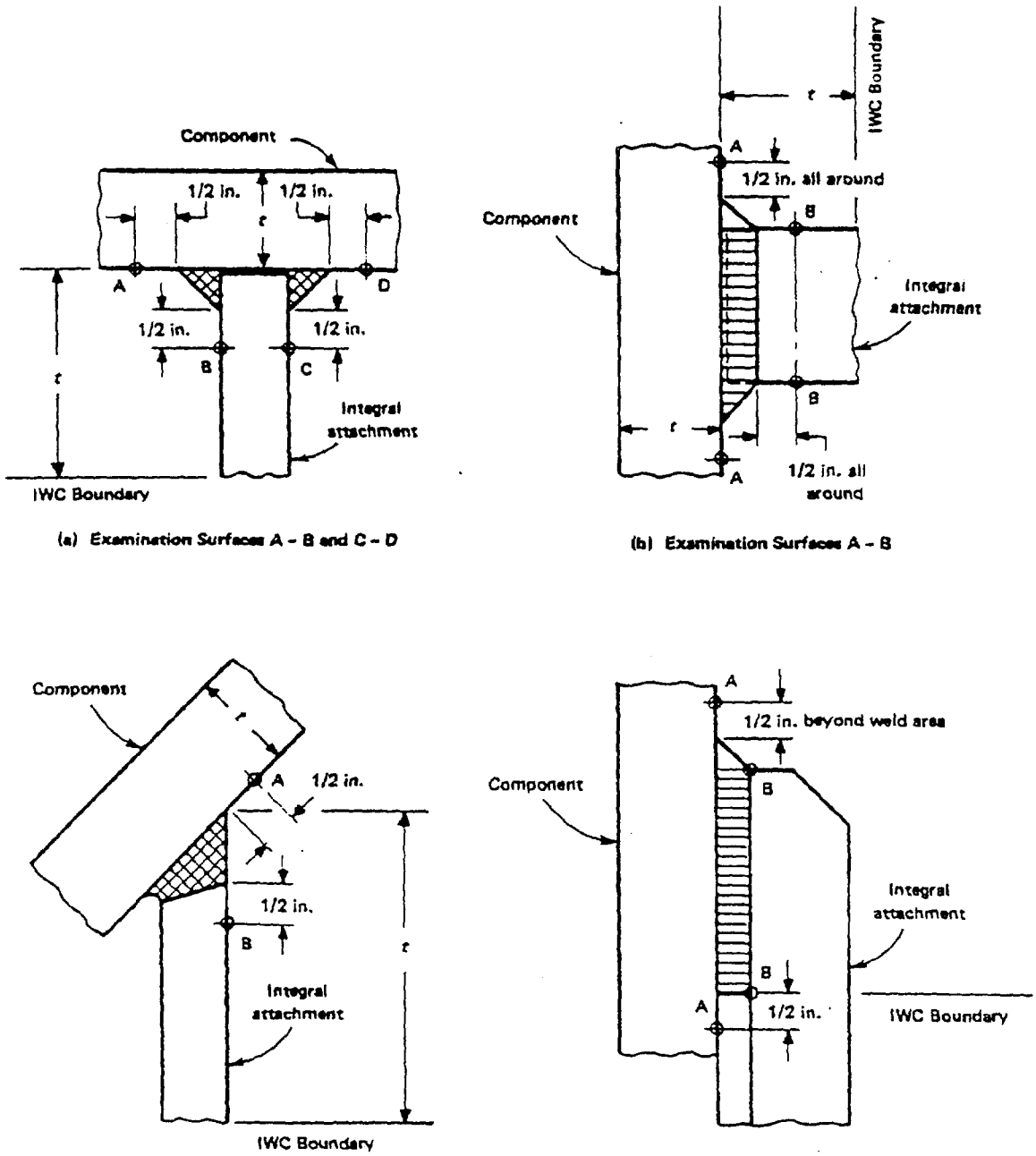

FIG. IWC-2500-5 INTEGRALLY WELDED ATTACHMENTS

ENCLOSURE 4
ATTACHMENT 3

REQUEST FOR RELIEF, 1-ISI-10
EXAMINATION REPORT R-0600

TENNESSEE VALLEY AUTHORITY	RECORD OF LIQUID PENETRANT EXAM	REPORT NUMBER R-0600

PROJECT: WBN UNIT: 1 CYCLE: 03A
SYSTEM: SIS
WELD/COMPONENT ID: BIT-5-IA
CONFIG.: VIWA TO VSHELL
PROCEDURE: N-PT-9 REV.: ~~29~~ 1 TC: N/A
EXAMINATION CODE 89E-01
CODE CLASS: 2 CATEGORY: C-C

EXAMINATION DATE Sept 8 2000
START TIME 0803 END TIME: 0945
EXAM SURFACE: ID ☐ OD ☑
PRESERVICE ☐ INSERVICE ☑
REF. DRAWING NO.: WX1100E48

ACCEPTANCE CRITERIA
☐ APPDX. A ☑ APPDX. B
☐ OTHER:

METHOD OF EXAMINATION

METHOD		PENETRANT MATERIALS
WATER-WASHABLE FLUORESCENT DYE:	☐	BRAND NAME: Magnaflux
POST-EMULSIFIABLE FLUORESCENT DYE:	☐	PENETRANT SKL-SP BATCH: 94M05K
SOLVENT-REMOVABLE FLUORESCENT DYE:	☐	REMOVER: SKC-S BATCH: 98L07K
WATER-WASHABLE VISIBLE DYE:	☐	DEVELOPER: SKD-S2 BATCH: 96J08K
POST-EMULSIFIABLE VISIBLE DYE:	☐	BLACK LIGHT
SOLVENT REMOVABLE VISIBLE DYE:	☑	METER S/N: N/A AL. DUE DATE: N/A

PART TEMP: 81 °F PYROMETER S/N: 522343 CAL. DUE DATE: 06/06/01

EXAMINATION RESULTS SATISFACTORY: ☑ UNSATISFACTORY: ☐ NOI NO.: N/A

EXPLANATION OF EXAM RESULTS:
No reportable indications.

COMMENTS/LIMITATIONS:

EXAMINER: Casey L. La Forge LEVEL: II
~~EXAMINER:~~ TRAINEE* LEVEL: TR.
REVIEWER: LEVEL: III DATE: 9.12.00

ANII:
DATE: 9-16-00
PAGE: 1 OF 2

* DOCUMENT TRAINING

R-0600

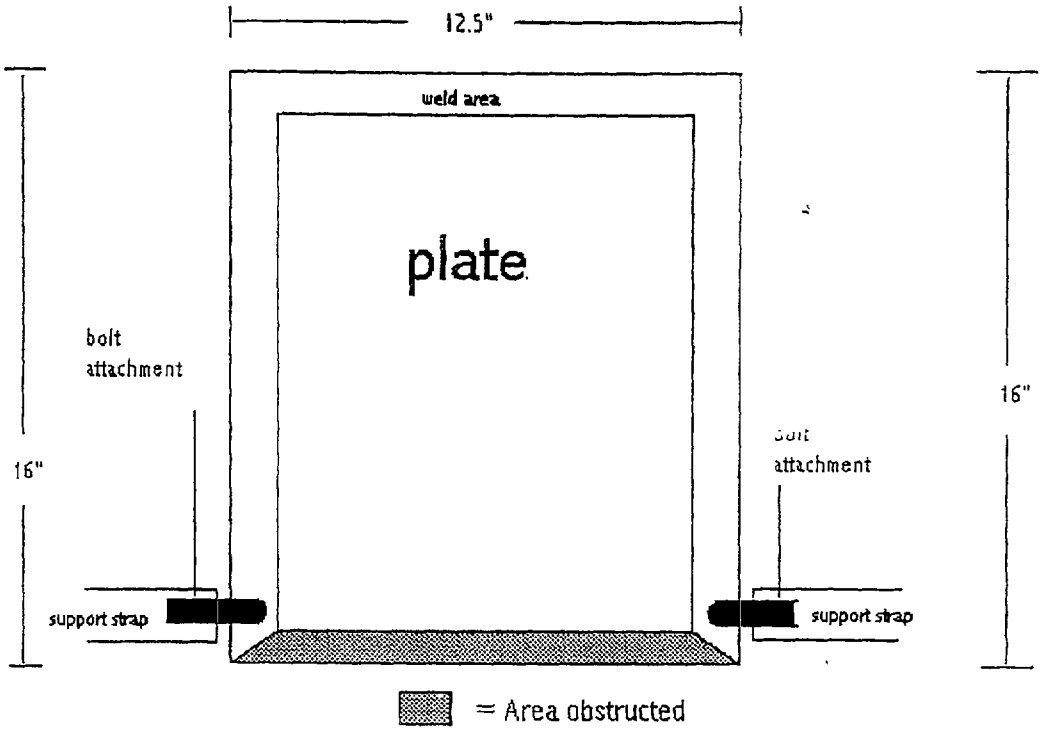

LIMITATION DRAWING BIT-5-IA
APPROXIMATELY 78% OF CODE RE-
QUIRED COVERAGE ACHIEVED. LIMITATION
DUE TO CONFIGURATION.

2 of 2

Carey L. Hoya
Level II 9/8/2000

ENCLOSURE 5

WATTS BAR NUCLEAR PLANT
INSERVICE INSPECTION PROGRAM
REQUEST FOR RELIEF, 1-ISI-11

ENCLOSURE 5

WATTS BAR NUCLEAR PLANT
FIRST 10-YEAR INTERVAL
REQUEST FOR RELIEF, 1-ISI-11

SUMMARY:

Volumetric examination of the Boron Injection Tank shell-to-head welds during the Unit 1 Cycle 3 refueling outage resulted in less than essentially 100% of ASME code coverage being achieved due to the geometric configuration of the shell-to-head circumferential welds and the material of the shell (CF8A). The geometric configuration (taper) of the shell and the CF8A shell material prevents an effective scan from the shell side which prevents full examination coverage. Volumetric examination of this component is required in accordance with ASME Section XI Table IWC-2500-1, Examination Category C-A, Item Number C1.20. The full volume weld examination requirement is illustrated by Figure IWC-2500-1.

Conformance to the code requirement is impractical to implement due to physical restrictions, therefore, relief is requested in accordance with 10CFR50.55a(g)(5)(iii).

I. COMPONENT:

Boron Injection Tank Shell-to-Head Circumferential Welds - Reference ISI Drawing CHM-0053-C-01 (Attachment 1), identifiers BIT-2 and BIT-3.

II. CODE REQUIREMENT:

ASME Section XI, 1989 Edition, Table IWC-2500-1, Examination Category C-A, Item Number C1.20, volumetric examination requirement as defined by Figure IWC-2500-1 (Attachment 2).

III. CODE REQUIREMENTS FROM WHICH RELIEF IS REQUESTED:

Relief is requested from performing the required volumetric examination on essentially 100% of the full volume of the Boron Injection Tank shell-to-head circumferential welds.

IV. BASIS FOR RELIEF:

The geometric configuration (taper) of the shell and the CF8A shell material prevents an effective scan from the shell side which prevents full examination coverage. The design configuration limits ultrasonic examination of the code required examination volume to approximately 60% for weld BIT-2 and 63% for weld BIT-3.

V. ALTERNATIVE EXAMINATION:

The code required 100% volumetric examination of the full volume of the boron injection tank shell-to-head circumferential welds was performed on accessible areas to the extent practical given the design configuration of the shell-to-head weld.

VI. JUSTIFICATION FOR THE GRANTING OF RELIEF:

The geometric configuration (taper) of the shell and the CF8A shell material prevents an effective scan from the shell side which prevents full examination coverage. Volumetric examination of this component is required in accordance with ASME Section XI Table IWC-2500-1, Examination Category C-A, Item Number C1.20. The full volume weld examination requirement is illustrated by Figure IWC-2500-1.

Vendor drawing E110048 Sheet 1 of 2 (Attachment 3) shows the shell-to-head configuration. As noted on Examination Reports R-0690 and R-0691 (Attachment 4), no scan was performed from the shell side of the weld. The shell material is SA-351, CF8A. With present technology, only a 45° RL large transducer scan is being performed on CF8A material. Due to the taper of the shell, i.e. the 3:1 minimum bevel due to wall thickness differences between the shell and head, the 45° scan would be ineffective. As described on the examination reports, approximately 60% code coverage for weld BIT-2 and 63% code coverage for weld BIT-3 was achieved on the required weld examination volume.

Conformance to the code requirement is impractical to implement due to physical restrictions, therefore, relief is requested in accordance with 10CFR50.55a(g)(5)(iii).

VII. IMPLEMENTATION SCHEDULE:

This Request for Relief is applicable to WBN's first inspection interval.

ENCLOSURE 5

WATTS BAR NUCLEAR PLANT
FIRST 10-YEAR INTERVAL
REQUEST FOR RELIEF, 1-ISI-11
LIST OF ATTACHMENTS

Attachment 1. ISI Drawing ISI-0053-C-01

Attachment 2. ASME Section XI Figure IWC-2500-1, Vessel Circumferential Welds

Attachment 3. Vendor Drawing 1100E48, Sheet 1

Attachment 4. Examination Data Reports:

Ultrasonic Examination Report R-0690 for Weld BIT-2
Ultrasonic Examination Report R-0691 for Weld BIT-3

ENCLOSURE 5
ATTACHMENT 1

REQUEST FOR RELIEF, 1-ISI-11
ISI DRAWING ISI-0053-C-01

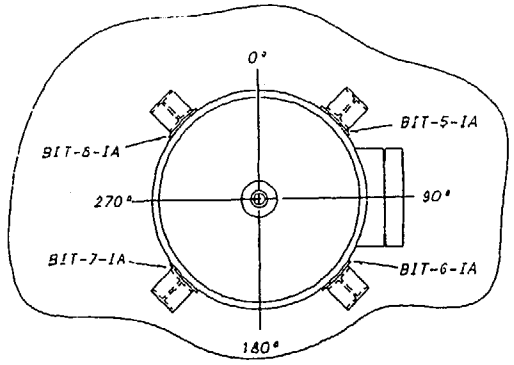

INTEGRAL ATTACHMENTS

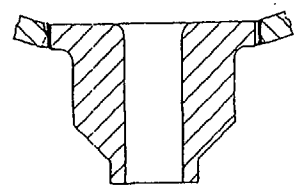

DETAIL A

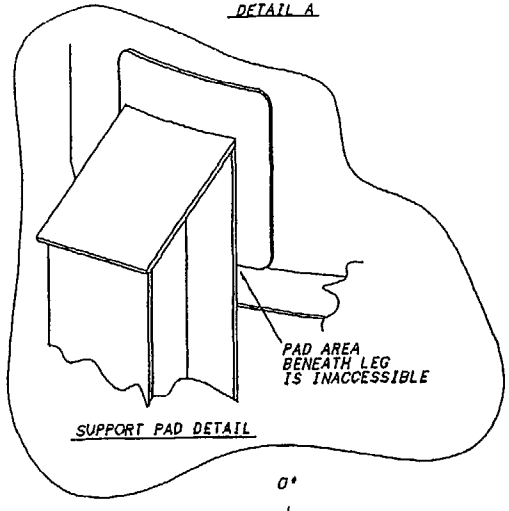

SUPPORT PAD DETAIL

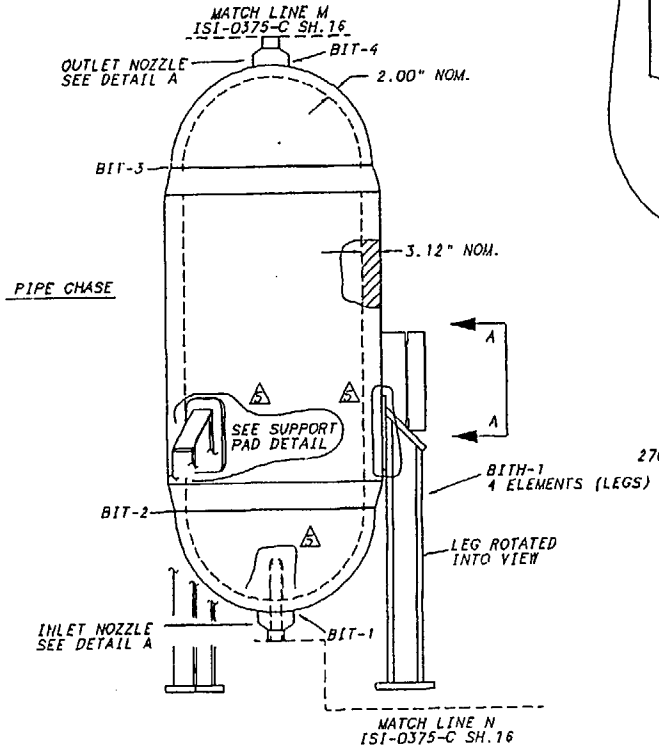

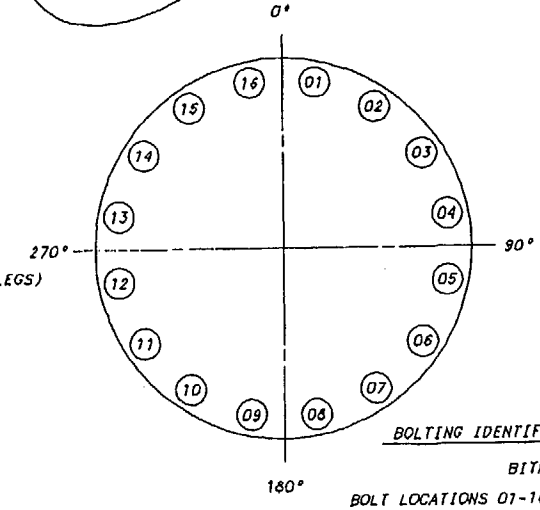

BOLTING IDENTIFIER

BITWWCB-XX

BOLT LOCATIONS 01-16

SECTION A-A

REFERENCE DRAWINGS
WESTINGHOUSE 1100E48
WBN E-2879 IC-74

MATERIAL SPECIFICATIONS

TANK
SHELL
SA-351 CF8A
3.12" NOM.
HEADS
SA240 TP 304
2.00" NOM

NOZZLES
6", SA182 F 304

BOLTING
STUDS
SA 193 GR. B7
2.50-8UN-2A X 13.50
NUTS
SA 193 GR. 2H
2.50-8UN-2B HVY.

ASME CC-2 (EQUIVALENT)

REV.	BY	CHECKED	SUBMITTED	APPROVED	DATE
5	PHB	KEC	TLH	MOD	12-11-00
ADD SUPPORT PADS, SUPPORT PAD DETAIL, AND SPARGER PER FCDT 00-04					
4	PHB	KEC	GLB	RDB	2-7-96
MADE C-SIZE, ADD SUPPORT ID, ADD SIZE TO MATERIAL SPEC					
3	PHB	PHB	GLB	FAK	3-22-95
MOVE ST WELDS -6, -7, STS-182 TO ISI-0375-C SH. 16, REVISE TITLE BLOCK					
2	RPG	PHB	KEC	GLB	6-28-93
REVISE IDENTIFIERS FOR PRISM, ADD CONTINUATIONS, & REDRAWN ON CAD					
1	KEV	JCC		GLB	1-14-83
CHANGED GLASS DESIGNATIONS AND ADD NOCM LOCATION					

TENNESSEE VALLEY AUTHORITY

WATTS BAR NUCLEAR PLANT
UNIT 1
BORON INJECTION TANK
WELD AND SUPPORT LOCATIONS

DRAWN: KEV	DATE: 2-19-82	SCALE: NOT TO SCALE	
CHECKED: DAD	APPROVED: GLB	CAD MAINTAINED DRAWING	REV
SUBMITTED:	ISI-0053-C-01		05

ENCLOSURE 5
ATTACHMENT 2

REQUEST FOR RELIEF, 1-ISI-11
ASME SECTION XI FIGURE IWC-2500-1

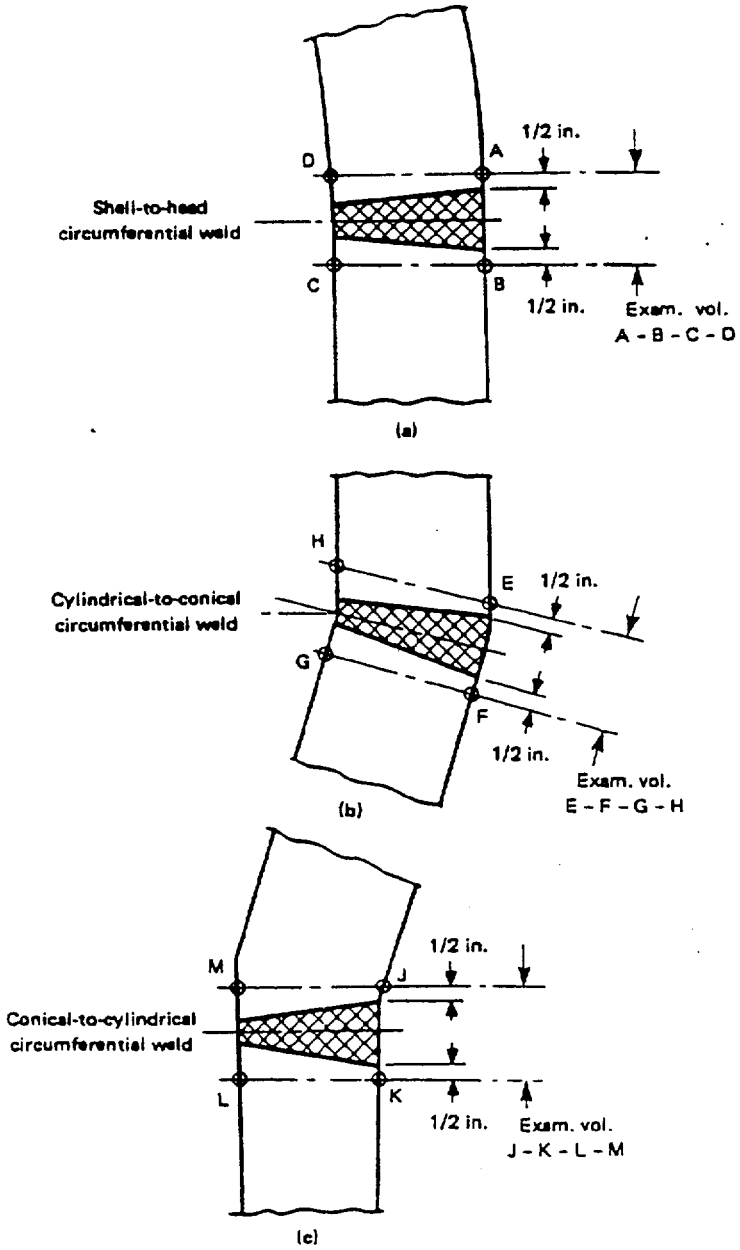

FIG. IWC-2500-1 VESSEL CIRCUMFERENTIAL WELDS

ENCLOSURE 5
ATTACHMENT 3

REQUEST FOR RELIEF, 1-ISI-11
VENDOR DRAWING 1100E48, SHEET 1

1100E48
SHT 1 OF 2

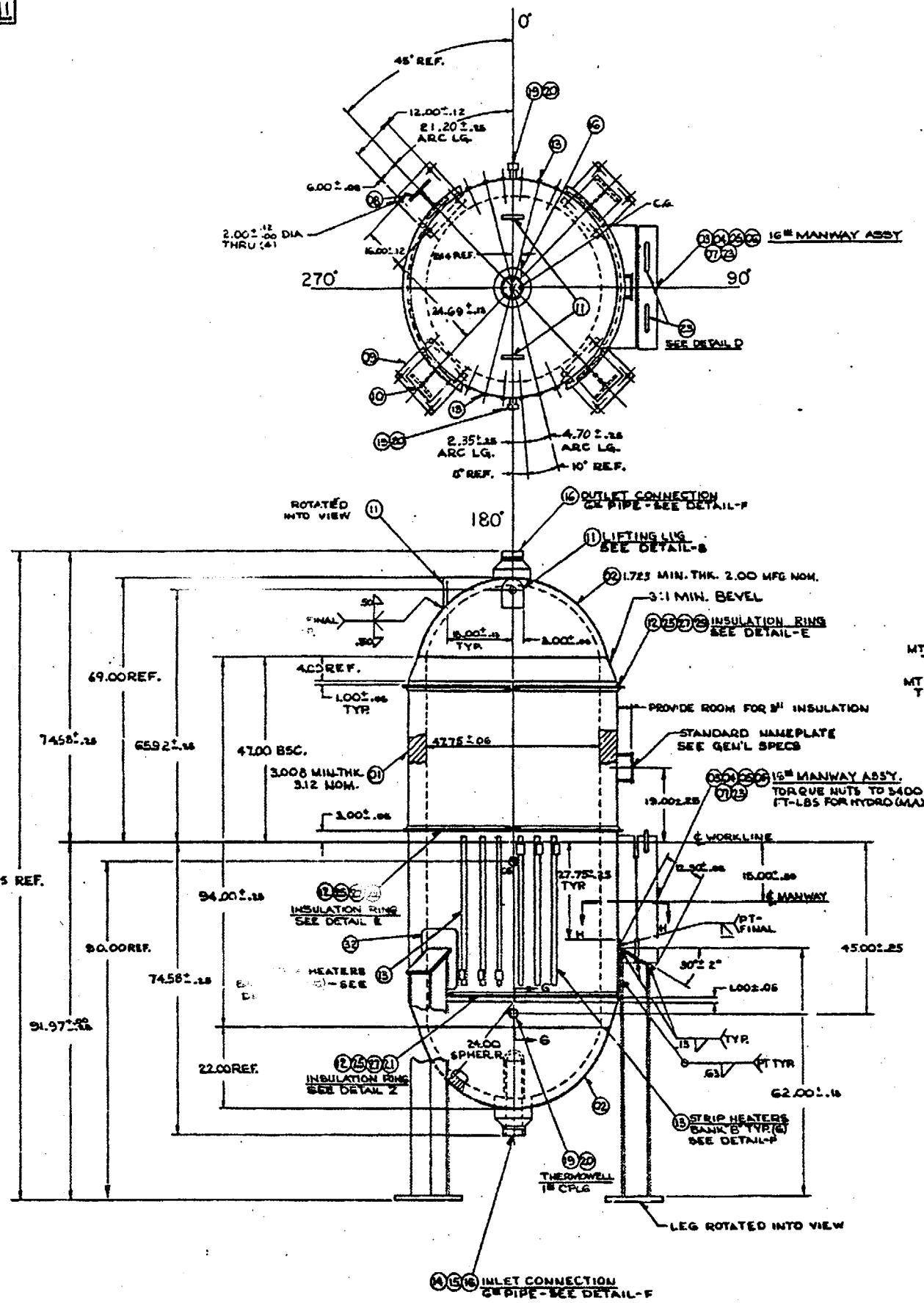

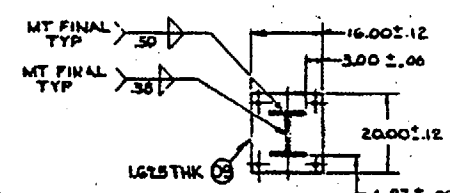

SECTION A-A

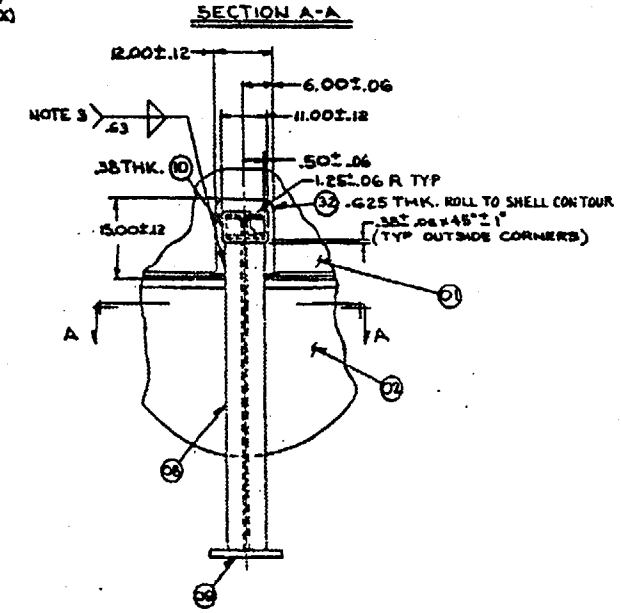

BILL OF MATERIAL

ITEM	QTY	TITLE	DRAWING & DIM. NO.	MATERIAL SPECIFICATION	Nominal Size	Schedule			
1	1	SHELL		SEE NOTE-A			1		
2	2	HEAD ASME HEMISPERICAL		SEE NOTE-A			2		
3	1	MANWAY FORGING		SEE NOTE-B			1		
4	2	16" 150# RF B.D. FLG		SA-182 F 304			1		
5	2	GASKET FOR 16" 150# RF FLG		SEE NOTE-C			1		
6	32	1.50-8UN-2A x 8.50 STUD BOLT		SA 193 GR. B7			32		
7	32	1.50-8UN-2B HVY SEMI-FIN HEX NUT		SA 194 GR. 2H			32		
8	4	W 10 x 60		SA 36 STEEL			4		
9	4	BASE PLATE		SA 36 STEEL			4		
10	4	CAP		SA 36 STEEL			4		
11	6	LIFTING LUG		SA 240 304			6		
12	4	INSULATION RING L.1.25 x 2.00 x 8		SA 36 STEEL			4		
13	12	STRIP HEATER (240 VOLT)					12		
14	1	SPARGER (6" SCH.40S)		SEE NOTE-D			1		
15	2	6" B.W. CAP (SCH.40S)		SA 403 F 304			1		
16	2	NOZZLE FORGING		SEE NOTE-B			2		
~~17~~	~~1~~	~~PIPE-SMLS (6" SCH.40S)~~		~~SEE NOTE-D~~					
~~18~~	~~1~~	~~ELBOW~~		~~SEE NOTE-D~~					
19	2	NIPPLE (1" SCH.160)		SEE NOTE-D			2		
20	2	1" 4000# S.W. CPLG.		SA 182 F 316			2		
21	8	1.250-7UNC-2A x 1.25 STUD		SA 193 GR B7			8		
22	4	INSULATION RING L.1.25 x 2.00 x .25		SA 36 STEEL			4		
23	12	LUG		304 SST			12		
24	36	.750-10UNC-2A x .750 STUD		COML 18-8			36		
25	36	.750-10UNC-2B REG HEX NUT		COML 18-8			36		
26	36	.750 x .046 THK. STD. WASHER		COML 18-8			36		
27	36	CLIP L 1.25 x 2.00 x .25		SA 36 STEEL			36		
~~28~~	~~2~~	~~PLATE-F~~		~~SA 36 STEEL~~			2		
~~29~~	~~1~~	~~SCREW~~		~~SEE NOTE-D~~					
~~30~~	~~2~~	~~SCREW~~		~~SA 36 STEEL~~					
31	2	PAD		SA 240 304			2		

A - SHELL AND HEAD MATL: SA-351 CF8A FOR SHELL AND SA-240 TYPE 304 FOR HEADS

B - FORGING MATERIAL: SA-182 F304

C - STYLE CG TYPE 304 SST AND ASBESTOS FILLER

D - SA 312 TYPE 316 SEAMLESS (OR APPROVED EQUAL)

E - ALTERNATE MATERIAL SA 285 GR. C

F - FLEXITALLIC GASKET CO., CAMDEN, N.J. (OR APPROVED EQUAL)

G - E.L. RIDGAND CO., PITTSBURGH, PA (OR APPROVED EQUAL)

H - BOLTING MATERIAL SHALL MEET IMPACT REQUIREMENTS OF NC-2300

DESIGN SPECIFICATIONS:
CODE CLASS: ASME CODE SECTION III, CLASS 2 CODE STAMP REQUIRED.
DESIGN & FABRICATION PER ASME CODE SECT. VIII, DIV. 2

DESIGN PRESSURE:

INTERNAL: 2.735 PSIG
EXTERNAL: ATMOSPHERIC

DESIGN TEMPERATURE: 200°F

NOM. INTERNAL VOLUME: 800 GAL.

WEIGHT (EST) EMPTY: 20,000 LBS
FLOODED: 27,500 LBS

HYDROSTATIC TEST: HOLD 30 MIN PER INCH OF THICKNESS OF SHELL.

SEE (X) E-SPEC 6634-E5 AND BORON INJECTION TANK EDS-AT-018 FOR ADDITIONAL DESIGN REQUIREMENTS.

NOTES:

1. ALL WELDED JOINTS OF CATEGORIES A AND B SHALL BE TYPE 1, OF TABLE UW-12. PT ROOT AND FINAL SURFACES OF WELD. HOLD RT COMPLETED JOINTS.
2. DEFINITION OF WELD INSPECTION SYMBOLS:
   RT - RADIOGRAPHIC INSPECTION
   PT - LIQUID PENETRANT EXAMINE
   MT - MAGNETIC PARTICLE EXAMINE
   ROOT - INSPECT ROOT AFTER BACKCHIP, BOTH SIDES WHERE ACCESSIBLE
   FINAL - INSPECT FINISHED SURFACE, BOTH SIDES WHERE ACCESSIBLE
3. GTAW PROCESS SHALL BE USED FOR ROOT WELD LAYER. LIQUID PENETRANT EXAMINE FINAL WELD SURFACE.
4. VISUALLY INSPECT THE ID SURFACE TO ENSURE NO WELD SPATTER IS PRESENT.
5. TVA ADDED CONDUIT SUPPORT TO WAT BORON INJECTION TANK, SEE F.-W-E-20,506 FOR DETAILS/ATTACHMENT.
6. TVA ADDED CONDUIT SUPPORT AND PIPING SUPPORT TO WBT BORON INJECTION TANK. SEE FCR W-E-20,511 FOR CONDUIT SUPPORT DETAILS/ATTACHMENT AND GEN 3883 FOR DETAILS/ATTACHMENT OF PIPING SUPPORT.

Westinghouse Non-Proprietary Class 3

TANK TOLERANCES & DIMENSIONS

UNLESS OTHERWISE SPECIFIED THE FOLLOWING INFORMATION APPLIES

TANK O.D.	TOTAL TOLERANCE
48.00 TO 8 INCLUSIVE	-.125 IN.
OVER 48.00 TO 96.00 IN	-.188 IN.
OVER 96.00 IN.	-.250 IN.

SHELL O.D. & OUT OF ROUNDNESS TOLERANCE TO BE NO MORE THAN THE LIMITS SET FORTH ON THE MAPS. ALLOW DEVIATION OF TANK SUPPORTS TO BE PARALLEL TO VERTICAL ℄ OF TANK WITHIN .250 TOTAL. ALL PLANES TO BE PARALLEL TO TANK LINE WITHIN .250 PER FOOT OF TANK HEIGHT + .50 TOTAL. PLANE ON FLANGE TO BE PARALLEL WITHIN .250 TOTAL. ALLOWANCE AT O.D. - PROPORTIONALLY ON INSIDE TO A 2" OFFSET ALLOWANCE AT BOTTOM OF SHELL - 100 IN OR 1/2 WALL ALLOWED. VARIATIONS IN FORM FROM DIMENSIONAL TOLERANCE ARE PERMITTED IN THIS STAMPED PRESSURE STANDARD. - EXPANDED INSIDE SHELL OF TANK SHALL BE MADE TO A MANNER PRESCRIBED IN THE LATEST EDITION OF ASME CODE SECT. VIII. IMPACT TOLERANCES ON WELDED SHELL AND HEAD. BORON BARGAIN FOR ASME SECT. VIII - FOR VARIANCE FOR ASME SECT. VIII.

Westinghouse Non-Proprietary Class 3

1	11/07/83	1334/WM3338	CHANGE
2	11/18/83	1334/WM3338	REDESIGNED REDRAWN
3	11/18/83	ECN-21147	WAT/WBT-318
4	11/18/83	ECN-21147	WAT/WBT-318
5	11/18/83	ECN-21147	WAT/WBT-318
6	11/18/83	ECN-21147	WAT/WBT-318
7	11/18/83	ECN-21147	WAT/WBT-318

Westinghouse Electric Corporation
NUCLEAR ENERGY SYSTEMS, PITTSBURGH, PA., U.S.A.

TANK - 800 GAL. BORON INJECTION

SPIN-STATEL

1100E48

SHEET 1 OF 2

DO NOT SCALE

ENCLOSURE 5
ATTACHMENT 4

REQUEST FOR RELIEF, 1-ISI-11
EXAMINATION DATA REPORTS

TENNESSEE VALLEY AUTHORITY	EXAMINATION SUMMARY AND RESOLUTION SHEET	REPORT NUMBER: R-0690

PROJECT: WBN UNIT: 01 CYCLE 03A				COMPONENT ID: BIT-2	
EXAMINATION METHOD				SYSTEM: SIS	ISI DWG NO: ISI-0053-C-01
MT ☐	PT ☐	UT ☑	VT ☐	CONFIGURATION	CATEGORY
PROCEDURE: N-UT-77		REV 0	TC: N/A	VHEAD TO VHEAD	C-A

EXAMINER:	EXAMINER:	EXAMINER:	EXAMINER:
D. Gronewold	J. G. Abbott	N/A	N/A
LEVEL: II	LEVEL: II	LEVEL:	LEVEL:

An Ultrasonic examination was performed on weld # BIT-2, a stainless steel bottom head to Vessel weld on the Boron injection tank.

A 45 Deg. shearwave and a 60 Deg.RL with a 1/2V calibration were used for this examination. Also a 0 Deg. lamination scan was performed.

No indications were detected.

60% bidirectional code coverage was achieved by scanning over the weld.

RESOLUTION BY	REVIEWED BY	ANII: B. Earnigh
D. Gronewold	[signature]	DATE: 9/23/00
LEVEL II DATE: 9-9-00	LEVEL: III DATE: 9-20-00	Page: 1 OF 7

TENNESSEE VALLEY AUTHORITY	DIGITAL ULTRASONIC CALIBRATION DATA SHEET	REPORT NUMBER: R-0690

ECT: WBNP UNIT: 1 CYCLE: 3	CALIBRATION DATE: 9-9-00
EDURE: N-UT-77 REV: 0 TC: N/A	CALIBRATION BLOCK NO.: WB-44 TEMP: 72 °F
INSTRUMENT: KB DUE DATE: 6-22-01	SIMULATOR BLOCK NO: 790391
MODEL/TYPE: USN-50 SERIAL NO.: E24253	THERMOMTER S/N: 562781 DUE DATE: 6-6-01
TRANSDUCER MANUF: KBA	COUPLANT ULTRAGEL BATCH: 00125
S/N 01637 SIZE: 3.5x10 FREQ: 4 MHz	EXAM TYPE: SHEAR ☐ LONG ☒ RL ☐
CABLE TYPE: RG-174 LENGTH: 72 inches	**ANGLE VERIFICATION**
	BLOCK TYPE: ROMPAS S/N: 790391
DAC	NOMINAL ANGLE: ⊖ ACTUAL ANGLE: ⊖

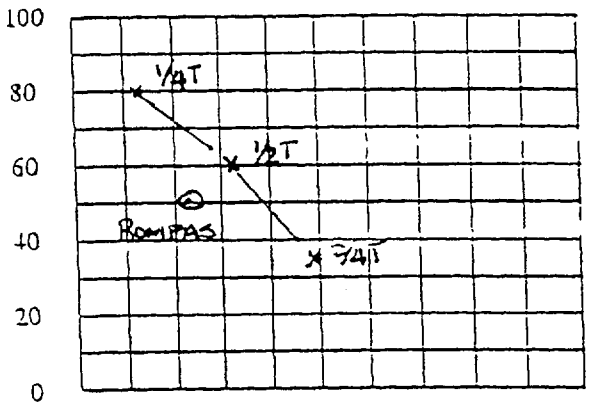

DISPLAY WIDTH: 3.0 inches

INSTRUMENT SETTINGS

REFLECTOR SCAN DIRECT.	NTCH	SDH	REFERENCE SENSITIVITY	MEMORY NUMBER
AXIAL 0°	☐	☒	52 dB	1
CIRC	☐	☐	N/A dB	N/A

FREQ: BB MHz	REJECT: ⊖ %
ANGLE: OFF deg	DAMPING: FIXED ohms
DELAY: 9.102 msec	PULSER: HIGH *
ZERO: 8.882 msec	FILTER: FIXED *
VELOCITY: .2266 msec	REP RATE: HIGH
RANGE: 3.0 inches	TOF: ☒ PEAK ☐ FLANK
RECTIFIER: FIXED	POWER: BATT
DUAL: ☒ ON ☐ OFF	TCG: ☐ ON ☒ OFF

REFLECTOR: ROMPAS SDH GAIN: 52 dB	**CALIBRATION TIMES**
AMPLITUDE: 50 % METAL PATH: .737 "	INITIAL TIME: 0800 FINAL TIME: 0900

VERIFICATION TIMES	1) 0810	2) N/A	3) N/A	4) N/A	5) N/A	6) N/A	7) N/A	8) N/A	9) N/A

*** PDI QUALIFIED INSTRUMENT SETTINGS:**

VERIFY INSTRUMENT SETTINGS AND CALIBRATION SEQUENCE ARE IN ACCORDANCE WITH TABLE 2 OF THE APPLICABLE PDI QUALIFICATION IMPLEMENTATION PROCEDURE !

LINEARITY CHECK

VERTICAL	SIGNAL 1	100	90	80	70	60	50	40	30	20	
	SIGNAL 2	50	45	40	35	30	25	20	15	10	
ATTENUATOR	GAIN	SET	-6 dB		-12 dB		SET	+12	SET	+6	
	AMP	80%	32 TO 48		16 TO 24		20 %	64 TO 96	40%	64 TO 96	
			40		20			80		80	

COMMENTS: None	WELDS/ITEMS EXAMINED: BIT-2

EXAMINER:	EXAMINER:	REVIEWER:	ANII: B. Earnight
LEVEL: II	LEVEL: II	LEVEL: III 9-20-00	DATE: 9/23/00

TENNESSEE VALLEY AUTHORITY	DIGITAL ULTRASONIC CALIBRATION DATA SHEET	REPORT NUMBER: R-0690

PROJECT: WBNP UNIT: 1 CYCLE: 3 | CALIBRATION DATE: 9-9-00

PROCEDURE: N-UT-77 REV: 0 TC: N/A | CALIBRATION BLOCK NO.: WB-44 TEMP: 72 °F

INSTRUMENT: KB DUE DATE: 6-22-01 | SIMULATOR BLOCK NO: 790391

MODEL/TYPE: USN-50 SERIAL NO.: E242S3 | THERMOMTER S/N: 562731 DUE DATE: 6-6-01

TRANSDUCER MANUF: KBA | COUPLANT ULTRAGEL II BATCH: 00125

S/N 00D4HM SIZE: .50" FREQ: 1.5 MHz | EXAM TYPE: SHEAR ☒ LONG ☐ RL ☐

CABLE TYPE: RG-174 LENGTH: 72 inches

ANGLE VERIFICATION

BLOCK TYPE: ROMPAS S/N: 790391

NOMINAL ANGLE: 45 ACTUAL ANGLE: 45

DAC

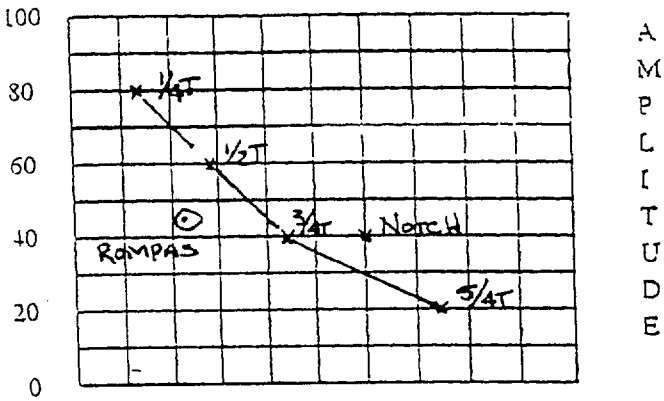

DISPLAY WIDTH: 4.687 inches

REFLECTOR: ROMPAS SDH GAIN: 22.0 dB

AMPLITUDE: 45 % METAL PATH: 1.05 "

INSTRUMENT SETTINGS

REFLECTOR SCAN DIRECT.	NTCH	SDH	REFERENCE SENSITIVITY	MEMORY NUMBER
AXIAL	☒	☒	22 dB	2
CIRC	☐	☐	SAME (FLAT BLOCK) dB	

FREQ:	5B MHz	REJECT:	0 %
ANGLE:	45 deg	DAMPING:	FIXED ohms
DELAY:	7.672 msec	PULSER:	HIGH *
ZERO:	7.885 msec	FILTER:	FIXED *
VELOCITY:	.1227 msec	REP RATE:	HIGH
RANGE:	4.687 inches	TOF:	☒ PEAK ☐ FLANK
RECTIFIER:	FIXED	POWER:	BATT
DUAL:	☐ ON ☒ OFF	TCG:	☐ ON ☒ OFF

CALIBRATION TIMES

INITIAL TIME: 0802 FINAL TIME: 0901

VERIFICATION TIMES	1) 0822	2) N/A	3) N/A	4) N/A	5) N/A	6) N/A	7) N/A	8) N/A	9) N/A

*** PDI QUALIFIED INSTRUMENT SETTINGS:**

VERIFY INSTRUMENT SETTINGS AND CALIBRATION SEQUENCE ARE IN ACCORDANCE WITH TABLE 2 OF THE APPLICABLE PDI QUALIFICATION IMPLEMENTATION PROCEDURE !

LINEARITY CHECK

VERTICAL	SIGNAL 1	100	90	80	70	60	50	40	30	20	
	SIGNAL 2	50	45	40	35	30	25	20	15	10	

ATTENUATOR	GAIN	SET	-6 dB	-12 dB	SET	+12	SET	+6
	AMP	80%	32 TO 48	16 TO 24	20 %	64 TO 96	40%	64 TO 96
			40	20		80		80

COMMENTS:

WELDS/ITEMS EXAMINED:

BIT-2

EXAMINER:	EXAMINER:	REVIEWER:	ANII:
Douglas Honeycutt	Jeb G. Cobb	W W Bentley	B. Earnigh
L: II	LEVEL: II	LEVEL: III DATE: 9-20-00	DATE: 9/23/00
			PG.: 3 OF 7

TENNESSEE VALLEY AUTHORITY	DIGITAL ULTRASONIC CALIBRATION DATA SHEET	REPORT NUMBER: R-0690

PROJECT: WBNP UNIT: 1 CYCLE: 3 | CALIBRATION DATE: 9-9-00

PROCEDURE: N-UT-77 REV: 0 TC: N/A | CALIBRATION BLOCK NO.: WB-44 TEMP: 72 °F

INSTRUMENT: KB DUE DATE: 6-22-01 | SIMULATOR BLOCK NO: 790391

MODEL/TYPE: USN-50 SERIAL NO.: E24253 | THERMOMTER S/N: 562781 DUE DATE: 6-6-01

TRANSDUCER MANUF: SIGMA | COUPLANT ULTRAGEL II BATCH: 00125

S/N 223A-94005 SIZE: 2(18x10) FREQ: 2 MHz | EXAM TYPE: SHEAR ☐ LONG ☐ RL ☒

CABLE TYPE: RG-174 LENGTH: 72 inches

ANGLE VERIFICATION

BLOCK TYPE: ROMPAS S/N: 790391

NOMINAL ANGLE: 60 ACTUAL ANGLE: 60

DAC

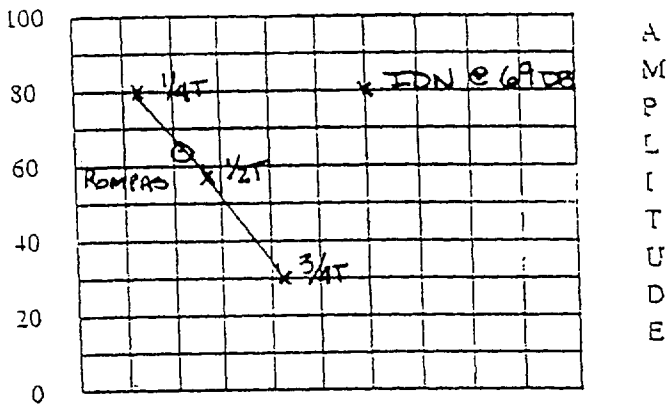

DISPLAY WIDTH: 6.61 inches

REFLECTOR: Rompas SDH GAIN: 47 dB

AMPLITUDE: 65 % METAL PATH: 1.45 "

INSTRUMENT SETTINGS

REFLECTOR			REFERENCE	MEMORY
SCAN DIRECT.	NTCH	SDH	SENSITIVITY	NUMBER
AXIAL	☐	☒	47 dB	3
CIRC	☐	☐	SAME dB	(FLAT BLOCK)

FREQ:	BB MHz	REJECT.	0 %
ANGLE:	60 deg	DAMPING:	FIXED ohms
DELAY:	8.859 msec	PULSER:	HIGH *
ZERO:	8.873 msec	FILTER:	FIXED *
VELOCITY:	.2295 msec	REP RATE:	HIGH
RANGE:	6.61 inches	TOF:	☒ PEAK ☐ FLANK
RECTIFIER:	FIXED	POWER:	BATT
DUAL:	☒ ON ☐ OFF	TCG:	☐ ON ☒ OFF

CALIBRATION TIMES

INITIAL TIME: 0805 FINAL TIME: 0902

VERIFICATION TIMES	1) 0840	2) N/A	3) N/A	4) N/A	5) N/A	6) N/A	7) N/A	8) N/A	9) N/A

* PDI QUALIFIED INSTRUMENT SETTINGS:

VERIFY INSTRUMENT SETTINGS AND CALIBRATION SEQUENCE ARE IN ACCORDANCE WITH TABLE 2 OF THE APPLICABLE PDI QUALIFICATION IMPLEMENTATION PROCEDURE !

LINEARITY CHECK

VERTICAL	SIGNAL 1	100	90	80	70	60	50	40	30	20
	SIGNAL 2	50	45	40	35	30	25	20	15	10

ATTENUATOR	GAIN	SET	-6 dB	-12 dB	SET	+12	SET	+6
	AMP	80%	32 TO 48	16 TO 24	20 %	64 TO 96	40%	64 TO 96
			40	20		80		80

COMMENTS: NOTCH CAN NOT BE SEEN @ 47 DB, SET @ 80% @ 69 DB.

WELDS/ITEMS EXAMINED: BIT-2

EXAMINER:	EXAMINER:	REVIEWER:	ANII: B. Earnigh
Douglas Greenwell	[signature]	[signature]	DATE: 9/23/00
L: II	LEVEL: II	LEVEL: II DATE: 9-20-00	PG.: 4 OF 7

TENNESSEE VALLEY AUTHORITY	ULTRASONIC PIPING EXAMINATION DATA SHEET	REPORT NUMBER: R-0690

PROJECT: WBN UNIT: 1 CYCLE: 3 | EXAMINATION DATE: 9-9-00

PROCEDURE: N-UT-77 REV: 0 TC: N/A | START TIME: 0810 END TIME: 0902

SYSTEM: SIS | EXAM SURFACE ☐ ID ☑ OD

COMPONENT ID: BIT-2 | MATL. TYPE: ☐ CS ☑ SS ☐ CSCL ☑ CCSS

CONFIGURATION: HEAD TO SHELL, FLOW →

SURFACE TEMP.: 84 °F PYRO. NO.: 562781

CAL DUE DATE: 6-6-01

Wo REFERENCE: WELD ℄

Lo REFERENCE: MANWAY ℄

EXAM ANGLE	0°/45° DEG	60° DEG
CIRC. SCAN SENSITIVITY	64/28 dB	dB
AXIAL SCAN SENSITIVITY	64/28 dB	59 dB

IND. NO.	L (in) FROM REF. L1	L MAX	L2	AT MAX AMP W MAX	MP MAX	D MAX	MAX AMP %DAC	EXAM NO. 3-14	NOM. ANG.	N R I	IND. INFO: TYPE, DAMPING, ETC.
							%	1-2	0°	✓	
							%	1	45°	✓	
							%	3	45°	✓	
							%	4	45°	✓	
							%	1	60° RL	✓	
							%	3	60° RL	✓	
							%	4	60° RL	✓	
							%				
							%				
							%				
							%				
							%				
							%				
							%				

REMARKS / LIMITATIONS: SINGLE SIDE EXAM DUE TO THE VESSEL SHELL BEING CCSS.

EXAMINER: Douglas Greenewald LEVEL: II ANII: B. Eamigh

EXAMINER: [signature] LEVEL: II DATE: 9/23/00

REVIEWER: [signature] LEVEL: III DATE: 9-20-00

TVA	WALL THICKNESS PROFILE SHEET	REPORT NO: R-0690

PROJECT: WBNP
UNIT: 1
WELD NO: BIT-2
SYSTEM: SIS

Record Thickness Measurements As Indicated, Including Weld Width, Edge-To-Edge At 0°

Position	0°	90°	180°	270°
1	2.10			
2	1.93			
3	N/A		N/A	
4	N/A			
5	N/A			

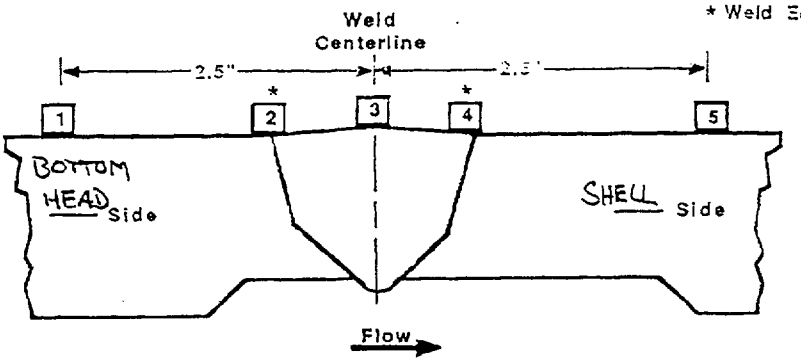

CROWN HEIGHT: .10" - .15"
DIAMETER: 53" DIA.
CROWN WIDTH: 2.8"
WELD LENGTH: 164.5"

NO THICKNESS READINGS ACHIEVED ON WELD OR SHELL.

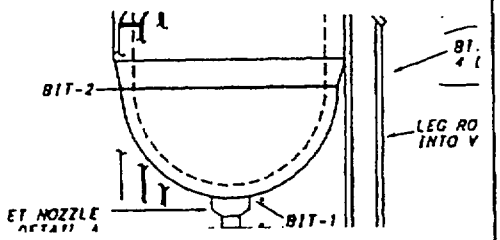

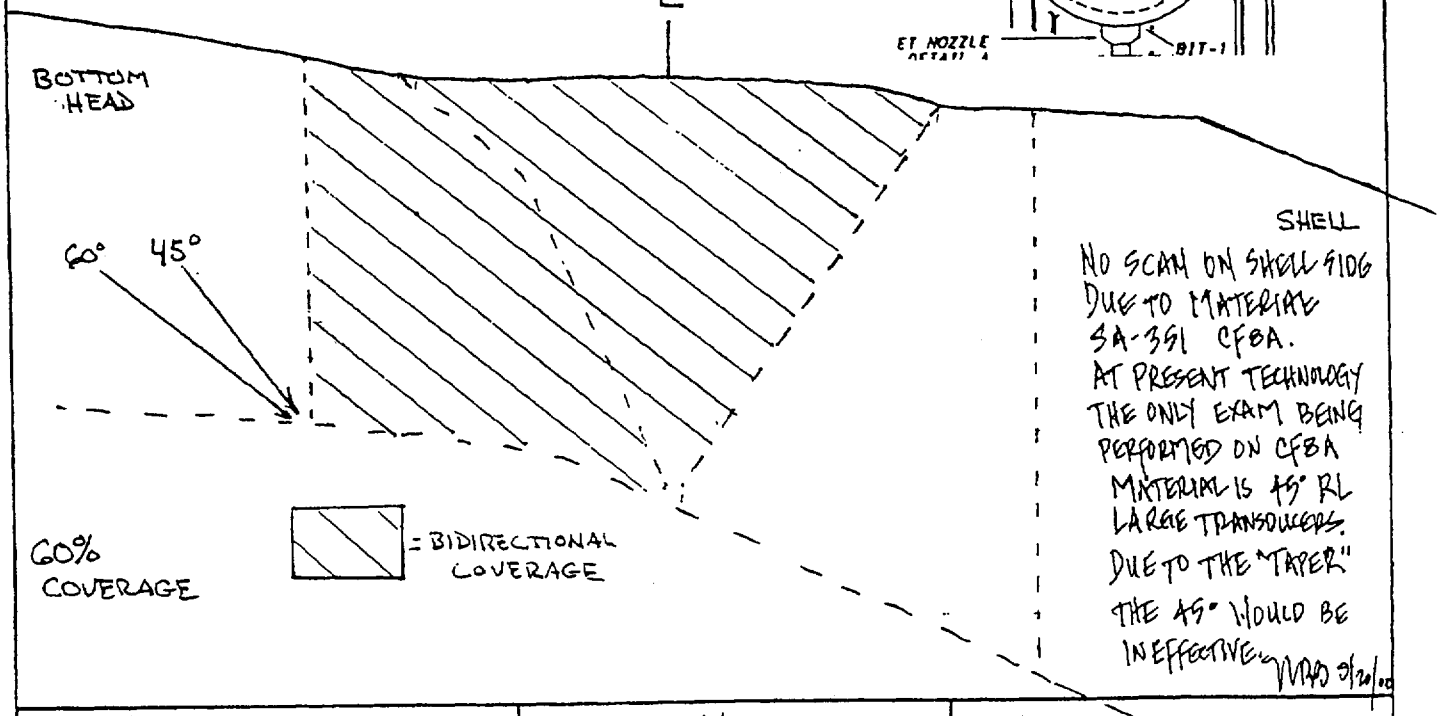

NO SCAN ON SHELL SIDE DUE TO MATERIAL SA-351 CF8A. AT PRESENT TECHNOLOGY THE ONLY EXAM BEING PERFORMED ON CF8A MATERIAL IS 45° RL LARGE TRANSDUCERS. DUE TO THE "TAPER" THE 45° WOULD BE INEFFECTIVE. MRD 9/20/00

EXAMINER: Deb Greenwald
LEVEL: II
DATE: 9-9-00

REVIEWED BY: M M Bentley
LEVEL: III
DATE: 9-20-00

ANII: B. Earnigh
DATE: 9/23/00

PAGE 6 OF 7

TVA 19668 (NP-5-89)

1-108-999-44

TVA Office of Nuclear Power	PROJECT: WBNP SYSTEM: SIS Unit: 1 C3 WELD NO.: BIT-2	REPORT NO.: R-0690

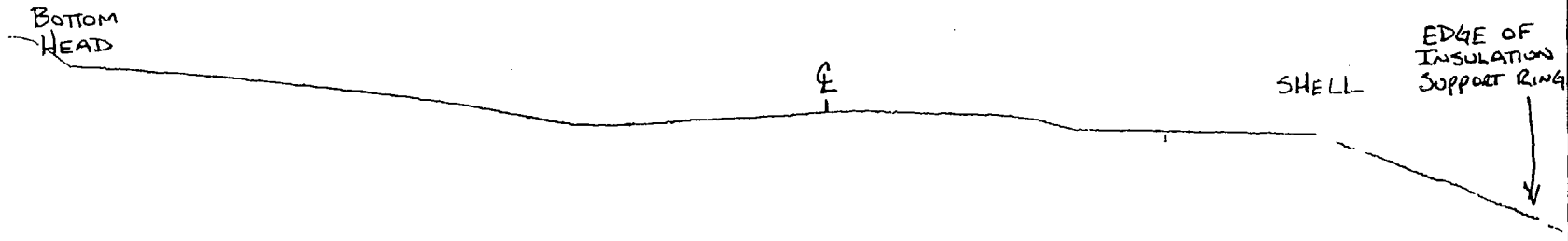

BY: Douglas Greenwald LEVEL: II DATE: 9-9-00 PAGE 7 OF 7

TVA 19669 (ONP-6-88)

TENNESSEE VALLEY AUTHORITY	EXAMINATION SUMMARY AND RESOLUTION SHEET	REPORT NUMBER: R-0691

PROJECT: WBN UNIT: 01 CYCLE 03A				COMPONENT ID: BIT-3	
EXAMINATION METHOD				SYSTEM: SIS	ISI DWG NO: ISI-0053-C-01
MT ☐	PT ☐	UT ☑	VT ☐	CONFIGURATION	CATEGORY
PROCEDURE: N-UT-77		REV 0	TC: N/A	VSHELL TO VSHELL	C-A

EXAMINER:	EXAMINER:	EXAMINER:	EXAMINER:
D. Gronewold	J. G. Abbott	N/A	N/A
LEVEL: II	LEVEL: II	LEVEL:	LEVEL:

An Ultrasonic examination was performed on weld # BIT-3, a stainless steel top head to Vessel weld on the Boron injection tank.

A 45 Deg. shearwave and a 60 Deg.RL with a 1/2V calibration were used for this examination. Also a 0 Deg. lamination scan was performed.

No indications were detected.

63% bidirectional code coverage was achieved by scanning over the weld.

RESOLUTION BY	REVIEWED BY	ANII: B. Eamigh
D. Gronewold	[signature]	DATE: 9/23/00
LEVEL II DATE: 9-8-00	LEVEL: III DATE: 9-20-00	Page: 1 OF 7

TENNESSEE VALLEY AUTHORITY	DIGITAL ULTRASONIC CALIBRATION DATA SHEET	REPORT NUMBER: R-0691

PROJECT: WBNP UNIT: 1 CYCLE: 3 CALIBRATION DATE: 9-8-00

PROCEDURE: N-UT-77 REV: 0 TC: N/A CALIBRATION BLOCK NO.: WB-44 TEMP: 72 °F

INSTRUMENT: KB DUE DATE: 6-22-01 SIMULATOR BLOCK NO: 790391

MODEL/TYPE: USN-50 SERIAL NO.: E24253 THERMOMTER S/N: 562781 DUE DATE: 6-6-01

TRANSDUCER MANUF: KBA MSEB COUPLANT ULTRAGEL II BATCH: 00125

S/N 01637 SIZE: 3.5x10 FREQ: 4 MHz EXAM TYPE: SHEAR ☐ LONG ☒ RL ☐

CABLE TYPE: RG-174 LENGTH: 72 inches

ANGLE VERIFICATION

BLOCK TYPE: ROMPAS S/N: 790391

NOMINAL ANGLE: ⊖ ACTUAL ANGLE: ⊖

DAC

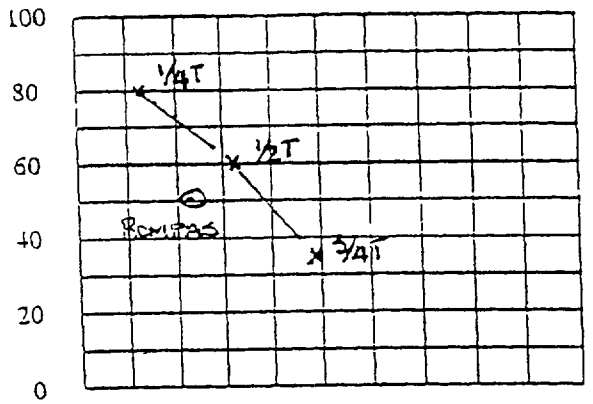

DISPLAY WIDTH: 3.0 inches

INSTRUMENT SETTINGS

REFLECTOR			REFERENCE SENSITIVITY	MEMORY NUMBER
SCAN DIRECT.	NTCH	SDH		
AXIAL 0°	☐	☒	52 dB	1
CIRC	☐	☐	N/A dB	N/A

FREQ:	BB MHz	REJECT:	⊖ %
ANGLE:	OFF deg	DAMPING:	FIXED ohms
DELAY:	9.102 msec	PULSER:	HIGH *
ZERO:	8.882 msec	FILTER:	FIXED *
VELOCITY:	.2266 msec	REP RATE:	HIGH
RANGE:	3.0 inches	TOF:	☒ PEAK ☐ FLANK
RECTIFIER:	FIXED	POWER:	BATT
DUAL:	☒ ON ☐ OFF	TCG:	☐ ON ☒ OFF

REFLECTOR: ROMPAS SDH GAIN: 52 dB

AMPLITUDE: 50 % METAL PATH: .737 "

CALIBRATION TIMES

INITIAL TIME: 1210 FINAL TIME: 1405

VERIFICATION TIMES 1) 1220 2) 1305 3) N/A ~~4)~~ ~~5)~~ ~~6)~~ ~~7)~~ ~~8)~~ ~~9)~~

* PDI QUALIFIED INSTRUMENT SETTINGS:

VERIFY INSTRUMENT SETTINGS AND CALIBRATION SEQUENCE ARE IN ACCORDANCE WITH TABLE 2 OF THE APPLICABLE PDI QUALIFICATION IMPLEMENTATION PROCEDURE !

LINEARITY CHECK

VERTICAL	SIGNAL 1	100	90	80	70	60	50	40	30	20	
	SIGNAL 2	50	45	40	35	30	25	20	15	10	
ATTENUATOR	GAIN	SET	-6 dB		-12 dB		SET	+12		SET	+6
	AMP	80%	32 TO 48		16 TO 24		20 %	64 TO 96		40%	64 TO 96
			40		20			80			80

COMMENTS:

WELDS/ITEMS EXAMINED: BIT-3

EXAMINER:	EXAMINER:	REVIEWER:	ANII: B. Eamich
Douglas Gronewold	Jack G. Allen	W M Bentley	DATE: 9/23/00
LEVEL: II	LEVEL: II	LEVEL: III DATE: 9-20-00	PG.: 2 OF 7

TENNESSEE VALLEY AUTHORITY	DIGITAL ULTRASONIC CALIBRATION DATA SHEET	REPORT NUMBER: R-0691

PROJECT: WBNP UNIT: 1 CYCLE: 3 | CALIBRATION DATE: 9-8-00

PROCEDURE: N-UT-77 REV: 0 TC: N/A | CALIBRATION BLOCK NO.: WB-44 TEMP: 72 °F

INSTRUMENT: KB DUE DATE: 6-22-01 | SIMULATOR BLOCK NO: 790391

MODEL/TYPE: USN-50 SERIAL NO.: E24253 | THERMOMTER S/N: 562781 DUE DATE: 6-6-01

TRANSDUCER MANUF: KBA | COUPLANT ULTRAGEL II BATCH: 00125

S/N 00D4HM SIZE: .50" FREQ: 1.5 MHz | EXAM TYPE: SHEAR ☒ LONG ☐ RL ☐

CABLE TYPE: RG-174 LENGTH: 72 inches

ANGLE VERIFICATION

BLOCK TYPE: ROMPAS S/N: 790391

NOMINAL ANGLE: 45 ACTUAL ANGLE: 45

DAC

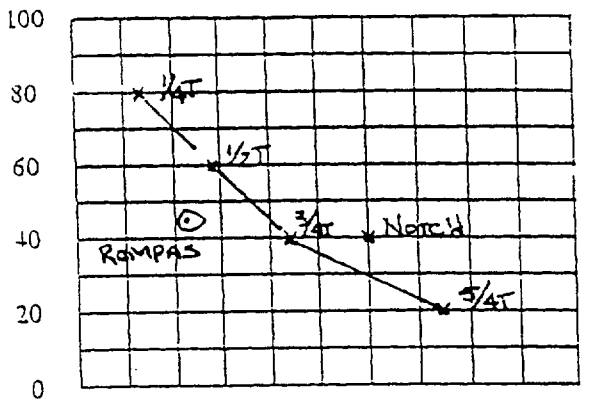

DISPLAY WIDTH: 4.687 inches

REFLECTOR: ROMPAS SDH GAIN: 22.0 dB

AMPLITUDE: 45 % METAL PATH: 1.05 "

INSTRUMENT SETTINGS

REFLECTOR SCAN DIRECT.	NTCH	SDH	REFERENCE SENSITIVITY	MEMORY NUMBER
AXIAL	☒	☒	22 dB	2
CIRC	☐	☐	SAME (FLAT BLOCK) dB	

FREQ:	BB MHz	REJECT:	0 %
ANGLE:	45 deg	DAMPING:	FIXED ohms
DELAY:	7.672 msec	PULSER:	HIGH *
ZERO:	7.885 msec	FILTER:	FIXED *
VELOCITY:	.1227 msec	REP RATE:	HIGH
RANGE:	4.687 inches	TOF:	☒ PEAK ☐ FLANK
RECTIFIER:	FIXED	POWER:	BATT
DUAL:	☐ ON ☒ OFF	TCG:	☐ ON ☒ OFF

CALIBRATION TIMES

INITIAL TIME: 1210 FINAL TIME: 1405

VERIFICATION TIMES | 1) 1230 | 2) 1315 | 3) N/A | ~~4)~~ | ~~5)~~ | ~~6)~~ | ~~7)~~ | ~~8)~~ | ~~9)~~

* PDI QUALIFIED INSTRUMENT SETTINGS:

VERIFY INSTRUMENT SETTINGS AND CALIBRATION SEQUENCE ARE IN ACCORDANCE WITH TABLE 2 OF THE APPLICABLE PDI QUALIFICATION IMPLEMENTATION PROCEDURE !

LINEARITY CHECK

VERTICAL	SIGNAL 1	100	90	80	70	60	50	40	30	20	
	SIGNAL 2	50	45	40	35	30	25	20	15	10	
ATTENUATOR	GAIN	SET	-6 dB	-12 dB	SET	+12	SET	+6			
	AMP	80%	32 TO 48	16 TO 24	20 %	64 TO 96	40%	64 TO 96			
			40	20		80		80			

COMMENTS:

WELDS/ITEMS EXAMINED:

BIT-3

EXAMINER:	EXAMINER:	REVIEWER:	ANII:
Douglas Greenewald	J. G. Cato	W. M. Bentley	B. Earnigh
L: II	LEVEL: II	LEVEL: III DATE: 9-20-00	DATE: 9/23/00

PG.: 3 OF 7

TENNESSEE VALLEY AUTHORITY	DIGITAL ULTRASONIC CALIBRATION DATA SHEET	REPORT NUMBER: R-0691

PROJECT: WBNP UNIT: 1 CYCLE: 3 | CALIBRATION DATE: 9-8-00

CEDURE: N-UT-77 REV: 0 TC: N/A | CALIBRATION BLOCK NO.: WB-44 TEMP: 72 °F

RUMENT: KB DUE DATE: 6-22-01 | SIMULATOR BLOCK NO: 790391

MODEL/TYPE: USN-50 SERIAL NO.: E24253 | THERMOMTER S/N: 562781 DUE DATE: 6-6-01

TRANSDUCER MANUF: SIGMA | COUPLANT ULTRAGEL-II BATCH: 00125

S/N 223A-94005 SIZE: 2(18x10) FREQ: 2 MHz | EXAM TYPE: SHEAR ☐ LONG ☐ RL ☒

CABLE TYPE: RG-174 LENGTH: 72 inches | ANGLE VERIFICATION

BLOCK TYPE: ROMPAS S/N: 790391

NOMINAL ANGLE: 60 ACTUAL ANGLE: 60

DAC

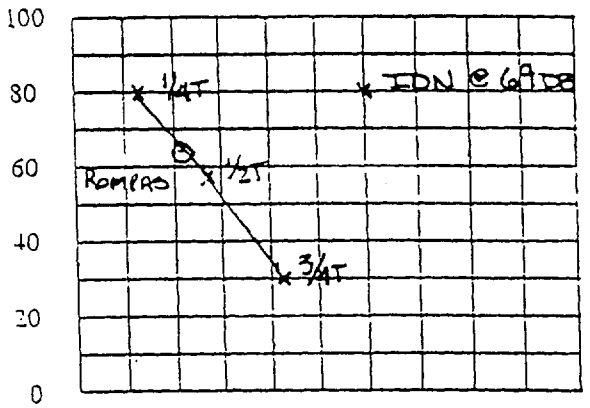

DISPLAY WIDTH: 6.61 inches

REFLECTOR: ROMPAS SDH GAIN: 47 dB

AMPLITUDE: 65 % METAL PATH: 1.45 "

VERIFICATION TIMES | 1) 1250 | 2) 1335 | 3) N/A | 4) | 5) | 6) | 7) | 8) | 9)

INSTRUMENT SETTINGS

REFLECTOR SCAN DIRECT.	NTCH	SDH	REFERENCE SENSITIVITY	MEMORY NUMBER
AXIAL	☐	☒	47 dB	3
CIRC	☐	☐	SAME dB (FLAT BLOCK)	

FREQ:	88 MHz	REJECT:	0 %
ANGLE:	60 deg	DAMPING:	FIXED ohms
DELAY:	8.859 msec	PULSER:	HIGH "
ZERO:	8.873 msec	FILTER:	FIXED "
VELOCITY:	.2295 msec	REP RATE:	HIGH
RANGE:	6.61 inches	TOF:	☒ PEAK ☐ FLANK
RECTIFIER:	FIXED	POWER:	BATT
DUAL:	☒ ON ☐ OFF	TCG:	☐ ON ☒ OFF

CALIBRATION TIMES

INITIAL TIME: 1214 FINAL TIME: 1407

* PDI QUALIFIED INSTRUMENT SETTINGS:

VERIFY INSTRUMENT SETTINGS AND CALIBRATION SEQUENCE ARE IN ACCORDANCE WITH TABLE 2 OF THE APPLICABLE PDI QUALIFICATION IMPLEMENTATION PROCEDURE !

LINEARITY CHECK

VERTICAL	SIGNAL 1	100	90	80	70	60	50	40	30	20	
	SIGNAL 2	50	45	40	35	30	25	20	15	10	

ATTENUATOR	GAIN	SET	-6 dB	-12 dB	SET	+12	SET	+6	
	AMP	80%	32 TO 48	16 TO 24	20 %	64 TO 96	40%	64 TO 96	
			40	20		80		80	

COMMENTS: NOTCH CAN NOT BE SEEN @ 47 DB, SET @ 80% @ 69 DB.

WELDS/ITEMS EXAMINED: BIT-3

EXAMINER:	EXAMINER:	REVIEWER:	ANII:
Douglas Greenwald	John G. Cell	W W Bentley	B. Ermigh
L: II	LEVEL: II	LEVEL: III DATE: 9.20.00	DATE: 9/23/00

PG.: 4 OF 7

TENNESSEE VALLEY AUTHORITY	ULTRASONIC PIPING EXAMINATION DATA SHEET	REPORT NUMBER: R-0691

ROJECT: WBN UNIT: 1 CYCLE: 3 EXAMINATION DATE: 9-8-00

PROCEDURE: N-UT-77 REV: 0 TC: N/A START TIME: 1305 END TIME: 1400

SYSTEM: SIS EXAM SURFACE ☐ ID ☑ OD

COMPONENT ID: BIT-3 MATL. TYPE: ☐ CS ☑ SS ☐ CSCL ☑ CCSS

C ONFIGURATION

SHELL TO HEAD

FLOW →

SURFACE TEMP.: 84 °F PYRO. NO.: 562781

CAL DUE DATE: 6-6-01

EXAM ANGLE	0°/45° DEG	60° DEG
CIRC. SCAN SENSITIVITY	64/28 dB	dB
AXIAL SCAN SENSITIVITY	64/28 dB	59 dB

Wo REFERENCE:

Lo REFERENCE:

IND. NO.	L (in) FROM REF. L1	L MAX	L2	AT MAX AMP W MAX	MP MAX	D MAX	MAX AMP %DAC	EXAM NO. 3-14	NOM. ANG.	N R I	IND. INFO: TYPE. DAMPING. ETC.
							%	1-2	0°	✓	
							%	2	45°	✓	
							%	3	45°	✓	
							%	4	45°	✓	
							%	2	60°RL	✓	
							%	3	60°RL	✓	
							%	4	60°RL	✓	
							%				
							%				
							%				
							%				
							%				
							%				
							%				

REMARKS / LIMITATIONS: SINGLE SIDE EXAM DUE TO THE VESSEL SHELL BEING CCSS.

EXAMINER: Douglas Greenwald LEVEL: II ANII: B. Earnigh

EXAMINER: [illegible] LEVEL: II DATE: 9/23/00

REVIEWER: [illegible] LEVEL: III DATE: 9-20-00 PAGE 5 OF 7

TVA	WALL THICKNESS PROFILE SHEET	REPORT NO: R-0691

PROJECT: WBNP
UNIT: 1
WELD NO: BIT-3
SYSTEM: SIS

Record Thickness Measurements As Indicated, Including Weld Width, Edge-To-Edge At 0°

Position	0°	90°	180°	270°
1	N/A			
2	N/A			
3	N/A		N/A	
4	1.8			
5	2.1			

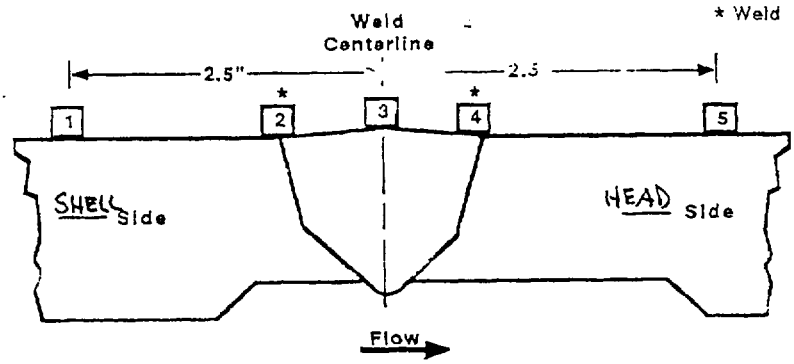

CROWN HEIGHT: 1"
CROWN WIDTH: 2.5"
DIAMETER: 53"
WELD LENGTH: 164.5"

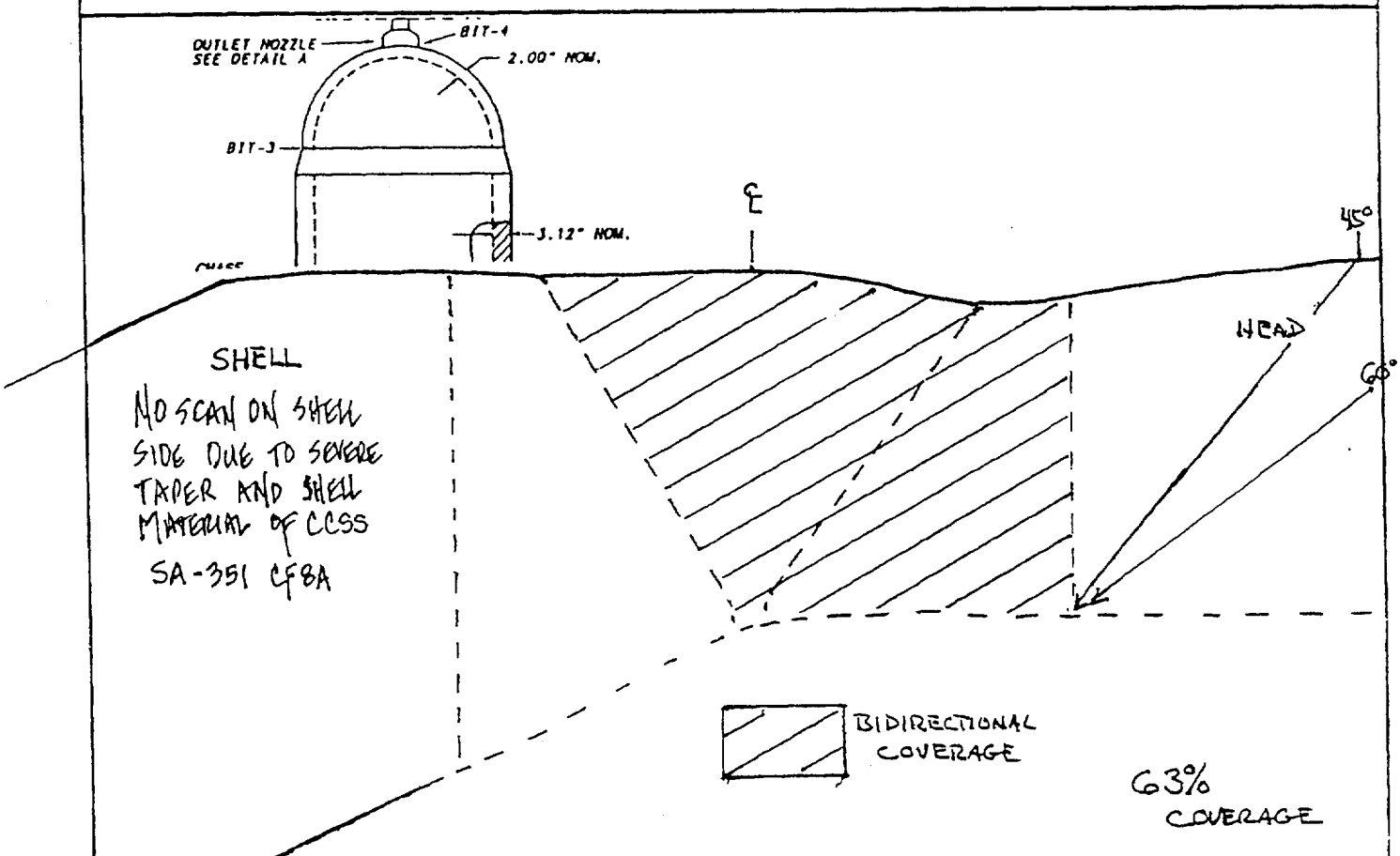

EXAMINER: Doug Greenwood
LEVEL: II
DATE: 9-8-00

REVIEWED BY: W P Bentley
LEVEL: III
DATE: 9-20-00

ANII: B. Earnest
DATE: 9/23/00

PAGE 6 OF 7

TVA 19668 (NP-5-89)

1-103-959-44

TVA Office of Nuclear Power	PROJECT: WBN SYSTEM: SIS Unit: 1 WELD NO.: BIT-3	REPORT NO.: R-0691

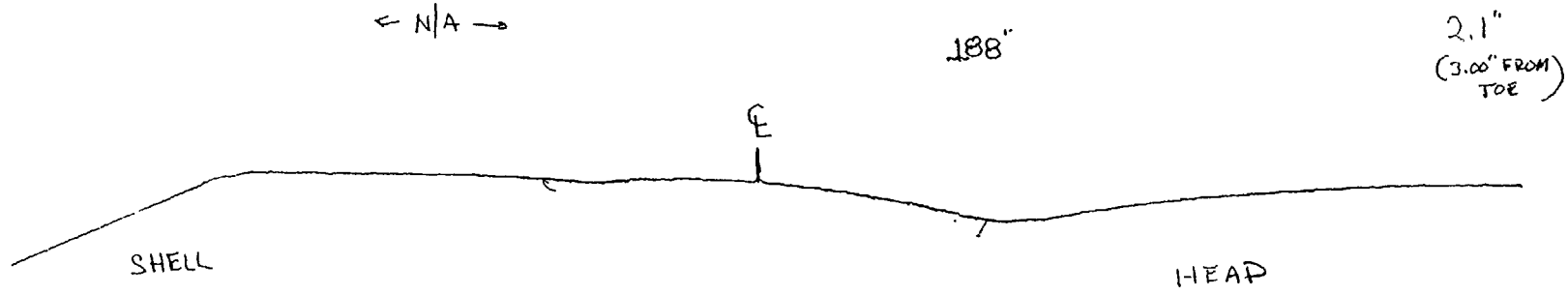

RING IS 6.75"
FROM WELD ℄

BY: Douglas Greenwald LEVEL: II DATE: 9-8-00 PAGE 7 OF 7

TVA 19669 (ONP-6-88)

ENCLOSURE 6

WATTS BAR NUCLEAR PLANT UNIT 1
INSERVICE INSPECTION PROGRAM
REQUEST FOR RELIEF, 1-ISI-12

ENCLOSURE 6

WATTS BAR NUCLEAR PLANT UNIT 1
FIRST 10-YEAR INTERVAL
REQUEST FOR RELIEF 1-ISI-12

SUMMARY:

Volumetric examination of the boron injection tank nozzle-to-head welds during the Unit 1 Cycle 3 refueling outage resulted in less than essentially 100% of ASME code coverage being achieved due to configuration of the nozzles. The configuration of the nozzles prevents ultrasonic examination from the nozzle side, thus preventing full coverage of the required lower one-third examination volume. Volumetric examination of this component is required in accordance with ASME Section XI Table IWC-2500-1, Examination Category C-B, Item Number C2.21. The lower one-third volume weld examination requirement is illustrated by Figure IWC-2500-4(a).

Conformance to the code requirement is impractical to implement due to physical restrictions, therefore, relief is requested in accordance with 10CFR50.55a(g)(5)(iii).

I. COMPONENT:

Boron Injection Tank Nozzle-to-Head Welds - Reference ISI Drawing ISI-0053-C-01 (Attachment 1), weld identifiers BIT-1 and BIT-4.

II. CODE REQUIREMENT:

ASME Section XI, 1989 Edition, Table IWC-2500-1, Examination Category C-B, Item Number C2.21, volumetric examination requirement as defined by Figure IWC-2500-4(a) (Attachment 2).

III. CODE REQUIREMENTS FROM WHICH RELIEF IS REQUESTED:

Relief is requested from performing the required volumetric examination on essentially 100% of the lower one-third volume of the boron injection tank nozzle-to-head welds.

IV. BASIS FOR RELIEF:

The design configuration of the boron injection tank nozzle-to-head welds preclude a full volumetric examination of the required volume for the weld. The design configuration limits ultrasonic examination of the code required examination volume to approximately 80%.

V. ALTERNATIVE EXAMINATION:

The code required 100% volumetric examination of the lower one-third volume of the boron injection tank nozzle-to-head weld was performed on accessible areas to the extent practical given

the design configuration of the shell-to-flange weld. The code required surface examination was performed on both welds and was acceptable as documented on examination reports R-0578 and R-0583 (Attachment 4).

VI. JUSTIFICATION FOR THE GRANTING OF RELIEF:

Volumetric examination of the boron injection tank nozzle-to-head welds during the Unit 1 Cycle 3 refueling outage resulted in less than essentially 100% of ASME code coverage being achieved due to configuration of the nozzles. The configuration of the nozzles prevents ultrasonic examination from the nozzle side, thus preventing full coverage of the required lower one-third examination volume. Volumetric examination of this component is required in accordance with ASME Section XI Table IWC-2500-1, Examination Category C-B, Item Number C2.21. The lower one-third volume weld examination requirement is illustrated by Figure IWC-2500-4(a).

The nozzles are shown in detail on Vendor Drawing 1100E48 Sheet 2 of 2, details F and S (Attachment 3. As noted on examination reports R-0689 and R-0692 (Attachment 4), no ultrasonic scans were performed from the nozzle side of the weld due to the nozzle configuration. A 100% bi-directional coverage was achieved with a 45° scan by scanning over the weld onto the nozzle side. The design configuration limits ultrasonic examination of the code required examination volume to approximately 80%. No indications were detected. The code required surface examination was performed on the welds and was acceptable as documented on examination reports R-0578 and R-0583 (Attachment 4).

Conformance to the code requirement is impractical to implement due to physical restrictions, therefore, relief is requested in accordance with 10CFR50.55a(g)(5)(iii).

VII. IMPLEMENTATION SCHEDULE:

This Request for Relief is applicable to WBN's first inspection interval.

ENCLOSURE 6

WATTS BAR NUCLEAR PLANT UNIT 1
FIRST 10-YEAR INTERVAL
REQUEST FOR RELIEF 1-ISI-12
LIST OF ATTACHMENTS

Attachment 1. ISI Drawing ISI-0053-C-01

Attachment 2. ASME Section XI Figure IWC-2500-4(a), Nozzle-to-Vessel Welds

Attachment 3. Vendor Drawing 1100E48, Sheet 2

Attachment 4. Examination Data Reports:

Liquid Penetrant Examination Report R-0578 for Weld BIT-4.
Liquid Penetrant Examination Report R-0583 for Weld BIT-1.
Ultrasonic Examination Report R-0689 for Weld BIT-1.
Ultrasonic Examination Report R-0692 for Weld BIT-4

ENCLOSURE 6
ATTACHMENT 1

REQUEST FOR RELIEF 1-ISI-12
ISI DRAWING ISI-0053-C-01

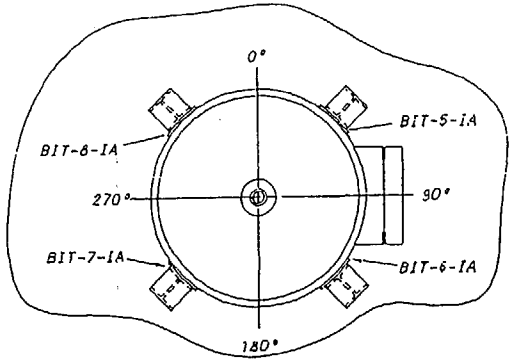

INTEGRAL ATTACHMENTS

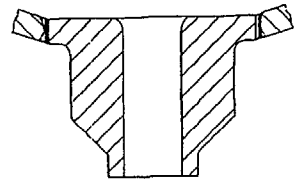

DETAIL A

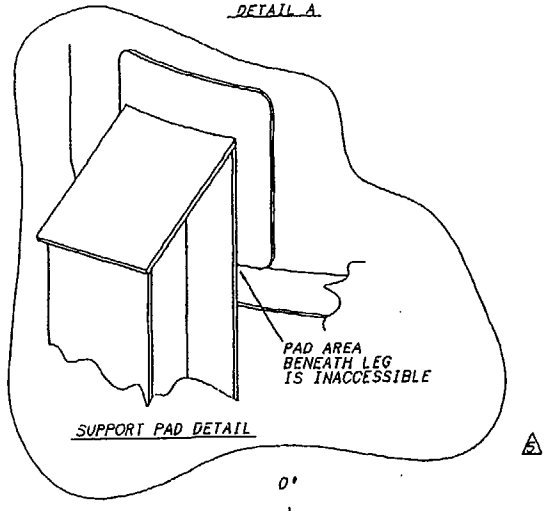

SUPPORT PAD DETAIL

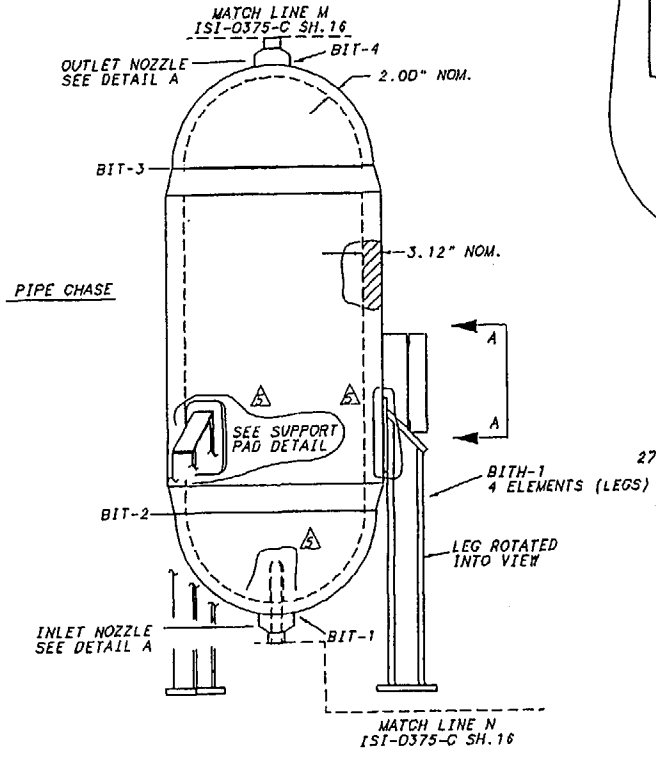

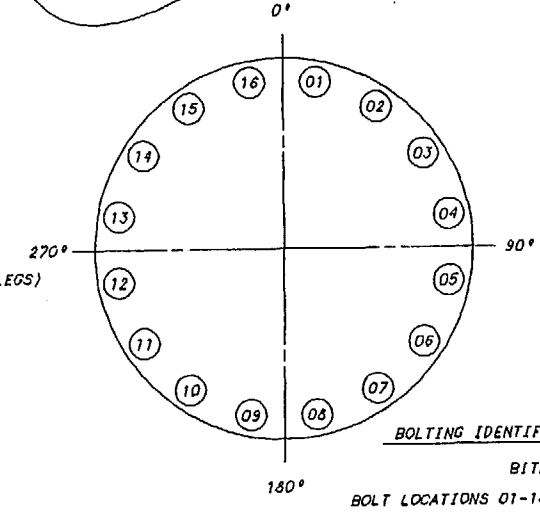

BOLTING IDENTIFIER

BITMWCB-XX

BOLT LOCATIONS 01-16

SECTION A-A

REFERENCE DRAWINGS
WESTINGHOUSE 1100E48
WBN E-2879 IC-74

MATERIAL SPECIFICATIONS

TANK
SHELL
SA-351 CF8A
3.12" NOM.
HEADS
SA240 TP 304
2.00" NOM

NOZZLES
6", SA182 F 304

BOLTING
STUDS
SA 193 GR. B7
2.50-8UN-2A X 13.50
NUTS
SA 193 GR. 2H
2.50-8UN-2B HVY.

ASME CC-2 (EQUIVALENT)

REV.	BY	CHECKED	SUBMITTED	APPROVED	DATE
5	PHB	KEC	TLH	WDD	12-11-00
ADD SUPPORT PADS, SUPPORT PAD DETAIL, AND SPACER PER FCDT DD-04					
4	PHB	KEC	GLB	RDB	2-7-96
MADE C-SIZE, ADD SUPPORT ID, ADD SIZE TO MATERIAL SPEC					
3	PHB	PHB	GLB	FAK	3-22-95
MOVE SI WELDS -6, -7, STS-162 TO ISI-0375-C SH. 16, REVISE TITLE BLOCK					
2	RPG	PHB	KEC	GLB	6-26-93
REVISE IDENTIFIERS FOR PRISTM, ADD CONTINUATIONS, & REDRAWN ON CAD					
1	KEV	JCG		GLB	1-14-83
CHANGED CLASS DESIGNATIONS AND ADD NOZZLE LOCATION					

TENNESSEE VALLEY AUTHORITY

WATTS BAR NUCLEAR PLANT
UNIT 1
BORON INJECTION TANK
WELD AND SUPPORT LOCATIONS

DRAWN: KEV	DATE: 2-19-82	SCALE: NOT TO SCALE	
CHECKED: DAD	APPROVED: GLB	CAD MAINTAINED DRAWING	REV
SUBMITTED:	ISI-0053-C-01		05

ENCLOSURE 6
ATTACHMENT 2

REQUEST FOR RELIEF 1-ISI-12
ASME SECTION XI FIGURE IWC-2500-4(a)

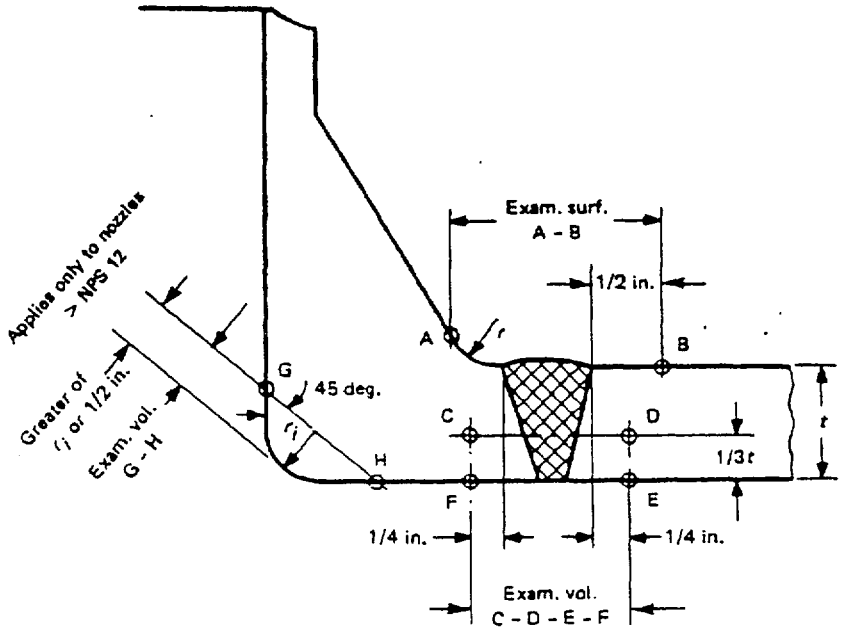

(a)

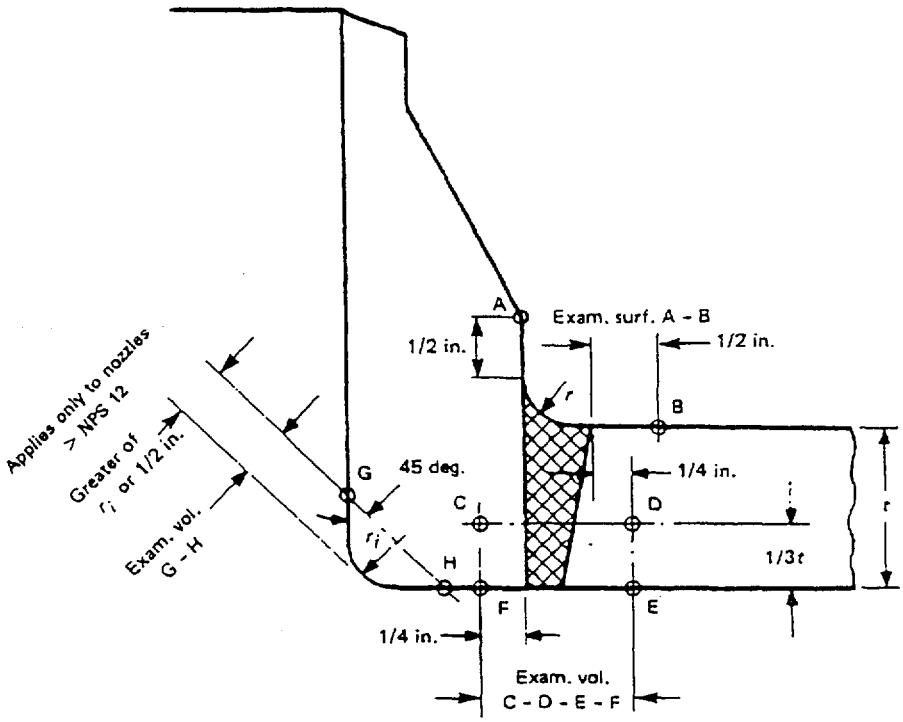

(b)

GENERAL NOTE: Nozzle sizes over NPS 4; vessel thickness over 1/2 in.

FIG. IWC-2500-4 NOZZLE-TO-VESSEL WELDS

ENCLOSURE 6
ATTACHMENT 3

REQUEST FOR RELIEF 1-ISI-12
VENDOR DRAWING 1100E48, SHEET 2

1100E48

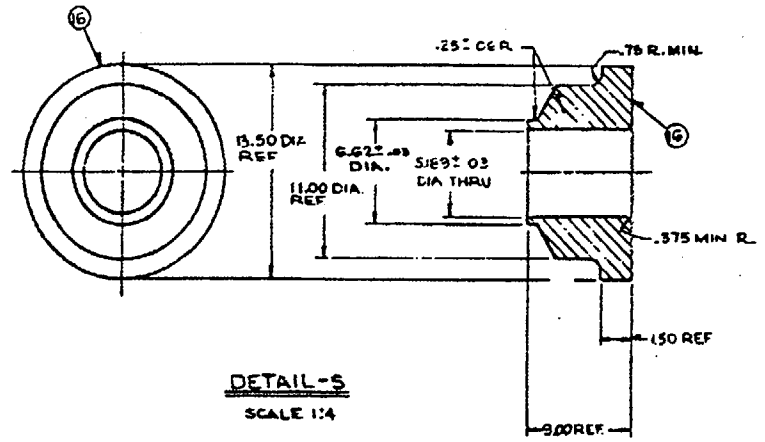

DETAIL-S
SCALE 1:4

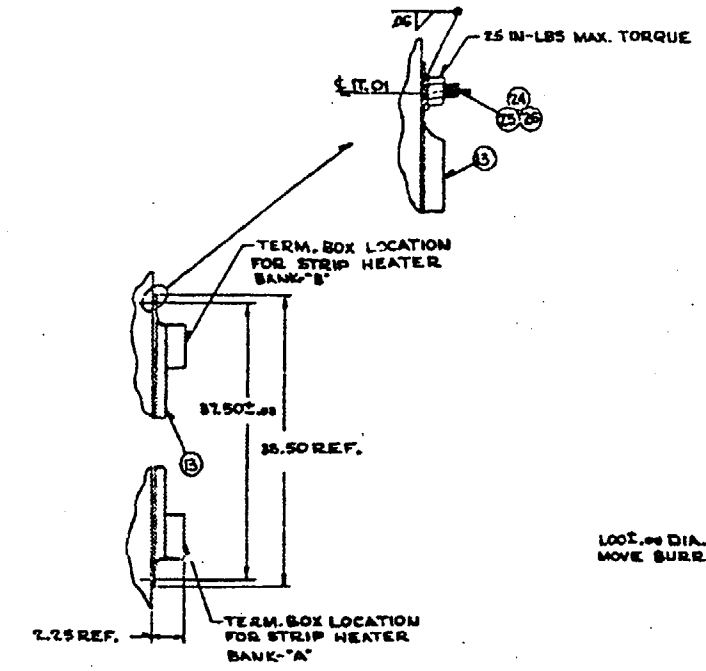

DETAIL-P
SCALE 1:4

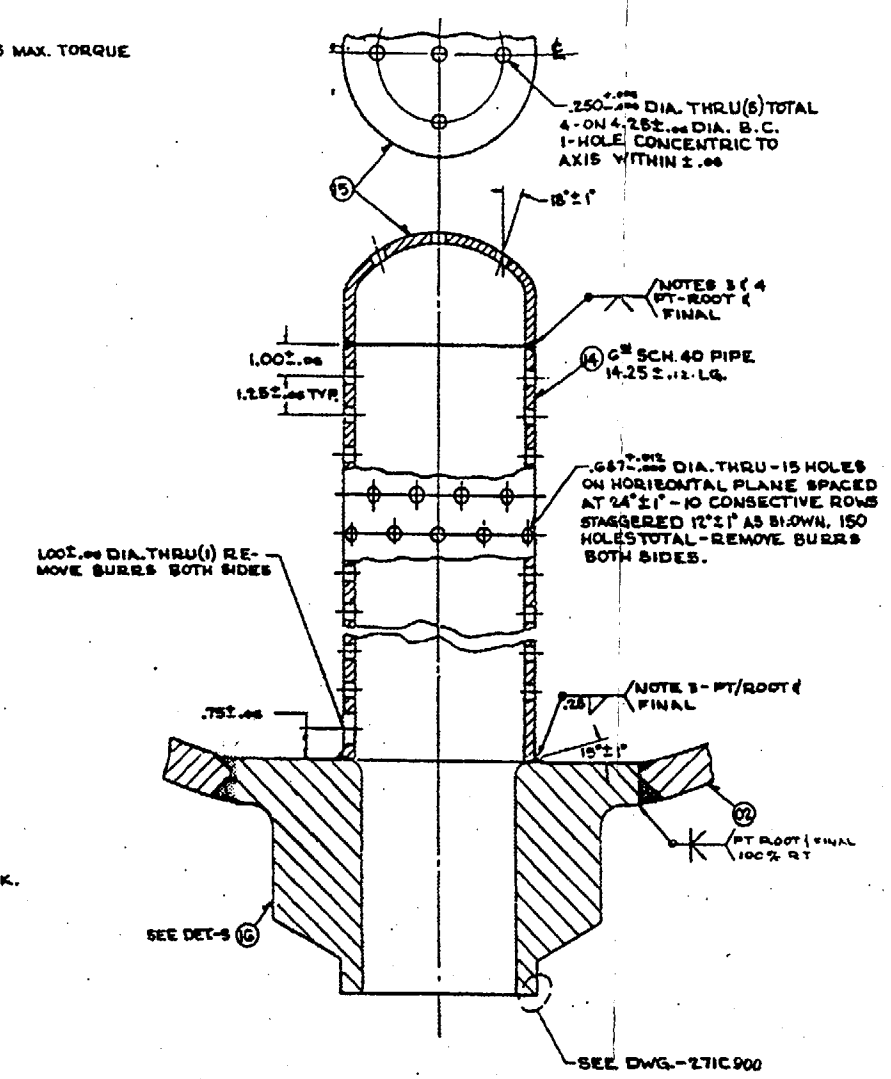

INLET CONNECTION AS SHOWN
OUTLET CONNECTION LESS ITS. 14 & 15

DETAIL-F
SCALE 1:2

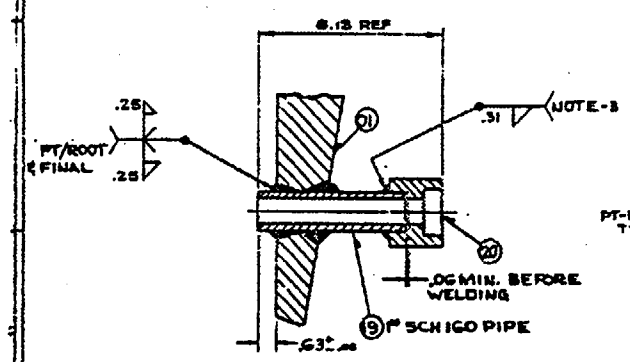

SECTION G-G
SCALE 1:2

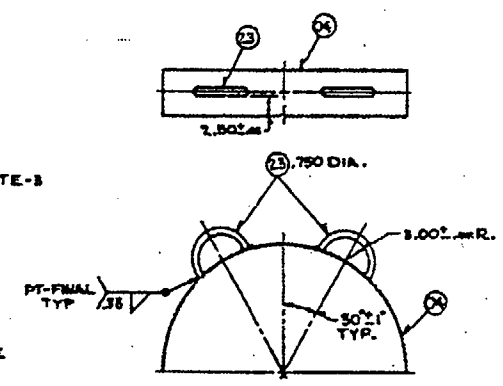

DETAIL-D
SCALE 1:8

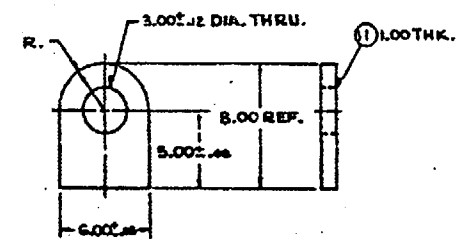

DETAIL-B
SCALE 1:4

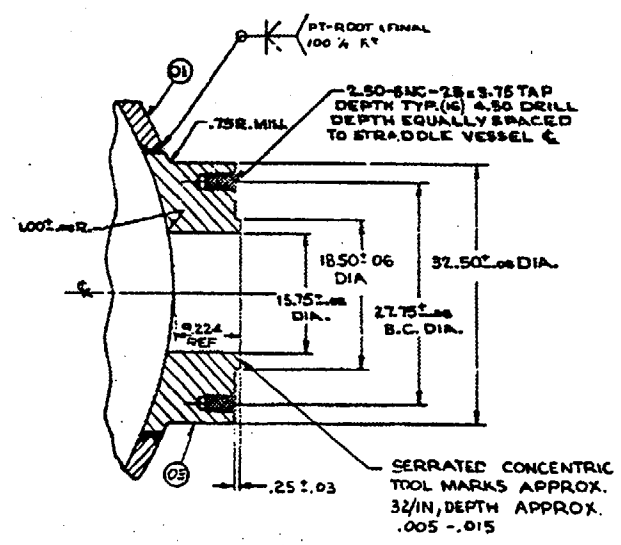

SECTION H-H
SCALE 1:8

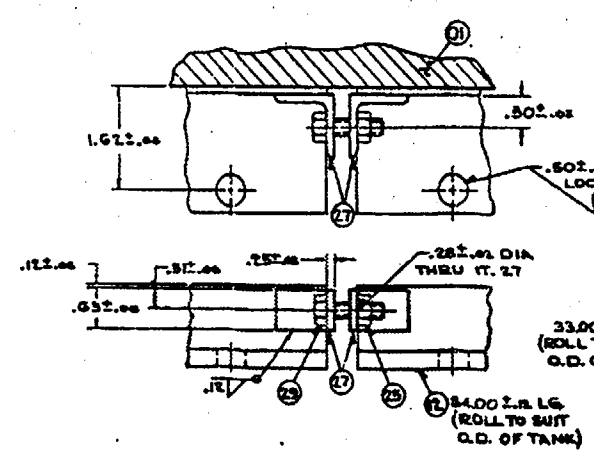

DETAIL-E
SCALE 1:1
UPPER & MIDDLE INSULATION RING
TYP 4 PLACES

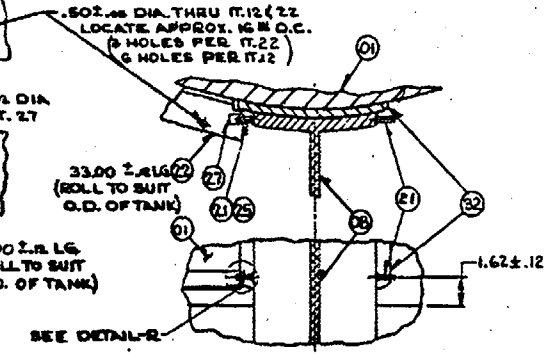

DETAIL-Z
SCALE 1:4 TYP 4 PLACES
LOWER-INSULATION RING ONLY

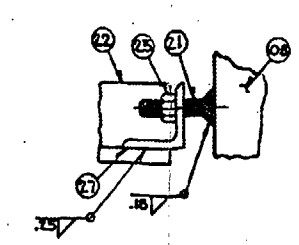

DETAIL-R
SCALE 1:1

Westinghouse Non-Proprietary Class 3

Westinghouse Non-Proprietary Class 3

Westinghouse Electric Corporation
TANK-800GAL.
BORON INJECTION
1100E48
SHEET 2 OF 2

ENCLOSURE 6
ATTACHMENT 4

REQUEST FOR RELIEF 1-ISI-12
EXAMINATION DATA REPORTS

TENNESSEE VALLEY AUTHORITY	RECORD OF LIQUID PENETRANT EXAM	REPORT NUMBER R-0578

PROJECT: WBN UNIT: 1 CYCLE: 03A
SYSTEM: SIS
WELD/COMPONENT ID: BIT-4
CONFIG.: VHEAD TO VNOZ
PROCEDURE: N-PT-9 REV.: 19 TC: N/A
EXAMINATION CODE 89E-01
CODE CLASS: 2 CATEGORY: C-B

EXAMINATION DATE 7 SEPT 2000
START TIME 0915 END TIME: 0958
EXAM SURFACE: ID ☐ OD ☑
PRESERVICE ☐ INSERVICE ☑
REF. DRAWING NO.: WX1100E48

ACCEPTANCE CRITERIA
☐ APPDX. A ☑ APPDX. B
☐ OTHER:

METHOD OF EXAMINATION

METHOD		PENETRANT MATERIALS	
WATER-WASHABLE FLUORESCENT DYE:	☐	BRAND NAME: MAGNAFLUX	
POST-EMULSIFIABLE FLUORESCENT DYE:	☐	PENETRANT SKL-SP	BATCH: 94M05K
SOLVENT-REMOVABLE FLUORESCENT DYE:	☐	REMOVER: SKC-S	BATCH: 98L07K
WATER-WASHABLE VISIBLE DYE:	☐	DEVELOPER: SKD-S2	BATCH: 96J08K
POST-EMULSIFIABLE VISIBLE DYE:	☐	BLACK LIGHT	
SOLVENT REMOVABLE VISIBLE DYE:	☑	METER S/N: N/A AL. DUE DATE: N/A	

PART TEMP: 86 °F PYROMETER S/N: 522343 CAL. DUE DATE: 06/06/01

EXAMINATION RESULTS SATISFACTORY: ☑ UNSATISFACTORY: ☐ NOI NO.: N/A

EXPLANATION OF EXAM RESULTS:
No reportable indications observed.

COMMENTS/LIMITATIONS:

EXAMINER: Carey L. La Shoya LEVEL: II
~~EXAMINER:~~ TRAINEE * LEVEL: TR.
WMB 9/8/00
REVIEWER: WMBuckley LEVEL: III DATE: 9.8.00
* DOCUMENT EXPERIENCE

ANII: B. Ennis
DATE: 9/15/00
PAGE: OF

TENNESSEE VALLEY AUTHORITY	RECORD OF LIQUID PENETRANT EXAM	REPORT NUMBER R-0583

PROJECT: WBN UNIT: 1 CYCLE: 03A
SYSTEM: SIS
WELD/COMPONENT ID: BIT-1
CONFIG.: VNOZ TO VHEAD
PROCEDURE: N-PT-9 REV.: 19 TC: N/A
EXAMINATION CODE 89E-01
CODE CLASS: 2 CATEGORY: C-B

EXAMINATION DATE 09/6/00
START TIME 09:32 END TIME: 10:23
EXAM SURFACE: ID ☐ OD ☑
PRESERVICE ☐ INSERVICE ☑
REF. DRAWING NO.: WX1100E48

ACCEPTANCE CRITERIA
☐ APPDX. A ☑ APPDX. B
☐ OTHER:

METHOD OF EXAMINATION

METHOD		PENETRANT MATERIALS	
WATER-WASHABLE FLUORESCENT DYE:	☐	BRAND NAME: MAGNAFLUX	
POST-EMULSIFIABLE FLUORESCENT DYE:	☐	PENETRANT SKL-SP	BATCH: 94M05K
SOLVENT-REMOVABLE FLUORESCENT DYE:	☐	REMOVER: SKC-S	BATCH: 98L07K
WATER-WASHABLE VISIBLE DYE:	☐	DEVELOPER: SKD-S2	BATCH: 96J08K
POST-EMULSIFIABLE VISIBLE DYE:	☐	BLACK LIGHT	
SOLVENT REMOVABLE VISIBLE DYE:	☑	METER S/N:	
		AL. DUE DATE:	

PART TEMP: 81 °F PYROMETER S/N: 522343 CAL. DUE DATE: 06/06/01

EXAMINATION RESULTS SATISFACTORY: ☑ UNSATISFACTORY: ☐ NOI NO.: N/A

EXPLANATION OF EXAM RESULTS:
NO REPORTABLE CONDITIONS OBSERVED.

COMMENTS/LIMITATIONS:

EXAMINER: Carey L. La Sorsa LEVEL: II
TRAINEE* ~~EXAMINER:~~ [illegible] LEVEL: TR
WMB 9/6/00
REVIEWER: WMB [illegible] LEVEL: III DATE: 9-6-00
* DOCUMENTED TRAINING ONLY

ANII: B. Ermigh
DATE: 9/16/00
PAGE: OF

TENNESSEE VALLEY AUTHORITY	EXAMINATION SUMMARY AND RESOLUTION SHEET	REPORT NUMBER: R-0689

PROJECT: WB UNIT: 01 CYCLE 03A				COMPONENT ID: BIT-1	
EXAMINATION METHOD				SYSTEM: SIS	ISI DWG NO: ISI-0053-C-01
MT ☐	PT ☐	UT ☑	VT ☐	CONFIGURATION:	CATEGORY
PROCEDURE: N-UT-77		REV 0	TC: N/A	VNOZ TO ~~VNOZ~~ VHEAD	C-B
EXAMINER: D. GRONEWOLD		EXAMINER: J. G. ABBOTT		EXAMINER:	EXAMINER:
LEVEL: II		LEVEL: II TCH 11-1-00		LEVEL:	LEVEL:

AN ULTRASONIC EXAMINATION WAS PERFORMED ON WELD BIT-1, A STAINLESS STEEL NOZZEL TO HEAD WELD ON THE BORON INJECTION TANK.

A 45° SHEARWAVE AND A 60°RL WITH 1/2 V CALIBRATIONS. ALSO A 0° LAMINATION SCAN WAS PERFORMED.

ALL SCANS WERE PERFORMED ACROSS THE WELD.

NO INDICATIONS WERE DETECTED.

100% BIDIRECTIONAL COVERAGE WAS ACHIEVED WITH 45° BY SCANNING OVER THE WELD ON TO THE NOZZEL SIDE

80% COVERAGE ACHIEVED ON THE B1 TANK VESSEL NOZZLE TO HEAD WELD. WMB 9-20-00

RESOLUTION BY:	REVIEWED BY:	ANII: B. Earnigh
Douglas Gronewold		DATE: 9/22/00
LEVEL II DATE: 9-7-00	LEVEL: III DATE: 9-20-00	Page: 1 OF 6

TENNESSEE VALLEY AUTHORITY	DIGITAL ULTRASONIC CALIBRATION DATA SHEET	REPORT NUMBER: R-0689

PROJECT: WBNP UNIT: 1 CYCLE: 3 | CALIBRATION DATE: 9-7-00

PROCEDURE: NDT-17 REV: 0 TC: N/A | CALIBRATION BLOCK NO.: WB-44 TEMP: 72 °F

INSTRUMENT: KB DUE DATE: 6-22-01 | SIMULATOR BLOCK NO: 790391

MODEL/TYPE: USN-50 SERIAL NO.: E24253 | THERMOMTER S/N: 562781 DUE DATE: 6-6-01

TRANSDUCER MANUF: KBA / MSEB | COUPLANT ULTRAGEL II BATCH: 00125

S/N 01637 SIZE: 3.5x10 FREQ: 4 MHz | EXAM TYPE: SHEAR ☐ LONG ☒ RL ☐

CABLE TYPE: RG-174 LENGTH: 72 inches

ANGLE VERIFICATION

BLOCK TYPE: ROMPAS S/N: 790391

NOMINAL ANGLE: ⊖ ACTUAL ANGLE: ⊖

DAC

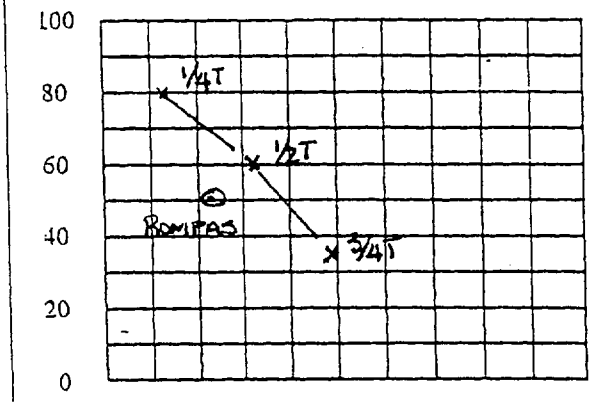

DISPLAY WIDTH: 3.0 inches

INSTRUMENT SETTINGS

REFLECTOR			REFERENCE	MEMORY
SCAN DIRECT.	NTCH	SDH	SENSITIVITY	NUMBER
AXIAL 0°	☐	☒	52 dB	1
CIRC	☐	☐	N/A dB	N/A

FREQ:	BB MHz	REJECT:	⊖ %
ANGLE:	OFF deg	DAMPING:	FIXED ohms
DELAY:	9.102 msec	PULSER:	HIGH *
ZERO:	8.882 msec	FILTER:	FIXED *
VELOCITY:	.2266 msec	REP RATE:	HIGH
RANGE:	3.0 inches	TOF:	☒ PEAK ☐ FLANK
RECTIFIER:	FIXED	POWER:	BATT
DUAL:	☒ ON ☐ OFF	TCG:	☐ ON ☒ OFF

REF. REFLECTOR: ROMPAS SDH GAIN: 52 dB

AMPLITUDE: 50 % METAL PATH: .737 "

CALIBRATION TIMES

INITIAL TIME: 0830 FINAL TIME: 1355

VERIFICATION TIMES	1) 1215	2) 1310	3) N/A	4) N/A	5) N/A	6) N/A	7) N/A	8) N/A	9) N/A

*** PDI QUALIFIED INSTRUMENT SETTINGS:**

VERIFY INSTRUMENT SETTINGS AND CALIBRATION SEQUENCE ARE IN ACCORDANCE WITH TABLE 2 OF THE APPLICABLE PDI QUALIFICATION IMPLEMENTATION PROCEDURE !

LINEARITY CHECK

VERTICAL	SIGNAL 1		100	90	80	70	60	50	40	30	20
	SIGNAL 2		50	45	40	35	30	25	20	15	10
ATTENUATOR	GAIN	SET	-6 dB		-12 dB		SET		+12	SET	+6
	AMP	80%	32 TO 48		16 TO 24		20 %		64 TO 96	40%	64 TO 96
			40		20				80		80

COMMENTS: NONE

WELDS/ITEMS EXAMINED: BIT-1

EXAMINER:	EXAMINER:	REVIEWER:	ANII: B. Earnigh
Douglas Arrowood	J. G. [illegible]	W. Bentley	DATE: 9/22/00
LEVEL: II	LEVEL: II	LEVEL: II DATE: 9-20-00	PG.: 2 OF 6

TENNESSEE VALLEY AUTHORITY	DIGITAL ULTRASONIC CALIBRATION DATA SHEET	REPORT NUMBER: R-0689

PROJECT: WBNP UNIT: 1 CYCLE: 3 | CALIBRATION DATE: 9-7-00

PROCEDURE: N-UT-77 REV: 0 TC: N/A | CALIBRATION BLOCK NO.: WB-44 TEMP: 72 °F

INSTRUMENT: KB DUE DATE: 6-22-01 | SIMULATOR BLOCK NO: 790391

MODEL/TYPE: USN-50 SERIAL NO.: E24253 | THERMOMTER S/N: 562781 DUE DATE: 6-6-01

TRANSDUCER MANUF: KBA | COUPLANT ULTRAGEL II BATCH: 00125

S/N 00DAHM SIZE: .50" FREQ: 1.5 MHz | EXAM TYPE: SHEAR ☒ LONG ☐ RL ☐

CABLE TYPE: RG-174 LENGTH: 72 inches

ANGLE VERIFICATION

BLOCK TYPE: ROMPAS S/N: 790391

NOMINAL ANGLE: 45 ACTUAL ANGLE: 45

DAC

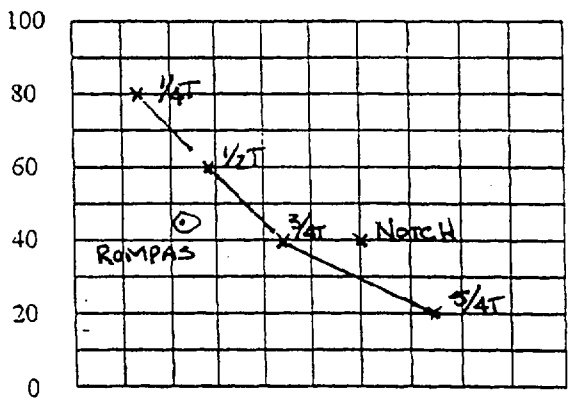

DISPLAY WIDTH: 4.687 inches

INSTRUMENT SETTINGS

REFLECTOR			REFERENCE SENSITIVITY	MEMORY NUMBER
SCAN DIRECT.	NTCH	SDH		
AXIAL	☒	☒	22 dB	2
CIRC	☐	☐	SAME (FLAT BLOCK) dB	

FREQ:	BB	MHz	REJECT:	0	%
ANGLE:	45	deg	DAMPING:	FIXED	ohms
DELAY:	7.672	msec	PULSER:	HIGH	*
ZERO:	7.885	msec	FILTER:	FIXED	*
VELOCITY:	.1227	msec	REP RATE:	HIGH	
RANGE:	4.687	inches	TOF:	☒ PEAK ☐ FLANK	
RECTIFIER:	FIXED		POWER:	BATT	
DUAL:	☐ ON	☒ OFF	TCG:	☐ ON	☒ OFF

REF. REFLECTOR: ROMPAS SDH GAIN: 22.0 dB

AMPLITUDE: 45 % METAL PATH: 1.05 "

CALIBRATION TIMES

INITIAL TIME: 0910 FINAL TIME: 1356

VERIFICATION TIMES	1) 1216	2) 1335	3) N/A	4) N/A	5) N/A	6) N/A	7) N/A	8) N/A	9) N/A

*** PDI QUALIFIED INSTRUMENT SETTINGS:**

VERIFY INSTRUMENT SETTINGS AND CALIBRATION SEQUENCE ARE IN ACCORDANCE WITH TABLE 2 OF THE APPLICABLE PDI QUALIFICATION IMPLEMENTATION PROCEDURE !

LINEARITY CHECK

VERTICAL	SIGNAL 1	100	90	80	70	60	50	40	30	20	
	SIGNAL 2	50	45	40	35	30	25	20	15	10	

ATTENUATOR	GAIN	SET	-6 dB	-12 dB	SET	+12	SET	+6	
	AMP	80%	32 TO 48	16 TO 24	20 %	64 TO 96	40%	64 TO 96	
			40	20		80		80	

COMMENTS: NONE

WELDS/ITEMS EXAMINED: BIT-1

EXAMINER:	EXAMINER:	REVIEWER:	ANII: B. Earnigh
Douglas Greenwold	J. G. Atto	W. Bentley	DATE: 9/22/00
VEL: II	LEVEL: II	LEVEL: III DATE: 9-20-00	PG.: 3 OF 6

TENNESSEE VALLEY AUTHORITY	DIGITAL ULTRASONIC CALIBRATION DATA SHEET	REPORT NUMBER: R-0689

OJECT: WBNP UNIT: 1 CYCLE: 3 | CALIBRATION DATE: 9-7-00

PROCEDURE: N-UT-77 REV: 0 TC: N/A | CALIBRATION BLOCK NO.: WB-44 TEMP: 72 °F

INSTRUMENT: KB DUE DATE: 6-22-01 | SIMULATOR BLOCK NO: 790391

MODEL/TYPE: USN-50 SERIAL NO.: 524253 | THERMOMTER S/N: 562781 DUE DATE: 6-6-01

TRANSDUCER MANUF: SIGMA | COUPLANT ULTRAGEL II BATCH: 00125

S/N 223A-94005 SIZE: 2(18x10) FREQ: 2 MHz | EXAM TYPE: SHEAR ☐ LONG ☐ RL ☒

CABLE TYPE: RG-174 LENGTH: 72 inches

ANGLE VERIFICATION

BLOCK TYPE: ROMPAS S/N: 790391

NOMINAL ANGLE: 60 ACTUAL ANGLE: 60

DAC

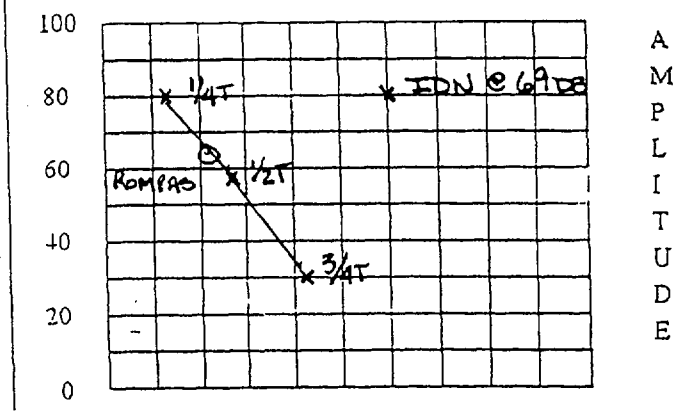

DISPLAY WIDTH: 6.61 inches

INSTRUMENT SETTINGS

REFLECTOR SCAN DIRECT.	NTCH	SDH	REFERENCE SENSITIVITY	MEMORY NUMBER
AXIAL	☐	☒	47 dB	3
CIRC	☐	☐	SAME dB	(FLAT BLOCK)

FREQ:	BB MHz	REJECT:	0 %
ANGLE:	60 deg	DAMPING:	FIXED ohms
DELAY:	8.859 msec	PULSER:	HIGH *
ZERO:	8.873 msec	FILTER:	FIXED *
VELOCITY:	.2295 msec	REP RATE:	HIGH
RANGE:	6.61 inches	TOF:	☒ PEAK ☐ FLANK
RECTIFIER:	FIXED	POWER:	BATT
DUAL:	☒ ON ☐ OFF	TCG:	☐ ON ☒ OFF

REF. REFLECTOR: ROMPAS SDH GAIN: 47 dB

AMPLITUDE: 65 % METAL PATH: 1.45 "

CALIBRATION TIMES

INITIAL TIME: 0935 FINAL TIME: 1357

VERIFICATION TIMES	1) 1217	2) 1325	3)	4)	5)	6)	7)	8)	9)

* PDI QUALIFIED INSTRUMENT SETTINGS:

VERIFY INSTRUMENT SETTINGS AND CALIBRATION SEQUENCE ARE IN ACCORDANCE WITH TABLE 2 OF THE APPLICABLE PDI QUALIFICATION IMPLEMENTATION PROCEDURE !

LINEARITY CHECK

VERTICAL	SIGNAL 1	100	90	80	70	60	50	40	30	20	
	SIGNAL 2	50	45	40	35	30	25	20	15	10	
ATTENUATOR	GAIN	SET	-6 dB	-12 dB	SET	+12	SET	+6			
	AMP	80%	32 TO 48	16 TO 24	20 %	64 TO 96	40%	64 TO 96			
			40	20		80		80			

COMMENTS: NOTCH CAN NOT BE SEEN @ 47 DB, SET @ 80% @ 69 DB.

WELDS/ITEMS EXAMINED: BIT-1

EXAMINER:	EXAMINER:	REVIEWER:	ANII:
Douglas Greenwell	J. G. [illegible]	W W Buttry	B Earnigh
LEVEL: II	LEVEL: II	LEVEL: III DATE: 9-20-00	DATE: 9/22/00
			PG.: 4 OF 6

TENNESSEE VALLEY AUTHORITY	ULTRASONIC PIPING EXAMINATION DATA SHEET	REPORT NUMBER: R-0689

PROJECT: WBNP UNIT: 1 CYCLE: 3 EXAMINATION DATE: 9-7-00

PROCEDURE: N-UT-77 REV: 0 TC: N/A START TIME: 1310 END TIME: 1350

SYSTEM: SIS EXAM SURFACE ☐ ID ☒ OD

COMPONENT ID: BIT-1 MATL. TYPE: ☐ CS ☒ SS ☐ CSCL ☐ CCSS

CONFIGURATION: NOZ TO BOTTOM HEAD (FLOW →) SURFACE TEMP.: 84 °F PYRO. NO.: 562781

CAL DUE DATE: 6-6-01

EXAM ANGLE	0°/45° DEG	60 RL DEG
CIRC. SCAN SENSITIVITY	6A/28 dB	59 dB
AXIAL SCAN SENSITIVITY	6A/28 dB	59 dB

Wo REFERENCE: WELD ℄

Lo REFERENCE: ℄ OF MANWAY

IND. NO.	L (in) FROM REF. L1	L MAX	L2	AT MAX AMP W MAX	MP MAX	D MAX	MAX AMP %DAC	EXAM NO. 3-14	NOM. ANG.	N R I	IND. INFO: TYPE, DAMPING, ETC.
							%	2	0°	✓	NRI
							%	3	45°	✓	NRI
							%	5	45°	✓	NRI
							%	6	45°	✓	NRI
							%	3	60° RL	✓	NRI
							%	5	60° RL	✓	NRI
							%	6	60° RL	✓	NRI
							%				
							%				
							%				
							%				
							%				
							%				
							%				

REMARKS / LIMITATIONS: ONE SIDED EXAMINATION DUE TO NOZ. CONFIGURATION.

EXAMINER: Douglas Greenwald LEVEL: II ANII: B. Earnigh

EXAMINER: Jack M. [illegible] LEVEL: II DATE: 9/22/00

REVIEWER: [illegible] LEVEL: III DATE: 9-20-00 PAGE 5 OF 6

TVA	WALL THICKNESS PROFILE SHEET	REPORT NO: R-0689

PROJECT: WBNP
UNIT: 1 C3

WELD NO: BIT-1
SYSTEM: SIS

Record Thickness Measurements As Indicated, Including Weld Width, Edge-To-Edge At 0°

Position	0°	90°	180°	270°
1	N/A			
2	N/A			
3	N/A			
4	1.90			
5	1.90			

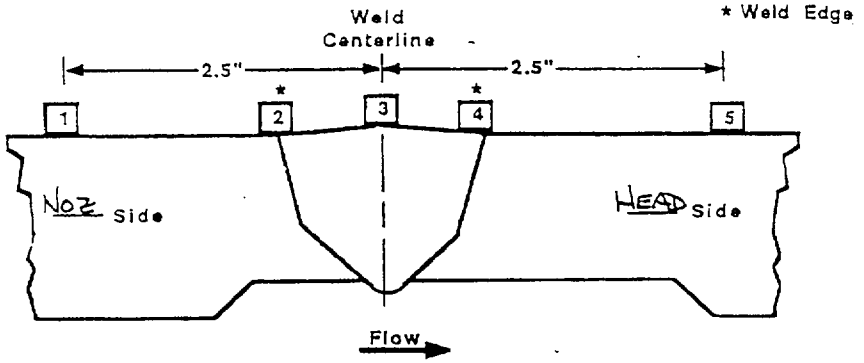

CROWN HEIGHT: .10" – .20"
DIAMETER: 10" DIA NOZ
CROWN WIDTH: 2.4"
WELD LENGTH: 44.25"

NO THICKNESS READING ACHIEVED ON WELD OR NOZ. SIDE.

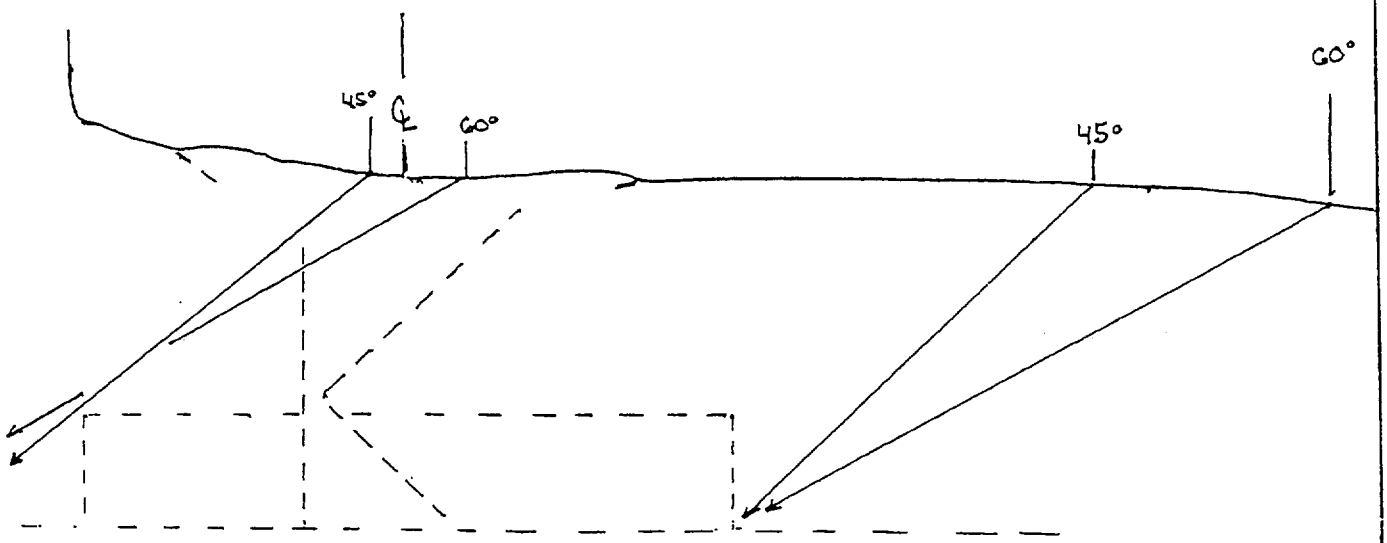

100% COVERAGE 45°

EXAMINER: Douglas Greenwald
LEVEL: II
DATE: 9-8-00

REVIEWED BY: W M Bentley
LEVEL: III
DATE: 9.20.00

B. Earnigh
DATE: 9/22/00

PAGE 6 OF 6

TVA 19668 (NP-5-89)

1-108 999-44

TENNESSEE VALLEY AUTHORITY	EXAMINATION SUMMARY AND RESOLUTION SHEET	REPORT NUMBER: R-0692

PROJECT: WB UNIT: 01 CYCLE 03A				COMPONENT ID: BIT-4	
EXAMINATION METHOD				SYSTEM: SIS	ISI DWG NO: ISI-0053-C-01
MT ☐	PT ☐	UT ☑	VT ☐	CONFIGURATION:	CATEGORY
PROCEDURE: N-UT-77		REV 0	TC: N/A	NOZ. ~~VHEAD~~ TO VHEAD	C-B
EXAMINER: J. G. ABBOTT		EXAMINER: D. GRONEWOLD		EXAMINER: N/A	EXAMINER: N/A
LEVEL: II		LEVEL: II		LEVEL:	LEVEL:

AN ULTRASONIC EXAMINATION WAS PERFORMED ON WELD #BIT-4, A STAINLESS STEEL HEAD TO NOZZEL WELD ON THE BORON INJECTION TANK

A 45° SHEARWAVE AND A 60°RL WITH 1/2 V CALIBRATIONS WERE USED FOR THIS EXAM. ALSO A 0° LAMINATION SCAN WAS PERFORMED.

NO INDICATIONS WERE DETECTED.

100% BIDIRECTIONAL COVERAGE WAS ACHIEVED WITH 45° BY SCANNING OVER THE WELD AND ONTO THE NOZZEL SIDE.

80% COVERAGE ACHIEVED ON THE BTANK VESSEL NOZZLE TO ~~HEAD~~ HEAD. 9-20-00

RESOLUTION BY:	REVIEWED BY:	ANII: B. Tamizh
LEVEL II DATE: 9-8-00	LEVEL: III DATE: 9-20-00	DATE: 9/23/00
		Page: 1 OF 6

TENNESSEE VALLEY AUTHORITY	DIGITAL ULTRASONIC CALIBRATION DATA SHEET	REPORT NUMBER: R-0692

PROJECT: WBNP UNIT: 1 CYCLE: 3	CALIBRATION DATE: 9-8-00
PROCEDURE: N-UT-77 REV: 0 TC: N/A	CALIBRATION BLOCK NO.: WB-44 TEMP: 72 °F
INSTRUMENT: KB DUE DATE: 6-22-01	SIMULATOR BLOCK NO: 790391
MODEL/TYPE: USN-50 SERIAL NO.: E24253	THERMOMTER S/N: 562781 DUE DATE: 6-6-01
TRANSDUCER MANUF: KBA MS68	COUPLANT ULTRAGEL BATCH: 00125
S/N 01637 SIZE: 3.5x10 FREQ: 4 MHz	EXAM TYPE: SHEAR ☐ LONG ☒ RL ☐
CABLE TYPE: RG-174 LENGTH: 72 inches	ANGLE VERIFICATION
	BLOCK TYPE: ROMPAS S/N: 790391
DAC	NOMINAL ANGLE: ⊖ ACTUAL ANGLE: ⊖

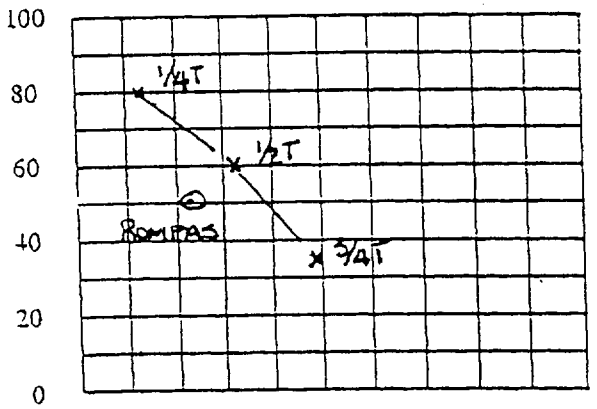

DISPLAY WIDTH: 3.0 inches

REFLECTOR: ROMPAS SDH GAIN: 52 dB

AMPLITUDE: 50 % METAL PATH: .737 "

INSTRUMENT SETTINGS

REFLECTOR SCAN DIRECT.	NTCH	SDH	REFERENCE SENSITIVITY	MEMORY NUMBER
AXIAL 0°	☐	☒	52 dB	1
CIRC	☐	☐	N/A dB	N/A

FREQ: BB MHz	REJECT: ⊖ %
ANGLE: OFF deg	DAMPING: FIXED ohms
DELAY: 9.102 msec	PULSER: HIGH *
ZERO: 8.882 msec	FILTER: FIXED *
VELOCITY: .2266 msec	REP RATE: HIGH
RANGE: 3.0 inches	TOF: ☒ PEAK ☐ FLANK
RECTIFIER: FIXED	POWER: BATT
DUAL: ☒ ON ☐ OFF	TCG: ☐ ON ☒ OFF

CALIBRATION TIMES (1405)

INITIAL TIME: 1210 FINAL TIME: ↓ MMB 9/20/00

VERIFICATION TIMES	1) 1220	2) 1305	3) N/A	4) N/A	5) N/A	6) N/A	7) N/A	8) N/A	9) N/A

* PDI QUALIFIED INSTRUMENT SETTINGS:

VERIFY INSTRUMENT SETTINGS AND CALIBRATION SEQUENCE ARE IN ACCORDANCE WITH TABLE 2 OF THE APPLICABLE PDI QUALIFICATION IMPLEMENTATION PROCEDURE !

LINEARITY CHECK

VERTICAL	SIGNAL 1	100	90	80	70	60	50	40	30	20	
	SIGNAL 2	50	45	40	35	30	25	20	15	10	
ATTENUATOR	GAIN	SET	-6 dB	-12 dB	SET	+12	SET	+6			
	AMP	80%	32 TO 48	16 TO 24	20 %	64 TO 96	40%	64 TO 96			
			40	20		80		80			

COMMENTS:	WELDS/ITEMS EXAMINED:
	BIT-4

EXAMINER:	EXAMINER:	REVIEWER:	ANII: B. Earnigh
Douglas Greenwald	John L. Atto	V.W. Bentley	DATE: 9/23/00
L: II	II	III 9-20-00	2 6

TENNESSEE VALLEY AUTHORITY	DIGITAL ULTRASONIC CALIBRATION DATA SHEET	REPORT NUMBER: R-0692

PROJECT: WBNP UNIT: 1 CYCLE: 3 CALIBRATION DATE: 9-8-00

PROCEDURE: N-UT-77 REV: 0 TC: N/A CALIBRATION BLOCK NO.: WB-44 TEMP: 72 °F

INSTRUMENT: KB DUE DATE: 6-22-01 SIMULATOR BLOCK NO: 790391

MODEL/TYPE: USN-50 SERIAL NO.: E242S3 THERMOMTER S/N: 562781 DUE DATE: 6-6-01

TRANSDUCER MANUF: KBA COUPLANT ULTRAGEL II BATCH: 00125

S/N DOD4HM SIZE: .50" FREQ: 1.5 MHz EXAM TYPE: SHEAR ☒ LONG ☐ RL ☐

CABLE TYPE: RG-174 LENGTH: 72 inches

ANGLE VERIFICATION

BLOCK TYPE: ROMPAS S/N: 790391

NOMINAL ANGLE: 45 ACTUAL ANGLE: 45

DAC

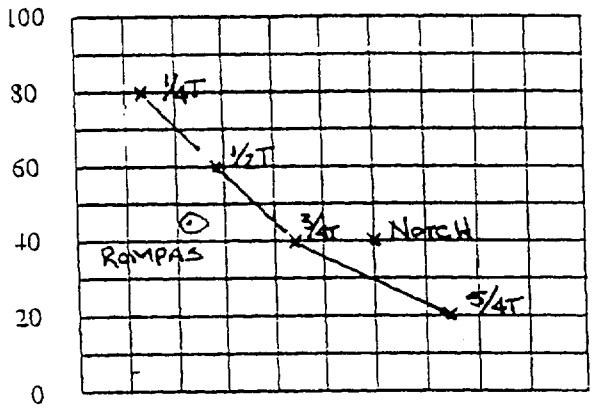

DISPLAY WIDTH: 4.687 inches

REFLECTOR: ROMPAS SDH GAIN: 22.0 dB

AMPLITUDE: 45 % METAL PATH: 1.05 "

INSTRUMENT SETTINGS

REFLECTOR SCAN DIRECT.	NTCH	SDH	REFERENCE SENSITIVITY	MEMORY NUMBER
AXIAL	☒	☒	22 dB	2
CIRC	☐	☐	SAME (FLAT BLOCK) dB	

FREQ:	BB	MHz	REJECT:	0	%
ANGLE:	45	deg	DAMPING:	FIXED	ohms
DELAY:	7.672	msec	PULSER:	HIGH	*
ZERO:	7.885	msec	FILTER:	FIXED	*
VELOCITY:	.1227	msec	REP RATE:	HIGH	
RANGE:	4.687	inches	TOF:	☒ PEAK	☐ FLANK

RECTIFIER: FIXED POWER: BATT

DUAL: ☐ ON ☒ OFF TCG: ☐ ON ☒ OFF

CALIBRATION TIMES

INITIAL TIME: 1212 FINAL TIME: 1406

VERIFICATION TIMES	1) 1230	2) 1315	3) N/A	4) N/A	5) N/A	6) N/A	7) N/A	8) N/A	9) N/A

* PDI QUALIFIED INSTRUMENT SETTINGS:

VERIFY INSTRUMENT SETTINGS AND CALIBRATION SEQUENCE ARE IN ACCORDANCE WITH TABLE 2 OF THE APPLICABLE PDI QUALIFICATION IMPLEMENTATION PROCEDURE !

LINEARITY CHECK

VERTICAL	SIGNAL 1	100	90	80	70	60	50	40	30	20	
	SIGNAL 2	50	45	40	35	30	25	20	15	10	

ATTENUATOR	GAIN	SET	-6 dB	-12 dB	SET	+12	SET	+6
	AMP	80%	32 TO 48	16 TO 24	20 %	64 TO 96	40%	64 TO 96
			40	20		80		80

COMMENTS:

WELDS/ITEMS EXAMINED:

BIT-4

EXAMINER:	EXAMINER:	REVIEWER:	ANII:
Douglas Greenwald	John D. [illegible]	[illegible]	G. Earnight
L: II	LEVEL: II	LEVEL: III DATE: 9-20-00	DATE: 9/23/00

PAGE 3 OF 6

TENNESSEE VALLEY AUTHORITY	DIGITAL ULTRASONIC CALIBRATION DATA SHEET	REPORT NUMBER: R-0692

PROJECT: WBNP UNIT: 1 CYCLE: 3 | CALIBRATION DATE: 9-8-00

PROCEDURE: N-UT-77 REV: 0 TC: N/A | CALIBRATION BLOCK NO.: WB-44 TEMP: 72 °F

INSTRUMENT: KB DUE DATE: 6-22-01 | SIMULATOR BLOCK NO: 790391

MODEL/TYPE: USN-50 SERIAL NO.: E24253 | THERMOMTER S/N: 562781 DUE DATE: 6-6-01

TRANSDUCER MANUF: SIGMA | COUPLANT ULTRAGEL II BATCH: 00125

S/N 223A-94005 SIZE: 2(18x.5) FREQ: 2 MHz | EXAM TYPE: SHEAR ☐ LONG ☐ RL ☒

CABLE TYPE: RG-174 LENGTH: 72 inches

ANGLE VERIFICATION

BLOCK TYPE: ROMPAS S/N: 790391

NOMINAL ANGLE: 60 ACTUAL ANGLE: 60

DAC

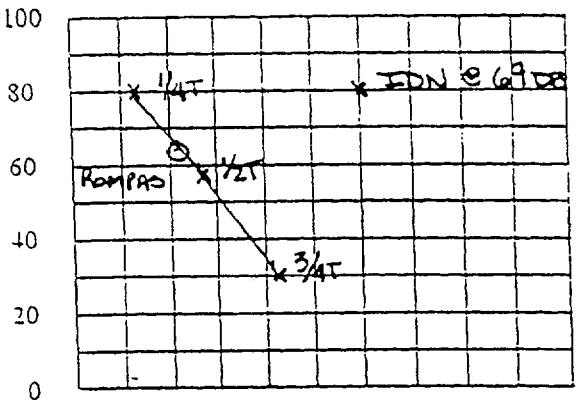

DISPLAY WIDTH: 6.61 inches

INSTRUMENT SETTINGS

REFLECTOR SCAN DIRECT.	NTCH	SDH	REFERENCE SENSITIVITY	MEMORY NUMBER
AXIAL	☐	☒	47 dB	3
CIRC	☐	☐	SAME dB	(FLAT BLOCK)

FREQ:	BB MHz	REJECT:	0 %
ANGLE:	60 deg	DAMPING:	FIXED ohms
DELAY:	8.859 msec	PULSER:	HIGH *
ZERO:	8.873 msec	FILTER:	FIXED *
VELOCITY:	.2295 msec	REP RATE:	HIGH
RANGE:	6.61 inches	TOF:	☒ PEAK ☐ FLANK
RECTIFIER:	FIXED	POWER:	BATT
DUAL:	☒ ON ☐ OFF	TCG:	☐ ON ☒ OFF

REFLECTOR: ROMPAS SDH GAIN: 47 dB

AMPLITUDE: 65 % METAL PATH: 1.45 "

CALIBRATION TIMES

INITIAL TIME: 1214 FINAL TIME: 1407

VERIFICATION TIMES	1) 1250	2) 1335	3) N/A	4) N/A	5) N/A	6) N/A	7) N/A	8) N/A	9) N/A

* PDI QUALIFIED INSTRUMENT SETTINGS:

VERIFY INSTRUMENT SETTINGS AND CALIBRATION SEQUENCE ARE IN ACCORDANCE WITH TABLE 2 OF THE APPLICABLE PDI QUALIFICATION IMPLEMENTATION PROCEDURE !

LINEARITY CHECK

VERTICAL	SIGNAL 1	100	90	80	70	60	50	40	30	20	
	SIGNAL 2	50	45	40	35	30	25	20	15	10	
ATTENUATOR	GAIN	SET	-6 dB	-12 dB	SET	+12	SET	+6			
	AMP	80%	32 TO 48	16 TO 24	20 %	64 TO 96	40%	64 TO 96			
			40	20		80		80			

COMMENTS: NOTCH CAN NOT BE SEEN @ 47 DB, SET @ 80% @ 69 DB.

WELDS/ITEMS EXAMINED: BIT-1

EXAMINER:	EXAMINER:	REVIEWER:	ANII: B. Earnight
LEVEL: II	LEVEL: II	LEVEL: III DATE: 9-20-00	DATE: 9/23/00

PG.: 4 OF 6

TENNESSEE VALLEY AUTHORITY	ULTRASONIC PIPING EXAMINATION DATA SHEET	REPORT NUMBER: R-0692

PROJECT: WBN UNIT: 1 CYCLE: 3 EXAMINATION DATE: 9-8-00

PROCEDURE: N-UT-77 REV: 0 TC: N/A START TIME: 1220 END TIME: 1304

SYSTEM: SIS EXAM SURFACE ☐ ID ☑ OD

COMPONENT ID: BIT-4 MATL. TYPE: ☐ CS ☑ SS ☐ CSCL ☐ CCSS

C ONFIGURATION

HEAD TO NOZZEL

FLOW →

SURFACE TEMP.: 72 °F PYRO. NO.: 562781

CAL DUE DATE:

EXAM ANGLE	0°/45° DEG	60° DEG
CIRC. SCAN SENSITIVITY	64/28 dB	59 dB
AXIAL SCAN SENSITIVITY	64/28 dB	59 dB

Wo REFERENCE: WELD ℄

Lo REFERENCE: ℄ OF MANWAY

IND. NO.	L (in) FROM REF. L1	L MAX	L2	AT MAX AMP W MAX	MP MAX	D MAX	MAX AMP %DAC	EXAM NO. 3-14	NOM. ANG.	N R I	IND. INFO: TYPE, DAMPING, ETC.
							%	2	0°	✓	LAMINATION SCAN
							%	3	45°	✓	
							%	5	45°	✓	
							%	6	45°	✓	
							%	3	60° RL	✓	
							%	5	60° RL	✓	
							%	6	60° RL	✓	
							%				
							%				
							%				
							%				
							%				
							%				
							%				

REMARKS / LIMITATIONS: ONE SIDED EXAMINATION DUE TO NOZZELLE CONFIGURATION. WAB 9-20-00

EXAMINER: [signature] LEVEL: II ANII: 9/23/00 B. Carroll

EXAMINER: Douglas Greenewald LEVEL: II DATE: 9-8-00

REVIEWER: [signature] LEVEL: III DATE: 9-20-00 PAGE 5 OF 6

TVA	WALL THICKNESS PROFILE SHEET	REPORT NO: R-0692

PROJECT: WBN
UNIT: 1
WELD NO: BIT-4
SYSTEM: SIS

Record Thickness Measurements As Indicated, Including Weld Width, Edge-To-Edge At 0°

Position	0°	90°	180°	270°
1	1.85"			
2	1.81"			
3	N/A		N/A	
4	N/A			
5	N/A			

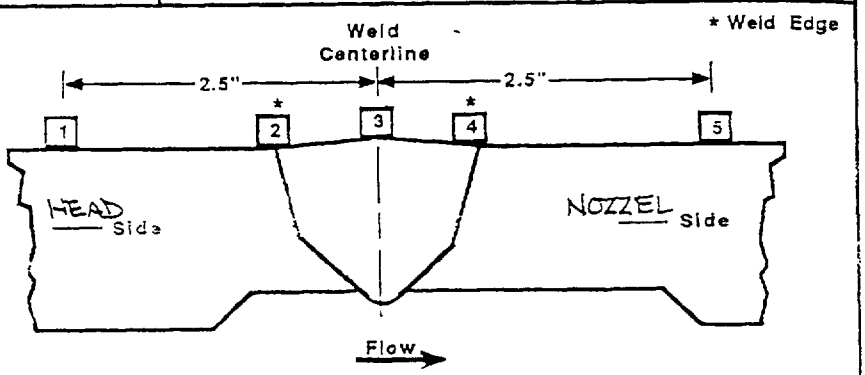

CROWN HEIGHT: .1"
CROWN WIDTH: 2.75
DIAMETER: 13.5"
WELD LENGTH: 44.25"

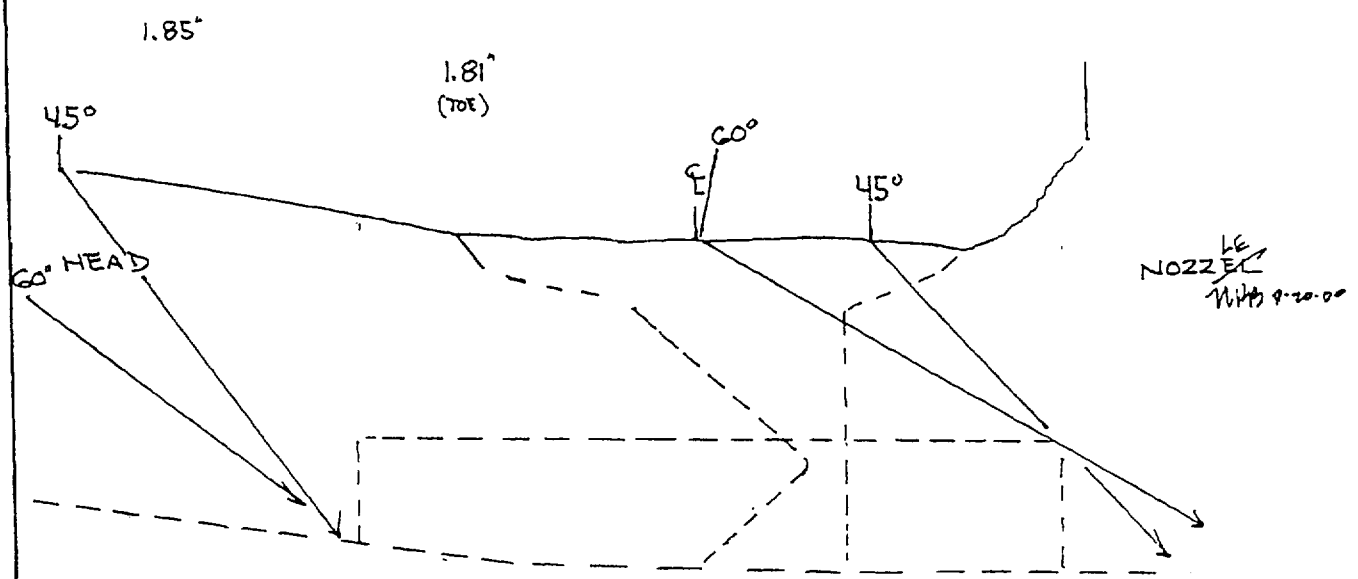

EXAMINER: Douglas Stonewall	REVIEWED BY: [signature]	ANII: B. Earnish
LEVEL: II	LEVEL: III DATE: 9-20-00	DATE: 9/23/00
DATE: 9-8-00		PAGE 6 OF 6

TVA 19668 (NP-5-89)

1.102.009.44

W47 001018 001

ENCLOSURE 7

CALCULATION OF ASME CODE COVERAGE FOR SECTION XI NDE EXAMINATIONS

"QUALITY RELATED"

Prepared By: Joel W. Whitaker Date: 10/18/00

Technical Review: N. R. Bentley NDE Level III, Date: 10/18/00

ISO Approval: W. E. Freeman Date: 10/18/00

Rev. No.	Date	Description
0	4/3/96	Initial issue.
1	8/15/97	Incorporate TC 97-09.
2	10/18/00	General revision to incorporate 10CFR50.55a ruling change which implements Appendix VIII

1.0 Scope

The scope of this procedure is to provide generic guidelines for calculating the ASME Section XI code coverage and augmented examination coverage obtained during volumetric and surface examinations. This procedure incorporates the requirements of Code Case N-460 and NRC Information Notice 98-42. This procedure is not applicable for calculating the examination coverage for RPV examinations performed in accordance with Appendix VIII.

2.0 Purpose

This procedure applies to the calculation of ASME Section XI Code coverage for vessel welds (excluding the RPV welds performed in accordance with Appendix VIII) piping welds, and integral attachments. This procedure applies when performing surface or volumetric examinations and may be used as a guide when calculating the examination coverage for preservice and inservice examinations. Coverage limitations may be due to an obstruction, interference, geometric configuration or other applicable reason.

3.0 References

3.1 ASME Section XI 1989 Edition

3.2 ASME Code Case N-460

3.3 10CFR 50.55a, as amended by the Federal Register Notice, Vol. 64, No. 183, dated September 22, 1999 (Final Rule)- Implementation of Appendix VIII as executed by the Performance Demonstration Initiative (PDI) Program Description Document, Rev. 1, Change 1.

3.4 Guideline for the Implementation of Appendix VIII and 10CFR 50.55a, Rev. D, April 18, 2000

3.5 NRC Information Notice 98-42

4.0 Definitions

4.1 Examination Coverage- The percentage of the examination surface or volume obtained during the performance of the examination.

4.2 Examination Surface- The surface of the weld and base material required to be examined by ASME Section XI or other requirement using a surface examination method.

4.3 Examination Volume- The volume of weld and base material required to be examined by ASME Section XI or other requirement using a volumetric examination method.

4.4 Scan Limitation- the inability to scan the surface(s) as required by procedure due to interferences.

4.5 Surface Limitation- the inability to perform a surface examination of the required surface(s) because of an interference.

4.6 Volumetric Limitation- the inability to examine the required volume because of the geometric configuration, a physical interference, or a metallurgical condition of the material being examined.

5.0 General

5.1 During the performance of inservice inspections, ASME Section XI requires examination coverage to be essentially 100% of the weld area or volume. For examination coverage less than 100%, TVA has implemented ASME Code Case N-460 which states that when the entire examination volume or area cannot be examined due to interference by another component or part geometry, a reduction in examination coverage for Class 1 or Class 2 welds may be accepted provided the reduction in coverage for that weld is less than 10%. (NRC Information Notice 98-42 further defines the >90% rule to include all welds and other areas required by ASME Section XI.

5.2 Surface examinations are typically conducted on the weld area plus a defined amount of base material on each side of the weld. Volumetric examinations specify a particular volume to be examined. The Section XI required examination volume or surface examination area for each type of weld is depicted in figures of IWB-2500 or IWC-2500 as applicable. As depicted for piping welds, volume width generally constitutes the weld plus 1/4t on each side while volume thickness generally constitutes the lower 1/3 of the piping thickness for the length of the weld. The exception normally includes code category B-O which includes the weld plus 1/2 inch and full volume for the length of the weld. As depicted, for vessel welds, the volume width generally constitutes the weld plus 1/2t on each side of the weld while volume thickness generally constitutes the entire component thickness (i.e. full volume). The volume changes with variations in weld configuration (e.g. transition between different pipe thickness or vessel weld configurations).

Note: Risk-Informed (RI) programs require larger volumes in certain areas.

5.3 The required examination volume or area shall be verified prior to calculation of the limitation.

6.0 Documenting and Calculating Examination Coverage

6.1 While performing a surface or ultrasonic examination, the NDE Examiner shall make every attempt to examine 100 percent of the examination area or volume.

6.2 When practical, the two beam path directions for ultrasonic examinations should be performed from two sides of the weld or additional angles employed in order to maximize coverage.

6.3 If 100% percent of the examination surface or volume cannot be examined, the NDE Examiner should perform the following under the direction of the inspection coordinator or the NDE Level III:

6.3.1 Perform additional examinations with higher angles in order to maximize cover for ultrasonic exams.

6.3.2 Perform another surface method (i.e., PT in lieu of MT) in order to maximize coverage.

6.3.3 Perform alternative NDE methods if applicable.

6.4 The examiner shall accurately document all limitations, obstructions, interferences, geometric configurations or other applicable reasons for not obtaining the required code coverage.

6.5 The examiner shall document the limitation on a sketch. Examination coverage estimates may be performed by the examiner or the reviewer.

7.0 Calculation Basis

7.1 Volumetric Examinations- Piping Welds and Vessels 2 inches and less in thickness

a) For welds with access from both sides, each of the four required scans are equal to 25% .

b) For welds with access from one side only due to interference/configuration (e.g. pipe to valve), the axial scan (scan 3 or 4) equals 50% and the circumferential scans (scan 5 and 6) each equal 25% for total of 100%.

c) Examination volume coverage may be increased as previously discussed or by use of refracted longitudinal wave techniques on stainless steel or dissimilar metal welds. Use of refracted longitudinal waves to penetrate stainless steel weld material will increase the examination volume coverage by the amount depicted on the examination coverage drawing.

d) The effects of adjacent component interferences (e.g. welded lug attachments) along the weld length are also taken into account with the reduction in coverage identified as a percentage of reduced volume.

8.0 Surface Examinations - Piping Welds And Integral Attachments

8.1 Examination area coverage calculations are based upon one of the following suppositions:

a) The total examination area is calculated, typically length x width, then the total area of limitation or interference is subtracted from the total examination area.

b) The area of achieved coverage is divided by the total examination area for percentage of examination achieved.

9.0 Ultrasonic Examinations - Vessel Welds

NOTE: THIS IS NOT APPLICABLE FOR APPENDIX VIII EXAMINATIONS 0F THE RPV WELDS.

9.1 Examination volume coverage calculations are based upon the following suppositions:

a) To achieve full examination coverage nine different scans are required for a typical vessel weld or nozzle examination. The following may be used for other vessel configurations:

1) 0 degree (weld metal scan)
2) 45 degree Transverse-scan from vessel side of the weld
3) 45 degree Transverse-scan from nozzle side of the weld
4) 60 degree Transverse-scan from vessel side of the weld
5) 60 degree Transverse-scan from nozzle side of the weld
6) 45 degree Parallel-scan CW direction
7) 45 degree Parallel-scan CCW direction
8) 60 degree Parallel-scan CW direction
9) 60 degree Parallel-scan CCW direction

9.2 The examination volume achieved for each above examination scan shall be obtained and documented on a percentage basis. This calculation considers the required examination volume required per the ASME Section XI Code.

a) The total examination coverage may be calculated by averaging the exam volume coverage for all nine scans.

10.0 PDI Implementation for Piping Welds

10.1 Where examination from both sides is not possible, full coverage credit may be claimed from a single side for ferritic welds provided the examiner is qualified for single sided examination. Current technology is not capable of reliably detecting or sizing flaws on the far side of an austenitic weld for configurations common to US nuclear applications. Therefore, examination of austenitic material welds shall be performed from both sides or a scan limitation shall be documented.

10.2 The NDE Level III shall make an evaluation in the Weld Resolution document regarding total examination coverage (best effort) as calculated above in Section 7.0. In addition, a coverage evaluation which considers the PDI Implementation Guideline shall also be indicated in the Weld Resolution sheet. These two coverage evaluations shall be reported to the ISI Programs Engineer for incorporation into the Relief Request.

10.3 Typically a one-sided austenitic weld examination with no circumferential restrictions would be indicated as 75% examination coverage or 50% if circumferential scans were limited to one side.

NOTE: These requirements do not apply to augmented examinations of piping welds.

11.0 Responsibilities

11.1 The examiner or designee shall document the amount of code coverage obtained after all necessary steps to perform additional examinations has been completed in order to maximize coverage. The documentation shall become part of the examination weld data package.

11.2 The documentation may be reviewed by another individual with the same or higher NDE certification.

11.3 The NDE Level III or data reviewer may review the calculations in order to verify that the information is accurate and correct.

11.4 The NDE Level III may recalculate the examination coverage to obtain a more accurate value of the examination surface or volume examined. The calculation shall be documented on the exam report.

11.5 The NDE Level III may require an alternate examination technique or method, or request that the interference be removed. For nozzle examinations, supplemental scans from the nozzle bore or flange face may provide complete coverage of the weld.

11.6 If the examination coverage indicates less than 90 percent of the required examination volume or surface, the site ISI Program Engineer shall be notified.

11.7 The site ISI supervisor shall ensure that examination results are accurately documented and incorporate results into a Request for Relief if necessary.

PLP:RNM
Enclosures
cc (w/o Enclosures):
J. S. Adams, BR 3H-C
T. L. Adams, ADM 1V-WBN
R. J. Adney, LP 6A-C
J. A. Bailey, LP 6A-C
J. E. Baker, WTC G-WBN
L. S. Bryant, MOB 2R-WBN
M. J. Burzynski, BR 4X-C
M. H. Dunn, ET 10A-K
J. E. Maddox, EQB 1A-WBN w/enclosure
NSRB Support, LP 5M-C
L. V. Parscale, ADM 1B-WBN
J. A. Scalice, LP 6A-C
K. W. Singer, LP 6A-C
R. J. Vander Grift, EQB 2W-WBN
J. A. West, MOB 2R-WBN
Sequoyah Licensing Files, OPS 4C-SQN
EDMS, WT 3B-K w/enclosure

S:\SHARED\LROUSE\SUBMIT\RFR 1-ISI-07_1-ISI-12.RNM.doc