UNITED STATES
NUCLEAR REGULATORY COMMISSION
WASHINGTON, D.C. 20555-0001

February 23, 2001

LICENSEE: Nuclear Management Company (NMC), LLC

FACILITY: Prairie Island Nuclear Generating Plant, Units 1 and 2

SUBJECT: SUMMARY OF JANUARY 9, 2001, MEETING REGARDING THE APPLICATION FOR CONVERSION TO IMPROVED STANDARD TECHNICAL SPECIFICATIONS (TAC NO. MB0695 AND MB0696)

On January 9, 2001, the Nuclear Regulatory Commission (NRC) staff met with representatives from NMC (the licensee) at the NRC's headquarters in Rockville, Maryland. The purpose of the meeting was to discuss the licensee's recent application dated December 11, 2000, regarding the conversion to improved Technical Specifications (ITS) for Prairie Island Nuclear Generating Plant, Units 1 and 2. Meeting attendees are listed in Enclosure 1.

During the meeting, the licensee provided background information on the Prairie Island ITS Sections 3.3 and 3.8, Instrumentation and Electrical Power Systems, respectively. The background information focused on various plant-specific features relative to the instrumentation and the electrical power systems that are somewhat unique to Prairie Island. A copy of the licensee's handout during the meeting is enclosed (Enclosure 2).

All participants agreed that the meeting was very effective in exchanging detailed information needed for the review of the two subject sections. At the conclusion of the meeting, the NRC staff stated that an internal screening meeting was held on January 8, 2001, to determine whether the licensee's submittal was sufficiently complete for further reviews and it was concluded that the submittal was acceptable. The staff did, however, identify some submittal format and content issues that will provide a challenge to the staff during the review. The licensee agreed to assist the staff in finding ways to reduce these challenges.

The NRC staff also provided a draft review schedule (Enclosure 3) for the licensee's information and to solicit feedback from the licensee as to the viability of the proposed schedule. As indicated on the draft review schedule, the staff pointed out that additional information from the licensee would most likely be required after each staff reviewer performs a detailed review of the submittal.

Tae J. Kim, Senior Project Manager, Section 1
Project Directorate III
Division of Licensing Project Management
Office of Nuclear Reactor Regulation

Docket Nos. 50-282 and 50-306

Enclosures: 1. List of Attendees
2. Licensee Handout
3. Draft Reveiw Schedule

cc w/encls: See next page

NRC01

February 23, 2001

LICENSEE: Nuclear Management Company (NMC), LLC

FACILITY: Prairie Island Nuclear Generating Plant, Units 1 and 2

SUBJECT: SUMMARY OF JANUARY 9, 2001, MEETING REGARDING THE APPLICATION FOR CONVERSION TO IMPROVED STANDARD TECHNICAL SPECIFICATIONS (TAC NO. MB0695 AND MB0696)

On January 9, 2001, the Nuclear Regulatory Commission (NRC) staff met with representatives from NMC (the licensee) at the NRC's headquarters in Rockville, Maryland. The purpose of the meeting was to discuss the licensee's recent application dated December 11, 2000, regarding the conversion to improved Technical Specifications (ITS) for Prairie Island Nuclear Generating Plant, Units 1 and 2. Meeting attendees are listed in Enclosure 1.

During the meeting, the licensee provided background information on the Prairie Island ITS Sections 3.3 and 3.8, Instrumentation and Electrical Power Systems, respectively. The background information focused on various plant-specific features relative to the instrumentation and the electrical power systems that are somewhat unique to Prairie Island. A copy of the licensee's handout during the meeting is enclosed (Enclosure 2).

All participants agreed that the meeting was very effective in exchanging detailed information needed for the review of the two subject sections. At the conclusion of the meeting, the NRC staff stated that an internal screening meeting was held on January 8, 2001, to determine whether the licensee's submittal was sufficiently complete for further reviews and it was concluded that the submittal was acceptable. The staff did, however, identify some submittal format and content issues that will provide a challenge to the staff during the review. The licensee agreed to assist the staff in finding ways to reduce these challenges.

The NRC staff also provided a draft review schedule (Enclosure 3) for the licensee's information and to solicit feedback from the licensee as to the viability of the proposed schedule. As indicated on the draft review schedule, the staff pointed out that additional information from the licensee would most likely be required after each staff reviewer performs a detailed review of the submittal.

Tae J. Kim, Senior Project Manager, Section 1
Project Directorate III
Division of Licensing Project Management
Office of Nuclear Reactor Regulation

Docket Nos. 50-282 and 50-306

Enclosures: 1. List of Attendees
2. Licensee Handout
3. Draft Reveiw Schedule

cc w/encls: See next page

DISTRIBUTION:

| | | | |
|---|---|---|---|
| PUBLIC | CCraig | RLanksbury, RIII | HGarg |
| PDIII-1 Reading | TJKim | NGilles | TBergman |
| JZwolinski/SBlack | OGC | ETomlinson | |
| WBeckner | RBouling | CSchulter | |

| OFFICE | PDIII-1/PM | PDIII-1/LA | TSB | PDIII-1/SC |
|---|---|---|---|---|
| NAME | TJKim | RBouling | NGilles | CCraig |
| DATE | 2/15/01 | 2/13/01 | 2/22/01 | 2/23/01 |

DOCUMENT NAME: G:\PDIII-1\PRAIRIE\MTS01_09.wpd
OFFICIAL RECORD COPY

Prairie Island Nuclear Generating Plant,
Units 1 and 2

cc:

J. E. Silberg, Esquire
Shaw, Pittman, Potts and Trowbridge
2300 N Street, N. W.
Washington, DC 20037

Site Licensing Manager
Prairie Island Nuclear Generating Plant
Nuclear Management Company, LLC
1717 Wakonade Drive East
Welch, MN 55089

Adonis A. Neblett
Assistant Attorney General
Office of the Attorney General
455 Minnesota Street
Suite 900
St. Paul, MN 55101-2127

U.S. Nuclear Regulatory Commission
Resident Inspector's Office
1719 Wakonade Drive East
Welch, MN 55089-9642

Regional Administrator, Region III
U.S. Nuclear Regulatory Commission
801 Warrenville Road
Lisle, IL 60532-4351

Mr. Stephen Bloom, Administrator
Goodhue County Courthouse
Box 408
Red Wing, MN 55066-0408

Commissioner
Minnesota Department of Commerce
121 Seventh Place East
Suite 200
St. Paul, MN 55101-2145

Tribal Council
Prairie Island Indian Community
ATTN: Environmental Department
5636 Sturgeon Lake Road
Welch, MN 55089

Michael D. Wadley
Chief Nuclear Officer
Nuclear Management Company, LLC
700 First Street
Hudson, WI 54016

Nuclear Asset Manager
Xcel Energy, Inc.
414 Nicollet Mall
Minneapolis, MN 55401

Mr. Joel Sorensen
Site General Manager
Prairie Island Nuclear Generating Plant
Nuclear Management Company, LLC
1717 Wakonade Drive East
Welch, MN 55089

LIST OF ATTENDEES
JANUARY 9, 2001 MEETING
NUCLEAR MANAGEMENT COMPANY, PLC

| NAME | ORGANIZATION |
|---|---|
| N. Gilles | NRC |
| E. Tomlinson | NRC |
| C. Schulten | NRC |
| H. Garg | NRC |
| T. J. Kim | NRC |
| D. Vincent | NMC |
| J. Hoffman | NMC |
| K. J. Holmstrom | NMC |
| P. Hellen | NMC |
| G. Eckholt | NMC |
| S. Frost | NMC/Excel |

ENCLOSURE 1

# Prairie Island
# Improved Technical Specifications

Nuclear Regulatory Commission Staff/
Nuclear Management Company

Meeting

January 9, 2001

ENCLOSURE 2

# Nuclear Management Company Participants

- Gene Eckholt
- Steve Frost
- Paul Hellen
- Jim Hoffman
- Kevin Holmstrom
- Dale Vincent

# Meeting Goals

- Provide background on Section 3.3, Instrumentation
- Provide background on Section 3.8, Electrical Power Systems
- Discuss ITS Conversion LAR issues

# Prairie Island ITS Section 3.3 Major Topics

- ISTS Sections included in ITS
- Refueling Cycle
- AEC GDC, separation of RTS & ESFAS
- Relay logic vs SSPS
- Allowable Value - TSTF 355

# Prairie Island ITS Section 3.3 Major Topics (Cont'd)

- COT for low power NIS functions
- Specific RTS & ESFAS function design impact
- ESFAS logic testing
- Section 3.3.3 (PAM) items
- Load Sequencers in ITS Section 3.3.4 (Bus Voltage Instrumentation)

# Prairie Island ITS Section 3.3 Contents

- ISTS Sections retained in ITS:
  - 3.3.1
  - 3.3.2
  - 3.3.3
  - 3.3.5, as ITS Section 3.3.4
  - 3.3.6, as ITS Section 3.3.5

# Prairie Island ITS Section 3.3 Contents

- ISTS Sections not retained in ITS
  - 3.3.4, Remote Shutdown System - PI does not have a specific system. CTS does not include.
  - 3.3.7, CREFS and 3.3.8, FBACS - There is no uniquely identifiable logic to provide these functions.
  - 3.3.9, BDPS - PI does not have this system.

# Prairie Island ITS Section 3.3 Refueling Cycle

IPEEE 279
copy of NEC/GDCs

- PI plans on implementing a 24 month refueling cycle
- ITS proposed SR frequencies allow this

# Prairie Island ITS Section 3.3 RTS/ESFAS Distinction

- 1967 AEC GDC 14 prescribes requirements for core protection, to suppress transients
- 1967 AEC GDC 15 prescribes requirements for ESF, to mitigate accidents
- Minimal potential for protection channel/control system interaction relative to ESFAS functionality

# Prairie Island ITS Section 3.3 RTS/ESFAS Distinction (Cont'd)

- RTS relay logic and ESFAS relay logic are separate cabinets and circuitry
- Test circuitry, and test method, differs

# Prairie Island ITS Section 3.3 RTS/ESFAS Logic Nomenclature

- ISTS addresses Automatic Actuation Logic as logic modules (SSPS circuit boards), distinct from the output Actuation Relays
- ITS clarifies that Automatic Actuation Logic is entirely relay logic

# Prairie Island ITS Section 3.3 Logic Train Bypass Allowance

- ITS provides an allowance of 8 hours to be in bypass of an inoperable logic train, for testing
- Allowance based on time required to test relay logic, per WCAP 10271

ACTIONS (continued)

| CONDITION | REQUIRED ACTION | COMPLETION TIME |
|---|---|---|
| ~~O~~Q. One train inoperable. | ----------NOTE---------- One train may be bypassed for up to 8~~[4]~~ hours for surveillance testing provided the other train is OPERABLE. ---------- | CL3.3-161 |
| | ~~O~~Q.1 Restore train to OPERABLE status. | 6 hours |
| | OR | |
| | ~~O~~Q.2 Be in MODE 3. | 12 hours |

(continued)

ACTIONS (continued)

| CONDITION | REQUIRED ACTION | COMPLETION TIME |
|---|---|---|
| B. One channel or train inoperable. | B.1 Restore channel or train to OPERABLE status. | 48 hours |
| | OR | |
| | B.2.1 Be in MODE 3. | 54 hours |
| | AND | |
| | B.2.2 Be in MODE 5. | 84 hours |

(continued)

| | | |
|---|---|---|
| C. One train inoperable. | ~~C.1~~ ---------NOTE--------- One train may be bypassed for up to 8~~[4]~~ hours for surveillance testing provided the other train is OPERABLE. ---------- | PA3.3-153 CL3.3-221 |
| | C.1 Restore train to OPERABLE status. | 6 hours |
| | OR | |
| | C.2.1 Be in MODE 3. | 12 hours |
| | AND | |
| | C.2.2 Be in MODE 5. | 42 hours |

ACTIONS (continued)

| CONDITION | REQUIRED ACTION | COMPLETION TIME |
|---|---|---|
| ~~F. One channel or train inoperable.~~ | ~~F.1 Restore channel or train to OPERABLE status.~~ | ~~48 hours~~ CL3.3-223 |
| | ~~OR~~ | |
| | ~~F.2.1 Be in MODE 3.~~ | ~~54 hours~~ |
| | ~~AND~~ | |
| | ~~F.2.2 Be in MODE 4.~~ | ~~60 hours~~ |

(continued)

| | | |
|---|---|---|
| ~~F~~G. One train inoperable. | ~~G.1~~ --------NOTE--------- One train may be bypassed for up to 8~~[4]~~ hours for surveillance testing provided the other train is OPERABLE. --------- | PA3.3-153 CL3.3-224 |
| | ~~F.1~~ Restore train to OPERABLE status. | 6 hours |
| | OR | |
| | ~~F~~G.2.1 Be in MODE 3. | 12 hours |
| | AND | |
| | ~~F~~G.2.2 Be in MODE 4. | 18 hours |

# Prairie Island ITS Section 3.3 Allowable Values

- PI ITS incorporates approved travelers TSTF 355 and 365
- Presents single column Allowable Value (AV) format
- CTS provides LSSS and ESF Limiting Setpoints
- Conversion to current industry setpoint methodology in coincidence with ITS conversion. AV Results incorporated in ITS submittal.

# Prairie Island ITS Section 3.3 Allowable Values (Cont'd)

- Most values are the same as the LSSS or ESF Limiting Setpoints provided in CTS
- A few; eg, the various Pressurizer Pressure setpoints, provide more actual setpoint and operating margin
- NIS PR Positive Rate Trip reduced to allow use of this trip in RCCA withdrawal from low power event analyses
- P9 value reduced to represent current operating practice

## 2.3 LIMITING SAFETY SYSTEM SETTINGS, PROTECTIVE INSTRUMENTATION

~~Applicability~~

~~Applies to trip settings for instruments monitoring reactor power and reactor coolant pressure, temperature, flow, and pressurizer level.~~ A3.3-01

~~Objective~~

~~To provide for automatic protective action in the event that the principal process variables approach a safety limit.~~

Specification

A. Protective instrumentation settings for reactor trip shall be as follows:

1. Startup protection

Tbl 3.3.1-1 Function 4 — a. High flux, intermediate range (high set point) - current equivalent to ≤40% of RATED THERMAL POWER.

Tbl 3.3.1-1 Function 2b — b. High flux, power range (low set point) - ≤40% of RATED THERMAL POWER.

Tbl 3.3.1-1 Function 5 — c. High flux, source range - neutron flux $\leq 10^6$ counts/second.

2. Core protection

Tbl 3.3.1-1 Function 2a — a. High flux, power range (high set point) - ≤ 110~~108~~% of RATED THERMAL POWER. L3.3-31

Tbl 3.3.1-1 Function 8b — b. High pressurizer pressure - ≤2400~~2385~~ psig. L3.3-31

Tbl 3.3.1-1 Function 8a — c. Low pressurizer pressure - ≥1760~~1815~~ psig. L3.3-31

Tbl 3.3.1-1 Function 6 and Note 1 — d. Overtemperature ΔT

$$\Delta T_t \leq \Delta T_o \left[K_1 - K_2 (T-T') \left(\frac{1+t_1 s}{1+t_2 s}\right) + K_3 (P-P') - f(\Delta I)\right]$$

where

$\Delta T_o$ = Indicated ΔT at RATED THERMAL POWER
T = Average temperature, °F
T' = 567.3°F
P = Pressurizer pressure, psig
P' = psig 2235
$K_1$ ≤ 1.11
$K_2$ = 0.0090
$K_3$ = 0.000566
$t_1$ = 30 sec
$t_2$ = 4 sec

Tbl 3.3.1-1 Function 12
Tbl 3.3.2-1 Function 6d

2.3.A.2.g. Reactor coolant pump bus undervoltage - ≥76~~75~~% of normal voltage L3.3-31

Tbl 3.3.1-1 Function 11a

h. Open reactor coolant pump motor breaker.

Tbl 3.3.1-1 Function 11b

Reactor coolant pump bus underfrequency - ≥58.2 Hz

i. Power range neutron flux rate.

Tbl 3.3.1-1 Function 3a

1. Positive rate - ≤6~~15~~% of RATED THERMAL POWER with a time constant ≥2 seconds L3.3-31

Tbl 3.3.1-1 Function 3b

2. Negative rate - ≤8~~7~~% of RATED THERMAL POWER with a time constant ≥2 seconds L3.3-31

3. Other reactor trips

Tbl 3.3.1-1 Function 9

a. High pressurizer water level - ≤90% of narrow range instrument span.

Tbl 3.3.1-1 Function 13
Tbl 3.3.2-1 Function 6b

b. Low-low steam generator water level - ≥5% of narrow range instrument span.

c. Turbine Generator trip

Tbl 3.3.1-1 Function 14b

1. Turbine stop valve indicators - closed

Tbl 3.3.1-1 Function 14a

2. Low auto stop oil pressure - ≥45 psig

~~d. Safety injection - See Specification 3.5~~ A3.3-02

2.3.B. Protective instrumentation settings for reactor trip interlocks shall be as follows:

1. P-6 Interlock:

Tbl 3.3.1-1 Function 16a

Source range high flux trip shall be ~~un~~blocked whenever intermediate range neutron flux is ≤$10^{-10}$ amperes. A3.3-28

2. P-7 Interlock:

"At power" reactor trips that are blocked at low power (low pressurizer pressure, high pressurizer level, and loss of flow for one or two loops) shall be ~~un~~blocked whenever: A3.3-28

Tbl 3.3.1-1 Function 16b.1

a. Power range neutron flux is ≥12% of RATED THERMAL POWER or,

Tbl 3.3.1-1 Function 16b.2

b. Turbine load is ≥~~10%~~ of full load turbine impulse pressure L3.3-31 A3.3-28

3. P-8 Interlock:

Tbl 3.3.1-1 Function 16c

Low power block of single loop loss of flow is permitted whenever power range neutron flux is ≤~~10%~~ of RATED THERMAL POWER. L3.3-31

4. P-9 Interlock:

Tbl 3.3.1-1 Function 16d

Reactor trip on turbine trip shall be ~~un~~blocked whenever power range neutron flux is ≥~~50%~~ of RATED THERMAL POWER. L3.3-31 A3.3-28

5. P-10 Interlock:

Tbl 3.3.1-1 Function 16e

Power range high flux low setpoint trip and intermediate range high flux trip shall be ~~un~~blocked whenever power range neutron flux is ≤9% of RATED THERMAL POWER. A3.3-28

~~C. Control Rod Withdrawal Stops~~ LR3.3-03

~~1. Block automatic rod withdrawal:~~

~~a. P-2 Interlock:~~

~~Turbine load ≤15% of full load turbine impulse pressure.~~

# Prairie Island ITS Section 3.3.1 Source, Intermediate and Power Range Shutdown COT

- CTS requires test prior to startup

SURVEILLANCE REQUIREMENTS (continued)

| SURVEILLANCE | | FREQUENCY |
|---|---|---|
| SR 3.3.1.8 | ----------NOTE----------<br>This Surveillance shall include verification that interlocks P-6 and P-10 are in their required state for existing unit conditions.<br>----------<br><br>Perform COT. | -----NOTE-----<br>Only required when not performed within previous ~~[~~92~~]~~ days<br>----------<br><br>Prior to reactor startup CL3.3-166<br><br>AND<br><br>~~Four hours after reducing power below P-10 for power and intermediate instrumentation~~<br><br>~~AND~~<br><br>~~Four hours after reducing power below P-6 for source range instrumentation~~<br><br>~~AND~~<br><br>Eve PA3.3-171 ry 92 days ~~thereafter~~ when the unit is in MODES 3, 4 and 5 |

# Prairie Island ITS Section 3.3.1 RCP Underfrequency Function

- ITS includes the UF function as a subset of the loss of RCP function.

Table 3.3.1-1 (page 4 of 8)
Reactor Trip System Instrumentation

| FUNCTION | APPLICABLE MODES OR OTHER SPECIFIED CONDITIONS | REQUIRED CHANNELS | CONDITIONS | SURVEILLANCE REQUIREMENTS | ALLOWABLE VALUE | TA3.3-176 ~~TRIP SETPOINT~~[a] |
|---|---|---|---|---|---|---|
| 11. Loss of Reactor Coolant Pump (RCP) ~~Breaker Position~~ CL3.3-195 | | | | | | |
| a. RCP Breaker Open~~Single Loop~~ | 1[fh] | 1 per RCP | ~~M~~ | SR 3.3.1.14 | NA | ~~NA~~ |
| b. Underfrequency Buses 11 and 12 (21 and 22)~~Two Loops~~[g] CL3.3-196 | 1[fi] | 2 per bus~~1 per RCP~~ | CL3.3-156 LM | SR 3.3.1.9<br>SR 3.3.1.10<br>~~SR 3.3.1.14~~ | CL3.3-197 ≥ 58.2 Hz~~NA~~ | ~~NA~~ |
| 12. Undervoltage on Buses 11 and 12 (21 and 22) ~~RCPs~~ CL3.3-201 | 1[eg] | CL3.3-202 2~~[3]~~ per bus | CL3.3-156 LM | SR 3.3.1.9<br>SR 3.3.1.10<br>CL3.3-186<br>~~SR 3.3.1.16~~ | X3.3-177 ≥ 76% bus voltage~~[4760] V~~ | ~~≥ [4830] V~~ |
| ~~13. Underfrequency RCPs~~ CL3.3-195 | ~~1[g]~~ | ~~[3] per bus~~ | ~~M~~ | ~~SR 3.3.1.9~~<br>~~SR 3.3.1.10~~<br>~~SR 3.3.1.16~~ | ~~≥ [57.1] Hz~~ | ~~≥ [57.5] Hz~~ |
| 134. Steam Generator (SG) Water Level - Low Low | 1,2 | ~~[~~34 per SG~~]~~ | E | SR 3.3.1.1<br>SR 3.3.1.7<br>SR 3.3.1.10<br>CL3.3-186<br>~~SR 3.3.1.16~~ | CL3.3-203 ≥ 5~~[30.4]~~% | ~~≥ [32.3]~~% |
| ~~15. SG Water Level - Low~~ | ~~1,2~~ | ~~2 per SG~~ | ~~E~~ | ~~SR 3.3.1.1~~<br>~~SR 3.3.1.7~~<br>~~SR 3.3.1.10~~<br>~~SR 3.3.1.16~~ | CL3.3-204 ~~≥ [30.4]~~% | ~~≥ [32.3]~~% |
| ~~Coincident with Steam Flow/Feedwater Flow Mismatch~~ | ~~1,2~~ | ~~2 per SG~~ | ~~E~~ | ~~SR 3.3.1.1~~<br>~~SR 3.3.1.7~~<br>~~SR 3.3.1.10~~<br>~~SR 3.3.1.16~~ | ~~≤ [42.5]% full steam flow at RTP~~ | ~~≤ [40]% full steam flow at RTP~~ |

(continued)

~~(a) Reviewer's Note: Unit specific implementations may contain only Allowable Value depending on Setpoint Study methodology used by the unit.~~ TA3.3-176

(~~e~~g) Above the P-7 (Low Power Reactor Trips Block) interlock.

TABLE TS.3.5-2A (Page 3 of 6)

REACTOR TRIP SYSTEM INSTRUMENTATION

| | | FUNCTIONAL UNIT | REQUIRED ~~TOTAL NO. OF~~ CHANNELS | ~~CHANNELS TO TRIP~~ | ~~MINIMUM CHANNELS OPERABLE~~ | APPLICABLE MODES | ACTION |
|---|---|---|---|---|---|---|---|
| Table 3.3.1-1 Funct 11 | 16. | Loss of Reactor Coolant Pump | | | | | L3.3-13 |
| | | a. RCP Breaker Open | 1/pump | ~~1~~ | ~~1/pump~~ | 1(f) | M~~1~~ |
| | | b. Underfrequency 4kV bus(g) | 2/bus | ~~1/bus on both buses~~ | ~~2 on one bus~~ | 1(f) | ~~I11~~ |
| Table 3.3.1-1 Funct 15 | 17. | Safety Injection Input from ESF | 2 | ~~1~~ | ~~2~~ | 1, 2 | O~~7~~ |
| | | | | | | | A3.3-19 |
| Table 3.3.1-1 Funct 19 | 18. | Automatic Trip ~~& Interlock~~ Logic | 2<br>2 | ~~1~~<br>~~1~~ | ~~2~~<br>~~2~~ | 1, 2<br>3(a), 4(a), 5(a) | O~~7~~<br>C~~8~~ |
| | | | | | | | A3.3-14 |
| Table 3.3.1-1 Funct 17 | 19. | Reactor Trip Breakers(d) | 2<br>2 | ~~1~~<br>~~1~~ | ~~2~~<br>~~2~~ | 1, 2<br>3(a), 4(a), 5(a) | P~~9~~<br>C~~8~~ |
| | ~~20.~~ | ~~Reactor Trip Bypass Breakers~~ | ~~2~~ | ~~1~~ | ~~1~~ | ~~(d)~~ | ~~10~~ |
| | | | | | | | A3.3-14 |
| | | | | | | | M3.3-15 |
| Table 3.3.1-1 Funct 16 | 16. | Reactor Trip System Interlocks | | | | | |
| | | a. P-6 | 2 | | | 2(c) | Q |

~~TABLE TS.3.5-2A~~
~~Page 3 of 6~~
~~Rev 111 8/10/94~~

# Prairie Island ITS Section 3.3.1
# P7

- PI design pre-dates use of the P13 terminology
- Turbine impulse pressure input included with P7
- P7 function in ISTS is logic only
- P7 function in ITS includes input instrumentation, Conditions and SR's similar to other permissives

Table 3.3.1-1 (page 5 of 8)
Reactor Trip System Instrumentation

| FUNCTION | APPLICABLE MODES OR OTHER SPECIFIED CONDITIONS | REQUIRED CHANNELS | CONDITIONS | SURVEILLANCE REQUIREMENTS | ALLOWABLE VALUE | TA3.3-176 ~~TRIP SETPOINT~~ ~~(a)~~ |
|---|---|---|---|---|---|---|
| 146. Turbine Trip | | | | | | |
| a. Low PA3.3-205 ~~Autostop Fluid~~ Oil Pressure | 1 ~~(hj)~~ | 3 | ~~NP~~ | SR 3.3.1.10<br>SR 3.3.1.15 | CL3.3-206<br>≥ 45 ~~[750]~~ psig | ~~≥ [800]~~ ~~psig~~ |
| b. Turbine Stop Valve Closure | 1 ~~(hj)~~ | ~~24~~ | CL3.3-167<br>~~NP~~ | CL3.3-207<br>~~SR 3.3.1.10~~<br>SR 3.3.1.15 | NA ~~≥ [1]%~~ ~~open~~ | ~~≥ [1]% open~~ |
| 157. Safety Injection (SI) Input from Engineered Safety Feature Actuation System (ESFAS) | 1,2 | 2 trains | ~~OQ~~ | SR 3.3.1.14 | NA | ~~NA~~ |
| 168. Reactor Trip System Interlocks | | | | | | |
| a. Intermediate Range Neutron Flux, P-6 | 2 ~~(de)~~ | 2 | ~~QS~~ | SR 3.3.1.11<br>SR 3.3.1.13 | CL3.3-211<br>≥ 1.0E-10 ~~[6E-11]~~ amp | ~~≥ [1E-10]~~ amp |
| b. Low Power Reactor Trips Block, P-7 | | | | | | |
| 1. Power Range Neutron Flux | 1 | ~~41 per train~~ | ~~RT~~ | SR 3.3.1.11<br>SR 3.3.1.13 | ≤ 12% RTP ~~NA~~ | NA<br>CL3.3-212 |
| 2. Turbine Impulse Pressure | 1 | 2 | R | SR 3.3.1.10<br>SR 3.3.1.13 | X3.3-177<br>≤ 12% Full Load | |
| c. Power Range Neutron Flux, P-8 | 1 | 4 | ~~RT~~ | SR 3.3.1.11<br>SR 3.3.1.13 | X3.3-177<br>≤ 11 ~~[50.2]~~% RTP | ~~≤ [48]% RTP~~ |
| d. Power Range Neutron Flux, P-9 | 1 | 4 | ~~RT~~ | SR 3.3.1.11<br>SR 3.3.1.13 | X3.3-177<br>≤ 12 ~~[52.2]~~% RTP | ~~≤ [50]% RTP~~ |
| e. Power Range Neutron Flux, P-10 | 1,2 | 4 | ~~QS~~ | SR 3.3.1.11<br>SR 3.3.1.13 | ≥ 9 ~~[7.8]~~% RTP ~~and~~ ~~≤ [12.2]%~~ ~~RTP~~ | ~~≥ [10]% RTP~~ |
| ~~f. Turbine Impulse Pressure, P-13~~ | ~~1~~ | ~~2~~ | ~~T~~ | ~~[SR 3.3.1.1]~~<br>~~SR 3.3.1.10~~<br>~~SR 3.3.1.13~~ | ~~≤ [12.2]%~~ ~~turbine power~~ | CL3.3-213<br>~~≤ [10]%~~ ~~turbine power~~ |

# Prairie Island ITS Section 3.3.1 P7 and P8 Power Levels

- PI design prescribes P8 at essentially the same power level as P7
- P7 is specified at slightly higher power level to allow P10 setting
- There is no operating region that is above P7 and below P8

ACTIONS (continued)

| CONDITION | REQUIRED ACTION | COMPLETION TIME |
|---|---|---|
| ~~K~~M. One channel inoperable. | ----------NOTE---------- The inoperable channel may be bypassed for up to 4 hours for surveillance testing of other channels. ---------- | |
| | ~~K~~M.1 Place channel in trip. | 6 hours |
| | OR | CL3.3-158 |
| | ~~K~~M.2 Reduce THERMAL POWER to < P-7 and P-8. | 12 hours |

(continued)

| | | |
|---|---|---|
| ~~L~~N. One or bothReactor ~~Coolant Flow - Low (Single Loop)~~ channel(s) inoperable on one bus. | ----------NOTE---------- One~~The~~ inoperable channel may be bypassed for up to 4 hours for surveillance testing of other channels. ---------- | TA3.3-155<br>CL3.3-156 |
| | ~~L~~N.1 Place channel(s) in trip. | 6 hours |
| | OR | |
| | ~~L~~N.2 Reduce THERMAL POWER to < P-7 and P-8. | CL3.3-158<br>12~~0~~ hours |

ACTIONS (continued)

| CONDITION | REQUIRED ACTION | COMPLETION TIME |
|---|---|---|
| M~~O~~. One Reactor Coolant Pump Breaker Position channel inoperable. | ~~NOTE~~<br>~~The inoperable channel may be bypassed for up to 4 hours for surveillance testing of other channels.~~ | CL3.3-157 |
| | M~~O~~.1 Restore channel to OPERABLE status. | 48~~6~~ hours |
| | OR | |
| | M~~O~~.2 Reduce THERMAL POWER to < P-7 and P-8. | CL3.3-158<br>54~~10~~ hours |

(continued)

| | | |
|---|---|---|
| N~~P~~. One Turbine Trip channel inoperable. | NOTE<br>The inoperable channel may be bypassed for up to 4 hours for surveillance testing of other channel(s). | |
| | N~~P~~.1 Place channel in trip. | 6 hours |
| | OR | |
| | N~~P~~.2 Reduce THERMAL POWER to < ~~[~~P-9~~]~~. | 12~~0~~ hours CL3.3-169 |

# Prairie Island ITS Section 3.3.1 Equalities in Notes 1 & 2

- ITS retains OTΔT and OPΔT setpoint equations, equal signs and inequalities per CTS
- Overall uncertainty margin is provided by the equation and the bias term, consistent with analysis and methodology

Table 3.3.1-1 (page 7 of 8)
Reactor Trip System Instrumentation

Note 1: Overtemperature ΔT

The Overtemperature ΔT Function Allowable Value is defined by ~~shall not exceed~~ the following Trip Setpoint ~~by more than [3.8]% of ΔT span~~.
~~Delete NUREG-1431 equation:~~

$$\cancel{\Delta T \frac{(1+\tau_1 s)}{(1+\tau_2 s)}\left(\frac{1}{1+\tau_3 s}\right) \le \Delta T_o \left\{ K_1 - K_2 \frac{(1+\tau_4 s)}{(1+\tau_5 s)}\left[T - \frac{1}{(1+\tau_6 s)} T'\right] + K_3 (P - P') - f_1(\Delta I)\right\}}$$

~~Insert CTS equation:~~

$$\Delta T \le \Delta T_o \left\{ K_1 - K_2 (T - T') \left[\frac{(1+\tau_1 s)}{(1+\tau_2 s)}\right] + K_3 (P - P') - f(\Delta I)\right\}$$ CL3.3-214

Where: ΔT is measured Reactor Coolant System (RCS) ΔT, °F.
$\Delta T_0$ is the indicated ΔT at RTP, °F.
s is the Laplace transform operator, $sec^{-1}$.
T is the measured RCS average temperature, °F.
T' is the nominal $T_{avg}$ at RTP, ~~≤~~ 567.3~~[588]~~°F.

P is the measured pressurizer pressure, psig
P' is the nominal RCS operating pressure, ~~≤~~ ~~[~~2235~~]~~ psig

CL3.3-215

$K_1$ ≤ 1.11~~[1.09]~~ $K_2$ ~~≥~~ ~~[~~0.009~~138]~~/°F $K_3$ = ~~[~~0.00056~~671]~~/psig
$\tau_1$ ~~≥~~ 30~~[ 8 ]~~ sec $\tau_2$ ~~≤~~ 4~~[ 3 ]~~ sec ~~$\tau_3$ ≤ [ 2 ] sec~~ CL3.3-214
~~$\tau_4$ ≥ [ 33 ] sec $\tau_5$ ≤ [ 4 ] sec $\tau_6$ ≤ [ 2 ] sec~~

f(ΔI) = 0.0150~~1.26~~{12~~35~~ + ($q_t$ - $q_b$)}when $q_t$ - $q_b$ ≤ - 12~~[35]~~% RTP
0% of RTP when -12~~[35]~~% RTP < $q_t$ - $q_b$ ≤ 9~~[7]~~% RTP CL3.3-214
0.0250~~-1.05~~{($q_t$ - $q_b$) - 9~~7~~}when $q_t$ - $q_b$ > 9~~[7]~~% RTP

Where $q_t$ and $q_b$ are percent RTP in the upper and lower halves of the core, respectively, and $q_t$ + $q_b$ is the total THERMAL POWER in percent RTP.

Table 3.3.1-1 (page 8 of 8)
Reactor Trip System Instrumentation

Note 2: Overpower ΔT

The Overpower ΔT Function Allowable Value is defined by ~~shall not exceed~~ the following Trip Setpoint ~~by more than [3]% of ΔT span~~.
~~Delete NUREG-1431 equation:~~

$$\cancel{\frac{(1+\tau_1 s)}{(1+\tau_2 s)}\left(\frac{1}{1+\tau_3 s}\right) \le \Delta T_0 \left\{ K_4 - K_5 \frac{\tau_7 s}{1+\tau_7 s}\left(\frac{1}{1+\tau_6 s}\right) T - K_6 \left[ T \frac{1}{1+\tau_6 s} - T'' \right] - f_2(\Delta I \right.}$$

~~Insert CTS equation:~~

$$\Delta T \le \Delta T_0 \left\{ K_4 - K_5 \frac{\tau_3 s T}{1+\tau_3 s} - K_6 (T - T') - f(\Delta I) \right\}$$ CL3.3-214

Where: ΔT is measured RCS ΔT, °F.
$\Delta T_0$ is the indicated ΔT at RTP, °F.
s is the Laplace transform operator, $sec^{-1}$.
T is the measured RCS average temperature, °F. CL3.3-215
T' is the nominal $T_{avg}$ at RTP, ~~=~~ ≤ 567.3~~[588]~~°F.

$K_4$ ≤ ~~[1.109]~~
$K_5$ ~~=~~ ≥ ~~[0.0275]~~/°F for increasing $T_{avg}$
~~[0]~~/°F for decreasing $T_{avg}$
$K_6$ ~~=~~ ≥ ~~[0.00128]~~/°F when T > T'
~~[0]~~/°F when T ≤ T'
~~$\tau_1$ ≥ [8] sec $\tau_2$ ≤ [3] sec~~ $\tau_3$ ~~=~~ ≤ 10~~[2]~~ sec
~~$\tau_6$ ≤ [2] sec $\tau_7$ ≥ [10] sec~~

CL3.3-214

f(ΔI) = As defined in Note 1 ~~0% RTP for all ΔI.~~

# Prairie Island ITS Section 3.3.2 Containment Spray Logic

- Logic is 1 out of 2, 3 times
- CTS Action allows placing channels in trip
- ISTS Action allowed channel to be bypassed
- ISTS Actions revised to place first channel in trip, second channel in bypass

CONTAINMENT PRESSURE

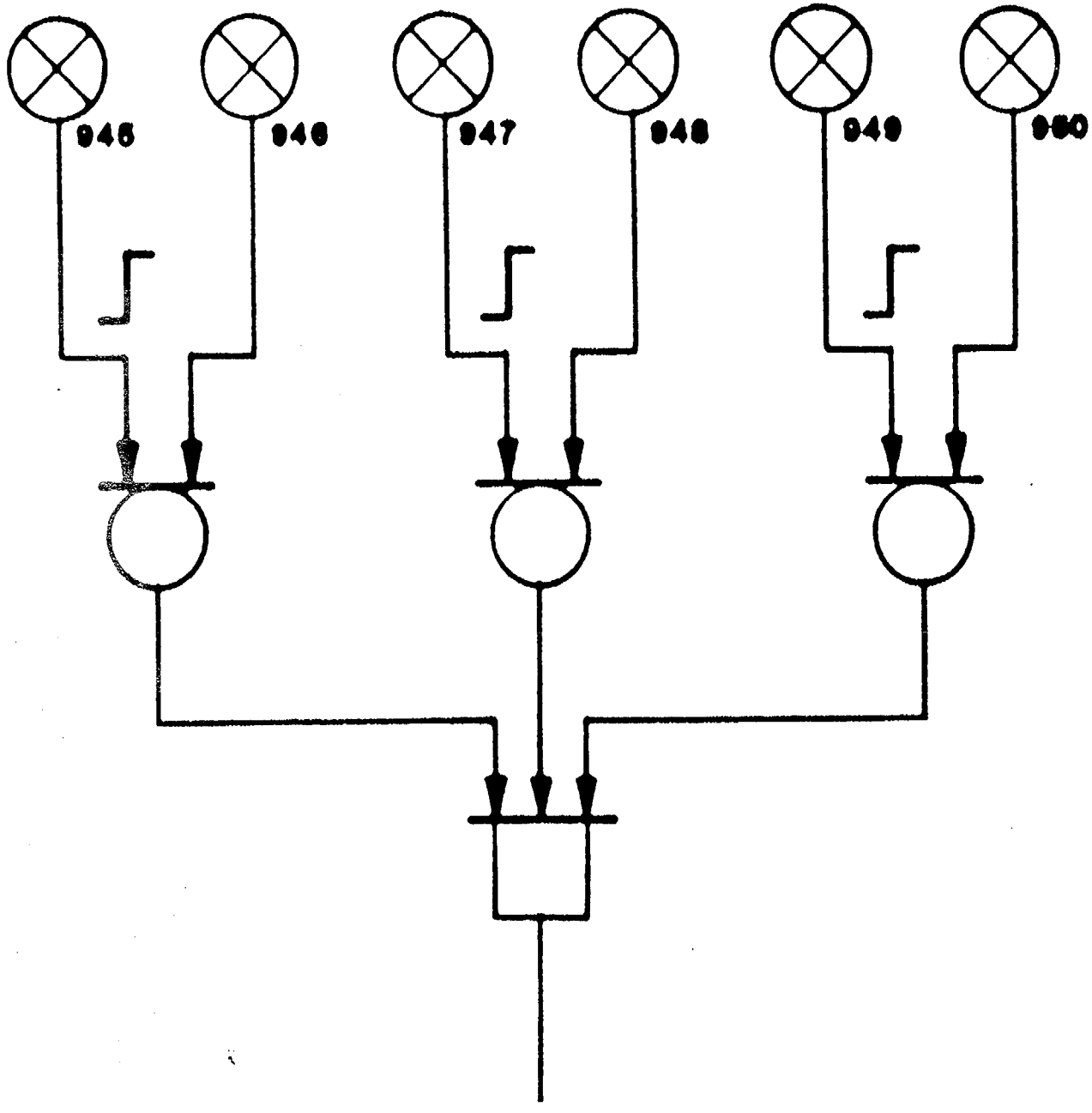

ACTIONS (continued)

| CONDITION | REQUIRED ACTION | COMPLETION TIME |
|---|---|---|
| E. ~~Two~~ ~~One~~ Containment Pressure channel~~s~~ inoperable. | ~~E.1~~ ---------NOTE--------- ~~The tripped~~~~One~~ ~~additional~~ channel may be bypassed for up to ~~[~~4~~]~~ hours for surveillance testing. --- | PA3.3-153<br>CL3.3-222 |
| | E.1.1 Verify one channel tripped per Required Action D.1. | Immediately |
| | AND | |
| | E.1.2 Place the other channel in bypass. | 6 hours |
| | OR | |
| | E.2.1 Be in MODE 3. | 12 hours |
| | AND | |
| | E.2.2 Be in MODE 4. | 18 hours |

Table 3.3.2-1 (page 2 of 8)
Engineered Safety Feature Actuation System Instrumentation

| FUNCTION | APPLICABLE MODES OR OTHER SPECIFIED CONDITIONS | REQUIRED CHANNELS | CONDITIONS | SURVEILLANCE REQUIREMENTS | ALLOWABLE VALUE | TA3.3-176 ~~TRIP SETPOINT~~ ~~(a)~~ |
|---|---|---|---|---|---|---|
| ~~1. Safety Injection (continued)~~ | | | | | | |
| ~~g. High Steam Flow in Two Steam Lines~~ | ~~1,2,3~~ ~~(d)~~ | ~~2 per steam line~~ | ~~D~~ | ~~SR 3.3.2.1~~<br>~~SR 3.3.2.5~~<br>~~SR 3.3.2.9~~<br>~~SR 3.3.2.10~~ | CL3.3-244<br>~~(e)~~ | ~~(f)~~ |
| ~~Coincident with Steam Line Pressure ▒ Low~~ | ~~1,2,3~~ ~~(d)~~ | ~~1 per steam line~~ | ~~D~~ | ~~SR 3.3.2.1~~<br>~~SR 3.3.2.5~~<br>~~SR 3.3.2.9~~<br>~~SR 3.3.2.10~~ | ~~≥ [635]~~ ~~(c)~~ ~~psig~~ | ~~≥ [675] psig~~ |
| 2. Containment Spray | | | | | | |
| a. Manual Initiation | 1,2,3,4 | CL3.3-246<br>2 ~~per train, 2 trains~~ | B | SR 3.3.2.4~~8~~ | NA | ~~NA~~ |
| b. Automatic Actuation Relay Logic ~~and Actuation Relays~~ CL3.3-238 | 1,2,3,4 | 2 trains | C | SR 3.3.2.2<br>CL3.3-233<br>~~SR 3.3.2.4~~<br>~~SR 3.3.2.6~~ | NA | ~~NA~~ |
| c. High-High Containment Pressure | | | | | | |
| ~~High ▒ 3 (High-High)~~ | ~~1,2,3~~ | ~~4~~ | ~~E~~ | ~~SR 3.3.2.1~~<br>~~SR 3.3.2.5~~<br>~~SR 3.3.2.9~~<br>~~SR 3.3.2.10~~ | CL3.3-247<br>~~≤ [12.31]~~ ~~psig~~ | ~~≤ [12.05]~~ ~~psig~~ |
| ~~High ▒ 3 (Two Loop Plants)~~ | 1,2,3 | ~~[3]~~ sets of ~~[2]~~ | D~~,~~E<br>CL3.3-222 | SR 3.3.2.1<br>SR 3.3.2.3~~5~~<br>SR 3.3.2.6~~9~~<br>CL3.3-237<br>~~SR 3.3.2.10~~ | ≤ 23~~[12.31]~~ psig | ~~≤ [12.05]~~ ~~psig~~ |

(continued)

~~(a) Reviewer's Note: Unit specific implementations may contain only Allowable Value depending on Setpoint Study methodology used by the unit.~~ TA3.3-176

~~(c) Time constants used in the lead/lag controller are $t_1 \geq$ [50] seconds and $t_2 \leq$ [5] seconds.~~ Not used on this page

~~(d) Above the P-12 ($T_{avg}$ ▒ Low Low) interlock.~~

~~(e) Less than or equal to a function defined as ΔP corresponding to [44]% full steam flow below [20]% load, and ΔP increasing linearly from [44]% full steam flow at [20]% load to [114]% full steam flow at [100]% load, and ΔP corresponding to [114]% full steam flow above 100% load.~~ CL3.3-244

~~(f) Less than or equal to a function defined as ΔP corresponding to [40]% full steam flow between [0]% and [20]%~~

# Prairie Island ITS Section 3.3.2 Direct Equipment Actuation Functions

- Examples
  - AFW start
  - Manual main steam isolation
- ITS includes specific condition for inoperability of certain AFW automatic start functions, with action to apply the AFW system condition immediately
- ITS Condition 3.7.2 C requires closure of MSIV as final action

ACTIONS (continued)

| CONDITION | REQUIRED ACTION | COMPLETION TIME |
|---|---|---|
| ~~H~~J. One ~~or both~~~~Main Feedwater Pumps trip~~ channel(s) inoperable ~~on one bus~~. | ~~NOTE~~<br>One inoperable channel may be bypassed for up to 4 hours for surveillance testing of other channels.<br>~~NOTE~~<br>~~H~~J.1 Place channel(s) in trip~~Restore channel to OPERABLE status~~.<br><br>OR<br><br>~~H~~J.2 Be in MODE 3. | CL3.3-226<br><br>~~6~~48 hours<br><br><br>~~12~~54 hours |
| ~~I~~K. One channel ~~or~~ train inoperable. | ~~I~~K.1 ~~NOTE~~<br>~~One additional channel may be bypassed for up to [4] hours for surveillance testing.~~<br><br>Enter applicable Condition(s) and Required Action(s) of Specification 3.7.5 for the associated Auxiliary Feedwater (AFW) train~~Place channel in bypass.~~<br><br>~~OR~~ | CL3.3-227<br><br>Immediately<br>~~6 hours~~<br><br>(continued) |

Table 3.3.2-1 (page 3 of 8)
Engineered Safety Feature Actuation System Instrumentation

| FUNCTION | APPLICABLE MODES OR OTHER SPECIFIED CONDITIONS | REQUIRED CHANNELS | CONDITIONS | SURVEILLANCE REQUIREMENTS | ALLOWABLE VALUE | TA3.3-176 ~~TRIP SETPOINT~~ ~~(a)~~ |
|---|---|---|---|---|---|---|
| 3. Containment Isolation | | | | | | |
| ~~a. Phase A Isolation~~ | | | | | | |
| a. ~~(1)~~ Manual Initiation | 1,2,3,4 | 2 | B | SR 3.3.2.~~4~~8 | NA | ~~NA~~ |
| b. ~~(2)~~ Automatic CL3.3-238 Actuation Relay Logic ~~and Actuation Relays~~ | 1,2,3,4 | 2 trains | C | SR 3.3.2.2<br>CL3.3-233<br>~~SR 3.3.2.4~~<br>~~SR 3.3.2.6~~ | NA | ~~NA~~ |
| c. ~~(3)~~ Safety Injection | Refer to Function 1 (Safety Injection) for all initiation functions and requirements. | | | | | |
| ~~b. Phase B Isolation~~ | | | | | | |
| ~~(1) Manual Initiation~~ | ~~1,2,3,4~~ | ~~2 per train, 2 trains~~ | ~~B~~ | ~~SR 3.3.2.8~~ | CL3.3-252<br>~~NA~~ | ~~NA~~ |
| ~~(2) Automatic Actuation Logic and Actuation Relays~~ | ~~1,2,3,4~~ | ~~2 trains~~ | ~~C~~ | ~~SR 3.3.2.2~~<br>~~SR 3.3.2.4~~<br>~~SR 3.3.2.6~~ | ~~NA~~ | ~~NA~~ |
| ~~(3) Containment Pressure~~ | | | | | | |
| ~~High 3 (High High)~~ | ~~1,2,3~~ | ~~(4)~~ | ~~E~~ | ~~SR 3.3.2.1~~<br>~~SR 3.3.2.5~~<br>~~SR 3.3.2.9~~<br>~~SR 3.3.2.10~~ | ~~≤ (12.31)~~ ~~psig~~ | ~~≤ (12.05)~~ ~~psig~~ |
| 4. Steam Line Isolation | | | | | | |
| ~~a. Manual Initiation~~ | ~~1,2(i), 3(i)~~ | ~~2~~ | ~~F~~ | ~~SR 3.3.2.8~~ | ~~NA~~ | CL3.3-223<br>~~NA~~ |

Table 3.3.2-1 (page 6 of 8)
Engineered Safety Feature Actuation System Instrumentation

| FUNCTION | APPLICABLE MODES OR OTHER SPECIFIED CONDITIONS | REQUIRED CHANNELS | CONDITIONS | SURVEILLANCE REQUIREMENTS | ALLOWABLE VALUE | TA3.3-176 ~~TRIP SETPOINT(a)~~ |
|---|---|---|---|---|---|---|
| 5. ~~Turbine Trip and~~ CL3.3-257 Feedwater Isolation | 1,2~~(e)~~, ~~3~~(e) | 2 trains | CL3.3-225 ~~F H G~~ | SR 3.3.2.2 CL3.3-233 ~~SR 3.3.2.4~~ ~~SR 3.3.2.6~~ | NA | ~~NA~~ |
| a. Automatic Actuation Relay Logic ~~and Actuation Relays~~ CL3.3-238 | | | | | | |
| b. ~~High-~~ High Steam Generator (SG) Water Level ~~High High (P-14)~~ CL3.3-241 | 1,2~~(e)~~, CL3.3-258 ~~3~~(j) | ~~3~~ per SG | CL3.3-225 ~~G D~~ | SR 3.3.2.1 SR 3.3.2.~~35~~ SR 3.3.2.~~69~~ CL3.3-237 ~~SR 3.3.2.10~~ | X3.3-261 ≤ 90~~84.2~~ % | ~~≤ 82.4~~% |
| c. Safety Injection | Refer to Function 1 (Safety Injection) for all initiation functions and requirements. | | | | | |
| 6. Auxiliary Feedwater | | | | | | |
| ~~a. Automatic Actuation Logic and Actuation Relays (Solid State Protection System)~~ | ~~1,2,3~~ | ~~2 trains~~ | G | ~~SR 3.3.2.2~~ ~~SR 3.3.2.4~~ ~~SR 3.3.2.6~~ | CL3.3-262 ~~NA~~ | ~~NA~~ |
| ~~a~~b. Automatic Actuation Relay Logic ~~and Actuation Relays (Balance of Plant ESFAS)~~ CL3.3-238 | 1,2,3 | 2 trains | CL3.3-227 ~~I G~~ | CL3.3-232 SR 3.3.2.~~23~~ | NA | ~~NA~~ |
| ~~b~~c. ~~Low-~~ Low SG Water Level ~~Low Low~~ CL3.3-241 | 1,2,3 | ~~3~~ per SG | D | SR 3.3.2.1 SR 3.3.2.~~35~~ SR 3.3.2.~~69~~ CL3.3-237 ~~SR 3.3.2.10~~ | CL3.3-203 ≥ 5~~30.4~~% | ~~≥ 32.2~~% |

(continued)

TA3.3-176

# Prairie Island ITS Section 3.3.2 Logic Testing

- Test circuit inhibits actuation of those master and slave relays whose output contacts provide direct equipment actuation
- On-line ALT tests
  - all master and slave relays whose contact outputs remain within the relay logic
  - continuity check of relay coils for relays that are not actuated

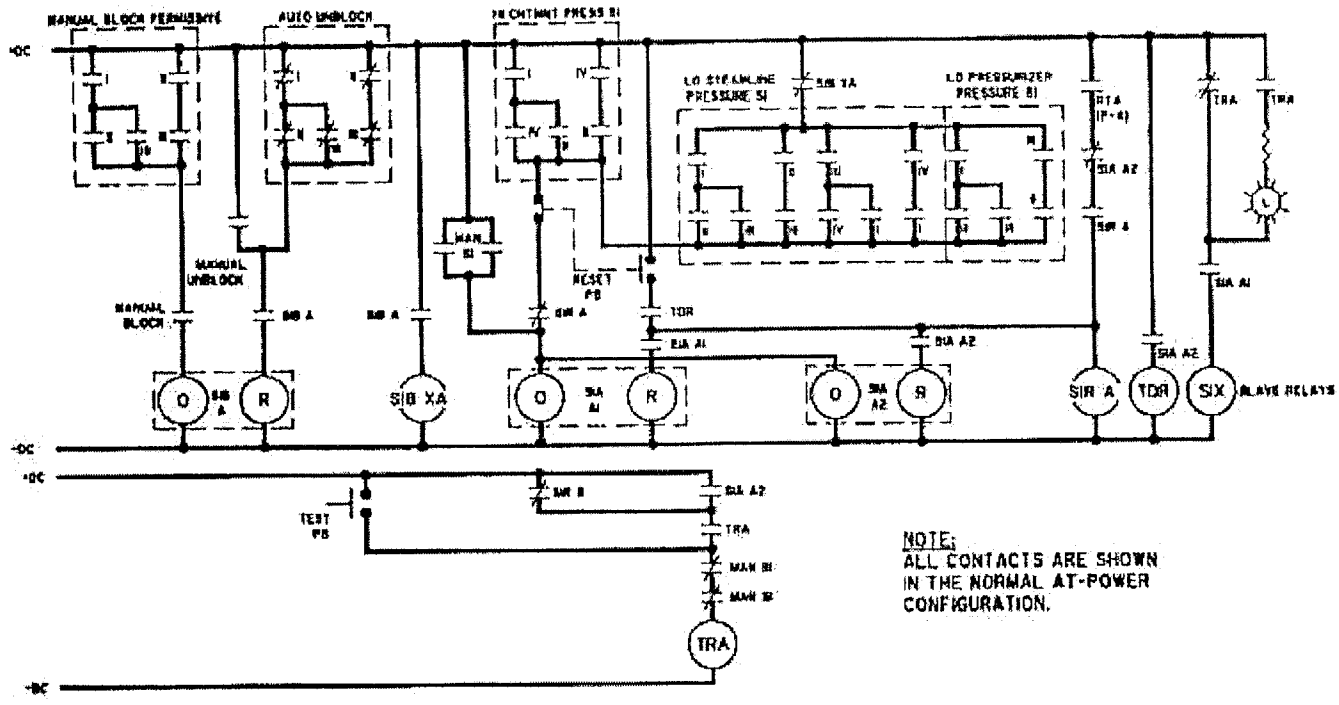


# SI Actuation Circuitry

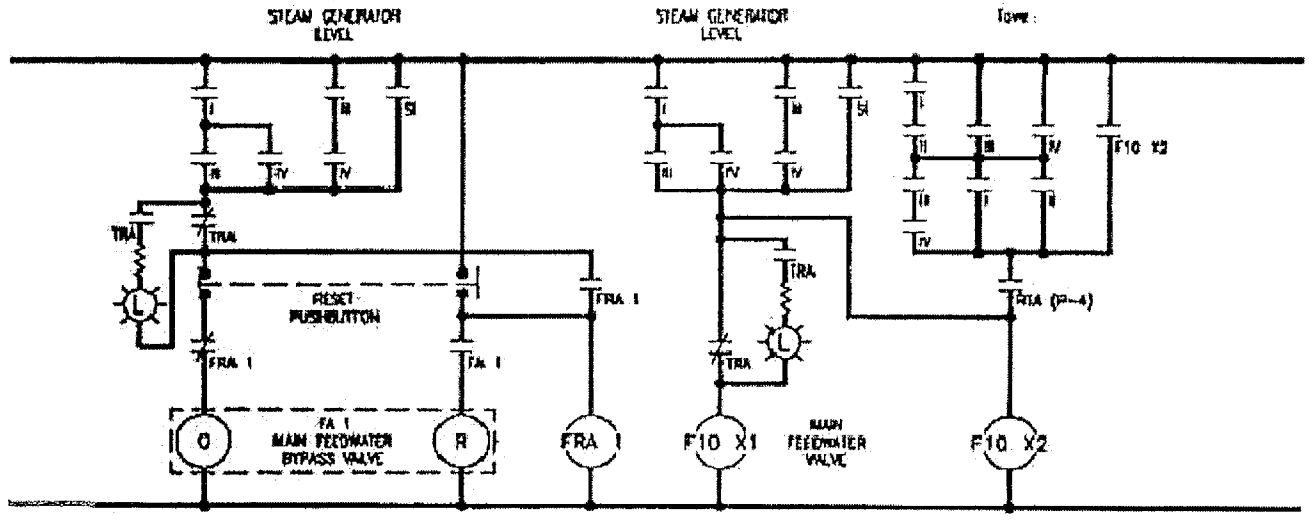


NOTE:
When F10 X1 slave relay energizes, the Train A air supply SV's for both Main Feedwater Valves vent.

# FWI Actuation Circuitry

# Prairie Island ITS Section 3.3.2 Logic Testing

- Outage testing verifies operation of relays not actuated during on-line ALT
- ISTS SR's 3.3.2.4 and 3.3.2.6 not included in PI ITS

# Prairie Island ITS Section 3.3.3

- CET requirements per CTS
- Included "Submit a report to the NRC" as the final Action, per CTS
- Specified a TADOT (terminology unique for Westinghouse plants) as SR for Containment Isolation Valve Position Indication

# Prairie Island ITS Section 3.3.4 Load Sequencers Included

- Load Sequencers included with LOOP/degraded voltage detection
- 3.3.4 provides conditions, actions and SRs specific to the load sequencers

## 3.3 INSTRUMENTATION

PA3.3-311

### 3.3.~~4~~5 4 kV Safeguards Bus Voltage~~Loss of Power (LOP) Diesel Generator (DG) Start~~ Instrumentation

LCO 3.3.~~4~~5 The following 4 kV safeguards bus voltage instrumentation Functions shall be OPERABLE:

a. Two~~[Three]~~ channels per bus of the under~~loss of~~ voltage Function~~; and~~ CL3.3-313

b. Two~~[three]~~ channels per bus of the degraded voltage Function~~shall be OPERABLE~~; and

c. Two trains of automatic load sequencers. X3.3-312

APPLICABILITY: MODES 1, 2, 3, and 4,
When associated Diesel Generator (DG) is required to be OPERABLE by LCO 3.8.2, "AC Sources – Shutdown."

ACTIONS

----------NOTE----------
Separate Condition entry is allowed for each Function.
---

# Prairie Island ITS Section 3.3 Miscellaneous Items

- SR 3.3.1.4 Note 1 revised to require performance "when" placing bypass breaker in service
- ISTS 3.3.2 Function 4g - High Steam Flow input deleted, separate LAR.
- ITS SR 3.3.2.5 added to incorporate CTS requirement of testing Manual SI input on staggered frequency.

SURVEILLANCE REQUIREMENTS (continued)

| SURVEILLANCE | | FREQUENCY |
|---|---|---|
| SR 3.3.1.3 | ----------NOTES----------<br>1. Adjust NIS channel if absolute difference is ≥ 3%.<br><br>2. Only~~Not~~ required to be performed with ~~until [24] hours after~~ THERMAL POWER ~~is~~ ≥ [15]% RTP.<br>----------<br><br>Compare results of the incore detector measurements to NIS AFD. | PA3.3-168<br><br>Prior to exceeding 75% RTP after each refueling<br><br>AND<br><br>31 effective full power days (EFPD) |

(continued)

| | | |
|---|---|---|
| SR 3.3.1.4 | ----------NOTES----------<br>1. This Surveillance must be performed on the reactor trip bypass breaker when ~~prior to~~ placing the bypass breaker in service.<br><br>2. Verification of setpoints not required.<br>----------<br><br>Perform TADOT. | PA3.3-160<br><br>31 days on a STAGGERED TEST BASIS |

Table 3.3.2-1 (page 5 of 8)
Engineered Safety Feature Actuation System Instrumentation

| FUNCTION | APPLICABLE MODES OR OTHER SPECIFIED CONDITIONS | REQUIRED CHANNELS | CONDITIONS | SURVEILLANCE REQUIREMENTS | ALLOWABLE VALUE | TA3.3-176 ~~TRIP SETPOINT~~ ~~(a)~~ |
|---|---|---|---|---|---|---|
| 4. Steam Line Isolation (continued) | | | | | | |
| ~~f. High Steam Flow in Two Steam Lines~~ | ~~1,2(i), 3(i)~~ | ~~2 per steam line~~ | ~~B~~ | ~~SR 3.3.2.1~~<br>~~SR 3.3.2.5~~<br>~~SR 3.3.2.9~~<br>~~SR 3.3.2.10~~ | ~~(e)~~ | ~~(f)~~ |
| ~~Coincident with Steam Line Pressure Low~~ | ~~1,2,(i) 3(i)~~ | ~~1 per steam line~~ | ~~B~~ | ~~SR 3.3.2.1~~<br>~~SR 3.3.2.5~~<br>~~SR 3.3.2.9~~<br>~~SR 3.3.2.10~~ | ~~≥ [635](c)~~ psig | ~~≥ [675](c)~~ psig |
| cg. ~~Low-Low~~ X3.3-239 ~~$T_{avg}$ High Steam Flow~~ | CL3.3-256<br>1,2(ci), 3(ci)(d) | ~~4 2 per steam~~<br>CL3.3-253<br>~~line~~ | D | SR 3.3.2.1<br>SR 3.3.2.35<br>SR 3.3.2.69<br>CL3.3-237<br>~~SR 3.3.2.10~~ | X3.3-177<br>≥ 542 °F<br>~~≤ [25]% of full steam flow at no load steam pressure~~ | ~~≤ [ ] full steam flow at no load steam pressure~~ |
| Coincident with Safety Injection | Refer to Function 1 (Safety Injection) for all initiation functions and requirements. | | | | | |
| and | | | | | | |
| ~~Coincident with~~ X3.3-239 ~~$T_{avg}$ Low Low~~ | ~~1,2(i), 3(d)(i)~~ | ~~[2] per loop~~ | ~~B~~ | ~~SR 3.3.2.1~~<br>~~SR 3.3.2.5~~<br>~~SR 3.3.2.9~~<br>~~SR 3.3.2.10~~ | ~~≥ [550.6] °F~~ | ~~≥ [553] °F~~ |
| dh. High High Steam Flow | 1,2(ci), 3(ci) | 2 per steam line | D | SR 3.3.2.1<br>SR 3.3.2.35<br>SR 3.3.2.69<br>CL3.3-237<br>~~SR 3.3.2.10~~ | CL3.3-242<br>≤ 4.5E6 lb/hr at 735 psig~~[130]% of full steam flow at full load steam pressure~~ | ~~≤ [ ] of full steam flow at full load steam pressure~~ |
| Coincident with Safety Injection | Refer to Function 1 (Safety Injection) for all initiation functions and requirements. | | | | | |

SURVEILLANCE REQUIREMENTS (continued)

| SURVEILLANCE | | FREQUENCY |
|---|---|---|
| ~~SR 3.3.2.6~~ | ~~Perform SLAVE RELAY TEST.~~ | CL3.3-233 ~~[92] days~~ |
| | | (continued) |
| ~~SR 3.3.2.7~~ | ~~NOTE~~ ~~Verification of relay setpoints not required.~~ ~~Perform TADOT.~~ | CL3.3-234 ~~[92] days~~ |
| SR 3.3.2.~~48~~ | NOTE Verification of setpoint not required~~for manual initiation functions~~. Perform TADOT. | CL3.3-235 X3.3-172 24~~[18]~~ months |
| SR 3.3.2.5 | NOTE Verification of setpoint not required. Perform TADOT. | CL3.3-236 24 months on a STAGGERED TEST BASIS |

# Prairie Island ITS Section 3.8 Major Topics

- Regulatory criteria applicability
- 3.8.1
  - Load Sequencer location
  - CTS restoration times
  - Offsite path configuration
- Shutdown Technical Specifications
- 3.8.3 Contents
- 3.8.4 & 3.8.6 - TSTF 360 status

# Prairie Island ITS Section 3.8 Regulatory Criteria Applicability

- PI license application and review pre-dates 10 CFR 50 Appendix A GDC, refers to 1967 AEC GDC
- Regulatory Guidance, Generic Letter, and Standards applicability identified in USAR or individual commitments

# Prairie Island ITS Section 3.8.1
# AC Sources - Operating

- Load sequencers in PI ITS Section 3.3.4
- Condition A and B Completion Times require restoration within 7 days, per CTS
- DG vintage - Unit 1, D1 & D2, 1970 design
  - Unit 2, D5 & D6, 1990 design

ACTIONS

PA3.8-100

| CONDITION | REQUIRED ACTION | COMPLETION TIME |
|---|---|---|
| A. (continued) | A.~~3~~2 Restore ~~[required]~~ ~~offsite~~path~~circuit~~ to OPERABLE status. | CL3.8-105 ~~72 hours~~ 7 days<br><br>~~AND~~ CL3.8-106 ~~6 days from discovery of failure to meet LCO~~ |

ACTIONS

PA3.8-100

| CONDITION | REQUIRED ACTION | | COMPLETION TIME |
|---|---|---|---|
| B. (continued) | B.3.2 | Perform SR 3.8.1.2 for OPERABLE DG~~(s)~~. | ~~[~~24~~]~~ hours |
| | AND | | |
| | B.4 | Restore ~~[required]~~ DG to OPERABLE status. | 7 days~~72 hours~~ CL3.8-108<br>~~AND~~<br>~~6 days~~ CL3.8-106 ~~from discovery of failure to meet LCO~~ |
| C. Two ~~[required]~~ ~~offsite~~paths ~~circuits~~ inoperable. | C.1 | Declare required feature(s) inoperable when its redundant required feature(s) is inoperable. | 12 hours from discovery of Condition C concurrent with inoperability of redundant required features |
| | AND | | |
| | C.2 | Restore one ~~[required] offsite~~ path~~circuit~~ to OPERABLE status. | 24 hours |

(continued)

# Prairie Island ITS Section 3.8.1
# AC Sources - Operating

- Offsite path configuration

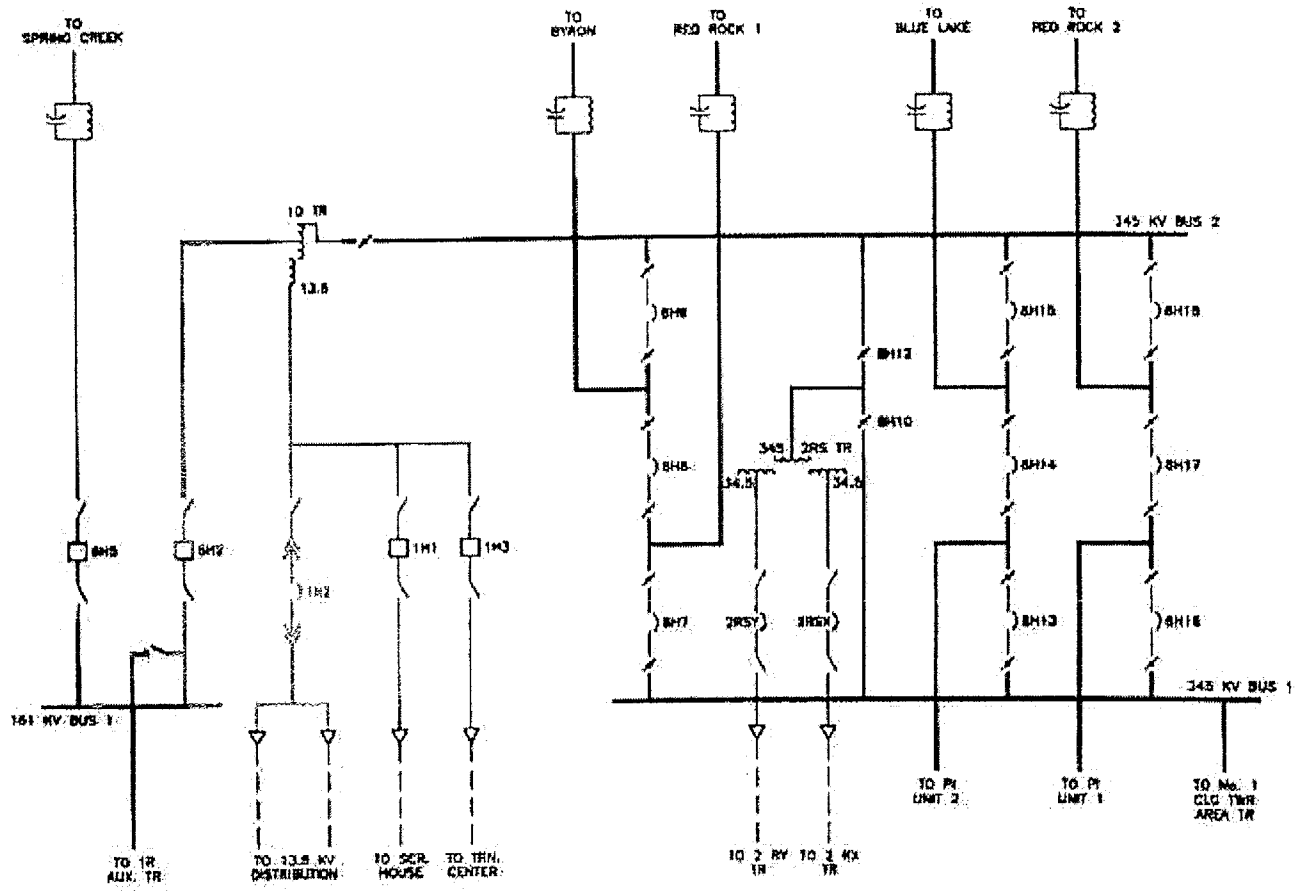


| Northern States Power Company<br>Prairie Island Training Center | Switchyard Diagram | REV: 1<br>2/9/89 | B20.2-01 |
|---|---|---|---|

# Path From Grid Unit 1

## Figure 1

| NUMBER: |
|---|
| SP 1118 |
| REV: 8 |
| Page 15 of 15 |

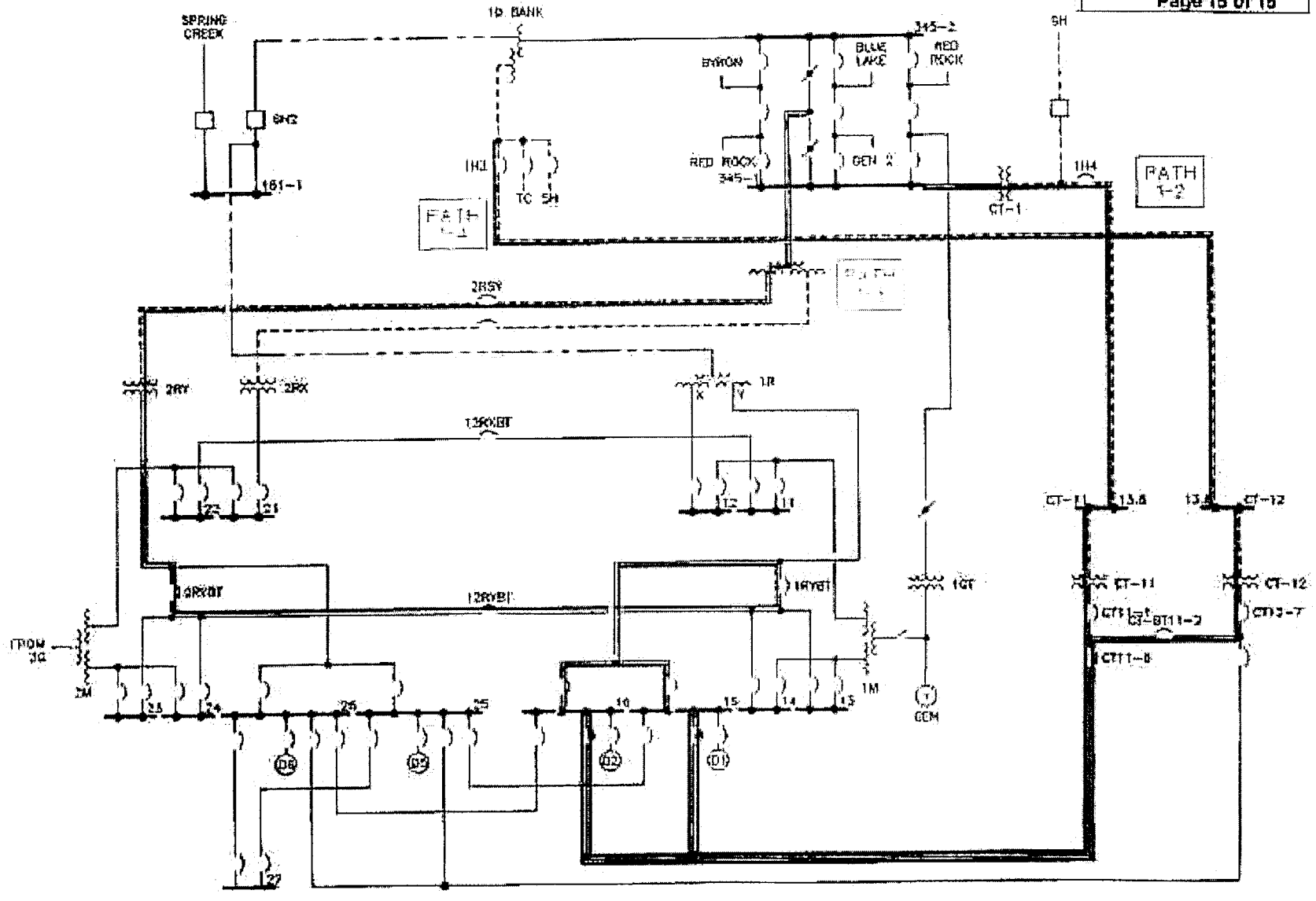

# Prairie Island ITS Section 3.8 Shutdown Electrical Tech Specs

- CTS does not contain electrical system specifications below 200°F
- Current shutdown safety assessment credits electrical equipment which is available but not "OPERABLE"

# Prairie Island ITS Section 3.8.2 AC Sources - Shutdown

- Allowance provided for performance of SR 3.8.1.10

## 3.8 ELECTRICAL POWER SYSTEMS

### 3.8.2 AC Sources – Shutdown

LCO 3.8.2 The following AC electrical power sources shall be OPERABLE:

a. One path~~qualified circuit~~ between the offsite transmission grid~~network~~ and the onsite 4 kV Safeguards~~Class 1E AC electrical power~~ D~~d~~istribution ~~subs~~System~~(s)~~ required by LCO 3.8.10, "Distribution Systems – Shutdown "; and

b. One diesel generator (DG) capable of supplying one train of the onsite 4 kV Safeguards~~Class 1E AC electrical power D~~distribution ~~subs~~System~~(s)~~ required by LCO 3.8.10.

-----NOTE-----
LCO 3.8.2 may not be applicable for a period of 8 hours during the performance of SR 3.8.1.10.
---

PA3.8-211

APPLICABILITY: MODES 5 and 6,
During movement of irradiated fuel assemblies.

ACTIONS

-----NOTE-----
LCO 3.0.3 not applicable.
---

TA3.8-140

# Prairie Island ITS Section 3.8.3 Diesel Fuel Oil

- CTS does not include specific requirements for DG lube oil or starting air, thus 3.8.3 limited to fuel oil requirements
- Fuel oil receiving and storage tank differences between units

## 3.8 ELECTRICAL POWER SYSTEMS

### 3.8.3 Diesel Fuel Oil~~, Lube Oil, and Starting Air~~

LCO 3.8.3 The stored diesel generator (DG) fuel oil supply~~, lube oil, and starting air subsystem~~ shall be within limits~~ for each required diesel generator (DG)~~.

APPLICABILITY: When ~~associated~~ the DG(s) is required to be OPERABLE.

ACTIONS PA3.8-134

----------~~NOTE~~----------
~~Separate Condition entry is allowed for each DG.~~
---

| CONDITION | REQUIRED ACTION | COMPLETION TIME |
|---|---|---|
| A. ~~One or more~~ DGs stored ~~with~~ fuel ~~level~~oil supply:<br><br>Unit 1 < ~~[33,000]~~ 42,000 gal and > 36,000 gal;<br><br>Unit 2 ~~> [28,285]~~ < 75,000 gal and > 65,000 gal.<br><br>~~in storage tank.~~ | A.1 Restore fuel oil ~~level~~supply to within limits. | 48 hours<br>PA3.8-103 |

# Prairie Island ITS Section 3.8.4 DC Sources - Operating & 3.8.6 Battery Cell Parameters

- Traveler TSTF 360 uncertainty, PI ITS incorporates draft as of August, 2000

## 3.8 ELECTRICAL POWER SYSTEMS

### 3.8.4 DC Sources – Operating

LCO 3.8.4 The Train A and Train B DC safeguards electrical power source~~subsystem~~s shall be OPERABLE.

APPLICABILITY: MODES 1, 2, 3, and 4.

ACTIONS

| CONDITION | REQUIRED ACTION | COMPLETION TIME |
|---|---|---|
| A. One battery charger inoperable. | A.1 Verify the associated battery OPERABLE.<br><br>AND<br><br>A.2 Restore battery charger to OPERABLE status. | 2 hours<br>TP3.8-160<br><br>8 hours<br>CL3.8-171 |
| B. One battery inoperable. | B.1 Restore battery to OPERABLE status. | 8 hours<br>TP3.8-160<br>CL3.8-171 |
| ~~C.~~ One DC safeguards electrical power source~~subsystem~~ inoperable for reasons other than Condition A or B. | ~~C~~.1 Restore DC safeguards electrical power source~~subsystem~~ to OPERABLE status. | ~~2~~8 hours<br>TP3.8-160<br>CL3.8-171 |

# ITS Conversion LAR issues

- WordPerfect CD
- Robinson Tables
- NRC Schedule
- Periodic meetings
- NRC issues

**Nuclear Management Company (NMC) Prairie Island 1 & 2 - ITS Schedule (TAC NOS.** MB0696 and MB0695)
**Submittal Received: December 12, 2000. Estimated Review Period: January 8, 2001 - April 30, 2002**

| Section | Reviewer | 1.Screen | 2. Start | 3. TSB RAI Sent | 4. PI RAI Reply | 5. Close Open Items | 6. PI sends SE Tables | 7. NRR Table Review | 8.Send Draft SE to PI | 9. PI Draft SE Markup | 10. Final SE to OGC | 11. OGC concurs | 12. Amd. Issued | Licensee Implemen t |
|---|---|---|---|---|---|---|---|---|---|---|---|---|---|---|
| 1.0 Use/Application | Angela Chu | **1/8/01** | 1/15/01 | 3/9/01 | 4/20/01 | 6/22/01 | 7/20/01 | 2/1/02 | 2/15/02 | 3/8/02 | 3/22/02 | 4/12/02 | 4/30/02 | |
| 2.0 Safety Limits | Nan Gilles | **1/8/01** | 2/26/01 | 4/20/01 | 6/1/01 | 8/3/01 | 8/31/01 | | | | | | | |
| 3.0 LCO/SR Appl | Angela Chu | **1/8/01** | 1/15/01 | 3/9/01 | 4/20/01 | 6/22/01 | 7/20/01 | | | | | | | |
| 3.1 Reactivity Control | Bob Tjader | **1/8/01** | 2/26/01 | 6/14/01 | 9/6/01 | 11/8/01 | 12/6/01 | | | | | | | |
| 3.2 Power Distr | Bob Tjader | **1/8/01** | 2/26/01 | 6/14/01 | 9/6/01 | 11/8/01 | 12/6/01 | | | | | | | |
| 3.3 Instrumentation | Carl Schulten | **1/8/01** | 3/26/01 | 7/13/01 | 10/5/01 | 12/7/01 | 1/11/02 | | | | | | | |
| 3.4 RCS | Kerri Kavanagh | **1/8/01** | 3/26/01 | 7/13/01 | 10/5/01 | 12/7/01 | 1/11/02 | | | | | | | |
| 3.5 ECCS | Tilda Liu | **1/8/01** | 2/26/01 | 6/14/01 | 9/6/01 | 11/8/01 | 12/6/01 | | | | | | | |
| 3.6 Containment | Bob Giardina | **1/8/01** | 1/29/01 | 5/17/01 | 8/9/01 | 10/11/01 | 11/8/01 | | | | | | | |
| 3.7 Plant Systems | Craig Harbuck | **1/19/01** | 2/26/01 | 6/14/01 | 9/6/01 | 11/8/01 | 12/6/01 | | | | | | | |
| 3.8 Electrical | Ed Tomlinson | **1/8/01** | 1/29/01 | 5/17/01 | 8/9/01 | 10/11/01 | 11/8/01 | | | | | | | |
| 3.9 Refueling | Bob Tjader | **1/8/01** | 2/26/01 | 6/14/01 | 9/6/01 | 11/8/01 | 12/6/01 | | | | | | | |
| 4.0 Design Features | Angela Chu | **1/8/01** | 1/15/01 | 3/9/01 | 4/20/01 | 6/22/01 | 7/20/01 | | | | | | | |
| 5.0 Admin. Controls | Nan Gilles | **1/8/01** | 2/26/01 | 4/20/01 | 6/1/01 | 8/3/01 | 8/31/01 | | | | | | | |