U.S. Nuclear Regulatory Commission
Seabrook Site Specific
Written Examination

Applicant Information	
Name:	Region: I
Date:	Facility/Unit: Seabrook
License Level: SRO	Reactor Type: Westinghouse PWR
Start Time:	Finish Time:

Instructions

Use the answer sheets provided to document your answers. Staple this cover sheet on top of the answer sheets. The passing grade requires a final grade of at least 80.00 percent. Examination papers will be collected four hours after the examination starts.

Applicant Certification

All work done on this examination is my own. I have neither given nor received aid.

_____

Applicant's Signature

Results

Examination Value	100	Points
Applicant's Score	_____	Points
Applicant's Grade	_____	Percent

SEABROOK NRC EXAM
WRITTEN EXAMINATION
LOUT 2000 Answer Key

1.	A	26.	D	51.	D	76.	B
2.	B	27.	D	52.	B	77.	A
3.	D	28.	A	53.	A	78.	A
4.	B	29.	C	54.	C	79.	A
5.	D	30.	C	55.	B	80.	D
6.	B	31.	B	56.	A	81.	D
7.	C	32.	A	57.	B	82.	B
8.	D	33.	A	58.	D	83.	A
9.	C	34.	A	59.	C	84.	C
10.	B	35.	A	60.	B	85.	B
11.	C	36.	A	61.	D	86.	C
12.	C	37.	C	62.	C	87.	C
13.	D	38.	D	63.	D	88.	D
14.	A	39.	D	64.	B	89.	B
15.	B	40.	C	65.	A	90.	A
16.	B	41.	A	66.	D	91.	C
17.	C	42.	B	67.	C	92.	D
18.	B	43.	A	68.	B	93.	C
19.	B	44.	C	69.	D	94.	C
20.	B	45.	D	70.	A	95.	D
21.	C	46.	B	71.	A	96.	C
22.	A	47.	B	72.	B	97.	A
23.	C	48.	B	73.	B	98.	C
24.	C	49.	D	74.	D	99.	B
25.	D	50.	C	75.	B	100.	D

Question 1

The plant is at 99 % power. All control systems are operating in AUTO, with the exception of Rod Control, which is operating in MANUAL.

Control Bank 'D' is at 198 steps.

The Primary Board Operator withdraws Control Bank 'D' two steps to maintain Tave on program. When the In/Hold/Out switch is released, Control Bank 'D' rods continue to move in the OUT direction.

In accordance with OS1210.04, INADVERTENT ROD WITHDRAWAL, what action is required?

A. Trip the reactor, go to E-0, REACTOR TRIP OR SAFETY INJECTION.

B. Attempt to reinsert Control Bank 'D' to 198 steps using the In/Hold/Out switch. If Control Bank 'D' will not stop moving, trip the reactor and go to E-0, REACTOR TRIP OR SAFETY INJECTION.

C. Place the Rod Bank Selector Switch to the CBD position. If rods will not stop moving trip the reactor and go to E-0, REACTOR TRIP OR SAFETY INJECTION.

D. Place the Rod Bank Selector Switch in the AUTO position. If rods will not stop moving trip the reactor and go to E-0, REACTOR TRIP OR SAFETY INJECTION.

Question 2

The following conditions exist:

- All control systems in AUTOMATIC

An event occurs, causing a drop in reactor power to 97% followed by an increase to 99%
- Tave DECREASED 2°F
- Control Bank D is at 222 steps and withdrawing

Which of the following events may have caused these indications?

A. A Main Turbine Control valve inadvertently closed.

B. A control rod has dropped.

C. Inadvertent control rod withdrawal.

D. A Main Steam safety valve is leaking.

Question 3

During performance of OX1410.02, QUARTERLY ROD OPERABILITY CHECK AND MONTHLY NEW FULL OUT POSITION SURVEILLANCE, Rod F2 in Control Bank 'B', group 1 stops moving when it is 14 steps from it's new "Full Out" bank position. I&C reports that the Lift Coil has failed and the rod is declared INOPERABLE.

Technical Specification 3.1.3.1, ACTION b.3.d limits reactor power to 75% Rated Thermal Power.

Which of the following is the reason for this power limit?

A. Acceptable power distribution is assured and continued operation is allowed if the rod is declared untrippable.

B. Allows the plant to be operated without performing a re-evaluation of the safety analysis affected by a misaligned rod.

C. Relieves the operators of having to calculate shutdown Margin every 12 hours.

D. Provides assurance of fuel rod integrity during continued operations.

Question 4

The following conditions exit:

- No forced or natural RCS circulation flow
- Inadequate core cooling exists following a LOCA
- The crew is performing actions of FR-C.1, RESPONSE TO INADEQUATE CORE COOLING

Which of the following is the primary reason for restoring Narrow Range level in at least one intact steam generator to greater than 5% (25% for adverse containment)?

A. Ensures SG level is above the U-Tubes for adequate "Iodine Partitioning"

B. Maintains intact SG(s) available as heat sink.

C. Keeps the feed ring covered to prevent water hammer.

D. Maintains the SG tubes covered to prevent thermal gradients from forming.

Question 5

The following plant conditions exist:

- A rupture in the piping downstream of SI-V138/139 has occurred
- The check valves on the piping connecting to the RCS have failed causing a LOCA into the Containment penetration area of the PAB
- The Reactor has tripped and Safety Injection has actuated on Low PZR Pressure
- All ECCS systems are operating as designed.
- The crew transitions to ECA-1.2, LOCA OUTSIDE CONTAINMENT, at step # 25 of E-0 based upon abnormal PAB radiation level.

Assuming plant conditions do not significantly change and the leak is unisolable, what procedure in the EOP network will ultimately be used to deal with this accident?

A. ES-1.2, POST LOCA COOLDOWN & DEPRESSURIZATION.

B. ECA-1.2, LOCA OUTSIDE CONTAINMENT

C. E-1, LOSS OF REACTOR OR SECONDARY COOLANT.

D. ECA-1.1, LOSS OF EMERGENCY COOLANT RECIRCULATION.

Question 6

A small break LOCA has occurred. Automatic SI is actuated but the reactor does not trip.

In accordance with FR-S.1, the crew shuts the reactor down using manual rod insertion and emergency boration. The emergency boration is continuing.

The crew transitions to E-1, LOSS OF REACTOR OR SECONDARY COOLANT, from E-0, Step #20. At Step #8 of E-1 the Primary Operator is directed to reset SI to enable stopping of the RHR pumps. SI will NOT reset.

What is the cause of the SI reset failure?

A. The initiating condition causing the SI actuation has not cleared.

B. The Reactor Trip Breakers are closed.

C. The timer in the Safety Injection Block/Reset logic has not timed out.

D. The automatic reactor trip signal has cleared.

Question 7

The plant is at 30 % power during a Plant Startup with all control systems in AUTOMATIC.

RCP 'A' trips on Phase Differential Overcurrent.

Assuming no operator action, which of the following describes the response of the plant to the RCP trip?

A. Steam flow decreases in all SGs. All SG levels initially decrease, then increase as the secondary plant stabilizes and SGWLC responds. Control Rods withdraw to maintain Tave on program.

B. Steam flow decreases in all SGs. SG 'A' level initially increases due to overfeeding. SG 'B', 'C', 'D' levels initially decrease due to increased steam demand. SG levels return to normal as SGWLC responds. Tave remains unaffected because Reactor power remains unaffected.

C. Steam pressure decreases in all SGs. SG 'A' level decreases due to the loss of heat input. SG 'B', 'C', 'D' levels increase due to increased steam demand. SG levels return to normal as SGWLC responds. Tave and Tref stabilize at a lower value.

D. Steam pressure decreases in all SGs. SG 'A' level decreases due to the loss of heat input. SG 'B', 'C', 'D' levels increase due to increased steam demand. SG levels return to normal as SGWLC responds. Control rods withdraw to return Tave to it's previous value.

Question 8

The plant is operating at 100 % power when a Loss of Off-Site power causes a reactor trip. Two minutes following the trip, the following conditions exist:

- All 4 S/G pressures trending slowly upward toward ASDV lift setpoint.
- Core Exit Thermocouple temperatures are slowly increasing.
- RCS Cold leg temperatures are slowly increasing.
- RCS Hot leg temperatures are slowly increasing.

Based on the above indications, what is the condition of the RCS?

A. Natural Circulation has developed. Heat removal is being maintained by the condenser steam dumps.

B. Natural Circulation has not developed. Heat removal may be established by opening the condenser steam dumps.

C. Natural Circulation has developed. Heat removal is being maintained by atmospheric steam dumps.

D. Natural Circulation has not developed. Heat removal may be established by opening the atmospheric steam dump valves.

Question 9

The crew is performing a rapid power decrease at BOL from 100% power to 30% power.

Control Rods are in AUTO. Load reduction is being performed using turbine LOAD LIMIT.

The following alarms are received:

- D7761 CTL ROD BANK D INSERTION LIMIT LOW
- D7762 CTL ROD BANK D INSERTION LIMIT LO-LO

The crew initiates rapid boration per OS1202.04. Assuming the turbine load decrease rate remains constant throughout the event, which of the following describes the effects of the boration on the plant?

A. Control rods will insert at a FASTER rate.
   Tave will INCREASE

B. Control rod insertion rate is unchanged
   Tave will DECREASE

C. Control rods will insert at a SLOWER rate
   Tave will DECREASE

D. Control rod insertion rate is unchanged
   Tave will INCREASE

Question 10

The following plant conditions exist:

- Train 'A' RHR is operating in the shutdown cooling mode.
- RCS temperature is 320°F and stable
- RCP-1C is operating
- MPCS VAS B4787 PCCW HD TK LVL RATE OF CHANGE HIGH is in alarm.
- TRN 'A' PCCW HEAD TANK level is decreasing

Which of the following is the cause of the noted conditions?

A. A tube leak in the CVCS regenerative heat exchanger.

B. A tube leak in a Seal Water Return heat exchanger.

C. A leak in the 'C' RCP thermal barrier heat exchanger.

D. A tube leak in the 'A' RHR heat exchanger.

Question 11

At step 4 of FR-S.1, RESPONSE TO NUCLEAR POWER GENERATION/ATWS, the operator checks RCS pressure less than 2385 psig. If NOT, the operator is directed to open the PORVs until RCS pressure is less than 2185 psig.

What is the basis for this action?

A. Ensures RCS pressure does NOT rise to the safety valve lift setpoint.

B. Ensures no RCS mass is being lost through unnecessary automatic PORV operation.

C. At 2385 psig, charging flow into the RCS is assumed to be insufficient.

D. At 2385 psig, for the design basis ATWS, RCS integrity is being challenged.

Question 12

Plant Conditions:

- A plant event has resulted in implementation of ECA-2.1, UNCONTROLLED DEPRESSURIZATION OF ALL STEAM GENERATORS.
- Bus E-6 is de-energized leaving the steam driven EFW pump as the only source of EFW flow to the steam generators.
- NR level in all four S/Gs is off scale low.
- The operators have throttled EFW flow to 25 gpm per S/G in accordance with step #2 of ECA-2.1 causing a RED path on heat sink.
- The steam driven EFW pump subsequently trips.

In accordance with rules of usage, what action is required to be taken by the crew?

A. Continue with ECA-2.1. The caution prior to step #1 prohibits transition to FR-H.1.

B. Attempt to place the startup feed pump in service while continuing with ECA-2.1.

C. Transition to FR-H.1. RESPONSE TO LOSS OF SECONDARY HEAT SINK.

D. Continue with ECA-2.1 SG NR levels are adequate.

Question 13

Which of the following is characteristic of an event that would require entry to FR-P.1, RESPONSE TO PRESSURIZED THERMAL SHOCK?

A. RCS PRESSURE DECREASE followed by rapid RCS HEATUP

B. Rapid RCS COOLDOWN followed by RCS PRESSURE DECREASE

C. Rapid RCS COOLDOWN followed by rapid RCS HEATUP

D. Rapid RCS COOLDOWN followed by RCS PRESSURE INCREASE

Question 14

PLANT CONDITIONS:

- Reactor Power is 32 %
- Turbine load has been reduced from 900 MWE to 360 MWE
- Condenser Vacuum is 23.5 inches Hg and slowly decreasing

Based on the above indications, which action is the crew required to take in accordance with ON1233.01, LOSS OF CONDENSER VACUUM?

A. Trip the reactor and go to E-0, REACTOR TRIP OR SAFETY INJECTION.

B. Continue the load decrease to increase condenser vacuum to > 25 inches Hg.

C. Trip the turbine and go to ON1231.02, TURBINE TRIP BELOW P-9.

D. Remove the turbine generator from service IAW OS1000.06, POWER DECREASE.

Question 15

A Loss of All AC power has occurred.

The crew has entered ECA-0.0, LOSS OF ALL AC POWER. An operator has been dispatched to perform Attachment 'A' to shed DC loads.

When Attachment 'A' is completed, which of the following loads will still be energized?

A. ED-PP-12E, Non-Vital Instrument Distribution Panel 12E

B. EDE-PP-1A, Vital Instrument Distribution Panel 1A

C. Bus E61 Auxiliary Bus

D. CP-CP-111, Reactor Trip Switchgear

Question 16

During his routine rounds in the 'A' train essential switch gear room the secondary NSO notices that the "Reverse Transfer" lamp is lit on static transfer switch EDE-CP-1E.

What is the condition of EDE-PP-1E?

A. The transfer switch has swapped EDE-PP-1E back to its inverter supply.

B. The transfer switch has swapped EDE-PP-1E to its alternate supply.

C. The maintenance supply breaker at EDE-PP-1E has tripped open.

D. EDE-PP-1E is de-energized.

Question 17

The liquid radwaste test tank discharge radiation monitor (R-6509) has been declared INOPERABLE.

Which of the following describes the Technical Specification ACTION that will permit release from the liquid waste system?

A. Liquid waste discharge will not be permitted until the discharge radiation monitor is returned to OPERABLE status.

B. A temporary monitor may be used provided its alarm setpoint is more conservative than the R-6509 setpoint to allow the operator sufficient time to manually secure the discharge in the event an alarm condition occurs.

C. Two independent samples of the tank to be discharged must be analyzed, and two technically qualified staff members must independently verify the release rate calculations and the discharge line valve lineup.

D. Samples must be taken every 15 minutes while the discharge is in progress, to verify the effluent is within Technical Specification limits.

Question 18

Plant conditions:

- 'A' Train Service Water (SW) was transferred from the ocean to the cooling tower for quarterly surveillance testing.
- While transferring 'A' Train SW back to the ocean, the breaker for SW-V-54 (Cooling Tower Pump 110A Discharge Valve) tripped on overcurrent and the valve was found to be mechanically bound in the 60% open position.
- Cooling flow to 'A' Train SW loads is nominal at 10,000 gpm.

Which of the following accurately describes the Technical Specification implications of this failure?

A. The 'A' Train Cooling Tower SW loop is operating and OPERABLE. The 'A' Train Ocean SW loop is OPERABLE because both pump switches were placed in pull-to-lock per the normal operating procedure.

B. The 'A' Train Cooling Tower SW loop is operating but INOPERABLE. The 'A' Train Ocean SW loop is INOPERABLE as neither ocean SW pump can be started.

C. The 'A' Train Cooling Tower SW loop is operating and OPERABLE. The 'A' Train Ocean SW loop is INOPERABLE as neither ocean SW pump can be started.

D. The 'A' Train Cooling Tower SW loop is operating but INOPERABLE. The 'A' Train Ocean SW loop is INOPERABLE because both pump switches were placed in pull-to-lock per the normal operating procedure.

Question 19

A fire in the Train 'A' Electrical Penetration Area has been confirmed by the Fire Brigade, and the control room crew has entered OS1200.00, RESPONSE TO FIRE OR FIRE ALARM ACTUATION. Prior to initiating the equipment disabling actions identified in the procedure, the 'A' PZR PORV spuriously opens, causing a Safety Injection actuation.

What action is required to be taken by the crew?

A. Continue with the actions of OS1200.00 and close the 'A' PORV block valve.

B. Transition to E-0, REACTOR TRIP OR SAFETY INJECTION, to deal with the Safety Injection actuation.

C. Transition to OS1200.01, SAFE SHUTDOWN AND COOLDOWN FROM THE MAIN CONTROL ROOM.

D. Transition to OS1200.02, SAFE SHUTDOWN AND COOLDOWN FROM THE REMOTE SAFE SHUTDOWN FACILITIES.

Question 20

Plant conditions:

- The control room has been evacuated due to a fire and the remote safe shutdown facilities have been manned.
- Remote safe shutdown system lineups have not yet been initiated.
- The Local/Remote switch on Bus E-5 for RH-P-8A is in REMOTE.
- SSPS in not defeated. → IS
- A valid SI signal has just been received.

Which of the following describes the response of RH-P-8A?

A. The pump will start and remains running until the "SI" signal is reset, at which time the pump will stop.

B. The pump will start and remains running until its associated breaker is tripped locally at the switchgear.

C. The pump will not automatically start, but the operator can start/stop the pump using the local control switch at the switchgear.

D. The pump will not automatically start, nor can it be started locally due to the RMO lockout.

Question 21

Plant conditions:

- A large LOCA has occurred.
- The crew is implementing the actions of E-1, LOSS OF REACTOR OR SECONDARY COOLANT
- Containment Pressure has increased above 18 psig and the crew has verified proper CBS actuation.
- All containment Phase 'A' and 'B' isolation valves indicate closed by status panel with the exception of CC-V168, ('A' Train ORC containment isolation).
- The valve position indicating lights for CC-V168 indicate mid position (both Green and Red lamps illuminated).

In accordance with rules of usage, what action is required to be taken by the crew?

A. Continue with the actions of E-1, manually actuate <u>BOTH</u> CBS/P/CVI switches in each train.

B. Continue with the actions of E-1, verify all reactor coolant pumps tripped.

C. A valid ORANGE path exists on Containment Integrity (Z). The Unit Supervisor should transition to FR-Z.1, RESPONSE TO HIGH CONTAINMENT PRESSURE.

D. A valid Yellow path exists on Containment Integrity (Z). The Unit Supervisor should transition to FR-Z.1, RESPONSE TO HIGH CONTAINMENT PRESSURE.

Question 22

The crew has entered FR-C.1, RESPONSE TO INADEQUATE CORE COOLING due to a valid RED path on the Core Cooling CSF.

- CS-P-2A is Danger tagged out of service.
- CS-P-2B cannot be started due to a loss of power to bus E-6.
- RCS pressure is 1900 psig and slowly increasing.
- CETCs are 750 °F and slowly increasing.
- All other ECCS equipment is functioning as designed.
- ECCS flow cannot be verified in either train.

In accordance with FR-C.1, what action is the crew initially required to take to establish some form of injection flow?

A. Start the Positive Displacement Charging Pump and establish flow through CS-FCV-121.

B. Start one RCP to collapse any voids in the RCS that restrict ECCS flow.

C. Open one PORV to depressurize the RCS and allow ECCS flow.

D. Depressurize all intact SGs to 125 psig.

Question 23

Plant Conditions:

- Power is stable at 50% following a setback caused by a trip of the 'B' Main Feedpump.
- The letdown activity radiation monitor (RM-6520-1) went into high alarm 45 minutes ago and the Unit Supervisor entered OS1252.01, PROCESS OR EFFLUENT HIGH RADIATION.
- A verified chemistry sample indicates that dose equivalent I-131 is 2.75 microcuries per gram.

What action is required to be taken by the crew?

A. Trip the reactor and go to E-0, REACTOR TRIP OR SAFETY INJECTION. Refer to OS1202.05, RCS HIGH ACTIVITY, after transitioning to ES-0.1, REACTOR TRIP RESPONSE.

B. Refer to OS1202.05, RCS HIGH ACTIVITY. Technical Specifications require that the plant be in MODE 3 with Tave less than 500°F within 6 hours.

C. Refer to OS1202.05, RCS HIGH ACTIVITY. Technical Specifications allows for continued operation for up to 48 hours under these conditions while increasing RCS sampling requirements to once every 4 hours.

D. Refer to OS1202.05, RCS HIGH ACTIVITY, and reduce letdown flow to minimize CVCS contamination.

Question 24

A Loss of all AC power has occurred. The crew is performing the actions of ECA-0.0, LOSS OF ALL AC POWER.

The crew commences dumping steam from all steam generators to minimize RCS leakage.

Which of the following describes the reason that the steam generators should **NOT** be depressurized below 125 psig?

A. Remaining above this pressure reduces Pressurized Thermal Shock concern for the reactor vessel.

B. It represents the minimum pressure that the steam generators serve as an effective heat sink.

C. Minimizes the possibility of SI accumulator nitrogen intrusion into the RCS.

D. It represents the minimum pressure that the steam generators can effectively supply the Turbine Driven EFW pump.

Question 25

The plant is at 81 % power.

A pressurizer code safety valve inadvertently lifts and remains partially open.

The following indications exist:

- Pressurizer pressure is 2205 psig and DECREASING.
- Temperature downstream of the safety valve indicates 276°F and INCREASING slowly
- PRT pressure is 47 psig and INCREASING

Which of the following is the reason for the temperature indication seen downstream of the safety valve?

A. The enthalpy of the saturated fluid in the pressurizer vapor space decreases rapidly when it becomes subcooled in the safety valve tailpipe.

B. The enthalpy of the saturated fluid in the pressurizer vapor space decreases as it loses energy due to the high-velocity head loss in the safety valve tailpipe.

C. The enthalpy of the saturated fluid in the pressurizer vapor space decreases as it passes through a safety valve, resulting in a temperature indication corresponding to the low-energy fluid in the tailpipe.

D. The enthalpy of the saturated fluid in the vapor space does not change as it passes through a safety valve, resulting in a temperature indication corresponding to the pressure in the PRT.

Question 26

A Small Break LOCA has occurred. The crew is performing the actions of ES-1.2, POST LOCA COOLDOWN AND DEPRESSURIZATION.

Containment pressure is 5.2 psig and slowly decreasing. ECCS pumps have been stopped. Normal Charging is aligned. The crew is depressurizing the RCS to minimize subcooling. When the depressurization is stopped, the following conditions exist:

- RCS Subcooling is 45°F and DECREASING slowly
- Pressurizer Level is 62% and DECREASING slowly

Based on these indications, what action(s) are required to be taken by the crew?

A. Establish letdown flow to reduce Pressurizer Level to 5%.

B. Manually START ECCS pumps as necessary to increase subcooling.

C. REINITIATE Safety Injection and verify all safeguards equipment has actuated.

D. Continue with the cooldown to cold shutdown. Control charging flow to maintain Pressurizer level greater than 35%.

Question 27

A Plant Trip and Safety Injection has occurred, due to a Steam Generator Fault inside containment.

The following conditions exist:

- All automatic equipment responds as expected
- Containment pressure is 3.2 psig and slowly increasing
- RCS pressure is 1750 psig and decreasing
- Subcooling margin is 105 degrees F and increasing
- Pressurizer level is 22% and decreasing

Assuming conditions ~~do not significantly change,~~ ① in which of the following procedures would you expect to be directed to stop one charging pump?

A. In E-2, FAULTED STEAM GENERATOR ISOLATION.

B. In E-1, LOSS OF REACTOR OR SECONDARY COOLANT.

C. In ES-1.2, POST-LOCA COOLDOWN AND DEPRESSURIZATION.

D. In ES-1.1, SI TERMINATION.

① Clarification:

modified stem to state:

"Assuming conditions respond as expected for a Steam Generator fault, ..."

3/3/00

Question 28

Why does a precaution in OS1008.01, CHEMICAL AND VOLUME CONTROL SYSTEM MAKEUP OPERATIONS, warn the operator to closely monitor VCT level if CS-LT-112 fails high?

A. Automatic makeup is defeated.

B. Divert on high VCT level is defeated.

C. Makeup will **NOT** terminate automatically.

D. Swapover to the RWST will **NOT** occur on SI actuation.

Question 29

During reduced inventory conditions a hot leg vent path capability must be established and maintained to _____.

A. allow a vent path for nitrogen.

B. prevent pressurizer surge line flooding.

C. limit RCS pressurization in the event of a loss of RHR cooling

D. ensure that ultrasonic level instrumentation reads accurately.

Question 30

Due to a failure of PZR pressure channel 455, PZR pressure channels 457/456 have been selected for control and backup respectively. Sometime later, channel 457 fails LOW.

Which of the following describes the effect, if any, this failure has on PORV operation in the present mode?

A. Only PORV 456A is prevented from opening automatically.

B. Only PORV 456B is prevented from opening automatically.

C. Both PORVs are prevented from opening automatically.

D. Both PORVs will open automatically when required.

Question 31

Plant conditions:

- A reactor startup was being performed when source range channel N31 indication failed.
- The startup was halted in accordance with the requirements of Technical Specifications.
- Source range channel N32 power is stable at $6x10^3$ CPS
- The level trip bypass switch for channel N31 is in the BYPASS position
- During performance of trouble shooting on channel N31 its control power fuses blow.

What is the expected plant response, and why?

A. The reactor will NOT trip. Source rang channel N31 is in level trip bypass.

B. The reactor will trip. Level trip bypass requires control power to function and the N31 high flux trip bistable is de-energized on loss of control power.

C. The reactor will NOT trip as the trip signal requires control power to function.

D. The reactor will trip. Loss of control power de-energizes the backup trip bistable, which is in the instrument power circuit.

Question 32

During a Reactor Startup the following conditions exist:

- P-6 has just energized
- Source Range Channel N-31 indicates 5 X 10^3 CPS
- Source Range Channel N-32 indicates 4 X 10^3 CPS
- Intermediate Range Channel N35 indicates 2 X 10^{-10} amps
- Intermediate Range Channel N36 indicates 2 X 10^{-11} amps

Which of the following is the likely cause of the above readings?

A. Intermediate Range Channel N35 is undercompensated.

B. Intermediate Range Channel N36 is undercompensated.

C. Intermediate Range Channel N35 is overcompensated.

D. Intermediate Range Channel N36 is overcompensated.

Question 33

Plant conditions:

- Stable at 100% power.
- 'C' main steamline radiation monitor is in "ALERT" (Yellow) alarm.
- The crew has entered OS1227.02, STEAM GENERATOR TUBE LEAK
- Successive chemistry samples indicate a leakage rate of 80 gallons per day (gpd) and the rate of change in the leak rate is estimated at less than 5 gpd/hr.

What action is required in accordance with the Abnormal procedure?

A. No shutdown required.

B. Shutdown to MODE 3 within 3 hours.

C. Shutdown to MODE 3 within 6 hours.

D. Shutdown to MODE 3 within 8 hours.

Question 34

The plant has sustained a Steam Generator tube rupture concurrent with a loss of Off-Site power. All safeguards systems functioned as designed.

Actions of E-3, STEAM GENERATOR TUBE RUPTURE, have been performed. The crew is preparing to cool down and depressurize the RCS to MODE 5.

Based on current plant conditions, which of the following cooldown methods is preferred?

A. ES-3.1, POST SGTR COOLDOWN USING BACKFILL, because it minimizes radiological release.

B. ES-3.2, POST SGTR COOLDOWN USING BLOWDOWN, because it minimizes the spread of contamination to secondary plant components.

C. ES-3.3, POST SGTR COOLDOWN USING STEAM DUMP, because it is the fastest method of cooldown.

D. ES-3.3, POST SGTR COOLDOWN USING STEAM DUMP, because it conserves CST inventory.

Question 35

The plant is at 15% power when a total loss of Main Feedwater occurs. The reactor does not trip, and the crew enters FR-S.1, RESPONSE TO NUCLEAR POWER GENERATION/ATWS.

What function, if any, will the ATWS Mitigation System provide under these conditions?

A. The ATWS Mitigation System is not armed under these conditions.

B. The ATWS Mitigation System will send a start signal to the EFW pumps when 1/4 SG NR levels are less than 5%.

C. The ATWS Mitigation System will send a trip signal to the Main Turbine when 2/4 detectors on 1/4 SGs are less than 14%.

D. The ATWS Mitigation System will send a start signal to the EFW pumps when 3/4 SG NR levels are less than 5%.

Question 36

A reactor trip with SI has occurred. The crew transitioned from E-0, REACTOR TRIP OR SAFETY INJECTION, to FR-H.1, LOSS OF SECONDARY HEAT SINK, based on a valid RED path condition on the heat sink CSF.

When the crew checked whether heat sink was required, the Primary Operator reported that RCS pressure was 700 psig and slowly decreasing. The Secondary Operator reported that all S/G pressures were approximately 950 psig and stable.

Based on this information, the Unit Supervisor transitioned to E-1, LOSS OF REACTOR OR SECONDARY COOLANT, step 1.

Which of the following is the basis for transitioning from FR-H.1 to E-1?

A. A LOCA is in progress and heat removal rate due to break flow plus SI injection flow is GREATER than the decay heat rate, therefore, a secondary heat sink is not required.

B. A LOCA is in progress and heat removal rate due to break flow plus SI injection flow is LESS than the decay heat rate, therefore, a secondary heat sink is not required.

C. A LOCA is in progress and with primary pressure less than secondary pressure, heat must be transferred to the S/Gs therefore, a return to E-1 is made to restore Steam Generator levels.

D. A LOCA is in progress and with primary pressure less than secondary pressure, heat cannot be transferred to the S/Gs, therefore, a return to E-1 is made to depressurize all S/Gs prior to returning to FR-H.1.

Question 37

Which of the following will occur on a loss of Vital DC Bus 11A?

A. Both EFW pumps start and the MFRV and bypass valves fail open.

B. 'A' train PCCW temperature control and bypass valves fail to their minimum cooling positions (HX bypass).

C. The 'A' train P-14 solenoids on the MFRV and MFRV bypass valves are de-energized causing these valves to fail closed.

D. The 'A' train P-12 solenoids on the steam dump valves are de-energized causing the steam dumps to fail open.

Question 38

The following event has occurred:

- SGTR on 'B' SG
- One safety valve on 'B' SG is stuck open
- RCS activity is high due to failed fuel.
- TDEFW pump steam supply from 'B' SG has not been isolated.

An initial Offsite Dose Projection System (ODPS) run on the ruptured/faulted SG resulted in a Site Area Emergency classification with PAR group 'A'.

A field monitoring team has recommended that another ODPS run be performed because the TDEFW pump is running.

Which of the following is the correct response to the field monitoring team recommendation?

A. Another ODPS run is NOT required since the release is from the ruptured/faulted SG.

B. Run the ODPS program again using the same pathway and current SG pressure. If PAR group 'B' is indicated, reclassification is not required.

C. Run the ODPS program again using the UNMONITORED pathway. If PAR group 'B' is indicated reclassification is not required.

D. Run the ODPS program again using the UNMONITORED pathway. If PAR group 'B' is indicated, reclassify the event.

Question 39

The plant is at full power. A report from the manufacturer of the Containment – Post LOCA – Area Monitors, R-6576A and R-6576B (1AM106, 1AM107), identifies a common problem with the radiation monitors' power supplies and both are declared INOPERABLE.

Referring to the attached Technical Specifications, what is the maximum time the unit can remain at full power with the monitors INOPERABLE and comply with the applicable ACTION statement?

A. 1 hour

B. 72 hours

C. 7 Days

D. Indefinitely

PINK PAGE

INSTRUMENTATION

3/4.3.3 MONITORING INSTRUMENTATION

RADIATION MONITORING FOR PLANT OPERATIONS

LIMITING CONDITION FOR OPERATION

3.3.3.1 The radiation monitoring instrumentation channels for plant operations shown in Table 3.3-6 shall be OPERABLE with their Alarm/Trip Setpoints within the specified limits.

APPLICABILITY: As shown in Table 3.3-6.

ACTION:

a. With a radiation monitoring channel Alarm/Trip Setpoint for plant operations exceeding the value shown in Table 3.3-6, adjust the Setpoint to within the limit within 4 hours or declare the channel inoperable.

b. With one or more radiation monitoring channels for plant operations inoperable, take the ACTION shown in Table 3.3-6.

c. The provisions of Specification 3.0.3 are not applicable.

SURVEILLANCE REQUIREMENTS

4.3.3.1 Each radiation monitoring instrumentation channel for plant operations shall be demonstrated OPERABLE by the performance of the CHANNEL CHECK, CHANNEL CALIBRATION and DIGITAL CHANNEL OPERATIONAL TEST for the MODES and at the frequencies shown in Table 4.3-3.

SA4 91

128

39a

TABLE 3.3-6

RADIATION MONITORING INSTRUMENTATION FOR PLANT OPERATIONS

FUNCTIONAL UNIT	CHANNELS TO TRIP/ALARM	MINIMUM CHANNELS OPERABLE	APPLICABLE MODES	ALARM/TRIP SETPOINT	ACTION
1. Containment					
a. Containment - Post LOCA - Area Monitor	1	2	All	≤ 10 R/h	27
b. RCS Leakage Detection					
1) Particulate Radioactivity	N.A.	1	1, 2, 3, 4	N.A.	26#
2) Gaseous Radioactivity	N.A.	1	1, 2, 3, 4	N.A.	26#
2. Containment Ventilation Isolation					
a. On Line Purge Monitor	1	2	1, 2, 3, 4	*	23
b. Manipulator Crane Area Monitor	1	2	6##	**	23
3. Main Steam Line	1/steam line	1/steam line	1, 2, 3, 4	N.A.	27
4. Fuel Storage Pool Areas					
a. Fuel Storage Building Exhaust Monitor	N.A.	1	***	****	25
5. Control Room Isolation					
a. Air Intake-Radiation Level					
1) East Air Intake	1/intake	2/intake	All	****	24
2) West Air Intake	1/intake	2/intake	All	****	24
6. Primary Component Cooling Water					
a. Loop A	1	1	All	< 2 x Background	28
b. Loop B	1	1	All	< 2 x Background	28

TABLE NOTATIONS

* Two times background; purge rate will be verified to ensure compliance with Specification 3.11.2.1 requirements.
** Two times background or 15 mR/hr, whichever is greater.
*** With irradiated fuel in the fuel storage pool areas.
**** Two times background or 100 CPM, whichever is greater.
\# The provisions of Specification 3.0.4 are not applicable.
During CORE ALTERATIONS or movements of irradiated fuel within the containment.

PINK PAGE

396

6A3

91

129

TABLE 3.3-6 (Continued)

ACTION STATEMENTS

ACTION 23 - With less than the Minimum Channels OPERABLE requirement, operation may continue provided the containment ventilation isolation valves are maintained closed.

ACTION 24 - With the number of OPERABLE channels one less than the Minimum Channels OPERABLE requirement, within 1 hour initiate and maintain operation of the Control Room Emergency Ventilation System in the recirculation mode of operation.

ACTION 25 - With less than the Minimum Channels OPERABLE requirement, operation may continue for up to 30 days provided an appropriate portable continuous monitor with the same Alarm Setpoint is provided in the fuel storage pool area. Restore the inoperable monitors to OPERABLE status within 30 days or suspend all operations involving fuel movement in the fuel storage pool areas.

ACTION 26 - Must satisfy the ACTION requirement for Specification 3.4.6.1.

ACTION 27 - With the number of OPERABLE Channels less than the Minimum Channels OPERABLE requirement, initiate the preplanned alternate method of monitoring the appropriate parameter(s), within 72 hours, and:

1) either restore the inoperable Channel(s) to OPERABLE status within 7 days of the event, or

2) prepare and submit a Special Report to the Commission pursuant to Specification 6.8.2 within 14 days following the event outlining the actions taken, the cause of the inoperability and the plans and schedule for restoring the system to OPERABLE status.

ACTION 28 - With the number of OPERABLE Channels less than the Minimum Channels OPERABLE requirement, collect grab samples daily from the Primary Component Cooling Water System and the Service Water System and analyze the radioactivity until the inoperable Channel(s) is restored to OPERABLE status.

6B2 91 130

39c

TABLE 4.3-3

RADIATION MONITORING INSTRUMENTATION FOR PLANT OPERATIONS SURVEILLANCE REQUIREMENTS

FUNCTIONAL UNIT	CHANNEL CHECK	CHANNEL CALIBRATION	DIGITAL CHANNEL OPERATIONAL TEST	MODES FOR WHICH SURVEILLANCE IS REQUIRED
1. Containment				
a. Containment - Post LOCA - Area Monitor	S	R	Q	All
b. RCS Leakage Detection				
1) Particulate Radioactivity	S	R	Q	1, 2, 3, 4
2) Gaseous Radioactivity	S	R	Q	1, 2, 3, 4
2. Containment Ventilation Isolation				
a. On Line Purge Monitor	S	R	Q	1, 2, 3, 4
b. Manipulator Crane Area Monitor	S	R	Q	6#
3. Main Steam Line	S	R	Q	1, 2, 3, 4
4. Fuel Storage Pool Areas				
a. Radioactivity-High-Gaseous Radioactivity	S	R	Q	*
5. Control Room Isolation				
a. Air Intake Radiation Level				
1) East Air Intake	S	R	Q	All
2) West Air Intake	S	R	Q	All
6. Primary Component Cooling Water				
a. Loop A	S	R	Q	All
b. Loop B	S	R	Q	All

TABLE NOTATIONS

* With irradiated fuel in the fuel storage pool areas.
\# During CORE ALTERNATIONS or movement of irradiated fuel within the containment.

PINK PAGE

Technical Clarification

SECTION I - REQUEST FOR CLARIFICATION

Originator: J. Connolly (Rev. 01) Date: 02/01/99

Technical Clarification Title: COP Monitor Setpoints

Technical Clarification No.: TS-091 (Rev.01)

Type of Clarification: Tech Spec (TS) ☒ Licensing (LS) ☐

REQUEST FOR CLARIFICATION: (Attempt to state the request as a question.)

The COP monitor setpoints are required to be set at "less than or equal to" 2X background. To determine this setpoint, flow must be present in the COP system.

Is it permissible to open the purge supply and exhaust isolation valves, prior to determining this setpoint, for the purpose of determining the background?

CONCURRENCE: J M Rinehart Group Manager 2/16/99 Date

SECTION II - INITIATION

RECEIVED BY REGULATORY COMPLIANCE: M E Regulatory Compliance Supervisor 2/16/99 Date

(Continued)

39e

Technical Clarification

SECTION III -EVALUATION

The setpoint for the COP monitors is required to be set at less than or equal to 2X background (less than or equal to 2X the value at the start of purging). To determine this value, the COP system must be in operation. It is therefore permissible to open the purge supply and exhaust isolation valves and initiate system operation (for a period of up to 1 hour) prior to determining this setpoint, provided that actions to determine the setpoint are pursued without delay and in a controlled manner, and that during this period, the monitors remain in operation utilizing a setpoint which will provide system actuation if required.

Another acceptable method to determine the initial setpoint is described in Health Physics Study / Technical Information Document (HPSTID) 98-007 "Containment On-line Purge (COP) Radiation Monitor Response to Noble Gases" which can be used to provide a method to estimate the response of the Containment On-Line Purge (COP) Radiation Monitors (RM-6527A and RM-6527B) to concentrations of routinely purged noble gasses from containment. An estimated response to the gas concentration in containment can be combined with the pre-purge (ambient) background value of the monitors to determine the monitor setpoints prior to initiating purging operations.

The initial setpoint should be established by Operations and Health Physics personnel.

REFERENCE: T.S. 3.3.2, Table 3.3-3, Item 3.c.4

T.S. 3.3.3.1, Table 3.3-6, Item 2.a

Prepared By: James W. Connolly 2/16/99 (Date) Concurrence: 2/16/99 Cognizant Group Manager (Date)

SECTION IV - REVIEW AND APPROVAL

(Check Appropriate Boxes)

☒	Regulatory Compliance Manager 2/16/99 (Date)	☐	(Date)
☒	Station Director (Date)	☐	2/17/99 (Date)
☒	(Date)	☐	(Date)
		☐	(Date)

SORC MEETING NO.: 99-017 DATE: 2/17/99

39f

Technical Clarification
TS-091 (Rev. 01)

Background:

The Containment On-Line Purge (COP) system is primarily used to purge the containment atmosphere periodically during plant operation and to reduce the airborne activity levels in the containment. The COP system replenishes the containment structure atmosphere with fresh outside air and directs potentially contaminated air to the normal exhaust air cleaning unit in the Primary Auxiliary Building. The COP system containment isolation valves (COP-V1, COP-V2, COP-V3 and COP-V4) satisfy containment isolation requirements by automatically closing when a containment ventilation isolation signal (CVIS) is generated when any one of the following conditions occurs:

- An "S" signal is generated,
- Containment Spray is manually initiated,
- Phase "A" isolation is manually initiated, or
- High Radiation is detected by the COP exhaust line radiation monitors (RM-6527A, or RM-6527B).

The COP system exhaust line radiation monitors monitor the air quality of the containment building via the containment purge exhaust. A two-of-two detector logic is used, where by both detectors on a per train basis, must be in high alarm to provide a CVIS. During COP system operation, the radiation monitor trip setpoint is required to be set at less than two times the background radiation levels as required by Technical Specification Table 3.3-4.

In order to reliably set the alert and high setpoints for the COP exhaust line radiation monitors, it is necessary to establish air flow through the COP system exhaust lines. It has been past practice (per OS1023.69 "Containment On-Line Purge System Operation") to establish the alert and high setpoints at 1×10^5 Counts Per Minute (CPM) until the background levels for the COP exhaust line radiation monitors could be established. This level has been considered conservative enough to provide system isolation if required during the system start-up period (less than 1 hour of operation). Once background levels are determined, the alert and high alarm setpoints can be calculated and the setpoints adjusted as appropriate to meet the requirements of the Technical Specifications.

In order to provide a more realistic setpoint for the generation of a CVIS prior to the start-up of the COP system, a Health Physics Study / Technical Information Document (HPSTID 98-007) "Containment On-line Purge (COP) Radiation Response to Noble Gases" was developed by the Health Physics Department. This HPSTID provides a method to estimate the response of the Containment On-Line Purge (COP) Radiation Monitors (RM-6527A and RM-6527B) to concentrations of routinely purged noble gasses from containment. An estimated response to the gas concentration in containment can be combined with the pre-purge (ambient) background value to determine the monitor setpoint prior to initiating purging operations.

TECHNICAL CLARIFICATION

* * * * SECTION I - REQUEST FOR CLARIFICATION * * * *

Originator: W. NICHOLS Date: 3/25/91

Technical Clarification No.: TS-142

Type of Clarification:

TechSpec ☒ FSAR(Excluding 17.2) ☐ FSAR 17.2 ☐ Other Licensing ☐

DESCRIPTION OF ISSUE:(Include research information and identified differences that require resolution.)

Technical Specifications 4.3.2.1, 4.3.3.1, 4.3.3.9 and 4.3.3.10 require periodic surveillance testing of the Radiation Data Management System (RDMS). Part of the surveillance testing requires the performance of a Digital Channel Operational Test (DCOT) on each channel.

During the performance of the DCOT the alarm/trip setpoint is reduced below the background radiation level in order to verify alarms and any associated trips & interlocks actuate properly.

Does lowering of the channel setpoint below the background radiation level ALARM/TRIP SETPOINT values stated in T.S. Table 3.3-6 cause the channel to be inoperable?

CONCURRENCE: _____ Group Manager 4/15/91 (Date)

* * * * SECTION II - INITIATION * * * *

RECEIVED REGULATORY COMPLIANCE: _____ Lead Engineer - Compliance 3/27/91 (Date)

GROUP MANAGER ASSIGNED: JM Peschel (Name/Dept) (Date)

NYRE FORM 2-4A
Rev. 24
Page 1 of 2

39h

* * * * SECTION III - EVALUATION * * * *

ANSWER: NO.

The temporary lowering of a RDMS channel setpoint, by RDMS data base manipulation to verify alarm/trip functions, does not prevent the channel from continuously monitoring radiation levels (except WRGM). Additionally, when the setpoint is lowered below background radiation levels the associated trip functions will actuate equipment in their required operating mode as if a high radiation condition exists. The channel remains OPERABLE because monitoring and associated trip functions are not inhibited.

Therefore, during performance of a RDMS channel DCOT, the LCO remains satisfied. Entering an ACTION statement is not appropriate nor required (except for WRGM DCOT). However, because the channel is in alarm status, increased operator vigilance is required to note any increase in radiation levels during the DCOT surveillance period and to take remedial actions if required.

See attached background information, particularly for WRGM DCOT and ACTION statement applicability.

Prepared By: 3/29/91 (Date) Concurrence: 4/10/91 Cognizant Group Manager (Date)

* * * * SECTION IV - REVIEW AND APPROVAL * * * *

Check Appropriate Boxes

☒ 4/11/91 Regulatory Compliance Manager (Date)	☒ 4/15/91 Maintenance Manager (Date)
☒ April 17, 1991 Operations Manager (Date)	☒ 3/27/91 Lead Engineer - Compliance (Date)
☐ Chemistry and Health Physics Manager (Date)	☒ 5/8/91 Station Manager (Date)
☒ 4/23/91 Technical Support Manager (Date)	☐ (Date)

SORC MEETING NO.: 91-76 DATE: 5/8/91

APPROVED BY: 5/14/91
Executive Director - Nuclear Production (Date)

391

BACKGROUND INFORMATION CONCERNING RADIATION MONITORING DATA SYSTEM CHANNEL OPERABILITY DURING DCOT SURVEILLANCES

The Radiation Data Management System (RDMS) is a digital computer-based radiation monitoring system. The system consists of multiple channels for monitoring radiation levels in designated areas and process streams. When radiation levels exceed a pre-determined setpoint, the RDMS will initiate alarms and/or trip actuations.

Technical Specifications 4.3.2.1, 4.3.3.1, 4.3.3.9 and 4.3.3.10 require periodic surveillance testing of channels associated with the Radiation Data Management System (RDMS). Part of the surveillance testing requires the performance of a Digital Channel Operational Test (DCOT) on each channel designated within the Technical Specifications.

The DCOT is performed by manipulating the database to temporarily lower the setpoint on the channel being tested to a value which is lower than the radiation level (background) being sensed by the monitor. Lowering the setpoint provides the requisite verification that the channel alarms, trips and/or interlocks are operational. Upon completion of the DCOT the channel setpoint is returned to its required setpoint as specified by the Technical Specifications.

When radiation is detected each RDMS channel conditions the signal from its detector(s) for proper input to an RM-80 microprocessor. The microprocessor mathematically manipulates the conditioned signal within the microprocessor data base to arrive at a radiation value. The data base (i.e., radiation value) is then continuously compared to a selected digital setpoint value within the microprocessor. When the radiation value is higher than the setpoint value the microprocessor executes additional instructions to a control system to perform alarming and/or tripping functions. Since the setpoint is a digital value within the microprocessor data base, the setpoint can be altered by operator manipulation of the data base. By intentionally lowering a RDMS channel setpoint to below the continuously updated radiation value within the data base the alarm and/or trip functions can be verified. Therefore, the temporary lowering of the setpoint does not inhibit the channel from continuously monitoring radiation levels (except WRGM) or performing any associated trip functions. Additionally, when the setpoint is lowered below background radiation levels the associated trip functions will actuate equipment in their required "safe" operating mode as if a high radiation condition (i.e., above the setpoint) exists.

From the above statements, the RDMS channel(s) remains OPERABLE because monitoring and associated trip functions are not inhibited when setpoint changes are made. Therefore, during performance of a RDMS channel DCOT (except WRGM) the RDMS channel remains OPERABLE.

The ALARM/TRIP SETPOINT values given in T.S. Table 3.3-6 are maximum values that specific RDMS channel setpoints can be adjusted. Therefore, temporarily lowering the channel setpoint(s) below the ALARM/TRIP SETPOINT value is a temporary adjustment in the conservative direction (i.e., the alarm/trip functions occur sooner) and; coupled with the above statement that the channel remains OPERABLE even when lowering the setpoint, the Limiting Condition for Operation (LCO) for the channel under test remains satisfied. Thus, entering an ACTION statement during a DCOT for RDMS channels is not appropriate nor required, except when a WRGM DCOT is performed.

The WRGM consists of two flow paths with three detection channels for low, medium and high range radiation monitoring of the plant vent stack. During normal operation, the low range (high flow) path is used and the mid/high range (low flow) path is shut down. As activity increases above a pre-determined setpoint, the mid/high range path is automatically placed into operation. If activity levels continue to increase through the mid range, the low range path is automatically isolated and purged (to minimize activity buildup in the sample skid). During the WRGM DCOT, the low range detector path, which monitors normal radiation background levels, will become inoperable in order to test the mid/high range channel functions. Therefore, during the WRGM DCOT the appropriate ACTION statement must be entered until the low range path is placed back in service.

39j

It should be noted that whenever the setpoint is lowered below the background radiation value the channel will be in alarm status. Therefore, increased operator vigilance is required to note any increase in radiation levels during the DCOT surveillance period and to take remedial actions if required.

RNL

39k

TECHNICAL CLARIFICATION

*** * * * SECTION I - REQUEST FOR CLARIFICATION * * * ***

Originator: R. C. Stenrift Date: 5/20/91

Technical Clarification No.: TS-149

NOT IMPORTANT WHO 7/24/91

Type of Clarification:

TechSpec [X] FSAR(Excluding 17.2) [ ] FSAR 17.2 [ ] Other Licensing [ ]

DESCRIPTION OF ISSUE: (Include research information and identified differences that require resolution.)

Tech Spec 3/4 3.3 and Table 3.3-6 Require the Manipulator Crane Area Radiation Monitor to be in operation in mode 6, during core alterations or movements of irradiated fuel within the containment. This Spec. also requires an alarm set point of 15 mR/hr or 2 times background, whichever is greater. Definition 1.9 describes a core alteration as the movement or manipulation of any "component" within the reactor pressure vessel with the head removed and fuel in the vessel. NHY Technical Interpretation TI-004 further clarifies "component" to mean any material that could alter core reactivity to significantly reduce shutdown margin or posses sufficient mass to possibly challenge fuel integrity if mishandled.

Prior to head removal, dose rates at the detector location will be low - perhaps <5 mR/hr, and the setpoint of 15 mR/hr will apply. During head removal, the upper internals will be exposed, and the dose rates at the detector location will rise to an unpredictable level (estimate is 100 mR/hr). As the cavity is flooded and covers the upper internals, dose rates are expected to return to <5mR/hr.

1. Can the radiation monitor be taken out of service during head removal? (Failure to do so would trip the alarm, actuating containment isolation. It is beneficial to have containment purge in operation during this operation to control containment airborne radioactivity.)
2. If the monitor can be removed from service during head removal, would it have to be placed back in service during cavity flooding (due to potential reactivity changes)?
3. During upper internals removal, we may see a similar increase in dose rates. Is upper internals movement considered a core alteration? If it is considered a core alteration, can the alarm set point be set to expected values based on the exposed upper internals condition?
4. Following core re-load, is the monitor required to be in service during cavity draindown? (Upper internals will again be exposed, increasing dose rates above the 15 mR/hr set point) If it is, can the alarm set point be set to the values expected based on initial draindown?

CONCURRENCE: Joseph J. Rafalowski, Group Manager 5/23/91 (Date)

*** * * * SECTION II - INITIATION * * * ***

RECEIVED REGULATORY COMPLIANCE: [signature] for ATL, Lead Engineer - Compliance 5/24/91 (Date)

GROUP MANAGER ASSIGNED: J. M. Peschel (Name/Dept) (Date)

392

* * * * SECTION III - EVALUATION * * * *

ANSWER:

1) The reactor vessel head is not an internal component within the reactor vessel and as such, its removal is not considered a CORE ALTERATION. Therefore, the Manipulator Crane Area Radiation Monitor may be disabled during reactor vessel head removal operations.

2) Flooding of the reactor cavity with borated water from the RWST that is within Technical Specification boron concentration limits is not considered an evolution that could alter core reactivity to significantly reduce shutdown margin. Therefore, the Manipulator Crane Area Radiation Monitor is not required to be in service during reactor cavity flooding.

3) During reactor cavity drain down, it would be prudent to have the Manipulator Crane Area Radiation Monitor inservice. The setpoint on the monitor may be established based on the expected radiation levels which were previously experienced during head removal and cavity fill.

4) The upper internals package is an internal component within the reactor vessel. Its removal and reinstallation is considered a CORE ALTERATION whenever fuel is in the reactor vessel and the upper internals package

(Continued on next page)

Prepared By: _____ 7/23/91 (Date) Concurrence: _____ 7/23/91 Cognizant Group Manager (Date)

* * * * SECTION IV - REVIEW AND APPROVAL * * * *

Check Appropriate Boxes

☐ _____ 7/23/91 Regulatory Compliance Manager (Date)	☐ _____ Maintenance Manager (Date)
☐ _____ 7/23/91 Operations Manager (Date)	☐ _____ Lead Engineer - Compliance (Date)
☐ _____ 7/23/91 Chemistry and Health Physics Manager (Date)	☐ _____ 7/24/91 Station Manager (Date)
☐ _____ 7/23/91 Technical Support Manager (Date)	☐ _____ 7/23/91 (Date)

SORC MEETING NO.: 91-118 DATE: 7-24-91

APPROVED BY: _____ 8/1/91
Executive Director - Nuclear Production (Date)

39m

is not fully seated within the reactor vessel, and while the upper internals package is directly above the fuel assemblies. Thus, the Manipulator Crane Area Radiation Monitor must be in service during movement of the upper internals package until the upper internals package is no longer above the fuel assemblies.

5) Technical Specification 3/4.3.3 allows the setpoint to be adjusted to 15 mR/hr or 2 times above background whichever is greater. Thus, the setpoint may be adjusted to expected radiation values based on previous experience. Furthermore, the setpoint may be adjusted at different values (based on previous experience) for various evolutions which are known to significantly alter surrounding background radiation levels, provided the setpoint changes are procedurally controlled to coincide with the evolutions in progress.

BACKGROUND INFORMATION CONCERNING DISABLEMENT OF MANIPULATOR CRANE AREA RADIATION MONITOR DURING REFUELING ACTIVITIES

The Health Physics Department requested a technical clarification of Technical Specification 3.3.3.1, Radiation Monitoring for Plant Operations, as to what refueling operations are considered a CORE ALTERATION and whether the Containment Manipulator Crane Area Monitor High Radiation signal to the Engineered Safeguards Features Actuation System (ESFAS) can be disabled or setpoints readjusted to prevent automatic actuation/isolation of containment ventilation systems during refueling evolutions which are known to significantly alter background radiation levels.

During refueling operations the Containment Manipulator Crane Area Monitor-Channels 6535 A and B is in service to monitor general background radiation levels within the containment building. In the event of a fuel handling accident, these detector channels in conjunction with safeguards actuation signals will isolate the containment online and offline purge isolation valves, and trip the containment pre-entry, refueling supply and containment online purge fans when background radiation levels exceed the predetermined setpoint. However, certain refueling activities such as reactor head removal, reactor cavity filling and draining evolutions, etc., can significantly alter general background radiation levels which can exceed the setpoints of the radiation monitoring instrument channels.

CORE ALTERATION is defined in the Technical Specifications as the movement or manipulation of any component within the reactor pressure vessel with the vessel head removed and fuel in the vessel. NHY Technical Interpretation TI-004 was issued to clarify the word "component" as any material that could alter core reactivity to significantly reduce shutdown margin or possesses sufficient mass to possibly challenge fuel integrity if mishandled. It can be inferred from the definition and technical interpretation that a component possessing sufficient mass within the reactor vessel only would be considered a CORE ALTERATION.

Removal of the reactor vessel head is not considered a CORE ALTERATION since the reactor vessel head is not an internal component within the reactor vessel. It is recognized that the reactor vessel head does have sufficient mass which could challenge fuel integrity if mishandled, however, per NUREG-0612, Control of Heavy Loads at Nuclear Power Plants, a drop of the reactor vessel head could impact the reactor vessel flange, but not directly challenge fuel integrity (inferred), and potentially damage the reactor vessel itself and lead to uncovering the fuel if sufficient leakage resulted beyond water makeup capability. Since dropping of the reactor vessel head would not crush the core, manipulation of the reactor vessel head is not considered a CORE ALTERATION, therefore, the Containment Manipulator Crane Area Monitor may be disabled during removal of the reactor vessel head. In addition, per the definition, CORE ALTERATION can only occur after the reactor vessel head is removed.

The upper internals package is an internal component within the reactor vessel that possesses sufficient mass that could challenge fuel integrity if mishandled. Additionally, past events in the industry as documented in NRC Information Notice 90-77: Inadvertent Removal of Fuel Assemblies From the Reactor Core, identify events where fuel assemblies were attached to the

upper internals package during removal operations of the upper internals package. Any inadvertent removal of a fuel assembly would constitute a change in core reactivity.

Therefore, whenever the upper internals package is not fully seated within the reactor vessel and while the upper internals package is directly above the fuel assemblies the Containment Manipulator Crane Area Monitor must be in service during movement of the upper internals package until the upper internals package is no longer above the fuel assemblies.

Flooding of the reactor cavity with borated water from the refueling water storage tank (RWST) that is within Technical Specification boron concentration limits is not considered an evolution that could alter core reactivity to significantly reduce shutdown margin. Therefore, the Containment Manipulator Crane Area Monitor may be disabled during reactor cavity flooding.

During reactor cavity drain down, it would be prudent to have the Manipulator Crane Area Radiation Monitor inservice. The setpoint on the monitor may be established based on the expected radiation levels which were previously experienced during head removal and cavity fill.

Technical Specification 3.3.3.1 Table 3.3-6 allows the Containment Manipulator Crane Area Monitor setpoint to be adjusted to 15 mR/hr or 2 times above background whichever is greater. Thus, the setpoint may be adjusted to expected radiation values based on previous experience. . Furthermore, the setpoint may be adjusted at different values (based on experience gained) for various evolutions which are known to significantly alter surrounding background radiation levels, provided the setpoint changes are procedurally controlled to coincide with the evolutions in progress.

TECHNICAL CLARIFICATION

SECTION I - REQUEST FOR CLARIFICATION

Originator: D.A.ROBINSON Date: OCTOBER 27, 1992

Technical Clarification Title: Service Water System sampling when PCCW Rad. Monitor(s) is (are) out of service.

Technical Clarification No.: TS-174

Type of Clarification:

Tech Spec [X] (TS) FSAR(Excluding 17.2) [ ] (FS) FSAR 17.2 [ ] (QS) Licensing [ ] (LS)

REQUEST FOR CLARIFICATION: (Attempt to state the request as a question.)

Tech. Spec. 3.3.3.1, 3.3.3.9, and ODCM PART A, Section 3.0, Table A3.1 Item D, Note 7 require sampling of the PCCW and SW systems for gamma activity for leak detection when the Radiation Monitor(s) (1-RM-6515 or 1-RM-6516) is (are) Inoperable.

When PCCW is shutdown and or drained the PCCW System is monitored utilizing the guidance in Technical Clarification No. TS-83.

When Service Water is drained a sample from the PCCW/SW Heat Exchanger effluent is unavailable. What action is required when the Service Water side of the PCCW/SW Heat Exchanger is drained.

CONCURRENCE: W.B. [signature] 10/28/92
Group Manager (Date)

SECTION II - INITIATION

RECEIVED REGULATORY COMPLIANCE: [signature] 11/13/92
Lead Engineer - Compliance (Date)

GROUP MANAGER ASSIGNED: J.M. Pesche
(Name/Dept) (Date)

NYRE FORM 2-4A
Rev. 27
Page 1 of 2

39p

SECTION III - EVALUATION

The following actions are required when the Service Water side of the Primary Component Cooling Water (PCCW) Heat Exchanger is drained and grab samples of the Service Water System are required:

a. Grab samples from the Service Water System will be obtained at the frequencies specified in Technical Specification 3.3.3.1, 3.3.3.9, and the Offsite Dose Calculation Manual as the Service Water System is being drained until obtaining these samples is not physically possible.

b. Grab samples are not required once the Service Water System is drained such that it is not physically possible to obtain the samples.

c. When refilling the Service Water System, grab samples shall resume as soon as physically possible, at the intervals specified in the aforementioned sources, and continue until the PCCW radiation monitors (1-RM-6515 and 1-RM-6516) are OPERABLE.

Sampling of the PCCW system with the Service Water system drained and the PCCW system in operation shall continue per the requirements of Technical Specifications 3.3.3.1 and 3.3.3.9 and the guidance of Technical Clarification TS-083.

Prepared By: [signature] 12/1/92 (Date) Concurrence: [signature] 12/1/92 Cognizant Group Manager (Date)

SECTION IV - REVIEW AND APPROVAL

(Check Appropriate Boxes)

[] [signature] 12/1/92 Regulatory Compliance Manager (Date)	[] _____ (Date)
[] [signature] 12-7-92 Station Manager (Date)	[] _____ (Date)
[] _____ (Date)	[] _____
	[] _____ (Date)

SORC MEETING NO.: 92-220 DATE: 12-7-92

APPROVED BY: [signature] 2/2/93
Executive Director - Nuclear Production (TS) (Date)

_____
Executive Director - Engineering and Licensing (FS) (Date)

_____
Director of Licensing Services (LS) (Date)

_____
Director of Quality Programs (QS) (Date)

398

Page 3 of 3
TS-174

BACKGROUND INFORMATION FOR TS-174

The purpose of the plant radiation monitors is to sense radiation levels in selected plant systems and locations and determine whether or not predetermined limits are being exceeded. In the case of the Primary Component Cooling Water (PCCW) loops, the radiation monitors (1-RM-6515 and 1-RM-6516) sense radiation in the PCCW system which could leak into the Service Water System and be discharged to the environment via the multiport diffuser. Per Technical Specification 3.11.1.1, the concentration of radioactive material released in liquid effluents at the point of discharge from the multiport diffuser must be within specified limits. This limitation provides assurance that the levels of radioactive materials in unrestricted areas will not pose a threat to the health and safety of the public.

Based on the importance of maintaining radioactive effluent releases within limits that guarantee the health and safety of the public will not be at risk, the PCCW radiation monitors are required to be in operation at all times. When a radiation monitor is inoperable, grab samples from the PCCW and Service Water systems must be obtained and analyzed as a compensatory measure in accordance with Technical Specification 3.3.3.1, Table 3.3-6 Action 28, Technical Specification 3.3.3.9, Table 3.3-12, Action 32, and Part A, section 3.0 of the Offsite Dose Calculation Manual. If the service water system is drained, there is no potential for inadvertent radioactive liquid effluent release through the service water system to the environment via the multiport diffuser. Thus, when the system is drained there is no need to obtain the grab sample. However, when the system is being filled, grab samples must be obtained as soon as possible to ensure that the water discharged to the environment is in compliance with Technical Specification 3.11.1.1.

The purpose of the PCCW monitors is to detect radioactivity indicative of a leak from the Reactor Coolant System or from one of the other radioactive systems which exchange with the PCCW System. These monitors are required to be operable at all times. Grab samples of PCCW are required when the PCCW monitors are not operable. Since the purpose of obtaining the PCCW samples is to provide an indication of a leak of radioactive liquid into the PCCW system, draining of the Service Water system does not remove the reason for obtaining the PCCW grab samples. These samples shall be obtained as specified in Technical Specifications 3.3.3.1 and 3.3.3.9. See Technical Clarification TS-083 for further guidance concerning PCCW grab samples.

This determination is consistent with the Bases for Technical Specifications 3.3.3.1, 3.3.3.9, and 3.11.1.1.

39r

Question 40

Plant conditions:

- A small break LOCA has occurred.
- The crew is currently performing the actions of ES-1.2, POST LOCA COOLDOWN AND DEPRESSURIZATION.
- All critical safety functions are satisfied with the exception of containment (Z) which has a YELLOW terminus based on post accident monitor radiation >10 Rem/hr.
- With an RCS cooldown in progress the Unit Supervisor refers to FR-Z.3, RESPONSE TO HIGH CONTAINMENT RADIATION LEVEL.

What mitigating actions are directed by this procedure?

A. FR-Z.3 directs that the Containment Online Purge (COP) system be placed in service to cleanup the containment atmosphere.

B. FR-Z.3 directs performance of a containment bleed through the Combustible Gas Control System to the Enclosure Air Handling Filter units.

C. FR-Z.3 directs that the Containment Recirculation Filter System be placed in service in the "Filter" mode.

D. FR-Z.3 directs that the Containment Air Purge (CAP) system be placed in service in the refueling purge mode.

Question 41

The plant is in MODE 6. You are assigned as the Refueling SRO in containment.

- Fuel moves are in progress.
- There is a spent fuel assembly in the refueling machine mast.
- Refueling Cavity level has been DECREASING at approximately 0.5 inches per minute due to a failed RHR suction relief valve.
- Refueling Cavity level is currently 17 feet above the reactor vessel flange and DECREASING.

In accordance with OS1215.05, LOSS OF REFUELING CAVITY WATER, where do you direct the refueling machine operator to place the spent fuel assembly?

A. In any core location

B. In the RCCA change fixture

C. In the upender in a vertical position

D. In the transfer canal with the refueling machine mast fully extended

Question 42

Plant conditions:

- The plant has tripped due to a spurious closure of the MSIVs.
- The crew has transitioned from E-0, REACTOR TRIP OR SAFETY INJECTION, to ES-0.1, REACTOR TRIP RESPONSE.
- 'A', 'B', & 'C' Steam Generator pressures are approximately 1125 psig with pressure being controlled by their respective ASDVs.
- The ASDV for the 'D' S/G has failed and cannot be controlled from the Control Room.
- The "S/G Safety Valve Open" alarm is in on VA3 and 'D' S/G pressure indicates approximately 1190 psig.
- The Shift Manager announces that all critical safety functions are satisfied with the exception of Heat Sink (H) which is YELLOW due to the elevated pressure in 'D' Steam Generator.

Which of the following is the procedure to be used to respond to this condition?

A. ES-0.1, REACTOR TRIP RESPONSE

B. FR-H.4, RESPONSE TO LOSS OF NORMAL STEAM DUMP CAPABILITIES

C. FR-H.2, RESPONSE TO STEAM GENERATOR OVERPRESSURE

D. E-2, FAULTED STEAM GENERATOR ISOLATION

Question 43

Which of the following is the minimum level that identifies a containment flooding condition?

A. Containment building level indicates greater than 5 feet.

B. Containment Sump 'A' off-scale high.

C. Containment Sump 'B' off-scale high.

D. Containment Building level indicates greater than 2.5 feet.

Question 44

During a reactor startup the Primary Board Operator is withdrawing shutdown Bank E.

Which of the following represents the speed at which the shutdown rods should be moving?

A. 32 Steps Per Minute

B. 48 Steps Per Minute

C. 64 Steps Per Minute

D. 72 Steps Per Minute

Question 45

Plant conditions:

- 90% power.
- A rapid power decrease is in progress due to increasing vibration levels on the 'A' RCP.
- RCP frame vibration spikes to 6 mils on MPCS color graphics and the BOP operator confirms this vibration level using hardwire instrumentation on MCB-GR.

What action is required be taken in accordance with OS1201.01, RCP MALFUNCTION?

A. Continue the rapid power decrease to drive power below P-8 then trip the RCP while manually controlling 'A' S/G level.

B. Place 'A' S/G main feed regulating valves to manual and feed the generator to 60% to 70% NR level. Trip the 'A' RCP and shutdown to MODE 3.

C. Trip the reactor and go to E-0, REACTOR TRIP OR SAFETY INJECTION, and immediately trip the 'A' RCP.

D. Trip the reactor and go to E-0, REACTOR TRIP OR SAFETY INJECTION, step 1. Trip the 'A' RCP after the immediate actions are complete.

Question 46

The operator is using main control board indications to perform a CVCS flow balance.

Assuming RCS temperature and pressurizer level are stable, which of the following describes the CVCS system flow balance?

A. Letdown + seal return = indicated charging flow + seal injection flow

B. Letdown + seal return = indicated charging flow

C. Letdown – seal injection flow = indicated charging flow

D. Letdown – seal injection flow = indicated charging flow + seal return flow

Question 47

Plant conditions:

- A reactor trip and safety injection has occurred.
- All Steam Generator Pressures are DECREASING
- Containment temperature, pressure, and humidity are INCREASING
- Tave is DECREASING
- Containment Pressure is currently NON-adverse

For this event, which of the following is designed to prevent the containment from exceeding its design pressure limit?

A. Containment Phase B Isolation

B. Main Steam Line Isolation

C. Containment Phase A Isolation

D. Feedwater Isolation

Question 48

The plant is at 88 % power. Control Bank 'D' Group Demand Counters indicate 228 steps.

Due to an Urgent Failure of DRPI Data 'B', the Accuracy Mode Selector Switch is placed in the DATA 'A' position.

How does this affect the OPERABILITY of Rod Position Indication?

A. Rod Position Indication is INOPERABLE. THERMAL POWER must be reduced to less than 50% of RATED THERMAL POWER within 8 hours.

B. Rod Position Indication is OPERABLE and capable of determining rod position within ± 12 steps.

C. Rod Position Indication is INOPERABLE. POWER OPERATION may continue as long as the affected rod positions are determined indirectly by the Incore Detector System within 8 hours.

D. Rod Position indication is OPERABLE and capable of determining rod position within ± 6 steps.

Question 49

The plant is at 7 % power during a plant startup. Intermediate Range channel N36 fails HIGH.

Which of the following describes the effect of the IR N36 failure?

A. The startup may continue after bypassing C-1 for IR N36.

B. The startup may continue after bypassing C-1 for IR N35 and IR N36.

C. The reactor must be placed in HOT STANDBY within 6 hours. P-6 will not automatically energize with IR N36 failed high.

D. The reactor will trip on High Intermediate Range Flux.

Question 50

Which of the following instruments provide input to Train 'B' of the RCS Subcooling Monitor?

A. RCS Wide Range Pressure instrument PT-403 and the average of all core exit thermocouples

B. RCS Wide Range Pressure instrument PT-405 and the auctioneered high core exit thermocouple

C. RCS Wide Range Pressure instrument PT-403 and the auctioneered high average quadrant temperature

D. RCS Wide Range Pressure instrument PT-405 and the auctioneered high average quadrant temperature

Question 51

Plant conditions:

- A LOCA is in progress.
- Containment pressure currently indicates 16 PSIG and decreasing slowly.
- Both trains of CBS are operating.
- The Containment pressure recorders indicate that pressure increased to a peak of 21 psig.
- All Containment Phase B penetrations are isolated and no safeguards actuation signals have been reset.

Which of the following indicates the expected status of Containment cooling systems?

A. Containment Structure Cooling fans are RUNNING; CRDM Cooling fans are RUNNING; Containment Recirculation fans are operating in the RECIRC MODE.

B. Containment Structure Cooling fans are TRIPPED; CRDM Cooling fans are RUNNING; Containment Recirculation fans are operating in the FILTER MODE.

C. Containment Structure Cooling fans are RUNNING; CRDM Cooling fans are TRIPPED; Containment Recirculation fans are operating in the FILTER MODE.

D. Containment Structure Cooling fans are TRIPPED; CRDM Cooling fans are TRIPPED; Containment Recirculation fans are operating in the RECIRC MODE.

Question 52

The plant has sustained a Large Break LOCA. The following conditions exist:

- Cold Leg ECCS Flow on SI-FI-917 indicates 900 gpm
- Safety Injection flow is 600 GPM in EACH train
- RHR flow is 3700 GPM in EACH train
- Train A CBS pump is running with discharge pressure at 190 psig
- Train B CBS pump did NOT start upon actuation of CBS

Assuming the RWST was at it's Tech Spec minimum level when the event occurred, approximately how much time will pass before initiation of swapover to Cold Leg recirculation?

A. 15 minutes

B. 30 minutes

C. 45 minutes

D. 60 minutes

Question 53

The plant is at 96 % power. All control systems are aligned for AUTOMATIC operation.

A 4.16KV bus 3 fault causes the incoming UAT feeder to bus 3 to trip open.

With NO operator action, which of the following describes the response of the plant?

A. The reactor will trip on LO-LO SG levels.

B. The alternate supply breaker to bus 3 from the RAT will close.

C. DG 'A' and 'B' will automatically start and supply busses E5 and E6.

D. The reactor will trip on Loss of RCS flow.

Question 54

OS1235.03, SG LEVEL INSTRUMENT FAILURE, contains the following CAUTION statement prior to step #1:
"During operation in manual feedwater control at ≥ 65% power, maintain Steam Generator water level 50% to 70% narrow range."

What is the basis for this CAUTION?

A. Limits the mass in the SGs with respect to the UFSAR steam break analysis.

B. Limits the mass in the SGs in consideration of SG overfill during a Steam Generator Tube Rupture Event.

C. Provides adequate mass to ensure iodine partitioning during a Steam Generator Tube Rupture Event.

D. Provides adequate mass to maintain heat sink during loss of all AC power.

Question 55

Plant conditions:

- A reactor trip has occurred due to a loss of offsite power. Safety Injection has actuated.
- The Emergency Diesels are powering their respective emergency 4160 V buses.
- Neither EFW pump is running
- The crew is carrying out the actions of FR-H.1, RESPONSE TO LOSS OF SECONDARY HEAT SINK, and has aligned the SUFP to bus E5.
- The BOP operator attempted to start the SUFP but the amber "Breaker Disagreement" light energized when the pump control switch was taken to START.

What caused the pump start failure?

A. The reactor trip breakers must be cycled before the pump will start.

B. RMO on bus E5 must be reset before the pump will start.

C. The Safety Injection signal must be reset before the pump will start.

D. The UAT or RAT breaker to bus E5 must be closed (EPS reset) before the pump will start.

Question 56

Plant conditions:

- A loss of offsite power has occurred.
- The 'B' Emergency Diesel Generator has failed to start.
- The 'A' Emergency Diesel Generator is powering bus E5.

Which of the following describes the expected electrical power flowpath to PP-1A, PP-1B, and PP-1F?

A. Bus E51→MCC E512→UPS-I-1A→PP-1A
Battery B-1B→DC bus 11B→UPS-I-1B→PP-1B
Battery B-1B→DC bus 11B→UPS-I-1F→PP-1F

B. Battery Charger BC-1A→DC bus 11A→UPS-I-1A→PP-1A
Bus E61→MCC E612→UPS-I-1B→PP-1B
Bus E61→MCC E612→UPS-I-1F→PP-1F

C. Battery B-1A→DC bus 11A→UPS-I-1A→PP-1A
Battery Charger BC-1B→DC bus 11B→UPS-I-1B→PP-1B
Battery B-1B→DC bus 11B→UPS-I-1F→PP-1F

D. Battery Charger BC-1A→DC bus 11A→UPS-I-1A→PP-1A
Battery B-1B→DC bus 11B→UPS-I-1B→PP-1B
Bus E63→MCC E631→480/120v transformer via Static Transfer switch→PP-1F

Question 57

Which of the following radiation monitors is both a release path monitor AND has an automatic isolation function associated with it?

A. 1GM810, Condenser Air Evacuation.

B. 1LM216, SG 'A' Blowdown Line Monitor

C. 1LM241, High Range Letdown Activity

D. 1LM220, PCCW Loop 'A'

Question 58

Plant conditions:

- The Waste Gas system is operating in the "Purge" mode of operation with gas being released to the plant vent via PAH-F-16.
- Processing of gas from a recent failed fuel event causes a high radiation condition.
- All radiation monitors in the system are in high alarm.

What automatic actions are expected to occur under these conditions?

A. RM-6503, Waste Gas Compressor Inlet Monitor, automatically closes WG-PCV-1491 isolating the 100 psig header.

B. RM-6502, Carbon Delay Bed Inlet Monitor, automatically closes VG-PCV-1713 isolating the inlet to the Carbon Delay Beds.

C. RM-6502, Carbon Delay Bed Inlet Monitor, automatically closes VG-V50 terminating purge release to PAH-F-16.

D. RM-6504 automatically closes WG-FV-1602 terminating the purge release to PAH-F-16.

Question 59

Which of the following plant AREA radiation monitors provides an automatic actuation function?

A. RM 6518, High Range Spent Fuel Pool

B. RM 6540, PAB Volume Control Tank Area

C. RM 6535A, Manipulator Crane Train 'A'

D. RM 6576A, Containment Post LOCA Train 'A'

Question 60

Plant conditions:

- The plant was at 100% power with all control systems in AUTOMATIC when the 'B' MFP tripped, inducing a turbine setback.
- The Unit Supervisor entered OS1231.03, TURBINE RUNBACK/SETBACK and OS1202.04, RAPID BORATION concurrently.
- The condenser steam dumps are operating as designed in response to the setback.
- Reactor power is currently 65% and decreasing.
- Control Bank 'D' rods are at 95 steps and inserting at 8 steps per minute.
- The ROD INSERTION LIMIT MONITOR indicates that the LO-LO insertion limit for Control Bank 'D' is 92 steps.
- D7762 CTL ROD BANK D INSERTION LIMIT LO-LO is still in ALARM on VA2.
- D7761 CTL ROD BANK D INSERTION LIMIT LOW is still in ALARM on VA2.

The primary side operator (PSO) recommends termination of the rapid boration.

What direction to the PSO is required in accordance with OS1202.04?

A. Continue rapid boration until the CTL ROD BANK D INSERTION LIMIT LOW alarm has RESET.

B. Continue rapid boration until the CTL ROD BANK D INSERTION LIMIT LO-LO alarm has RESET.

C. STOP the rapid boration and continue with normal boration until the CTL ROD BANK D INSERTION LIMIT LOW alarm has RESET.

D. PLACE the rod bank selector switch in MANUAL to stop insertion of control rods. When the CTL ROD BANK D INSERTION LIMIT LOW alarm has RESET, then stop the rapid boration.

Question 61

Plant conditions:

- All Containment Air Handling units are in service with the exception of CAH-FN-1F which is in Pull-to-Lock.
- A loss of offsite power causes a plant trip.
- The emergency diesel generators re-power their respective emergency buses.
- After the EPS loading sequence is complete a safety injection (SI) actuation occurs.

What is the present condition of the Containment Air Handling units as a result of these events?

A. All of the CAH fans that were previously running were restarted at step #3 of the EPS sequence.

B. All of the CAH fans that were previously running were restarted by the Safety Injection actuation.

C. To prevent an overload condition on the emergency buses the EPS started only CAH-FN-1A and CAH-FN-1C.

D. None of the CAH fans are running.

Question 62

Plant conditions:

- Stable at 100% power
- D5816-"Non-Vital Inst. Panel 5 Power Lost" annunciates on VA4.

What affect does a loss of power to ED-PP-5 have on the plant?

A. Loss of automatic operation of both PZR PORVs.

B. Loss of safeguards equipment actuation on an ESFAS signal.

C. Main feed pump speed control signals are lost and the pump recirculation valves fail open.

D. All main feed regulating valves fail closed.

Question 63

The plant has sustained a Small Break LOCA. The following conditions exist:

- PORV 456B is stuck OPEN, and has NOT been isolated
- RCS pressure is 1050 psig
- Core Exit Thermocouples are approximately 550°F
- All RCPs are TRIPPED.

Which of the following instruments will provide the most reliable indication of actual RCS inventory?

A. Pressurizer Hot-calibrated level instrument LT-459

B. Pressurizer Cold-calibrated level instrument LT-462

C. Reactor Vessel Dynamic Range Level (RVLIS)

D. Reactor Vessel Full Range Level (RVLIS)

Question 64

A Large Break LOCA has occurred. All safeguards equipment functioned as designed.

RWST LO-LO level alarm is actuated.

How will swapover to Cold Leg recirculation be performed?

A. Containment recirculation sump valves, CBS-V8 and CBS-V14, will automatically open. RWST suction valves, CBS-V2 and CBS-V5, will automatically close when the containment recirculation suction valves are fully open.

B. Containment recirculation sump valves, CBS-V8 and CBS-V14, will automatically open. RWST suction valves, CBS-V2 and CBS-V5, must be manually closed when the containment recirculation valves are open.

C. Containment recirculation sump valves, CBS-V8 and CBS-V14, must be manually opened. RWST suction valves, CBS-V2 and CBS-V5, must be manually closed.

D. Containment recirculation sump valves, CBS-V8 and CBS-V14, must be manually opened. RWST suction valves, CBS-V2 and CBS-V5, automatically close when the containment recirculation valves are open.

Question 65

Plant conditions:

- Reactor power is 75% and a power increase to 100% is in progress.
- All control systems are in AUTOMATIC.
- Backup heater group 'A' is selected to ON to force PZR spray. All other heater groups are in AUTO.
- Pressurizer pressure is 2235 psig and stable.
- A failure in the master pressure controller circuitry causes the controller setpoint to drift to 2300 psig.
- The failure has not yet been diagnosed by the crew.

Which of the following describes the INITIAL control system response to this condition?

A. PZR spray valves CLOSE and all PZR heater groups ENERGIZE.

B. PZR spray valves OPEN and all PZR heater groups except 'A' DE-ENERGIZE.

C. PZR spray valves CLOSE and all PZR heater groups except 'A' DE-ENERGIZE.

D. PZR spray valves OPEN and all PZR heater groups ENERGIZE.

Question 66

Plant conditions:

- MODE 2, 2% power, plant startup in progress
- Pressurizer pressure channel PT-455 has failed low.
- The crew has tripped all required bistables in accordance with OS1201.06, PRESSURIZER PRESSURE INSTRUMENT PT 455/458 FAILURE.
- Power is subsequently lost to PP-1B.

Which of the following describes the expected plant response to these events?

A. The plant trips due to LOW PRZ pressure or OPΔT, ONLY 'A' train SI actuates.

B. The plant trips due to HIGH PZR pressure or OTΔT, BOTH trains of SI actuate.

C. The plant trips due to LOW PZR pressure or OPΔT, BOTH trains of SI actuate.

D. The plant trips due to HIGH PZR pressure or OTΔT, ONLY 'A' train SI actuates.

Question 67

Plant conditions:

- MODE 1, 60% power.
- All control systems are in AUTOMATIC
- The controlling NR level channel on the 'A' SG has failed low
- The Unit Supervisor has entered OS1235.03, SG LEVEL INSTRUMENT FAILURE
- The 'A' main feed regulating valve (MFRV) controller will not shift into MANUAL.

What actions are directed by the procedure for this event?

A. Trip the reactor and go to E-0, REACTOR TRIP OR SAFETY INJECTION.

B. Immediately swap the 'A' SG controlling NR level channel to an alternate channel.

C. Control feedwater flow using main feed pump speed controllers while taking local control of the affected MFRV.

D. Control feedwater flow to the 'A' SG using the MFRV bypass valve.

Question 68

Plant conditions:

- A large break LOCA has occurred
- The crew is performing the actions of E-1, LOSS OF REACTOR OR SECONDARY COOLANT.
- Containment pressure peaked at 25 psig and is currently 16 psig and DECREASING slowly.
- All safeguards equipment is functioning as designed.
- Only SI has been RESET.
- A loss of off-site power occurs.

Which of the following describes the expected response of the containment structure recirculation filter fans (FN-3A & 3B)?

A. Neither fan re-starts because containment pressure is below 18 psig.

B. Both fans re-start when the Diesel Generator Breakers close onto buses E5 and E6 (step 0).

C. Neither fan re-starts because the SI signal is reset.

D. Both fans re-start when the EPS sequence is complete (Step 9).

Question 69

Plant conditions:

- Containment pressure is 15 psig.
- The crew is performing step #8 of FR-C.1, RESPONSE TO INADEQUATE CORE COOLING, which checks containment hydrogen concentration.

Why are the hydrogen recombiners NOT placed in service if hydrogen concentration is 4% or more?

A. This concentration is well below the lower flammability limit of hydrogen and recombiner operation is not required.

B. This concentration is at the explosive limit for hydrogen and a containment air purge is the preferred method for reducing hydrogen concentration.

C. Recombiner operation is not required as there is no relationship between high containment pressure and a containment challenge due to hydrogen burn.

D. Recombiner operation could cause a hydrogen burn resulting in a pressure spike, which may challenge Containment integrity.

Question 70

Plant conditions:

- MODE 1, 100% power
- D7251, CONTAINMENT PURGE PRESSURE HIGH alarms on VA2
- Containment pressure on COP-PI-1787 indicates 15.4 psia.
- A review of plant log information indicates that this appears to be a normal containment pressure rise due to hot summer weather conditions.

What action is required to be taken by the crew?

A. Place COP in service to reduce containment pressure and clear the alarm.

B. Place CAP in service to reduce containment pressure and clear the alarm.

C. Place the non-running Containment Structure Cooling Fan in service to reduce containment pressure and clear the alarm.

D. No action is required. Containment pressure is within the Technical Specification limits of 14.6 to 16.2 psia.

Question 71

The plant is in MODE 6 with CORE ALTERATIONS in progress.
RM-6527A-1, TRN A channel 1, Containment ~~Building Purge Line~~ monitor has been declared INOPERABLE. ONLINE PURGE TRAIN-A ~~(COP TRAIN 'A')~~

How does this impact CORE ALTERATIONS?

A. CORE ALTERATIONS may continue indefinitely because the Containment Building Purge Line monitors are only required in MODES 1 through 4.

B. CORE ALTERATIONS may continue indefinitely provided the CAP and COP Containment penetrations are closed.

C. CORE ALTERATIONS may continue for up to 7 days provided the CAP and COP Containment penetrations are closed.

D. CORE ALTERATIONS must be suspended until RM-6527A-1 has been returned to service.

Question 72

The plant is at 20% power.

SG 'A' MSIV inadvertently CLOSES

What will be the INITIAL effect on the listed parameters for the 'A' SG?

	SG Level	SG Pressure	Loop Tcold
A.	INCREASE	INCREASE	DECREASE
B.	DECREASE	INCREASE	INCREASE
C.	DECREASE	DECREASE	DECREASE
D.	INCREASE	DECREASE	INCREASE

Question 73

Which of the following correctly identifies a procedure transition from the EOP network to SACRG-1, SEVERE ACCIDENT CONTROL ROOM GUIDELINE INITIAL RESPONSE?

A. E-3, STEAM GENERATOR TUBE RUPTURE, when isolation of the ruptured SG from the intact SGs to be used for cooldown is unsuccessful.

B. FR-C.1, RESPONSE TO INADEQUATE CORE COOLING, when CETCs are greater than 1100°F and actions to cool the core are unsuccessful.

C. FR-Z.1, RESPONSE TO HIGH CONTAINMENT PRESSURE, when containment pressure has exceeded 52 psig and neither train of CBS is operating.

D. ECA-0.0, LOSS OF ALL AC POWER, when intact steam generators cannot be depressurized to reduce RCS leakage.

Question 74

Which of the following describes the operation of the Emergency bus second level undervoltage protection scheme?

A. When 1 of 2 relays sense bus voltage less than 95% of nominal for 1.2 seconds (RAT available), it initiates a sequence of load stripping and subsequent bus reenergization by the DG.

B. When 1 of 2 relays sense bus voltage drop below 25% of nominal, they initiate auto closure of the RAT supply breaker.

C. When both relays sense bus voltage less than 70% of nominal for 1.2 seconds (RAT available), they initiate a sequence of load stripping and subsequent bus reenergization by the DG.

D. When both relays sense bus voltage less than 95% of nominal coincident with an SI existing for greater than 10 seconds, they initiate a sequence of load stripping and subsequent bus reenergization by the DG.

Question 75

DG-1A has been placed in LOCAL control.

How will DG-1A respond to a Loss of Off-Site Power?

A. DG-1A will automatically start, the output breaker will automatically close, and load sequencing will automatically occur.

B. DG-1A will automatically start, the output breaker must be manually closed, and load sequencing will automatically occur upon breaker closure.

C. DG-1A must be manually started, the output breaker must be manually closed, and load sequencing must be performed manually.

D. DG-1A will automatically start, the output breaker must be manually closed, and load sequencing must be performed manually.

Question 76

From the list of PROCESS Radiation Monitors below, SELECT the monitors that have an associated control actuation function.

1. R-6509, Waste Liquid Test Tank discharge monitor
2. R-6519, Steam Generator Blowdown Flash Tank discharge monitor
3. R-6514, Waste Liquid Test Tank Inlet monitor
4. R-6505, Condenser Air Evacuation discharge monitor
5. R-6516, PCCW Loop A Activity monitor

A. 1 and 2 ONLY

B. 1, 2, and 3 ONLY

C. 2 and 3 ONLY

D. 1, 2, 4, and 5 ONLY

Question 77

Plant conditions:

- A reactor startup was in progress with reactor power at approximately 2%.
- A PT-507 failure caused the main steam dump valves to open.
- The BOP operator closed the steam dumps using the steam dump interlock control switches.
- RCS Tave is 545°F and slowly increasing

What ACTION must be taken in accordance with Technical Specifications?

A. RCS temperature must be restored to 551°F within 15 minutes.

B. RCS temperature must be restored to 551°F within the next hour.

C. RCS temperature must be restored to 557°F within the next 15 minutes.

D. RCS temperature must be restored to 557°F within the next hour.

Question 78

Which of the following describes the operation of the Service Air isolation valves, SA-V92 and SA-V93, during an Instrument Air leak?

A. AUTOMATICALLY CLOSE at 90 psig decreasing, resets to allow MANUAL OPENING above 93 psig INCREASING.

B. AUTOMATICALLY CLOSE at 90 psig decreasing, AUTOMATICALLY REOPEN above 93 psig INCREASING.

C. AUTOMATICALLY CLOSE at 80 psig decreasing, resets to allow MANUAL OPENING above 83 psig INCREASING.

D. AUTOMATICALLY CLOSE at 80 psig decreasing, AUTOMATICALLY REOPEN above 83 psig INCREASING.

Question 79

A fire alarm actuates at FP-CP-451 in the East pipe chase. The Unit Supervisor enters OS1200.00, RESPONSE TO FIRE OR FIRE ALARM ACTUATION, and dispatches the fire brigade to investigate. The brigade leader confirms an actual fire and commences fire-fighting actions. OS1200.00 requires that the control mode selector switches for the 'B' & 'C' ASDVs be placed in the CLOSE position.

What is the purpose of this action?

A. Prevents spurious "Hot Short" operation of the ASDVs.

B. Assures personnel safety by preventing the operation of the ASDVs while the fire brigade is fighting the fire.

C. Forces overpressure protection to the steamline safety valves, which are "Fire Rated" components.

D. The off-normal position of the switches reminds control room personnel of fire fighting action in the pipe chase.

Question 80

The plant is in MODE 5. Train 'B' RHR is in service in COOLDOWN mode. The following conditions exist:

- Tave is 182°F and STABLE
- RHR heat exchanger outlet valve, RH-HCV-607 is 10% OPEN
- RHR heat exchanger bypass flow control valve, RH-FCV-619, is maintaining total RHR flow at 3500 gpm

A loss of Instrument Air occurs. Which of the following describes the effect on the RHR system and on RCS temperature?

	RH-HCV-607	RH-FCV-619	RCS Temperature
A.	FAILS AS IS	FAILS AS IS	INCREASES
B.	FAILS AS IS	FAILS CLOSED	INCREASES
C.	FAILS OPEN	FAILS AS IS	DECREASES
D.	FAILS OPEN	FAILS CLOSED	DECREASES

Question 81

The plant is at 100 % power. The PCCW system is aligned for automatic operation.

With no immediate operator action, which of the following describes an effect of the Train 'A' PCCW heat exchanger temperature controller failing to the "FULL FLOW" MODE of operation?

A. PCCW flow to the Letdown Heat Exchanger will INCREASE.

B. RCP 'A' Motor Bearing temperature will INCREASE.

C. RCP 'A' Thermal Barrier cooling isolation valve, V-428, will CLOSE on high flow.

D. The temperature of letdown flow leaving the Letdown Heat Exchanger will DECREASE.

Question 82

Plant conditions:

- The operating crew has initiated an RCS cooldown at step # 14 of E-3, STEAM GENERATOR TUBE RUPTURE.
- Steam dumps are in the steam pressure mode of control.
- Steam dump pressure controller PK-507 is in MANUAL at 40% output.
- As RCS Tave approaches 550°F the BOP operator holds <u>both</u> STM DUMP P12 BLOCK/P12 BYPASS INTERLOCK control switches in the BYPASS position until the STM DUMP INTERLOCK BYPASSED lamp illuminates on UL-26.

Which of the following describes the expected status of the steam dump system?

A. The Group 1 "Cooldown" valves are fully open and the group 2 valves are partially open.

B. The Group 1 "Cooldown" valves are fully open.

C. The Group 1 "Cooldown" valves are partially open.

D. All steam dump valves are fully closed.

Question 83

Plant conditions:

- The crew was transferring the 'B' train of service water from the cooling tower back to the ocean.
- The 'B' Service Water pump and the 'B' Cooling Tower pump were running.
- A Loss of Offsite Power (LOP) occurred and both emergency busses have been reenergized from the emergency diesel generators.
- The discharge valve for the 'B' Cooling Tower pump failed to close.

Which of the following 'B' train pumps, if any, will be started by the sequencer?

A. None.

B. The 'B' Cooling Tower pump.

C. The 'B' Service Water pump.

D. The 'D' Service Water pump.

Question 84

According to the Operations Management Manual, which of the following is a general responsibility of the Unit Supervisor?

A. Responsible to function as the STA, if qualified, if the Shift Manager is absent or <u>not</u> qualified.

B. Responsible for notifying management and regulatory agencies as required by station reporting and notification requirements.

C. Responsible for unit operations being conducted in accordance with approved station orders, procedures, and Technical Specifications.

D. Responsible for initiating call out of personnel to fill vacant shift operating positions.

Question 85

Plant conditions:

- The plant has been shutdown for 10 days
- RCS temperature is 120°F
- RCS water level is at the (-)73.5 inch elevation with nozzle dams installed
- The crew has just experienced a loss of the running RHR pump and has entered OS1213.02, LOSS OF RHR WHILE OPERATING AT REDUCED INVENTORY OR MID-LOOP CONDITIONS.
- A representative from Reliability and Safety Engineering is not available in the outage "War Room"

Using the attached reference material, determine the minimum time to boiling based on plant conditions.

A. 21 minutes

B. 17 minutes

C. 13 minutes

D. 10 minutes

FIGURE OS1213.02 - 1 NSSS SYSTEM ELEVATIONS

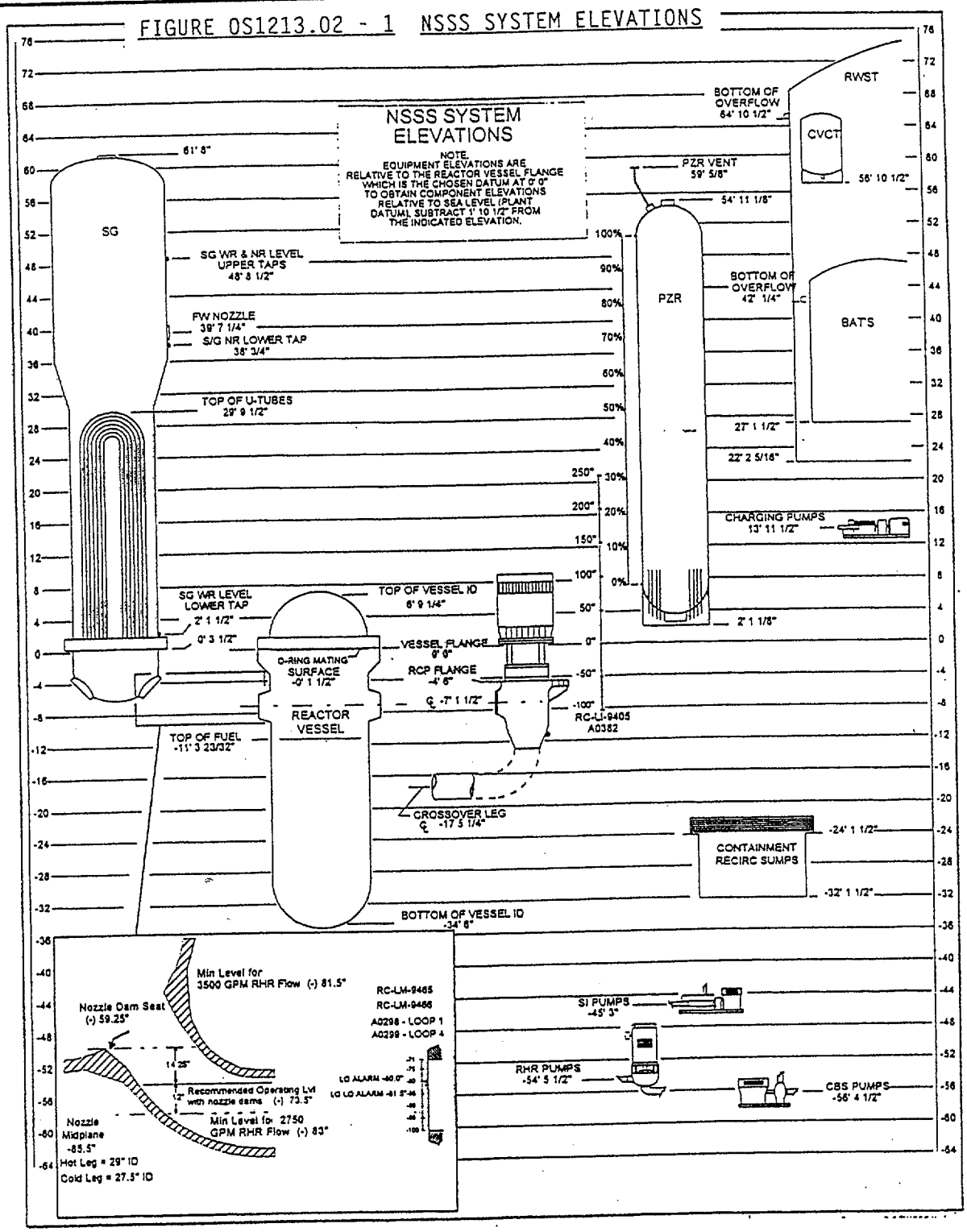

85a

FIGURE OS1213.02-4
TIME TO BOILING vs. TIME AFTER SHUTDOWN FOR RCS WATER LEVEL AT MIDLOOP

CAUTION
- The best estimate of time to boil is provided by Reliability and Safety Engineering (War Room). The graph below provides conservative time to boil values and should only be used if no other information is available.
- For planning purposes, the RCS time to boil should be based on the assumption of atmospheric pressure even when the RCS is evacuated.

NOTE The temperatures(e.g. 100°F,120°F,140°F,etc.) for different curves refer to initial RCS temperature at the time that loss of RHR cooling occurs. All curves assume atmospheric pressure at the onset of boiling.

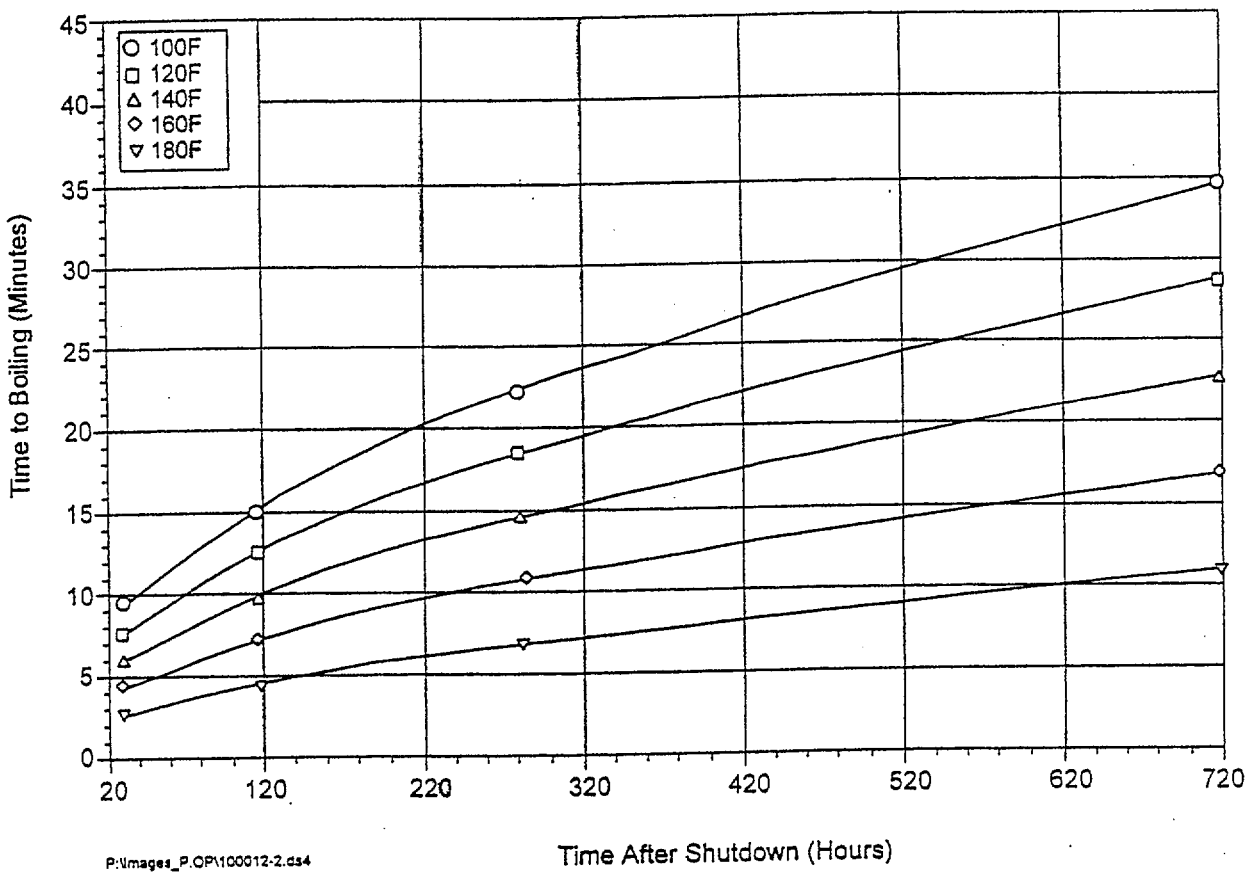

85b

FIGURE OS1213.02-5
TIME TO BOILING vs. TIME AFTER SHUTDOWN FOR RCS WATER LEVEL AT REDUCED INVENTORY (MINUS 36 INCHES)

CAUTION
- The best estimate of time to boil is provided by Reliability and Safety Engineering (War Room). The graph below provides conservative time to boil values and should only be used if no other information is available.
- For planning purposes, the RCS time to boil should be based on the assumption of atmospheric pressure even when the RCS is evacuated.

NOTE The temperatures(e.g. 100°F,120°F,140°F,etc.) for different curves refer to initial RCS temperature at the time that loss of RHR cooling occurs. All curves assume atmospheric pressure at the onset of boiling.

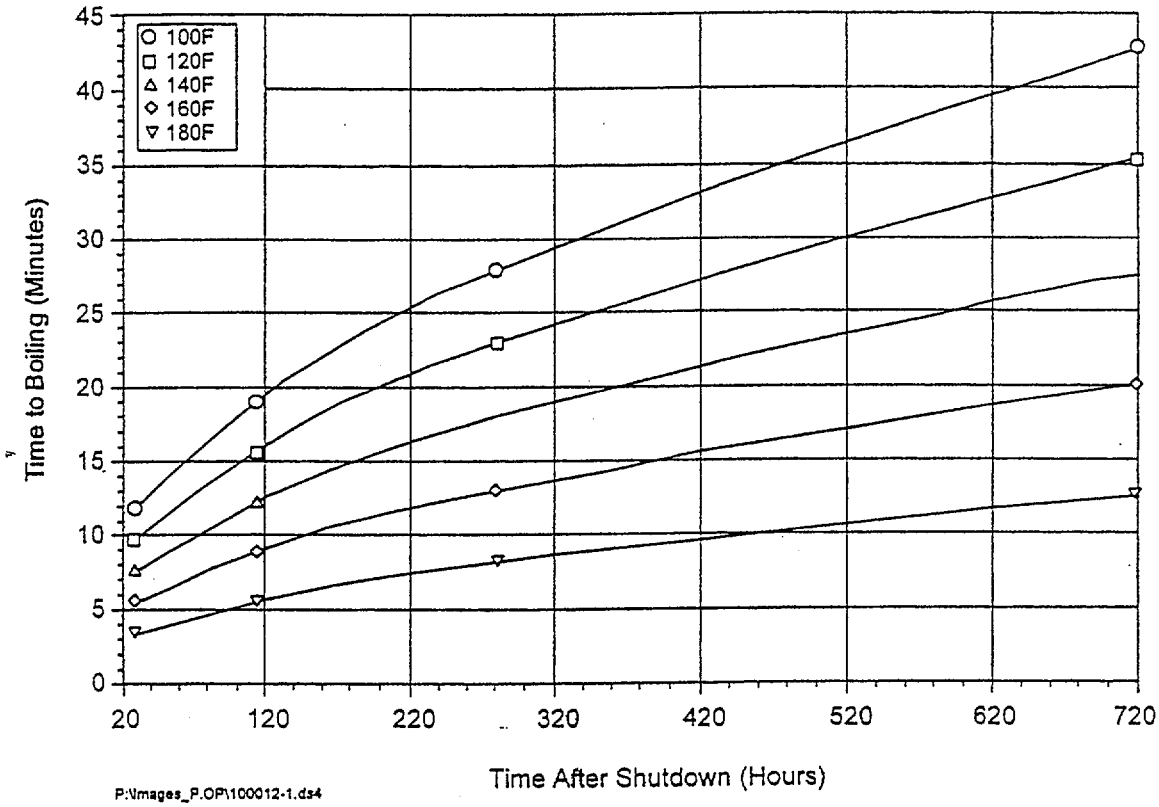

85c

Question 86

In accordance with ODI 45, SYSTEM LINEUP PERFORMANCE, which of the following describes how to conduct an Independent Verification if the component to be verified is in a High Radiation Area?

A. The Independent Verification may be performed from a distance if it can be verified as being the proper component.

B. The Independent Verification may be waived providing there is remote indication of the component to be verified.

C. The Independent Verification may be performed concurrently with the initial repositioning.

D. The Independent Verification may be marked as N/A by the US on the system lineup.

Question 87

The crew is preparing to perform a rapid plant shutdown from 100% power using Figure 6: Rapid Power Decreases Guidelines, of OS1000.06, POWER DECREASE.

The Unit Supervisor directs the PSO to turn on the 'A' and 'B' pressurizer Backup Heaters to force pressurizer spray.

What is the reason for this direction?

A. Ensures proper mixing occurs such that RCS loop boron samples accurately reflect actual boron concentration.

B. Prevents boron stratification in the pressurizer spray nozzles.

C. Prevents an RCS dilution event from occurring during a pressurizer outsurge.

D. Ensures adequate flow through the pressurizer to prevent boron precipitation on the pressurizer heaters.

Question 88

The plant reduced power from 100% to 15%, dumping steam to the main condenser via the steam dumps.

While lined up to perform a hotwell discharge, seawater was vacuum dragged into the hotwell via a leaking check valve.

Chemistry has confirmed that a seawater intrusion has occurred. The condensate pump cation conductivity is now indicating 1.2 μmhos.

Which of the following is the required course of action per OS1234.02, CONDENSER TUBE OR TUBE SHEET LEAK?

A. Reduce reactor power to ~5% power. Establish feed flow to the SGs using the SUFP taking a suction on the CST. Continue hotwell cleanup using OS1234.02.

B. Reduce reactor power to ~5% power. Establish feed flow to the SGs using the SUFP taking a suction on the hotwells. Simultaneously cleanup the hotwells using OS1234.02.

C. Perform a reactor shutdown within 1 hour. Establish feed flow to the SGs using the SUFP taking a suction on the CST. Continue hotwell cleanup using OS1234.02.

D. Trip the reactor perform E-0, REACTOR TRIP OR SAFETY INJECTION. Establish feed flow to the SGs using the SUFP taking a suction on the CST. Continue hotwell cleanup using OS1234.02.

Question 89

Which of the following is the required re-evaluation frequency for Temporary Modifications (TMODs) installed per MA4.3, TEMPORARY MODIFICATIONS?

A. 60 days

B. 90 days

C. 120 days

D. 180 days

Question 90

Plant conditions:

- It is Monday morning at 0805
- The plant is in MODE 1
- OX1446.01, AC POWER SOURCE WEEKLY OPERABILITY, was last performed 7 days ago (at 1500).
- The TRN 'A' Emergency Diesel Generator was declared INOPERABLE five minutes ago (0800).

Which of the following identifies the latest time that the crew can complete OX1446.01 and still meet applicable Technical Specification ACTION requirements?

A. 0900 today

B. 1500 today

C. 1600 today

D. 0900 Wednesday

Question 91

While work is being performed on Feed water heater drain components, the CONTACT PERSON for one work package requests a temporary lift.

There are two additional work packages assigned to the clearance. The TAGGING AUTHORITY is unable to locate the CONTACT PERSON on one work package.

According to MA 4.2, Equipment Tagging and Isolation, how is the request processed?

A. Obtain concurrence from another SRO licensed individual and designate an alternate CONTACT PERSON for notification of the temporary lift, then approve the request after notification is made.

B. Do NOT approve the request until the designated CONTACT PERSON is located.

C. Identify another Level 1 individual who will assume the CONTACT PERSON responsibilities, then approve the request for temporary lift.

D. Temporarily assign the person requesting the temporary lift the CONTACT PERSON responsibility for all work packages under the clearance while the temporary lift is in effect. When responsibility has been assumed, approve the request.

Question 92

The Containment On-line Purge System (COP) is being placed in service for Containment entry.

Which of the following is used for CONFIGURATION CONTROL when the setpoints for the COP Radiation monitors are changed?

A. OS1023.69, CONTAINMENT ON-LINE PURGE SYSTEM OPERATION.

B. MA 4.3, TEMPORARY MODIFICATIONS.

C. MA 4.4, CONFIGURATION CONTROL DURING MAINTENANCE AND TROUBLESHOOTING.

D. MA 4.6, RDMS DATABASE ITEM CONTROL.

Question 93

The crew is responding to the following alarm:

D4057-HTR 26B EX CHK VLV 5 FULL CLOSED

One of the steps in the VPRO is to verify that the extraction check valve is closed.

Using the attached drawing, select the statement that describes the indication the operator should have when checking the valve closed.

A. Red light on the back of the MCB lit and white light on UL 15 <u>not</u> lit.

B. Red light on the back of the MCB <u>not</u> lit and white light on UL 15 lit.

C. Red light on the back of the MCB and white light on UL 15 both lit.

D. Red light on the back of the MCB and white light on UL 15 both <u>not</u> lit.

DWG. TRANSFERRED TO CUSTODY OF NHY AT REV. 3 LTR. SBU-4123 DTD. 10-21-86

ISSUED-FOR-CONSTRUCTION

EX-NON RETURN VALVES V-8 & V-11 LOGIC DIAGRAM

New Hampshire Yankee — Seabrook Station

1-NHY-503537 REV: 6

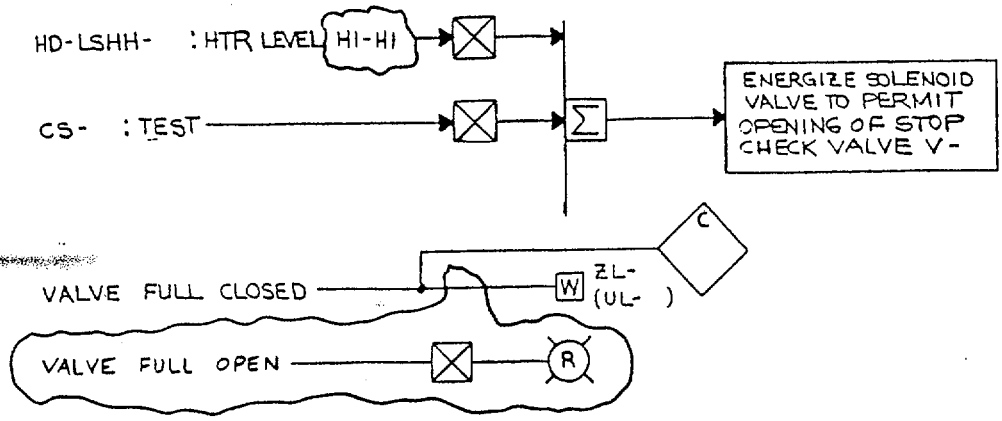

EQPT/SERVICE	VALVE	HD-LSHH-	CS-	ZL-	UL-15	CPTR ID NO / RTU
FW HTR CO-E-25A	V11	4476	3325	3325	98	D4058 / 8
25B	V8	4477	3326	3326	102	D4059 / 9
FW-E-26A	V2	4495	3327	3327	106	D4056 / 8
FW-E-26B	V5	4496	3328	3328	110	D4057 / 9

REV	DATE	DRWN	CHKD	CE	LDE	DESCRIPTION
6	7/21/94	MRB	MRJ	JGW	CJM	INCORP MM00 94-524 CA1
5	12/4/88	HP	AMR	APL	JFD	INCORP. DCR 87-215, CA-7
4	9/24/87	HK	BCE	TPN	N/A	9763-M-503537 SUPERCEDES UE&C DWG;

RECORDS MANAGEMENT DEPT. CONTROL NUMBER SOU

RECORDS MANAGEMENT DEPT CONTROL NUMBER NOS

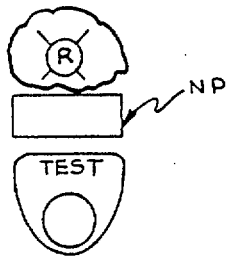

CS AT MCB

ZL AT MCB
(UL-)

NOTE
1- FOR DESCRIPTION OF LOGIC SYMBOLS SEE M-503100

REFERENCE DOCUMENTS:

M-506446
M-506447
M-506448
M-506449
SD-1G

1-NHY-503537 REV: 6

attachment to #93

Question 94

A non-licensed operator on shift has reached 3000 mrem TEDE exposure for the current year.

Which of the following correctly states whose permission is required for the operator to receive additional exposure?

A. The Operations Manager and a Health Physics Supervisor.

B. The Operations Manager and the Health Physics Department Manager

C. A Health Physics Supervisor and the Health Physics Department Manager.

D. The Health Physics Department Manager and the Station Director.

Question 95

To prevent an unscheduled plant shutdown, it has been determined that a contractor will be dispatched into Containment under a Planned Special Exposure (PSE).

In addition to the Health Physics Department Manager and the Station Director, who must approve the PSE?

A. The individual being exposed

B. The Shift Manager (SM)

C. The Health Physics Supervisor

D. The individual's employer

Question 96

Which of the following describes the flowpath for performing an air purge of Containment to reduce hydrogen concentration while in the emergency operating procedures?

A. From the service air system into Containment via the normal H_2 analyzer sample lines. Out of Containment via CGC-V14 and CGC-V28 to the Containment enclosure emergency exhaust filters and then out the plant vent.

B. From the service air system via normally locked and closed valves into Containment. Out of Containment via CGC-V14 to the inlet of the Train 'A' Containment enclosure emergency exhaust filter and then out to PAH-F-16

C. From the service air system via normally locked closed valves into Containment. Out of Containment via CGC-V14 and CGC-V28 to the inlet of the Containment enclosure emergency exhaust filters and then out the plant vent.

D. From the service air system via normally locked open valves through a Containment isolation check valve into Containment. Out of Containment via CGC-V14 or CGC-V28 to the Containment enclosure emergency exhaust filter to PAH-F-16.

Question 97

A Steam Generator Tube Rupture has occurred. RCS pressure control has been lost and the crew transitions to ECA-3.3, SGTR WITHOUT PRESSURIZER PRESSURE CONTROL.

Which of the following reflects the order of steps performed in attempting to restore RCS pressure control?

A. First, try to establish normal PZR spray. Then, try to restore a PZR PORV. Finally, try to establish auxiliary spray.

B. First, try to establish auxiliary spray. Then, try to restore a PZR PORV. Finally, try to establish normal PZR spray.

C. First, try to restore a PZR PORV. Then, try to establish normal PZR spray. Finally, try to establish auxiliary spray.

D. First, try to establish normal PZR spray. Then, try to establish auxiliary spray. Finally, try to restore a PZR PORV.

Question 98

The plant is at 75% power when the following alarms are received:

- D4433 L-TOP TRAIN 'B' ARMED
- D4434 L-TOP TRAIN 'A' 100# FROM ACTUATION

Which of the following is the appropriate Abnormal Operating Procedure to enter in response to this condition?

A. OS1201.06, PT-455-458 PZR PRESSURE INSTRUMENT FAILURE, due to Pressurizer pressure channel P456 failing high.

B. OS1201.08, TAVG DELTA T INSTRUMENT FAILURE, due to RCS loop2 Tc failing low.

C. OS1201.09, RCS WIDE RANGE PRESSURE OR TEMPERATURE INSTRUMENT FAILURE, due to loop 2 wide range Th failing low.

D. OS1247.01, LOSS OF A VITAL INSTRUMENT PANEL PP-1A, PP-1B, PP-1C, PP-1D, due to loss of power to PP-1B

Question 99

While performing ES-3.1, POST-SGTR COOLDOWN USING BACKFILL, the operator is directed to feed the ruptured steam generator when indicated NR level decreases to ≤ 14%. If ruptured steam generator pressure decreases in an uncontrolled manner the operator is directed to stop feeding the ruptured steam generator.

Which of the following describes the basis for stopping feed flow?

A. Uncontrolled depressurization is indicative of a faulted steam generator and feed flow is stopped to avoid a PTS concern in the RCS.

B. Uncontrolled depressurization can be caused by steam condensation due to overfeeding the ruptured steam generator and feed flow is stopped to prevent reinitiation of break flow.

C. Uncontrolled depressurization can be caused by steam condensation around uncovered U-tubes and feed flow is stopped to prevent continued shrinking of NR level.

D. Uncontrolled depressurization can be caused by loss of RCS pressure control and feed flow is stopped to prevent unborated water from entering the RCS.

Question 100

A SITE AREA EMERGENCY was declared 50 minutes ago. Notification has been made to the States and the NRC.

Conditions have stabilized and the event can be terminated.

Who is responsible for termination of the classification?

A. Short Term Emergency Director

B. Emergency Operations Manager

C. Licensing Coordinator

D. Response Manager