Docket

Docket No. 50-244

RECEIVED
APR 29 1981
U.S. NUCLEAR REGULATORY COMMISSION

Mr. John Maier
Vice President
Electric and Steam Production
Rochester Gas & Electric Corporation
89 East Avenue
Rochester, New York 14649

Dear Mr. Maier:

SUBJECT: ORDER FOR MODIFICATION OF LICENSE CONCERNING PRIMARY COOLANT SYSTEM PRESSURE ISOLATION VALVES

This letter transmits an Order for Modification of License which revises the Technical Specifications for Provisional Operating License No. DPR-18 for the R. E. Ginna Nuclear Power Plant. The change is a result of the information you provided in response to our 10 CFR 50.54(f) letter of February 23, 1980, regarding primary coolant system pressure isolation valves. Based upon our review of your response, as well as other previously docketed information, we have concluded that a WASH-1400 Event V valve configuration exists at your facility and that corrective action as defined in the attached Order is necessary.

Attached to the Order for Modification of License is the Technical Evaluation Report (TER) which supports the Order; and the plant Technical Specifications which will ensure public health and safety over the operating life of your facility. We are aware that there may be editorial corrections to the attached TER. Please note that the Technical Specifications correctly delineate the requirements for your facility.

In addition to Event V valve configurations, we are continuing our efforts to review other configurations located at high pressure/low pressure system boundaries for their potential risk contribution to an intersystem LOCA. Therefore, further activity regarding the broader topic of intersystem LOCA's may be expected in the future.

8105040090
P

OFFICE							
SURNAME							
DATE							

A copy of the enclosed Order is being filed with the Office of the Federal Register for publication.

Sincerely,

Dennis M. Crutchfield, Chief
Operating Reactors Branch #5
Division of Licensing

Enclosure:
Order for Modification
of License

cc w/enclosure:
See next page

DISTRIBUTION
Docket
NRC PDR
Local PDR
ORB Reading
HDenton
ECase
DEisenhut
RPurple
TNovak
RTedesco
GLianas
JRoe
HSmith
DSnaider
PPolk
DCRutchfield
OELD
OI&E (3)
TBarnhart (4)
ACRS (10)
NSIC
TERA
Secretariat (SECY)
RDiggs
JHeltemes, AEOD

OFFICE	DL: ORB #5	DL: ORB #5	DL: ORB #2	DL: ORB #5	DL: AD/SA	DL: DIR	NRR: DDIR
SURNAME	RSnaider:cc	HSmith	PPolk	DCrutchfield	GLainas	DEisenhut	ECase
DATE	2/27/81	2/27/81	2/14/81	3/5/81	4/16/81	4/20/81	

UNITED STATES
NUCLEAR REGULATORY COMMISSION
WASHINGTON, D. C. 20555

April 20, 1981

Docket No. 50-244
LS05-81-04-022

Mr. John Maier
Vice President
Electric and Steam Production
Rochester Gas & Electric Corporation
89 East Avenue
Rochester, New York 14649

Dear Mr. Maier:

SUBJECT: ORDER FOR MODIFICATION OF LICENSE CONCERNING PRIMARY COOLANT SYSTEM PRESSURE ISOLATION VALVES

This letter transmits an Order for Modification of License which revises the Technical Specifications for Provisional Operating License No. DPR-18 for the R. E. Ginna Nuclear Power Plant. The change is a result of the information you provided in response to our 10 CFR 50.54(f) letter of February 23, 1980, regarding primary coolant system pressure isolation valves. Based upon our review of your response, as well as other previously docketed information, we have concluded that a WASH-1400 Event V valve configuration exists at your facility and that corrective action as defined in the attached Order is necessary.

Attached to the Order for Modification of License is the Technical Evaluation Report (TER) which supports the Order; and the plant Technical Specifications which will ensure public health and safety over the operating life of your facility. We are aware that there may be editorial corrections to the attached TER. Please note that the Technical Specifications correctly delineate the requirements for your facility.

In addition to Event V valve configurations, we are continuing our efforts to review other configurations located at high pressure/low pressure system boundaries for their potential risk contribution to an intersystem LOCA. Therefore, further activity regarding the broader topic of intersystem LOCA's may be expected in the future.

A copy of the enclosed Order is being filed with the Office of the Federal Register for publication.

Sincerely,

Dennis M. Crutchfield

Dennis M. Crutchfield, Chief
Operating Reactors Branch #5
Division of Licensing

Enclosure:
Order for Modification
of License

cc w/enclosure:
See next page

cc
Harry H. Voigt, Esquire
LeBoeuf, Lamb, Leiby and MacRae
1333 New Hampshire Avenue, N. W.
Suite 1100
Washington, D. C. 20036

Mr. Michael Slade
12 Trailwood Circle
Rochester, New York 14618

Rochester Committee for
Scientific Information
Robert E. Lee, Ph.D.
P. O. Box 5236 River Campus
Station
Rochester, New York 14627

Jeffrey Cohen
New York State Energy Office
Swan Street Building
Core 1, Second Floor
Empire State Plaza
Albany, New York 12223

Director, Technical Development
Programs
State of New York Energy Office
Agency Building 2
Empire State Plaza
Albany, New York 12223

Rochester Public Library
115 South Avenue
Rochester, New York 14604

Supervisor of the Town
of Ontario
107 Ridge Road West
Ontario, New York 14519

Resident Inspector
R. E. Ginna Plant
c/o U. S. NRC
1503 Lake Road
Ontario, New York 14519

Ezra I. Bialik
Assistant Attorney General
Environmental Protection Bureau
New York State Department of Law
2 World Trade Center
New York, New York 10047

Director, Criteria and Standards
Division
Office of Radiation Programs
(ANR-460)
U. S. Environmental Protection
Agency
Washington, D. C. 20460

U. S. Environmental Protection
Agency
Region II Office
ATTN: EIS COORDINATOR
26 Federal Plaza
New York, New York 10007

Herbert Grossman, Esq., Chairman
Atomic Safety and Licensing Board
U. S. Nuclear Regulatory Commission
Washington, D. C. 20555

Dr. Richard F. Cole
Atomic Safety and Licensing Board
U. S. Nuclear Regulatory Commission
Washington, D. C. 20555

Dr. Emmeth A. Luebke
Atomic Safety and Licensing Board
U. S. Nuclear Regulatory Commission
Washington, D. C. 20555

Mr. Thomas B. Cochran
Natural Resources Defense Council, Inc.
1725 I Street, N. W.
Suite 600
Washington, D. C. 20006

UNITED STATES OF AMERICA
NUCLEAR REGULATORY COMMISSION

In the Matter of	)	
	)	
ROCHESTER GAS & ELECTRIC CORP.	)	
	)	Docket No. 50-244
R. E. Ginna Nuclear Power Plant	)	
	)	
	)	

ORDER FOR MODIFICATION OF LICENSE

I

The Rochester Gas and Electric Corporation (the licensee) holds Provisional Operating License No. DPR-18, which authorizes the licensee to operate the R. E. Ginna Nuclear Power Plant (the facility) at power levels not in excess of 1520 megawatts (thermal) rated power. The facility, which is located at the licensee's site in Wayne County, New York is a pressurized water reactor (PWR) used for the commercial generation of electricity.

II

The Reactor Safety Study (RSS), WASH-1400, identified in a PWR an inter-system loss of coolant accident (LOCA) which is a significant contributor to risk of core melt accidents (Event V). The design examined in the RSS contained in-series check valves isolating the high pressure Primary Coolant System (PCS) from the Low Pressure Injection System (LPIS) piping. The scenario which leads to the Event V accident is initiated by the failure of these check valves to function as a pressure isolation barrier. This causes an overpressurization and rupture of the LPIS low pressure piping which results in a LOCA that bypasses containment.

8105040094

In order to better define the Event V concern, all light water reactor licensees were requested by letter dated February 23, 1980, to provide the following in accordance with 10 CFR 50.54(f):

1. Describe the valve configurations and indicate if an Event V isolation valve configuration exists within the Class I boundary of the high pressure piping connecting PCS piping to low pressure system piping; e.g., (1) two check valves in series, or (2) two check valves in series with a motor operated valve (MOV);
2. If either of the above Event V configurations exist, indicate whether continuous surveillance or periodic tests are being performed on such valves to ensure integrity. Also indicate whether valves have been known, or found, to lack integrity; and
3. If either of the above Event V configurations exist, indicate whether plant procedures should be revised or if plant modifications should be made to increase reliability.

In addition to the above, licensees were asked to perform individual check valve leak testing prior to plant startup after the next scheduled outage.

By letter dated March 14, 1980, the licensee responded to our February letter. Based upon the review of this response as well as the review of previously docketed information for the facility, I have concluded in consonance with the attached Safety Evaluation (Attachment 1) that one or more valve configuration(s) of concern exist at the facility. The attached Technical Evaluation Report (TER) (Attachment 2) provides, in Section 4.0, a tabulation of the subject valves.

The staff's concern has been exacerbated due not only to the large number of plants which have an Event V configuration(s) but also because of recent unsatisfactory operating experience. Specifically, two plants have leak tested check valves with unsatisfactory results. At Davis-Besse, a pressure isolation check valve in the LPIS failed and the ensuing investigation found that valve internals had become disassembled. At the Sequoyah Nuclear Plant, two Residual Heat Removal (RHR) injection check valves and one RHR recirculation check valve failed because valves jammed open against valve over-travel limiters.

It is, therefore, apparent that when pressure isolation is provided by two in-series check valves and when failure of one valve in the pair can go undetected for a substantial length of time, verification of valve integrity is required. Since these valves are important to safety, they should be tested periodically to ensure low probability of gross failure. As a result, I have determined that periodic examination of check valves must be undertaken by the licensee as provided in Section III below to verify that each valve is seated properly and functioning as a pressure isolation device. Such testing will reduce the overall risk of an inter-system LOCA. The testing mandated by this Order may be accomplished by direct volumetric leakage measurement or by other equivalent means capable of demonstrating that leakage limits are not exceeded in accordance with Section 2.2 of the attached TER.

In view of the operating experiences described above and the potential consequences of check valve failure, I have determined that prompt action is necessary to increase the level of assurance that multiple pressure isolation barriers are in place and will remain intact. Therefore, the public health, safety and interest require that this modification of Provisional Operating License No. DPR-18 be immediately effective.

III

Accordingly, pursuant to Section 161i of the Atomic Energy Act of 1954, as amended, and the Commission's regulations in 10 CFR Parts 2 and 50, IT IS HEREBY ORDERED THAT EFFECTIVE IMMEDIATELY, Provisional Operating License No. DPR-18 is modified by the addition of the following requirements:

1. Implement Technical Specifications (Attachment 3) which require periodic surveillance over the life of the plant and which specify limiting conditions for operation for PCS pressure isolation valves.
2. If check valves have not been (a) individually tested within 12 months preceding the date of the Order, and (b) found to comply with the leakage rate criteria set forth in the Technical Specifications described in Attachment 3, the MOV in each line shall be closed within 30 days of the effective date of this Order and quarterly Inservice Inspection (ISI) MOV cycling ceased until the check valve tests have been satisfactorily accomplished. (Prior to closing the MOV, procedures shall be implemented and operators trained to assure

that the MOV remains closed. Once closed, the MOV shall be tagged closed to further preclude inadvertent valve opening).

3. The MOV shall not be closed as indicated in paragraph 2 above unless a supporting safety evaluation has been prepared. If the MOV is in an emergency core cooling system (ECCS), the safety evaluation shall include a determination as to whether the requirements of 10 CFR 50.46 and Appendix K to 10 CFR Part 50 will continue to be satisfied with the MOV closed. If the MOV is not in an ECCS, the safety evaluation shall include a determination as to whether operation with the MOV closed presents an unreviewed safety question as defined in 10 CFR 50.59(a)(2). If the requirements of 10 CFR 50.46 and Appendix K have not been satisfied, or if an unreviewed safety question exists as defined in 10 CFR 50.59, then the facility shall be shut down within 30 days of the date of this Order and remain shutdown until check valves are satisfactorily tested in accordance with the Technical Specifications set forth in Attachment 3.

4. The records of the check valve tests required by this Order shall be made available for inspection by the NRC's Office of Inspection and Enforcement.

IV

The licensee or any other person who has an interest affected by this Order may request a hearing on this Order within 25 days of its publication in the Federal Register. A request for hearing shall be submitted to the Secretary, U.S. Nuclear Regulatory Commission, Washington, D.C. 20555. A copy of the request shall also be sent to the Executive Legal Director at the same address, and to Harry H. Voigt, Esquire, LeBoeuf, Lamb, Leiby & MacRae, 1333 New Hampshire Avenue, N. W. Suite 1100, Washington, D. C. 20036, attorney for the licensee. If a hearing is requested by a person other than the licensee, that person shall describe, in accordance with 10 CFR 2.714(a)(2), the manner in which his or her interest is affected by this Order. ANY REQUEST FOR A HEARING SHALL NOT STAY THE IMMEDIATE EFFECTIVENESS OF THIS ORDER.

If a hearing is requested by the licensee or other person who has an interest affected by this Order, the Commission will issue an order designating the time and place of any such hearing. If a hearing is held, the issues to be considered at such a hearing shall be:

(a) Whether the licensee should be required to individually leak test check valves in accordance with the Technical Specifications set forth in Attachment 3 to this Order.

(b) Whether the actions required by Paragraphs 2 and 3 of Section III of this Order must be taken if check valves have not been tested within 12 months preceding the date of this Order.

Operation of the facility on terms consistent with this Order is not stayed by the pendency of any proceedings on this Order. In the event that a need for further action becomes apparent, either in the course of proceedings on this Order or any other time, the Director will take appropriate action.

FOR THE NUCLEAR REGULATORY COMMISSION

Darrell G. Eisenhut, Director
Division of Licensing

Effective Date: April 20, 1981
Bethesda, Maryland

Attachments:
1. Safety Evaluation Report
2. Technical Evaluation Report
3. Technical Specifications

UNITED STATES
NUCLEAR REGULATORY COMMISSION
WASHINGTON, D. C. 20555

SAFETY EVALUATION REPORT
R. E. GINNA NUCLEAR POWER PLANT
PRIMARY COOLANT SYSTEM PRESSURE ISOLATION VALVES
(WASH-1400, EVENT V)

1.0 Introduction

The Reactor Safety Study (RSS), WASH-1400, identified in a PWR an intersystem loss of coolant accident (LOCA) which is a significant contributor to risk of core melt accidents (Event V). The design examined in the RSS contained in-series check valves isolating the high pressure Primary Coolant System (PCS) from the Low Pressure Injection System (LPIS) piping. The scenario which leads to the Event V accident is initiated by the failure of these check valves to function as a pressure isolation barrier. This causes an overpressurization and rupture of the LPIS low pressure piping which results in a LOCA that bypasses containment.

In order to better define the Event V concern, all light water licensees were requested by 10 CFR 50.54(f) letter, dated February 23, 1980, to identify valve configurations of concern and prior valve test results, if any. By letter dated March 14, 1980, the licensee responded to our request and this information was subsequently transmitted to our contractor, the Franklin Research Center for verification that the licensee had correctly identified the subject valve configurations.

2.0 Evaluation

In order to prepare the attached Technical Evaluation Report (TER) it was necessary that the contractor verify and evaluate the licensee's response to our February 1980 letter. The NRC acceptance criteria used by Franklin were based on WASH-1400 findings, probabilistic analyses and appropriate Standard Review Plan requirements. With respect to the verification of the licensee's response to our information request, the Franklin evaluation was based on FSAR information, ISI/IST site visit data, and other previously docketed information. The attached Franklin TER correctly identifies the subject valve configurations.

3.0 Conclusion

Based on our review of the Franklin TER we find that the valve configurations of concern have been correctly identified. Since periodic testing of these PCS pressure isolation valves will reduce the probability of an intersystem LOCA we, therefore, conclude that the requirement to test these valves should be incorporated into the plant's Technical Specifications.

Dated: April 20, 1981

8105040097

tachment 2

TECHNICAL EVALUATION REPORT

PRIMARY COOLANT SYSTEM PRESSURE ISOLATION VALVES

ROCHESTER GAS & ELECTRIC CORPORATION
ROBERT E. GINNA UNIT 1

NRC DOCKET NO. 50-244

NRC TAC NO. 12915

NRC CONTRACT NO. NRC-03-79-118

FRC PROJECT C5257

FRC TASK 248

Prepared by

Franklin Research Center
The Parkway at Twentieth Street
Philadelphia, PA 19103

Author: P. N. Noell
T. C. Stilwell
FRC Group Leader: P. N. Noell

Prepared for

Nuclear Regulatory Commission
Washington, D.C. 20555

Lead NRC Engineer: P. J. Polk

October 24, 1980

This report was prepared as an account of work sponsored by an agency of the United States Government. Neither the United States Government nor any agency thereof, or any of their employees, makes any warranty, expressed or implied, or assumes any legal liability or responsibility for any third party's use, or the results of such use, of any information, apparatus, product or process disclosed in this report, or represents that its use by such third party would not infringe privately owned rights.

8105040102

Franklin Research Center
A Division of The Franklin Institute
The Benjamin Franklin Parkway, Phila., Pa. 19103 (215) 448-1000

1.0 INTRODUCTION

The NRC has determined that certain isolation valve configurations in systems connecting the high-pressure Primary Coolant System (PCS) to lower-pressure systems extending outside containment are potentially significant contributors to an intersystem loss-of-coolant accident (LOCA). Such configurations have been found to represent a significant factor in the risk computed for core melt accidents.

The sequence of events leading to the core melt is initiated by the concurrent failure of two in-series check valves to function as a pressure isolation barrier between the high-pressure PCS and a lower-pressure system extending beyond containment. This failure can cause an overpressurization and rupture of the low-pressure system, resulting in a LOCA that bypasses containment.

The NRC has determined that the probability of failure of these check valves as a pressure isolation barrier can be significantly reduced if the pressure at each valve is continuously monitored, or if each valve is periodically inspected by leakage testing, ultrasonic examination, or radiographic inspection. The NRC has established a program to provide increased assurance that such multiple isolation barriers are in place in all operating Light Water Reactor plants designated by DOR Generic Implementation Activity B-45.

In a generic letter of February 23, 1980, the NRC requested all licensees to identify the following valve configurations which may exist in any of their plant systems communicating with the PCS: 1) two check valves in series or 2) two check valves in series with a motor-operated valve (MOV).

For plants in which valve configurations of concern are found to exist, licensees were further requested to indicate: 1) whether, to ensure integrity of the various pressure isolation check valves, continuous surveillance or periodic testing was currently being conducted, 2) whether any check valves of concern were known to lack integrity, and 3) whether plant procedures should be revised or plant modifications be made to increase reliability.

Franklin Research Center (FRC) was requested by the NRC to provide technical assistance to NRC's B-45 activity by reviewing each licensee's submittal

against criteria provided by the NRC and by verifying the licensee's reported findings from plant system drawings. This report documents FRC's technical review.

2.0 CRITERIA

2.1 Identification Criteria

For a piping system to have a valve configuration of concern, the following five items must be fulfilled:

1) The high-pressure system must be connected to the Primary Coolant System;

2) there must be a high-pressure/low-pressure interface present in the line;

3) this same piping must eventually lead outside containment;

4) the line must have one of the valve configurations shown in Figure 1; and

5) the pipe line must have a diameter greater than 1 inch.

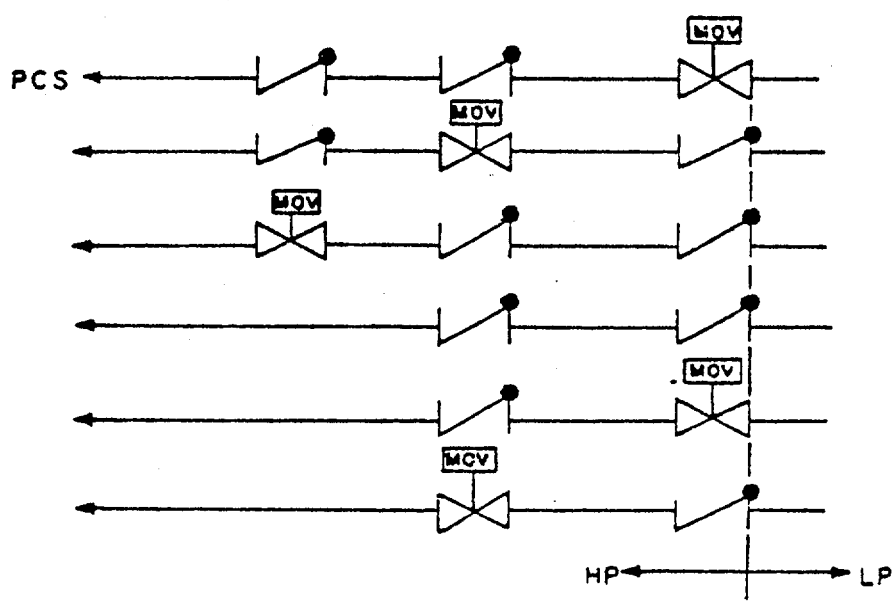

Figure 1. Valve Configurations Designated by the NRC To Be Included in This Technical Evaluation

2.2 Periodic Testing Criteria

For licensees whose plants have valve configurations of concern and choose to institute periodic valve leakage testing, the NRC has established criteria for frequency of testing, test conditions, and acceptable leakage rates. These criteria may be summarized as follows:

2.2.1 Frequency of Testing

Periodic hydrostatic leakage testing* on each check valve shall be accomplished every time the plant is placed in the cold shutdown condition for refueling, each time the plant is placed in a cold shutdown condition for 72 hours if testing has not been accomplished in the preceding 9 months, each time any check valve may have moved from the fully closed position (i.e., any time the differen- tial pressure across the valve is less than 100 psig), and prior to returning the valve to service after maintenance, repair, or replacement work is performed.

2.2.2 Hydrostatic Pressure Criteria

Leakage tests involving pressure differentials lower than function pressure differentials are permitted in those types of valves in which service pressure will tend to diminish the overall leakage channel opening, as by pressing the disk into or onto the seat with greater force. Gate valves, check valves, and globe-type valves, having function pressure differential applied over the seat, are examples of valve applications satisfying this requirement. When leakage tests are made in such cases using pressures lower than function maximum pressure differential, the observed leakage shall be adjusted to function maximum pressure differential value. This adjustment shall be made by calculation appropriate to the test media and the ratio between test and function pressure differential, assuming leakage to be directly proportional to the pressure differential to the one-half power.

2.2.3 Acceptable Leakage Rates:

- Leakage rates less than or equal to 1.0 gpm are considered acceptable.
- Leakage rates greater than 1.0 gpm but less than or equal to 5.0 gpm are considered acceptable if the latest measured rate has not exceeded the rate determined by the previous test by an amount

*To satisfy ALARA requirements, leakage may be measured indirectly (as from the performance of pressure indicators) if accomplished in accordance with approved procedures and supported by computations showing that the method is capable of demonstrating valve compliance with the leakage criteria.

that reduces the margin between the measured leakage rate and the maximum permissible rate of 5.0 gpm by 50% or greater.

- Leakage rates greater than 1.0 gpm but less than or equal to 5.0 gpm are considered unacceptable if the latest measured rate exceeded the rate determined by the previous test by an amount that reduces the margin between measured leakage rate and the maximum permissible rate of 5.0 gpm by 50% or greater.
- Leakage rates greater than 5.0 gpm are considered unacceptable.

3.0 TECHNICAL EVALUATION

3.1 Licensee's Response to the Generic Letter

In response to the NRC's generic letter [Ref. 1], the Rochester Gas and Electric Corporation (RGE) indicated that the High-Head Safety Injection System, cold leg side, and the Low-head Safety Injection System are two suspect piping systems.

The licensee further stated "At the present time there is no continuous surveillance or periodic testing on these valves to ensure pressure integrity. However, in ten years of operation there has been no indication of any gross leakage in any of these check valves."

It was discovered by FRC that the hot leg branches of the High-Head Safety Injection System also contain valve configurations of concern.

It is FRC's understanding that, with RGE's concurrence, the NRC will direct RGE to change its Plant Technical Specifications as necessary to ensure that periodic leakage testing (or equivalent testing) is conducted in accordance with the criteria of Section 2.2.

3.2 FRC Review of Licensee's Response

FRC has reviewed the licensee's response against the plant-specific Piping and Instrumentation Diagrams (P&IDs) [Ref. 3] that might have the valve configurations of concern.

FRC has also reviewed the efficacy of instituting periodic testing for the check valves involved in this particular application with respect to the reduction of the probability of an intersystem LOCA in the cold and hot legs of

the High-Head Safety Injection as well as in the Low-Head Safety Injection System piping.

In its review of the P&IDs [Ref. 3] for Robert E. Ginna Unit 1, FRC found the following two piping systems to be of concern:

> The High-Head Safety Injection System is connected to the two Reactor Coolant System loops by two hot and cold leg branches. Each branch contains two check valves and a motor-operated valve (MOV) in a series configuration of concern. In all four branches, the high-pressure/low-pressure interface is on the upstream side of the MOVs.
>
> The Low-Head Safety Injection System, connected by two branches directly to the Reactor Vessel, contains a single check valve and MOV in a series configuration of concern. Again, the high-pressure/low-pressure interface is located on the upstream side of the MOV.
>
> All valves of concern are listed for both systems below:

High-Head Safety Injection System

<u>Loop A, cold leg</u>

high-pressure check valve, 867B
high-pressure check valve, 878J
high-pressure MOV, 878D, normally open (n.o.)

<u>Loop A, hot leg</u>

high-pressure check valve, 877B
high-pressure check valve, 878H
high-pressure MOV, 878C, normally closed (n.c.)

<u>Loop B, cold leg</u>

high-pressure check valve, 867A
high-pressure check valve, 878G
high-pressure MOV, 878B, n.o.

<u>Loop B, hot leg</u>

high-pressure check valve, 877A
high-pressure check valve, 878F
high-pressure MOV, 878A, n.c.

Low-Head Safety Injection System

Reactor Vessel

Branch A
high-pressure check valve, 853A
high-pressure MOV, 852A

Branch B

high-pressure check valve, 853B
high-pressure MOV, 852B

In accordance with the criteria of Section 2.0, FRC found no other valve configurations of concern existing in this plant.

FRC reviewed the effectiveness of instituting periodic leakage testing of the check valves in these lines as a means of reducing the probability of an intersystem LOCA occurring. FRC found that introducing a program of check valve leakage testing in accordance with the criteria summarized in Section 2.0 will be an effective measure in substantially reducing the probability of an intersystem LOCA occurring in these lines, and a means of increasing the probability that these lines will be able to perform their safety-related functions. It is also a step toward achieving a corresponding reduction in the plant probability of an intersystem LOCA in Robert E. Ginna Unit 1.

4.0 CONCLUSION

It has been determined that the High-Head Safety Injection system, cold-leg branches, and the Low-Head Safety Injection system in Ginna Unit 1, incorporate valving in two of the configurations (identified in Figure 1) designated by the NRC as valve configurations of concern. Moreover, based on the previously docketed information and drawings made available for FRC review, FRC found that the High-head Safety Injection system, hot-leg branches also incorporate a valve configuration of concern. Thus, if the licensee's review of the valve configurations contained in the hot-leg branches of the High-Head Safety Injection system confirms FRC's finding, then valve configurations of concern existing in Ginna Unit 1 incorporate the valves as listed in Table 1.0.

If RGE modifies the Plant Technical Specifications for Robert E. Ginna Unit 1 to incorporate periodic testing (as delineated in Section 2.2) for the check valves itemized in Table 1.0, then FRC considers this an acceptable means of achieving plant compliance with the NRC staff objectives of Reference 1.

Table 1.0

Primary Coolant System Pressure Isolation Valves

System	Check Valve No.	Allowable Leakage*
High-Head Safety Injection		
Loop A		
cold Leg	867B	
	878J	
hot leg	877B	
	878H	
Loop B		
cold Leg	867A	
	878G	
hot leg	877A	
	878F	
Low-Head Safety Injection		
Branch A	853A	
Branch B	853B	

*To be provided by the licensee at a future date in accordance with Section 2.2.3.

5.0 REFERENCES

1. Generic NRC letter, dated 2/23/80, from Mr. D. G. Eisenhut, Department of Operating Reactors (DOR), to Mr. L. D. White Jr., Rochester Gas and Electric Corporation (RGE).

2. Rochester Gas and Electric Corporation's response to the NRC's letter, dated 3/14/80, from Mr. L. D. White (RGE) to Mr. D. G. Eisenhut (DOR).

3. List of examined P&IDs:

Rochester Gas and Electric Corporation drawings of Robert E. Ginna Unit 1:

33013-422-C

33013-424-B

33013-425-A

33013-426-D

33013-427-B

33013-432-A

33013-433-A

33013-434-0

33013-435-0

33013-436-0

ORDER FOR MODIFICATION OF LICENSE

(EVENT V)

GINNA PLANT

DOCKET NO. 50-244

Insert the following pages in the Technical Specifications.

Pages
3.3-2
3.3-3 *
3.3-4
4.3-2

*Included for format purposes only.

8105040111

a. The refueling water tank contains not less than 230,000 gallons of water, with a boron concentration of at least 2000 ppm.

b. Each accumulator is pressurized to at least 700 psig with an indicator level of at least 50% and a maximum of 82% with a boron concentration of at least 1800 ppm. Neither accumulator may be isolated.

c. Three safety injection pumps are operable.

d. Two residual heat removal pumps are operable.

e. Two residual heat exchangers are operable.

f. All valves, interlocks and piping associated with the above components which are required to function during accident conditions are operable.

g. A.C. Power shall be removed from the following valves with the valves in the open position: safety injection cold leg injection valves 878B and D, accumulator injection valves 841 and 865, and refueling water storage tank delivery valves 856. A.C. power shall be removed from safety injection hot leg injection valves 878A and C with the valves closed. As soon as appropriate modifications are complete, D.C. control power shall be removed from refueling water storage tank delivery valves 896A and B with the valves open. In the meantime, single failure protection for valves 896A and B will be provided by locking out A.C. power, remote from the control room, with operating personnel assigned specifically to restore A.C. power when the valves are required to function in the event of a loss-of-coolant accident.

h. Revisions to procedures for post-LOCA long term cooling as described in letters to the Nuclear Regulatory Commission from Rochester Gas and Electric Corporation dated April 1, 1975, April 30, 1975, and May 13, 1975, shall be implemented prior to reactor startup following the shutdown of March 10, 1975.

i. Check valves 853A, 853B, 867A, 867B, 878G, and 878J shall be operable with less than 5.0 gpm leakage each. The leakage requirements of Technical Specification 3.1.5.1 are still applicable.

3.3.1.2 During power operation, the requirements of 3.3.1.1 may be modified to allow one of the following components to be inoperable at any one time. If the system is not restored to meet the requirements of 3.3.1.1 within the time period specified, the reactor shall be placed in the hot shutdown condition. If the requirements of 3.3.1.1 are not satisfied within an additional 48 hours the reactor shall be placed in the cold shutdown condition.

a. One accumulator may be isolated for a period of up to one hour.

b. One safety injection pump may be out of service, provided the pump is restored to operable status within 24 hours. The other two safety injection pumps shall be tested to demonstrate operability prior to initiating repair of the inoperable pump.

c. One residual heat removal pump may be out of service provided the pump is restored to operable status within 24 hours. In addition, the following conditions must be satisified.

   (i) The other residual heat removal pump shall be tested to demonstrate operability prior to initiating repair of the inoperable pump.

(ii) The two reactor coolant drain tank pumps shall be tested and their operability demonstrated prior to initiating repairs of the inoperable residual heat removal pump.

d. One residual heat exchanger may be out of service for a period of no more than 24 hours.

e. Any valve required for the functioning of the safety injection or residual heat removal systems may be inoperable provided repairs are completed within 12 hours. Prior to initiating repairs, all valves in the system that provide the duplicate function shall be tested to demonstrate operability.

f. Power may be restored to any valve referenced in 3.3.1.1 g for the purposes of valve testing providing no more than one such valve has power restored and provided testing is completed and power removed within 12 hours.

g. Those check valves specified in 3.3.1.1 i may be inoperable (greater than 5.0 gpm leakage) provided the inline MOVs are de-energised closed and repairs are completed within 12 hours.

3.3.1.3 Except during diesel generator load and safeguard sequence testing or when the vessel head is removed or the steam generator manway is open no more than one safety injection pump shall be operable whenever the temperature of one or more of the RCS cold legs is ≤ 330°F.

3.3.1.3.1 Whenever only one safety injection pump may be operable by 3.3.1.3 at least two of the three safety injection pumps shall be demonstrated inoperable a minimum of once per twelve hours by verifying that the control switches are in the pull-stop position.

3.3.2 <u>Containment Cooling and Iodine Removal</u>

3.3.2.1 The reactor shall not be made critical except for low temperature physics tests, unless the following conditions are met:

a. The spray additive tank contains not less than 4500 gallons of solution with a sodium hydroxide concentration of not less than 30% by weight.

b. At least two containment spray pumps are operable.

c. Four fan cooler units are operable.

4.3.3 Check Valves

4.3.3.1 Leakage testing of check valves 853A, 853B, 867A, 867B, 878G and 878J shall be accomplished prior to criticality following (1) refueling, (2) cold shutdown, and (3) maintenance, repair or replacement work on the valves. Leakage may be measured indirectly from the performance of pressure indicators, system volume measurements or by direct measurement. Minimum test differential pressure shall be greater than 150 psid. See 4.3.3.4 for allowable leakage rates.

4.3.3.2 Check valves 878G and 878J will be tested for leakage following each safety injection flow test. Minimum test differential pressure shall be greater than 150 psid. See 4.3.3.4 for allowable leakage rates.

4.3.3.3 Motor-operated valves 878A and 878C and check valves 877A, 877B, 878F, and 878H shall be tested at the first refueling outage following the date of this order* to individually assure integrity in each hot leg high-head safety injection path. Testing shall also be performed after any opening of either motor-operated valve and at a minimum, once every 40 months. Opening of the motor-operated valves, and testing, are to be performed at a test pressure less than that of the lowest design pressure of any portion of the high-head safety injection system which may be pressurized during the test. Minimum test differential pressure shall be greater than 150 psid. See 4.3.3.4 for allowable leakage rates.

4.3.3.4 Allowable check valve leakage rates are as follows:

(a) Leakage rates less than or equal to 1.0 gpm are considered acceptable.

(b) Leakage rates greater than 1.0 gpm but less than or equal to 5.0 gpm are considered acceptable if the latest measured rate has not exceeded the rate determined by the previous test by an amount that reduces the margin between measured leakage rate and the maximum permissible rate of 5.0 gpm by 50% or greater.

(c) Leakage rates greater than 1.0 gpm but less than or equal to 5.0 gpm are considered unacceptable if the latest measured rate exceeded the rate determined by the previous test by an amount that reduces the margin between measured leakage rate and the maximum permissible rate of 5.0 gpm by 50% or greater.

(d) Leakage rates greater than 5.0 gpm are considered unacceptable.

Basis: This material surveillance program monitors changes in the fracture toughness properties of ferritic materials in the reactor vessel beltline region of the reactor resulting from exposure to neutron irradiation and the thermal environment. The test data obtained from this program will be used to determine the conditions under which the reactor vessel can be operated with adequate margins of safety against fracture throughout its service life.

*NRC Order dated April 20, 1981