COMBUSTION ENGINEERING OWNERS GROUP

CE NPSD-1198-NP, Rev 00

Low-Alloy Steel Component Corrosion Analysis Supporting Small-Diameter Alloy 600/690 Nozzle Repair/Replacement Programs

CEOG Task 1131

© CE Nuclear Power LLC

LEGAL NOTICE

This report was prepared as an account of work sponsored by the CE Owners Group and CE Nuclear Power LLC. Neither the CEOG nor CENP LLC, nor any person acting on their behalf:

A. Makes any warranty or representation, express or implied including the warranties of fitness for a particular purpose or merchantability, with respect to the accuracy, completeness, or usefulness of the information contained in this report, or that the use of any information, apparatus, method, or process disclosed in this report may not infringe privately owned rights; or

B. Assumes any liabilities with respect to the use of, or for damages resulting from the use of, any information, apparatus, method, or process disclosed in this report.

CE Nuclear Power LLC
P.O. Box 500
Windsor, Connecticut 06095-0500

COPYRIGHT NOTICE

This report has been prepared by CE Nuclear Power LLC (CENP), a subsidiary of Westinghouse Electric Company, for the members of the CE Owners Group participating in this Group Task, and bears a CE Nuclear Power copyright notice. Information in this report is the property of and contains copyright information owned by CENP and /or its subcontractors and suppliers. It is transmitted to you in confidence and trust, and you agree to treat this document and the information contained therein in strict accordance with the terms and conditions of the agreement under which it was provided to you.

As a participating member of this CE Owners Group task, you are permitted to make the number of copies of the information contained in this report which are necessary for your internal use in connection with your implementation of the report results for your plant(s) in your normal conduct of business. Should implementation of this report involve a third party, you are permitted to make the number of copies of the information contained in this report which are necessary for the third party's use in supporting your implementation at your plant(s) in your normal conduct of business if you have received the prior, written consent of CENP to transmit this information to a third party or parties. All copies made by you must include the copyright notice in all instances and the proprietary notice if the original was identified as proprietary.

The NRC is permitted to make the number of copies beyond those necessary for its internal use that are necessary in order to have one copy available for public viewing in the appropriate docket files in the NRC public document room in Washington, DC if the number of copies submitted is insufficient for this purpose, subject to the applicable federal regulations regarding restrictions on public disclosure to the extent such information has been identified as proprietary. Copies made by the NRC must include the copyright notice in all instances and the proprietary notice if the original was identified as proprietary.

© 2001 CE Nuclear Power LLC
P.O. Box 500
Windsor, Connecticut 06095-0500

All Rights Reserved

CE Nuclear Power LLC

CE NPSD-1198-NP

LOW ALLOY STEEL COMPONENT CORROSION ANALYSES SUPPORTING SMALL DIAMETER ALLOY 600/690 NOZZLE REPAIR/REPLACEMENT PROGRAMS

CEOG TASK 1131

Prepared for the
C-E OWNERS GROUP

Prepared by: J. F. Hall Date: 2/8/2001
J. F. Hall

Approved by: K. M. Rajan Date: 2/8/01
K. M. Rajan

WESTINGHOUSE ELECTRIC COMPANY
NUCLEAR SERVICES
2000 DAY HILL ROAD
WINDSOR, CONNECTICUT, USA

TABLE OF CONTENTS

SECTION	TITLE		PAGE
	ABSTRACT		iii
	ACRONYMS AND ABBREVIATIONS		iv
1	INTRODUCTION		
	1.1	Purpose	1
	1.2	Background	1
	1.3	Alloy 600 Program	1
2	CARBON AND LOW ALLOY STEEL BORATED WATER CORROSION		
	2.1	General	7
	2.2	Laboratory Corrosion Data	7
	2.3	Corrosion Rate Evaluation	9
	2.4	Estimate of Repair Lifetime	12
	2.5	Alternate Estimate of Carbon and Low Alloy Steel Corrosion	15
	2.6	Field Experience with Half-Nozzle Repairs	16
3	CARBON AND LOW ALLOY STEEL EVALUATION		
	3.1	General	19
	3.2	Calculation of the Stress Intensity Factor, K_I 19	
	3.3	Fatigue Crack Growth	21
	3.4	Stress Corrosion Cracking Assessment	22
4	CONCLUSION/FINDINGS		28
5	REFERENCES		30

LIST OF TABLES

Table 2-1	Summary of A302B Corrosion Data	17
Table 2-1	Corrosion Test Results	18

LIST OF FIGURES

Figure 1	Schematic Diagram of a Half-Nozzle Repair	5

LIST OF FIGURES (cont.)

Figure 2	Diagram of a Mechanical Nozzle Seal Assembly (MNSA)	6
Figure 3	The Influence of Oxygen and Temperature on Corrosion Potential of Low Alloy Steels in High Temperature Water (Reference 22)	26
Figure 4	Effects of Potential Upon the Reduction in Area to Fracture at Various Temperatures in Slow Strain Rate Tests (Reference 25)	27

ABSTRACT

Small-diameter NiCrFe Alloy 600 nozzles, such as hot leg piping RTD and sampling nozzles, pressurizer instrumentation nozzles, and pressurizer heater sleeves in CE Nuclear Power designed pressurized water reactors have developed leaks or partial through-wall cracks as a result of primary water stress corrosion cracking. The residual stresses imposed by the partial-penetration welds between the nozzles and the low alloy or carbon steel components are the driving force for crack initiation and propagation.

Two techniques, the "half-nozzle" weld repair and the mechanical nozzle seal assembly (MNSA) are currently used to repair/replace leaking Alloy 600 nozzles and as preventive repairs on nozzles that may leak in the future. In the "half-nozzle" repair technique, the Alloy 600 nozzle is cut outboard of the partial-penetration weld and replaced with a short Alloy 690 nozzle section that is welded to the component outside surface. Mechanical nozzle seal assemblies are installed to mechanically seal a leaking nozzle at the outer surface of the component.

This report provides bounding analyses for the maximum material degradation estimated to result from corrosion of the carbon or low alloy steel in the crevices between the nozzles and components. Results show that the quantity of material lost does not exceed ASME code limits. The scope of this report includes an evaluation of corrosion allowance and stress corrosion cracking associated with small diameter nozzle repairs.

Half-nozzle replacement and mechanical nozzle seal assemblies are shown to be effective repair/replacement methods for leaking small-diameter nozzles from a corrosion assessment perspective. The repair techniques are demonstrated to meet ASME code requirements.

ACRONYMS AND ABBREVIATIONS

ANO	Arkansas Nuclear One
ASME	American Society of Mechanical Engineers
B&W	Babcock and Wilcox
BWR	Boiling Water Reactor
CEOG	CE Owners Group
CR	Corrosion Rate
da/dn	Fatigue Crack Growth Rate
ID	Inside Diameter
IN	Increase
K_I	Stress Intensity Factor
MNSA	Mechanical Nozzle Seal Assembly
OBE	Operating Basis Earthquake
OD	Outside Diameter
PWR	Pressurized Water Reactor
PWSCC	Primary Water Stress Corrosion Cracking
RTD	Resistance temperature Detector
SCC	Stress Corrosion Cracking
SSE	Safe Shutdown Earthquake
UT	Ultrasonic Test

1.0 INTRODUCTION

1.1 PURPOSE

The purpose of this report is to demonstrate that unacceptable degradation of carbon or low alloy steel (base metal) does not occur when small diameter NiCrFe Alloy 600 nozzles in the primary pressure boundary of Combustion Engineering Owners Group (CEOG) plants are repaired/replaced using the "half nozzle" repair technique or mechanical seal nozzle assemblies (MNSAs). In these repairs, the carbon and low alloy steel base metals in the piping and pressurizers, which are normally clad with corrosion resistant materials, are left exposed to primary coolant. The types of degradation evaluated in this report include general corrosion from exposure to primary coolant, stress corrosion cracking, and fatigue crack growth.

1.2 BACKGROUND

Primary water stress corrosion cracking (PWSCC) of Alloy 600 nozzles in CEOG plants first occurred in 1986 when a leaking pressurizer instrument nozzle was discovered at San Onofre-3. Most of the CEOG plants have experienced nozzle or heater sleeve leaks since 1986. The first leaks in Alloy 600 nozzles were in pressurizer instrument nozzles and heater sleeves where operating temperatures are the highest (Reference 1). This was expected since laboratory testing indicated that primary water stress corrosion cracking (PWSCC) is temperature dependent. Later, leaking or cracked nozzles were discovered at several plants in hot leg piping applications where temperatures are lower.

1.3 ALLOY 600 PROGRAM

There are several applications of small diameter NiCrFe Alloy 600 nozzles within the primary coolant pressure boundaries of CEOG PWRs. These applications include pressurizer instrumentation nozzles and heater sleeves, piping RTD and sampling nozzles, steam generator instrumentation nozzles, and reactor vessel head vent lines and leakage monitor tubes. Alloy 600 nozzle materials were procured as either pipe (ASME SB-167) for the heater sleeves, vent lines and leakage monitor tubes, or as bar stock (ASME SB-166) for all other nozzles. References 2 and 3 present the available materials properties and installation data for all nozzle applications of Alloy 600 in CE designed PWRs.

The CEOG initiated an Alloy 600 program after the discovery of leaking pressurizer heater sleeves and a pressurizer instrumentation nozzle at Calvert Cliffs-2 in 1989. The objectives of this program were to identify the causative conditions for nozzle and heater sleeve PWSCC, identify other locations where PWSCC might occur, and address the

safety implications associated with nozzle cracking. The results (Reference 4) of this program indicated that:

These findings indicated that nozzle cracking was not a safety issue, but could be an economic issue because of the outages and activities to replace or repair leaking nozzles.

A review of the CEOG program products and plant experience since the completion of the CEOG program also indicated that:

Available laboratory data and field experience suggest that there may be future occurrences of PWSCC in Alloy 600 nozzles. As a result, several plants have initiated programs to replace, or take preventive measures for, nozzles in the pressurizers or hot leg piping. Two currently used nozzle repair techniques are the "half-nozzle" repair and the mechanical nozzle seal assembly (MNSA). Both techniques have been used to repair/replace leaking nozzles and as a preventive measure for non-leaking nozzles.

In the "half-nozzle" repair, nozzles are cut outboard of the partial penetration weld between the nozzles and pressurizer shell or pipe wall. The cut sections of the Alloy 600 nozzles are replaced with short sections (half-nozzles) of NiCrFe Alloy 690 which are welded to the outside surfaces of the pressurizers or pipes. The remainder of the Alloy 600 nozzles, including the partial penetration welds, remain in place (Figure 1).

With the MNSA repair (Figure 2), a leak or a potential leak is mechanically sealed on the outside surface of the pressurizer or pipe. The complete Alloy 600 nozzles are left in place.

Small gaps of 1/8 inch or less remain between the remnants of the Alloy 600 nozzles and the new Alloy 690 nozzles in the half-nozzle repair. As a result, primary coolant (borated water) will fill the crevice between the nozzle and the wall of the pressurizer or pipe. Low alloy and carbon steels used for reactor coolant system components are clad with stainless steel to minimize corrosion resulting from exposure to borated primary coolant. Since the crevice regions are not clad, the low alloy and carbon steels are exposed to borated water. Similarly, for the MNSA repair, the crevice regions will fill with borated water if through-wall cracks are present or develop in the nozzles.

Significant corrosion data are available regarding accelerated corrosion of carbon and low alloy steel materials that may occur if they are exposed to concentrated solutions of boric acid (References 5 and 6). There is no mechanism by which boric acid can concentrate in the crevice regions to the levels described in these references. However, some corrosion will occur at the boric acid concentrations typical of normal operating and shut down conditions. The corrosion rates are low for these conditions, but there has been some concern about the amount of corrosion that could occur over an extended period of time and its effect on nozzle repair lifetime.

A second concern involves the stress corrosion cracks that remain in the Alloy 600 nozzles after the repairs. The remnants of the Alloy 600 nozzles will likely contain the original cracks that required nozzle repair since PWSCC occurs near the partial penetration welds. The residual stresses from the original welding remain in the Alloy 600 nozzles. These stresses are the major driving force for crack initiation and propagation in Alloy 600 nozzles (Reference 7). Since the stresses remain, they could continue to propagate existing cracks or initiate and propagate new cracks. These cracks could grow by the SCC mechanism through the nozzle and weld materials to the carbon or low alloy steels. The low oxygen reducing conditions in PWRs will not result in rapid stress corrosion crack propagation in the carbon and low alloy steels. However, there may be some level of concern about the extent of SCC propagation over the remaining lifetimes of various plants.

In addition, cracks in the Alloy 600 weld metal that [

].

The CEOG sponsored a task to address the concerns cited above. The specific scope of work included evaluations of:

(1) The carbon and low alloy steel corrosion that could occur if a half-nozzle or MNSA repair is used on a leaking nozzle. This evaluation included reviewing available laboratory and field data on the corrosion of carbon and low alloy steels to develop an expected corrosion rate, determining the maximum allowable corrosion (in accordance with ASME Boiler and Pressure Vessel rules) for bounding case nozzle configurations, and estimating the predicted time to reach the degradation limit for those bounding nozzle configurations. This subtask built upon similar work previously performed for individual CEOG members that performed nozzle repair evaluations.

(2) The potential for stress corrosion cracking or fatigue crack growth in carbon and low alloy steel components. This evaluation included a review of available data on the stress corrosion cracking of carbon and low alloy steels in PWR primary side environments to demonstrate that such SCC is unlikely. The principal source for this [ ]. In addition, [ ] for bounding nozzle configurations.

Results of these evaluations are presented in subsequent sections of this report.

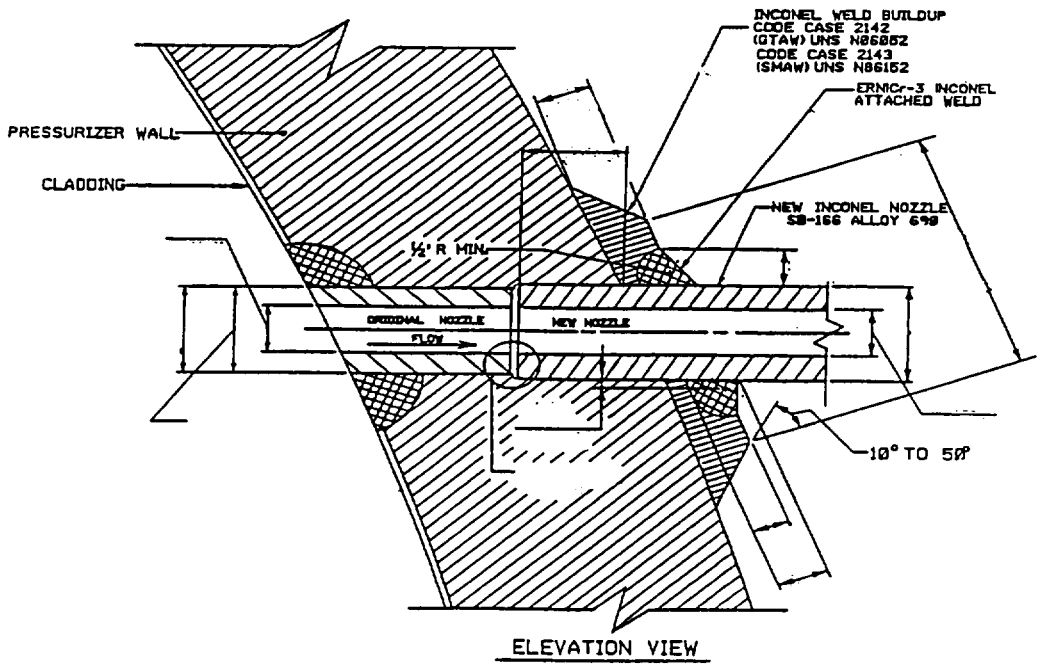

Figure 1. Schematic Diagram of a Half-Nozzle Repair

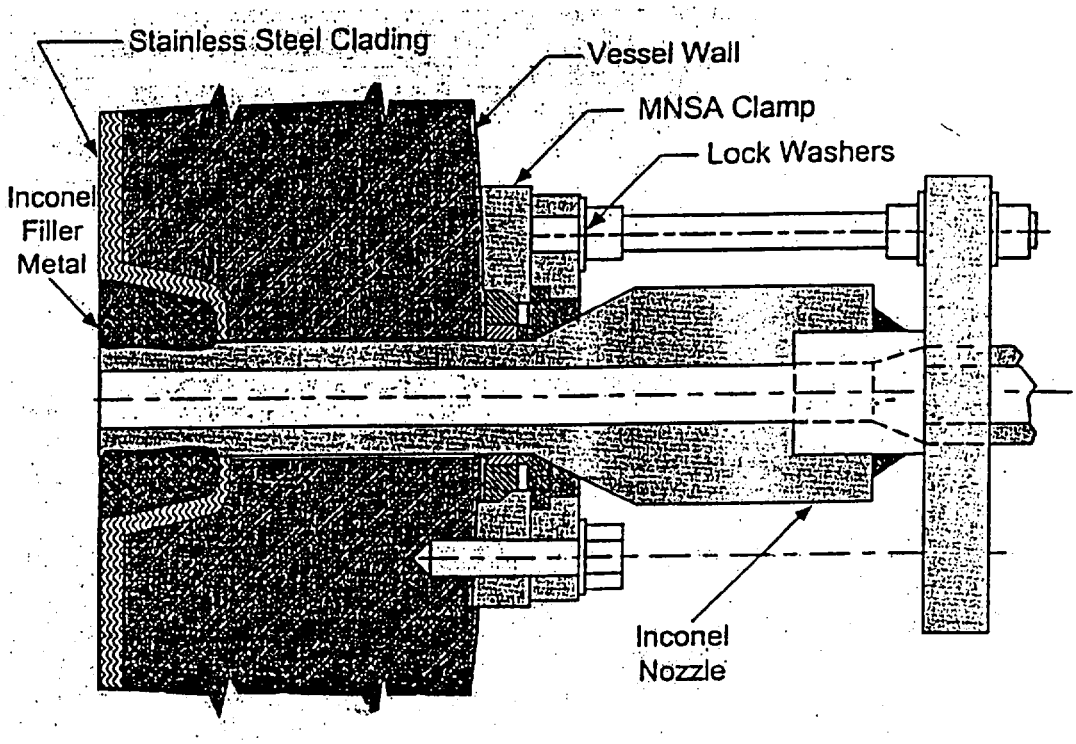

Figure 2. Diagram of a Mechanical Nozzle Seal Assembly (MNSA).

2.0 CARBON AND LOW ALLOY STEEL BORATED WATER CORROSION

2.1 GENERAL

The crevices between the nozzles and the pressurizer or pipe material will fill with borated water if a half-nozzle repair is implemented. Similarly, the crevice will fill with water if a MNSA repair is implemented and the nozzle has or develops a through-wall crack. Materials used for primary system components include SA 516 grade 70 carbon steel (pipe material) and SA 533 Grade B (and similar grades) low alloy steel (pressurizer shell material). When used as primary pressure boundary materials, carbon and low alloy steels are clad with corrosion resistant materials (generally weld-deposited stainless steels) to isolate these materials from the primary coolant, thereby minimizing corrosion and corrosion product release to the coolant. The inside diameters of holes, such as those used for RTD and sampling line nozzles, are not clad because, in the as-built condition, they are not exposed to borated water.

Under conditions where boric acid can concentrate, significant corrosion of carbon and low alloy steels can occur. Some corrosion will occur even at normal operating boron levels (typically, less than 1000 ppm). The expected lifetime of the half-nozzle repairs could be affected if sufficient corrosion of the steels in the crevice were to occur. This subtask [

] before ASME code requirements would be violated.

2.2 LABORATORY CORROSION DATA

The crevice between the nozzles and the component will fill with primary coolant. Because of the original ID weld and the OD weld associated with a half-nozzle repair, or the OD mechanical seal of the MNSA, the crevice solution cannot escape or be replenished (i.e., there is no concentration mechanism, and the level of boric acid will not exceed that of the bulk primary coolant). Therefore, the carbon or low alloy steel will be exposed to a stagnant solution of borated water.

[

]. In 1965, an inspection at Yankee Rowe discovered two small areas where the reactor vessel cladding had been breached. The defects were mechanical damage (fretting wear) caused by a surveillance capsule that came loose and released its mechanical test specimens and other debris into the reactor vessel lower head. These loose parts wore two areas (each about two inches square) through the type 304 stainless steel cladding, exposing the underlying base metal to the primary coolant. The cladding was in the form of eight foot by four foot stainless steel plates that were affixed to the vessel by intermittent spot welding. The spot welding left large areas where the cladding was not bonded to the low alloy steel vessel. A through-cladding defect allowed reactor coolant to enter the crevice between the cladding and the vessel, resulting in a significant area of low alloy steel being exposed to reactor coolant.

A test program evaluated the corrosion behavior of A302B low alloy steel under PWR shutdown and operating conditions, and assessed the potential for hydrogen embrittlement as a result of corrosion hydrogen absorption (a by-product of the corrosion process). A302B low alloy steel was used for several early reactor vessels, including Yankee Rowe. In this test program, specimens of A302B steel were exposed to aerated and deaerated solutions of boric acid (2000-2500 ppm boron) at temperatures between 70 and 500°F. The test included both electrically insulated specimens and specimens electrically grounded to Type 304 stainless steel to assess galvanic effects. The bulk of the testing was at low temperature (70 to 140°F) in aerated and deaerated solutions (2500 ppm boron). For these conditions, the test program characterized corrosion of A302B, permitting determination of steady-state corrosion rates. The program also included short-term tests (6-14 days) at 300-500°F in deaerated 2000 ppm boron solutions. These tests were not of sufficient duration to characterize the long-term corrosion rates at startup and operating conditions. Table 2-1 summarizes the data from this laboratory program.

The results indicated that [

]. This temperature was selected as most representative of PWR shutdown conditions.

At 500°F in deaerated conditions, the maximum corrosion rate was [ ]. The average rate for six (6) specimens was [ ]. The test time was not sufficient for corrosion to reach a steady state condition. The rates for such a short term test would be expected to be higher than long term rates since corrosion in carbon and low alloy steels follows a [ ] estimated the steady-state high temperature corrosion rate to be [ ], which was deemed negligible as far as vessel integrity was concerned. The data also indicated that very little pitting occurred (uniform corrosion, thus the test results would be indicative of the true penetration of the steel) and that there was no significant galvanic or crevice corrosion.

[ ] from a program in which carbon steel specimens were tested in a deaerated 1000 ppm boron solution at 392°F (significantly below primary system operating temperature). The data indicated [ ]. At 590°F, in a 3000 ppm boron solution, the carbon steel [ ] for the steady state corrosion rate.

Table 2-2 presents [ ]. There was little variation in the corrosion rates for the individual specimens of the two grades of steel. These results are consistent with [ ] since these data include the initial transient corrosion rates, which are higher than the steady-state rates.

The above data were used to estimate carbon and low alloy steel corrosion at operating and shutdown conditions. At intermediate temperatures during return to power operations, the steel in the crevice region will be exposed for short times to a borated solution containing dissolved oxygen. Higher corrosion rates are expected for this phase of plant operations. [ ] to evaluate corrosion under these conditions. Specimens of SA 533B and SA 508 Class 2 low alloy steels, as well as specimens containing manual welds, were tested in an autoclave environment. Crevice and galvanic conditions were simulated in some specimens. The test environment was [ ]. Visually, the corrosion was uniform and there was no preferential attack of specimens with crevices or any indications of galvanic attack.

2.3 CORROSION RATE EVALUATION

The first approach to evaluate the carbon steel corrosion in the half-nozzle crevice used the data described above to develop a corrosion rate, which could be used to estimate

corrosion for the remaining plant lifetimes. The following assumptions were used in developing an overall corrosion rate for carbon and low alloy steels in a crevice environment and an estimate of the total corrosion for the remaining plant lifetimes:

(1) The corrosion rate for [ ]. The pressure boundary materials in CEOG plants are typically these grades [ ]. There are minor compositional differences between the various grades as shown below.

COMPOSITION, Weight Percent

Element	SA 516 Grade 70	A 302B	SA 533B	SA508-2
C, max	0.27	0.25	0.25	0.27
Mn	0.79-1.30	1.07-1.62	1.10-1.55	0.50-0.90
P, max	0.035	0.035	0.035	0.25
S, max.	0.040	0.040	0.040	0.0.25
Si	0.13-0.45	0.13-0.45	0.13-0.32	0.15-0.35
Cr	NR	NR	NR	0.25-0.45
Ni	NR	NR	0.37-0.73	0.50-1.00
Mo	NR	0.41-0.64	0.41-0.64	0.55-0.70
Fe	Balance	Balance	Balance	Balance

NR = No requirement

The differences in Mo, Mn and C contents will not affect corrosion characteristics as these elements are not associated with corrosion resistance or lack thereof. Thus, there should not be a significant difference in corrosion rates between the various materials.

(2) [ ]. This is discussed further in Section 2.4.

(3) When operating, [ ].

(4) When shut down, [ ].

(5) CEOG plants will [ ].

2.3.1 High Temperature Corrosion Rate

CEOG plants operate at hot leg coolant temperatures of approximately 585°F to 613°F; this is not expected to change significantly in the future. All pressurizers, except for Palisades and Fort Calhoun, operate at 653°F. The temperature in the Palisades and Fort Calhoun pressurizers is approximately 643°F. The maximum test temperature in [ ] in deaerated borated water which indicated decreasing corrosion rates with increasing temperature. The decreasing corrosion is a result of the characteristics of boric acid, which at reactor operating temperatures is [ ].

[ ]. For these specimens, the [ ], respectively. As indicated above, these rates are conservative because corrosion in carbon and low alloy steels follows a logarithmic or parabolic rate law with several weeks usually required before a steady state corrosion rate is attained. Thus, the actual maximum rate will be significantly lower than [ ]. This value is supported by data from the tests at [ ]. For this evaluation, a corrosion rate at operating conditions (hot leg and pressurizer conditions) [ ].

2.3.2 Intermediate Temperature Corrosion Rate

The crevice region may be filled with aerated water when a plant returns to operation from a shutdown condition. The oxygen in that water will be consumed by corrosion of the steel and, to a lesser extent, of the Alloy 600 and 690 nozzle material, eventually establishing a low oxygen condition. The corrosion rate will be higher for the relatively short time when the temperature is at moderate levels. [ ]. This value is conservative because the specimens were tested in a large autoclave and the amount of oxygen available for low alloy steel corrosion was greater than would have been the case for the half-nozzle or MNSA repair crevice geometry. For this evaluation, [ ].

2.3.3 Low Temperature Corrosion Rate

The primary coolant will become an aerated solution of boric acid during refueling outages and other outages. [ ] average and maximum corrosion rates of [
]. The test duration was sufficiently long for a steady-state corrosion rate to be established. For this evaluation, a [ ] the corrosion that will occur during plant shutdowns.

2.3.4 Overall Corrosion Rate

An overall corrosion rate for CEOG plants, based on [

], was determined as follows:

[ ] (1)

Examination of the individual terms indicates that most of the calculated corrosion will occur during [
].

2.4 ESTIMATE OF REPAIR LIFETIME

Reference 12 is a calculation to determine how much corrosion of nozzle/heater sleeve bores is acceptable (that is, how much larger can the bore hole become before ASME Boiler and Pressure Vessel Code requirements are exceeded). The calculation evaluated the corrosion associated with a potential repair, but is not a full and complete ASME Code evaluation of the acceptability of the repair method.

The methodology of the calculation has been previously used to evaluate nozzle repairs at several CEOG plants. The approach was to determine the maximum allowable hole size relative to: (1) the reduction in the effective weld shear area, and (2) the required area of reinforcement for the holes.

As the diameter of a nozzle or sleeve hole increases as a result of corrosion, the area of effective weld decreases while the applied pressure blow-off load increases. The first calculation determined the maximum hole diameter at which the strength of the weld area (new OD weld) is able to resist the pressure blow-off loads. The evaluation was based on a weld geometry similar to that shown in Figure 1 for all small nozzle bores in the CEOG plants. The J-weld of the nozzle repair must be able to withstand the internal pressure on the diameter of the corroded hole. The strength of the weld was determined by calculating the allowable shear stress of the weld in accordance with paragraph NB-3227.2 (a) of the ASME Code (Reference 13). The allowable diameter of a corroded hole, based on the weld shear strength, was calculated by requiring that the shear stress in

the weld resulting from pressure be equal to the allowable shear stress. A pressure of [ ] was used for this calculation. The calculation indicated [ ] before reaching the ASME Code allowable shear stress in the J-weld. The results are applicable to all of the small diameter Alloy 600 nozzles and heater sleeves in the pressurizer, hot and cold-leg piping, and steam generator primary head in all CEOG plants.

The second issue addressed was the required area of reinforcement for a hole. The ASME Code requirements for reinforcement were used to determine the maximum allowable hole size for each type small diameter Alloy 600 penetration in each of the CEOG plants. The applications analyzed include the pressurizer upper head nozzles, the pressurizer side (lower shell) nozzles, the pressurizer lower head nozzles, the pressurizer heater sleeves, hot leg and cold leg piping nozzles, and steam generator primary head nozzles. [ ] provides the allowable (meets reinforcement requirements) diameters for each nozzle type for the CEOG plants. There is a significant variation in the allowable diameters based on reinforcement requirements with the smallest diameters being the cold leg piping and pressurizer side shell nozzles at Palisades. It should be emphasized that a substantial margin of safety is included in the reinforcement criterion, and a failure of the repair weld will not occur upon reaching this limit. Nevertheless, this limit was used as the basis for estimating the lifetime of the nozzle repair. With respect to the specific Palisades nozzles described, [

].

[ ]
plant with the limiting diameter being the smaller of the diameters as calculated by the above methods. Cold leg nozzles are not considered the most limiting nozzles with respect to PWSCC initiation based on field experience to date and laboratory test results. Temperature is a significant environmental factor influencing PWSCC initiation and growth based on laboratory data and field experience (Reference 14). Laboratory testing has indicated that PWSCC initiation and growth varies like a standard thermally activated process, i.e., in accordance with $e^{-Q/RT}$ where Q is the activation energy of 40 to 50 kcal/mole, R is the universal gas constant (1.985×10^{-3} kcal/°K mole) and T is the temperature in degrees Kelvin. This relationship can be used to estimate the effect of temperature differences on PWSCC initiation if all other variables are essentially unchanged. The relationship can also be used to estimate the differences in initiation time between hot and cold leg pipe locations. For example, for ANO-2 which has hot and cold leg temperatures of 600 and 544°F, respectively, this relationship predicts [

], assuming all other conditions are the same. Alloy 600 nozzle field experience also supports the temperature dependency. The first leaking nozzles occurred in pressurizer locations where temperatures are significantly higher than other RCS locations. Later, some hot leg nozzles developed cracks, but to date no cold leg nozzles have developed cracks even though material properties, product form, and fabrication techniques are nominally the same. For this reason, [

].

The allowable carbon or low alloy steel corrosion for each nozzle type at each CEOG plant can be calculated [ ]. Table 2 provides the limiting allowable diameter for each nozzle type on a plant by plant basis. The limiting allowable diameter was the smaller of the diameters calculated as described above. Table 1 includes the bore diameter for each type nozzle, also on a plant by plant basis. The allowable increase in the diameter (because of corrosion) of the nozzle bores [

].

The most limiting hot leg pipe nozzles [ ], where the allowable increase in diameter was calculated as

[ ] (2)

Hot leg nozzles at other CEOG plants [
].

The most limiting pressurizer nozzles [
].

[ ], the allowable increase in diameter was

[ ] (3)

The remaining side shell nozzles had allowable increases in [ ] except for [ ]. The pressurizer upper head nozzles, by comparison, [
]. The bottom head nozzles had allowable increases in diameters of [ ]. The heater sleeves had allowable increases in [ ].

Section 2.3 estimated that corrosion will [ ]. Since the entire hole ID surface will corrode uniformly, [
] because of corrosion. Dividing the allowable increases in diameter by the estimated corrosion rate (rate at which the diameter will increase) provides an estimate of the repair lifetime considering general corrosion of the carbon or low alloy steel. For the [ ], can be estimated as

[ ]. (4)

The most limiting pressurizer nozzles were [ ] whose estimated repair lifetime was calculated as

[ ]. (5)

All other pressurizer nozzles and heater sleeves at all CEOG plants had estimated repair lifetimes [ ].

The most limiting pressurizer heater sleeves, which were at several CEOG plants, had allowable [ ], which resulted in an estimated lifetime of

[ ] (6)

2.5 ALTERNATE ESTIMATE OF CARBON AND LOW ALLOY STEEL CORROSION

The corrosion rate previously described is applicable to the carbon and low alloy steels exposed to bulk solutions of boric acid and not to solutions confined in a crevice where the volume of the solution is such that the solution cannot be replenished (or refreshed). When corrosion occurs, the crevice region will fill with corrosion products such as Fe_2O_3, Fe_3O_4, FeOOH, or iron borates depending on solution conditions (temperature, oxygen level, etc.). The corrosion products occupy a greater volume than the non-corroded base metal from which they originated. The ratio of corrosion product volume to that of the non-corroded material, the Pilling-Bedworth ratio, is typically about 2. The presence of corrosion products in the crevice will prevent access of the corrodent (borated water) to the carbon and low alloy steel, reducing the corrosion rate. Oxides are typically porous, containing cracks and voids, and will normally permit some access of the coolant to the steel. However, the closed crevice geometry, with only one narrow gap for the half-nozzle repair, will confine corrosion products, preventing any loss from flaking or spalling. Similarly, stress corrosion cracks are tight and will also keep corrosion products in the crevice in a MNSA repair. Further corrosion will result in the crevice corrosion products becoming denser and less permeable to the primary coolant. Eventually, the corrosion process will stifle because the steel will become isolated from the coolant.

An estimate can be made of the amount of corrosion that will occur before the crevice is packed and the process stifles. [ ] and the nozzle OD, the [ ]. If the ratio of corrosion product to base metal is [ ] will pack the crevice with corrosion products. Since access of the coolant will be severely restricted, the corrosion rate will be reduced or eliminated. Since there is no way to remove the corrosion products from the crevices between nozzles and components, this is a reasonable estimate of the lifetime corrosion resulting from nozzle repair.

The hole diameter [ ] for the most limiting nozzle before the ASME Code requirement is violated, Reference 12. For this alternate evaluation, an increase in the [ ] is predicted. This is significantly less than the [ ], indicating that corrosion of the nozzle bore will not significantly affect the service lifetime of the nozzle repairs for CEOG plants.

2.6 FIELD EXPERIENCE WITH HALF-NOZZLE REPAIRS

The half-nozzle repair has been used to repair leaking or cracked nozzles at several PWRs. The repair with the longest service history is at ANO-1, a B&W unit that developed a leak in a pressurizer vapor space instrumentation nozzle in December, 1990. The leak was repaired using a short Alloy 690 nozzle and a half-nozzle repair. The ANO-1 repair is exposed to a high temperature steam environment which contains some boron, but not the same level as a pipe nozzle, and to conditions that are more stagnant, i.e. the environment outside the nozzle is not flowing water like in a pipe. The plant qualified a UT technique to inspect the low alloy steel base metal for general corrosion, applied this technique at the 1st and 2nd refueling outages after the repair, and currently conducts an inspection on an every-other-cycle basis. After approximately 10 years of service, there has been no indication of general corrosion of the low alloy steel base metal.

In 1993, San Onofre-3 performed a similar repair on a leaking hot leg nozzle. An inspection was conducted after 5 years of service by removing the half-nozzle to address boric acid corrosion concerns. Visual observation indicated only minor pitting of the base metal. The depths of the pits were 0.005 to 0.008 inch as determined from measurements of a mold of the hole. The half-nozzle repair was reinstalled.

In 1994, Florida Power & Light also made three half-nozzle repairs to pressurizer vapor space instrumentation nozzles at St Lucie-2 (Reference 15). These continue in service after approximately 6 years without any indications of degradation of the low alloy steel pressurizer material based on UT inspections of the repairs.

Other plants have operated with carbon or low alloy steels exposed to primary coolant without any noticeable degradation. These include Yankee Rowe, as previously described, which operated from 1965 until the end of life with a cladding breach without apparent reactor vessel degradation (Reference 9). Palo Verde-1 has always operated with a small section of a pump body exposed to primary coolant. In 1994, Calvert Cliffs-1 removed a leaking heater sleeve and plugged the hole without adding a corrosion resistant sleeve to protect the pressurizer shell. As a result, the unclad pressurizer shell material is exposed to the primary coolant, and has operated for over 5 years without any indications of corrosion.

In summary, there have been several applications of half-nozzle type repairs in PWR primary system components, and other occurrences of carbon and low alloy steels being

exposed to the primary coolant. These have operated for years without any indications of degradation.

Table 2-1

SUMMARY OF A302B CORROSION DATA

Temp, °F	# Samples	Coupled	Time, Days	Rate, mpy
140*	4	NO	8	
	4	NO	23	
	2	NO	58	
	2	NO	62	
	2	NO	120	
100*	4	NO	8	
	4	NO	23	
	2	NO	121	
70*	4	NO	8	
	4	NO	23	
	2	NO	58	
	2	NO	62	
	2	NO	122	
140*	4	YES	20	
	2	YES	38	
	2	YES	73	
	2	YES	151	
100*	4	YES	13	
	2	YES	38	
	2	YES	67	
	2	YES	146	
70*	4	YES	13	
	2	YES	39	
	2	YES	68	
	2	YES	151	
500	6	YES	7	
400	6	YES	6	
300	6	YES	7	
	6	YES	14	

* aerated conditions

YES - galvanically coupled to Type 304 stainless steel
NO – not galvanically coupled

TABLE 2-2

CORROSION TEST RESULTS

3.0 CARBON AND LOW ALLOY STEEL EVALUATION

3.1 GENERAL

A section of Alloy 600 nozzle and the partial penetration weld between the nozzle and component will remain after a half nozzle repair/replacement is completed. The repair process will not affect residual stresses from the original nozzle installation welding process. Reference 7 and similar studies have indicated that residual stresses are the major driving force for SCC initiation and propagation in Alloy 600 nozzles. Cracks present in the nozzles or weld metals may continue to propagate, and new cracks may initiate and propagate through the nozzle and weld metals. The process of initiating and propagating cracks will eventually relieve the weld residual stresses, but not before the cracks have propagated through the weld metal to the base metal. Although weld residual stresses may be relieved, stresses in the pipe or pressurizer may be sufficient to propagate the cracks by a fatigue or a stress corrosion process. As a result, this repair evaluation addresses the potential for crack growth by fatigue or stress corrosion cracking in carbon or low alloy steel components in the vicinity of small diameter Alloy 600 nozzles with through-wall cracks.

To address fatigue crack growth, a calculation was performed that assumed that a crack had propagated through the nozzle and associated weld metal and had reached the interface with the carbon or low alloy steel. The calculation was performed in accordance with ASME code Section XI requirements for two bounding nozzles, one in the hot leg piping and one in the pressurizer. A flaw shape was assumed, a fracture mechanics-based stress intensity factor (K_I) was defined, ranges of K_I (ΔK_I) were determined for all applicable plant transients, incremental crack growth was determined for each transient, and the calculated end-of-life crack size determined. The final crack size was compared with the maximum allowable flaw size to demonstrate fatigue crack growth over remaining lifetimes would be acceptable.

The potential for stress corrosion crack growth was assessed by reviewing available laboratory and field data to determine if SCC of carbon and low alloy steel at PWR primary side conditions was likely. If the data indicated this possibility, crack growth would be assessed using the calculated K_I and available stress corrosion crack data.

3.2 CALCULATION OF THE STRESS INTENSITY FACTOR, K_I

Reference 16 provides a detailed evaluation of fatigue crack growth in carbon and low alloy steel base metal in the vicinity of small diameter Alloy 600 nozzles with through-wall stress corrosion cracks. This section summarizes the methodology employed and the results obtained from this evaluation. Reference 16 provides the details, assumptions, and results of the calculations.

Small diameter Alloy 600 nozzles are installed in the hot and cold leg piping, pressurizers and steam generator primary heads. These components operate at different temperatures, and thus the Alloy 600 nozzles are exposed to different temperatures. Section 2.4 and Reference 16 noted that temperature is the most significant environmental factor affecting PWSCC. The time to crack initiation varies like a standard thermally- activated process, i.e., in accordance with the Arrhenius relationship with activation energy of about 50-kcal/°K mole. Section 2.4 noted that this relationship [

]. The pressurizer temperatures are even higher (643-653°F), which would indicate even shorter times to crack initiation, assuming all other materials and stress conditions are the same. Field experience with Alloy 600 nozzles and Alloy 600 steam generator tubes has confirmed the extensive laboratory observations of this temperature dependency. The first nozzle failures occurred in pressurizer applications, and later some hot leg pipe nozzles experienced PWSCC, but there have been no failures at cold leg temperatures. Since nozzle cracking at cold leg conditions is not expected, the nozzle applications at cold leg temperatures were not included in the Reference 16 evaluations, but they are bounded by those evaluations.

The evaluations of the nozzles were performed in accordance with the ASME Code (Reference 13), Section XI Appendix A, Flaw Acceptance Criteria. Bounding nozzles, based on stress conditions, were determined for pressurizer and hot leg pipe applications. The process of identifying the bounding nozzles is described in Reference 16.

The K_I values were calculated for the bounding cases by assuming that the stress corrosion cracks initiated at the ID of the nozzles had propagated through the nozzle material, through the J-weld and weld butter, and to have reached the carbon or low alloy steel base metal. For the pressurizer nozzle, the crack [

]. This shape is approximately [ ]. For the bounding hot leg nozzle, [

].

For the pressurizer nozzle, the selected flaw orientation was such that the pressure and thermal stresses would act simultaneously to open the postulated flaw. The K_I associated with the flaw will be affected by the load state at the J-weld. By design, the instrumentation nozzle transmits essentially no loads to the weld. Since the initial crack was assumed to have propagated completely through the weld and weld butter, residual stresses from the weld are not applicable. However, loads related to pressure and temperature are present in the pressurizer. Similar load conditions are present in the hot leg piping. These loads were used to calculate stresses in the base metal for normal, emergency, upset, and faulted conditions.

The stress intensity factors, K_I, were calculated for each location as described in Sections 6.1.3 and 6.2.3 of Reference 16. A maximum allowable flaw size for each bounding nozzle location was then calculated by increasing the depths of the postulated flaws until

the resulting K_I equaled the allowable fracture toughness which, based on ASME Code IWB-3612 criteria, was 79.1 ksi-in$^{1/2}$. For the pressurizer nozzle location, the critical flaw depth [ ]. For the hot leg nozzle location, the maximum allowable flaw size [ ].

3.3 Fatigue Crack Growth

Fatigue crack growth of the initial postulated flaws as a result of plant operations was evaluated. The relationships for the fatigue crack growth rate, da/dn, as defined in Article A-4300 of Section XI of the ASME Code, are

$$da/dn = 1.20 \times 10^{-11}\ \Delta K^{5.95} \quad \text{for } \Delta K > 12.04 \text{ ksi-in}^{1/2} \qquad (7)$$

$$da/dn = 2.53 \times 10^{-7}\ \Delta K^{1.95} \quad \text{for } \Delta K > 12.04 \text{ ksi-in}^{1/2} \qquad (8)$$

For the pressurizer, Reference 16 indicated that the [ ]. The operating pressure of 2250 psia was [ ]. The design conditions and transients include [ ] but there are also [ ]. Since the heatup/cool down cycle thermal stresses bound the leak test, these [ ]. The crack growth analysis was performed as follows:

For the pressurizer application, the [ ]. The calculation indicated that this is acceptable for normal operating and upset conditions. The pressurizer nozzle location was also evaluated for emergency and faulted conditions using the end-of life flaw depth. The end-of–life flaw must be shown to meet the ASME Code IWB-3612 criteria under these conditions. The calculated [ ] which was less than the allowable fracture toughness of 177 ksi-in$^{1/2}$ and, thus, the criteria for emergency and faulted conditions were satisfied.

For the hot leg nozzle application, a similar approach was used except the [ ]. The [ ] in the same manner as the pressurizer case. The remaining upset events (reactor trips, loss of load, loss of primary coolant flow) were combined into one category for the crack growth calculation. During the calculations, the [ ] were considered first, followed by the [ ]. The crack growth calculation proceeded in the same manner as for the pressurizer. The initial crack [ ].

For the hot leg piping application, the [ ] for a [ ]. When compared to the [ ] for the piping application, these flaw sizes are acceptable for normal operating and upset conditions. The emergency and faulted conditions of loss of secondary pressure and SSE were also evaluated to demonstrate that for end-of-life flaw sizes, the fracture toughness criteria of IWB-3612 would be met. Both longitudinal and axial end-of life cracks were evaluated. [ ]. Therefore, the emergency and faulted conditions for the hot leg piping bounding nozzles met the ASME code requirements.

3.4 STRESS CORROSION CRACKING ASSESSMENT

This task evaluated the possibility that a crack that had propagated through an Alloy 600 nozzle and weld metal would continue to propagate by a stress corrosion mechanism through the carbon or low alloy steel component. Field experience, especially for PWRs, suggested a low probability that this could occur. However, the literature does contain some laboratory test data that suggests that SCC can occur in pressure vessel type steels if the right combination of environmental, material and stress conditions are present.

The available laboratory and field data were reviewed to address this potential issue. Reference 17 presented the results of a detailed evaluation, including a review of laboratory data and field experience, of the potential for SCC in pressure vessel steels. The review of the earlier work was supplemented by additional reviews of several more recent papers on the SCC of low alloy or carbon steel.

Stress corrosion cracking is dependent on the simultaneous presence of three elements: an aggressive environment, a susceptible material condition, and a stress (applied + residual) in excess of some threshold value. If any element is missing, SCC will not occur. The following paragraphs address these elements relative to SCC of carbon and low alloy steels.

3.4.1 Environmental Factors

An extensive collection of papers, some of which are summarized in Reference 17, indicates that the key environmental factor affecting SCC and crack growth rates is the oxidizing potential (primarily dissolved oxygen content) of the coolant. More recent papers also support the key role of dissolved oxygen in the SCC of low alloy and carbon steels (References 18 through 21). Dissolved oxygen significantly affects the electrochemical potential (corrosion potential) of all materials. In a typical PWR, dissolved oxygen levels in the primary coolant during normal operation are less than 10 ppb.

At coolant temperatures of about 600°F, the corrosion potential of carbon and low alloy steels in a PWR environment is on the order of – 600 mV referenced to the standard hydrogen electrode. This low value of corrosion potential is the result of the hydrogen overpressure in the PWR primary coolant system which results in reducing conditions. Figure 3 indicates a decrease in corrosion potential with decreasing dissolved oxygen levels. At about 550°F, corrosion potentials are above –200mV at 100 ppb dissolved O_2 and at 30 ppb and lower, the corrosion potential is below – 600mV. The corrosion potential is also reduced by increased temperature (Reference 22). More recent papers, References 23 and 24, confirm this temperature effect. The minor variations in corrosion potential noted for the different grades of steels are related to sulfur content.

Corrosion tests of pressure vessel steels indicate there is a critical corrosion potential of approximately – 200 mV below which stress corrosion crack initiation or growth of existing defects does not occur. Figure 4, for example, shows that below about – 200 mv, at 550°F (288°C), there was no indication of SCC. Above about - 200 mV there was a marked effect as indicated by significantly reduced reductions in area in test specimens (Reference 25).

Cracking tended not to occur in numerous laboratory tests where conditions simulating PWR coolant were present. Control of the environment (particularly O_2 levels) was suspect in the few tests where cracking did occur at apparent PWR conditions (Reference 18).

Most of the studies in which stress corrosion cracking of carbon and low alloy steels occurred were conducted at simulated BWR normal water chemistry conditions (200 ppb oxygen, 550°F). Reference 17 indicated that at these environmental conditions, with a sufficiently high stress (stress intensity factors, K_I, of about 20 ksi-in$^{1/2}$) and sulfur levels of 0.010% or higher, carbon and low alloy steels readily crack. Cracking is greatly reduced or eliminated at lower oxygen levels.

As noted above, there have been many studies involving numerous laboratories, many specimens, and various environmental conditions, which have addressed SCC of pressure vessel steels. These studies indicate that SCC did not occur, even over extended periods of testing, under conditions of low potential and good water purity (Reference 18).

There is one additional consideration unique to half-nozzle and MNSA type repairs. High oxygen levels may be present in the crevice between the Alloy 600 nozzles and the components during start-ups from refuelings and other outages when the primary system is open. However, the oxygen level will be quickly reduced by the formation of corrosion products as a result of steel corrosion and the absence of an oxygen replenishment mechanism. Thus, the low oxygen condition will be quickly re-established and the potential for SCC initiation or propagation should be eliminated. Significant propagation during these brief periods of elevated oxygen levels will not occur.

Other contaminants (copper ions, chlorides, sulfates, etc.) also increase the potential for SCC of carbon and low alloy steels. Such species are believed responsible for girth weld SCC seen on the secondary side of some steam generators (Reference 19). However, there are no copper alloys in the primary system of CEOG plants, and chlorides and sulfates are maintained at low levels. Thus, the environmental conditions expected in PWRs indicate that SCC initiation and propagation in the carbon or low alloy steels component base metals as a result of cracked Alloy 600 nozzles left in place during nozzle repair is not a concern.

3.4.2 Material Factors

The previous section indicated that the normal PWR environment is not conducive to stress corrosion crack propagation in pressure vessel steels. The steels which have been tested had a range of sulfur levels, manganese sulfide inclusion shape and distribution, and microstructural conditions (References 17, 23, and 24). Under PWR conditions, crack growth did not occur. Thus, the material characteristics will not affect stress corrosion crack susceptibilities of CEOG plant components.

3.4.3 Stress Intensity Effects

The third element required for SCC is stress which will be present in the components as a result of operational conditions. Reference 16 indicates that in the bounding case nozzle, the applied stress intensity factor, K_I, will be approximately 54 ksi-in$^{1/2}$ for the pressurizer nozzle crack geometry assumed. This value could be compared to an experimentally determined value for K_{ISCC}, but there are no relevant data for K_{ISCC} for pressure vessel steels (Reference 17). The tests which have been conducted indicated that, for low potential (PWR) conditions, there was no SCC growth of existing defects even at high K_I levels.

3.4.4 Field Experience

The review of service experience did not identify any incidents of defects or cracks suspected as being the result of stress corrosion cracking in PWR reactor vessels or other carbon or low alloy steel components exposed to primary coolant in an unclad condition. One event involving inspection of the Yankee Rowe reactor vessel was significant. The vessel was inspected with high resolution ultrasonic techniques about 20 years after the cladding was damaged to look for evidence of SCC associated with the resistance spot

welds used to attach the stainless steel clad to the vessel. There was no evidence of SCC noted during the inspection (Reference 17).

There have been occurrences of steam generator shell cracking, but this cracking was associated with the secondary side environment (References 17 and 19). The affected components were steam generators of a particular design fabricated from A302B steel. Cracking was attributed to contaminants from condenser cooling water, dissolved oxygen, and copper. The presence of the latter two will result in a more oxidizing environment (higher corrosion potentials) which laboratory tests and BWR field experience indicate will cause SCC if high stresses are present (References 17 and 20). These occurrences are not relevant to PWR primary side SCC.

In summary, PWR field experience is consistent with laboratory observations and confirms that SCC of carbon and low alloy steel components as a result of nozzle repairs is not likely for CEOG plants.

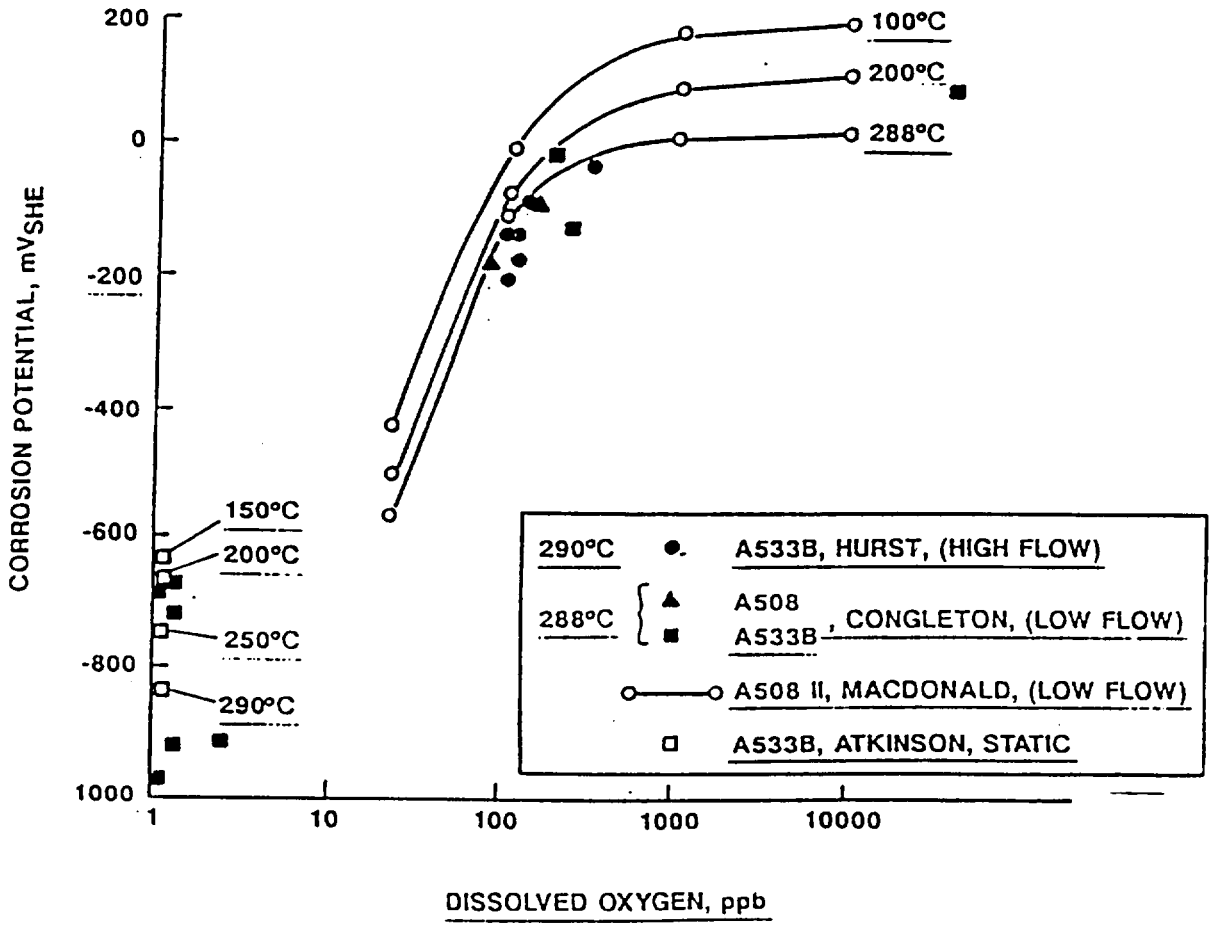

Figure 3. The Influence of Oxygen and Temperature on Corrosion Potential of Low Alloy Steels in High Temperature Water (Reference 22).

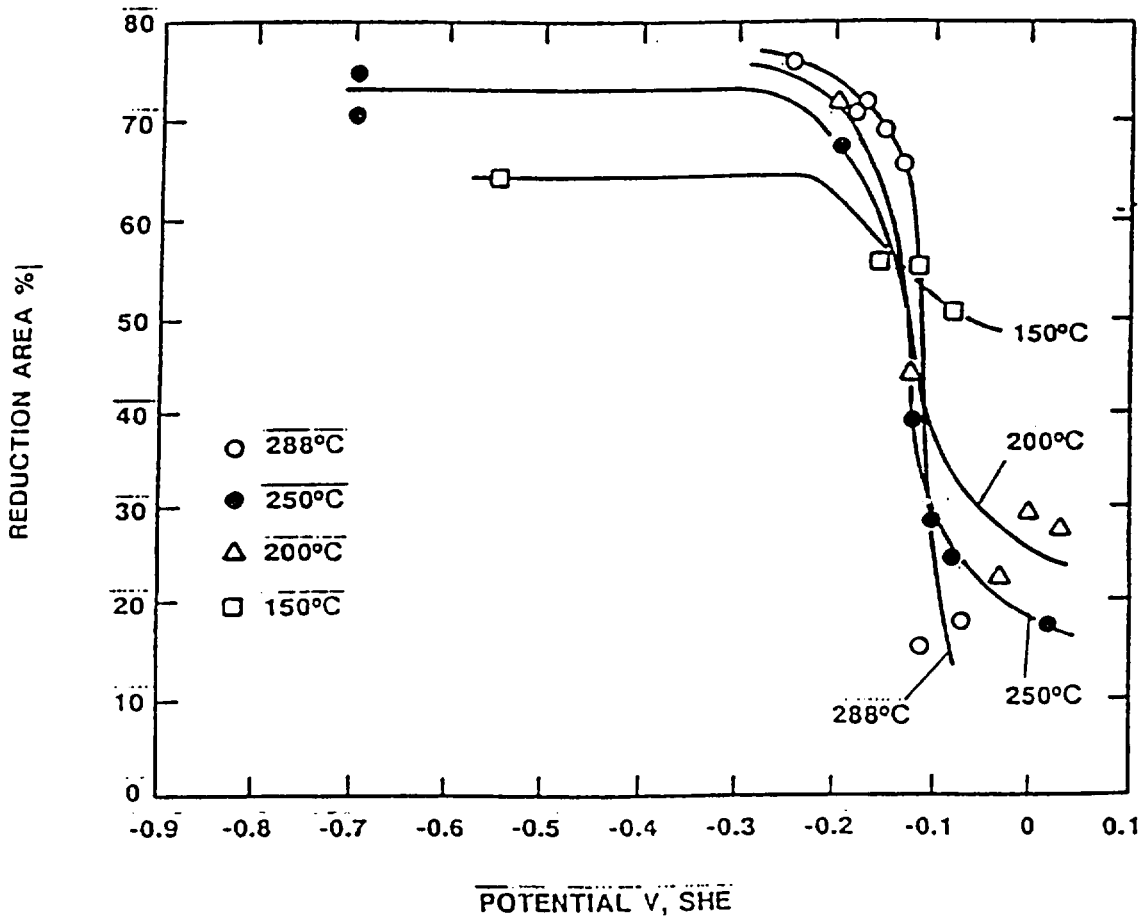

Figure 4. Effects of Potential Upon the Reduction in Area to Fracture at Various Temperatures in Slow Strain Rate Tests (Reference 25).

4.0 CONCLUSIONS/FINDINGS

This evaluation of corrosion of carbon and low alloy steels in the crevice of Alloy 600 nozzles repaired with a half nozzle repair technique or with a MNSA resulted in the following conclusions and findings. Due to the bounding nature of this evaluation, these results are very conservative.

1. The corrosion rate of the carbon or low alloy steel in the crevice of repaired nozzles that are bounding cases for small diameter Alloy 600 nozzles in CEOG plants [ ]. At this rate, the bounding case hot leg nozzle for CEOG plants has [ ]. The bounding case pressurizer nozzle, with one exception, has [ ]. The exception is [ ]. The bounding case pressurizer heater sleeves have [ ].

2. An alternate evaluation of the corrosion occurring in the crevice considered the effects of corrosion product buildup in the crevices of the bounding case nozzles. Corrosion products will occupy a greater volume than the metals from which they originate. As a result, the crevices will eventually become packed with dense corrosion products which will isolate the steel from the primary water environment. This will cause the corrosion process to be greatly reduced or eliminated after a period of time. [ ] increase in hole diameter as a result of corrosion will produce enough corrosion products to stifle the corrosion process.

3. Field experience with half-nozzle repairs and unclad surfaces in primary system applications indicates that the corrosion of the carbon and low alloy steels in nozzle crevices will not be significant.

4. Cracks that may be present in Alloy 600 remnants left in place following a half-nozzle repair or cracks that may initiate after completion of the repair will not propagate by SCC through the carbon or low alloy steel components. The reason is the low primary side oxygen levels that result in corrosion potentials below the critical cracking potentials for these materials.

5. Fatigue crack growth in carbon and low alloy steels could occur if stress corrosion cracks propagate through the Alloy 600 remnants and associated weld metals left in place after nozzle repairs. Conservative analyses indicate that the crack depths in the [ ] at the end of life versus a [ ]. The end-of-life flaw also meets the ASME criteria for emergency and faulted conditions. Similarly, the

most limiting hot leg nozzle is predicted to increase to depths of no more than [ ]. The maximum [ ]. These end-of-life flaws also satisfy ASME criteria for emergency and faulted conditions.

6. All available laboratory data and field experience indicate that nozzle repairs such as the half-nozzle repair are viable long term repair options for the small diameter Alloy 600 nozzles in CEOG plants.

5.0 REFERENCES

1. J. F. Hall, D. B. Scott, D. A. Wright and R. S. Pathania, "Cracking of Alloy 600 Heater Sleeves and Nozzles in PWR Pressurizers," Proceedings of the Fifth International Symposium on Environmental Degradation of Materials in Nuclear Power Systems-Water Reactors, ANS, 1992, pp. 652-660.

2. CEN 393-P, "Evaluation of Pressurizer Heater Sleeve Susceptibility to Primary Water Stress Corrosion Cracking," November 1989.

3. CE NPSD-649, "Information Package Inconel 600 Primary Pressure Boundary Penetrations CEOG Task 634," January 1991.

4. CE-NPSD-690-P, "Evaluation of Pressurizer Penetrations and Evaluation of Corrosion after Unidentified Leakage Develops, CEOG Task 700," January 1992.

5. CE-NPSD-648-P, "Corrosion and Erosion Testing of Pressurizer Shell Materials Exposed to Borated Water, CEOG Task 637," April 1991.

6. J. F. Hall, "Corrosion of Low Alloy Steel Fastener Materials Exposed to Borated Water," Proceedings of the Third International Symposium on Environmental Degradation of Materials in Nuclear Power Systems – Water Reactors, NACE, 1988, pp. 711-722.

7. J. F. Hall, J. P. Molkenthin and P. S. Prevey, "XRD Residual Stress Measurements on Alloy 600 Pressurizer Heater Sleeve Mockups," Proceedings of the Sixth International Symposium on Environmental Degradation of Materials in Nuclear Power Systems – Water Reactors, TMS, 1993, pp. 855-862.

8. J. F. Hall, R. S. Frisk, A. S. O'Neill, R. S. Pathania and W.B. Neff, "Boric Acid Corrosion of Carbon and Low Alloy Steels," Proceedings of the Fourth International Symposium on Environmental Degradation of Materials in Nuclear Power Systems – Water Reactors, NACE, 1990, pp. 9-38 – 9-52.

9. WCAP-7099, "Absorption of Corrosion Hydrogen by A302B Steel at 70°F to 500°F," December 1, 1967.

10. EPRI TR 104748, "Boric Acid Corrosion Handbook," April 1995.

11. EPRI TR-101108, "Boric Acid Corrosion Evaluation (BACE) Program Phase-1 Task-1 Report- Industry Experience Reference and Available Test Data Summary," December 1993.

12. A-CEOG-0440-1242 Rev 00, "Evaluation of the Corrosion Allowance for Reinforcement and Effective Weld to Support Small Alloy 600 Nozzle Repairs," June 13, 2000.

13. ASME Boiler and Pressure Vessel Code, Sections 3 and 11.

14. EPRI TR-103824-V1R1, "Steam Generator Reference Book, Revision 1, Volume 1," December 1994.

15. R. Scott Boggs and Kenneth R. Craig, "St. Lucie Unit 2 Pressurizer Nozzle Cracking Experience," Presented at the 1994 EPRI Workshop on PWSCC of Alloy 600 in PWR's, November 15-17, 1994.

16. A-GEN-PS-0003, Revision 00, "Evaluation of Fatigue Crack Growth Associated with Small Diameter Nozzles in CEOG Plants," May 10, 2000.

17. TR-MCC-201, "An Assessment of the Potential for Stress Corrosion Cracking of Light Water Reactor Pressure Vessels," March 1992.

18. F. P. Ford, P. L. Andresen, D. Weinstein, S. Ranganath and R. Pathania, "Stress Corrosion Cracking of Low-Alloy Steels in High Temperature Water," Proceedings of the Fifth International Symposium on Environmental Degradation of Materials in Nuclear Power Systems – Water Reactors, ANS, 1992, pp. 561-570.

19. W. H. Bamford, G. V. Rao, and J. L. Houtman, "Investigation of Service-Induced Degradation of Steam Generator Shell Materials," Proceedings of the Fifth International Symposium on Environmental Degradation of Materials in Nuclear Power Systems – Water Reactors, ANS, 1992, pp. 588-595.

20. T. A. Auten and S. Z. Hayden, "Fatigue Crack Growth Rate Studies of Medium Sulfur Low Alloy Steels in High Temperature Water," Proceedings of the Sixth International Symposium on Environmental Degradation of Materials in Nuclear Power Systems – Water Reactors, TMS, 1993, pp. 35-41.

21. T. A. Auten and J. V. Monter, "Temperature and Environmental Assisted Cracking in Low Alloy Steels," Proceedings of the Seventh International Symposium on Environmental Degradation of Materials in Nuclear Power Systems – Water Reactors, NACE, 1995, pp. 1145-1155.

22. P. M. Scott and D. R. Tice, "Stress Corrosion in Alloy Steels," Nuclear Engineering and Design, Vol.119, 1980, pp. 399-413.

23. H. Hanninen, P. Aaltonen, U. Ehrnsten, and E. Arilahti, "Stress Corrosion Cracking of Low Alloy Steel Weldments in LWR Water," Proceedings of the Sixth International Symposium on Environmental Degradation of Materials in Nuclear Power Systems – Water Reactors, TMS, 1993, pp. 43-51.

24. X. Zhou, J. Chen, E. A. Charles and J. Congleton, "Stress Corrosion Cracking of Iron Base Alloys in High Temperature Water," Proceedings of the Eighth International Symposium on Environmental Degradation of Materials in Nuclear Power Systems – Water Reactors, ANS, 1997, pp. 953-959.

25. J. Congleton, T. Shoji and R. N. Parkins, "The Stress Corrosion Cracking of Reactor Pressure Vessel Steel," Corrosion Science, Vol 25, No. 8/9, 1985, pp. 633-650.