ATTACHMENT C

WATERHAMMER LOADS

ATTACHMENT C

WATERHAMMER LOADS

INTRODUCTION

The following waterhammer conditions were considered in the Essential Service Water (ESW) System piping evaluations for Wolf Creek in Reference C-1.

- The GL 96-06 loading is a plant Faulted Condition that results from a simultaneous loss of offsite power (LOOP) and either a loss of coolant accident (LOCA) or main steam line break (MSLB). Two distinct – but not simultaneous – types of waterhammers result from the LOOP plus LOCA (or MSLB) event: condensation induced waterhammers (CIWH) followed by column closure waterhammers (CCWH). Each of these is considered a plant Faulted Condition.

METHOD OF LOAD DEVELOPMENT

The magnitude of the pressure pulses for the Wolf Creek ESW piping, in response to GL 96-06 transients, are developed in Ref. C-1. These are used as input to develop specific pipe segment loads for this structural analysis in this calculation. The resultant pressure pulses for both CCWH and CIWH transients are summarized as follows:

Train A Return Line CCWH: 225 psig

Train A Return Line CIWH: 179 psi

Train B Return Line CCWH: 205 psig

Train B Return Line CIWH: 179 psi

The development of the pressure pulse time for a CCWH transient is based on observation of measured data from LOOP testing at Wolf Creek. Attachment E in Ref. C-1 contains measured pressure-time profiles of CCWH events that occurred on 11/12/91 and 11/14/91 during the actuation sections of Wolf Creek procedure STS KJ-001B. These represent the column closure waterhammer event that can occur with a LOOP but <u>without</u> a LOCA or MSLB. Inspection of these data (e.g., see sheet E44 in Ref. C-1) shows that a realistic rise time for a CCWH event in this system is 100 ms and total peak duration is 200 ms.

The development of the pressure pulse time for a CIWH transient is discussed in Appendix G to Ref. C-1. Results are summarized as follows:

Train A (Ref. C-1) has a horizontal pipe length of 78.41 ft (Segments 1, 5, 6, and 7). Hence, the assumed length of the moving slug is 39.2 ft. With a sonic velocity of 2300 ft/s (Ref. C-1) this results in pressure pulse duration of 0.0341 seconds for Train A CIWH as noted below:

Duration = 39.2 x 2 / 2300 = 0.0341 seconds
Pulse rise time = 0.0341 / 2 = 0.0170 seconds

Train B (Ref. C-1) has a horizontal pipe length of 61.93 ft (Segment 11). Hence, the assumed length of the moving slug is 31.0 ft. With a sonic velocity of this results in a pressure pulse duration of 0.0270 seconds for Train B CIWH as noted below:

Duration = 31.0 x 2 / 2300 = 0.0270 seconds
Pulse rise time = 0.0270 = 0.0135 seconds

These pressure pulses travel through the subcooled water at sonic velocity, approximately 4135 ft/s (Ref. C-1, Appendix C). These pulses are tracked through the piping system using the PIPESMASH computer program (Ref. C-2). Positive unbalanced pipe segment forces are defined by using the global direction cosines at particular piping analysis nodes. The PIPESMASH output is written as time (seconds), force (lb), Node Point, and direction cosines (global). These values represent the waterhammer forcing functions for the fluid transient being evaluated.

The source documents discussed above include the following references:

C-1. Altran Technical Report No. 96227-TR-01, Rev. 4, "Containment Fan Cooler Response to a Simultaneous LOCA & LOOP Event," December, 2000.

C-2. PIPESMASH Version 1.0, "Waterhammer Forcing Function Generation Application," Altran Document No. 97115-UM-01, User Manual, Version 1.0

PIPESMASH INPUT DATA

PIPESMASH (Ref. C-2) input data for Wolf Creek ESW Train A and Train B return piping are contained in Tables C-1 through C-17. Figures C-1 and C-2 at the end of this attachment show the pipe segment identification for the data listed in these tables.

Train A Return Line CCWH:

Train A Return Line CCWH: CCWH-A (Table C-1)

Wave Speed	4135	Ft/sec
Rise Time	100	Ms
Duration	200	Ms
Peak Pressure Pulse: P	225	Psi

These parameters will be applied to the various flow paths from the closure location to both upstream and downstream sections as appropriate. Duplicate pipe segments are used when there are branch flow paths so that the actual time of the pressure pulse and the resultant transient forces reaching specific pipe segments is maintained.

CCWH-A PATH 1: 14" pipe from BP to Penetration P-73 (Table C-2)

Segment	Length (ft)	Size – Sch. (in.)	Area (in^2)	DCOS (global)			Node No.	Atten-uation	Notes
BP				X	Y	Z		Total	
7	18.44	14 Sch 30	137.90	0.707	0	0.707	1450	1.000	Start of impact
6	33.37	14 Sch 30	137.90	0	0	1	1320	1.000	
5	5.00	14 Sch 30	137.90	1	0	0	1270	1.000	
1	21.60	14 Sch 30	137.90	0	0	1	1160	1.000	Includes Segment 4
2	13.17	14 Sch 30	137.90	0	1	0	1060	1.000	
3	22.89	14 Sch 30	137.90	-0.761	0	0.649	1030	1.000	10' added to length for through containment

CCWH-A PATH 2: 14," 10," 8" pipe from BP to Ctmt. Cooler SGN01C (Table C-3)

Segment	Length (ft)	Size – Sch. (in.)	Area (in^2)	DCOS (global)			Node No.	Atten-uation	Notes
BP				X	Y	Z		Total	
8	40.08	14 Sch 30	137.90	0	-1	0	1530	1.000	Start of impact
9	14.85	14 Sch 30	137.90	-0.276	0	0.961	1690	1.000	
10	2.00	14 Sch 30	137.90	-0.276	0	0.961	1760	0.778	14x14x10 Tee
11	7.29	10 Sch 40	78.90	-0.276	0	0.961	1770	0.990	14x10 Reducer
12	10.80	10 Sch 40	78.90	1	0	0	1820	0.990	
13	5.30	8 Sch 40	50.00	1	0	0	1940	0.940	10x8x6 Tee/Reducer
14	6.00	8 Sch 40	50.00	0	-1	0	1990	0.940	
15	18.63	8 Sch 40	50.00	0	0	1	2050	0.940	
16	3.94	8 Sch 40	50.00	-1	0	0	2120	0.940	
17	4.31	8 Sch 40	50.00	0	-1	0	2150	0.940	

CCWH-A PATH 3: 14," 10," 6" pipe, BP to 55-HBC-14 to Ctmt. Cooler SGN01A (Table C-4)

Segment BP	Length (ft)	Size – Sch. (in.)	Area (in^2)	DCOS (global) X	Y	Z	Node No.	Atten-uation Total	Notes
8	40.08	14 Sch 30	137.90	0	-1	0	1530	1.000	Start of impact
9	14.85	14 Sch 30	137.90	-0.276	0	0.961	1690	1.000	
18	9.60	10 Sch 40	78.90	1	0	0	2560	0.778	14x14x10 Tee
19	6.08	10 Sch 40	78.90	0	-1	0	2600	0.778	
20	9.00	10 Sch 40	78.90	0	0	-1	2650	0.778	
21	14.92	6 Sch 40	28.90	0	0	-1	2710	0.778	10x8x6 Tee
22	2.00	6 Sch 40	28.90	-0.707	-0.707	0	2810	0.778	
23	2.79	6 Sch 40	28.90	0	-1	0	2840	0.778	

CCWH-A PATH 4: 14," 10," 8" pipe, BP to 51-HBC-10 to Ctmt. Cooler SGN01A (Table C-5)

Segment BP	Length (ft)	Size – Sch. (in.)	Area (in^2)	DCOS (global) X	Y	Z	Node No.	Atten-uation Total	Notes
8	40.08	14 Sch 30	137.90	0	-1	0	1530	1.000	Start of impact
9	14.85	14 Sch 30	137.90	-0.276	0	0.961	1690	1.000	
18	9.60	10 Sch 40	78.90	1	0	0	2560	0.778	14x14x10 Tee
19	6.08	10 Sch 40	78.90	0	-1	0	2600	0.778	
20	9.00	10 Sch 40	78.90	0	0	-1	2650	0.778	
24	1.08	8 Sch 40	50.00	-0.707	-0.707	0	3010	0.778	10x8x6 Tee
25	3.46	8 Sch 40	50.00	0	-1	0	3030	0.778	

CCWH-A PATH 5: 14," 10," 8," 6" pipe, BP to 51-HCB-10 Ctmt. Cooler SGN01C (Table C-6)

Segment BP	Length (ft)	Size – Sch. (in.)	Area (in^2)	DCOS (global) X	Y	Z	Node No.	Atten-uation Total	Notes
8	40.08	14 Sch 30	137.90	0	-1	0	1530	1.000	Start of impact
9	14.85	14 Sch 30	137.90	-0.276	0	0.961	1690	1.000	
10	2.00	14 Sch 30	137.90	-0.276	0	0.961	1760	0.778	14x14x10 Tee
11	7.29	10 Sch 40	78.90	-0.276	0	0.961	1770	0.990	14x10 Reducer
12	10.80	10 Sch 40	78.90	1	0	0	1820	0.990	
26	1.12	6 Sch 40	28.90	0	0	1	4000	0.768	10x10x6 Tee/Reducer
27	10.31	6 Sch 40	28.90	0	-1	0	4030	0.768	

Train A Return Line CIWH:

Train A Return Line CIWH: CIWH-A (Table C-7)

Wave Speed	4135	Ft/sec
Rise Time	17.0	Ms
Duration	34.1	Ms
Peak Pressure Pulse: P	179	Psi

CIWH-A PATH 1: 14" pipe from BP to Penetration P-73 (Table C-8)

Segment BP	Length (ft)	Size – Sch. (in.)	Area (in^2)	DCOS (global) X	Y	Z	Node No.	Atten-uation Total	Notes
6	16.69	14 Sch 30	137.90	0	0	1	1320	1.000	Start of impact (mid-point of Segment 6)
5	5.00	14 Sch 30	137.90	1	0	0	1270	1.000	
1	21.60	14 Sch 30	137.90	0	0	1	1160	1.000	Includes Segment 4
2	13.17	14 Sch 30	137.90	0	1	0	1060	1.000	
3	22.89	14 Sch 30	137.90	-0.761	0	0.649	1030	1.000	10' added to length for through containment

Train B Return Line CCWH:

Train B Return Line CCWH: CCWH-B (Table C-9)

Wave Speed	4135	Ft/sec
Rise Time	100	Ms
Duration	200	Ms
Peak Pressure Pulse: P	205	Psi

CCWH-B PATH 1: 10," 14" pipe from BP to Penetration P-29 (Table C-10)

Segment BP	Length (ft)	Size – Sch. (in.)	Area (in^2)	DCOS (global) X	Y	Z	Node No.	Atten-uation Total	Notes
11	61.10	10 Sch 40	78.90	0.707	0	0.707	130	1.000	Start of impact
12	4.50	10 Sch 40	78.90	0	1	0	113	1.000	
13	41.15	10 Sch 40	78.90	0	0	1	95	1.000	
14	2.50	10 Sch 40	78.90	0	1	0	80	1.000	
15	14.26	10 Sch 40	78.90	-1	0	0	70	1.000	
16	25.83	10 Sch 40	78.90	0	0	1	50	1.000	
17	4.04	10 Sch 40	78.90	-0.707	0	0.707	39	1.000	
18	4.00	14 Sch 30	137.90	0	1	0	32	0.728	10x14 Reducer
29	11.00	14 Sch 30	137.90	0	1	0	27	0.566	14x14x10 Tee
30	18.96	14 Sch 30	137.90	0.695	0	0.719	12	0.566	10' added to length for through containment

CCWH-B PATH 2: 14," 10," 6" pipe, BP to 56-HBC-14 to Ctmt. Cooler SGN01D (Table C-11)

Segment BP	Length (ft)	Size – Sch. (in.)	Area (in^2)	DCOS (global) X	Y	Z	Node No.	Atten-uation Total	Notes
11	61.10	10 Sch 40	78.90	0.707	0	0.707	130	1.000	Start of impact
12	4.50	10 Sch 40	78.90	0	1	0	113	1.000	
13	41.15	10 Sch 40	78.90	0	0	1	95	1.000	
14	2.50	10 Sch 40	78.90	0	1	0	80	1.000	
15	14.26	10 Sch 40	78.90	-1	0	0	70	1.000	
16	25.83	10 Sch 40	78.90	0	0	1	50	1.000	
17	4.04	10 Sch 40	78.90	-0.707	0	0.707	39	1.000	
18	4.00	14 Sch 30	137.90	0	1	0	32	0.728	10x14 Reducer
28	4.04	10 Sch 40	78.90	-0.707	0	-0.707	297	0.566	14x14x10 Tee
27	23.37	10 Sch 40	78.90	-1	0	0	310	0.566	
26	47.00	10 Sch 40	78.90	0	-1	0	350	0.566	
25	10.00	10 Sch 40	78.90	0	0	1	391	0.566	
24	11.71	10 Sch 40	78.90	-1	0	0	403	0.566	
21	15.92	6 Sch 40	28.89	-1	0	0	412	0.566	10x8x6 Tee/Reducer
20	3.68	6 Sch 40	28.89	0	0	1	415	0.566	
19	3.56	6 Sch 40	28.89	0	-1	0	427	0.566	

Note 1

CCWH-B PATH 3: 14," 10," 8" pipe, BP to 54-HBC-10 to Ctmt. Cooler SGN01D (Table C-12)

Segment BP	Length (ft)	Size – Sch. (in.)	Area (in^2)	DCOS (global) – (later) X	Y	Z	Node (later)	Atten-uation Total	Notes
11	61.93	10 Sch 40	78.90	0.707	0	0.707	130	1.000	Start of impact
12	4.50	10 Sch 40	78.90	0	1	0	113	1.000	
13	41.15	10 Sch 40	78.90	0	0	1	95	1.000	
14	2.50	10 Sch 40	78.90	0	1	0	80	1.000	
15	14.26	10 Sch 40	78.90	-1	0	0	70	1.000	
16	25.83	10 Sch 40	78.90	0	0	1	50	1.000	
17	4.04	10 Sch 40	78.90	-0.707	0	0.707	39	1.000	
18	4.00	14 Sch 30	137.90	0	1	0	32	0.728	10x14 Reducer
28	4.04	10 Sch 40	78.90	-0.707	0	-0.707	297	0.566	14x14x10 Tee
27	23.37	10 Sch 40	78.90	-1	0	0	310	0.566	
26	47.00	10 Sch 40	78.90	0	-1	0	350	0.566	
25	10.00	10 Sch 40	78.90	0	0	1	391	0.566	
24	11.71	10 Sch 40	78.90	-1	0	0	403	0.566	
23	3.04	8 Sch 40	50.00	0	0	1	440	0.566	10x8x6 Tee/Reducer
22	3.56	8 Sch 40	50.00	0	-1	0	447	0.566	

Note 1

Note 1: These pipe segments should use attenuation = 1.0 because column closure from "D" cooler occurs here.

CCWH-B PATH 4: 10," 8" pipe from BP to Ctmt. Cooler SGN01B (Table C-13)

Segment BP	Length (ft)	Size – Sch. (in.)	Area (in^2)	DCOS (global) X	Y	Z	Node No.	Atten-uation Total	Notes
10	36.00	10 Sch 40	78.90	0	-1	0	205	1.000	Start of impact
9	10.60	10 Sch 40	78.90	0	0	1	216	1.000	
8	12.04	10 Sch 40	78.90	-1	0	0	225	1.000	
4	15.92	8 Sch 40	50.00	-1	0	0	243	1.000	10x8x6 Tee/Reducer
3	2.00	8 Sch 40	50.00	0	-1	0	250	1.000	
2	4.54	8 Sch 40	50.00	0	0	-1	253	1.000	
1	3.56	8 Sch 40	50.00	0	-1	0	257	1.000	

CCWH-B PATH 5: 10," 6" pipe, BP to 52-HCB-10 to Ctmt. Cooler SGN01B (Table C-14)

Segment BP	Length (ft)	Size – Sch. (in.)	Area (in^2)	DCOS (global) X	Y	Z	Node No.	Atten-uation Total	Notes
10	36.00	10 Sch 40	78.90	0	-1	0	205	1.000	Start of impact
9	10.60	10 Sch 40	78.90	0	0	1	216	1.000	
8	12.04	10 Sch 40	78.90	-1	0	0	225	1.000	
7	2.00	6 Sch 40	28.90	0	-1	0	265	1.000	10x8x6 Tee/Reducer
6	5.18	6 Sch 40	28.90	0	0	-1	268	1.000	
5	3.56	6 Sch 40	28.90	0	-1	0	272	1.000	

Train B Return Line CIWH:

Train B Return Line CIWH: CIWH-B (Table C-15)

Wave Speed	4135	Ft/sec
Rise Time	13.5	Ms
Duration	27.0	Ms
Peak Pressure Pulse: P	179	Psi

CIWH-B PATH 1: 10," 14" pipe from BP to Penetration P-29 (Table C-16)

Segment BP	Length (ft)	Size – Sch. (in.)	Area (in^2)	DCOS (global) X	Y	Z	Node No.	Atten-uation Total	Notes
11	31.00	10 Sch 40	78.90	0.707	0	0.707	130	1.000	Start of impact (mid-point of Segment 11)
12	4.50	10 Sch 40	78.90	0	1	0	113	1.000	
13	41.15	10 Sch 40	78.90	0	0	1	95	1.000	
14	2.50	10 Sch 40	78.90	0	1	0	80	1.000	
15	14.26	10 Sch 40	78.90	-1	0	0	70	1.000	
16	25.83	10 Sch 40	78.90	0	0	1	50	1.000	
17	4.04	10 Sch 40	78.90	-0.707	0	0.707	39	1.000	
18	4.00	14 Sch 30	137.90	0	1	0	32	0.728	10x14 Reducer
29	11.00	14 Sch 30	137.90	0	1	0	27	0.566	14x14x10 Tee
30	18.96	14 Sch 30	137.90	0.695	0	0.719	12	0.566	10' added to length for through containment

CIWH-B PATH 2: 14," 10," 6" pipe, BP to 56-HBC-14 to Ctmt. Cooler SGN01D (Table C-17)

Segment BP	Length (ft)	Size – Sch. (in.)	Area (in^2)	DCOS (global) X	Y	Z	Node No.	Atten-uation Total	Notes
11	31.00	10 Sch 40	78.90	0.707	0	0.707	130	1.000	Start of impact (mid-point of Segment 11)
12	4.50	10 Sch 40	78.90	0	1	0	113	1.000	
13	41.15	10 Sch 40	78.90	0	0	1	95	1.000	
14	2.50	10 Sch 40	78.90	0	1	0	80	1.000	
15	14.26	10 Sch 40	78.90	-1	0	0	70	1.000	
16	25.83	10 Sch 40	78.90	0	0	1	50	1.000	
17	4.04	10 Sch 40	78.90	-0.707	0	0.707	39	1.000	
18	4.00	14 Sch 30	137.90	0	1	0	32	0.728	10x14 Reducer
28	4.04	10 Sch 40	78.90	-0.707	0	-0.707	297	0.566	14x14x10 Tee
27	23.37	10 Sch 40	78.90	-1	0	0	310	0.566	

RESULTING WATERHAMMER LOADS

Train A Return Line Column Closure Waterhammer Loads – CCWH-A:

Results of the PIPESMASH development of pipe segment forcing functions are presented in Table C-18 for CCWH-A (pages C10-C15). These forces should be applied at the nodes indicated with the direction cosines (global) given.

Train A Return Line Condensation Induced Waterhammer Loads – CIWH-A:

Results of the PIPESMASH development of pipe segment forcing functions are presented in Table C-19 for CIWH-A (pages C16-C17). These forces should be applied at the nodes indicated with the direction cosines (global) given.

Train B Return Line Column Closure Waterhammer Loads – CCWH-B:

Results of the PIPESMASH development of pipe segment forcing functions are presented in Table C-20 for CCWH-B (pages C18-C24). These forces should be applied at the nodes indicated with the direction cosines (global) given.

Train B Return Line Condensation Induced Waterhammer Loads – CIWH-B:

Results of the PIPESMASH development of pipe segment forcing functions are presented in Table C-21 for CIWH-B (pages C25-C27). These forces should be applied at the nodes indicated with the direction cosines (global) given.

Sketches for Train A and Train B showing the pipe segment numbers are included in Figures C-1 and C-2, pages C28 and C29, respectively.

Table C-18. Train A Return Line Column Closure Waterhammer Loads – CCWH-A

```
    WaterHammer Type: Column Closure
-----------------------------------------------------------------
                          INPUT SECTION
-----------------------------------------------------------------
Input Obtained From File: 96227-tr-003, Rev. 1, Att C-1996.doc

INPUT - PARAMETERS
    Train A Return Line CCWH: CCWH-A (Table C-1)
        Wave Speed       : 4135  ft/sec
        Rise Time        : 100  ms
        Duration         : 200  ms
        Pressure Pulse   : 225  psi

INPUT - PATH(S)

Segment  Length   Size    Area   Direction COS(global)   Node  Att.
Number    (ft)    Sch.   (in^2)     X        Y       Z

    CCWH-A PATH 1: 14" pipe from BP to Penetration P-73 (Table C-2)
7        18.44  14 Sch 30   137.9 0.707   0.000  0.707   1450   1
6        33.37  14 Sch 30   137.9 0.000   0.000  1.000   1320   1
5        5      14 Sch 30   137.9 1.000   0.000  0.000   1270   1
1        21.6   14 Sch 30   137.9 0.000   0.000  1.000   1160   1
2        13.17  14 Sch 30   137.9 0.000   1.000  0.000   1060   1
3        22.89  14 Sch 30   137.9 -0.761  0.000  0.649   1030   1

    CCWH-A PATH 2: 14," 10," 8" pipe from BP to Ctmt. Cooler SGN01C (Table C-3)
8        40.08  14 Sch 30   137.9 0.000   -1.000 0.000   1530   1
9        14.85  14 Sch 30   137.9 -0.276  0.000  0.961   1690   1
10       2      14 Sch 30   137.9 -0.276  0.000  0.961   1760   0.778
11       7.29   10 Sch 40   78.9  -0.276  0.000  0.961   1770   0.99
12       10.8   10 Sch 40   78.9  1.000   0.000  0.000   1820   0.99
13       5.3    8 Sch 40    50    1.000   0.000  0.000   1940   0.94
14       6      8 Sch 40    50    0.000   -1.000 0.000   1990   0.94
15       18.63  8 Sch 40    50    0.000   0.000  1.000   2050   0.94
16       3.94   8 Sch 40    50    -1.000  0.000  0.000   2120   0.94
17       4.31   8 Sch 40    50    0.000   -1.000 0.000   2150   0.94

    CCWH-A PATH 3: 14," 10," 6" pipe, BP to 55-HBC-14 to Ctmt. Cooler SGN01A
(Table C-4)
8        40.08  14 Sch 30   137.9 0.000   -1.000 0.000   1530   1
9        14.85  14 Sch 30   137.9 -0.276  0.000  0.961   1690   1
18       9.6    10 Sch 40   78.9  1.000   0.000  0.000   2560   0.778
19       6.08   10 Sch 40   78.9  0.000   -1.000 0.000   2600   0.778
20       9      10 Sch 40   78.9  0.000   0.000  -1.000  2650   0.778
21       14.92  6 Sch 40    28.9  0.000   0.000  -1.000  2710   0.778
22       2      6 Sch 40    28.9  -0.707  -0.707 0.000   2810   0.778
23       2.79   6 Sch 40    28.9  0.000   -1.000 0.000   2840   0.778
```

CCWH-A PATH 4: 14," 10," 8" pipe, BP to 51-HBC-10 to Ctmt. Cooler SGN01A (Table C-5)

8	40.08	14 Sch 30	137.9	0.000	-1.000	0.000	1530	1
9	14.85	14 Sch 30	137.9	-0.276	0.000	0.961	1690	1
18	9.6	10 Sch 40	78.9	1.000	0.000	0.000	2560	0.778
19	6.08	10 Sch 40	78.9	0.000	-1.000	0.000	2600	0.778
20	9	10 Sch 40	78.9	0.000	0.000	-1.000	2650	0.778
24	1.08	8 Sch 40	50	-0.707	-0.707	0.000	3010	0.778
25	3.46	8 Sch 40	50	0.000	-1.000	0.000	3030	0.778

CCWH-A PATH 5: 14," 10," 8," 6" pipe, BP to 51-HCB-10 Ctmt. Cooler SGN01C (Table C-6)

8	40.08	14 Sch 30	137.9	0.000	-1.000	0.000	1530	1
9	14.85	14 Sch 30	137.9	-0.276	0.000	0.961	1690	1
10	2	14 Sch 30	137.9	-0.276	0.000	0.961	1760	0.778
11	7.29	10 Sch 40	78.9	-0.276	0.000	0.961	1770	0.99
12	10.8	10 Sch 40	78.9	1.000	0.000	0.000	1820	0
26	1.12	6 Sch 40	28.9	0.000	0.000	1.000	4000	0.768
27	10.31	6 Sch 40	28.9	0.000	-1.000	0.000	4030	0.768

By: [illegible] Date: 12/21/00

Chk: [illegible] Date: 12-22-00

PIPESMASH OUTPUT - WATERHAMMER FORCING FUNCTIONS

Output Written to File: D:\CCWH-A3.txt

Time (sec)	Force (lb)	Node Point	Direction Cosine (global) DCOS X	DCOS Y	DCOS Z
0.0000	0.0	1450	0.707	0.000	0.707
0.0000	0.0	1450	0.707	0.000	0.707
0.0045	1383.7	1450	0.707	0.000	0.707
0.1000	1383.7	1450	0.707	0.000	0.707
0.1045	-1383.7	1450	0.707	0.000	0.707
0.2000	-1383.7	1450	0.707	0.000	0.707
0.2045	0.0	1450	0.707	0.000	0.707
0.2277	0.0	1450	0.707	0.000	0.707
0.0000	0.0	1320	0.000	0.000	1.000
0.0045	0.0	1320	0.000	0.000	1.000
0.0125	2504.0	1320	0.000	0.000	1.000
0.1045	2504.0	1320	0.000	0.000	1.000
0.1125	-2504.0	1320	0.000	0.000	1.000
0.2045	-2504.0	1320	0.000	0.000	1.000
0.2125	0.0	1320	0.000	0.000	1.000
0.2277	0.0	1320	0.000	0.000	1.000
0.0000	0.0	1270	1.000	0.000	0.000
0.0125	0.0	1270	1.000	0.000	0.000
0.0137	375.2	1270	1.000	0.000	0.000
0.1125	375.2	1270	1.000	0.000	0.000
0.1137	-375.2	1270	1.000	0.000	0.000
0.2125	-375.2	1270	1.000	0.000	0.000
0.2137	0.0	1270	1.000	0.000	0.000
0.2277	0.0	1270	1.000	0.000	0.000

0.0000	0.0	1160	0.000	0.000	1.000
0.0137	0.0	1160	0.000	0.000	1.000
0.0190	1620.8	1160	0.000	0.000	1.000
0.1137	1620.8	1160	0.000	0.000	1.000
0.1190	-1620.8	1160	0.000	0.000	1.000
0.2137	-1620.8	1160	0.000	0.000	1.000
0.2190	0.0	1160	0.000	0.000	1.000
0.2277	0.0	1160	0.000	0.000	1.000
0.0000	0.0	1060	0.000	1.000	0.000
0.0190	0.0	1060	0.000	1.000	0.000
0.0221	988.2	1060	0.000	1.000	0.000
0.1190	988.2	1060	0.000	1.000	0.000
0.1221	-988.2	1060	0.000	1.000	0.000
0.2190	-988.2	1060	0.000	1.000	0.000
0.2221	0.0	1060	0.000	1.000	0.000
0.2277	0.0	1060	0.000	1.000	0.000
0.0000	0.0	1030	-0.761	0.000	0.649
0.0221	0.0	1030	-0.761	0.000	0.649
0.0277	1717.6	1030	-0.761	0.000	0.649
0.1221	1717.6	1030	-0.761	0.000	0.649
0.1277	-1717.6	1030	-0.761	0.000	0.649
0.2221	-1717.6	1030	-0.761	0.000	0.649
0.2277	0.0	1030	-0.761	0.000	0.649
0.2277	0.0	1030	-0.761	0.000	0.649
0.0000	0.0	1530	0.000	-1.000	0.000
0.0000	0.0	1530	0.000	-1.000	0.000
0.0097	3007.5	1530	0.000	-1.000	0.000
0.1000	3007.5	1530	0.000	-1.000	0.000
0.1097	-3007.5	1530	0.000	-1.000	0.000
0.2000	-3007.5	1530	0.000	-1.000	0.000
0.2097	0.0	1530	0.000	-1.000	0.000
0.2277	0.0	1530	0.000	-1.000	0.000
0.0000	0.0	1690	-0.276	0.000	0.961
0.0097	0.0	1690	-0.276	0.000	0.961
0.0133	1114.3	1690	-0.276	0.000	0.961
0.1097	1114.3	1690	-0.276	0.000	0.961
0.1133	-1114.3	1690	-0.276	0.000	0.961
0.2097	-1114.3	1690	-0.276	0.000	0.961
0.2133	0.0	1690	-0.276	0.000	0.961
0.2277	0.0	1690	-0.276	0.000	0.961
0.0000	0.0	1760	-0.276	0.000	0.961
0.0133	0.0	1760	-0.276	0.000	0.961
0.0138	116.8	1760	-0.276	0.000	0.961
0.1133	116.8	1760	-0.276	0.000	0.961
0.1138	-116.8	1760	-0.276	0.000	0.961
0.2133	-116.8	1760	-0.276	0.000	0.961
0.2138	0.0	1760	-0.276	0.000	0.961
0.2277	0.0	1760	-0.276	0.000	0.961
0.0000	0.0	1770	-0.276	0.000	0.961
0.0138	0.0	1770	-0.276	0.000	0.961
0.0155	309.8	1770	-0.276	0.000	0.961
0.1138	309.8	1770	-0.276	0.000	0.961
0.1155	-309.8	1770	-0.276	0.000	0.961
0.2138	-309.8	1770	-0.276	0.000	0.961
0.2155	0.0	1770	-0.276	0.000	0.961

0.2277	0.0	1770	-0.276	0.000	0.961
0.0000	0.0	1820	1.000	0.000	0.000
0.0155	0.0	1820	1.000	0.000	0.000
0.0181	459.0	1820	1.000	0.000	0.000
0.1155	459.0	1820	1.000	0.000	0.000
0.1181	-459.0	1820	1.000	0.000	0.000
0.2155	-459.0	1820	1.000	0.000	0.000
0.2181	0.0	1820	1.000	0.000	0.000
0.2277	0.0	1820	1.000	0.000	0.000
0.0000	0.0	1940	1.000	0.000	0.000
0.0181	0.0	1940	1.000	0.000	0.000
0.0194	135.5	1940	1.000	0.000	0.000
0.1181	135.5	1940	1.000	0.000	0.000
0.1194	-135.5	1940	1.000	0.000	0.000
0.2181	-135.5	1940	1.000	0.000	0.000
0.2194	0.0	1940	1.000	0.000	0.000
0.2277	0.0	1940	1.000	0.000	0.000
0.0000	0.0	1990	0.000	-1.000	0.000
0.0194	0.0	1990	0.000	-1.000	0.000
0.0209	153.4	1990	0.000	-1.000	0.000
0.1194	153.4	1990	0.000	-1.000	0.000
0.1209	-153.4	1990	0.000	-1.000	0.000
0.2194	-153.4	1990	0.000	-1.000	0.000
0.2209	0.0	1990	0.000	-1.000	0.000
0.2277	0.0	1990	0.000	-1.000	0.000
0.0000	0.0	2050	0.000	0.000	1.000
0.0209	0.0	2050	0.000	0.000	1.000
0.0254	476.5	2050	0.000	0.000	1.000
0.1209	476.5	2050	0.000	0.000	1.000
0.1254	-476.5	2050	0.000	0.000	1.000
0.2209	-476.5	2050	0.000	0.000	1.000
0.2254	0.0	2050	0.000	0.000	1.000
0.2277	0.0	2050	0.000	0.000	1.000
0.0000	0.0	2120	-1.000	0.000	0.000
0.0254	0.0	2120	-1.000	0.000	0.000
0.0263	100.8	2120	-1.000	0.000	0.000
0.1254	100.8	2120	-1.000	0.000	0.000
0.1263	-100.8	2120	-1.000	0.000	0.000
0.2254	-100.8	2120	-1.000	0.000	0.000
0.2263	0.0	2120	-1.000	0.000	0.000
0.2277	0.0	2120	-1.000	0.000	0.000
0.0000	0.0	2150	0.000	-1.000	0.000
0.0263	0.0	2150	0.000	-1.000	0.000
0.0274	110.2	2150	0.000	-1.000	0.000
0.1263	110.2	2150	0.000	-1.000	0.000
0.1274	-110.2	2150	0.000	-1.000	0.000
0.2263	-110.2	2150	0.000	-1.000	0.000
0.2274	0.0	2150	0.000	-1.000	0.000
0.2277	0.0	2150	0.000	-1.000	0.000
0.0000	0.0	2560	1.000	0.000	0.000
0.0133	0.0	2560	1.000	0.000	0.000
0.0156	320.7	2560	1.000	0.000	0.000
0.1133	320.7	2560	1.000	0.000	0.000
0.1156	-320.7	2560	1.000	0.000	0.000
0.2133	-320.7	2560	1.000	0.000	0.000

0.2156	0.0	2560	1.000	0.000	0.000
0.2277	0.0	2560	1.000	0.000	0.000
0.0000	0.0	2600	0.000	-1.000	0.000
0.0156	0.0	2600	0.000	-1.000	0.000
0.0171	203.1	2600	0.000	-1.000	0.000
0.1156	203.1	2600	0.000	-1.000	0.000
0.1171	-203.1	2600	0.000	-1.000	0.000
0.2156	-203.1	2600	0.000	-1.000	0.000
0.2171	0.0	2600	0.000	-1.000	0.000
0.2277	0.0	2600	0.000	-1.000	0.000
0.0000	0.0	2650	0.000	0.000	-1.000
0.0171	0.0	2650	0.000	0.000	-1.000
0.0193	300.6	2650	0.000	0.000	-1.000
0.1171	300.6	2650	0.000	0.000	-1.000
0.1193	-300.6	2650	0.000	0.000	-1.000
0.2171	-300.6	2650	0.000	0.000	-1.000
0.2193	0.0	2650	0.000	0.000	-1.000
0.2277	0.0	2650	0.000	0.000	-1.000
0.0000	0.0	2710	0.000	0.000	-1.000
0.0193	0.0	2710	0.000	0.000	-1.000
0.0229	182.5	2710	0.000	0.000	-1.000
0.1193	182.5	2710	0.000	0.000	-1.000
0.1229	-182.5	2710	0.000	0.000	-1.000
0.2193	-182.5	2710	0.000	0.000	-1.000
0.2229	0.0	2710	0.000	0.000	-1.000
0.2277	0.0	2710	0.000	0.000	-1.000
0.0000	0.0	2810	-0.707	-0.707	0.000
0.0229	0.0	2810	-0.707	-0.707	0.000
0.0233	24.5	2810	-0.707	-0.707	0.000
0.1229	24.5	2810	-0.707	-0.707	0.000
0.1233	-24.5	2810	-0.707	-0.707	0.000
0.2229	-24.5	2810	-0.707	-0.707	0.000
0.2233	0.0	2810	-0.707	-0.707	0.000
0.2277	0.0	2810	-0.707	-0.707	0.000
0.0000	0.0	2840	0.000	-1.000	0.000
0.0233	0.0	2840	0.000	-1.000	0.000
0.0240	34.1	2840	0.000	-1.000	0.000
0.1233	34.1	2840	0.000	-1.000	0.000
0.1240	-34.1	2840	0.000	-1.000	0.000
0.2233	-34.1	2840	0.000	-1.000	0.000
0.2240	0.0	2840	0.000	-1.000	0.000
0.2277	0.0	2840	0.000	-1.000	0.000
0.0000	0.0	3010	-0.707	-0.707	0.000
0.0193	0.0	3010	-0.707	-0.707	0.000
0.0195	22.9	3010	-0.707	-0.707	0.000
0.1193	22.9	3010	-0.707	-0.707	0.000
0.1195	-22.9	3010	-0.707	-0.707	0.000
0.2193	-22.9	3010	-0.707	-0.707	0.000
0.2195	0.0	3010	-0.707	-0.707	0.000
0.2277	0.0	3010	-0.707	-0.707	0.000
0.0000	0.0	3030	0.000	-1.000	0.000
0.0195	0.0	3030	0.000	-1.000	0.000
0.0204	73.2	3030	0.000	-1.000	0.000
0.1195	73.2	3030	0.000	-1.000	0.000
0.1204	-73.2	3030	0.000	-1.000	0.000

0.2195	-73.2	3030	0.000	-1.000	0.000
0.2204	0.0	3030	0.000	-1.000	0.000
0.2277	0.0	3030	0.000	-1.000	0.000
0.0000	0.0	4000	0.000	0.000	1.000
0.0181	0.0	4000	0.000	0.000	1.000
0.0184	13.5	4000	0.000	0.000	1.000
0.1181	13.5	4000	0.000	0.000	1.000
0.1184	-13.5	4000	0.000	0.000	1.000
0.2181	-13.5	4000	0.000	0.000	1.000
0.2184	0.0	4000	0.000	0.000	1.000
0.2277	0.0	4000	0.000	0.000	1.000
0.0000	0.0	4030	0.000	-1.000	0.000
0.0184	0.0	4030	0.000	-1.000	0.000
0.0209	124.5	4030	0.000	-1.000	0.000
0.1184	124.5	4030	0.000	-1.000	0.000
0.1209	-124.5	4030	0.000	-1.000	0.000
0.2184	-124.5	4030	0.000	-1.000	0.000
0.2209	0.0	4030	0.000	-1.000	0.000
0.2277	0.0	4030	0.000	-1.000	0.000

Table C-19. Train A Return Line Condensation Induced Waterhammer Loads – CIWH-A

WaterHammer Type: Condensation Induced

INPUT SECTION

Input Obtained From File: 96227-tr-003, Rev. 1, Att C-1996.doc

INPUT - PARAMETERS

Train A Return Line CIWH: CIWH-A (Table C-7)

Wave Speed : 4135 ft/sec
Rise Time : 17 ms
Duration : 34.1 ms
Pressure Pulse : 179 psi

INPUT - PATH

Segment Number	Length (ft)	Size Sch.	Area (in^2)	Direction COS(global) X	Y	Z	Node	Att.
CIWH-A PATH 1: 14" pipe from BP to Penetration P-73 (Table C-8)								
6	16.69	14 Sch 30	137.9	0.000	0.000	1.000	1320	1
5	5	14 Sch 30	137.9	1.000	0.000	0.000	1270	1
1	21.6	14 Sch 30	137.9	0.000	0.000	1.000	1160	1
2	13.17	14 Sch 30	137.9	0.000	1.000	0.000	1060	1
3	22.89	14 Sch 30*	137.9	-0.761	0.000	0.649	1030	1

By: DaVanDwyne Date: 12/21/00

Chk: J Harper Date: 12-22-00

* Pipe segment should have used flow area for a 14" sch 40 (A=135.5 in²) pipe. Loads are conservative. DEJ 12/21/00

PIPESMASH OUTPUT - WATERHAMMER FORCING FUNCTIONS

Output Written to File: D:\CIWH-A3.txt

Time (sec)	Force (lb)	Node Point	Direction Cosine (global) DCOS X	DCOS Y	DCOS Z
0.0000	0.0	1320	0.000	0.000	1.000
0.0000	0.0	1320	0.000	0.000	1.000
0.0040	5860.7	1320	0.000	0.000	1.000
0.0170	5860.7	1320	0.000	0.000	1.000
0.0210	-5860.7	1320	0.000	0.000	1.000
0.0341	-5860.7	1320	0.000	0.000	1.000
0.0381	0.0	1320	0.000	0.000	1.000
0.0533	0.0	1320	0.000	0.000	1.000
0.0000	0.0	1270	1.000	0.000	0.000
0.0040	0.0	1270	1.000	0.000	0.000
0.0052	1755.8	1270	1.000	0.000	0.000
0.0210	1755.8	1270	1.000	0.000	0.000
0.0222	-1755.8	1270	1.000	0.000	0.000
0.0381	-1755.8	1270	1.000	0.000	0.000
0.0393	0.0	1270	1.000	0.000	0.000

0.0533	0.0	1270	1.000	0.000	0.000
0.0000	0.0	1160	0.000	0.000	1.000
0.0052	0.0	1160	0.000	0.000	1.000
0.0105	7584.8	1160	0.000	0.000	1.000
0.0222	7584.8	1160	0.000	0.000	1.000
0.0275	-7584.8	1160	0.000	0.000	1.000
0.0393	-7584.8	1160	0.000	0.000	1.000
0.0446	0.0	1160	0.000	0.000	1.000
0.0533	0.0	1160	0.000	0.000	1.000
0.0000	0.0	1060	0.000	1.000	0.000
0.0105	0.0	1060	0.000	1.000	0.000
0.0137	4624.6	1060	0.000	1.000	0.000
0.0275	4624.6	1060	0.000	1.000	0.000
0.0307	-4624.6	1060	0.000	1.000	0.000
0.0446	-4624.6	1060	0.000	1.000	0.000
0.0478	0.0	1060	0.000	1.000	0.000
0.0533	0.0	1060	0.000	1.000	0.000
0.0000	0.0	1030	-0.761	0.000	0.649
0.0137	0.0	1030	-0.761	0.000	0.649
0.0192	8037.8	1030	-0.761	0.000	0.649
0.0307	8037.8	1030	-0.761	0.000	0.649
0.0362	-8037.8	1030	-0.761	0.000	0.649
0.0478	-8037.8	1030	-0.761	0.000	0.649
0.0533	0.0	1030	-0.761	0.000	0.649
0.0533	0.0	1030	-0.761	0.000	0.649

Table C-20. Train B Return Line Column Closure Waterhammer Loads – CCWH-B

WaterHammer Type: Column Closure

INPUT SECTION

Input Obtained From File: 96227-tr-003, Rev. 1, Att C-1996.doc

INPUT - PARAMETERS

Train B Return Line CCWH: CCWH-B (Table C-9)

Wave Speed : 4135 ft/sec
Rise Time : 100 ms
Duration : 200 ms
Pressure Pulse : 205 psi

INPUT - PATH(S)

Segment Number	Length (ft)	Size Sch.	Area (in^2)	Direction COS(global) X	Y	Z	Node	Att.
CCWH-B PATH 1: 10," 14" pipe from BP to Penetration P-29 (Table C-10)								
11	61.1	10 Sch 40	78.9	0.707	0.000	0.707	130	1
12	4.5	10 Sch 40	78.9	0.000	1.000	0.000	113	1
13	41.15	10 Sch 40	78.9	0.000	0.000	1.000	95	1
14	2.5	10 Sch 40	78.9	0.000	1.000	0.000	80	1
15	14.26	10 Sch 40	78.9	-1.000	0.000	0.000	70	1
16	25.83	10 Sch 40	78.9	0.000	0.000	1.000	50	1
17	4.04	10 Sch 40	78.9	-0.707	0.000	0.707	39	1
18	4	14 Sch 30	137.9	0.000	1.000	0.000	32	0.728
29	11	14 Sch 30	137.9	0.000	1.000	0.000	27	0.566
30	18.96	14 Sch 30*	137.9	0.695	0.000	0.719	12	0.566

* Pipe segment should have used flow area for a 14" sch 40 (At = 135.5 in²) pipe. Loads are conservative. DEB 12/21/00

CCWH-B PATH 2: 14," 10," 6" pipe, BP to 56-HBC-14 to Ctmt. Cooler SGN01D (Table C-11)

11	61.1	10 Sch 40	78.9	0.707	0.000	0.707	130	1
12	4.5	10 Sch 40	78.9	0.000	1.000	0.000	113	1
13	41.15	10 Sch 40	78.9	0.000	0.000	1.000	95	1
14	2.5	10 Sch 40	78.9	0.000	1.000	0.000	80	1
15	14.26	10 Sch 40	78.9	-1.000	0.000	0.000	70	1
16	25.83	10 Sch 40	78.9	0.000	0.000	1.000	50	1
17	4.04	10 Sch 40	78.9	-0.707	0.000	0.707	39	1
18	4	14 Sch 30	137.9	0.000	1.000	0.000	32	0.728
28	4.04	10 Sch 40	78.9	-0.707	0.000	-0.707	297	~~0.566~~
27	23.37	10 Sch 40	78.9	-1.000	0.000	0.000	310	~~0.566~~
26	47	10 Sch 40	78.9	0.000	-1.000	0.000	350	~~0.566~~
25	10	10 Sch 40	78.9	0.000	0.000	1.000	391	~~0.566~~ 1.0
24	11.71	10 Sch 40	78.9	-1.000	0.000	0.000	403	~~0.566~~ Note 1
21	15.92	6 Sch 40	28.89	-1.000	0.000	0.000	412	~~0.566~~
20	3.68	6 Sch 40	28.89	0.000	0.000	1.000	415	~~0.566~~
19	3.56	6 Sch 40	28.89	0.000	-1.000	0.000	427	~~0.566~~

Note 1: These pipe segments should use attenuation = 1.0 because column closure from "D" cooler occurs here.

CCWH-B PATH 3: 14," 10," 8" pipe, BP to 54-HBC-10 to Ctmt. Cooler SGN01D (Table C-12)

11	61.93	10 Sch 40	78.9	0.707	0.000	0.707	130	1
12	4.5	10 Sch 40	78.9	0.000	1.000	0.000	113	1
13	41.15	10 Sch 40	78.9	0.000	0.000	1.000	95	1
14	2.5	10 Sch 40	78.9	0.000	1.000	0.000	80	1
15	14.26	10 Sch 40	78.9	-1.000	0.000	0.000	70	1
16	25.83	10 Sch 40	78.9	0.000	0.000	1.000	50	1
17	4.04	10 Sch 40	78.9	-0.707	0.000	0.707	39	1
18	4	14 Sch 30	137.9	0.000	1.000	0.000	32	0.728
28	4.04	10 Sch 40	78.9	-0.707	0.000	-0.707	297	~~0.566~~
27	23.37	10 Sch 40	78.9	-1.000	0.000	0.000	310	~~0.566~~
26	47	10 Sch 40	78.9	0.000	-1.000	0.000	350	~~0.566~~
25	10	10 Sch 40	78.9	0.000	0.000	1.000	391	~~0.566~~ 1.0
24	11.71	10 Sch 40	78.9	-1.000	0.000	0.000	403	~~0.566~~
23	3.04	8 Sch 40	50	0.000	0.000	1.000	440	~~0.566~~
22	3.56	8 Sch 40	50	0.000	-1.000	0.000	447	~~0.566~~

NOTE 1

CCWH-B PATH 4: 10," 8" pipe from BP to Ctmt. Cooler SGN01B (Table C-13)

10	36	10 Sch 40	78.9	0.000	-1.000	0.000	205	1
9	10.6	10 Sch 40	78.9	0.000	0.000	1.000	216	1
8	12.04	10 Sch 40	78.9	-1.000	0.000	0.000	225	1
4	15.92	8 Sch 40	50	-1.000	0.000	0.000	243	1
3	2	8 Sch 40	50	0.000	-1.000	0.000	250	1
2	4.54	8 Sch 40	50	0.000	0.000	-1.000	253	1
1	3.56	8 Sch 40	50	0.000	-1.000	0.000	257	1

CCWH-B PATH 5: 10," 6" pipe, BP to 52-HCB-10 to Ctmt. Cooler SGN01B (Table C-14)

10	36	10 Sch 40	78.9	0.000	-1.000	0.000	205	1
9	10.6	10 Sch 40	78.9	0.000	0.000	1.000	216	1
8	12.04	10 Sch 40	78.9	-1.000	0.000	0.000	225	1
7	2	6 Sch 40	28.9	0.000	-1.000	0.000	265	1
6	5.18	6 Sch 40	28.9	0.000	0.000	-1.000	268	1
5	3.56	6 Sch 40	28.9	0.000	-1.000	0.000	272	1

By: DAVanDeuyne Date: 12/21/00

Chk: JBFerguson Date: 12-22-00

PIPESMASH OUTPUT - WATERHAMMER FORCING FUNCTIONS

Output Written to File: D:\CCWH-B3.txt

Time (sec)	Force (lb)	Node Point	Direction Cosine (global) DCOS X	DCOS Y	DCOS Z
0.0000	0.0	130	0.707	0.000	0.707
0.0000	0.0	130	0.707	0.000	0.707
0.0148	2390.0	130	0.707	0.000	0.707
0.1000	2390.0	130	0.707	0.000	0.707
0.1148	-2390.0	130	0.707	0.000	0.707
0.2000	-2390.0	130	0.707	0.000	0.707
0.2148	0.0	130	0.707	0.000	0.707
0.2669	0.0	130	0.707	0.000	0.707

Note 1: These pipe segments should use attenuation = 1.0 because column closure from "B" cooler occurs here

0.0000	0.0	113	0.000	1.000	0.000
0.0148	0.0	113	0.000	1.000	0.000
0.0159	176.0	113	0.000	1.000	0.000
0.1148	176.0	113	0.000	1.000	0.000
0.1159	-176.0	113	0.000	1.000	0.000
0.2148	-176.0	113	0.000	1.000	0.000
0.2159	0.0	113	0.000	1.000	0.000
0.2669	0.0	113	0.000	1.000	0.000
0.0000	0.0	95	0.000	0.000	1.000
0.0159	0.0	95	0.000	0.000	1.000
0.0258	1609.6	95	0.000	0.000	1.000
0.1159	1609.6	95	0.000	0.000	1.000
0.1258	-1609.6	95	0.000	0.000	1.000
0.2159	-1609.6	95	0.000	0.000	1.000
0.2258	0.0	95	0.000	0.000	1.000
0.2669	0.0	95	0.000	0.000	1.000
0.0000	0.0	80	0.000	1.000	0.000
0.0258	0.0	80	0.000	1.000	0.000
0.0264	97.8	80	0.000	1.000	0.000
0.1258	97.8	80	0.000	1.000	0.000
0.1264	-97.8	80	0.000	1.000	0.000
0.2258	-97.8	80	0.000	1.000	0.000
0.2264	0.0	80	0.000	1.000	0.000
0.2669	0.0	80	0.000	1.000	0.000
0.0000	0.0	70	-1.000	0.000	0.000
0.0264	0.0	70	-1.000	0.000	0.000
0.0299	557.8	70	-1.000	0.000	0.000
0.1264	557.8	70	-1.000	0.000	0.000
0.1299	-557.8	70	-1.000	0.000	0.000
0.2264	-557.8	70	-1.000	0.000	0.000
0.2299	0.0	70	-1.000	0.000	0.000
0.2669	0.0	70	-1.000	0.000	0.000
0.0000	0.0	50	0.000	0.000	1.000
0.0299	0.0	50	0.000	0.000	1.000
0.0361	1010.4	50	0.000	0.000	1.000
0.1299	1010.4	50	0.000	0.000	1.000
0.1361	-1010.4	50	0.000	0.000	1.000
0.2299	-1010.4	50	0.000	0.000	1.000
0.2361	0.0	50	0.000	0.000	1.000
0.2669	0.0	50	0.000	0.000	1.000
0.0000	0.0	39	-0.707	0.000	0.707
0.0361	0.0	39	-0.707	0.000	0.707
0.0371	158.0	39	-0.707	0.000	0.707
0.1361	158.0	39	-0.707	0.000	0.707
0.1371	-158.0	39	-0.707	0.000	0.707
0.2361	-158.0	39	-0.707	0.000	0.707
0.2371	0.0	39	-0.707	0.000	0.707
0.2669	0.0	39	-0.707	0.000	0.707
0.0000	0.0	32	0.000	1.000	0.000
0.0371	0.0	32	0.000	1.000	0.000
0.0381	199.1	32	0.000	1.000	0.000
0.1371	199.1	32	0.000	1.000	0.000
0.1381	-199.1	32	0.000	1.000	0.000
0.2371	-199.1	32	0.000	1.000	0.000
0.2381	0.0	32	0.000	1.000	0.000

0.2669	0.0	32	0.000	1.000	0.000
0.0000	0.0	27	0.000	1.000	0.000
0.0381	0.0	27	0.000	1.000	0.000
0.0407	425.6	27	0.000	1.000	0.000
0.1381	425.6	27	0.000	1.000	0.000
0.1407	-425.6	27	0.000	1.000	0.000
0.2381	-425.6	27	0.000	1.000	0.000
0.2407	0.0	27	0.000	1.000	0.000
0.2669	0.0	27	0.000	1.000	0.000
0.0000	0.0	12	0.695	0.000	0.719
0.0407	0.0	12	0.695	0.000	0.719
0.0453	733.7	12	0.695	0.000	0.719
0.1407	733.7	12	0.695	0.000	0.719
0.1453	-733.7	12	0.695	0.000	0.719
0.2407	-733.7	12	0.695	0.000	0.719
0.2453	0.0	12	0.695	0.000	0.719
0.2669	0.0	12	0.695	0.000	0.719
0.0000	0.0	297	-0.707	0.000	-0.707
0.0381	0.0	297	-0.707	0.000	-0.707
0.0390	89.4	297	-0.707	0.000	-0.707
0.1381	89.4	297	-0.707	0.000	-0.707
0.1390	-89.4	297	-0.707	0.000	-0.707
0.2381	-89.4	297	-0.707	0.000	-0.707
0.2390	0.0	297	-0.707	0.000	-0.707
0.2669	0.0	297	-0.707	0.000	-0.707
0.0000	0.0	310	-1.000	0.000	0.000
0.0390	0.0	310	-1.000	0.000	0.000
0.0447	517.4	310	-1.000	0.000	0.000
0.1390	517.4	310	-1.000	0.000	0.000
0.1447	-517.4	310	-1.000	0.000	0.000
0.2390	-517.4	310	-1.000	0.000	0.000
0.2447	0.0	310	-1.000	0.000	0.000
0.2669	0.0	310	-1.000	0.000	0.000
0.0000	0.0	350	0.000	-1.000	0.000
0.0447	0.0	350	0.000	-1.000	0.000
0.0561	1040.6	350	0.000	-1.000	0.000
0.1447	1040.6	350	0.000	-1.000	0.000
0.1561	-1040.6	350	0.000	-1.000	0.000
0.2447	-1040.6	350	0.000	-1.000	0.000
0.2561	0.0	350	0.000	-1.000	0.000
0.2669	0.0	350	0.000	-1.000	0.000
0.0000	0.0	391	0.000	0.000	1.000
0.0561	0.0	391	0.000	0.000	1.000
0.0585	221.4	391	0.000	0.000	1.000
0.1561	221.4	391	0.000	0.000	1.000
0.1585	-221.4	391	0.000	0.000	1.000
0.2561	-221.4	391	0.000	0.000	1.000
0.2585	0.0	391	0.000	0.000	1.000
0.2669	0.0	391	0.000	0.000	1.000
0.0000	0.0	403	-1.000	0.000	0.000
0.0585	0.0	403	-1.000	0.000	0.000
0.0613	259.3	403	-1.000	0.000	0.000
0.1585	259.3	403	-1.000	0.000	0.000
0.1613	-259.3	403	-1.000	0.000	0.000
0.2585	-259.3	403	-1.000	0.000	0.000

0.2613	0.0	403	-1.000	0.000	0.000
0.2669	0.0	403	-1.000	0.000	0.000
0.0000	0.0	412	-1.000	0.000	0.000
0.0613	0.0	412	-1.000	0.000	0.000
0.0652	129.1	412	-1.000	0.000	0.000
0.1613	129.1	412	-1.000	0.000	0.000
0.1652	-129.1	412	-1.000	0.000	0.000
0.2613	-129.1	412	-1.000	0.000	0.000
0.2652	0.0	412	-1.000	0.000	0.000
0.2669	0.0	412	-1.000	0.000	0.000
0.0000	0.0	415	0.000	0.000	1.000
0.0652	0.0	415	0.000	0.000	1.000
0.0660	29.8	415	0.000	0.000	1.000
0.1652	29.8	415	0.000	0.000	1.000
0.1660	-29.8	415	0.000	0.000	1.000
0.2652	-29.8	415	0.000	0.000	1.000
0.2660	0.0	415	0.000	0.000	1.000
0.2669	0.0	415	0.000	0.000	1.000
0.0000	0.0	427	0.000	-1.000	0.000
0.0660	0.0	427	0.000	-1.000	0.000
0.0669	28.9	427	0.000	-1.000	0.000
0.1660	28.9	427	0.000	-1.000	0.000
0.1669	-28.9	427	0.000	-1.000	0.000
0.2660	-28.9	427	0.000	-1.000	0.000
0.2669	0.0	427	0.000	-1.000	0.000
0.2669	0.0	427	0.000	-1.000	0.000
0.0000	0.0	440	0.000	0.000	1.000
0.0615	0.0	440	0.000	0.000	1.000
0.0622	42.7	440	0.000	0.000	1.000
0.1615	42.7	440	0.000	0.000	1.000
0.1622	-42.7	440	0.000	0.000	1.000
0.2615	-42.7	440	0.000	0.000	1.000
0.2622	0.0	440	0.000	0.000	1.000
0.2669	0.0	440	0.000	0.000	1.000
0.0000	0.0	447	0.000	-1.000	0.000
0.0622	0.0	447	0.000	-1.000	0.000
0.0631	49.9	447	0.000	-1.000	0.000
0.1622	49.9	447	0.000	-1.000	0.000
0.1631	-49.9	447	0.000	-1.000	0.000
0.2622	-49.9	447	0.000	-1.000	0.000
0.2631	0.0	447	0.000	-1.000	0.000
0.2669	0.0	447	0.000	-1.000	0.000
0.0000	0.0	205	0.000	-1.000	0.000
0.0000	0.0	205	0.000	-1.000	0.000
0.0087	1408.2	205	0.000	-1.000	0.000
0.1000	1408.2	205	0.000	-1.000	0.000
0.1087	-1408.2	205	0.000	-1.000	0.000
0.2000	-1408.2	205	0.000	-1.000	0.000
0.2087	0.0	205	0.000	-1.000	0.000
0.2669	0.0	205	0.000	-1.000	0.000
0.0000	0.0	216	0.000	0.000	1.000
0.0087	0.0	216	0.000	0.000	1.000
0.0113	414.6	216	0.000	0.000	1.000
0.1087	414.6	216	0.000	0.000	1.000
0.1113	-414.6	216	0.000	0.000	1.000

0.2087	-414.6	216	0.000	0.000	1.000
0.2113	0.0	216	0.000	0.000	1.000
0.2669	0.0	216	0.000	0.000	1.000
0.0000	0.0	225	-1.000	0.000	0.000
0.0113	0.0	225	-1.000	0.000	0.000
0.0142	471.0	225	-1.000	0.000	0.000
0.1113	471.0	225	-1.000	0.000	0.000
0.1142	-471.0	225	-1.000	0.000	0.000
0.2113	-471.0	225	-1.000	0.000	0.000
0.2142	0.0	225	-1.000	0.000	0.000
0.2669	0.0	225	-1.000	0.000	0.000
0.0000	0.0	243	-1.000	0.000	0.000
0.0142	0.0	243	-1.000	0.000	0.000
0.0180	394.6	243	-1.000	0.000	0.000
0.1142	394.6	243	-1.000	0.000	0.000
0.1180	-394.6	243	-1.000	0.000	0.000
0.2142	-394.6	243	-1.000	0.000	0.000
0.2180	0.0	243	-1.000	0.000	0.000
0.2669	0.0	243	-1.000	0.000	0.000
0.0000	0.0	250	0.000	-1.000	0.000
0.0180	0.0	250	0.000	-1.000	0.000
0.0185	49.6	250	0.000	-1.000	0.000
0.1180	49.6	250	0.000	-1.000	0.000
0.1185	-49.6	250	0.000	-1.000	0.000
0.2180	-49.6	250	0.000	-1.000	0.000
0.2185	0.0	250	0.000	-1.000	0.000
0.2669	0.0	250	0.000	-1.000	0.000
0.0000	0.0	253	0.000	0.000	-1.000
0.0185	0.0	253	0.000	0.000	-1.000
0.0196	112.5	253	0.000	0.000	-1.000
0.1185	112.5	253	0.000	0.000	-1.000
0.1196	-112.5	253	0.000	0.000	-1.000
0.2185	-112.5	253	0.000	0.000	-1.000
0.2196	0.0	253	0.000	0.000	-1.000
0.2669	0.0	253	0.000	0.000	-1.000
0.0000	0.0	257	0.000	-1.000	0.000
0.0196	0.0	257	0.000	-1.000	0.000
0.0205	88.2	257	0.000	-1.000	0.000
0.1196	88.2	257	0.000	-1.000	0.000
0.1205	-88.2	257	0.000	-1.000	0.000
0.2196	-88.2	257	0.000	-1.000	0.000
0.2205	0.0	257	0.000	-1.000	0.000
0.2669	0.0	257	0.000	-1.000	0.000
0.0000	0.0	265	0.000	-1.000	0.000
0.0142	0.0	265	0.000	-1.000	0.000
0.0147	28.7	265	0.000	-1.000	0.000
0.1142	28.7	265	0.000	-1.000	0.000
0.1147	-28.7	265	0.000	-1.000	0.000
0.2142	-28.7	265	0.000	-1.000	0.000
0.2147	0.0	265	0.000	-1.000	0.000
0.2669	0.0	265	0.000	-1.000	0.000
0.0000	0.0	268	0.000	0.000	-1.000
0.0147	0.0	268	0.000	0.000	-1.000
0.0159	74.2	268	0.000	0.000	-1.000
0.1147	74.2	268	0.000	0.000	-1.000

0.1159	-74.2	268	0.000	0.000	-1.000
0.2147	-74.2	268	0.000	0.000	-1.000
0.2159	0.0	268	0.000	0.000	-1.000
0.2669	0.0	268	0.000	0.000	-1.000
0.0000	0.0	272	0.000	-1.000	0.000
0.0159	0.0	272	0.000	-1.000	0.000
0.0168	51.0	272	0.000	-1.000	0.000
0.1159	51.0	272	0.000	-1.000	0.000
0.1168	-51.0	272	0.000	-1.000	0.000
0.2159	-51.0	272	0.000	-1.000	0.000
0.2168	0.0	272	0.000	-1.000	0.000
0.2669	0.0	272	0.000	-1.000	0.000

Table C-21. Train B Return Line Condensation Induced Waterhammer Loads – CIWH-B

WaterHammer Type: Condensation Induced

INPUT SECTION

Input Obtained From File: 96227-tr-003, Rev. 1, Att C-1996.doc

INPUT - PARAMETERS

Train B Return Line CIWH: CIWH-B (Table C-15)

Wave Speed : 4135 ft/sec
Rise Time : 13.5 ms
Duration : 27 ms
Pressure Pulse : 179 psi

INPUT - PATH

Segment Number	Length (ft)	Size Sch.	Area (in^2)	Direction COS(global) X	Y	Z	Node	Att.
Peak Pressure Pulse: P□179□Psi□□CIWH-B PATH 1: 10," 14" pipe from BP to Penetration P-29 (Table C-16)								
11	31	10 Sch 40	78.9	0.707	0.000	0.707	130	1
12	4.5	10 Sch 40	78.9	0.000	1.000	0.000	113	1
13	41.15	10 Sch 40	78.9	0.000	0.000	1.000	95	1
14	2.5	10 Sch 40	78.9	0.000	1.000	0.000	80	1
15	14.26	10 Sch 40	78.9	-1.000	0.000	0.000	70	1
16	25.83	10 Sch 40	78.9	0.000	0.000	1.000	50	1
17	4.04	10 Sch 40	78.9	-0.707	0.000	0.707	39	1
18	4	14 Sch 30	137.9	0.000	1.000	0.000	32	0.728
29	11	14 Sch 30	137.9	0.000	1.000	0.000	27	0.566
30	18.96	14 Sch 30	137.9	0.695	0.000	0.719	12	0.566
IWH-B PATH 2: 14," 10," 6" pipe, BP to 56-HBC-14 to Ctmt. Cooler SGN01D (Table C-17)								
11	31	10 Sch 40	78.9	0.707	0.000	0.707	130	1
12	4.5	10 Sch 40	78.9	0.000	1.000	0.000	113	1
13	41.15	10 Sch 40	78.9	0.000	0.000	1.000	95	1
14	2.5	10 Sch 40	78.9	0.000	1.000	0.000	80	1
15	14.26	10 Sch 40	78.9	-1.000	0.000	0.000	70	1
16	25.83	10 Sch 40	78.9	0.000	0.000	1.000	50	1
17	4.04	10 Sch 40	78.9	-0.707	0.000	0.707	39	1
18	4	14 Sch 30	137.9	0.000	1.000	0.000	32	0.728
28	4.04	10 Sch 40	78.9	-0.707	0.000	-0.707	297	0.566
27	23.37	10 Sch 40	78.9	-1.000	0.000	0.000	310	0.566

By: D Van Dayne Date: 12/21/00

Chk: L B Fagan Date: 12-22-00

PIPESMASH OUTPUT - WATERHAMMER FORCING FUNCTIONS

Output Written to File: D:\CIWH-B3.txt

Time (sec)	Force (lb)	Node Point	Direction Cosine (global) DCOS X	DCOS Y	DCOS Z
0.0000	0.0	130	0.707	0.000	0.707
0.0000	0.0	130	0.707	0.000	0.707
0.0075	7843.0	130	0.707	0.000	0.707
0.0135	7843.0	130	0.707	0.000	0.707
0.0210	-7843.0	130	0.707	0.000	0.707
0.0270	-7843.0	130	0.707	0.000	0.707
0.0345	0.0	130	0.707	0.000	0.707
0.0650	0.0	130	0.707	0.000	0.707
0.0000	0.0	113	0.000	1.000	0.000
0.0075	0.0	113	0.000	1.000	0.000
0.0086	1138.5	113	0.000	1.000	0.000
0.0210	1138.5	113	0.000	1.000	0.000
0.0221	-1138.5	113	0.000	1.000	0.000
0.0345	-1138.5	113	0.000	1.000	0.000
0.0356	0.0	113	0.000	1.000	0.000
0.0650	0.0	113	0.000	1.000	0.000
0.0000	0.0	95	0.000	0.000	1.000
0.0086	0.0	95	0.000	0.000	1.000
0.0185	10411.0	95	0.000	0.000	1.000
0.0221	10411.0	95	0.000	0.000	1.000
0.0320	-10411.0	95	0.000	0.000	1.000
0.0356	-10411.0	95	0.000	0.000	1.000
0.0455	0.0	95	0.000	0.000	1.000
0.0650	0.0	95	0.000	0.000	1.000
0.0000	0.0	80	0.000	1.000	0.000
0.0185	0.0	80	0.000	1.000	0.000
0.0191	632.5	80	0.000	1.000	0.000
0.0320	632.5	80	0.000	1.000	0.000
0.0326	-632.5	80	0.000	1.000	0.000
0.0455	-632.5	80	0.000	1.000	0.000
0.0461	0.0	80	0.000	1.000	0.000
0.0650	0.0	80	0.000	1.000	0.000
0.0000	0.0	70	-1.000	0.000	0.000
0.0191	0.0	70	-1.000	0.000	0.000
0.0226	3607.8	70	-1.000	0.000	0.000
0.0326	3607.8	70	-1.000	0.000	0.000
0.0361	-3607.8	70	-1.000	0.000	0.000
0.0461	-3607.8	70	-1.000	0.000	0.000
0.0496	0.0	70	-1.000	0.000	0.000
0.0650	0.0	70	-1.000	0.000	0.000
0.0000	0.0	50	0.000	0.000	1.000
0.0226	0.0	50	0.000	0.000	1.000
0.0288	6535.0	50	0.000	0.000	1.000
0.0361	6535.0	50	0.000	0.000	1.000
0.0423	-6535.0	50	0.000	0.000	1.000
0.0496	-6535.0	50	0.000	0.000	1.000
0.0558	0.0	50	0.000	0.000	1.000
0.0650	0.0	50	0.000	0.000	1.000

0.0000	0.0	39	-0.707	0.000	0.707
0.0288	0.0	39	-0.707	0.000	0.707
0.0298	1022.1	39	-0.707	0.000	0.707
0.0423	1022.1	39	-0.707	0.000	0.707
0.0433	-1022.1	39	-0.707	0.000	0.707
0.0558	-1022.1	39	-0.707	0.000	0.707
0.0568	0.0	39	-0.707	0.000	0.707
0.0650	0.0	39	-0.707	0.000	0.707
0.0000	0.0	32	0.000	1.000	0.000
0.0298	0.0	32	0.000	1.000	0.000
0.0308	1287.7	32	0.000	1.000	0.000
0.0433	1287.7	32	0.000	1.000	0.000
0.0443	-1287.7	32	0.000	1.000	0.000
0.0568	-1287.7	32	0.000	1.000	0.000
0.0578	0.0	32	0.000	1.000	0.000
0.0650	0.0	32	0.000	1.000	0.000
0.0000	0.0	27	0.000	1.000	0.000
0.0308	0.0	27	0.000	1.000	0.000
0.0334	2753.1	27	0.000	1.000	0.000
0.0443	2753.1	27	0.000	1.000	0.000
0.0469	-2753.1	27	0.000	1.000	0.000
0.0578	-2753.1	27	0.000	1.000	0.000
0.0604	0.0	27	0.000	1.000	0.000
0.0650	0.0	27	0.000	1.000	0.000
0.0000	0.0	12	0.695	0.000	0.719
0.0334	0.0	12	0.695	0.000	0.719
0.0380	4745.3	12	0.695	0.000	0.719
0.0469	4745.3	12	0.695	0.000	0.719
0.0515	-4745.3	12	0.695	0.000	0.719
0.0604	-4745.3	12	0.695	0.000	0.719
0.0650	0.0	12	0.695	0.000	0.719
0.0650	0.0	12	0.695	0.000	0.719
0.0000	0.0	297	-0.707	0.000	-0.707
0.0308	0.0	297	-0.707	0.000	-0.707
0.0318	578.5	297	-0.707	0.000	-0.707
0.0443	578.5	297	-0.707	0.000	-0.707
0.0453	-578.5	297	-0.707	0.000	-0.707
0.0578	-578.5	297	-0.707	0.000	-0.707
0.0588	0.0	297	-0.707	0.000	-0.707
0.0650	0.0	297	-0.707	0.000	-0.707
0.0000	0.0	310	-1.000	0.000	0.000
0.0318	0.0	310	-1.000	0.000	0.000
0.0374	3346.5	310	-1.000	0.000	0.000
0.0453	3346.5	310	-1.000	0.000	0.000
0.0509	-3346.5	310	-1.000	0.000	0.000
0.0588	-3346.5	310	-1.000	0.000	0.000
0.0644	0.0	310	-1.000	0.000	0.000
0.0650	0.0	310	-1.000	0.000	0.000

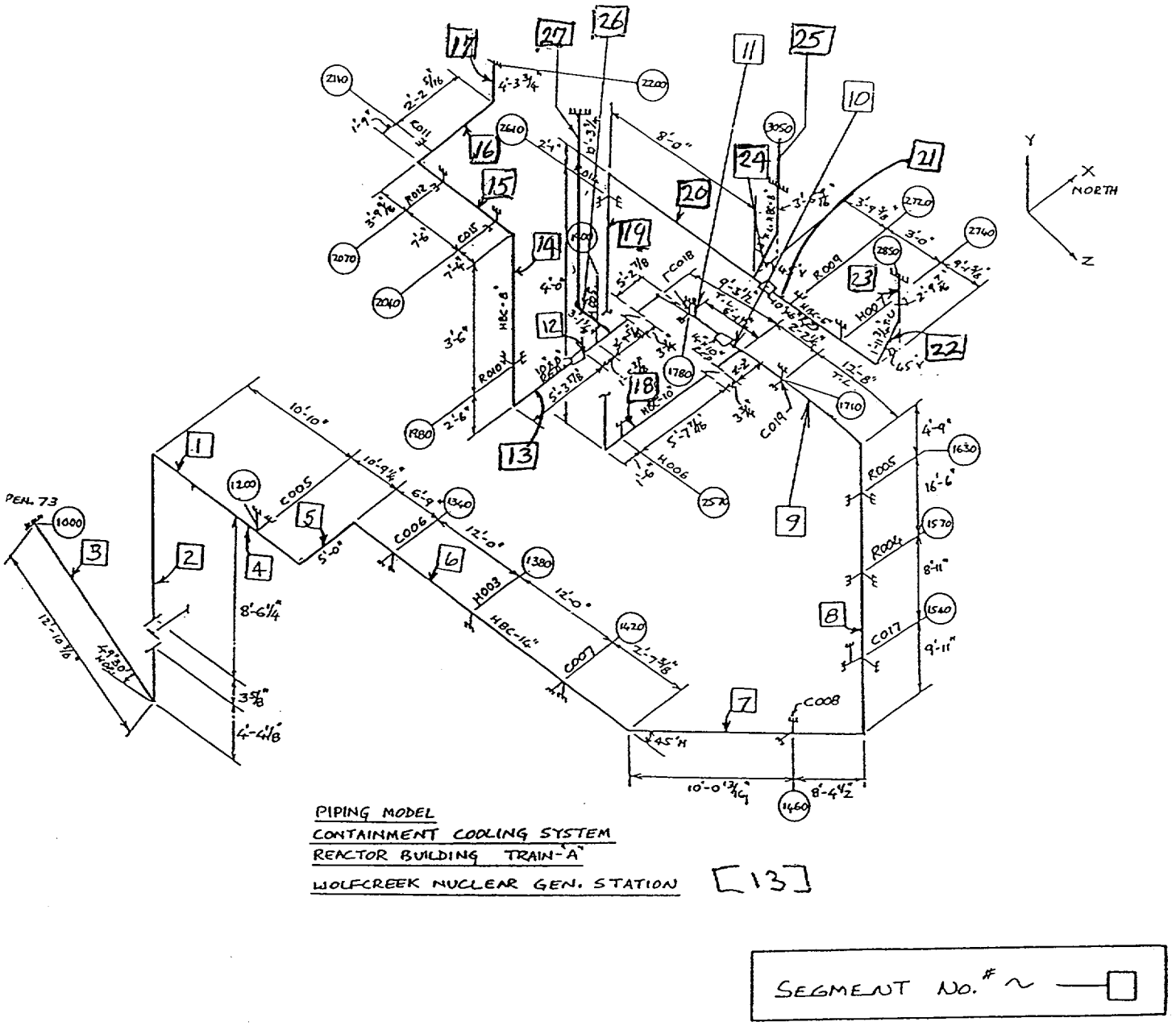

Figure C-1. Pipe Segment Identification for Train A

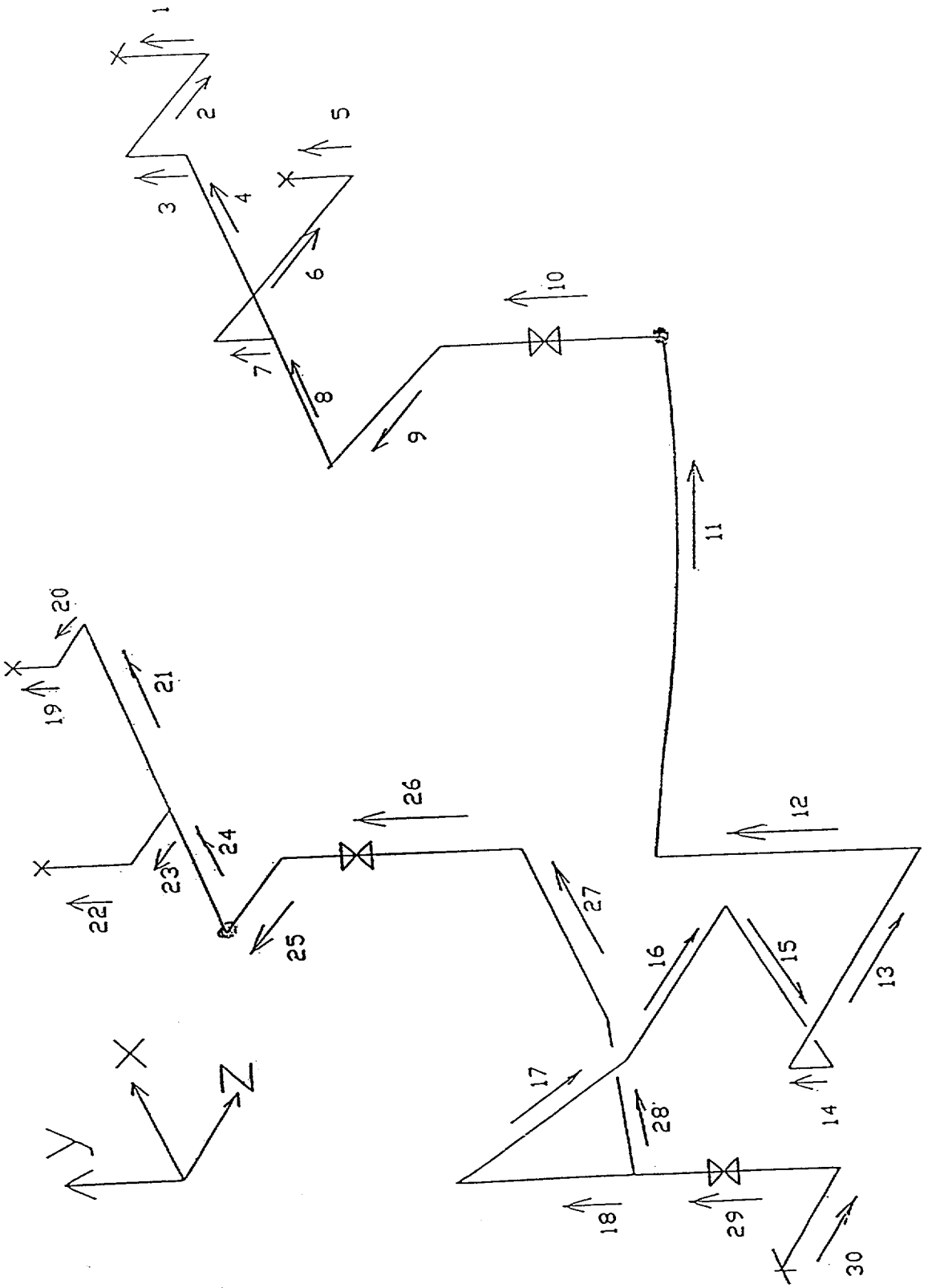

Figure C-2. Pipe Segment Identification for Train B

ATTACHMENT D

ADLPIPE COMPUTER INPUT LISTINGS FOR TRAIN "A" AND TRAIN "B" RETURN LINES

- Train "A" Return Line Computer Input Listing Condensation Induced WH ..... D-2 to D-9
- Train "B" Return Line Computer Input Listing ..... D-10 to D-24
- Train "A" Return Line Computer Input Listing Column Closure WH ..... D-25 to D-36

```
GEOMETRY, WOLFCREEK NUCLEAR OPERATING CORP.
GEOMETRY, PIPING ANA. CONTMT. AIRCOOLER "A" RETURN LINE
GEOMETRY, SNUB R013 IN @ NP1275;Wave=4135fps;Rise=17ms;Duration=34.1ms;P=179
ANCHOR,0,1000,0,0,0,
NOTE,MODEL=aci41sni.adi
NOTE,LINE=aci41sni.adi
RESTRAINT,0,1000,1,1,1,1,1,1,
NOTE, XXX PENETRATION P-73 AT NODE 1000 XXX
ANCHOR,0,2200,
RESTRAINT,0,2200,1,1,1,1,1,1,
NOTE, XXX NOZZLE AT CONTMT. COOLER SGNO1C XXX
ANCHOR,0,2850,
RESTRAINT,0,2850,1,1,1,1,1,1,
NOTE, XXX NOZZLE AT CONTMT. COOLER SGNO1A
ANCHOR,0,3050,
RESTRAINT,0,3050,1,1,1,1,1,1,
NOTE, XXX NOZZLE AT CONTMT. COOLER SGNO1A
SE,,,.0000E+00,.0000E+00,.0000E+00,.0000E+00,.0000E+00,.0000E+00,
PIPE,1000,1010,14,.437,27.9,6.13,30,10.172,
RUN,1000,1010,-2.661,0,2.273,
RUN,1010,1020,-2.661,0,2.273,
RUN,1020,1030,-2.574,0,2.199,
RUN,1030,1040,-1.901,0,1.624,
ELBOW,1040,1050,,,,21,
RUN,1050,1060,0,2,0,
RUN,1060,1070,0,2.344,0,
WEIGHT,1060,1070,114,
VALVE,1070,1080,0,.151,0,14,1.311,.001,
SE,,,.0000E+00,.0000E+00,.0000E+00,.0000E+00,.0000E+00,.0000E+00,
VALVE,1080,1090,0,.151,0,
WEIGHT,1080,1090,114,
SE,,,.0000E+00,.0000E+00,.0000E+00,.0000E+00,.0000E+00,.0000E+00,
VALVE,1080,1100,2.61,0,0,
WEIGHT,1080,1100,925,
SE,,,.0000E+00,.0000E+00,.0000E+00,.0000E+00,.0000E+00,.0000E+00,
RUN,1090,1110,0,1,0,
CHANGE,1090,1110,14,.375,,,,10.07,
RUN,1110,1120,0,1.5,0, *
RUN,1120,1130,0,3.021,0,
RUN,1130,1140,0,3,0,
ELBOW,1140,1150,,,,21,
RUN,1150,1160,0,0,2.25,
RUN,1160,1170,0,0,2.25,
RUN,1170,1180,0,0,2.25,
RUN,1180,1190,0,0,2.25,
RUN,1190,1200,0,0,1.833,
RIGID,1190,1200,344800,344800,0,
NOTE, XXX SUPPORT C005 XXX
SE,,,.0000E+00,.0000E+00,.0000E+00,.0000E+00,.0000E+00,.0000E+00,
RUN,1200,1210,0,0,3,
RUN,1210,1220,0,0,2.5,
RUN,1220,1230,0,0,2.5,
RUN,1230,1240,0,0,2.771,
ELBOW,1240,1250,,,,21,
RUN,1250,1270,2,0,0,
RUN,1270,1275,.917,
SNUBBER,1270,1275,,,277800,
```

Altran Report
96227-RR-03 Rev. 1
Att./Appx. D Sh D2

Condensation Induced Event ("CI") Train A

* Note: Weight of flanges excluded from analysis; minimal impact on stresses and loads 12/8/00

```
NOTE, *** SNUBBER R013 in model ***
RUN,1275,1280,.083,
RUN,1280,1290,2,0,0,
ELBOW,1290,1300,,,,21,
RUN,1300,1320,0,0,2.25,
RUN,1320,1330,0,0,2.25,
RUN,1330,1340,0,0,2.25,
RIGID,1330,1340,344800,344800,0,
NOTE, XXX SUPPORT C006 XXX
RUN,1340,1350,0,0,3,
RUN,1350,1360,0,0,3,
RUN,1360,1370,0,0,3,
RUN,1370,1380,0,0,3,
RIGID,1370,1380,0,344800,0,
NOTE, XXX SUPPORT H003 XXX
RUN,1380,1390,0,0,3,
RUN,1390,1400,0,0,3,
RUN,1400,1410,0,0,3,
RUN,1410,1420,0,0,3,
RIGID,1410,1420,344800,344800,0,
NOTE, XXX SUPPORT C007 XXX
SE,,,.0000E+00,.0000E+00,.0000E+00,.0000E+00,.0000E+00,.0000E+00,
RUN,1420,1430,0,0,2.615,
ELBOW,1430,1440,,,,21,
RUN,1440,1450,2.828,0,2.828,
RUN,1450,1455,2.45,0,2.45,
SKEW,1450,1455,.707,0,-.707,
RIGID,1450,1455,344800,
NOTE, XXX SUPPORT C008 XXX
RUN,1455,1460,.187,0,.187,
RIGID,1455,1460,0,344800,0,
NOTE, XXX SUPPORT C008 VERT. XXX
RUN,1460,1470,1.679,0,1.679,
RUN,1470,1480,2.121,0,2.121,
RUN,1480,1490,2.121,0,2.121,
ELBOW,1490,1500,,,,21,
RUN,1500,1510,0,2.5,0,
RUN,1510,1520,0,2.5,0,
RUN,1520,1530,0,2.333,0,
RUN,1530,1540,0,2.583,0,
RIGID,1530,1540,344800,344800,344800,
NOTE, XXX SUPPORT C017 XXX
RUN,1540,1550,0,2.917,0,
RUN,1550,1560,0,3,0,
RUN,1560,1570,0,3,0,
RIGID,1560,1570,344800,0,344800,
NOTE, XXX SUPPORT R004 XXX
SE,,,.0000E+00,.0000E+00,.0000E+00,.0000E+00,.0000E+00,.0000E+00,
RUN,1570,1580,0,2.5,0,
RUN,1580,1590,0,3,0,
RUN,1590,1600,0,3,0,
RUN,1600,1610,0,2.5,0,
RUN,1610,1620,0,2.5,0,
RUN,1620,1630,0,3,0,
RIGID,1620,1630,344800,0,344800,
NOTE, XXX SUPPORT R005 XXX
RUN,1630,1640,0,2,0,
```

Altran Report
96227-TR-03 Rev. 1
Att./Appx. D Sh D3

("CI")
Train A

Altran Report
96227-SR-03 Rev. 1
Att./Appx. D Sh D4
("CI")
Trunk A

```
RUN,1640,1650,0,2.75,0,
ELBOW,1650,1660,,,,21,
RUN,1660,1670,1.084,0,-2.766,
RUN,1670,1680,.963,0,-2.81,
RUN,1680,1690,.841,0,-2.849,
RUN,1690,1700,.717,0,-2.883,
RUN,1700,1710,.149,0,-.732,
RIGID,1700,1710,0,344800,0,
NOTE, XXX SUPPORT C019 XXX
RUN,1710,1715,.0314,0,-.164,
SKEW,1710,1715,.982,0,.188,,1,
SNUBBER,1710,1715,344800,
NOTE, XXX SUPPORT C019 SUNBBER PART XXX
RUN,1715,1720,.215,0,-1.12,
SE,,,.0000E+00,.0000E+00,.0000E+00,.0000E+00,.0000E+00,.0000E+00,
TEE,1720,1750,.155,0,-.903,
SE,,,.0000E+00,.0000E+00,.0000E+00,.0000E+00,.0000E+00,.0000E+00,
TEE,1750,1760,.155,0,-.903,
RDDUCER,1760,1765,.155,0,-1.072,10.75,.365,6.649,
RUN,1765,1770,.206,0,-1.423,
RUN,1770,1775,.246,0,-2.287,
RIGID,1770,1775,0,175400,0,
NOTE, XXX SUPPORT C018 XXX
RUN,1775,1780,.0236,0,-.22,
SKEW,1775,1780,.994,0,.107,,1,
SNUBBER,1775,1780,175400,
NOTE, XXX SUPPORT C018 SNUBBER PART XXX
RUN,1780,1790,.17,0,-2.411,
RUN,1790,1800,.085,0,-2.415,
ELBOW,1800,1810,,,,15,
RUN,1810,1820,-3.417,0,0,
RUN,1820,1830,-.938,0,0,
WEIGHT,1820,1830,54,
VALVE,1830,1840,-.156,0,0,10.75,1.095,.001,
SE,,,.0000E+00,.0000E+00,.0000E+00,.0000E+00,.0000E+00,.0000E+00,
VALVE,1840,1850,-.156,0,0,
WEIGHT,1840,1850,54,
SE,,,.0000E+00,.0000E+00,.0000E+00,.0000E+00,.0000E+00,.0000E+00,
VALVE,1840,1860,0,0,.333,
WEIGHT,1840,1860,225,
SE,,,.0000E+00,.0000E+00,.0000E+00,.0000E+00,.0000E+00,.0000E+00,
RUN,1850,1870,-1.5,0,0,
CHANGE,1850,1870,10.75,.365,,,,6.649,
RUN,1870,1880,-1.5,0,0,
RUN,1880,1890,-1.385,0,0,
RUN,1890,1900,-.802,0,0,
RIGID,1890,1900,0,175400,0,
NOTE, XXX SUPPORT H005 XXX
RUN,1900,1910,-1.448,0,0,
SE,,,.0000E+00,.0000E+00,.0000E+00,.0000E+00,.0000E+00,.0000E+00,
RDDUCER,1910,1920,-.583,0,0,8.625,.322,4.538,
RUN,1920,1930,-1.719,0,0,
RUN,1930,1940,-1.5,0,0,
RUN,1940,1950,-1.5,0,0,
ELBOW,1950,1960,,,,12,
RUN,1960,1970,0,1.5,0,
RUN,1970,1980,0,1,0,
```

```
RIGID,1970,1980,106400,0.0,
NOTE, XXX SUPPORT R010 XXX
SE,,,.0000E+00,.0000E+00,.0000E+00,.0000E+00,.0000E+00,.0000E+00,
RUN,1980,1985,0,.167,0,
SNUBBER,1980,1985,0,0,106400,
NOTE, XXX SUPPORT R010 SNUBBER PART XXX
RUN,1985,1990,0,1.333,0,
RUN,1990,2000,0,2,0,
ELBOW,2000,2010,,,,12,
RUN,2010,2020,0,0,-2.333,
RUN,2020,2030,0,0,-2.5,
RUN,2030,2040,0,0,-2.5,
RIGID,2030,2040,106400,106400,0,
NOTE, XXX SUPPORT C015 XXX
RUN,2040,2050,0,0,-2.5,
RUN,2050,2060,0,0,-2.5,
RUN,2060,2070,0,0,-2.5,
SNUBBER,2060,2070,106400,106400,
NOTE, XXX SUPPORT R012 SNUBBER PART XXX
RUN,2070,2080,0,0,-1.797,
RUN,2080,2090,0,0,-2,
ELBOW,2090,2100,,,,12,
RUN,2100,2110,1.75,0,0,
SNUBBER,2100,2110,0,0,106400,
NOTE, XXX SUPPORT R011 XXX
RUN,2110,2120,.75,0,0,
RUN,2120,2130,1.443,0,0,
ELBOW,2130,2140,,,,12,
RUN,2140,2150,0,1.5,0,
RUN,2150,2160,0,1.313,0,
RUN,2160,2200,0,1.5,0,
SE,,,.0000E+00,.0000E+00,.0000E+00,.0000E+00,.0000E+00,.0000E+00,
TEE,1750,2500,-.831,0,-.143,
CHANGE,1750,2500,10.75,.365,,,,6.649,
RUN,2500,2510,-1.323,0,0,
WEIGHT,2500,2510,54,
VALVE,2510,2520,-.156,0,0,10.75,1.095,.001,
SE,,,.0000E+00,.0000E+00,.0000E+00,.0000E+00,.0000E+00,.0000E+00,
VALVE,2520,2530,-.156,0,0,
WEIGHT,2520,2530,54,
SE,,,.0000E+00,.0000E+00,.0000E+00,.0000E+00,.0000E+00,.0000E+00,
VALVE,2520,2540,0,0,.333,
WEIGHT,2520,2540,225,
SE,,,.0000E+00,.0000E+00,.0000E+00,.0000E+00,.0000E+00,.0000E+00,
RUN,2530,2550,-1.5,0,0,
CHANGE,2530,2550,10.75,.365,,,,6.649,
RUN,2550,2560,-2,0,0,
RUN,2560,2570,-2.12,0,0,
RIGID,2560,2570,0,175400,0,
NOTE, XXX SUPPORT H006 XXX
RUN,2570,2580,-1.5,0,0,
ELBOW,2580,2590,,,,15,
RUN,2590,2600,0,2,0,
RUN,2600,2610,0,1.833,0,
RIGID,2600,2610,175400,0,0,
NOTE, XXX SUPPORT R014 XXX
RUN,2610,2615,0,.167,0,
```

Altran Report
96227-TR-03 Rev. 1
Att./Appx. D Sh D5
("CI")
Train A

```
SNUBBER,2610,2615,0,0,175400,
NOTE, XXX SUPPORT R014 PART XXX
SE,,,.0000E+00,.0000E+00,.0000E+00,.0000E+00,.0000E+00,.0000E+00,
RUN,2615,2620,0,2.083,0,
ELBOW,2620,2630,,,,15,
RUN,2630,2640,0,0,2,
RUN,2640,2650,0,0,2,
RUN,2650,2660,0,0,2,
RUN,2660,2670,0,0,1.292,
TEE,2670,2680,0,0,.708,
SE,,,.0000E+00,.0000E+00,.0000E+00,.0000E+00,.0000E+00,.0000E+00,
TEE,2680,2690,0,0,.708,
SE,,,.0000E+00,.0000E+00,.0000E+00,.0000E+00,.0000E+00,.0000E+00,
RDDUCER,2690,2700,0,0,.583,6.625,.28,2.803,
RUN,2700,2710,0,0,1,
RUN,2710,2720,0,0,1.49,
RIGID,2710,2720,59520,0,0,
NOTE, XXX SUPPORT R009 XXX
RUN,2720,2730,0,0,1.5,
RUN,2730,2740,0,0,1.5,
RIGID,2730,2740,0,119000,0,
NOTE, XXX SUPPORT H007 XXX
RUN,2740,2750,0,0,1.135,
RUN,2750,2760,0,0,2,
RUN,2760,2770,0,0,2,
RUN,2770,2780,0,0,2,
RUN,2780,2790,0,0,2,
ELBOW,2790,2800,,,,9,
RUN,2800,2810,.707,.707,0,
RUN,2810,2820,.692,.692,0,
ELBOW,2820,2830,,,,9,
RUN,2830,2840,0,1.5,0,
RUN,2840,2850,0,1.286,0,
SE,,,.0000E+00,.0000E+00,.0000E+00,.0000E+00,.0000E+00,.0000E+00,
TEE,2680,3000,.471,.471,0,
CHANGE,2680,3000,8.625,.322,,,,4.538,
RUN,3000,3010,.471,.471,0,
ELBOW,3010,3020,,,,12,
RUN,3020,3030,0,1.463,0,
RUN,3030,3040,0,1,0,
RUN,3040,3050,0,1,0,
EN,,,.0000E+00,.0000E+00,.0000E+00,.0000E+00,.0000E+00,.0000E+00
EXECUTION XXX DEADWEIGHT ANALYSIS XXX
CLASS,,,2,1974,
CONDITION,2,1,10,200,200,15000,15000,1,
MATERIAL,,,,,,,,27.9,
XPRINT,20,-27,-29,
DEADWEIGHT,,,,-1.0,
EN,,,.0000E+00,.0000E+00,.0000E+00,.0000E+00,.0000E+00,.0000E+00,
EXECUTION XXX THERMAL ANALYSIS NORM. OPER. XXX
CLASS,,,2,1974,
CONDITION,2,,20,,,15000,15000,1,
MATERIAL,,,,,,,,27.9,
TH,,,.0000E+00,.0000E+00,.0000E+00,.0000E+00,.0000E+00,.0000E+00,
EN,,,.0000E+00,.0000E+00,.0000E+00,.0000E+00,.0000E+00,.0000E+00,
EXECUTION XXX THERMAL ACCIDENT TEMP. 244 DEG. XXX
OPTION,,,,,,,2.0,
```

Altran Report
96227-TR-03 Rev. 1
Att./Appx. D Sh D6
("CI")
Train A

```
CLASS,,,2,1974,
CONDITION,2,,21,,,15000,15000,1,
MATERIAL,,,,,,,,27.9,
TH,,,.0000E+00,.0000E+00,.0000E+00,.0000E+00,.0000E+00,.0000E+00,
CHANGE,1000,1010,,,,6.477,174,,
EN,,,.0000E+00,.0000E+00,.0000E+00,.0000E+00,.0000E+00,.0000E+00,
EXECUTION XXX CONDENSATION INDUCED WATERHAMMER LOAD CASE XXX
OPTION,,,,,,,2.0,0,
CLASS,,,2,1974,
CONDITION,2,,30,,,15000,15000,1,
MATERIAL,,,,,,,,27.9,
VIBRATION,1,,.0,.001,.0533,.02,250,
SB,,,.0000E+00,.0000E+00,.0000E+00,.0000E+00,.0000E+00,.0000E+00,
XPRINT,20,-27,-29,
NOTE, XXX TABLE 1: SEGMENT 1 (NP1160) XXX
TBLE,1
X,1,1,.0,
Y,1,1,.0,
X,2,7,.0052,.0105,.0222,.0275,.0393,.0446,
Y,2,7,0,7584.8,7584.8,-7584.8,-7584.8,0,
X,8,8,0.0533,
Y,8,8,0,
NOTE, XXX TABLE 2: SEGMENT 2 (NP1060) XXX
TBLE,2
X,1,1,.0,
Y,1,1,.0,
X,2,7,.0105,.0137,.0275,.0307,.0446,.0478,
Y,2,7,0,4624.6,4624.6,-4624.6,-4624.6,0,
X,8,8,.0533,
Y,8,8,0,
NOTE, XXX TABLE 3: SEGMENT 3 (NP1030) XXX
TBLE,3
X,1,1,.0,
Y,1,1,.0,
X,2,7,.0137,.0192,.0307,.0362,.0478,.0533,
Y,2,7,0,8037.8,8037.8,-8037.8,-8037.8,0,
NOTE, XXX TABLE 5: SEGMENT 5 (NP1270) XXX
TBLE,5
X,1,1,.0,
Y,1,1,.0,
X,2,7,.0040,.0052,.0210,.0222,.0381,.0393,
Y,2,7,0,1755.8,1755.8,-1755.8,-1755.8,0,
X,8,8,.0533,
Y,8,8,0,
NOTE, XXX TABLE 6: SEGMENT 6 (NP1320) XXX
TBLE,6
X,1,1,.0,
Y,1,1,.0,
X,2,7,.0040,.0170,.0210,.0341,.0381,.0533,
Y,2,7,5860.7,5860.7,-5860.7,-5860.7,0,0,
INERTIA,,1020,.1,.1,.1,
INERTIA,,1030,.1,.1,.1,
INERTIA,,1040,.1,.1,.1,
INERTIA,,1060,.1,.1,.1,
INERTIA,,1100,.1,.1,.1,
INERTIA,,1120,.1,.1,.1,
INERTIA,,1130,.1,.1,.1,
```

Altran Report
96227-TR-03 Rev. 1
Att./Appx. D Sh D7
("CI")
Tran A

```
INERTIA,,1150,.1,.1,.1,
INERTIA,,1160,.1,.1,.1,
INERTIA,,1170,.1,.1,.1,
INERTIA,,1190,.1,.1,.1,
INERTIA,,1210,.1,.1,.1,
INERTIA,,1230,.1,.1,.1,
INERTIA,,1250,.1,.1,.1,
INERTIA,,1270,.1,.1,.1,
INERTIA,,1280,.1,.1,.1,
INERTIA,,1300,.1,.1,.1,
INERTIA,,1320,.1,.1,.1,
INERTIA,,1330,.1,.1,.1,
INERTIA,,1350,.1,.1,.1,
INERTIA,,1360,.1,.1,.1,
INERTIA,,1370,.1,.1,.1,
INERTIA,,1390,.1,.1,.1,
INERTIA,,1400,.1,.1,.1,
INERTIA,,1410,.1,.1,.1,
INERTIA,,1430,.1,.1,.1,
INERTIA,,1450,.1,.1,.1,
INERTIA,,1480,.1,.1,.1,
INERTIA,,1500,.1,.1,.1,
INERTIA,,1520,.1,.1,.1,
INERTIA,,1530,.1,.1,.1,
INERTIA,,1550,.1,.1,.1,
INERTIA,,1560,.1,.1,.1,
INERTIA,,1580,.1,.1,.1,
INERTIA,,1600,.1,.1,.1,
INERTIA,,1620,.1,.1,.1,
INERTIA,,1650,.1,.1,.1,
INERTIA,,1680,.1,.1,.1,
INERTIA,,1700,.1,.1,.1,
INERTIA,,1720,.1,.1,.1,
INERTIA,,1760,.1,.1,.1,
INERTIA,,1790,.1,.1,.1,
INERTIA,,1800,.1,.1,.1,
INERTIA,,1820,.1,.1,.1,
INERTIA,,1860,.1,.1,.1,
INERTIA,,1880,.1,.1,.1,
INERTIA,,1910,.1,.1,.1,
INERTIA,,1930,.1,.1,.1,
INERTIA,,1950,.1,.1,.1,
INERTIA,,1970,.1,.1,.1,
INERTIA,,2000,.1,.1,.1,
INERTIA,,2020,.1,.1,.1,
INERTIA,,2050,.1,.1,.1,
INERTIA,,2060,.1,.1,.1,
INERTIA,,2080,.1,.1,.1,
INERTIA,,2090,.1,.1,.1,
INERTIA,,2120,.1,.1,.1,
INERTIA,,2140,.1,.1,.1,
INERTIA,,2200,.1,.1,.1,
INERTIA,,2510,.1,.1,.1,
INERTIA,,2540,.1,.1,.1,
INERTIA,,2560,.1,.1,.1,
INERTIA,,2580,.1,.1,.1,
INERTIA,,2590,.1,.1,.1,
```

Altran Report
96227-TR-03 Rev. 1
Att./Appx. D Sh D8

("CI")
Tram A

```
INERTIA,,2600,.1,.1,.1,
INERTIA,,2620,.1,.1,.1,
INERTIA,,2640,.1,.1,.1,
INERTIA,,2660,.1,.1,.1,
INERTIA,,2680,.1,.1,.1,
INERTIA,,2710,.1,.1,.1,
INERTIA,,2730,.1,.1,.1,
INERTIA,,2760,.1,.1,.1,
INERTIA,,2780,.1,.1,.1,
INERTIA,,2810,.1,.1,.1,
INERTIA,,2840,.1,.1,.1,
INERTIA,,3010,.1,.1,.1,
INERTIA,,3040,.1,.1,.1,
NOTE, XXX TABLE OF FORCING FUNCTIONS XXX
FF,1,1160,0,0,1.0,
FF,2,1060,0,1.0,0,
FF,3,1030,-0.761,0,0.649,
FF,5,1270,1.0,0,0,
FF,6,1320,0,0,1.0,
EN,,,.0000E+00,.0000E+00,.0000E+00,.0000E+00,.0000E+00,.0000E+00,
EXECUTION   **  LOAD CASE SUMMATIONS  **
NE,2,,.1000E+02,.2000E+02,.0000E+00,.0000E+00,.0000E+00,.4000E+02,
NE,2,,.1000E+02,.2100E+02,.0000E+00,.0000E+00,.0000E+00,.4100E+02,
EN,,,.0000E+00,.0000E+00,.0000E+00,.0000E+00,.0000E+00,.0000E+00,
EXECUTION   **  LOAD CASE SUMMATIONS DL + TH; DL + TH2 **
OU,1,,.4000E+02,.0000E+00,.0000E+00,.0000E+00,.0000E+00,.0000E+00,
OU,2,,.4000E+02,.0000E+00,.0000E+00,.0000E+00,.0000E+00,.0000E+00,
OU,3,,.4000E+02,.0000E+00,.0000E+00,.0000E+00,.0000E+00,.0000E+00,
OU,1,,.4100E+02,.0000E+00,.0000E+00,.0000E+00,.0000E+00,.0000E+00,
OU,2,,.4100E+02,.0000E+00,.0000E+00,.0000E+00,.0000E+00,.0000E+00,
OU,3,,.4100E+02,.0000E+00,.0000E+00,.0000E+00,.0000E+00,.0000E+00,
EN,,,.0000E+00,.0000E+00,.0000E+00,.0000E+00,.0000E+00,.0000E+00,
EXECUTION   ** LOAD CASE SUMMATIONS  **
NE,3,,.3000E+02,.4000E+02,.0000E+00,.0000E+00,.0000E+00,.5000E+02,
NE,3,,.3000E+02,.4100E+02,.0000E+00,.0000E+00,.0000E+00,.5100E+02,
EN,,,.0000E+00,.0000E+00,.0000E+00,.0000E+00,.0000E+00,.0000E+00,
EXECUTION   **  LOAD CASE SUMMATIONS DL + TH2 + WH **
OU,1,4,.5100E+02,.0000E+00,.0000E+00,.0000E+00,.0000E+00,.0000E+00,
OU,2,4,.5100E+02,.0000E+00,.0000E+00,.0000E+00,.0000E+00,.0000E+00,
OU,3,4,.5100E+02,.0000E+00,.0000E+00,.0000E+00,.0000E+00,.0000E+00,
EN,,,.0000E+00,.0000E+00,.0000E+00,.0000E+00,.0000E+00,.0000E+00,
EXECUTION   ** CODE STRESS SUMMATIONS  **
EQ,8,,.1000E+02,.0000E+00,.0000E+00,.0000E+00,.0000E+00,.0000E+00,
EQ,9,,.1000E+02,.3000E+02,.0000E+00,.0000E+00,.0000E+00,.0000E+00,
EQ,10,,.0000E+00,.2000E+02,.0000E+00,.0000E+00,.0000E+00,.0000E+00,
EQ,10,,.0000E+00,.2100E+02,.0000E+00,.0000E+00,.0000E+00,.0000E+00,
EN,,,.0000E+00,.0000E+00,.0000E+00,.0000E+00,.0000E+00,.0000E+00,
```

Altran Report
96227-TR-03 Rev. 1
Att./Appx. D Sh D9

("CI")
Tram A

```
GEOMETRY, WOLF CREEK NUCLEAR OPERATING CORP.- ESW PROB 201, 96227-TR-03,
GEOMETRY, STRESS ANA. OF CONTAINMENT COOLING SYS., TRAIN B-RETURN LINE,
GEOMETRY, R001 RIGID @ NP65 IN MODEL;Wave=4135fps
NOTE,MODEL=bcci41ri.adi
NOTE,LINE=bcci41ri.adi
NOTE, 2% DAMPING
AN,0,5,
RE,0,5,1,1,1,1,1,1,
RE,0,2600,1,1,1,1,1,1,
RE,0,2750,1,1,1,1,1,1,
RE,0,4300,1,1,1,1,1,1,
RE,0,4500,1,1,1,1,1,1,
JU,0,40,
JU,0,57,
JU,0,65,
JU,0,85,
JU,0,100,
JU,0,117,
JU,0,140,
JU,0,160,
JU,0,172,
JU,0,187,
JU,0,215,
JU,0,217,
JU,0,223,
JU,0,240,
JU,0,260,
JU,0,275,
JU,0,320,
JU,0,335,
JU,0,347,
JU,0,390,
JU,0,399,
JU,0,407,
JU,0,409,
JU,0,430,
JU,0,450,
INERTIA,0,12,.1,.1,.1,
INERTIA,0,20,.1,.1,.1,
INERTIA,0,2121,.1,.1,.1,
INERTIA,0,27,.1,.1,.1,
INERTIA,0,30,.1,.1,.1,
INERTIA,0,32,.1,.1,.1,
INERTIA,0,39,.1,.1,.1,
INERTIA,0,45,.1,.1,.1,
INERTIA,0,50,.1,.1,.1,
INERTIA,0,55,.1,.1,.1,
INERTIA,0,70,.1,.1,.1,
INERTIA,0,80,.1,.1,.1,
INERTIA,0,90,.1,.1,.1,
INERTIA,0,95,.1,.1,.1,
INERTIA,0,105,.1,.1,.1,
INERTIA,0,110,.1,.1,.1,
INERTIA,0,111,.1,.1,.1,
INERTIA,0,113,.1,.1,.1,
INERTIA,0,115,.1,.1,.1,
INERTIA,0,116,.1,.1,.1,
```

Altran Report
96227-TR-03 Rev. 1
Att./Appx. D Sh D10
Train B

```
INERTIA,0,120,.1,.1,.1,
INERTIA,0,130,.1,.1,.1,
INERTIA,0,145,.1,.1,.1,
INERTIA,0,150,.1,.1,.1,
INERTIA,0,165,.1,.1,.1,
INERTIA,0,170,.1,.1,.1,
INERTIA,0,175,.1,.1,.1,
INERTIA,0,176,.1,.1,.1,
INERTIA,0,173,.1,.1,.1,
INERTIA,0,180,.1,.1,.1,
INERTIA,0,195,.1,.1,.1,
INERTIA,0,196,.1,.1,.1,
INERTIA,0,205,.1,.1,.1,
INERTIA,0,207,.1,.1,.1,
INERTIA,0,211,.1,.1,.1,
INERTIA,0,216,.1,.1,.1,
INERTIA,0,220,.1,.1,.1,
INERTIA,0,225,.1,.1,.1,
INERTIA,0,230,.1,.1,.1,
INERTIA,0,243,.1,.1,.1,
INERTIA,0,250,.1,.1,.1,
INERTIA,0,253,.1,.1,.1,
INERTIA,0,257,.1,.1,.1,
INERTIA,0,265,.1,.1,.1,
INERTIA,0,268,.1,.1,.1,
INERTIA,0,272,.1,.1,.1,
INERTIA,0,297,.1,.1,.1,
INERTIA,0,305,.1,.1,.1,
INERTIA,0,310,.1,.1,.1,
INERTIA,0,330,.1,.1,.1,
INERTIA,0,340,.1,.1,.1,
INERTIA,0,350,.1,.1,.1,
INERTIA,0,370,.1,.1,.1,
INERTIA,0,371,.1,.1,.1,
INERTIA,0,382,.1,.1,.1,
INERTIA,0,391,.1,.1,.1,
INERTIA,0,403,.1,.1,.1,
INERTIA,0,400,.1,.1,.1,
INERTIA,0,412,.1,.1,.1,
INERTIA,0,415,.1,.1,.1,
INERTIA,0,427,.1,.1,.1,
INERTIA,0,440,.1,.1,.1,
INERTIA,0,447,.1,.1,.1,
INERTIA,0,1155,.1,.1,.1,
SE,,,.0000E+00,.0000E+00,.0000E+00,.0000E+00,.0000E+00,.0000E+00,
NOTE,PIPE,NB,NE,OD,t,E,ALPHA,DT,w,
PIPE,5,32,14,.438,27.9,6.13,30,10.17,
NOTE, RUN,N1,N2,DX,DY,DZ,
RUN,5,10,.825,0.,.854,
WEIGHT,5,10,20,
RUN,10,12,.174,0.,.18,
RUN,12,15,1.389,0.,1.439,
NOTE, ELB,N1,N2,OD,t,,RC,THETA,WL,
ELB,15,16,,,,21,
RUN,16,17,,3.948,
NO,JBEND,N1,N2,SIF,
JBEND,16,17,1.67,
```

Altran Report
96227-AR-03 Rev. 1
Att./Appx. D Sh D11
Trans

```
NO,1VALVE,N1,N2,DX,DY,DZ,OD,t,w,
1VALVE,17,20,,.448,,,.876,4.883,
SE,,,.0000E+00,.0000E+00,.0000E+00,.0000E+00,.0000E+00,.0000E+00,
1VALVE,20,21,-.00723,-.0408,.167,,.876,.01,
NO,WEIGHT,I1,I2,WT,
WEIGHT,20,21,675,
1VALVE,21,2121,-.103,-.582,2.371,,.876,.01,
WEIGHT,21,2121,250,
SE,,,.0000E+00,.0000E+00,.0000E+00,.0000E+00,.0000E+00,.0000E+00,
1VALVE,20,22,,.25,,,.876,4.883,
WEIGHT,20,22,102,
RUN,22,25,,1,
CHANG,22,25,0.,.375,0.,0.,0.0,10.07,
WEIGHT,22,25,20,
RUN,25,27,,1.5,
WEIGHT,25,27,204,
RUN,27,30,,3.854,
JBEND,27,30,2.806,
SE,,,.0000E+00,.0000E+00,.0000E+00,.0000E+00,.0000E+00,.0000E+00,
RUN,30,31,,1.126,
NO,RDUCER,N1,N2,DX,DY,DZ,OD,t,w,
RDUCER,31,32,,1.083,,10.75,.365,6.649,
RADIUS,31,32,,,,,14.036,
RUN,32,35,,1.791,
ELB,35,36,,,,15,
RUN,36,39,-1.427,,1.427,
RUN,39,37,-1.427,,1.427,
ELB,37,38,,,,15,
RUN,38,40,,,3.115,
SPRING,38,40,175400,175400,
RUN,40,45,,,7,
RUN,45,50,,,5,
RUN,50,55,,,5,
RUN,55,57,,,3.302,
SPRING,55,57,175400,175400,
RUN,57,60,,,2.417,
ELB,60,61,,,,15,
RUN,61,65,-5,
SPRING,61,65,,,175400,
RUN,65,70,-5,
RUN,70,75,-3.005,
TAN,75,80,-1.25,
ELB,75,80,,,,15,
TAN,80,81,,2.5,
ELB,80,81,,,,15,
TAN,80,81,,,1.25,
RUN,81,85,,,.813,
SPRING,81,85,175400,175400,
RUN,85,90,,,8,
RUN,90,95,,,8,
RUN,95,100,,,7.104,
SPRING,95,100,175400,175400,
RUN,100,105,,,7,
RUN,105,110,,,8.974,
ELB,110,111,,,,15,
RUN,111,113,,2.25,
RUN,113,115,,2.25,
```

Altran Report
96227-TR-03 Rev. 1
Att./Appx. D Sh D12
Track B

```
ELB,115,1155,,,,15,
RUN,1155,116,.547,,1.489,
RUN,116,117,.584,,1.475,
SKEW,116,117,.926,,-.378,,1,
SPRING,116,117,175400,175400,175400,
RUN,117,120,2.399,,5.224,
RUN,120,130,2.841,,4.998,
RUN,130,140,3.26,,4.736,
SKEW,130,140,.799,,-.602,,1,
SPRING,130,140,175400,175400,
RUN,140,145,4.27,,5.113,
RUN,145,150,4.757,,4.662,
RUN,150,160,5.197,,4.168,
SKEW,150,160,.586,,-.811,,1,
SPRING,150,160,175400,175400,
RUN,160,165,5.164,,3.378,
RUN,165,170,5.453,,2.889,
RUN,170,172,5.696,,2.374,
SKEW,170,172,.342,,-.94,,1,
SPRING,170,172,175400,
RUN,172,173,1.411,,.495,
RUN,173,175,1.422,,.464,
ELB,175,176,,,,15,
RUN,176,180,,10,
RUN,180,187,,11,
SPRING,180,187,175400,,175400,
RUN,187,190,,4.333,
WEIGHT,187,190,52,
1VALVE,190,195,,.188,,,.73,3.276,
SE,,,.0000E+00,.0000E+00,.0000E+00,.0000E+00,.0000E+00,.0000E+00,
1VALVE,195,196,-.308,-.0258,-.152,,.73,.01,
WEIGHT,195,196,225,
SE,,,.0000E+00,.0000E+00,.0000E+00,.0000E+00,.0000E+00,.0000E+00,
1VALVE,195,200,,.125,,,.73,3.276,
WEIGHT,195,200,52,
RUN,200,205,,1.5,
CHANG,200,205,0.0,.365,0.0,0.0,0.0,6.649,
WEIGHT,200,205,20,
RUN,205,207,,1,
WEIGHT,205,207,20,
RUN,207,210,,7.854,
ELB,210,211,,,,15,
RUN,211,215,,,-4.75,
SPRING,211,215,,175400,
RUN,215,216,,,-.552,
RUN,216,217,,,-1.594,
SNUBBER,216,217,175400,
RUN,217,220,,,-3.708,
ELB,220,221,,,,15,
RUN,221,223,1.865,
SPRING,221,223,,175400,175400,
RUN,223,225,3.135,
RUN,225,226,6.333,
RUN,226,230,.708,
JBEND,226,230,2.384,
SE,,,.0000E+00,.0000E+00,.0000E+00,.0000E+00,.0000E+00,.0000E+00,
RUN,230,232,.708,
```

Altran Report
96227-TR-03 Rev. 1
Att./Appx. D Sh D13

Train B

```
RDUCER,232,235,.583,,,8.625,.322,4.537,
RADIUS,232,235,,,,,16.887,
RUN,235,240,6.667,
SPRING,235,240,,106400,106400,
RUN,240,243,2.979,
RUN,243,245,3.979,
TAN,245,250,1,
ELB,245,250,,,,12,
TAN,250,251,,2,
ELB,250,251,,,,12,
TAN,250,251,,,1,
RUN,251,253,,,1.771,
RUN,253,255,,,1.771,
ELB,255,256,,,,12,
RUN,256,257,,2.281,
RUN,257,258,,1.115,
WEIGHT,257,258,39,
RUN,258,260,,.167,
SE,,,.0000E+00,.0000E+00,.0000E+00,.0000E+00,.0000E+00,.0000E+00,
RUN,260,2600,.1,0,0,0,1,
2SPRING,260,2600,77900,246000,142000,.1E11,.495E7,.1E11,
SE,,,.0000E+00,.0000E+00,.0000E+00,.0000E+00,.0000E+00,.0000E+00,
PIPE,230,275,6.625,.28,27.9,,,2.803,
RUN,230,265,,2,
OFSET,230,265,.11,
ELB,265,266,,,,9,
RUN,266,268,,,2.589,
JBEND,266,268,1,
RUN,268,270,,,2.589,
ELB,270,271,,,,9,
RUN,271,272,,2.156,
JBEND,271,272,1,
RUN,272,273,,1.24,
WEIGHT,272,273,24,
JBEND,272,273,1.8,
RUN,273,275,,.167,
OFSET,273,275,.001,
SE,,,.0000E+00,.0000E+00,.0000E+00,.0000E+00,.0000E+00,.0000E+00,
RUN,275,2750,.1,0,0,0,1,
2SPRING,275,2750,72500,316000,77700,.133E8,.495E7,.495E7,
SE,,,.0000E+00,.0000E+00,.0000E+00,.0000E+00,.0000E+00,.0000E+00,
PIPE,30,360,10.75,.365,27.9,,,6.649,
RUN,30,295,.597,,.597,
RUN,295,297,.388,,.388,
RUN,297,300,1.869,,1.869,
ELB,300,301,,,,15,
RUN,301,305,5,
RUN,305,310,5,
RUN,310,320,8.036,
SPRING,310,320,,175400,175400,
RUN,320,325,5.333,
ELB,325,326,,,,15,
RUN,326,330,,6,
RUN,330,335,,7.5,
SPRING,330,335,,,175400,
RUN,335,340,,6.25,
RUN,340,347,,6.25,
```

Altran Report
96227-TR-03 Rev. 1
Att./Appx. D Sh D14
Train B

```
SPRING,340,347,175400,175400,175400,
RUN,347,350,,4,
RUN,350,360,,6.333,
WEIGHT,350,360,52,
1VALVE,360,370,,.188,,,.73,3.276,
SE,,,.0000E+00,.0000E+00,.0000E+00,.0000E+00,.0000E+00,.0000E+00,
1VALVE,370,371,-.342,-.0258,-.0375,,.73,.01,
WEIGHT,370,371,225,
SE,,,.0000E+00,.0000E+00,.0000E+00,.0000E+00,.0000E+00,.0000E+00,
1VALVE,370,375,,.125,,,.73,3.276,
WEIGHT,370,375,52,
RUN,375,380,,1.5,
CHANG,375,380,0.0,.365,0.0,0.0,0.0,6.649,
WEIGHT,375,380,20,
RUN,380,382,,1,
WEIGHT,380,382,20,
RUN,382,385,,7.854,
ELB,385,386,,,,15,
RUN,386,390,,,-1.5,
SPRING,386,390,175400,
RUN,390,391,,,-3,
RUN,391,392,,,-1.5,
RUN,392,395,,,-4,
ELB,395,396,,,,15,
RUN,396,399,4.5,
SPRING,396,399,,175400,175400,
RUN,399,403,1.979,
RUN,403,401,4.521,
TEE,401,400,.708,
SE,,,.0000E+00,.0000E+00,.0000E+00,.0000E+00,.0000E+00,.0000E+00,
TEE,400,402,.708,
RDUCER,402,405,.583,,,6.625,.28,2.803,
RADIUS,402,405,,,,,30.51,
RUN,405,407,6.667,
SPRING,405,407,,59520,59520,
RUN,407,409,1.042,
SNUBBER,407,409,59520,
RUN,409,412,3.083,
JBEND,409,412,1,
RUN,412,410,3.833,
OFSET,412,410,.11,
ELB,410,411,,,,9,
RUN,411,415,,,-1.25,
JBEND,411,415,1,
RUN,415,425,,,-2.427,
ELB,425,426,,,,9,
RUN,426,427,,3.156,
JBEND,426,427,1,
RUN,427,428,,2.24,
WEIGHT,427,428,24,
JBEND,427,428,1.8,
RUN,428,430,,.167,
OFSET,428,430,.001,
SE,,,.0000E+00,.0000E+00,.0000E+00,.0000E+00,.0000E+00,.0000E+00,
RUN,430,4300,.1,0,0,0,1,
2SPRING,430,4300,72500,316000,77700,.133E8,.495E7,.495E7,
SE,,,.0000E+00,.0000E+00,.0000E+00,.0000E+00,.0000E+00,.0000E+00,
```

Altran Report
96227-TR-03 Rev. 1
Att./Appx. D Sh D15
Train B

Anran Report
96227-TR-03 Rev. 1
Att./Appx. D Sh D16
Train B

```
NOTE,PIPE,NB,NE,OD,t,E,ALPHA,DT,w,
PIPE,400,450,8.625,.322,27.9,,,4.537,
TEE,400,435,,,-.667,
RUN,435,440,,,-.354,
RUN,440,445,,,-2.021,
ELB,445,446,,,,12,
RUN,446,447,,3.281,
RUN,447,448,,2.115,
WEIGHT,447,448,39,
RUN,448,450,,.167,
SE,,,.0000E+00,.0000E+00,.0000E+00,.0000E+00,.0000E+00,.0000E+00,
RUN,450,4500,.1,0,0,0,1,
2SPRING,450,4500,77900,246000,142000,.1E11,.495E7,.1E11,
NO,SPRING,I1,I2,KX,KY,KZ,KPX,KPY,KPZ,
NOTE,restraint REturned to MODEL NODE 65
NOTE,SPRING,75,80,1.754E5,,1.754E5,
NOTE,NEW X,Z RIGID DELETED AT NODE 80,
NO,SKEW,I1,I2,DX1,DY1,DZ1,DX2,DY2,DZ2,
EN,,,.0000E+00,.0000E+00,.0000E+00,.0000E+00,.0000E+00,.0000E+00
EXEC, DEADWEIGHT LOADS (FILE 10)
CLASS,,,2,1974,
CONDITION,2,1,10,200.,200.,15000.,15000.,1,
MATERIAL,,,,,,,,27.9,
XPRINT,20,-27,-29,
DEADWEIGHT,,,,-1.,
EN,,,.0000E+00,.0000E+00,.0000E+00,.0000E+00,.0000E+00,.0000E+00,
NO,-----------------------------------------------
EXEC, THERMAL-NORMAL OPER. LOADS (FILE 20)
CLASS,,,2,1974,
CONDITION,2,0,20,200.,200.,15000.,15000.,1,
MATERIAL,,,,,,,,27.9,
XPRINT,20,-27,-29,
TH,,,.0000E+00,.0000E+00,.0000E+00,.0000E+00,.0000E+00,.0000E+00,
EN,,,.0000E+00,.0000E+00,.0000E+00,.0000E+00,.0000E+00,.0000E+00,
NO,-----------------------------------------------
EXEC, THERMAL-ACCIDENT TEMP. 244 DEG. LOADS (FILE 21)
CLASS,,,2,1974,
CONDITION,2,0,21,200.,200.,15000.,15000.,1,
MATERIAL,,,,,,,,27.9,
XPRINT,20,-27,-29,
TH,,,.0000E+00,.0000E+00,.0000E+00,.0000E+00,.0000E+00,.0000E+00,
CHANGE,5,10,,,,6.477,174,,
EN,,,.0000E+00,.0000E+00,.0000E+00,.0000E+00,.0000E+00,.0000E+00,
NO,-----------------------------------------------
EXEC, WATERHAMMER-CONDENSATE INDUCED W=4135fps Rise=13.5ms Dur=27ms(FILE 30)
CLASS,,,2,1974,
CONDITION,2,0,30,,,15000.,15000.,1,
MATERIAL,,,,,,,,27.9,
VIBRATION,1,,0.0,0.001,.0650,0.02,300,
XPRINT,20,-27,-29,
NOTE, XXX TABLE 1: SEGMENT 11 (NODE 130) XXX
TBLE,1
X,1,1,.0,
Y,1,1,.0,
X,2,7,.0075,.0135,.0210,.0270,.0345,.0650,
Y,2,7,7843.,7843.,-7843.,-7843.,.0,.0,
NOTE, XXX TABLE 2: SEGMENT 12 (NODE 113) XXX
```

```
TBLE,2
X,1,1,.0,
Y,1,1,.0,
X,2,7,.0075,.0086,.0210,.0221,.0345,.0356,
Y,2,7,0.,1138.5,1138.5,-1138.5,-1138.5,.0,
X,8,8,.0650,
Y,8,8,.0,
NOTE, XXX TABLE 3: SEGMENT 13 (NODE 95) XXX
TBLE,3
X,1,1,.0,
Y,1,1,.0,
X,2,7,.0086,.0185,.0221,.0320,.0356,.0455,
Y,2,7,.0,10411.,10411.,-10411.,-10411.,0.,
X,8,8,.0650,
Y,8,8,.0,
NOTE, XXX TABLE 4: SEGMENT 14 (NODE 80) XXX
TBLE,4
X,1,1,.0,
Y,1,1,.0,
X,2,7,.0185,.0191,.0320,.0326,.0455,.0461,
Y,2,7,.0,632.5,632.5,-632.5,-632.5,.0,
X,8,8,.0650,
Y,8,8,.0,
NOTE, XXX TABLE 5: SEGMENT 15 (NODE 70) XXX
TBLE,5
X,1,1,.0,
Y,1,1,.0,
X,2,7,.0191,.0226,.0326,.0361,.0461,.0496,
Y,2,7,.0,3607.8,3607.8,-3607.8,-3607.8,.0,
X,8,8,.0650,
Y,8,8,.0,
NOTE, XXX TABLE 6: SEGMENT 16 (NODE 50) XXX
TBLE,6
X,1,1,.0,
Y,1,1,.0,
X,2,7,.0226,.0288,.0361,.0423,.0496,.0558,
Y,2,7,.0,6535.,6535.,-6535.,-6535.,.0,
X,8,8,.0650,
Y,8,8,.0,
NOTE, XXX TABLE 7: SEGMENT 17 (NODE 39) XXX
TBLE,7
X,1,1,.0,
Y,1,1,.0,
X,2,7,.0288,.0298,.0423,.0433,.0558,.0568,
Y,2,7,.0,1022.1,1022.1,-1022.1,-1022.1,.0,
X,8,8,.0650,
Y,8,8,.0,
NOTE, XXX TABLE 8: SEGMENT 18 (NODE 32) XXX
TBLE,8
X,1,1,.0,
Y,1,1,.0,
X,2,7,.0298,.0308,.0433,.0443,.0568,.0578,
Y,2,7,.0,1287.7,1287.7,-1287.7,-1287.7,0.0,
X,8,8,.0650,
Y,8,8,.0,
NOTE, XXX TABLE 9: SEGMENT 29 (NODE 27) XXX
TBLE,9
```

Altran Report
96227-TR-03 Rev. 1
Att./Appx. D Sh D17
Trem B

```
X,1,1,.0,
Y,1,1,.0,
X,2,7,.0308,.0334,.0443,.0469,.0578,.0604,
Y,2,7,.0,2753.1,2753.1,-2753.1,-2753.1,.0,
X,8,8,.0650,
Y,8,8,.0,
NOTE, XXX TABLE 10: SEGMENT 30 (NODE 12) XXX
TBLE,10
X,1,1,.0,
Y,1,1,.0,
X,2,7,.0334,.0380,.0469,.0515,.0604,.0650,
Y,2,7,.0,4745.3,4745.3,-4745.3,-4745.3,.0,
NOTE, XXX TABLE 11: SEGMENT 28 (NODE 297) XXX
TBLE,11
X,1,1,.0,
Y,1,1,.0,
X,2,7,.0308,.0318,.0443,.0453,.0578,.0588,
Y,2,7,.0,578.5,578.5,-578.5,-578.5,.0,
X,8,8,.0650,
Y,8,8,.0,
NOTE, XXX TABLE 12: SEGMENT 27 (NODE 310) XXX
TBLE,12
X,1,1,.0,
Y,1,1,.0,
X,2,7,.0318,.0374,.0453,.0509,.0588,.0644,
Y,2,7,.0,3346.5,3346.5,-3346.5,-3346.5,.0,
X,8,8,.0650,
Y,8,8,.0,
FF,1,130,0.707,0,0.707,
FF,2,113,0,1,0,
FF,3,95,0,0,1.,
FF,4,80,0,1.,0,
FF,5,70,-1.,0,0,
FF,6,50,0,0,1.,
FF,7,39,-0.7071,0,0.7071,
FF,8,32,0,1.,0,
FF,9,27,0,1.,0,
FF,10,12,0.695,0,0.7193,
FF,11,297,-0.7071,0,-0.7071,
FF,12,310,-1.0,0,0,
EN,,,.0000E+00,.0000E+00,.0000E+00,.0000E+00,.0000E+00,.0000E+00,
NO,-----------------------------------------------
EXEC, WATERHAMMER-COLUMN CLOSURE W=4135fps Rise=100ms Dur=200ms P=205(FILE 40)
CLASS,,,2,1974,
CONDITION,2,0,40,,,15000.,15000.,1,
MATERIAL,,,,,,,,27.9,
VIBRATION,1,,0.0,0.001,.2669,0.02,300,
XPRINT,20,-27,-29,
NOTE, XXX TABLE 1: SEGMENT 11 (NODE 130) XXX
TBLE,1
X,1,1,.0,
Y,1,1,.0,
X,2,7,.0148,.1,.1148,.2,.2148,.2669,
Y,2,7,2390.0,2390.0,-2390.0,-2390.0,.0,.0,
NOTE, XXX TABLE 2: SEGMENT 12 (NODE 113) XXX
TBLE,2
X,1,1,.0,
```

Altran Report
9622-7-TR-03 Rev. 1
Att./Appx. D Sh D18
Trans B

```
Y,1,1,.0,
X,2,7,.0148,.0159,.1148,.1159,.2148,.2159,
Y,2,7,0.,176.0,176.0,-176.0,-176.0,.0,
X,8,8,.2669,
Y,8,8,.0,
NOTE, XXX TABLE 3: SEGMENT 13 (NODE 95) XXX
TBLE,3
X,1,1,.0,
Y,1,1,.0,
X,2,7,.0159,.0258,.1159,.1258,.2159,.2258,
Y,2,7,.0,1609.6,1609.6,-1609.6,-1609.6,0.,
X,8,8,.2669,
Y,8,8,.0,
NOTE, XXX TABLE 4: SEGMENT 14 (NODE 80) XXX
TBLE,4
X,1,1,.0,
Y,1,1,.0,
X,2,7,.0258,.0264,.1258,.1264,.2258,.2264,
Y,2,7,.0,97.8,97.8,-97.8,-97.8,.0,
X,8,8,.2669,
Y,8,8,.0,
NOTE, XXX TABLE 5: SEGMENT 15 (NODE 70) XXX
TBLE,5
X,1,1,.0,
Y,1,1,.0,
X,2,7,.0264,.0299,.1264,.1299,.2264,.2299,
Y,2,7,.0,557.8,557.8,-557.8,-557.8,.0,
X,8,8,.2669,
Y,8,8,.0,
NOTE, XXX TABLE 6: SEGMENT 16 (NODE 50) XXX
TBLE,6
X,1,1,.0,
Y,1,1,.0,
X,2,7,.0299,.0361,.1299,.1361,.2299,.2361,
Y,2,7,.0,1010.4,1010.4,-1010.4,-1010.4,.0,
X,8,8,.2669,
Y,8,8,.0,
NOTE, XXX TABLE 7: SEGMENT 17 (NODE 39) XXX
TBLE,7
X,1,1,.0,
Y,1,1,.0,
X,2,7,.0361,.0371,.1361,.1371,.2361,.2371,
Y,2,7,.0,158.0,158.0,-158.0,-158.0,.0,
X,8,8,.2669,
Y,8,8,.0,
NOTE, XXX TABLE 8: SEGMENT 18 (NODE 32) XXX
TBLE,8
X,1,1,.0,
Y,1,1,.0,
X,2,7,.0371,.0381,.1371,.1381,.2371,.2381,
Y,2,7,.0,199.1,199.1,-199.1,-199.1,0.0,
X,8,8,.2669,
Y,8,8,.0,
NOTE, XXX TABLE 9: SEGMENT 29 (NODE 27) XXX
TBLE,9
X,1,1,.0,
Y,1,1,.0,
```

Altran Report
96227-PR-03 Rev. 1
Att./Appx. D Sh D19
Trans B

```
X,2,7,.0381,.0407,.1381,.1407,.2381,.2407,
Y,2,7,.0,425.6,425.6,-425.6,-425.6,.0,
X,8,8,.2669,
Y,8,8,.0,
NOTE, XXX TABLE 10: SEGMENT 30 (NODE 12) XXX
TBLE,10
X,1,1,.0,
Y,1,1,.0,
X,2,7,.0407,.0453,.1407,.1453,.2407,.2453,
Y,2,7,.0,733.7,733.7,-733.7,-733.7,.0,
X,8,8,.2669,
Y,8,8,.0,
NOTE, XXX TABLE 11: SEGMENT 10 (NODE 205) XXX
TBLE,11
X,1,1,.0,
Y,1,1,.0,
X,2,7,.0087,.100,.1087,.200,.2087,.2669,
Y,2,7,1408.2,1408.2,-1408.2,-1408.2,.0,.0,
NOTE, XXX TABLE 12: SEGMENT 9 (NODE 216) XXX
TBLE,12
X,1,1,.0,
Y,1,1,.0,
X,2,7,.0087,.0113,.1087,.1113,.2087,.2113,
Y,2,7,.0,414.6,414.6,-414.6,-414.6,.0,
X,8,8,.2669,
Y,8,8,.0,
NOTE, XXX TABLE 13: SEGMENT 8 (NODE 225) XXX
TBLE,13
X,1,1,.0,
Y,1,1,.0,
X,2,7,.0113,.0142,.1113,.1142,.2113,.2142,
Y,2,7,.0,471.0,471.0,-471.0,-471.0,.0,
X,8,8,.2669,
Y,8,8,.0,
NOTE, XXX TABLE 14: SEGMENT 4 (NODE 243) XXX
TBLE,14
X,1,1,.0,
Y,1,1,.0,
X,2,7,.0142,.0180,.1142,.1180,.2142,.2180,
Y,2,7,0.,394.6,394.6,-394.6,-394.6,.0,
X,8,8,.2669,
Y,8,8,.0,
NOTE, XXX TABLE 15: SEGMENT 3 (NODE 250) XXX
TBLE,15
X,1,1,.0,
Y,1,1,.0,
X,2,7,.0180,.0185,.1180,.1185,.2180,.2185,
Y,2,7,.0,49.6,49.6,-49.6,-49.6,0.,
X,8,8,.2669,
Y,8,8,.0,
NOTE, XXX TABLE 16: SEGMENT 2 (NODE 253) XXX
TBLE,16
X,1,1,.0,
Y,1,1,.0,
X,2,7,.0185,.0196,.1185,.1196,.2185,.2196,
Y,2,7,.0,112.5,112.5,-112.5,-112.5,.0,
X,8,8,.2669,
```

Altran Report
96227-TR-03 Rev. 1
Att./Appx. D Sh D20
Tab B

```
Y,8,8,.0,
NOTE, XXX TABLE 17: SEGMENT 1 (NODE 257) XXX
TBLE,17
X,1,1,.0,
Y,1,1,.0,
X,2,7,.0196,.0205,.1196,.1205,.2196,.2205,
Y,2,7,.0,88.2,88.2,-88.2,-88.2,.0,
X,8,8,.2669,
Y,8,8,.0,
NOTE, XXX TABLE 18: SEGMENT 28 (NODE 297) XXX
TBLE,18
X,1,1,.0,
Y,1,1,.0,
X,2,7,.0381,.0390,.1381,.1390,.2381,.2390,
Y,2,7,.0,89.4,89.4,-89.4,-89.4,.0,
X,8,8,.2669,
Y,8,8,.0,
NOTE, XXX TABLE 19: SEGMENT 27 (NODE 310) XXX
TBLE,19
X,1,1,.0,
Y,1,1,.0,
X,2,7,.0390,.0447,.1390,.1447,.2390,.2447,
Y,2,7,.0,517.4,517.4,-517.4,-517.4,.0,
X,8,8,.2669,
Y,8,8,.0,
NOTE, XXX TABLE 20: SEGMENT 26 (NODE 350) XXX
TBLE,20
X,1,1,.0,
Y,1,1,.0,
X,2,7,.0447,.0561,.1447,.1561,.2447,.2561,
Y,2,7,.0,1040.6,1040.6,-1040.6,-1040.6,.0,
X,8,8,.2669,
Y,8,8,.0,
NOTE, XXX TABLE 21: SEGMENT 25 (NODE 391) XXX
TBLE,21
X,1,1,.0,
Y,1,1,.0,
X,2,7,.0561,.0585,.1561,.1585,.2561,.2585,
Y,2,7,.0,221.4,221.4,-221.4,-221.4,.0,
X,8,8,.2669,
Y,8,8,.0,
NOTE, XXX TABLE 22: SEGMENT 24 (NODE 403) XXX
TBLE,22
X,1,1,.0,
Y,1,1,.0,
X,2,7,.0585,.0613,.1585,.1613,.2585,.2613,
Y,2,7,.0,259.3,259.3,-259.3,-259.3,.0,
X,8,8,.2669,
Y,8,8,.0,
NOTE, XXX TABLE 23: SEGMENT 21 (NODE 412) XXX
TBLE,23
X,1,1,.0,
Y,1,1,.0,
X,2,7,.0613,.0652,.1613,.1652,.2613,.2652,
Y,2,7,0,129.1,129.1,-129.1,-129.1,.0,
X,8,8,.2669,
Y,8,8,.0,
```

Altran Report
96227-TR-03 Rev. 1
Att./Appx. D Sh 321
Tran B

```
NOTE, XXX TABLE 24: SEGMENT 20 (NODE 415) XXX
TBLE,24
X,1,1,.0,
Y,1,1,.0,
X,2,7,.0652,.0660,.1652,.1660,.2652,.2660,
Y,2,7,.0,29.8,29.8,-29.8,-29.8,.0,
X,8,8,.2669,
Y,8,8,.0,
NOTE, XXX TABLE 25: SEGMENT 19 (NODE 427) XXX
TBLE,25
X,1,1,.0,
Y,1,1,.0,
X,2,7,.0660,.0669,.1660,.1669,.2660,.2669,
Y,2,7,.0,28.9,28.9,-28.9,-28.9,.0,
NOTE, XXX TABLE 26: SEGMENT 23 (NODE 440) XXX
TBLE,26
X,1,1,.0,
Y,1,1,.0,
X,2,7,.0615,.0622,.1615,.1622,.2615,.2622,
Y,2,7,.0,42.7,42.7,-42.7,-42.7,.0,
X,8,8,.2669,
Y,8,8,.0,
NOTE, XXX TABLE 27: SEGMENT 22 (NODE 447) XXX
TBLE,27
X,1,1,.0,
Y,1,1,.0,
X,2,7,.0622,.0631,.1622,.1631,.2622,.2631,
Y,2,7,.0,49.9,49.9,-49.9,-49.9,.0,
X,8,8,.2669,
Y,8,8,.0,
NOTE, XXX TABLE 28: SEGMENT 7 (NODE 265) XXX
TBLE,28
X,1,1,.0,
Y,1,1,.0,
X,2,7,.0142,.0147,.1142,.1147,.2142,.2147,
Y,2,7,.0,28.7,28.7,-28.7,-28.7,.0,
X,8,8,.2669,
Y,8,8,.0,
NOTE, XXX TABLE 29: SEGMENT  6 (NODE 268) XXX
TBLE,29
X,1,1,.0,
Y,1,1,.0,
X,2,7,.0147,.0159,.1147,.1159,.2147,.2159,
Y,2,7,.0,74.2,74.2,-74.2,-74.2,.0,
X,8,8,.2669,
Y,8,8,.0,
NOTE, XXX TABLE 30: SEGMENT 5 (NODE 272) XXX
TBLE,30
X,1,1,.0,
Y,1,1,.0,
X,2,7,.0159,.0168,.1159,.1168,.2159,.2168,
Y,2,7,.0,51.0,51.0,-51.0,-51.0,.0,
X,8,8,.2669,
Y,8,8,.0,
FF,1,130,0.707,0,0.707,
FF,2,113,0,1,0,
FF,3,95,0,0,1.,
```

Altran Report
96227-TR-03 Rev. 1
Att./Appx. D Sh D22
Tran B

```
FF,4,80,0,1,0,
FF,5,70,-1,0,0,
FF,6,50,0,0,1.,
FF,7,39,-0.7071,0,0.7071,
FF,8,32,0,1,0,
FF,9,27,0,1.,0,
FF,10,12,0.695,0,0.7193,
FF,11,205,0,-1,0,
FF,12,216,0,0,1.0,
FF,13,225,-1,0,0,
FF,14,243,-1,0,0,
FF,15,250,0,-1,0,
FF,16,253,0,0,-1.,
FF,17,257,0,-1,0,
FF,18,297,-0.7071,0,-0.7071,
FF,19,310,-1,0,0,
FF,20,350,0,-1,0,
FF,21,391,0,0,1.,
FF,22,403,-1,0,0,
FF,23,412,-1,0,0,
FF,24,415,0,0,1.,
FF,25,427,0,-1,0,
FF,26,440,0,0,1.,
FF,27,447,0,-1,0,
FF,28,265,0,-1,0,
FF,29,268,0,0,-1.,
FF,30,272,0,-1,0,
EN,,,.0000E+00,.0000E+00,.0000E+00,.0000E+00,.0000E+00,.0000E+00,
EXECUTION *** LOAD CASE COMBINATION DL+THLOOP/THLOCA (FILE 50, 51)
NE,2,,.1000E+02,.2000E+02,.0000E+00,.0000E+00,.0000E+00,.5000E+02,
NE,2,,.1000E+02,.2100E+02,.0000E+00,.0000E+00,.0000E+00,.5100E+02,
EN,,,.0000E+00,.0000E+00,.0000E+00,.0000E+00,.0000E+00,.0000E+00,
EXECUTION ***  LOAD COMBINATION OUTPUT: DL+THLOOP/THLOCA
OU,1,,.5000E+02,.0000E+00,.0000E+00,.0000E+00,.0000E+00,.0000E+00,
OU,2,,.5000E+02,.0000E+00,.0000E+00,.0000E+00,.0000E+00,.0000E+00,
OU,3,,.5000E+02,.0000E+00,.0000E+00,.0000E+00,.0000E+00,.0000E+00,
OU,1,,.5100E+02,.0000E+00,.0000E+00,.0000E+00,.0000E+00,.0000E+00,
OU,2,,.5100E+02,.0000E+00,.0000E+00,.0000E+00,.0000E+00,.0000E+00,
OU,3,,.5100E+02,.0000E+00,.0000E+00,.0000E+00,.0000E+00,.0000E+00,
EN,,,.0000E+00,.0000E+00,.0000E+00,.0000E+00,.0000E+00,.0000E+00,
EXECUTION *** EMERGENCY LOAD CASE COMBINATIONS FOR SUPPORT LOADS
NOTE          DL+TH NORM+WH COL CLOS (FILE 61)
NE,3,,.5000E+02,.4000E+02,.0000E+00,.0000E+00,.0000E+00,.6100E+02,
EN,,,.0000E+00,.0000E+00,.0000E+00,.0000E+00,.0000E+00,.0000E+00,
EXECUTION *** FAULTED LOAD CASE COMBINATIONS FOR SUPPORT LOADS
NOTE          DL+THLOCA+WH (FILE 62, 63)
NE,3,,.5100E+02,.3000E+02,.0000E+00,.0000E+00,.0000E+00,.6200E+02,
NE,3,,.5100E+02,.4000E+02,.0000E+00,.0000E+00,.0000E+00,.6300E+02,
EN,,,.0000E+00,.0000E+00,.0000E+00,.0000E+00,.0000E+00,.0000E+00,
EXECUTION ***  LOAD COMBINATION OUTPUT: DL+TH NORM+WH COL CLOS
OU,1,,.6100E+02,.0000E+00,.0000E+00,.0000E+00,.0000E+00,.0000E+00,
OU,2,,.6100E+02,.0000E+00,.0000E+00,.0000E+00,.0000E+00,.0000E+00,
OU,3,,.6100E+02,.0000E+00,.0000E+00,.0000E+00,.0000E+00,.0000E+00,
EN,,,.0000E+00,.0000E+00,.0000E+00,.0000E+00,.0000E+00,.0000E+00,
EXECUTION ***  LOAD COMBINATION OUTPUT: DL+TH LOCA+WH
OU,1,4,.6200E+02,.0000E+00,.0000E+00,.0000E+00,.0000E+00,.0000E+00,
OU,2,4,.6200E+02,.0000E+00,.0000E+00,.0000E+00,.0000E+00,.0000E+00,
```

Altran Report
96227-TR-03 Rev. 1
Att./Appx. D Sh D23
Tran B

```
OU,3,4,.6200E+02,.0000E+00,.0000E+00,.0000E+00,.0000E+00,.0000E+00,
OU,1,4,.6300E+02,.0000E+00,.0000E+00,.0000E+00,.0000E+00,.0000E+00,
OU,2,4,.6300E+02,.0000E+00,.0000E+00,.0000E+00,.0000E+00,.0000E+00,
OU,3,4,.6300E+02,.0000E+00,.0000E+00,.0000E+00,.0000E+00,.0000E+00,
EN,,,.0000E+00,.0000E+00,.0000E+00,.0000E+00,.0000E+00,.0000E+00,
EXECUTION *** NORMAL/UPSET CODE STRESS SUMMATIONS
XPRINT,25
EQ,8,,.1000E+02,.0000E+00,.0000E+00,.0000E+00,.0000E+00,.0000E+00,
EQ,9,,.1000E+02,.4000E+02,.0000E+00,.0000E+00,.0000E+00,.0000E+00,
EQ,10,,.0000E+00,.2000E+02,.0000E+00,.0000E+00,.0000E+00,.0000E+00,
EQ,10,,.0000E+00,.2100E+02,.0000E+00,.0000E+00,.0000E+00,.0000E+00,
EN,,,.0000E+00,.0000E+00,.0000E+00,.0000E+00,.0000E+00,.0000E+00,
EXECUTION *** FAULTED CODE STRESS SUMMATIONS
CLASS,,,2,1974,
XPRINT,25
EQ,9,,.1000E+02,.3000E+02,.0000E+00,.0000E+00,.0000E+00,.0000E+00,
EN,,,.0000E+00,.0000E+00,.0000E+00,.0000E+00,.0000E+00,.0000E+00,
```

Altran Report
96227-TR-03 Rev. 1
Att./Appx. D Sh D24
Train B

```
GEOMETRY, WOLFCREEK NUCLEAR OPERATING CORP.
GEOMETRY, PIPING ANA. CONTMT. AIRCOOLER "A" RETURN LINE
GEOMETRY, R013 SNUB IN @ NP1275;Wave=4135fps;Rise=100ms;Duration=200ms;P=225
ANCHOR,0,500,0,0,0,
NOTE,MODEL=acc41sni.adi
NOTE,LINE=acc41sni.adi
RESTRAINT,0,500,1,1,1,1,1,1,
NOTE, XXX "Dummy" Full Anchor @ Node 500 XXX
ANCHOR,0,2200,
RESTRAINT,0,2200,1,1,1,1,1,1,
NOTE, XXX NOZZLE AT CONTMT. COOLER SGNO1C XXX
ANCHOR,0,2850,
RESTRAINT,0,2850,1,1,1,1,1,1,
NOTE, XXX NOZZLE AT CONTMT. COOLER SGNO1A
ANCHOR,0,3050,
RESTRAINT,0,3050,1,1,1,1,1,1,
NOTE, XXX NOZZLE AT CONTMT. COOLER SGNO1A
ANCHOR,0,4050,
RESTRAINT,0,4050,1,1,1,1,1,1,
NOTE, XXX NOZZLE AT CONTMT. COOLER SGN01A
SE,,,.0000E+00,.0000E+00,.0000E+00,.0000E+00,.0000E+00,.0000E+00,
PIPE,500,800,1,.125,27.9,6.13,0,.05,
RUN,500,800,-7.547,0,6.561,
RUN,800,1000,-.0755,0,.0656,
SKEW,800,1000,-.656,0,-.755,
RIGID,800,1000,.5E8,.1E7,.5E8,.5E8,.1E10,.5E8,
NOTE, XXX PENETRATION P-73 AT NODE 1000 XXX
SE,,,.0000E+00,.0000E+00,.0000E+00,.0000E+00,.0000E+00,.0000E+00,
PIPE,1000,1010,14,.438,27.9,6.13,30,10.17,
RUN,1000,1010,-2.661,0,2.273,
RUN,1010,1020,-2.661,0,2.273,
RUN,1020,1030,-2.574,0,2.199,
RUN,1030,1040,-1.901,0,1.624,
ELBOW,1040,1050,,,,21,
RUN,1050,1060,0,2,0,
RUN,1060,1070,0,2.344,0,
WEIGHT,1060,1070,114,
VALVE,1070,1080,0,.151,0,14,1.311,.001,
SE,,,.0000E+00,.0000E+00,.0000E+00,.0000E+00,.0000E+00,.0000E+00,
VALVE,1080,1090,0,.151,0,
WEIGHT,1080,1090,114,
SE,,,.0000E+00,.0000E+00,.0000E+00,.0000E+00,.0000E+00,.0000E+00,
VALVE,1080,1100,2.61,0,0,
WEIGHT,1080,1100,925,
SE,,,.0000E+00,.0000E+00,.0000E+00,.0000E+00,.0000E+00,.0000E+00,
RUN,1090,1110,0,1,0,
CHANGE,1090,1110,14,.375,,,,10.07,
RUN,1110,1120,0,1.5,0,
RUN,1120,1130,0,3.021,0,
RUN,1130,1140,0,3,0,
ELBOW,1140,1150,,,,21,
RUN,1150,1160,0,0,2.25,
RUN,1160,1170,0,0,2.25,
RUN,1170,1180,0,0,2.25,
RUN,1180,1190,0,0,2.25,
RUN,1190,1200,0,0,1.833,
RIGID,1190,1200,344800,344800,0,
```

Altran Report
96227-TR-03 Rev. 1
AH/Appx D Sh D25

Column Closure
Event ("CC")
Train A

```
NOTE, XXX SUPPORT C005 XXX
SE,,,.0000E+00,.0000E+00,.0000E+00,.0000E+00,.0000E+00,.0000E+00,
RUN,1200,1210,0,0,3,
RUN,1210,1220,0,0,2.5,
RUN,1220,1230,0,0,2.5,
RUN,1230,1240,0,0,2.771,
ELBOW,1240,1250,,,,21,
RUN,1250,1270,2,0,0,
RUN,1270,1275,.917,
SNUB,1270,1275,,,277800,
NOTE, returned support R013 to model
RUN,1275,1280,.083,
RUN,1280,1290,2,0,0,
ELBOW,1290,1300,,,,21,
RUN,1300,1320,0,0,2.25,
RUN,1320,1330,0,0,2.25,
RUN,1330,1340,0,0,2.25,
RIGID,1330,1340,344800,344800,0,
NOTE, XXX SUPPORT C006 XXX
RUN,1340,1350,0,0,3,
RUN,1350,1360,0,0,3,
RUN,1360,1370,0,0,3,
RUN,1370,1380,0,0,3,
RIGID,1370,1380,0,344800,0,
NOTE, XXX SUPPORT H003 XXX
RUN,1380,1390,0,0,3,
RUN,1390,1400,0,0,3,
RUN,1400,1410,0,0,3,
RUN,1410,1420,0,0,3,
RIGID,1410,1420,344800,344800,0,
NOTE, XXX SUPPORT C007 XXX
SE,,,.0000E+00,.0000E+00,.0000E+00,.0000E+00,.0000E+00,.0000E+00,
RUN,1420,1430,0,0,2.615,
ELBOW,1430,1440,,,,21,
RUN,1440,1450,2.828,0,2.828,
RUN,1450,1455,2.45,0,2.45,
SKEW,1450,1455,.707,0,-.707,
RIGID,1450,1455,344800,
NOTE, XXX SUPPORT C008 XXX
RUN,1455,1460,.187,0,.187,
RIGID,1455,1460,0,344800,0,
NOTE, XXX SUPPORT C008 VERT. XXX
RUN,1460,1470,1.679,0,1.679,
RUN,1470,1480,2.121,0,2.121,
RUN,1480,1490,2.121,0,2.121,
ELBOW,1490,1500,,,,21,
RUN,1500,1510,0,2.5,0,
RUN,1510,1520,0,2.5,0,
RUN,1520,1530,0,2.333,0,
RUN,1530,1540,0,2.583,0,
RIGID,1530,1540,344800,344800,344800,
NOTE, XXX SUPPORT C017 XXX
RUN,1540,1550,0,2.917,0,
RUN,1550,1560,0,3,0,
RUN,1560,1570,0,3,0,
RIGID,1560,1570,344800,0,344800,
NOTE, XXX SUPPORT R004 XXX
```

Attach Report
96227-TR-03 Rev. 1
Att./Appx. D Sh D26
("CC")
Train A

```
SE,,,.0000E+00,.0000E+00,.0000E+00,.0000E+00,.0000E+00,.0000E+00,
RUN,1570,1580,0,2.5,0,
RUN,1580,1590,0,3,0,
RUN,1590,1600,0,3,0,
RUN,1600,1610,0,2.5,0,
RUN,1610,1620,0,2.5,0,
RUN,1620,1630,0,3,0,
RIGID,1620,1630,344800,0,344800,
NOTE, XXX SUPPORT R005 XXX
RUN,1630,1640,0,2,0,
RUN,1640,1650,0,2.75,0,
ELBOW,1650,1660,,,,21,
RUN,1660,1670,1.084,0,-2.766,
RUN,1670,1680,.963,0,-2.81,
RUN,1680,1690,.841,0,-2.849,
RUN,1690,1700,.717,0,-2.883,
RUN,1700,1710,.149,0,-.732,
RIGID,1700,1710,0,344800,0,
NOTE, XXX SUPPORT C019 XXX
RUN,1710,1715,.0314,0,-.164,
SKEW,1710,1715,.982,0,.188,,1,
SNUBBER,1710,1715,344800,
NOTE, XXX SUPPORT C019 SUNBBER PART XXX
RUN,1715,1720,.215,0,-1.12,
SE,,,.0000E+00,.0000E+00,.0000E+00,.0000E+00,.0000E+00,.0000E+00,
TEE,1720,1750,.155,0,-.903,
SE,,,.0000E+00,.0000E+00,.0000E+00,.0000E+00,.0000E+00,.0000E+00,
TEE,1750,1760,.155,0,-.903,
RDDUCER,1760,1765,.155,0,-1.072,10.75,.365,6.65,
RUN,1765,1770,.206,0,-1.423,
RUN,1770,1775,.246,0,-2.287,
RIGID,1770,1775,0,175400,0,
NOTE, XXX SUPPORT C018 XXX
RUN,1775,1780,.0236,0,-.22,
SKEW,1775,1780,.994,0,.107,,1,
SNUBBER,1775,1780,175400,
NOTE, XXX SUPPORT C018 SNUBBER PART XXX
RUN,1780,1790,.17,0,-2.411,
RUN,1790,1800,.085,0,-2.415,
ELBOW,1800,1810,,,,15,
RUN,1810,1820,-3.417,0,0,
RUN,1820,1830,-.938,0,0,
WEIGHT,1820,1830,54,
VALVE,1830,1840,-.156,0,0,10.75,1.095,.001,
SE,,,.0000E+00,.0000E+00,.0000E+00,.0000E+00,.0000E+00,.0000E+00,
VALVE,1840,1850,-.156,0,0,
WEIGHT,1840,1850,54,
SE,,,.0000E+00,.0000E+00,.0000E+00,.0000E+00,.0000E+00,.0000E+00,
VALVE,1840,1860,0,0,.333,
WEIGHT,1840,1860,225,
SE,,,.0000E+00,.0000E+00,.0000E+00,.0000E+00,.0000E+00,.0000E+00,
RUN,1850,1870,-1.5,0,0,
CHANGE,1850,1870,10.75,.365,,,,6.65,
RUN,1870,1880,-1.5,0,0,
TEE,1880,1890,-1.385,0,0,
SE,,,.0000E+00,.0000E+00,.0000E+00,.0000E+00,.0000E+00,.0000E+00,
TEE,1890,1900,-.802,0,0,
```

Altran Report
96227-TR-03 Rev. 1
Att./Appx. D Sh D27

("cc")
Train A

```
RIGID,1890,1900,0,175400,0,
NOTE, XXX SUPPORT H005 XXX
RUN,1900,1910,-1.448,0,0,
SE,,,.0000E+00,.0000E+00,.0000E+00,.0000E+00,.0000E+00,.0000E+00,
RDDUCER,1910,1920,-.583,0,0,8.625,.322,4.54,
RUN,1920,1930,-1.719,0,0,
RUN,1930,1940,-1.5,0,0,
RUN,1940,1950,-1.5,0,0,
ELBOW,1950,1960,,,,12,
RUN,1960,1970,0,1.5,0,
RUN,1970,1980,0,1,0,
RIGID,1970,1980,106400,0.0,
NOTE, XXX SUPPORT R010 XXX
SE,,,.0000E+00,.0000E+00,.0000E+00,.0000E+00,.0000E+00,.0000E+00,
RUN,1980,1985,0,.167,0,
SNUBBER,1980,1985,0,0,106400,
NOTE, XXX SUPPORT R010 SNUBBER PART XXX
RUN,1985,1990,0,1.333,0,
RUN,1990,2000,0,2,0,
ELBOW,2000,2010,,,,12,
RUN,2010,2020,0,0,-2.333,
RUN,2020,2030,0,0,-2.5,
RUN,2030,2040,0,0,-2.5,
RIGID,2030,2040,106400,106400,0,
NOTE, XXX SUPPORT C015 XXX
RUN,2040,2050,0,0,-2.5,
RUN,2050,2060,0,0,-2.5,
RUN,2060,2070,0,0,-2.5,
SNUBBER,2060,2070,106400,106400,
NOTE, XXX SUPPORT R012 SNUBBER PART XXX
RUN,2070,2080,0,0,-1.797,
RUN,2080,2090,0,0,-2,
ELBOW,2090,2100,,,,12,
RUN,2100,2110,1.75,0,0,
SNUBBER,2100,2110,0,0,106400,
NOTE, XXX SUPPORT R011 XXX
RUN,2110,2120,.75,0,0,
RUN,2120,2130,1.443,0,0,
ELBOW,2130,2140,,,,12,
RUN,2140,2150,0,1.5,0,
RUN,2150,2160,0,1.313,0,
RUN,2160,2200,0,1.5,0,
SE,,,.0000E+00,.0000E+00,.0000E+00,.0000E+00,.0000E+00,.0000E+00,
TEE,1750,2500,-.831,0,-.143,
CHANGE,1750,2500,10.75,.365,,,,6.65,
RUN,2500,2510,-1.323,0,0,
WEIGHT,2500,2510,54,
VALVE,2510,2520,-.156,0,0,10.75,1.095,.001,
SE,,,.0000E+00,.0000E+00,.0000E+00,.0000E+00,.0000E+00,.0000E+00,
VALVE,2520,2530,-.156,0,0,
WEIGHT,2520,2530,54,
SE,,,.0000E+00,.0000E+00,.0000E+00,.0000E+00,.0000E+00,.0000E+00,
VALVE,2520,2540,0,0,.333,
WEIGHT,2520,2540,225,
SE,,,.0000E+00,.0000E+00,.0000E+00,.0000E+00,.0000E+00,.0000E+00,
RUN,2530,2550,-1.5,0,0,
CHANGE,2530,2550,10.75,.365,,,,6.65,
```

Altran Report
96227-TR-03 Rev. 1
Att./Appx. D Sh D28

("cc")
Train A

Altran Report
96227-TR-03 Rev. 1
Att./Appx. D Sh D29

("CC")
Train A

```
RUN,2550,2560,-2,0,0,
RUN,2560,2570,-2.12,0,0,
RIGID,2560,2570,0,175400,0,
NOTE, XXX SUPPORT H006 XXX
RUN,2570,2580,-1.5,0,0,
ELBOW,2580,2590,,,,15,
RUN,2590,2600,0,2,0,
RUN,2600,2610,0,1.833,0,
RIGID,2600,2610,175400,0,0,
NOTE, XXX SUPPORT R014 XXX
RUN,2610,2615,0,.167,0,
SNUBBER,2610,2615,0,0,175400,
NOTE, XXX SUPPORT R014 PART XXX
SE,,,.0000E+00,.0000E+00,.0000E+00,.0000E+00,.0000E+00,.0000E+00,
RUN,2615,2620,0,2.083,0,
ELBOW,2620,2630,,,,15,
RUN,2630,2640,0,0,2,
RUN,2640,2650,0,0,2,
RUN,2650,2660,0,0,2,
RUN,2660,2670,0,0,1.292,
TEE,2670,2680,0,0,.708,
SE,,,.0000E+00,.0000E+00,.0000E+00,.0000E+00,.0000E+00,.0000E+00,
TEE,2680,2690,0,0,.708,
SE,,,.0000E+00,.0000E+00,.0000E+00,.0000E+00,.0000E+00,.0000E+00,
RDDUCER,2690,2700,0,0,.583,6.625,.28,2.81,
RUN,2700,2710,0,0,1,
RUN,2710,2720,0,0,1.49,
RIGID,2710,2720,59520,0,0,
NOTE, XXX SUPPORT R009 XXX
RUN,2720,2730,0,0,1.5,
RUN,2730,2740,0,0,1.5,
RIGID,2730,2740,0,119000,0,
NOTE, XXX SUPPORT H007 XXX
RUN,2740,2750,0,0,1.135,
RUN,2750,2760,0,0,2,
RUN,2760,2770,0,0,2,
RUN,2770,2780,0,0,2,
RUN,2780,2790,0,0,2,
ELBOW,2790,2800,,,,9,
RUN,2800,2810,.707,.707,0,
RUN,2810,2820,.692,.692,0,
ELBOW,2820,2830,,,,9,
RUN,2830,2840,0,1.5,0,
RUN,2840,2850,0,1.286,0,
SE,,,.0000E+00,.0000E+00,.0000E+00,.0000E+00,.0000E+00,.0000E+00,
TEE,2680,3000,.471,.471,0,
CHANGE,2680,3000,8.625,.322,,,,4.54,
RUN,3000,3010,.471,.471,0,
ELBOW,3010,3020,,,,12,
RUN,3020,3030,0,1.463,0,
RUN,3030,3040,0,1,0,
RUN,3040,3050,0,1,0,
SE,,,.0000E+00,.0000E+00,.0000E+00,.0000E+00,.0000E+00,.0000E+00,
TEE,1890,4000,,,-3.146,
CHANGE,1890,4000,6.625,.28,,,,2.81,
ELBOW,4000,4010,,,,9,
RUN,4010,4020,,3.5,
```

```
RUN,4020,4030,,3.5,
RUN,4030,4050,,3.313,
EN,,,.0000E+00,.0000E+00,.0000E+00,.0000E+00,.0000E+00,.0000E+00
EXECUTION XXX DEADWEIGHT ANALYSIS XXX
CLASS,,,2,1974,
CONDITION,2,1,10,200,200,15000,15000,1,
MATERIAL,,,,,,,,27.9,
XPRINT,20,-27,-29,
DEADWEIGHT,,,,-1.0,
EN,,,.0000E+00,.0000E+00,.0000E+00,.0000E+00,.0000E+00,.0000E+00,
EXECUTION XXX THERMAL ANALYSIS NORM. OPER. XXX
CLASS,,,2,1974,
CONDITION,2,,20,,,15000,15000,1,
MATERIAL,,,,,,,,27.9,
TH,,,.0000E+00,.0000E+00,.0000E+00,.0000E+00,.0000E+00,.0000E+00,
EN,,,.0000E+00,.0000E+00,.0000E+00,.0000E+00,.0000E+00,.0000E+00,
EXECUTION XXX THERMAL ACCIDENT TEMP. 244 DEG. XXX
OPTION,,,,,,,2.0,
CLASS,,,2,1974,
CONDITION,2,,21,,,15000,15000,1,
MATERIAL,,,,,,,,27.9,
TH,,,.0000E+00,.0000E+00,.0000E+00,.0000E+00,.0000E+00,.0000E+00,
CHANGE,1000,1010,,,,6.477,174,,
EN,,,.0000E+00,.0000E+00,.0000E+00,.0000E+00,.0000E+00,.0000E+00,
EXECUTION XXX COLUMN CLOSURE WATERHAMMER LOAD CASE XXX
OPTION,,,,,,,2.0,0,
CLASS,,,2,1974,
CONDITION,2,,30,,,15000,15000,1,
MATERIAL,,,,,,,,27.9,
VIBRATION,1,,.0,.001,0.2277,.02,150,
SB,,,.0000E+00,.0000E+00,.0000E+00,.0000E+00,.0000E+00,.0000E+00,
XPRINT,20,-27,-29,
NOTE, XXX TABLE 1: SEGMENT 3 (NODE 1030) XXX
TBLE,1
X,1,1,.0,
Y,1,1,.0,
X,2,7,.0221,.0277,.1221,.1277,.2221,.2277,
Y,2,7,0.0,1717.6,1717.6,-1717.6,-1717.6,0.,
X,8,8,.2277,
Y,8,8,0.0,
NOTE, XXX TABLE 2: SEGMENT 2 (NODE 1060) XXX
TBLE,2
X,1,1,.0,
Y,1,1,.0,
X,2,7,.0190,.0221,.1190,.1221,.2190,.2221,
Y,2,7,.0,988.2,988.2,-988.2,-988.2,0.0,
X,8,8,.2277,
Y,8,8,.0,
NOTE, XXX TABLE 3: SEGMENT 1 (NODE 1160) XXX
TBLE,3
X,1,1,.0,
Y,1,1,.0,
X,2,7,.0137,.0190,.1137,.1190,.2137,.2190,
Y,2,7,0.0,1620.8,1620.8,-1620.8,-1620.8,0.0,
X,8,8,.2277,
Y,8,8,.0,
NOTE, XXX TABLE 5: SEGMENT 5 (NODE 1270) XXX
```

Altran Report
96227-TR-03 Rev. 1
Att./Appx. D Sh D30

("CC")
Train A

```
TBLE,5
X,1,1,.0,
Y,1,1,.0,
X,2,7,.0125,.0137,.1125,.1137,.2125,.2137,
Y,2,7,.0,375.2,375.2,-375.2,-375.2,0.0,
X,8,8,.2277,
Y,8,8,0.0,
NOTE, XXX TABLE 6: SEGMENT 6 (NODE 1320) XXX
TBLE,6
X,1,1,.0,
Y,1,1,.0,
X,2,7,.0045,.0125,.1045,.1125,.2045,.2125,
Y,2,7,.0,2504.0,2504.0,-2504.0,-2504.0,.0,
X,8,8,.2277,
Y,8,8,.0,
NOTE, XXX TABLE 7: SEGMENT 7 (NODE 1450) XXX
TBLE,7
X,1,1,0,
Y,1,1,.0,
X,2,7,.0045,.1000,.1045,.2000,.2045,.2277,
Y,2,7,1383.7,1383.7,-1383.7,-1383.7,.0,.0,
NOTE, XXX TABLE 8: SEGMENT 8 (NODE 1530) XXX
TBLE,8
X,1,1,0,
Y,1,1,.0,
X,2,7,.0097,.1000,.1097,.2000,.2097,.2277,
Y,2,7,3007.5,3007.5,-3007.5,-3007.5,0.0,0.0,
NOTE, XXX TABLE 9: SEGMENT 9 (NODE 1690) XXX
TBLE,9
X,1,1,0,
Y,1,1,.0,
X,2,7,.0097,.0133,.1097,.1133,.2097,.2133,
Y,2,7,0.0,1114.3,1114.3,-1114.3,-1114.3,0.0,
X,8,8,.2277,
Y,8,8,.0,
NOTE, XXX TABLE 10: SEGMENT 10 (NODE 1760) XXX
TBLE,10
X,1,1,0,
Y,1,1,.0,
X,2,7,.0133,.0138,.1133,.1138,.2133,.2138,
Y,2,7,0.0,116.8,116.8,-116.8,-116.8,.0,
X,8,8,.2277,
Y,8,8,.0,
NOTE, XXX TABLE 11: SEGMENT 11 (NODE 1770) XXX
TBLE,11
X,1,1,0,
Y,1,1,.0,
X,2,7,.0138,.0155,.1138,.1155,.2138,.2155,
Y,2,7,0.0,309.8,309.8,-309.8,-309.8,.0,
X,8,8,.2277,
Y,8,8,.0,
NOTE, XXX TABLE 12: SEGMENT 12 (NODE 1820)
TBLE,12
X,1,1,0,
Y,1,1,.0,
X,2,7,.0155,.0181,.1155,.1181,.2155,.2181,
Y,2,7,.0,459.0,459.0,-459.0,-459.0,.0,
```

Attach Report
96227-TR-03 Rev. 1
Att./Appx. D Sh D31
("cc")
Trans A

```
X,8,8,.2277,
Y,8,8,.0,
NOTE, XXX TABLE 13: SEGMENT 13 (NODE 1940) XXX
TBLE,13
X,1,1,0,
Y,1,1,.0,
X,2,7,.0181,.0194,.1181,.1194,.2181,.2194,
Y,2,7,.0,135.5,135.5,-135.5,-135.5,.0,
X,8,8,.2277,
Y,8,8,.0,
NOTE, XXX TABLE 14: SEGMENT 14 (NODE 1990) XXX
TBLE,14
X,1,1,0,
Y,1,1,.0,
X,2,7,.0194,.0209,.1194,.1209,.2194,.2209,
Y,2,7,0.0,153.4,153.4,-153.4,-153.4,0.0,
X,8,8,.2277,
Y,8,8,.0,
NOTE, XXX TABLE 15: SEGMENT 15 (NODE 2050) XXX
TBLE,15
X,1,1,0,
Y,1,1,.0,
X,2,7,.0209,.0254,.1209,.1254,.2209,.2254,
Y,2,7,0.0,476.5,476.5,-476.5,-476.5,0.0,
X,8,8,.2277,
Y,8,8,.0,
NOTE, XXX TABLE 16: SEGMENT 16 (NODE 2120) XXX
TBLE,16
X,1,1,0,
Y,1,1,.0,
X,2,7,.0254,.0263,.1254,.1263,.2254,.2263,
Y,2,7,0.0,100.8,100.8,-100.8,-100.8,0.0,
X,8,8,.2277,
Y,8,8,.0,
NOTE, XXX TABLE 17: SEGMENT 17 (NODE 2150) XXX
TBLE,17
X,1,1,0,
Y,1,1,.0,
X,2,7,.0263,.0274,.1263,.1274,.2263,.2274,
Y,2,7,0.0,110.2,110.2,-110.2,-110.2,0.0,
X,8,8,.2277,
Y,8,8,.0,
NOTE, XXX TABLE 18: SEGMENT 18 ( NODE 2560) XXX
TBLE,18
X,1,1,0,
Y,1,1,.0,
X,2,7,.0133,.0156,.1133,.1156,.2133,.2156,
Y,2,7,0.0,320.7,320.7,-320.7,-320.7,0.0,
X,8,8,.2277,
Y,8,8,0.0,
NOTE, XXX TABLE 19: SEGMENT 19 (NODE 2600) XXX
TBLE,19
X,1,1,0,
Y,1,1,.0,
X,2,7,.0156,.0171,.1156,.1171,.2156,.2171,
Y,2,7,0.0,203.1,203.1,-203.1,-203.1,0.0,
X,8,8,.2277,
```

Altran Report
96227-SR-03 Rev. 1
Att./Appx. D Sh D32

("CC")
Train A

```
Y,8,8,0.0,
NOTE, XXX TABLE 20: SEGMENT 20 (NODE 2650) XXX
TBLE,20
X,1,1,0,
Y,1,1,.0,
X,2,7,.0171,.0193,.1171,.1193,.2171,.2193,
Y,2,7,0.0,300.6,300.6,-300.6,-300.6,0.0,
X,8,8,.2277,
Y,8,8,0.0,
NOTE, XXX TABLE 21: SEGMENT 21 (NODE 2710) XXX
TBLE,21
X,1,1,0,
Y,1,1,.0,
X,2,7,.0193,.0229,.1193,.1229,.2193,.2229,
Y,2,7,0.0,182.5,182.5,-182.5,-182.5,0.0,
X,8,8,.2277,
Y,8,8,0.0,
NOTE, XXX TABLE 22: SEGMENT 22 (NODE 2810) XXX
TBLE,22
X,1,1,0,
Y,1,1,.0,
X,2,7,.0229,.0233,.1229,.1233,.2229,.2233,
Y,2,7,0.0,24.5,24.5,-24.5,-24.5,0.0,
X,8,8,.2277,
Y,8,8,0.0,
NOTE, XXX TABLE 23: SEGMENT 23 (NODE 2840) XXX
TBLE,23
X,1,1,0,
Y,1,1,.0,
X,2,7,.0233,.0240,.1233,.1240,.2233,.2240,
Y,2,7,0.0,34.1,34.1,-34.1,-34.1,0.0,
X,8,8,.2277,
Y,8,8,0.0,
NOTE, XXX TABLE 24: SEGMENT 24 (NODE 3010) XXX
TBLE,24
X,1,1,0,
Y,1,1,.0,
X,2,7,.0193,.0195,.1193,.1195,.2193,.2195,
Y,2,7,0.0,22.9,22.9,-22.9,-22.9,0.0,
X,8,8,.2277,
Y,8,8,0.0,
NOTE, XXX TABLE 25: SEGMENT 25 (NODE 3030) XXX
TBLE,25
X,1,1,0,
Y,1,1,.0,
X,2,7,.0195,.0204,.1195,.1204,.2195,.2204,
Y,2,7,0.0,73.2,73.2,-73.2,-73.2,0.0,
X,8,8,.2277,
Y,8,8,0.0,
NOTE, XXX TABLE 26: SEGMENT 26 (NODE 4000) XXX
TBLE,26
X,1,1,0,
Y,1,1,.0,
X,2,7,.0181,.0184,.1181,.1184,.2181,.2184,
Y,2,7,0.0,13.5,13.5,-13.5,-13.5,0.0,
X,8,8,.2277,
Y,8,8,0.0,
```

Altran Report
96227-TR-03 Rev. 1
Att./Appx. D Sh D33
("CC")
Train A

```
NOTE, XXX TABLE 27: SEGMENT 27 (NODE 4030) XXX
TBLE,27
X,1,1,0,
Y,1,1,.0,
X,2,7,.0184,.0209,.1184,.1209,.2184,.2209,
Y,2,7,0.0,124.5,124.5,-124.5,-124.5,0.0,
X,8,8,.2277,
Y,8,8,0.0,
INERTIA,,1030,.1,.1,.1,
INERTIA,,1040,.1,.1,.1,
INERTIA,,1060,.1,.1,.1,
INERTIA,,1100,.1,.1,.1,
INERTIA,,1120,.1,.1,.1,
INERTIA,,1130,.1,.1,.1,
INERTIA,,1150,.1,.1,.1,
INERTIA,,1160,.1,.1,.1,
INERTIA,,1170,.1,.1,.1,
INERTIA,,1190,.1,.1,.1,
INERTIA,,1210,.1,.1,.1,
INERTIA,,1230,.1,.1,.1,
INERTIA,,1250,.1,.1,.1,
INERTIA,,1270,.1,.1,.1,
INERTIA,,1280,.1,.1,.1,
INERTIA,,1300,.1,.1,.1,
INERTIA,,1320,.1,.1,.1,
INERTIA,,1330,.1,.1,.1,
INERTIA,,1350,.1,.1,.1,
INERTIA,,1360,.1,.1,.1,
INERTIA,,1370,.1,.1,.1,
INERTIA,,1390,.1,.1,.1,
INERTIA,,1400,.1,.1,.1,
INERTIA,,1410,.1,.1,.1,
INERTIA,,1430,.1,.1,.1,
INERTIA,,1450,.1,.1,.1,
INERTIA,,1480,.1,.1,.1,
INERTIA,,1500,.1,.1,.1,
INERTIA,,1520,.1,.1,.1,
INERTIA,,1530,.1,.1,.1,
INERTIA,,1550,.1,.1,.1,
INERTIA,,1560,.1,.1,.1,
INERTIA,,1580,.1,.1,.1,
INERTIA,,1600,.1,.1,.1,
INERTIA,,1620,.1,.1,.1,
INERTIA,,1690,.1,.1,.1,
INERTIA,,1700,.1,.1,.1,
INERTIA,,1720,.1,.1,.1,
INERTIA,,1760,.1,.1,.1,
INERTIA,,1770,.1,.1,.1,
INERTIA,,1790,.1,.1,.1,
INERTIA,,1800,.1,.1,.1,
INERTIA,,1820,.1,.1,.1,
INERTIA,,1860,.1,.1,.1,
INERTIA,,1880,.1,.1,.1,
INERTIA,,1910,.1,.1,.1,
INERTIA,,1930,.1,.1,.1,
INERTIA,,1940,.1,.1,.1,
INERTIA,,1950,.1,.1,.1,
```

Altran Report
96227-AR-03 Rev. 1
Att./Appx. D Sh D34

("CC")
Train A

```
INERTIA,,1970,.1,.1,.1,
INERTIA,,1990,.1,.1,.1,
INERTIA,,2000,.1,.1,.1,
INERTIA,,2020,.1,.1,.1,
INERTIA,,2050,.1,.1,.1,
INERTIA,,2060,.1,.1,.1,
INERTIA,,2080,.1,.1,.1,
INERTIA,,2090,.1,.1,.1,
INERTIA,,2120,.1,.1,.1,
INERTIA,,2140,.1,.1,.1,
INERTIA,,2150,.1,.1,.1,
INERTIA,,2200,.1,.1,.1,
INERTIA,,2510,.1,.1,.1,
INERTIA,,2540,.1,.1,.1,
INERTIA,,2560,.1,.1,.1,
INERTIA,,2580,.1,.1,.1,
INERTIA,,2590,.1,.1,.1,
INERTIA,,2600,.1,.1,.1,
INERTIA,,2620,.1,.1,.1,
INERTIA,,2640,.1,.1,.1,
INERTIA,,2650,.1,.1,.1,
INERTIA,,2660,.1,.1,.1,
INERTIA,,2680,.1,.1,.1,
INERTIA,,2710,.1,.1,.1,
INERTIA,,2730,.1,.1,.1,
INERTIA,,2760,.1,.1,.1,
INERTIA,,2780,.1,.1,.1,
INERTIA,,2810,.1,.1,.1,
INERTIA,,2840,.1,.1,.1,
INERTIA,,3010,.1,.1,.1,
INERTIA,,3030,.1,.1,.1,
INERTIA,,3040,.1,.1,.1,
INERTIA,,4000,.1,.1,.1,
INERTIA,,4030,.1,.1,.1,
NOTE, XXX TABLE OF FORCING FUNCTIONS XXX
FF,1,1160,0,0,1.0,
FF,2,1060,0,1.0,0,
FF,3,1030,-0.761,0,.649,
FF,5,1270,1.0,0,0,
FF,6,1320,0,0,1.0,
FF,7,1450,0.7071,0,0.7071,
FF,8,1530,0,-1.0,0,
FF,9,1690,-0.2756,0,0.9613,
FF,10,1760,-0.276,0,0.961,
FF,11,1770,-0.2756,0,0.9613,
FF,12,1820,1.0,0,0,
FF,13,1940,1.0,0,0,
FF,14,1990,0,-1.0,0,
FF,15,2050,0,0,1.0,
FF,16,2120,-1.0,0,0,
FF,17,2150,0,-1.0,0,
FF,18,2560,1.0,0,0,
FF,19,2600,0,-1.0,0,
FF,20,2650,0,0,-1.0,
FF,21,2710,0,0,-1.0,
FF,22,2810,-0.7071,-0.7071,0,
FF,23,2840,0,-1.0,0,
```

Altran Report
96227-TR-03 Rev. 1
Att./Appx. D Sh 235

("CC")
Tram A

Altran Report
96227-TR-03 Rev. 1
Att./Appx. D Sh D36

("CC")
Train A

```
FF,24,3010,-0.7071,-0.7071,0,
FF,25,3030,0,-1.0,0,
FF,26,4000,0,0,1.0,
FF,27,4030,0,-1.0,0,
EN,,,.0000E+00,.0000E+00,.0000E+00,.0000E+00,.0000E+00,.0000E+00,
EXECUTION   **  LOAD CASE SUMMATIONS  **
NE,2,,.1000E+02,.2000E+02,.0000E+00,.0000E+00,.0000E+00,.4000E+02,
NE,2,,.1000E+02,.2100E+02,.0000E+00,.0000E+00,.0000E+00,.4100E+02,
EN,,,.0000E+00,.0000E+00,.0000E+00,.0000E+00,.0000E+00,.0000E+00,
EXECUTION   **  LOAD CASE SUMMATIONS DL + TH; DL + TH2 **
OU,1,,.4000E+02,.0000E+00,.0000E+00,.0000E+00,.0000E+00,.0000E+00,
OU,2,,.4000E+02,.0000E+00,.0000E+00,.0000E+00,.0000E+00,.0000E+00,
OU,3,,.4000E+02,.0000E+00,.0000E+00,.0000E+00,.0000E+00,.0000E+00,
OU,1,,.4100E+02,.0000E+00,.0000E+00,.0000E+00,.0000E+00,.0000E+00,
OU,2,,.4100E+02,.0000E+00,.0000E+00,.0000E+00,.0000E+00,.0000E+00,
OU,3,,.4100E+02,.0000E+00,.0000E+00,.0000E+00,.0000E+00,.0000E+00,
EN,,,.0000E+00,.0000E+00,.0000E+00,.0000E+00,.0000E+00,.0000E+00,
EXECUTION   ** LOAD CASE SUMMATIONS  **
NE,3,,.3000E+02,.4000E+02,.0000E+00,.0000E+00,.0000E+00,.5000E+02,
NE,3,,.3000E+02,.4100E+02,.0000E+00,.0000E+00,.0000E+00,.5100E+02,
EN,,,.0000E+00,.0000E+00,.0000E+00,.0000E+00,.0000E+00,.0000E+00,
EXECUTION   **  LOAD CASE SUMMATIONS DL + TH2 + WH **
OU,1,4,.5100E+02,.0000E+00,.0000E+00,.0000E+00,.0000E+00,.0000E+00,
OU,2,4,.5100E+02,.0000E+00,.0000E+00,.0000E+00,.0000E+00,.0000E+00,
OU,3,4,.5100E+02,.0000E+00,.0000E+00,.0000E+00,.0000E+00,.0000E+00,
EN,,,.0000E+00,.0000E+00,.0000E+00,.0000E+00,.0000E+00,.0000E+00,
EXECUTION   ** CODE STRESS SUMMATIONS  **
EQ,8,,.1000E+02,.0000E+00,.0000E+00,.0000E+00,.0000E+00,.0000E+00,
EQ,9,,.1000E+02,.3000E+02,.0000E+00,.0000E+00,.0000E+00,.0000E+00,
EQ,10,,.0000E+00,.2000E+02,.0000E+00,.0000E+00,.0000E+00,.0000E+00,
EQ,10,,.0000E+00,.2100E+02,.0000E+00,.0000E+00,.0000E+00,.0000E+00,
EN,,,.0000E+00,.0000E+00,.0000E+00,.0000E+00,.0000E+00,.0000E+00,
```

ATTACHMENT E

PIPING DRAWINGS

M-15GNOI (Q)

VALVE INFORMATION TABLE

VALVE NO.	CENTER OF GRAVITY LOC. FOR VALVE & OPERATOR X	Y	Z	VALVE WEIGHT	VENDOR PRINT NO.	VALVE IDENT.	RQ. ITEM NO.	
EFHV55	[illegible]	[illegible]	[illegible]	[illegible]	M-557-060	BECHTEL	2 DIA	HOLD
EFHV65	[illegible]	[illegible]	[illegible]	[illegible]	M-557-065	BECHTEL	2 DIA	HOLD
V 901	[illegible]	[illegible]	[illegible]	[illegible]	M-554-067	BECHTEL	LOS	
V 906	[illegible]	[illegible]	[illegible]	[illegible]	M-630-063	BECHTEL	LOS	
V059	[illegible]	[illegible]	[illegible]	[illegible]	M-558-060	BECHTEL	LOS	
V061	[illegible]	[illegible]	[illegible]	[illegible]	M-558-061	BECHTEL	LOS	HOLD

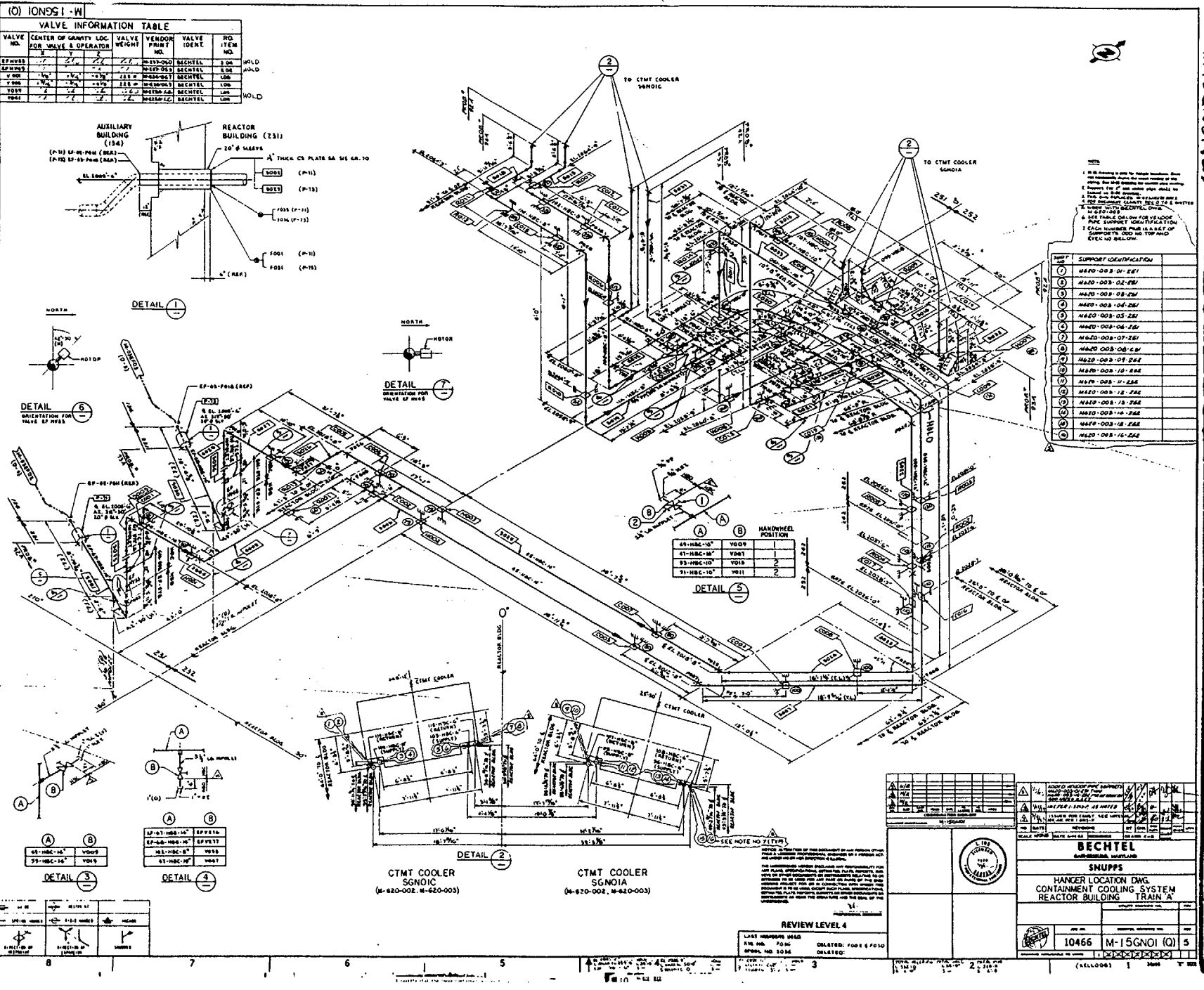

M-15GN02 (Q) (UNIT 1 ONLY) M-15GN02 (Q)

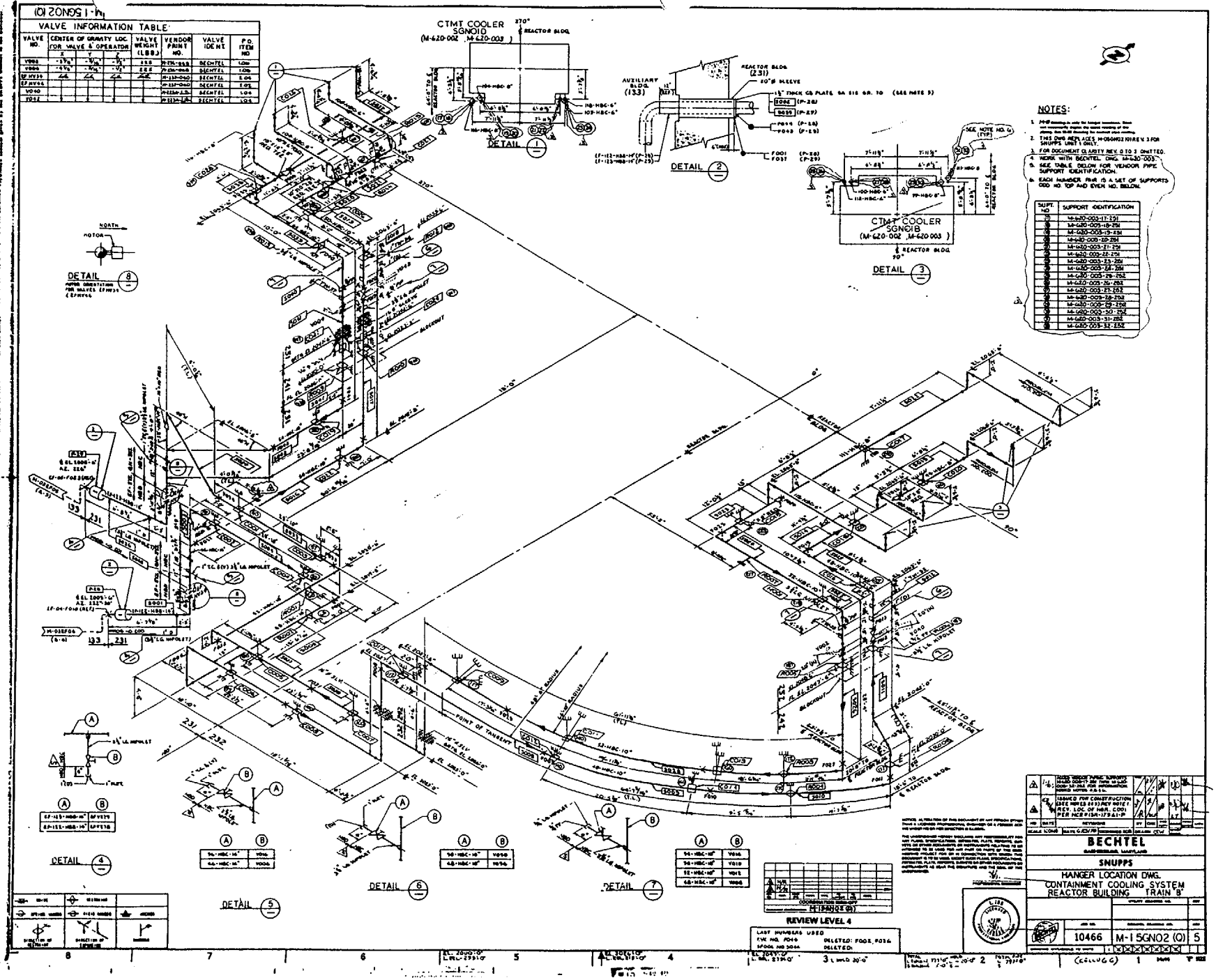

ATTACHMENT F

TRAIN A AND TRAIN B SUPPLY LINE COMPARISONS TO THE RETURN LINE

A. Comparison of Supply Line to Return Line for Train "A" and Train "B".

Comparisons of the Supply line to the Return line for Train "A" and Train "B" were made in several areas: piping arrangement, pipe sizes, pipe support type, pipe support evaluation and the magnitude of the waterhammer differential pressure pulse.

1. Piping Arrangement, Pipe Sizes, Pipe Supports

   The overall piping geometry of the Supply line and Return line are very similar. Tables F-1.0 and F-2.0 summarize the similarities between the lines. The lines run parallel to each for most of the distance from the Containment Coolers to the Reactor Building (R.B.) Penetrations. Reviewing the piping, there are some minor geometry differences in the vicinity of the Containment Cooler SGN01A which are considered insignificant.

   The pipe sizes and pipe material for the Supply line and Return line are the same. The nominal pipe sizes range from 6" to 14" pipe with a standard wall thickness, except in the vicinity of the R.B. penetrations where it is 14" Schedule 40. The pipe material is SA106 Grade B. The pipe sizes, wall thickness and material are summarized in Table F-3.0.

   The pipe support evaluations for Train "A" and "B" Return lines were found acceptable. The evaluations are summarized in Attachment B. With the similarity between the piping and minor differences in the pipe supports, Train "A" and "B" Supply lines are acceptable

2. Peak Differential Pressure Pulses

   There is no pressure pulse created on the Supply lines for Train "A" and Train "B" for the Column Closure event or the Condensation Induced event based on Altran Report 96227-TR-01 [12].

Table F-1.0 Train "A" Comparison of Supply and Return Line

Pipe Section	Pipe Section Description	Line Function	Line Size	Orientation (Length)	Pipe Supports	Comments
AA	Penet P-71 to Elbow Penet P-73 to Elbow	Supply Return	67-HBB-14" 68-HBB-14"	Horizontal (11.4') Horizontal (12.9')	None None	
AB	Elbow to Elbow Elbow to Elbow	Supply Return	67-HBB-14"/45-HBC-14" 68-HBB-14"/55-HBC-14"	Vertical (13.2') Vertical (13.2')	None None	
AC	Elbow to Elbow Elbow to Elbow	Supply Return	45-HBC-14" 55-HBC-14"	Horizontal (29.8') Horizontal (21.6')	C001 (X,Y), H001 (Y) C005 (X,Y)	Additional support will decrease stresses
AD	Elbow to Elbow Elbow to Elbow	Supply Return	45-HBC-14" 55-HBC-14"	Horizontal (6.8') Horizontal (5.0')	R001 (Z) R013 (SNUB Z)	
AE	Elbow to Elbow Elbow to Elbow	Supply Return	45-HBC-14" 55-HBC-14"	Horizontal (32.1') Horizontal (33.4')	C002 (X,Y),H002 (Y), C003 (X,Y) C006 (X,Y),H003 (Y), C007 (X,Y)	
AF	Elbow to Elbow Elbow to Elbow	Supply Return	45-HBC-14" 55-HBC-14"	Horizontal (18.4') Horizontal (16.1')	C004 (LAT, Y) C008 (LAT, Y)	
AG	Elbow to Elbow Elbow to Elbow	Supply Return	45-HBC-14" 55-HBC-14"	Vertical (42.0') Vertical (40.1')	C016 (X,Y,Z), R002 (X,Z), R003 (X, Z) C017 (X,Y,Z), R004 (X,Z), R005 (X,Z)	
AH	Elbow to First Tee Elbow to First Tee	Supply Return	45-HBC-14" 55-HBC-14"	Horizontal (15.1') Horizontal (14.9')	C009 (X, Y) C019 (SNUB LAT, Y)	

Pipe Section	Pipe Section Description	Line Function	Line Size	Orientation (Length)	Pipe Supports	Comments
AI	First Tee Branch to Elbow First Tee Branch to Elbow	Supply Return	47-HBC-10" 51-HBC-10"	Horizontal (7.9') Horizontal (9.8')	C013 (Y, Z) H006 (Y)	Additional restraint will decrease stresses on Supply line
AJ	Elbow to Elbow Elbow to Elbow	Supply Return	47-HBC-10" 51-HBC-10"	Vertical (4.2') Vertical (6.1')	None R014 (X, SNUB Z)	
AK	Elbow to 10" x 6" Reducer Elbow to 10" x 6" Reducer	Supply Return	47-HBC-10" 51-HBC-10"	Horizontal (8') Horizontal (9')	R008 (X) None	
AL	10" x 6" Reducer to SGN01A 10" x 6" Reducer to SGN01A	Supply Return	47-HBC-6" 108-HBC-6"	Horizontal (17.9') Horizontal (20.7')	C014 (X, Y) R009 (LAT), H007 (Y)	
AM	First Tee Main to 2nd Tee First Tee Main to 2nd Tee	Supply Return	49-HBC-10" 53-HBC-10"	Horizontal (19.8') Horizontal (18.5')	H004 (Y), C010 (Y,Z) C018 (SNUB LAT, Y)	Additional support on Supply line will decrease stress
AN	2nd Tee Branch to Elbow 2nd Tee Branch to Elbow	Supply Return	103-HBC-6" 115-HBC-6"	Horizontal (4.3') Horizontal (3.1')	None None	
AO	Elbow to Elbow N/A	Supply Return	103-HBC-6" N/A	Horizontal (2') N/A	None N/A	

Pipe Section	Pipe Section Description	Line Function	Line Size	Orientation (Length)	Pipe Supports	Comments
AP	Elbow to SGN01C Elbow to SGN01C	Supply Return	103-HBC-6" 115-HBC-6"	Vertical (8.4') Vertical (9.8')	None None	
AQ	2nd Tee Main to Elbow 2nd Tee Main to Elbow	Supply Return	49-HBC-10"/102-HBC-8" 53-HBC-10"/114-HBC-8"	Horizontal (3.8') Horizontal (5.3')	None H005 (Y)	
AR	Elbow to Elbow Elbow to Elbow	Supply Return	102-HBC-8" 114-HBC-8"	Vertical (4.1') Vertical (6')	R006 (X) R010 (X, SNUB Z)	
AS	Elbow to SGN01C Elbow to SGN01C	Supply Return	102-HBC-8" 114-HBC-8"	H/H/V (24.4') H/H/V (26.1')	C011(X,Y),C012 (X,Y), R007 (Z) C015 (X,Y),R012 (SNUB X, SNUB Y), R011 (SNUB Z)	

Table F-2.0 Train "B" Comparison of Supply and Return Line

Pipe Section	Pipe Section Description	Line Function	Line Size	Orientation (Length)	Pipe Supports	Comments
BA	Penet P-28 to Elbow Penet P-29 to Elbow	Supply Return	122-HBB-14" 123-HBB-14"	Horizontal (8.9') Horizontal (9')	None None	
BB	Elbow to Elbow Elbow to Elbow	Supply Return	122-HBB-14"/48-HBC-10" 123-HBB-14"/52-HBC-10"	Vertical (13.5') Vertical (15')	None None	
BC	Tee Branch to Elbow Tee Branch to Elbow	Supply Return	50-HBC-10" 54-HBC-10"	Horizontal (30.8') Horizontal (27.4')	C022 (Y,Z) C019 (Y,Z)	
BD	Elbow to Elbow Elbow to Elbow	Supply Return	50-HBC-10" 54-HBC-10"	Vertical (48.3') Vertical (47')	R010(Z),C024 (X,Y,Z), R012 (X) R009 (Z), C021 (X,Y, Z)	Additional support on Supply line will decrease stresses
BE	Elbow to Elbow Elbow to Elbow	Supply Return	50-HBC-10" 54-HBC-10"	Horizontal (8.5') Horizontal (10')	C026 (X,Y) R015 (X)	Additional support on Supply line will decrease stresses
BF	Elbow to 10" x 6" Reducer Elbow to 10" x 6" Reducer	Supply Return	50-HBC-10" 54-HBC-10"	Horizontal (11.3') Horizontal (11.7')	R014 (Z) C028 (Y, Z)	Return line has additional support
BG	10" x 6" Reducer to SGN01D 10" x 6" Reducer to SGN01D	Supply Return	105-HBC-6" 118-HBC-6"	Horizontal (23.5') Horizontal (23.2')	C027 (Y,Z) C025 (Y,Z), R013 (SNUB X)	Return line has snubber installed
BH	Elbow to Elbow Elbow to Elbow	Supply Return	48-HBC-10" 52-HBC-10"	Horizontal (25.8') Horizontal (29.9')	C002 (X, Y), C004 (X, Y) C001 (X, Y), C003 (X, Y)	

Pipe Section	Pipe Section Description	Line Function	Line Size	Orientation (Length)	Pipe Supports	Comments
BI	Elbow to Elbow Elbow to Elbow	Supply Return	48-HBC-10" 52-HBC-10"	Horizontal (15.5') Horizontal (14.3')	R002 (Z) R001 (Z)	
BJ	Elbow to Elbow Elbow to Elbow	Supply Return	48-HBC-10" 52-HBC-10"	Vertical (4') Vertical (2.5')	None None	
BK	Elbow to Elbow Elbow to Elbow	Supply Return	48-HBC-10" 52-HBC-10"	Horizontal (36.9') Horizontal (41.1')	C006 (X, Y), C008 (X, Y) C005 (X, Y), C007 (X, Y)	
BL	Elbow to Elbow Elbow to Elbow	Supply Return	48-HBC-10" 52-HBC-10"	Vertical (4.5') Vertical (4.5')	None None	
BM	Elbow to Elbow (Annulus) Elbow to Elbow (Annulus)	Supply Return	48-HBC-10" 52-HBC-10"	Horizontal (70.3') Horizontal (61.1')	C010 (X,Y,Z), C012 (LAT, Y), C014 (LAT, Y), R004 (LAT) C009 (X,Y,Z), C011 (LAT, Y), C013 (LAT, Y), R003 (LAT)	
BN	Elbow to Elbow Elbow to Elbow	Supply Return	48-HBC-10" 52-HBC-10"	Vertical (36.9') Vertical (36')	R008 (X), R006 (X, Z) R005 (X, Z)	Additional support on Supply line will decrease stress
BO	Elbow to Elbow Elbow to Elbow	Supply Return	48-HBC-10" 52-HBC-10"	Horizontal (9.1') Horizontal (10.6')	C016 (X, Y, Z) H001 (Y), R007 (SNUB X)	Additional Z direction support will decrease stress
BP	Elbow to 10" x 8" Reducer Elbow to 10" x 8" Reducer	Supply Return	48-HBC-10" 52-HBC-10"	Horizontal (13.1') Horizontal (13.3')	C018 (Y, Z) C015 (Y, Z)	
BQ	10" x 8" Reducer to SGN01B 10" x 8" Reducer to SGN01B	Supply Return	99-HBC-8" 111-HBC-8"	Horizontal (21.3') Horizontal (21.2')	C020 (Y,Z) C017 (Y, Z)	

Table F-3.0 Supply and Return Line Pipe Properties

Pipe Class	System	NPS	Do	Tnom	Material
HBB	GN	14"	14.0"	0.375"	SA-106 Grade B Seamless
HBB	EF	14"	14.0"	0.438"	SA-106 Grade B Seamless
HBC	GN	14"	14.0"	0.375"	SA-106 Grade B Seamless
HBC	GN	10"	10.75"	0.365"	SA-106 Grade B Seamless
HBC	GN	8"	8.625"	0.322"	SA-106 Grade B Seamless
HBC	GN	6"	6.625"	0.280"	SA-106 Grade B Seamless

Table F-4.0 Peak Differential Pressures

	Line Function	**Waterhammer Event**	**Peak Differential Pressure [12]**
Train "A"	Supply Line Supply Line	Column Closure Condensation Induced	None None
	Return Line Return Line	Column Closure Condensation Induced	225 psi 179 psi
Train "B"	Supply Line Supply Line	Column Closure Condensation Induced	None None
	Return Line Return Line	Column Closure Condensation Induced	205 psi 179 psi

M-15GN02(Q) (UNIT 1 ONLY) M-15GN02(Q)

M-15GN02(Q)

VALVE INFORMATION TABLE

VALVE NO.	CENTER OF GRAVITY LOC. FOR VALVE & OPERATOR X	Y	Z	VALVE WEIGHT (LBS)	VENDOR PAINT NO.	VALVE IDENT	P.O. ITEM NO.
V001	-1 1/2	-4 1/2	-1 1/2	188	M-114-048	BECHTEL	1.04
V006	-4 1/2	-2 1/2	-1 1/2	188	M-114-048	BECHTEL	1.04
MV939	22	22	22	22	M-132-060	BECHTEL	2.05
EF-V142					M-132-060	BECHTEL	2.05
V010					M-114-2.5	BECHTEL	1.04
V012					M-114-2.5	BECHTEL	1.04

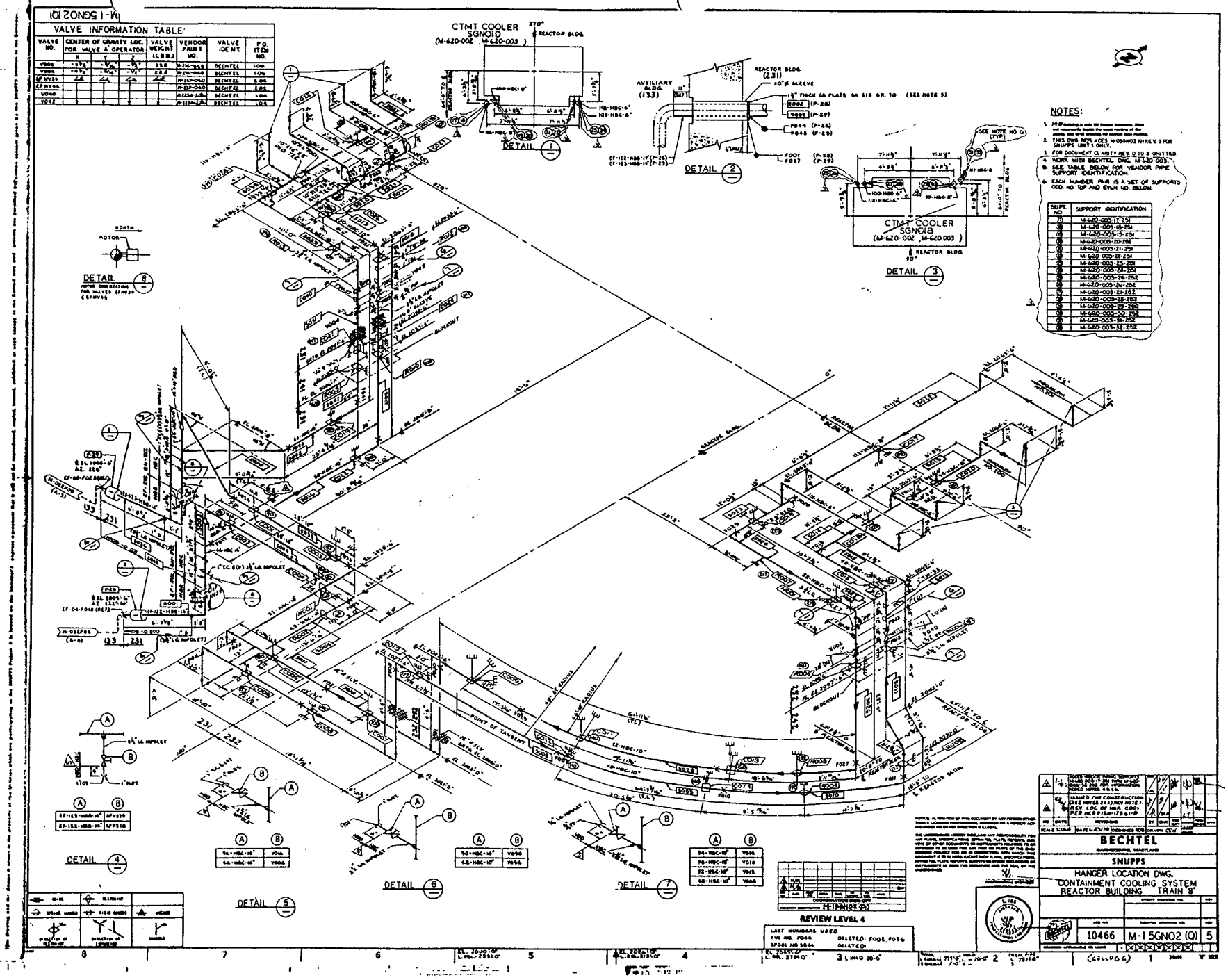

(0) 10N9G1 -W

VALVE INFORMATION TABLE

VALVE NO.	CENTER OF GRAVITY LOC. FOR VALVE & OPERATOR X	Y	Z	VALVE WEIGHT	VENDOR PRINT NO.	VALVE IDENT.	RQ. ITEM NO.	
EF HV93					M-757-060	BECHTEL	2.06	HOLD
EF HV95					M-757-061	BECHTEL	2.06	HOLD
V 001					M-630-061	BECHTEL	L06	
V 006					M-630-063	BECHTEL	L06	
V019					M-756-66	BECHTEL	L06	
V061					M-630-62	BECHTEL	L06	HOLD

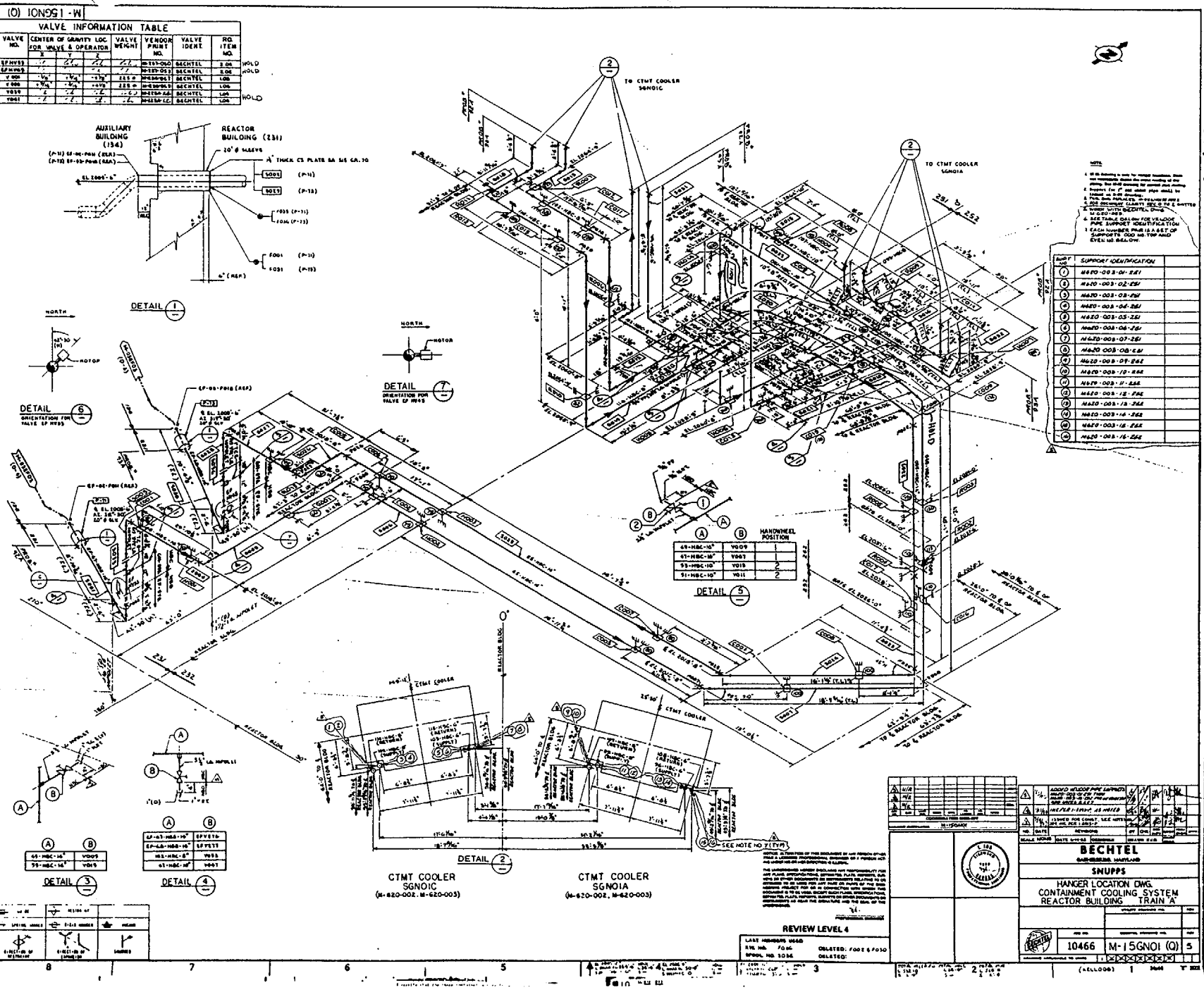

Altran Corporation
Technical Report No. 96227-TR-03
Revision 1

Attachment G

Containment Cooler Evaluation

Table G-1.0 Nozzle Load Summary for Containment Coolers

	Node Point (Nozzle Size)	Force (lbs.)			Moment (Ft-lbs.)		
		Fx	Fy	Fz	Mx	My	Mz
Train "A" Return	2850 (6")	254	508	3299	10193	2850	390
	4050 (6")	193	2200	526	2456	1103	1435
Train "B" Return	2750 (6")	650	544	974	1524	903	1266
	4300 (6")	465	184	291	761	501	1002
Upset Allowable[11]	-	7900	1660	7900	14167	14162	14167
Faulted Allowable [11]	-	14730	28440	15000	26667	26667	26667
		OK	OK	OK	OK	OK	OK
Train "A" Return	2200 (8")	489	807	453	1557	1454	2236
	3050 (8")	433	1827	4039	12863	948	1209
Train "B" Return	2600 (8")	934	480	872	2433	867	3232
	4500 (8")	364	424	1026	3256	58	1284
Upset Allowable [11]	-	9810	13000	13800	25167	16917	25167
Faulted Allowable [11]	-	12060	25600	27700	50417	25583	50417
		OK	OK	OK	OK	OK	OK

WOLF CREEK NUCLEAR OPERATING CORP.- ESW PROB 201, 96227-TR-03,
STRESS ANA. OF CONTAINMENT COOLING SYS., TRAIN B-RETURN LINE,
R001 RIGID @ NP65 IN MODEL;WAVE=4135FPS
*** LOAD COMBINATION OUTPUT: DL+TH LOCA+WH

FILE 62

NETWORK POINT LOADS ACTING ON RESTRAINT
FAULTED CONDITION

SEQ NO	FX (LB)	FY (LB)	FZ (LB)	MX (FT-LB)	MY (FT-LB)	MZ (FT-LB)	DX (IN)	DY (IN)	DZ (IN)	RX (DEG)	RY (DEG)	RZ (DEG)
5	5453.	17414.	6889.	32486.	21147.	26625.	.000	.000	.000	.000	.000	.000
20	0.	0.	0.	0.	0.	0.	.039	.056	.020	.077	.006	.003
2121	0.	0.	0.	0.	0.	0.	.041	.088	.025	.077	.006	.003
30	0.	0.	0.	0.	0.	0.	.038	.145	.135	.083	.008	.006
38	0.	0.	0.	0.	0.	0.	.017	.064	.137	.108	.020	.151
40	0.	0.	0.	0.	0.	0.	.005	.006	.102	.098	.018	.147
55	0.	0.	0.	0.	0.	0.	.019	.051	.127	.051	.008	.124
57	0.	0.	0.	0.	0.	0.	.027	.014	.172	.051	.015	.119
61	0.	0.	0.	0.	0.	0.	.002	.016	.175	.068	.200	.088
65	0.	0.	0.	0.	0.	0.	.048	.076	.001	.080	.243	.060
81	0.	0.	0.	0.	0.	0.	.031	.005	.462	.001	.027	.365
85	0.	0.	0.	0.	0.	0.	.026	.006	.451	.004	.029	.362
95	0.	0.	0.	0.	0.	0.	.029	.015	.236	.010	.006	.298
100	0.	0.	0.	0.	0.	0.	.002	.013	.140	.021	.038	.270
116	0.	0.	0.	0.	0.	0.	.005	.016	.016	.107	.010	.204
117	0.	0.	0.	0.	0.	0.	.000	.008	.005	.100	.006	.204
130	0.	0.	0.	0.	0.	0.	.080	.015	.137	.107	.014	.167
140	0.	0.	0.	0.	0.	0.	.141	.003	.190	.125	.018	.142
150	0.	0.	0.	0.	0.	0.	.310	.040	.278	.131	.030	.120
160	0.	0.	0.	0.	0.	0.	.410	.018	.297	.074	.037	.174
170	0.	0.	0.	0.	0.	0.	.609	.439	.287	.003	.049	.185
172	0.	0.	0.	0.	0.	0.	.711	.617	.259	.011	.051	.113
180	0.	0.	0.	0.	0.	0.	.448	.515	.103	.066	.032	.192
187	0.	0.	0.	0.	0.	0.	.004	.366	.002	.011	.023	.173
195	0.	0.	0.	0.	0.	0.	.146	.305	.008	.022	.019	.143
196	0.	0.	0.	0.	0.	0.	.150	.314	.007	.022	.019	.143
211	0.	0.	0.	0.	0.	0.	.385	.127	.125	.140	.014	.041
215	0.	0.	0.	0.	0.	0.	.374	.034	.078	.097	.015	.018
216	0.	0.	0.	0.	0.	0.	.373	.023	.070	.085	.015	.015
217	0.	0.	0.	0.	0.	0.	.368	.001	.049	.056	.014	.004
221	0.	0.	0.	0.	0.	0.	.342	.013	.001	.011	.003	.046
223	0.	0.	0.	0.	0.	0.	.334	.007	.001	.012	.004	.046
230	0.	0.	0.	0.	0.	0.	.196	.050	.014	.022	.003	.000
235	0.	0.	0.	0.	0.	0.	.179	.048	.014	.023	.001	.008
240	0.	0.	0.	0.	0.	0.	.089	.019	.008	.027	.008	.001
260	0.	0.	0.	0.	0.	0.	.003	.001	.003	.000	.026	.000
2600	274.	142.	382.	1068.	203.	763.	.000	.000	.000	.000	.000	.000
275	0.	0.	0.	0.	0.	0.	.005	.001	.008	.053	.075	.098
2750	351.	216.	643.	1035.	549.	720.	.000	.000	.000	.000	.000	.000
310	0.	0.	0.	0.	0.	0.	.202	.173	.039	.051	.024	.051
320	0.	0.	0.	0.	0.	0.	.311	.044	.000	.032	.022	.238

Altran Report 96227-TR-03 Rev. 1
Att./Appx. G Sh G.3

WOLF CREEK NUCLEAR OPERATING CORP.- ESW PROB 201, 96227-TR-03,
STRESS ANA. OF CONTAINMENT COOLING SYS., TRAIN B-RETURN LINE,
R001 RIGID @ NP65 IN MODEL;WAVE=4135FPS
*** LOAD COMBINATION OUTPUT: DL+TH LOCA+WH

FILE 62

NETWORK POINT LOADS ACTING ON RESTRAINT
FAULTED CONDITION

SEQ NO	FX (LB)	FY (LB)	FZ (LB)	MX (FT-LB)	MY (FT-LB)	MZ (FT-LB)	DX (IN)	DY (IN)	DZ (IN)	RX (DEG)	RY (DEG)	RZ (DEG)
330	0.	0.	0.	0.	0.	0.	.416	.265	.007	.007	.003	.042
335	0.	0.	0.	0.	0.	0.	.287	.165	.002	.007	.012	.110
340	0.	0.	0.	0.	0.	0.	.134	.081	.009	.001	.025	.115
347	0.	0.	0.	0.	0.	0.	.005	.003	.004	.024	.037	.072
370	0.	0.	0.	0.	0.	0.	.049	.144	.095	.045	.058	.012
371	0.	0.	0.	0.	0.	0.	.054	.145	.098	.045	.058	.012
386	0.	0.	0.	0.	0.	0.	.000	.265	.122	.119	.091	.040
390	0.	0.	0.	0.	0.	0.	.005	.258	.119	.121	.092	.040
396	0.	0.	0.	0.	0.	0.	.142	.018	.004	.110	.000	.033
399	0.	0.	0.	0.	0.	0.	.098	.004	.001	.100	.013	.031
400	0.	0.	0.	0.	0.	0.	.001	.039	.025	.076	.010	.010
405	0.	0.	0.	0.	0.	0.	.017	.041	.027	.076	.006	.006
407	0.	0.	0.	0.	0.	0.	.107	.018	.009	.070	.007	.001
409	0.	0.	0.	0.	0.	0.	.121	.021	.009	.069	.001	.017
430	0.	0.	0.	0.	0.	0.	.005	.000	.003	.028	.060	.127
4300	386.	83.	229.	551.	433.	916.	.000	.000	.000	.000	.000	.000
450	0.	0.	0.	0.	0.	0.	.002	.001	.006	.000	.001	.000
4500	145.	197.	813.	2557.	9.	450.	.000	.000	.000	.000	.000	.000

Altran Report 96227-TR-03 Rev. 1
Att./Appx. 6 Sh 6.4

WOLF CREEK NUCLEAR OPERATING CORP.- ESW PROB 201, 96227-TR-03,
STRESS ANA. OF CONTAINMENT COOLING SYS., TRAIN B-RETURN LINE,
R001 RIGID @ NP65 IN MODEL;WAVE=4135FPS
*** LOAD COMBINATION OUTPUT: DL+TH LOCA+WH

FILE 63

NETWORK POINT LOADS ACTING ON RESTRAINT
FAULTED CONDITION

SEQ NO	FX (LB)	FY (LB)	FZ (LB)	MX (FT-LB)	MY (FT-LB)	MZ (FT-LB)	DX (IN)	DY (IN)	DZ (IN)	RX (DEG)	RY (DEG)	RZ (DEG)
5	1065.	6674.	2057.	7479.	4327.	16230.	.000	.000	.000	.000	.000	.000
20	0.	0.	0.	0.	0.	0.	.039	.056	.020	.077	.006	.003
2121	0.	0.	0.	0.	0.	0.	.041	.088	.025	.077	.006	.003
30	0.	0.	0.	0.	0.	0.	.038	.145	.135	.083	.008	.006
38	0.	0.	0.	0.	0.	0.	.017	.064	.137	.108	.020	.151
40	0.	0.	0.	0.	0.	0.	.005	.006	.102	.098	.018	.147
55	0.	0.	0.	0.	0.	0.	.019	.051	.127	.051	.008	.124
57	0.	0.	0.	0.	0.	0.	.027	.014	.172	.051	.015	.119
61	0.	0.	0.	0.	0.	0.	.002	.016	.175	.068	.200	.088
65	0.	0.	0.	0.	0.	0.	.048	.076	.001	.080	.243	.060
81	0.	0.	0.	0.	0.	0.	.031	.005	.462	.001	.027	.365
85	0.	0.	0.	0.	0.	0.	.026	.006	.451	.004	.029	.362
95	0.	0.	0.	0.	0.	0.	.029	.015	.236	.010	.006	.298
100	0.	0.	0.	0.	0.	0.	.002	.013	.140	.021	.038	.270
116	0.	0.	0.	0.	0.	0.	.005	.016	.016	.107	.010	.204
117	0.	0.	0.	0.	0.	0.	.000	.008	.005	.100	.006	.204
130	0.	0.	0.	0.	0.	0.	.080	.015	.137	.107	.014	.167
140	0.	0.	0.	0.	0.	0.	.141	.003	.190	.125	.018	.142
150	0.	0.	0.	0.	0.	0.	.310	.040	.278	.131	.030	.120
160	0.	0.	0.	0.	0.	0.	.410	.018	.297	.074	.037	.174
170	0.	0.	0.	0.	0.	0.	.609	.439	.287	.003	.049	.185
172	0.	0.	0.	0.	0.	0.	.711	.617	.259	.011	.051	.113
180	0.	0.	0.	0.	0.	0.	.448	.515	.103	.066	.032	.192
187	0.	0.	0.	0.	0.	0.	.004	.366	.002	.011	.023	.173
195	0.	0.	0.	0.	0.	0.	.146	.305	.008	.022	.019	.143
196	0.	0.	0.	0.	0.	0.	.150	.314	.007	.022	.019	.143
211	0.	0.	0.	0.	0.	0.	.385	.127	.125	.140	.014	.041
215	0.	0.	0.	0.	0.	0.	.374	.034	.078	.097	.015	.018
216	0.	0.	0.	0.	0.	0.	.373	.023	.070	.085	.015	.015
217	0.	0.	0.	0.	0.	0.	.368	.001	.049	.056	.014	.004
221	0.	0.	0.	0.	0.	0.	.342	.013	.001	.011	.003	.046
223	0.	0.	0.	0.	0.	0.	.334	.007	.001	.012	.004	.046
230	0.	0.	0.	0.	0.	0.	.196	.050	.014	.022	.003	.000
235	0.	0.	0.	0.	0.	0.	.179	.048	.014	.023	.001	.008
240	0.	0.	0.	0.	0.	0.	.089	.019	.008	.027	.008	.001
260	0.	0.	0.	0.	0.	0.	.003	.001	.003	.000	.026	.000
2600	934.	480.	872.	2433.	867.	3232.	.000	.000	.000	.000	.000	.000
275	0.	0.	0.	0.	0.	0.	.005	.001	.008	.053	.075	.098
2750	650.	544.	974.	1524.	903.	1266.	.000	.000	.000	.000	.000	.000
310	0.	0.	0.	0.	0.	0.	.202	.173	.039	.051	.024	.051
320	0.	0.	0.	0.	0.	0.	.311	.044	.000	.032	.022	.238

Altran Report
96227-TR-03 Rev. 1
Att./Appx. G Sh G.5

WOLF CREEK NUCLEAR OPERATING CORP.- ESW PROB 201, 96227-TR-03,
STRESS ANA. OF CONTAINMENT COOLING SYS., TRAIN B-RETURN LINE,
R001 RIGID @ NP65 IN MODEL;WAVE=4135FPS
*** LOAD COMBINATION OUTPUT: DL+TH LOCA+WH

FILE 63

NETWORK POINT LOADS ACTING ON RESTRAINT
FAULTED CONDITION

SEQ NO	FX (LB)	FY (LB)	FZ (LB)	MX (FT-LB)	MY (FT-LB)	MZ (FT-LB)	DX (IN)	DY (IN)	DZ (IN)	RX (DEG)	RY (DEG)	RZ (DEG)
330	0.	0.	0.	0.	0.	0.	.416	.265	.007	.007	.003	.042
335	0.	0.	0.	0.	0.	0.	.287	.165	.002	.007	.012	.110
340	0.	0.	0.	0.	0.	0.	.134	.081	.009	.001	.025	.115
347	0.	0.	0.	0.	0.	0.	.005	.003	.004	.024	.037	.072
370	0.	0.	0.	0.	0.	0.	.049	.144	.095	.045	.058	.012
371	0.	0.	0.	0.	0.	0.	.054	.145	.098	.045	.058	.012
386	0.	0.	0.	0.	0.	0.	.000	.265	.122	.119	.091	.040
390	0.	0.	0.	0.	0.	0.	.005	.258	.119	.121	.092	.040
396	0.	0.	0.	0.	0.	0.	.142	.018	.004	.110	.000	.033
399	0.	0.	0.	0.	0.	0.	.098	.004	.001	.100	.013	.031
400	0.	0.	0.	0.	0.	0.	.001	.039	.025	.076	.010	.010
405	0.	0.	0.	0.	0.	0.	.017	.041	.027	.076	.006	.006
407	0.	0.	0.	0.	0.	0.	.107	.018	.009	.070	.007	.001
409	0.	0.	0.	0.	0.	0.	.121	.021	.009	.069	.001	.017
430	0.	0.	0.	0.	0.	0.	.005	.000	.003	.028	.060	.127
4300	465.	184.	291.	761.	501.	1002.	.000	.000	.000	.000	.000	.000
450	0.	0.	0.	0.	0.	0.	.002	.001	.006	.000	.001	.000
4500	364.	424.	1026.	3256.	58.	1284.	.000	.000	.000	.000	.000	.000

Altran Report
96227-TR-03 Rev. 1
Att./Appx. G Sh G.6

WOLFCREEK NUCLEAR OPERATING CORP.
PIPING ANA. CONTMT. AIRCOOLER "A" RETURN LINE
R013 SNUB IN @ NP1275;WAVE=4135FPS;RISE=100MS;DURATION=200MS;P=225
** LOAD CASE SUMMATIONS DL + TH2 + WH **

FILE 51

NETWORK POINT LOADS ACTING ON RESTRAINT
FAULTED CONDITION

SEQ NO	FX (LB)	FY (LB)	FZ (LB)	MX (FT-LB)	MY (FT-LB)	MZ (FT-LB)	DX (IN)	DY (IN)	DZ (IN)	RX (DEG)	RY (DEG)	RZ (DEG)
500	354.	2.	307.	2.	3.	3.	.000	.000	.000	.000	.000	.000
800	0.	0.	0.	0.	0.	0.	.003	.004	.000	.126	.091	.151
1000	0.	0.	0.	0.	0.	0.	.002	.000	.001	.134	.095	.161
1080	0.	0.	0.	0.	0.	0.	.257	.457	.280	.241	.082	.118
1090	0.	0.	0.	0.	0.	0.	.253	.455	.288	.242	.081	.119
1100	0.	0.	0.	0.	0.	0.	.221	.522	.235	.241	.082	.120
1190	0.	0.	0.	0.	0.	0.	.004	.050	.628	.114	.004	.165
1200	0.	0.	0.	0.	0.	0.	.007	.009	.603	.096	.013	.163
1270	0.	0.	0.	0.	0.	0.	.029	.057	.472	.027	.053	.147
1330	0.	0.	0.	0.	0.	0.	.010	.011	.438	.015	.013	.121
1370	0.	0.	0.	0.	0.	0.	.002	.003	.287	.002	.003	.095
1410	0.	0.	0.	0.	0.	0.	.002	.007	.125	.012	.010	.068
1420	0.	0.	0.	0.	0.	0.	.007	.004	.085	.023	.018	.061
1450	0.	0.	0.	0.	0.	0.	.011	.008	.003	.023	.014	.055
1455	0.	0.	0.	0.	0.	0.	.037	.017	.037	.004	.014	.074
1530	0.	0.	0.	0.	0.	0.	.034	.049	.040	.063	.029	.051
1560	0.	0.	0.	0.	0.	0.	.006	.065	.008	.002	.031	.001
1570	0.	0.	0.	0.	0.	0.	.005	.105	.003	.008	.032	.001
1620	0.	0.	0.	0.	0.	0.	.004	.285	.009	.007	.035	.005
1700	0.	0.	0.	0.	0.	0.	.152	.025	.167	.081	.029	.040
1710	0.	0.	0.	0.	0.	0.	.158	.012	.176	.069	.028	.035
1720	0.	0.	0.	0.	0.	0.	.169	.005	.192	.047	.026	.028
1750	0.	0.	0.	0.	0.	0.	.176	.013	.204	.034	.025	.023
1770	0.	0.	0.	0.	0.	0.	.200	.026	.247	.002	.021	.019
1775	0.	0.	0.	0.	0.	0.	.212	.026	.277	.007	.011	.020
1840	0.	0.	0.	0.	0.	0.	.133	.049	.185	.106	.198	.019
1850	0.	0.	0.	0.	0.	0.	.131	.048	.179	.107	.199	.020
1860	0.	0.	0.	0.	0.	0.	.147	.041	.181	.106	.198	.019
1890	0.	0.	0.	0.	0.	0.	.071	.027	.009	.137	.205	.023
1910	0.	0.	0.	0.	0.	0.	.041	.018	.106	.128	.204	.013
1970	0.	0.	0.	0.	0.	0.	.015	.014	.290	.068	.137	.064
1980	0.	0.	0.	0.	0.	0.	.001	.027	.277	.063	.125	.066
2030	0.	0.	0.	0.	0.	0.	.007	.021	.169	.050	.024	.055
2060	0.	0.	0.	0.	0.	0.	.027	.051	.068	.036	.021	.021
2100	0.	0.	0.	0.	0.	0.	.032	.077	.016	.006	.017	.029
2200	489.	807.	453.	1557.	1454.	2236.	.000	.000	.000	.000	.000	.000
2520	0.	0.	0.	0.	0.	0.	.145	.006	.216	.021	.018	.010
2530	0.	0.	0.	0.	0.	0.	.143	.006	.216	.020	.017	.009
2540	0.	0.	0.	0.	0.	0.	.144	.005	.211	.021	.018	.010
2560	0.	0.	0.	0.	0.	0.	.096	.005	.226	.000	.011	.006
2600	0.	0.	0.	0.	0.	0.	.025	.006	.216	.053	.005	.054

Altran Report 96227-TR-03 Rev. 1
Att./Appx. G Sh G.7

WOLFCREEK NUCLEAR OPERATING CORP.
PIPING ANA. CONTMT. AIRCOOLER "A" RETURN LINE
SNUB R013 IN @ NP1275;WAVE=4135FPS;RISE=17MS;DURATION=34.1MS;P=179
** LOAD CASE SUMMATIONS DL + TH2 + WH **

FILE 51

NETWORK POINT LOADS ACTING ON RESTRAINT
FAULTED CONDITION

SEQ NO	FX (LB)	FY (LB)	FZ (LB)	MX (FT-LB)	MY (FT-LB)	MZ (FT-LB)	DX (IN)	DY (IN)	DZ (IN)	RX (DEG)	RY (DEG)	RZ (DEG)
1000	8544.	9143.	8159.	33361.	30976.	56929.	.000	.000	.000	.000	.000	.000
1080	0.	0.	0.	0.	0.	0.	.161	.142	.185	.277	.058	.087
1090	0.	0.	0.	0.	0.	0.	.159	.140	.194	.278	.058	.088
1100	0.	0.	0.	0.	0.	0.	.126	.191	.153	.277	.058	.089
1190	0.	0.	0.	0.	0.	0.	.000	.008	.549	.020	.014	.078
1200	0.	0.	0.	0.	0.	0.	.007	.001	.524	.023	.023	.073
1270	0.	0.	0.	0.	0.	0.	.037	.048	.401	.022	.079	.008
1330	0.	0.	0.	0.	0.	0.	.010	.020	.382	.028	.010	.002
1370	0.	0.	0.	0.	0.	0.	.001	.001	.231	.003	.002	.002
1410	0.	0.	0.	0.	0.	0.	.001	.006	.069	.010	.007	.007
1420	0.	0.	0.	0.	0.	0.	.007	.003	.029	.018	.013	.008
1450	0.	0.	0.	0.	0.	0.	.028	.008	.040	.004	.010	.024
1455	0.	0.	0.	0.	0.	0.	.065	.017	.068	.031	.008	.049
1530	0.	0.	0.	0.	0.	0.	.046	.048	.043	.068	.012	.071
1560	0.	0.	0.	0.	0.	0.	.009	.066	.009	.003	.017	.000
1570	0.	0.	0.	0.	0.	0.	.006	.106	.004	.010	.018	.003
1620	0.	0.	0.	0.	0.	0.	.004	.286	.010	.009	.026	.005
1700	0.	0.	0.	0.	0.	0.	.145	.023	.177	.083	.028	.039
1710	0.	0.	0.	0.	0.	0.	.152	.010	.186	.070	.027	.035
1720	0.	0.	0.	0.	0.	0.	.162	.007	.202	.049	.026	.027
1750	0.	0.	0.	0.	0.	0.	.169	.016	.213	.036	.025	.022
1770	0.	0.	0.	0.	0.	0.	.194	.028	.256	.005	.025	.014
1775	0.	0.	0.	0.	0.	0.	.209	.021	.286	.014	.019	.009
1840	0.	0.	0.	0.	0.	0.	.146	.006	.237	.028	.150	.001
1850	0.	0.	0.	0.	0.	0.	.144	.006	.232	.028	.151	.001
1860	0.	0.	0.	0.	0.	0.	.157	.008	.232	.028	.150	.001
1890	0.	0.	0.	0.	0.	0.	.085	.008	.085	.037	.166	.011
1910	0.	0.	0.	0.	0.	0.	.055	.017	.005	.041	.169	.024
1970	0.	0.	0.	0.	0.	0.	.010	.026	.189	.052	.110	.039
1980	0.	0.	0.	0.	0.	0.	.002	.013	.200	.052	.100	.042
2030	0.	0.	0.	0.	0.	0.	.003	.014	.165	.033	.015	.039
2060	0.	0.	0.	0.	0.	0.	.025	.047	.064	.037	.021	.013
2100	0.	0.	0.	0.	0.	0.	.031	.076	.019	.003	.021	.028
2200	127.	611.	401.	1272.	695.	1032.	.000	.000	.000	.000	.000	.000
2520	0.	0.	0.	0.	0.	0.	.138	.009	.225	.021	.016	.011
2530	0.	0.	0.	0.	0.	0.	.136	.009	.225	.020	.016	.010
2540	0.	0.	0.	0.	0.	0.	.137	.008	.220	.021	.016	.011
2560	0.	0.	0.	0.	0.	0.	.089	.007	.234	.001	.009	.003
2600	0.	0.	0.	0.	0.	0.	.021	.007	.220	.057	.008	.046
2610	0.	0.	0.	0.	0.	0.	.004	.032	.197	.063	.006	.043
2615	0.	0.	0.	0.	0.	0.	.002	.034	.195	.063	.006	.043

Altran Report 96227-TR-03 Rev. 1
Att./Appx. G Sh G.8

WOLFCREEK NUCLEAR OPERATING CORP.
PIPING ANA. CONTMT. AIRCOOLER "A" RETURN LINE
SNUB R013 IN @ NP1275;WAVE=4135FPS;RISE=17MS;DURATION=34.1MS;P=179
** LOAD CASE SUMMATIONS DL + TH2 + WH **

FILE 51

NETWORK POINT LOADS ACTING ON RESTRAINT
FAULTED CONDITION

SEQ NO	FX (LB)	FY (LB)	FZ (LB)	MX (FT-LB)	MY (FT-LB)	MZ (FT-LB)	DX (IN)	DY (IN)	DZ (IN)	RX (DEG)	RY (DEG)	RZ (DEG)
2680	0.	0.	0.	0.	0.	0.	.009	.060	.055	.053	.006	.005
2690	0.	0.	0.	0.	0.	0.	.010	.067	.046	.044	.004	.004
2710	0.	0.	0.	0.	0.	0.	.011	.073	.025	.013	.002	.001
2730	0.	0.	0.	0.	0.	0.	.016	.039	.015	.063	.018	.007
2850	204.	461.	3122.	9650.	2708.	228.	.000	.000	.000	.000	.000	.000
3040	0.	0.	0.	0.	0.	0.	.000	.013	.005	.038	.004	.003
3050	378.	1499.	3415.	11077.	800.	1006.	.000	.000	.000	.000	.000	.000

Altran Report
96227-TR-03 Rev. 1
Att./Appx. G Sh G.9

WOLFCREEK NUCLEAR OPERATING CORP.
PIPING ANA. CONTMT. AIRCOOLER "A" RETURN LINE
R013 SNUB IN @ NP1275;WAVE=4135FPS;RISE=100MS;DURATION=200MS;P=225
** LOAD CASE SUMMATIONS DL + TH2 + WH **

FILE 51

NETWORK POINT LOADS ACTING ON RESTRAINT
FAULTED CONDITION

SEQ NO	FX (LB)	FY (LB)	FZ (LB)	MX (FT-LB)	MY (FT-LB)	MZ (FT-LB)	DX (IN)	DY (IN)	DZ (IN)	RX (DEG)	RY (DEG)	RZ (DEG)
2610	0.	0.	0.	0.	0.	0.	.005	.030	.194	.059	.004	.051
2615	0.	0.	0.	0.	0.	0.	.003	.033	.192	.059	.004	.051
2680	0.	0.	0.	0.	0.	0.	.009	.060	.055	.053	.004	.006
2690	0.	0.	0.	0.	0.	0.	.010	.067	.045	.044	.003	.006
2710	0.	0.	0.	0.	0.	0.	.010	.073	.024	.014	.001	.003
2730	0.	0.	0.	0.	0.	0.	.016	.039	.016	.063	.019	.006
2850	254.	508.	3299.	10193.	2850.	390.	.000	.000	.000	.000	.000	.000
3050	433.	1827.	4039.	12863.	948.	1209.	.000	.000	.000	.000	.000	.000
4030	0.	0.	0.	0.	0.	0.	.006	.044	.017	.040	.045	.017
4050	193.	2200.	526.	2456.	1103.	1435.	.000	.000	.000	.000	.000	.000

Altran Report
96227-TR-03 Rev. 1
Att./Appx. G Sh G.10

NESE 255
Rev. 0

ALTRAN SHEET: G-11
CALC NO. 96227-TR-03 REV. 0
BY SG DATE 2/5/98
CKD DATE 2/10/98

INDEX

		Page
I.	Design Requirements	1
II.	Design Conditions	1
III.	Materials	1
IV.	Design Calculations	2
	4.1 Header	2
	4.2 End Caps	4
	4.3 Tube and Return Bends	6
	4.4 Strength of Plug Couplings	11
	4.5 Header Nozzle	13
	4.6 Bolting Flange on Nozzle	16

American Air Filter Company, Inc.
ASME Section III, Class 3 Coils

Design Calculations (Double Serpentine, 90/10 Tubing & Headers)

1.0 Design Requirements

(a) Header assembly to comply with Section III, Class 3 of the ASME Boiler of Pressure Vessel code.

(b) Design rules of Section III, Class 3 apply generally, specifically, para. ND-3300, vessel design.

2.0 Design Conditions

271 [12]

(a) Design pressure = 200 psi

New pressure requires 225 psi. Leave evaluation as-is, which is conservative. 12/2/00

(b) Design temperature = 320 F

(c) Type of joint construction: brazing; lap joint flange, ANSI B-16.5-1968

ALTRAN SHEET: G-12
CALC NO. 96227-TR-03 REV. 0
BY SG DATE 2/5/98
CKD DATE 2/10/98

3.0 Material

3.1 Header

Schedule 40 seamless pipe, specification SB-466 Type 706 annealed. Allowable stress based on interpolation at 320 F = 7760 psi, Table I-8.4

3.2 End Caps

Plate, specification SB-171 Type 706 annealed. Allowable stress based on interpolation at 320 F = 8880 psi, Table I-8.4

3.3 Heat Transfer Tubes & Return Bends

Tubes, specification SB-111 Type 706 annealed. Allowable stress at 320 F = 8880 psi, Table I-8.4

3.4 Service Couplings

Copper-Silicon Alloy Rod, specification SB-98 Type Alloy 651 half hard. Allowable stress at 320°F = 9200 psi, Table I-8.4

3.5 Header Stub & Flange

Stubs, specification SA-234 Grade WPB; Allowable stress at 320°F 15,000 psi, Table I-7.1. Flanges, specification SA-181 Grade I or II, Table I-7.1, or SA-105, Table I-7.1.

Design Calculations (Double Serpentine, 90/10 Tubing & Headers)

4.1.3 Ligament Efficiency Applicable to Longitudinal Stress

On the basis of preceding paragraph 4.1.2, a ligament efficiency of 0.579 is used in the thickness calculations for the header involving longitudinal stress.

4.1.4 Required Thickness of Header (Circumferential Stress)

$$t_r = \frac{PR}{SEE_1 - 0.6P} \text{ : Par. ND-3324.3 (a)}$$

t_r = required thickness, in.

P = design pressure, psi = 200 271

R = inside radius of header, in. = 1.543"

S = allowable stress at temperature, psi = 7760 psi

E = joint efficiency of header = 1.00 (seamless)

E_1 = efficiency of ligament with respect to circumferential stress = 0.579

$$t_r = \frac{200 \times 1.543}{7760 \times 1.0 \times 0.579 - 0.6 \times 200}$$ 271 271

t_r = 0.0705" .097

Actual thickness = 0.207" min. so header wall meets requirements.

4.1.5 Required Thickness of Header (Longitudinal Stress)

$$t_r = \frac{PR}{2SEE_1 + 0.4p} \text{ : Par. ND-3324.3 (b)}$$

ALTRAN	SHEET: G-13
CALC NO. 96227-TR-03	REV. 0
BY SG	DATE 2/5/98
CKD. [illegible]	DATE 2/10/98

t_r = required thickness, in.

P = design pressure, psi = 200

R = inside radius of header, in. = 1.543"

S = allowable stress at temperature, psi = 7760 psi

E = joint efficiency of header, 1.00 (no joint normal to direction of stress)

Design Calculations (Double Serpentine, 90/10 Tubing & Headers)

E_1 = efficiency of ligament, Per 4.1.3 above

$$t_r = \frac{200 \times 1.543}{2 \times 7760 \times 1.00 \times 0.579 + 0.4 \times 200}$$ 271 271

t_r = 0.0340" .046

Actual thickness = 0.207" min. so header wall meets requirements

4.2 End Caps

4.2.1 Required Thickness of End Closure

Figure ND-3325-1, Unstayed Flat Head, para. ND-3325.2 as applicable.

$t_r = d\sqrt{CP/S}$: Equation (1) para. ND-3325.2 (b)

C = 0.5 m Para. ND-3325.3 Figures ND-3325-1 (e), (f) and (g) where m = the ratio of t_r (required thickness of a seamless shell) to t_a (actual thickness of shell) and 0.5 m shall not be less than 0.30.

From paragraph 4.1.4 the required thickness of the seamless shell is 0.0705". From paragraph 4.1.1 the actual thickness of the shell is 0.207".

$$m = \frac{0.0705}{0.207}$$ 0.097

m = 0.3406 0.469

C = 0.5 m

C = 0.5 x 0.3406 .469

ALTRAN	SHEET G-14
CALC NO. 96227-TR-03	REV 0
BY SG	DATE 2/5/98
CKD	DATE 2/10/98

1 12/12/98

Design Calculations (Double Serpentine, 90/10 Tubing & Headers)

ALTRAN SHEET G-15
CALC NO 962277-TR-03 REV 0
BY SG DATE 2/5/98
CKD DATE 2/10/98

$C = 0.1703 < 0.30$ 0.234

Therefore $C = 0.30$

$t_r = d\sqrt{CP/S}$

t_r = required thickness, in.

d = inside diameter of shell, in. = 3.086"

C = 0.30

P = design pressure, psi = 200 psi 271

S = allowable stress at temperature, psi = 8880 psi

$t_r = 3.086\sqrt{0.3 \times 200/8880}$

$t_r = 0.253"$ 0.295" 271

Actual thickness = 0.375" so end closure meets requirements.

4.2.2 Strength of Circumferential Joint for End Closure

(a) Hydraulic load on end closure

$W_h = 3.1416R^2P$

W_h = hydraulic load on end closure, lbs.

R = inside radius of header, in. = 1.543"

P = design pressure, psi = 200 psi 271

$W_h = 3.1416 \times (1.543)^2 \times 200$ 271

$W_h = 1496$ lbs 2027

(b) Area of end closure brazed joint in shear

$A_{br} = 3.1416D\ t_r$

A_{br} = area of brazed joint in shear, in.^{2}

D = inside diameter of header, in. = 3.086"

t_r = actual thickness of end closure, in. = 0.375"

$A_{br} = 3.1416 \times 3.086 \times 0.375$

$A_{br} = 3.636$ in.^{2}

Design Calculations (Double Serpentine, 90/10 Tubing & Headers)

ALTRAN SHEET G-16
CALC NO. 96227-TR-03 REV 0
BY SG DATE 2/5/98
CKD DATE 2/10/98

(c) Adequacy of end closure joint

$W_j = A_{br} \times S \times E_s \times E$

W_j = allowable load on joint, lbs.

S = allowable stress in material (weakest) psi = 7760 psi

E_s = joint efficiency in shear, = 0.70

E = joint efficiency of brazed joint, related to inspection, = 0.50

$W_j = 3.636 \times 7760 \times 0.70 \times 0.50$

W_j = 9875 lbs.

since $W_j = 9875 > W_h =$ 1496 2027, brazed joint of end closure meets requirements.

4.3 Tubing and Return Bends

4.3.1 Required Thickness of Tubing
Specification SB-111 Alloy 706
Maximum outside diameter (after expansion) 0.640"
Maximum inside diameter 0.596"
Minimum wall of tubing 0.022"

4.3.1.1 Circumferential Stress by Paragraph ND-3324.3 (a)

Where

t_r = Required Thickness

P = Design Pressure = 200 271 psi

R = Inside radius of tubing = 0.298"

S = Allowable stress at temperature = 8880 psi

E = Joint efficiency of tubing, 1.0 (Seamless)

$$t_r = \frac{PR}{SE - .6P}$$

$$= \frac{200(0.298)}{8880(1.0) - .6(200)} = 0.00680" \quad .0092"$$

Actual thickness minimum will be 0.022", so tubing meets wall thickness requirements.

4.3.1.2 Longitudinal Stress by Paragraph ND-3324.3 (b)

Where

t_r = Required Thickness

P = Design Pressure = 200 271 psi

Design Calculations (Double Serpentine, 90/10 Tubing & Headers)

ALTRAN SHEET: G-17
CALC NO. 96227-TR-02 REV. 0
BY SG DATE 2/5/98
CKD DATE 2/10/98

R = Inside radius of tubing = 0.298"

S = Allowable stress at temperature = 8880 psi

E = Joint efficiency of tubing, 1.0 (seamless)

$$t_t = \frac{PR}{2SE + .4P}$$

$$t_r = \frac{200(0.298)}{2(8880)(1.0) + .4(200)} = 0.00334" \quad 0.0045"$$

Actual thickness, minimum, will be 0.022", so tubing meets wall thickness requirements.

4.3.2 Required Thickness of Return Bends
Specification SB-111 Alloy 706
Maximum Outside Diameter (after expansion) 0.640"
Maximum Inside Diameter 0.610"
Minimum Wall of Bend at Outside Bend Point = 0.0146

4.3.2.1 Circumferential Stress by Paragraph ND-3324.3 (a)

Where

t_r = Required thickness

P = Design pressure = 200 psi

R = Inside radius of tubing = 0.305"

S = Allowable stress at temperature = 8880 psi

E = Joint efficiency of tubing, 1.0 (seamless)

$$t_r = \frac{PR}{SE - .6P}$$

$$= \frac{200(.305)}{8880(1.0) - .6(200)} = 0.00696" \quad 0.0094"$$

Actual thickness minimum wall will be = 0.0146";
therefore, return bend meets wall thickness requirements.

4.3.2.2 Longitudinal stress by Paragraph ND-3324.3 (b)

$$t_r = \frac{PR}{2SE + .4P}$$

$$= \frac{200(0.305)}{2(8880)(1.0) + .4(200)} = 0.00341" \quad 0.0046"$$

Actual thickness minimum wall will be 0.0146" therefore, return bend meets wall thickness requirement.

Design Calculations (Double Serpentine, 90/10 Tubing & Headers)

4.3.2.3 Strength of Return Bend Brazed Jointed in Tension

ALTRAN SHEET: G-18
CALC NO. 96227-TR-03 REV. 0
BY SG DATE 2/5/98
CKD DATE 2/10/98

(1) Hydraulic Load on Return Bend

$$W_h = \frac{3.141}{4} D^2 P$$

Where

W_h = Hydraulic load on return bend, lbs

D = Diameter, inside, of return bend, in

P = Design pressure = 200 psi 271

$$W_h = \frac{3.141}{4} (.640 - .0146(2))^2 (200) = 58.60 \text{ lb}$$ 79.4

(2) Area of brazed joint at return bend to tube joint

$$A_{br} = 3.141 (D) L_{br}$$

Where

A_{br} = Area of brazed joint in shear, in^2

D = Outside diameter of tubing, in

L_{br} = Overlap of braze at joint, in

$A_{br} = 3.141 (.640)(.250) = 0.503 \text{ in}^2$

(3) Adequacy of Return Bend Joint

$$W_j = A_{br} S E_s E$$

Where

W_j = Allowable load on joint, lb

A_{br} = Area of brazed joint in shear, in^2

S = Allowable stress in weaker material, lb/in^2 = 8880 psi

E_s = Joint efficiency in shear 0.70

E = Joint efficiency relative to inspection, 0.50

$W_j = 0.502 (8880)(0.70)(0.5)$

$= 1560$ lb

Since $W_j > W_h$ 79.4

1560 > 58.6 Brazed Joint meets requirements.

Design Calculations (Double Serpentine, 90/10 Tubing & Headers)

4.3.2.4 Strength of Return Bend in Tension

(1) Hydraulic load on return bend taken from 4.3.2.3 above W_h = 58.60 (79.4) lb

(2) Area of metal cross section of return bend.

$$A_m = \frac{3.141}{4} (D^2 - d^2)$$

Where

A_m = Cross-sectional tubing area, in.^{2}

D = Outside tubing diameter, in. = .640"

d = Inside tubing diameter, in. = .610"

$$A_m = \frac{3.141(.640^2 - .610^2)}{4} = 0.0294 \text{ in}^2$$

ALTRAN SHEET G-19
CALC NO. 96227-72-02 REV C
BY SG DATE 2/5/98
CHKD DATE 2/10/98

(3) Adequacy of return bend metal

$$W_{rb} = A_m S$$

Where

W_{rb} = Return bend allowable load, lb

A_m = Cross-sectional tubing area, in^2 = 0.0294 in.^{2}

S = Allowable return bend stress, lb/in^2 = 8880 psi

W_{rb} = 0.0294(8880) = 261 lb

Since W_{rb} = 261 lb > W_h = 58 (79.4) lb Return bend is satisfactory.

4.3.2.5 Strength of Circumferential Joint, Tube to Header

(a) Hydraulic load on tube

$W_h = 3.1416R^2P$

W_h = Hydraulic load on tube, lbs.

R = Outside radius of tube, in. = 0.3125"

P = Design pressure, psi = 200 (271) psi

W_h = 3.1416 x $(0.3125)^2$ x 200 (271)

W_h = 61.4 (83.1) lbs

Design Calculations (Double Serpentine, 90/10 Tubing & Headers)

(b) Area of braze, tube to header joint, in shear

$A_{br} = 3.1416D\ t_a$

A_{br} = area of brazed joint in shear, in.^{2}

D = outside diameter of tube, in. = 0.625"

t_a = actual thickness of header (engagement), in. = 0.207"

$A_{br} = 3.1416 \times 0.625 \times 0.207$

$A_{br} = 0.4064$ in.^{2}

ALTRAN SHEET: G-20
CALC NO. 96227-TR-03 REV. 0
BY SG DATE 2/5/98
CHKD. DATE 2/10/98

(c) Adequacy of tube to header joint

$W_j = A_{br} \times S \times E_s \times E$

W_j = allowable load on joint, lbs.

S = allowable stress in material (weakest) psi = 7760 psi

E_s = joint efficiency in shear, = 0.70

E = joint efficiency of brazed joint, related to inspection, = 0.50

$W_j = 0.4064 \times 7760 \times 0.70 \times 0.50$

W_j = 1103 lbs

(d) Mechanical strength of tube in tension

$$W_t = \frac{3.1416}{4}(D_1^2 - D_2^2) \times S_a$$

W_t = maximum tensile strength of tube, lbs.

D_1 = outside diameter of tube, in. = 0.625"

D_2 = inside diameter of tube, inc. = 0.596"

S_a = maximum allowable stress in tube, psi = 8880 psi (assumed in annealed condition after brazing)

$$W_t = \frac{3.1416}{4}(0.625^2 - 0.596^2) \times 8880$$

W_t = 246 lbs

Strength of joint — Strength of tube — Hydraulic load

$W_j > W_t > W_h$

1103 > 246 > 61.4 83.1

and tube to tube sheet joint meets requirements.

4.4 Strength of Plug Couplings

4.4.1 Threads of coupling are in conformance with ANSI B2.1-1968; therefore, per Paragraph ND-3361.3(a) coupling threads are acceptable.

4.4.2 Coupling Thickness Requirement

(1) By Paragraph ND-3324.3(a) Circumferential Stress

$$t = \frac{PR}{SE - .6P}$$

Where

P = Coupling design pressure, lb/in^2 = 200 psi 271

R = Inside Radius of coupling, in. = 0.9956/2 = 0.4978"

S = Allowable coupling stress, lb/in^2, = 9200 psi

E = Joint efficiency, seamless, = 1.0

$$t = \frac{200(.4978)}{9200(1.0) - .6(200)}$$ 271 271

= 0.0109" 0.015"

ALTRAN SHEET G-21
CALC NO. 96227-TR-03 REV 0
BY SG DATE 2/5/98
CKD DATE 2/10/98
DBS 12/2/00

(2) By Paragraph ND-3324.3(b) Longitudinal Stress

$$t = \frac{PR}{2SE + .4P}$$

$$= \frac{200(.4978)}{2(9200)(1.0) + .4(200)}$$ 271 271

= 0.00538" 0.0073"

Since coupling wall is 0.231, coupling meets design criteria.

4.4.3 Strength of Circumferential Joint of Plug Couplings

(1) Hydraulic Load on Coupling

$$W_h = \frac{3.141}{4} D^2 P$$

Where

D = Coupling outside diameter, in = 1.458"

P = Design pressure, lb/in^2 = 200 psi 271

$$W_h = \frac{3.141\ (1.458)^2}{4} (200)$$ 271 = 334.7 452.5 lbs

Design Calculations (Double Serpentine, 90/10 Tubing & Headers)

(2) Area of Brazed Joint in Shear

$$A_{br} = 3.141\ (t_r)\ D$$

Where

A_{br} = Area brazed joint in shear, in^2

t_r = Thickness of end closure, actual, in = .375"

D = Coupling outside diameter, in = 1.458"

$$A_{br} = 3.141\ (.375)(1.458)$$
$$= 1.717\ in^2$$

DSB 12/21/00

ALTRAN SHEET: G-22
CALC NO. 96227-TR-03 REV. 00
BY: SG DATE 2/5/98
CKD DSB DATE 2/10/98

(3) Adequacy of coupling to end closure joint

$$W_j = A_{br} \times S \times E_s \times E$$

Where

A_{br} = Area brazed joint in shear, in^2

S = Allowable stress in weakest material, lb/in^2 = 8880 psi

E_s = Joint efficiency in shear, = 0.70

E = Joint efficiency related to inspection, 0.50

$$W_j = (1.717)8880\ (.7)(.5)$$
$$= 5336\ lb$$

And since $W_j = 5336 > W_h = 334$ 452.5, brazed joint of coupling to end closure is adequate.

Design Calculations (Double Serpentine, 90/10 Tubing Headers)

4.4.4 Reinforcement required for couplings per Paragraph ND-3333(b)(1)

$t_r = d\sqrt{2CP/S}$

NOTE: From 271 psig is ONE TIME PEAK CONDITION USE 1.5 x 8880 = 15984 psi

Where

t_r = required thickness, in

d = inside diameter of shell, in. = 3.086"

P = Design pressure, psi = 200 271

C = 0.3 as defined under paragraph 4.2.1

S = Allowable Stress at temperature, psi = 8880 15984 psi

$t_r = 3.086\sqrt{\frac{2(.3)200}{8880}}$ 271 15984

= 0.358" .311"

Actual thickness = 0.375", so adequate reinforcement exists and opening meets requirements.

4.5 Header Nozzle

ALTRAN SHEET: G-23
CALC NO. 96227-TR-03 REV. 0
BY SG DATE 2/5/98
CKD DATE 2/10/98

4.5.1 $t_r = \frac{PR}{SE - 0.6P}$

Where

t_r = Required thickness, in.

P = Design pressure, psi = 200 271

R = Inside nozzle radius, in. = 1.543

S = Allowable stress at temperature, psi = 15,000

E = Joint efficiency, = 1.0 (seamless)

$t_r = \frac{200(1.543)}{15{,}000(1.0) - 0.6(200)}$ 271

= 0.0207" 0.0282"

Actual thickness = 0.207" min. so stub nozzle meets requirements.

4.5.2 Area of required reinforcement

$A = d \times t_r \times F$

A = Area of required reinforcement, in.^{2}

d = Inside diameter of nozzle, in. = 3.086"

t_r = required wall thickness of header, in. = 0.0705"

F = 1.00

A = 3.086 x 0.0705 x 1.00

A = 0.2175 in^2

Design Calculations (Double Serpentine, 90/10 Tubing & Headers)

4.5.3 Area of reinforcement available

$A_{1a} = (E_1\ t - F\ t_r)\ d$, or

$A_{1b} = (E_1\ t - F\ t_r)\ (t_n + t)2$, whichever is greater

E_1 = joint efficiency of seam through which any part of the nozzle passes = 1.00

t = nominal thickness of vessel wall, in. = 0.207"

R_n = inside radius of nozzle, in. = 1.543"

F_1, d, and t_r; see paragraph 4.2.1 above

ALTRAN SHEET G-24
CALC NO 96227-TR-03 REV 0
BY SG DATE 2/5/98
CKD DATE 2/10/98

$A_{1a} = (1.00 \times 0.207 - 1.00 \times 0.0705)\ 3.086$

$A_{1a} = 0.4212\ in^2$

$A_{1b} = (1.00 \times 0.207 - 1.00 \times 0.0705)\ (0.207 + 0.0705)2$

$A_{1b} = 0.0757\ in.^2$

Since $A_{1a} > A_{1b}$, use $A_{1a} = 0.4212\ in.^2 = A_1$

$A_{2a} = (t_n - t_{rn})\ 5t$ or

$A_{2b} = (t_n - t_{rn})\ 5t_n$ whichever is less

t_n = nominal thickness of nozzle wall, in. = 0.207"

t_{rn} = required thickness of nozzle wall, in. = 0.0207

t, see paragraph 4.5.2 above

$A_{2a} = (0.207 - 0.0207)\ 5 \times 0.207$

$A_{2a} = 0.1928\ in^2$

$A_{2b} = (0.207 - 0.0207)\ 5 \times 0.207$

$A_{2b} = 0.1928\ in.^2$, and $A_{2a} = A_{2b}$ so use either

$A_3 = (t_n - C)\ 2h$

C = corrosion allowance, in. = 0

h = projection of nozzle beyond inner surface of header, in. = 0

t_n, see above this para.

Design Calculations (Double Serpentine, 90/10 Tubing & Headers)

ALTRAN SHEET G-25
CALC NO 962221-TR-03 REV 0
BY SG DATE 2/5/98
CKD DATE 2/10/98

$A_3 = (0.207 - 0) \times 2 \times 0$

$A_3 = 0$ in.^{2}

A_4 = area of welds; since no welds are used,

$A_4 = 0$

To determine if nozzle is properly reinforced the following must be met

$A_1 + A_2 + A_3 + A_4 \geq A$

$0.4212 + 0.1928 + 0 + 0 \geq 0.2166$

$0.614 \geq 0.2166$ and opening is adequately reinforced

4.5.4 Load required to be carried by brazed joint; par. ND-3335.1(a) and Par. ND-3336.1(b)

$W = (A - A_1)\ S$

W = load to be carried on welds (if any) or additional reinforcement provided, lbs.

S = allowable stress, psi = 7760 psi (joint factor = 1.00)

Values for A and A_1, are given in paragraph 4.5.2 and 4.5.3

$W = (0.2166 - 0.4212)\ 7760$
$W = -0.2046 \times 7760$
W = -1587 indicating no other reinforcement of header (shell) is needed, and that no load on the brazed joint is necessary to support the shell

4.5.5 Unit stresses Par. ND-3359 (b)

Fillet weld in shear - not applicable
Groove weld in tension - not applicable
Nozzle wall shear = 0.70 x 15,000 = 10,500
*Brazed joint in tension = 1.00 x 7760 = 7760 psi
*Brazed joint in shear = 0.70 x 7760 = 5432 psi
*Fully examined

4.5.6 Strength of connecting elements

(1) Fillet weld in shear - not applicable

(2) Nozzle-wall shear

Design Calculations (Double Serpentine, 90/10 Tubing & Headers

$= \frac{3.1416}{2}$ x mean nozzle diameter x t_n x 10,500

$= 1.571 \times \frac{3.50 + 3.086}{2} \times 0.207 \times 10{,}500$

$= 1.571 \times 3.293 \times 0.207 \times 10{,}500$

$= 11{,}243$ lbs

ALTRAN SHEET G-26
CALC NO 1622-7-70 REV C
BY SG DATE 2/5/98
CKD DSG DATE 2/10/98

(3) Brazed joint in tension

$= \frac{3.1416}{2}$ x nozzle O.D. x brazed depth x 7760

$= 1.571 \times 3.50 \times 0.207 \times 7760$

$= 8832$ lbs

4.5.7 Possible paths of failure

(1) Through nozzle wall shear = 11,243 lbs

(2) Through brazed joint in tension = 8832 lbs

The associated strength of both possible paths of failure exceed the load required to be carried by the brazed joint 4.5.4 in reinforcing the header.

Therefore, the nozzle attachment to the header (shell) meets the requirements for a reinforced opening, Section III, Class 3.

4.6 Bolting Flange on Nozzle

The bolting flange used with the nozzle connection on the header meets the requirements of A.N.S.I. B16.5-1973 as a Lapped Joint Connecting Flange of the raised face type. The design geometry meets the requirements of B16.5 and the dimensions conform with those listed in Table 9 of B16.5 for the pressure temperature rating.

The application of this bolting flange is in conformity with paragraph ND-3362(a) of Section III, Class 3.

NESE 255-1

ALTRAN	SHEET G-27
CALC NO 96227-TR-03	REV 0
BY SG	DATE 2/5/98
CKD	DATE 2/10/98

1. INTRODUCTION:

The purpose of this supplement is to justify, in accordance with the ASME Code, use of copper-silicon per material specification ASME SB-98, UNS C65100 as the end cap material for closure of the pipe headers of American Air Filter's cooling coils. This material has been selected as the standard end cap material under AAF's Nuclear Inventory Standardization Program. Some materials used in the past for this purpose are no longer available.

Each of the numbered sections following correspond to the same section in NESE 255, and entirely supercede that section. This supplement must therefore be read in conjunction with NESE 255.

3.2 End Caps

Bar, specification SB-98, UNS 65100 temper 060. Allowable stress based on interpolation at 320°F = 6330 psi (TABLE I-8.4)

3.4 Delete.

4.2 End Caps

4.2.1 Required Thickness of End Closure

Figure ND-3325-1, Unstayed Flat Head, para. ND-3325.2 as applicable.

$t_r = d\ (CP/S)^{.5}$: Equation (1) para. ND-3325.2 (b)

C = 0.5 Para. ND-3325.3, Figure ND-3325.1 (h) (see note 1)

$t_r = d\ (CP/S)^{.5}$

t_r = required thickness, in.

d = inside diameter of shell, in. = 3.086"

C = 0.50

P = design pressure, psi = 200 psi (271)

S = allowable stress at temperature, psi = 6330 psi (6760 @ 306°F)

$t_r = 3.086\ (0.5 \times 200/6330)^{.5}$ (271 / 6760)

t_r = 0.388 (0.437")

Actual thickness = 0.4375" so end closure meets requirements.

4.2.2 Strength of Circumferential Joint for End Closure

ALTRAN SHEET G-28
CALC NO 96227-TR-05 REV 0
BY SG DATE 2/5/98
CKD DATE 2/10/98

(a) Hydraulic load on end closure

$W_h = 3.1416R^2P$

W_h = hydraulic load on end closure, lbs.

R = inside radius of header, in. = 1.543"

P = design pressure, psi = 200 271 psi

$W_h = 3.1416 \times (1.543)^2 \times 200$ 271

W_h = 1496 2027 lbs.

(b) Area of end closure brazed joint in shear

$A_{br} = 3.1416D\ t_r$

A_{br} = area of brazed joint in shear, in.^{2}

D = outside diameter of end closure, in. = 3.125

t_r = actual thickness of end closure, in. = 0.4375

$A_{br} = 3.1416 \times 3.125 \times 0.4375$

A_{br} = 4.295 in.^{2}

(c) Adequacy of end closure joint

$W_j = A_{br} \times S \times E_s \times E$

W_j = allowable load on joint, lbs.

S = allowable stress in material (weakest) psi = 6330 psi

E_x = joint efficiency in shear, = 0.70

E = joint efficiency of brazed joint, related to inspection, = 0.50

$W_j = 4.295 \times 6330 \times 0.70 \times 0.50$

ALTRAN SHEET: G-29
CALC NO. 96277-TR-03 REV. 0
BY SG DATE 2/5/98
CKD DSB DATE 2/10/98

NESE 255-1

W_j = 9515 lbs.

Since W_j (9515) is greater than W_h (1496) 2027, brazed joint of end closure meets requirements.

4.4 Delete existing paragraph and substitute:

Strength of Threads in Vents & Drain Fittings

Thread in fittings are in conformance with ANSI B2.1-1968; therefore, per paragraph ND-3361.3(a), threads are acceptable.

Note 1: This figure depicts the joint design of the end closure under consideration, but the referenced "category C" weld note is not applicable since a brazed joint is employed in the coil construction.

ATTACHMENT H

INTEGRAL WELDED ATTACHMENT EVALUATION

Calculation Sheet

altran

Calc. No. 96227-TR-03 By: [illegible] Date: 12/12/00 Sheet H2

Rev. No. 1 Chk: J. Bonn Date: 12/13/00

Reference

Attachment H Integral Welded Attachments (IWA)

The hangers listed in Table H-1.0 are supports with integral welded attachments. The 5 IWA's are evaluated on the following pages. The Altra Lug Computer Program [20] is used to analyze the welded attachments.

Table H-1.0 Integral Welded Attachments

Train	Hanger No. (N.P.)	Direction	Deadload (lbs.)	Thermal Accident (lbs.)	Column Closure (lbs.)	Condensation Induced (lbs.)
'A' Return Line	C017 (1540) 14" Pipe (Similar to C009 Train 'B')	Fx	-273	4472	-2957	-2458
		Fy (Axial)	-5554	835	8493	-390
		Fz	-141	3979	-1533	-1376
		Code Stress	(EQ. 8) 2199 psi	(EQ. 10) 4818 psi	(EQ. 9) 4619 psi	(EQ. 9) 3776 psi
'B' Return Line	C009 (117) 10" Pipe	Fx	12	29	-3062	-3829
		Fy	-1665	197	-1176	-4122
		Fz	-136	999	-5045	4939
		F_{Axial}	62	-351	-1606	-2832
		Code Stress	(EQ. 8) 2337 psi	(EQ. 10) 621 psi	(EQ. 9) 4243 psi	(EQ. 9) 6238 psi
	R007 (217) X-Snubber 10" Pipe	Fx	0	0	1485	-406
		Code Stress	(EQ. 8) 4731 psi	(EQ. 10) 711 psi	(EQ. 9) 8006 psi	(EQ. 9) 5087 psi
	C021 (347) 10" Pipe	Fx	67	871	696	846
		Fy (Axial)	-3863	4317	2244	-619
		Fz	34	605	343	-41
		Code Stress	(EQ. 8) 1609 psi	(EQ. 10) 2528 psi	(EQ. 9) 2542 psi	(EQ. 9) 2034 psi
	R013 (409) X-Snubber 6" Pipe	Fx	0	0	676	-8
		Code Stress	(EQ. 8) 1808 psi	(EQ. 10) 1535 psi	(EQ. 9) 2065 psi	(EQ. 9) 1821 psi

Reference: Attachments A & B of this technical report

Calculation Sheet

altran

Calc. No. 94100-C-02 By: RWS Date: 4-4-95 Sheet C3

Rev. No. 0 Chk: RDF Date: 4.13.95

Reference

THE e VALUE FOR MOMENT DETERMINATION IS CALCULATED AS FOLLOWS:

Altran Report 96227-TR-03 Rev. 1 Att./Appx. H Sh. H4

1

12/12/00

H409 R013

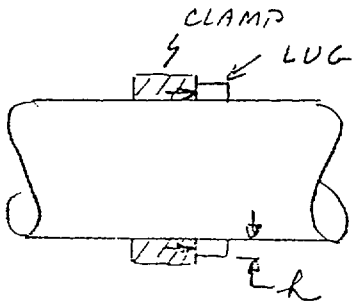

$h = 1''$

$e = h/2 = 0.5''$

C009, C021

~~Altran Report~~ ~~Rev.~~ ~~Att./Appx~~ ~~Sh~~

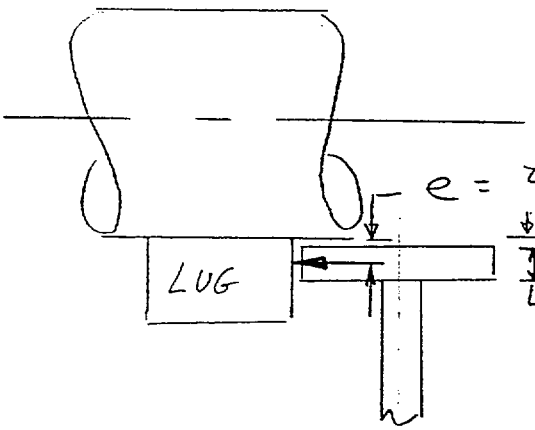

$e = t_f/2 + .063 = \frac{.365}{2} + .063 = .246''$

USE $.25''$

WOLF CREEK NUCLEAR OPERATING CORPORATION		CALCULATION / ANALYSIS SHEET
STATION / UNIT Wolf Creek Nuclear Plant	CALCULATION NO. 96227-TR-03, Rev. 1 ATTACHMENT H	PAGE H-5 OF ~~H-~~
PREPARER / DATE: [illegible] 12/18/00	REVIEWER / DATE: J. [illegible] 12/18/00	
SUBJECT OF COMPUTATION: Trans B Hanger Corr		MOD. NO / PROJ. NO.
		COMPONENT DESCRIPTION:

Reference

AltraLug Version 1.1 Copyright (c) 1995 Altran Corporation Filename C009_TRB.MCD

Lug on Straight Pipe - Input Parameters

This program was verified in accordance with the Altran Quality Assurance Manual, this document develops local stresses in straight pipe due to a rectangular welded attachment in accordance with Altran document 92117-C-01, Rev. 2 .

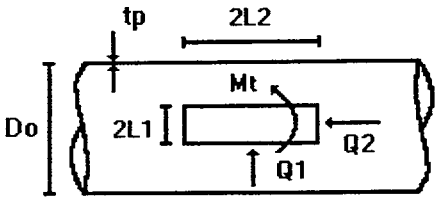

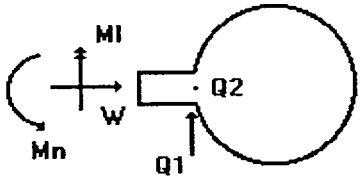

Input Values (Key Down)

Pipe Properties: Lug Properties:

Diameter $Do := 10.75 \cdot in$ $L1 := 1.25 \cdot in$

Thickness $tp := 0.365 \cdot in$ $L2 := 1.875 \cdot in$

Weld Type (WT): Weld Size (tw):

1 = Fillet Weld
2 = Full or Partial Penetration Weld

$tw := 0.25 \cdot in$

$WT := 1$

Weld Configuration (WC):

2 = Welded on Two Sides,
3 = Welded on Three Sides
4 = Welded on Four Sides

$WC := 3$

Note: Enter WC:=4 for Full Penetration Weld

Lug Loads (at the lug/pipe interface):

Design	Upset	Faulted	Thermal
$W_{sl} := 0 \cdot lbf$	$W_u := 0 \cdot lbf$	$W_f := 0 \cdot lbf$	$W_e := 0 \cdot lbf$
$Q1_{sl} := 0 \cdot lbf$	$Q1_u := 0 \cdot lbf$	$Q1_f := 0 \cdot lbf$	$Q1_e := 0 \cdot lbf$
$Q2_{sl} := 62 \cdot lbf$	$Q2_u := 0 \cdot lbf$	$Q2_f := 2894 \cdot lbf$	$Q2_e := 351 \cdot lbf$
$Mt_{sl} := 0 \cdot lbf \cdot in$	$Mt_u := 0 \cdot lbf \cdot in$	$Mt_f := 0 \cdot lbf \cdot in$	$Mt_e := 0 \cdot lbf \cdot in$
$Ml_{sl} := 31 \cdot lbf \cdot in$ *	$Ml_u := 0 \cdot lbf \cdot in$	$Ml_f := 1447 \cdot lbf \cdot in$ *	$Ml_e := 176 \cdot lbf \cdot in$ *
$Mn_{sl} := 0 \cdot lbf \cdot in$	$Mn_u := 0 \cdot lbf \cdot in$	$Mn_f := 0 \cdot lbf \cdot in$	$Mn_e := 0 \cdot lbf \cdot in$

* Conservative, used offset of ½", actual is ¼". [illegible] 12/18/00

Piping Stress Analysis Information: $S_{sl} := 2337 \cdot psi$ $S_u := 0 \cdot psi$ $S_f := 6238 \cdot psi$

Material Allowables: Pipe Material Lug Material $S_e := 621 \cdot psi$

	Pipe Material	Lug Material
Hot Allowable	$SH_0 := 15000 \cdot psi$	$SH_1 := 16200 \cdot psi$
Cold Allowable	$SC_0 := 15000 \cdot psi$	$SC_1 := 16200 \cdot psi$
Yield Strength	$SY_0 := 35000 \cdot psi$	$SY_1 := 35000 \cdot psi$

End of Input

WOLF CREEK NUCLEAR OPERATING CORPORATION		CALCULATION / ANALYSIS SHEET
STATION / UNIT Wolf Creek Nuclear Plant	CALCULATION NO. 96227-TR-03, Rev. 1 ATTACHMENT H	PAGE H- 6 OF ~~H~~
PREPARER / DATE 12/18/00	REVIEWER / DATE: 12/18/00	
SUBJECT OF COMPUTATION: Train B Hanger C009		MOD. NO / PROJ. NO.
		COMPONENT DESCRIPTION:

Reference

AltraLug Version 1.1 Copyright (c) 1995 Altran Corporation

Lug on Straight Pipe - Calculated Parameters

Geometric Parameters:

$\gamma = 14.226$ $\beta 1 = 0.241$ $\beta 2 = 0.361$

$La = 0.365 \cdot in$ $Lb = 0.365 \cdot in$ $Lc = 1.25 \cdot in$ $Ld = 1.875 \cdot in$

$Al = 9.375 \cdot in^2$ $Zll = 5.859 \cdot in^3$ $Zln = 3.906 \cdot in^3$

Thrust Parameters:

$Ao_t = 2.2$ $\theta_t = 40 \cdot deg$ $Xo_t = 0$ $Yo_t = 0.05$

$X1_t = -0.618$ $Y1_t = -0.392$ $\eta_t = 0.722$

Longitudinal Parameters:

$Ao_l = 2$ $\theta_l = 50 \cdot deg$ $Xo_l = -0.45$ $Yo_l = -0.55$

$X1_l = -1.068$ $Y1_l = -0.992$ $\eta_l = 1.431$

Circumferential Parameters:

$Ao_n = 1.8$ $\theta_n = 40 \cdot deg$ $Xo_n = -0.75$ $Yo_n = -0.6$

$X1_n = -1.368$ $Y1_n = -1.042$ $\eta_n = 1.715$

Stress Indices:

$B_t = 20.85$ $B_l = 5.914$ $B_n = 10.292$

$C_t = 31.274$ $C_l = 8.872$ $C_n = 15.438$

Weld Parameters

$Aw_{WC} = 1.767 \cdot in^2$ $Zwn_{WC} = 1.841 \cdot in^3$ $J_{WC} = 5.02 \cdot in^4$

$Zwl_{WC} = 1.16 \cdot in^3$ $Zwt_{WC} = 2.668 \cdot in^3$ $Cw_{WC} = 1.881 \cdot in$

WOLF CREEK NUCLEAR OPERATING CORPORATION		CALCULATION / ANALYSIS SHEET
STATION / UNIT Wolf Creek Nuclear Plant	CALCULATION NO. 96227-TR-03, Rev. 1 ATTACHMENT H	PAGE H-7 OF ~~H~~
PREPARER / DATE DSG 12/15/00	REVIEWER / DATE: J. Brown 12/18/00	
SUBJECT OF COMPUTATION: Train B Hanger C009		MOD. NO / PROJ. NO.
		COMPONENT DESCRIPTION:

Reference

AltraLug Version 1.1 Copyright (c) 1995 Altran Corporation

Lug on Straight Pipe - Limitations and Local Stresses

Limitations of Applicability

Review Yes/No
Check Lines

(1) The long side of the lug (2xL2) must be at least three times the length of the short side (2xL1).

Limit1 = 0 (1 = OK, 0 = Not Acceptable) OK, smaller profile on pipe surface DSG 12/15/00

(2) Attachment and pipe material moduli of elasticity and coefficients for thermal expansion must be essentially the same. Yes ✓ No___

(3) Geometric Parameter Limitations

(a) Beta1 < 0.5 $\beta 1 = 0.241$

Limit3a = 1 (1 = OK, 0 = Not Acceptable)

(b) Beta2 < 0.5 $\beta 2 = 0.361$

Limit3b = 1 (1 = OK, 0 = Not Acceptable)

(c) Beta1 x Beta2 < 0.075 $\beta 1 \cdot \beta 2 = 0.087$ OK, slightly outside limit DSG 12/15/00

Limit3c = 0 (1 = OK, 0 = Not Acceptable)

(4) No other attachment shall occur within the following distance Yes ✓ No___

Limit4 = 1.377 in

(5) Pipe diameter to thickness ratio (Do/tp < 100) $\frac{Do}{tp} = 29.452$

Limit5 = 1 (1 = OK, 0 = Not Acceptable)

ARE ALL LIMITATIONS ACCEPTABLE? Yes ✓ No___

Note: If any of the above limitations are unacceptable refer to the User Manual, Section 4.0 for assistance.

Local Pipe Wall Stresses

$Sml_{sl} = 77\,psi$ $Sml_u = 0\,psi$ $Sml_f = 3575\,psi$

$Spl = 1883\,psi$ $Snl = 523\,psi$ $Snl'' = 4828\,psi$

AltraLug Version 1.1 Copyright (c) 1995 Altran Corporation

Lug on Straight Pipe - Code Evaluation

Design ($S_{sl} + S_{ml} < Sh$)

$S_{sl} + Sml_{sl} = 2414 \cdot psi$ $\qquad$ $Sh = 15000 \cdot psi$

$Eq8 = 1$ (1 = OK, 0 = Not Acceptable)

Upset ($S_u + S_{ml} <$ 1.2 Sh)

$S_u + Sml_u = 0 \cdot psi$ $\qquad$ $1.2 \cdot Sh = 18000 \cdot psi$

$Eq9_u = 1$ (1 = OK, 0 = Not Acceptable)

Faulted ($S_f + S_{ml} <$ 1.8 Sh)

$S_f + Sml_f = 9813 \cdot psi$ $\qquad$ ~~1.8~~ 2.4 $Sh = \cancel{27000} \cdot psi$ 36,000 DSB 12/18/00

$Eq9_f = 1$ (1 = OK, 0 = Not Acceptable)

Thermal ($S_e + S_{pl}/2 <$ Sa)

$S_e + \frac{Spl}{2} = 1562 \cdot psi$ $\qquad$ $Sa = 22500 \cdot psi$

$Eq10 = 1$ (1 = OK, 0 = Not Acceptable)

Design plus Thermal ($S_{sl} + S_e + S_{ml} + S_{pl}/2 <$ (Sa + Sh))

$S_{sl} + S_e + Sml_{sl} + \frac{Spl}{2} = 3976 \cdot psi$ $\qquad$ $Sa + Sh = 37500 \cdot psi$

$Eq11 = 1$ (1 = OK, 0 = Not Acceptable)

AltraLug Version 1.1 Copyright (c) 1995 Altran Corporation

Lug on Straight Pipe - Lug Evaluation

Additional Equation (Snl'' < 2.0 Sy)

$Snl'' = 4828 \cdot psi$ $\qquad$ $2.0 \cdot Sy = 70000 \cdot psi$

$Ad1 = 1$ (1 = OK, 0 = Not Acceptable)

Additional Equation (Q1''/2L1La + Q2''/2L2Lb + Mt''' < Sy)

$$\frac{Q1''}{2 \cdot L1 \cdot La} + \frac{Q2''}{2 \cdot L2 \cdot Lb} + Mt''' = 2371 \cdot psi \qquad Sy = 35000 \cdot psi$$

$Ad2 = 1$ (1 = OK, 0 = Not Acceptable)

The following additional equations require satisfaction for weld stresses

$$\frac{W''}{Aw_{WC}} + \frac{Ml''}{Zwl_{WC}} + \frac{Mn''}{Zwn_{WC}} + \frac{2 \cdot (Q1'' + Q2'')}{Aw_{WC}} + \frac{Mt''}{Zwt_{WC}} = 5071 \cdot psi$$

$2 \cdot Sy = 70000 \cdot psi$

$Ad3 = 1$ (1 = OK, 0 = Not Acceptable)

$$\left[\left(\frac{W''}{Aw_{WC}}\right)^2 + 4 \cdot \left(\frac{Q1'' + Q2''}{Aw_{WC}} + \frac{Mt''}{Zwt_{WC}}\right)^2\right]^{0.5} = 3672 \cdot psi \qquad Sy = 35000 \cdot psi$$

$Ad4 = 1$ (1 = OK, 0 = Not Acceptable)

WOLF CREEK NUCLEAR OPERATING CORPORATION		CALCULATION / ANALYSIS SHEET
STATION / UNIT Wolf Creek Nuclear Plant	CALCULATION NO. 96227-TR-03, Rev. 1 ATTACHMENT H	PAGE H-10 OF ~~H~~
PREPARER / DATE: DEG 12/11/00	REVIEWER / DATE: J. Bu 12/18/00	
SUBJECT OF COMPUTATION: Train B Hanger C009		MOD. NO / PROJ. NO.
		COMPONENT DESCRIPTION:

Reference

AltraLug Version 1.1 Copyright (c) 1995 Altran Corporation

Trunnion on Straight Pipe - Trunnion Evaluation

SUMMARY

1)- Limitations of applicability

Are all limitations acceptable ? Yes ✓ No____

2)- Code evaluation $j := 0..8$

$Calc_Stress_j :=$	$Allow_Stress_j :=$	$Equ_j :=$
$S_{sl} + Sml_{sl}$	Sh	Eq8
$S_u + Sml_u$	1.2·Sh	$Eq9_u$
$S_f + Sml_f$	1.8·Sh	$Eq9_f$
$S_e + \frac{Spl}{2}$	Sa	Eq10
$S_{sl} + S_e + Sml_{sl} + \frac{Spl}{2}$	Sa + Sh	Eq11
Snl''	2·Sy	Ad1
$\frac{Q1''}{2 \cdot L1 \cdot La} + \frac{Q2''}{2 \cdot L2 \cdot Lb} + Mt'''$	Sy	Ad2
$\frac{W''}{Aw_{WC}} + \frac{Ml''}{Zwl_{WC}} + \frac{Mn''}{Zwn_{WC}} + \frac{2 \cdot (Q1'' + Q2'')}{Aw_{WC}} + \frac{Mt''}{Zwt_{WC}}$	2·Sy	Ad3
$\left[\left(\frac{W''}{Aw_{WC}}\right)^2 + 4 \cdot \left(\frac{Q1'' + Q2''}{Aw_{WC}} + \frac{Mt''}{Zwt_{WC}}\right)^2\right]^{0.5}$	Sy	Ad4

Code Equations Calculated Stress Allowable Stress Acceptance

$Equ_j :=$

	Calc_Stress =	Allow_Stress =	Equ =
Eq8	2414	15000	1
$Eq9_u$	0	18000	1
$Eq9_f$	9813	27000	1
Eq10	1562	22500	1
Eq11	3976	37500	1
Ad1	4828	70000	1
Ad2	2371	35000	1
Ad3	5071	70000	1
Ad4	3672	35000	1

$\cdot psi$ $\cdot psi$

Reference

AltraLug Version 1.1 Copyright (c) 1995 Altran Corporation

Trunnion on Straight Pipe - Trunnion Evaluation

3)- Filename and file lock date

Match the filename and the lock date in the authentication index ? Yes ✓ No___

THIS COMPUTERIZED CALCULATION HAS BEEN CONFIRMED BY:

[X] DETAILED CHECKING OF ALL FORMULATION

[ ] COMPARISON TO AN IDENTICAL VERIFIED FILE IN:

_____ BY: J. Bren DATE: 12/18/00

_APL.MCD

ITEM NO	NO REQ'D	PART NO	SIZE	DESCRIPTION	MATERIAL
1	1		W6x20 3'-9" LG.	(BY M-216 SUPPLIER)	
2	1		W6x20 2'-9" LG.		
3	1		W6x20 2'-4" LG.		
4	2		W6x20 10 7/8" LG.		
5	2		∠ 3x3x3/8 4" LG.		
6	4		1/4"x2 5/8"x5 7/16"	BAR	
7	4		1 1/4x2 1/2x3 3/4	LUG	SA515 GR65
8	1		1/2"x3 5/8"x19 11/16"	PLATE	SA515 GR65
9	1		1/2"x3 5/8"x6 1/16"	PLATE CUT PER DETAIL	SA515 GR65
10	1		1/2"x3 5/8"x16 1/8"	PLATE CUT PER DETAIL	SA515 GR65
11	2		W4x13 4'-1" LG.		
12	2		1/2"x4"x19 3/16"	PLATE	SA515 GR65
13	1		W4x13 16 1/2 "LG		

Altran Report
96227-TR-03 Rev. 0
Att./Appx. H Sh H12

Return B

FORCES #	LATERAL	FT	AXIAL
POS.	2750	1100	8350
NEG.	3100	3800	7400

MVMTS. 11	X	Y	Z
THERMAL			
SEISMIC			

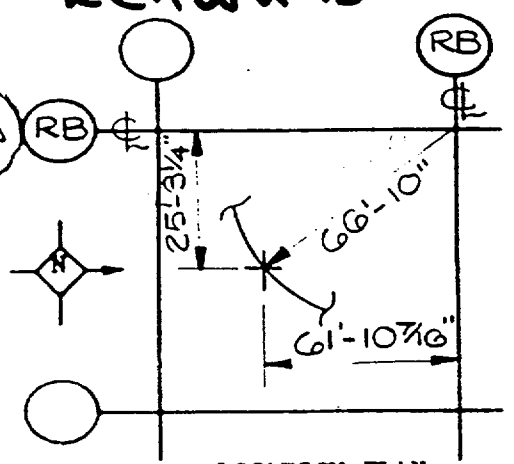

LOCATION PLAN
AREA 2

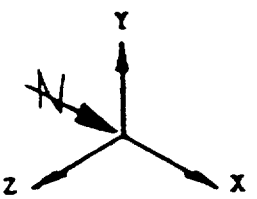

PROBLEM NO. 201 STRESS NO. —

ISSUE 1 4

DATA PT. 117 NUCLEAR CLASS 3

NOTE: All welds for nuclear supports to be visually inspected unless noted otherwise

REV.	DATE	REVISIONS	BY	CH'K	DESIGN SUPVR	ENG'R	PROJ. ENG'R	APPR
△								
4	11/23/81	REV. REF. DWG'S. LOADS & ISSUE. NO.	MT					
3	8/5/80	ISSUED FOR CONSTRUCTION						

SNUPPS

DRAWING NO. M-06GN02

BECHTEL GAITHERSBURG

REF. DWGS. ISO M-03GN02 REV 6 PIPE 4 STEEL C-05242J REV 8

PIPE SUPPORTS
CONTAINMENT COOLING SYSTEM
REACTOR BUILDING TRAIN "B"

JOB. NO.	HANGER NO.	REV.
10466	0-GN02-C009/242(Q) SHT. 1 OF 5	4

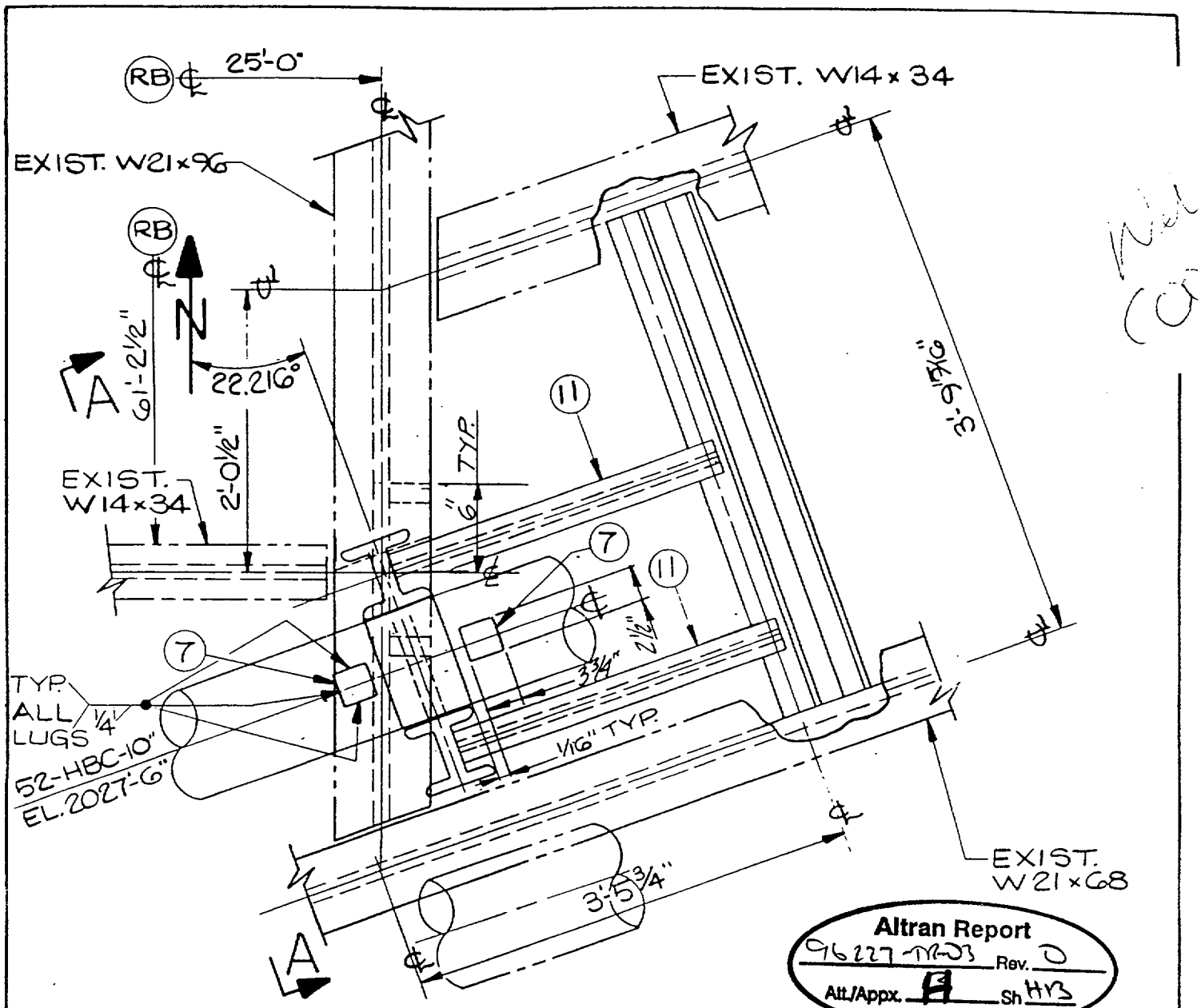

Altran Report
96227-TR-03 Rev. 0
Att./Appx. A Sh. HR3

Return B

PLAN VIEW AT EL. 2028'-6"

REV.	DATE	REVISIONS	BY	CH'K	DESIGN SUPVR	ENG'R	PROJ. ENG'R	APPR
△								
△	11/23/87	REV. REF. DWG'S.	MT	DL	BJ	BJ		
△	9/3/87	ISSUED FOR CONSTRUCTION	RDM	JB	BJ	BJ		

SNUPPS	BECHTEL GAITHERSBURG	REF. DWGS.	ISO M-03GN02 REV 6
DRAWING NO. M-06GN02			PIPE
			STEEL C-OS2421 REV 8
PIPE SUPPORTS CONTAINMENT COOLING SYSTEM REACTOR BUILDING TRAIN "B"	JOB. NO. 10466	HANGER NO. O-GN02-C009/242(Q) SHT. 2 OF 5	REV. 4

N47049

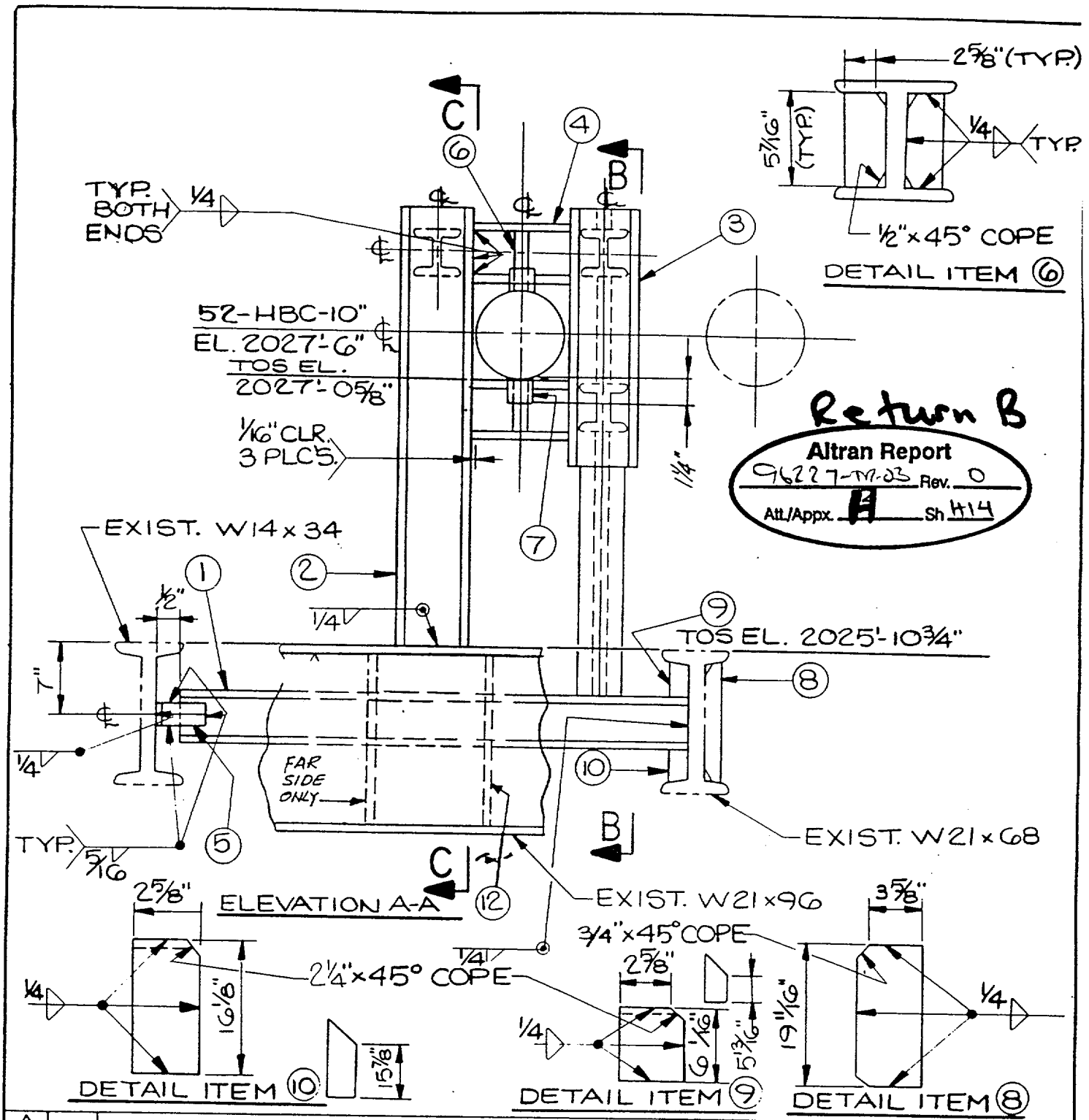

REV.	DATE	REVISIONS	BY	CH'K	DESIGN SUPV'R	ENG'R	PROJ. ENG'R	APPR
△								
▲	11/23/81	REV. REF. DWG'S.			BJ	RJ		
△	8/3/81	ISSUED FOR CONSTRUCTION	JB	BH				

SNUPPS	BECHTEL GAITHERSBURG	REF. DWGS.	ISO M-03GN02 REV 6 (4)
DRAWING NO. M-06GN02			PIPE
			STEEL C-OS2421 REV 8
PIPE SUPPORTS CONTAINMENT COOLING SYSTEM REACTOR BUILDING TRAIN "B"	JOB. NO. 10466	HANGER NO. O-GN02-C009/242(Q) SHT. 3 OF 5	REV. 4

N47049

Return B

Altran Report
96227-TR.03 Rev. 0
Att./Appx. B Sh. H15

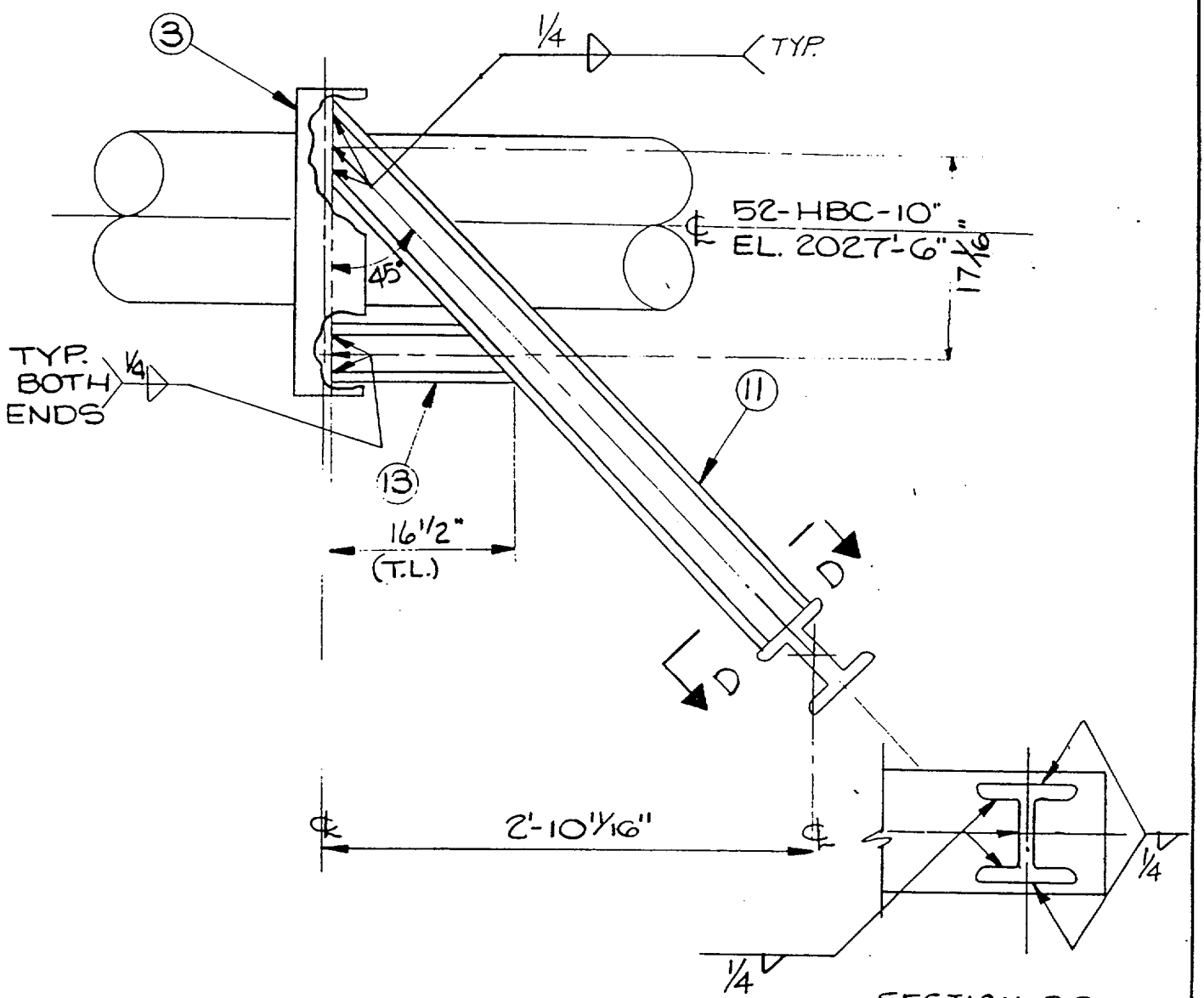

REV.	DATE	REVISIONS	BY	CH'K	DESIGN SUPV'R	ENG'R	PROJ. ENG'R	APPR
△								
▲	11/23/81	REV. REF. DWG'S	AT	DL	BH	RL		
△	8/3/78	ISSUED FOR CONSTRUCTION						

SNUPPS	BECHTEL GAITHERSBURG	REF. DWGS.	ISO M-03GN02 REV 6 (4)
DRAWING NO. M-06GN02			PIPE
			STEEL C-0S2421 REV 8
PIPE SUPPORTS CONTAINMENT COOLING SYSTEM REACTOR BUILDING TRAIN "B"	JOB. NO. 10466	HANGER NO. O-GN02-C009/242(Q) SHT. 4 OF 5	REV. 4

N47049

Return B

Altran Report
96227-M-03 Rev. 0
Att./Appx. H Sh H16

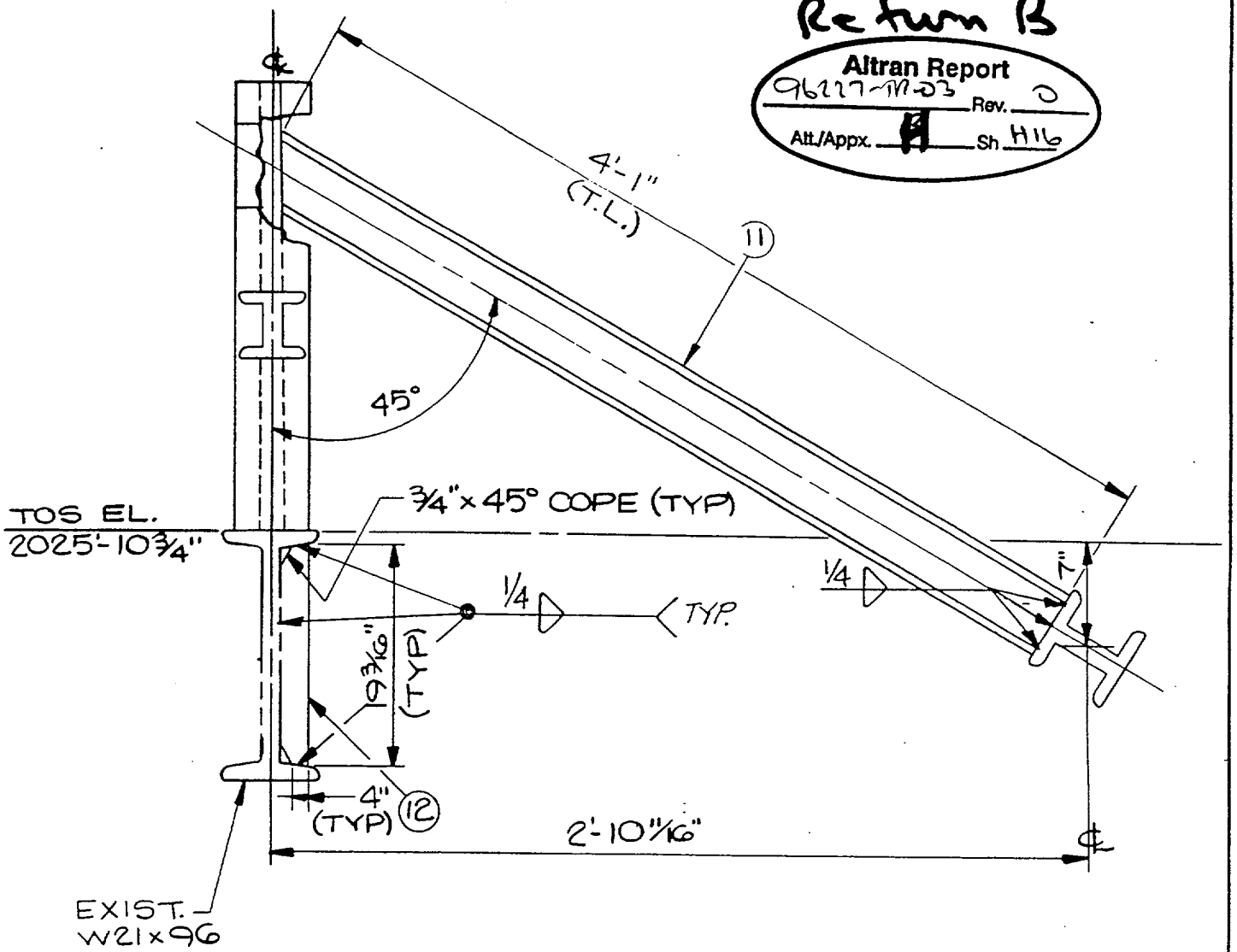

SECTION C-C

REV.	DATE	REVISIONS	BY	CH'K	DESIGN SUPV'R	ENG'R	PROJ. ENG'R	APP'R
△								
▲	11/23/81	REV. REF. DWG'S	MT					
△	8/3/81	ISSUED FOR CONSTRUCTION						

SNUPPS	BECHTEL GAITHERSBURG	REF. DWGS.	ISO M-03GN02 REV 6
DRAWING NO. M-06GN02			PIPE 4
			STEEL C-0S2421 REV 8
PIPE SUPPORTS CONTAINMENT COOLING SYSTEM REACTOR BUILDING TRAIN "B"	JOB. NO. 10466	HANGER NO. O-GN02-C009/242(Q) SHT. 5 OF 5	REV. 4

N47049

WOLF CREEK NUCLEAR OPERATING CORPORATION		CALCULATION / ANALYSIS SHEET
STATION / UNIT Wolf Creek Nuclear Plant	CALCULATION NO. 96227-TR-03, Rev. 1 ATTACHMENT H	PAGE H-17 OF H
PREPARER / DATE: 12/18/00	REVIEWER / DATE: J Bu 12/18/00	
SUBJECT OF COMPUTATION: Train A Hanger C017		MOD. NO / PROJ. NO.
		COMPONENT DESCRIPTION:

Reference

AltraLug Version 1.1 Copyright (c) 1995 Altran Corporation Filename C017_TRA.MCD

Lug on Straight Pipe - Input Parameters

This program was verified in accordance with the Altran Quality Assurance Manual, this document develops local stresses in straight pipe due to a rectangular welded attachment in accordance with Altran document 92117-C-01, Rev. 2 .

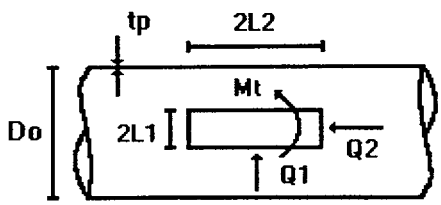

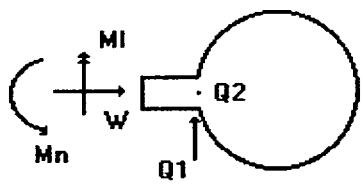

Input Values (Key Down)

Pipe Properties: Lug Properties:

Diameter $Do := 14.0 \cdot in$ $L1 := 1.25 \cdot in$

Thickness $tp := 0.375 \cdot in$ $L2 := 1.75 \cdot in$

Weld Type (WT): Weld Size (tw):

1 = Fillet Weld
2 = Full or Partial Penetration Weld $tw := 0.25 \cdot in$

$WT := 1$

Weld Configuration (WC):

2 = Welded on Two Sides,
3 = Welded on Three Sides
4 = Welded on Four Sides $WC := 3$

Note: Enter WC:=4 for Full Penetration Weld

Lug Loads (at the lug/pipe interface):

Design	Upset	Faulted	Thermal
$W_{sl} := 0 \cdot lbf$	$W_u := 0 \cdot lbf$	$W_f := 0 \cdot lbf$	$W_e := 0 \cdot lbf$
$Q1_{sl} := 0 \cdot lbf$	$Q1_u := 0 \cdot lbf$	$Q1_f := 0 \cdot lbf$	$Q1_e := 0 \cdot lbf$
$Q2_{sl} := 2777 \cdot lbf$	$Q2_u := 0 \cdot lbf$	$Q2_f := 7024 \cdot lbf$	$Q2_e := 418 \cdot lbf$
$Mt_{sl} := 0 \cdot lbf \cdot in$	$Mt_u := 0 \cdot lbf \cdot in$	$Mt_f := 0 \cdot lbf \cdot in$	$Mt_e := 0 \cdot lbf \cdot in$
$Ml_{sl} := 2777 \cdot lbf \cdot in$ *	$Ml_u := 0 \cdot lbf \cdot in$	$Ml_f := 7024 \cdot lbf \cdot in$ *	$Ml_e := 418 \cdot lbf \cdot in$ *
$Mn_{sl} := 0 \cdot lbf \cdot in$	$Mn_u := 0 \cdot lbf \cdot in$	$Mn_f := 0 \cdot lbf \cdot in$	$Mn_e := 0 \cdot lbf \cdot in$

* Conservative, used offset of 1", actual is 0.342". 12/18/00

Piping Stress Analysis Information: $S_{sl} := 2199 \cdot psi$ $S_u := 0 \cdot psi$ $S_f := 4619 \cdot psi$

Material Allowables: Pipe Material Lug Material $S_e := 4818 \cdot psi$

	Pipe Material	Lug Material
Hot Allowable	$SH_0 := 15000 \cdot psi$	$SH_1 := 16200 \cdot psi$
Cold Allowable	$SC_0 := 15000 \cdot psi$	$SC_1 := 16200 \cdot psi$
Yield Strength	$SY_0 := 35000 \cdot psi$	$SY_1 := 35000 \cdot psi$

End of Input

Reference

AltraLug Version 1.1 Copyright (c) 1995 Altran Corporation

Lug on Straight Pipe - Calculated Parameters

Geometric Parameters:

$\gamma = 18.167$ $\beta 1 = 0.183$ $\beta 2 = 0.257$

$La = 0.375 \cdot in$ $Lb = 0.375 \cdot in$ $Lc = 1.25 \cdot in$ $Ld = 1.75 \cdot in$

$Al = 8.75 \cdot in^2$ $Zll = 5.104 \cdot in^3$ $Zln = 3.646 \cdot in^3$

Thrust Parameters:

$Ao_t = 2.2$ $\theta_t = 40 \cdot deg$ $Xo_t = 0$ $Yo_t = 0.05$

$X1_t = -0.736$ $Y1_t = -0.54$ $\eta_t = 0.91$

Longitudinal Parameters:

$Ao_l = 2$ $\theta_l = 50 \cdot deg$ $Xo_l = -0.45$ $Yo_l = -0.55$

$X1_l = -1.186$ $Y1_l = -1.14$ $\eta_l = 1.621$

Circumferential Parameters:

$Ao_n = 1.8$ $\theta_n = 40 \cdot deg$ $Xo_n = -0.75$ $Yo_n = -0.6$

$X1_n = -1.486$ $Y1_n = -1.19$ $\eta_n = 1.903$

Stress Indices:

$B_t = 24.116$ $B_l = 6.304$ $B_n = 9.641$

$C_t = 36.175$ $C_l = 9.455$ $C_n = 14.462$

Weld Parameters

$Aw_{WC} = 1.679 \cdot in^2$ $Zwn_{WC} = 1.731 \cdot in^3$ $J_{WC} = 4.423 \cdot in^4$

$Zwl_{WC} = 1.022 \cdot in^3$ $Zwt_{WC} = 2.463 \cdot in^3$ $Cw_{WC} = 1.796 \cdot in$

AltraLug Version 1.1 Copyright (c) 1995 Altran Corporation

Lug on Straight Pipe - Limitations and Local Stresses

Limitations of Applicability

Review Yes/No
Check Lines

(1) The long side of the lug (2xL2) must be at least three times the length of the short side (2xL1).

Limit1 = 0 (1 = OK, 0 = Not Acceptable) OK, smaller profile 12/18/00

(2) Attachment and pipe material moduli of elasticity and coefficients for thermal expansion must be essentially the same. Yes ✓ No___

(3) Geometric Parameter Limitations

(a) Beta1 < 0.5 $\beta 1 = 0.183$

Limit3a = 1 (1 = OK, 0 = Not Acceptable)

(b) Beta2 < 0.5 $\beta 2 = 0.257$

Limit3b = 1 (1 = OK, 0 = Not Acceptable)

(c) Beta1 x Beta2 < 0.075 $\beta 1 \cdot \beta 2 = 0.047$

Limit3c = 1 (1 = OK, 0 = Not Acceptable)

(4) No other attachment shall occur within the following distance Yes ✓ No___

Limit4 = 1.598 in

(5) Pipe diameter to thickness ratio (Do/tp < 100) $\frac{Do}{tp} = 37.333$

Limit5 = 1 (1 = OK, 0 = Not Acceptable)

ARE ALL LIMITATIONS ACCEPTABLE? Yes ✓ No___

Note: If any of the above limitations are unacceptable refer to the User Manual, Section 4.0 for assistance.

Local Pipe Wall Stresses

$Sml_{sl} = 5545$ psi $Sml_u = 0$ psi $Sml_f = 14026$ psi

$Spl = 3934$ psi $Snl = 1093$ psi $Snl'' = 19456$ psi

Reference

AltraLug Version 1.1 Copyright (c) 1995 Altran Corporation

Lug on Straight Pipe - Code Evaluation

Design ($S_{sl} + S_{ml} < Sh$)

$S_{sl} + Sml_{sl} = 7744 \cdot psi$ $Sh = 15000 \cdot psi$

$Eq8 = 1$ (1 = OK, 0 = Not Acceptable)

Upset ($S_u + S_{ml} < 1.2\ Sh$)

$S_u + Sml_u = 0 \cdot psi$ $1.2 \cdot Sh = 18000 \cdot psi$

$Eq9_u = 1$ (1 = OK, 0 = Not Acceptable)

Faulted ($S_f + S_{ml} < 1.8\ Sh$)

$S_f + Sml_f = 18645 \cdot psi$ $\cancel{1.8}\ 2.4 \cdot Sh = \cancel{27000}\ 36000 \cdot psi$ 12/18/00

$Eq9_f = 1$ (1 = OK, 0 = Not Acceptable)

Thermal ($S_e + S_{pl}/2 < Sa$)

$S_e + \frac{Spl}{2} = 6785 \cdot psi$ $Sa = 22500 \cdot psi$

$Eq10 = 1$ (1 = OK, 0 = Not Acceptable)

Design plus Thermal ($S_{sl} + S_e + S_{ml} + S_{pl}/2 < (Sa + Sh)$)

$S_{sl} + S_e + Sml_{sl} + \frac{Spl}{2} = 14529 \cdot psi$ $Sa + Sh = 37500 \cdot psi$

$Eq11 = 1$ (1 = OK, 0 = Not Acceptable)

AltraLug Version 1.1 Copyright (c) 1995 Altran Corporation

Lug on Straight Pipe - Lug Evaluation

Additional Equation (Snl" < 2.0 Sy)

$Snl'' = 19456 \cdot psi$ $\qquad$ $2.0 \cdot Sy = 70000 \cdot psi$

$Ad1 = 1$ (1 = OK, 0 = Not Acceptable)

Additional Equation (Q1"/2L1La + Q2"/2L2Lb + Mt"' < Sy)

$$\frac{Q1''}{2 \cdot L1 \cdot La} + \frac{Q2''}{2 \cdot L2 \cdot Lb} + Mt''' = 5670 \cdot psi \qquad Sy = 35000 \cdot psi$$

$Ad2 = 1$ (1 = OK, 0 = Not Acceptable)

The following additional equations require satisfaction for weld stresses

$$\frac{W''}{Aw_{WC}} + \frac{Ml''}{Zwl_{WC}} + \frac{Mn''}{Zwn_{WC}} + \frac{2 \cdot (Q1'' + Q2'')}{Aw_{WC}} + \frac{Mt''}{Zwt_{WC}} = 16143 \cdot psi$$

$2 \cdot Sy = 70000 \cdot psi$

$Ad3 = 1$ (1 = OK, 0 = Not Acceptable)

$$\left[\left(\frac{W''}{Aw_{WC}}\right)^2 + 4 \cdot \left(\frac{Q1'' + Q2''}{Aw_{WC}} + \frac{Mt''}{Zwt_{WC}}\right)^2\right]^{0.5} = 8864 \cdot psi \qquad Sy = 35000 \cdot psi$$

$Ad4 = 1$ (1 = OK, 0 = Not Acceptable)

Reference

AltraLug Version 1.1 Copyright (c) 1995 Altran Corporation

Trunnion on Straight Pipe - Trunnion Evaluation

SUMMARY

1)- Limitations of applicability

Are all limitations acceptable ? Yes ✓ No____

2)- Code evaluation $j := 0..8$

$Calc_Stress_j :=$	$Allow_Stress_j :=$	$Equ_j :=$
$S_{sl} + Sml_{sl}$	Sh	Eq8
$S_u + Sml_u$	1.2·Sh	$Eq9_u$
$S_f + Sml_f$	1.8·Sh	$Eq9_f$
$S_e + \frac{Spl}{2}$	Sa	Eq10
$S_{sl} + S_e + Sml_{sl} + \frac{Spl}{2}$	Sa + Sh	Eq11
Snl''	2·Sy	Ad1
$\frac{Q1''}{2 \cdot L1 \cdot La} + \frac{Q2''}{2 \cdot L2 \cdot Lb} + Mt'''$	Sy	Ad2
$\frac{W''}{Aw_{WC}} + \frac{Ml''}{Zwl_{WC}} + \frac{Mn''}{Zwn_{WC}} + \frac{2 \cdot (Q1'' + Q2')}{Aw_{WC}} + \frac{Mt''}{Zwt_{WC}}$	2·Sy	Ad3
$\left[\left(\frac{W''}{Aw_{WC}}\right)^2 + 4 \cdot \left(\frac{Q1'' + Q2''}{Aw_{WC}} + \frac{Mt''}{Zwt_{WC}}\right)^2\right]^{0.5}$	Sy	Ad4

Code Equations	Calculated Stress	Allowable Stress	Acceptance
$Equ_j :=$ Eq8	7744	15000	1
$Eq9_u$	0	18000	1
$Eq9_f$	18645	27000	1
Eq10	6785	22500	1
Eq11	14529	37500	1
Ad1	19456	70000	1
Ad2	5670	35000	1
Ad3	16143	70000	1
Ad4	8864	35000	1

$Calc_Stress = \begin{bmatrix} 7744 \\ 0 \\ 18645 \\ 6785 \\ 14529 \\ 19456 \\ 5670 \\ 16143 \\ 8864 \end{bmatrix} \cdot psi$ $Allow_Stress = \begin{bmatrix} 15000 \\ 18000 \\ 27000 \\ 22500 \\ 37500 \\ 70000 \\ 35000 \\ 70000 \\ 35000 \end{bmatrix} \cdot psi$ $Equ = \begin{bmatrix} 1 \\ 1 \\ 1 \\ 1 \\ 1 \\ 1 \\ 1 \\ 1 \\ 1 \end{bmatrix}$

WOLF CREEK NUCLEAR OPERATING CORPORATION		CALCULATION / ANALYSIS SHEET
STATION / UNIT Wolf Creek Nuclear Plant	CALCULATION NO. 96227-TR-03, Rev. 1 ATTACHMENT H	PAGE H-23 OF ~~H~~
PREPARER / DATE: 12/18/00	REVIEWER / DATE: J. Bu 12/18/00	
SUBJECT OF COMPUTATION: Trunn A Hanger CON		MOD. NO / PROJ. NO.
		COMPONENT DESCRIPTION:

Reference

AltraLug Version 1.1 Copyright (c) 1995 Altran Corporation

Trunnion on Straight Pipe - Trunnion Evaluation

3)- Filename and file lock date

Match the filename and the lock date in the authentication index ? Yes___No___

THIS COMPUTERIZED CALCULATION HAS BEEN CONFIRMED BY:

☒ DETAILED CHECKING OF ALL FORMULATION

☐ COMPARISON TO AN IDENTICAL VERIFIED FILE IN:

_____ BY: J. Brem DATE: 12/18/00

_APL.MCD

ITEM NO.	NO REQD.	PART NO.	DESCRIPTION	MATERIAL
1	4		1½" × 2½" × 3½" LUG (BY M-216 SUPPLIER)	SA515 GR65
2	1		6" SCHEDULE 40 PIPE STANCHION 7 1/16" LG.	SA106 GR B
3	1		⅝" × 7" × 7" PLATE	SA515 GR65

Return A

Altran Report
96227-TR-03 Rev. 01
Att./Appx. A Sh H24

1 12/12/00

FORCES*	FX	FY	LATERAL
POSITIVE	10408	2000	10222
NEGATIVE	4050	11500	4200

2

MVMTS *	X	Y	Z
THERMAL	—	—	—
SEISMIC	—	—	—

PROBLEM NO. P-093A

STRESS NO. —

ISSUE 6 DATA PT. 110

NUCLEAR CLASS 3

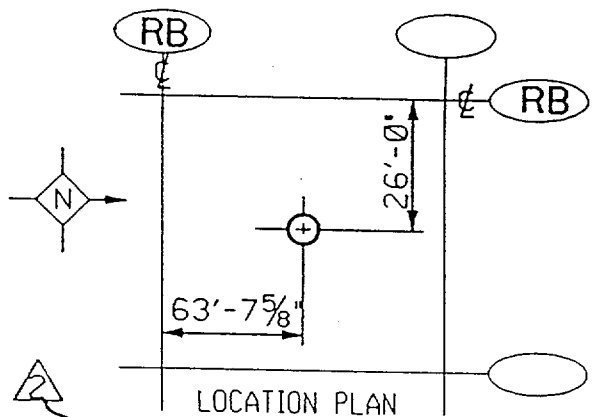

2

LOCATION PLAN
AREA 2

NOTES: 1. ALL WELDS FOR NUCLEAR SUPPORTS TO BE VISUALLY INSPECTED UNLESS NOTED OTHERWISE
2. THIS DWG. REPLACES 0-GN01-C017/242(Q) REV.1
3. FOR DOCUMENT CLARITY REV.0 TO 1 OMITTED.
4. USE ITEMS 1 THRU 3 FROM 0-GN01-C017/242(Q) R/1

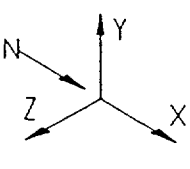

1540

LOAD

REV ORG	REV	RLSD	DESCRIPTION	DWN	CHK	ENG	APPVL DATE
	2	DC2 8/26/94	REV. TO INC. PMPCN M-798-W-M-16GN01(Q)-28-01 PER PMR 03478 CLOSE OUT AND AS NOTED. CAD DWG.	KAM	SP	SP	EPC 7/26/94

WOLF CREEK
NUCLEAR OPERATING CORPORATION

DRAWING NO.
M-16GN01

PIPE SUPPORTS
CONTAINMENT COOLING SYS.
REACTOR BLDG. TRAIN "A"

REF. DWGS. ISO M-13GN01
PIPE
STEEL C-0L2902

HANGER NO. 1-GN01-C017/242(Q)

REV. 2

PAGE 1 OF 3

LEVEL 1 45 1 3 3 3 6 0

DFN-ATS/ gn01c017 1.dgn
REF DFN-ATS/

8 1/2X11 A SIZE
PSC-

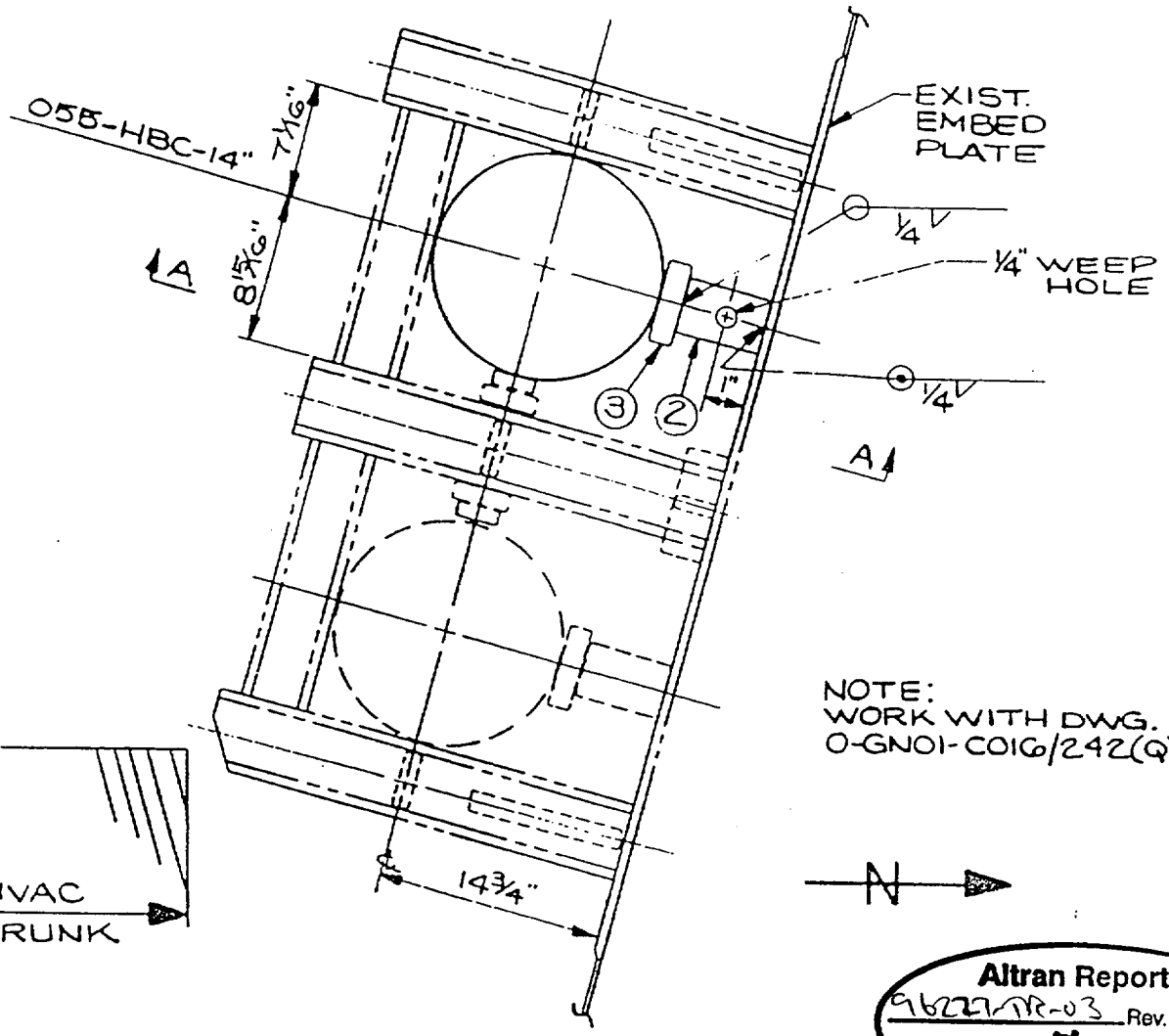

NOTE:
WORK WITH DWG.
0-GN01-C016/242(Q)

PLAN VIEW AT EL. 2028'-11 1/16"

Altran Report
96227-TR-03 Rev. 0 1
Att/Appx. A Sh 1 2 5
Return A
12/2/00

WOLF CREEK NUCLEAR OPERATING CORPORATION		REF. DWGS. ISO M-13GN01 PIPE STEEL C-0L2902	
DRAWING NO. M-16GN01		HANGER NO.	REV.
PIPE SUPPORTS CONTAINMENT COOLING SYS. REACTOR BLDG. TRAIN "A"		1-GN01-C017/242(Q) PAGE 2 OF 3	2

LEVEL 1 45 3 3 6 0

DFN-ATS/gaQ1cQ1Z 2.dgn
REF DFN-ATS/gaQ1cQ1Z 2.cit

8 1/2X11 A SIZE

PSC-

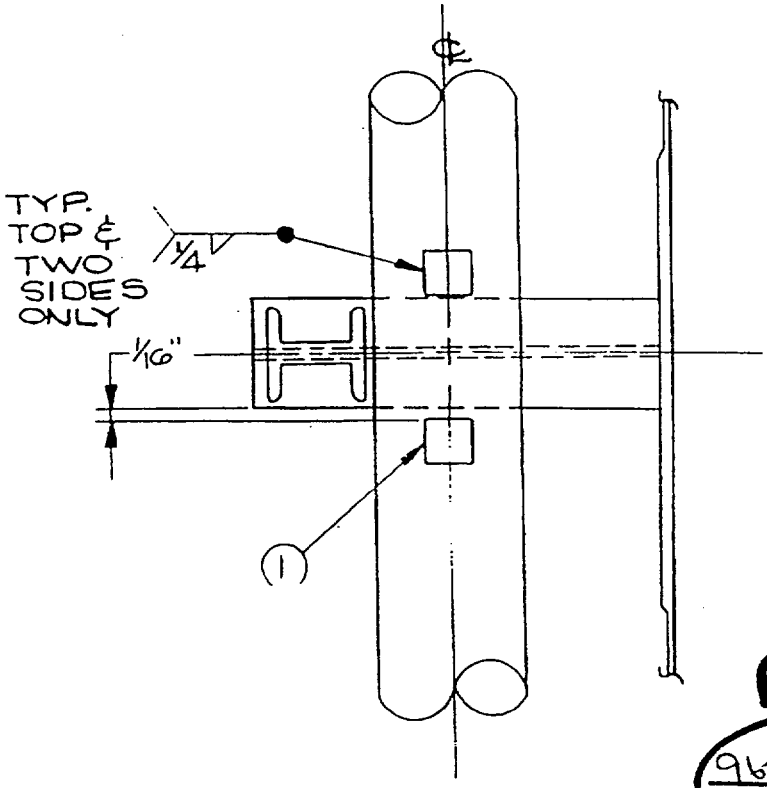

SECTION A-A

Return A

Altran Report
96227-TR-03 Rev. 1
Att./Appx. A Sh. H26

12/12/00

WOLF CREEK NUCLEAR OPERATING CORPORATION		REF. DWGS.	ISO M-13GN01 PIPE STEEL C-0L2902
DRAWING NO. M-16GN01		HANGER NO.	REV.
PIPE SUPPORTS CONTAINMENT COOLING SYS. REACTOR BLDG. TRAIN "A"		1-GN01-C017/242(Q) PAGE 3 OF 3	2

WOLF CREEK NUCLEAR OPERATING CORPORATION		CALCULATION / ANALYSIS SHEET
STATION / UNIT Wolf Creek Nuclear Plant	CALCULATION NO. 96227-TR-03, Rev. 1 ATTACHMENT H	PAGE H- 27 OF ~~H-~~
PREPARER / DATE: 12/8/00	REVIEWER / DATE: 12/18/00	
SUBJECT OF COMPUTATION: Train B Hanger C021		MOD. NO / PROJ. NO.
		COMPONENT DESCRIPTION:

Reference

AltraLug Version 1.1 Copyright (c) 1995 Altran Corporation Filename C021_TRB.MCD

Lug on Straight Pipe - Input Parameters

This program was verified in accordance with the Altran Quality Assurance Manual, this document develops local stresses in straight pipe due to a rectangular welded attachment in accordance with Altran document 92117-C-01, Rev. 2 .

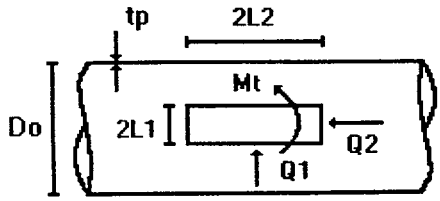

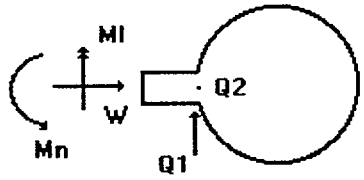

Input Values (Key Down)

Pipe Properties:

Diameter $Do := 10.75 \cdot in$

Thickness $tp := 0.365 \cdot in$

Lug Properties:

$L1 := 1.25 \cdot in$

$L2 := 1.875 \cdot in$

Weld Type (WT):

1 = Fillet Weld
2 = Full or Partial Penetration Weld

$WT := 1$

Weld Size (tw):

$tw := 0.25 \cdot in$

Weld Configuration (WC):

2 = Welded on Two Sides,
3 = Welded on Three Sides
4 = Welded on Four Sides

$WC := 3$

Note: Enter WC:=4 for Full Penetration Weld

Lug Loads (at the lug/pipe interface):

Design	Upset	Faulted	Thermal
$W_{sl} := 0 \cdot lbf$	$W_u := 0 \cdot lbf$	$W_f := 0 \cdot lbf$	$W_e := 0 \cdot lbf$
$Q1_{sl} := 0 \cdot lbf$	$Q1_u := 0 \cdot lbf$	$Q1_f := 0 \cdot lbf$	$Q1_e := 0 \cdot lbf$
$Q2_{sl} := 3863 \cdot lbf$	$Q2_u := 0 \cdot lbf$	$Q2_f := 6107 \cdot lbf$	$Q2_e := 4317 \cdot lbf$
$Mt_{sl} := 0 \cdot lbf \cdot in$	$Mt_u := 0 \cdot lbf \cdot in$	$Mt_f := 0 \cdot lbf \cdot in$	$Mt_e := 0 \cdot lbf \cdot in$
$Ml_{sl} := 1932 \cdot lbf \cdot in$ *	$Ml_u := 0 \cdot lbf \cdot in$	$Ml_f := 3054 \cdot lbf \cdot in$ *	$Ml_e := 2159 \cdot lbf \cdot in$ *
$Mn_{sl} := 0 \cdot lbf \cdot in$	$Mn_u := 0 \cdot lbf \cdot in$	$Mn_f := 0 \cdot lbf \cdot in$	$Mn_e := 0 \cdot lbf \cdot in$

* Conservative, used offset of "h", actual is 1/4". 12/8/00

Piping Stress Analysis Information: $S_{sl} := 1609 \cdot psi$ $S_u := 0 \cdot psi$ $S_f := 2542 \cdot psi$ $S_e := 2528 \cdot psi$

Material Allowables:

	Pipe Material	Lug Material
Hot Allowable	$SH_0 := 15000 \cdot psi$	$SH_1 := 16200 \cdot psi$
Cold Allowable	$SC_0 := 15000 \cdot psi$	$SC_1 := 16200 \cdot psi$
Yield Strength	$SY_0 := 35000 \cdot psi$	$SY_1 := 35000 \cdot psi$

End of Input

WOLF CREEK NUCLEAR OPERATING CORPORATION		CALCULATION / ANALYSIS SHEET
STATION / UNIT Wolf Creek Nuclear Plant	CALCULATION NO. 96227-TR-03, Rev. 1 ATTACHMENT H	PAGE H-28 OF ~~H~~
PREPARER / DATE: 12/18/00	REVIEWER / DATE: J. B 12/18/00	
SUBJECT OF COMPUTATION: Travis B Hanger C021		MOD. NO / PROJ. NO.
		COMPONENT DESCRIPTION:

Reference

AltraLug Version 1.1 Copyright (c) 1995 Altran Corporation

Lug on Straight Pipe - Calculated Parameters

Geometric Parameters:

$\gamma = 14.226$ $\beta 1 = 0.241$ $\beta 2 = 0.361$

$La = 0.365 \cdot in$ $Lb = 0.365 \cdot in$ $Lc = 1.25 \cdot in$ $Ld = 1.875 \cdot in$

$Al = 9.375 \cdot in^2$ $Zll = 5.859 \cdot in^3$ $Zln = 3.906 \cdot in^3$

Thrust Parameters:

$Ao_t = 2.2$ $\theta_t = 40 \cdot deg$ $Xo_t = 0$ $Yo_t = 0.05$

$X1_t = -0.618$ $Y1_t = -0.392$ $\eta_t = 0.722$

Longitudinal Parameters:

$Ao_l = 2$ $\theta_l = 50 \cdot deg$ $Xo_l = -0.45$ $Yo_l = -0.55$

$X1_l = -1.068$ $Y1_l = -0.992$ $\eta_l = 1.431$

Circumferential Parameters:

$Ao_n = 1.8$ $\theta_n = 40 \cdot deg$ $Xo_n = -0.75$ $Yo_n = -0.6$

$X1_n = -1.368$ $Y1_n = -1.042$ $\eta_n = 1.715$

Stress Indices:

$B_t = 20.85$ $B_l = 5.914$ $B_n = 10.292$

$C_t = 31.274$ $C_l = 8.872$ $C_n = 15.438$

Weld Parameters

$Aw_{WC} = 1.767 \cdot in^2$ $Zwn_{WC} = 1.841 \cdot in^3$ $J_{WC} = 5.02 \cdot in^4$

$Zwl_{WC} = 1.16 \cdot in^3$ $Zwt_{WC} = 2.668 \cdot in^3$ $Cw_{WC} = 1.881 \cdot in$

AltraLug Version 1.1 Copyright (c) 1995 Altran Corporation

Lug on Straight Pipe - Limitations and Local Stresses

Limitations of Applicability

Review Yes/No
Check Lines

(1) The long side of the lug (2xL2) must be at least three times the length of the short side (2xL1).

Limit1 = 0 (1 = OK, 0 = Not Acceptable) OK, smaller profile on pipe surface DSS 12/18/00

(2) Attachment and pipe material moduli of elasticity and coefficients for thermal expansion must be essentially the same. Yes ✓ No___

(3) Geometric Parameter Limitations

(a) Beta1 < 0.5 $\beta 1 = 0.241$

Limit3a = 1 (1 = OK, 0 = Not Acceptable)

(b) Beta2 < 0.5 $\beta 2 = 0.361$

Limit3b = 1 (1 = OK, 0 = Not Acceptable)

(c) Beta1 x Beta2 < 0.075 $\beta 1 \cdot \beta 2 = 0.087$ OK, slightly over DSS 12/18/00

Limit3c = 0 (1 = OK, 0 = Not Acceptable)

(4) No other attachment shall occur within the following distance Yes ✓ No___

Limit4 = 1.377 in

(5) Pipe diameter to thickness ratio (Do/tp < 100) $\frac{Do}{tp} = 29.452$

Limit5 = 1 (1 = OK, 0 = Not Acceptable)

ARE ALL LIMITATIONS ACCEPTABLE? Yes ✓ No___

Note: If any of the above limitations are unacceptable refer to the User Manual, Section 4.0 for assistance.

Local Pipe Wall Stresses

$Sml_{sl} = 4772$ psi $Sml_u = 0$ psi $Sml_f = 7544$ psi

$Spl = 23122$ psi $Snl = 6423$ psi $Snl'' = 15509$ psi

AltraLug Version 1.1 Copyright (c) 1995 Altran Corporation

Lug on Straight Pipe - Code Evaluation

Design ($S_{sl} + S_{ml} < Sh$)

$S_{sl} + Sml_{sl} = 6381 \cdot psi$ $\qquad$ $Sh = 15000 \cdot psi$

$Eq8 = 1$ (1 = OK, 0 = Not Acceptable)

Upset ($S_u + S_{ml} < 1.2\ Sh$)

$S_u + Sml_u = 0 \cdot psi$ $\qquad$ $1.2 \cdot Sh = 18000 \cdot psi$

$Eq9_u = 1$ (1 = OK, 0 = Not Acceptable)

Faulted ($S_f + S_{ml} < 1.8\ Sh$)

$S_f + Sml_f = 10086 \cdot psi$ $\qquad$ $\cancel{1.8}\ 2.4 \cdot Sh = \cancel{27000}\ 36{,}000 \cdot psi$ TSB 12/18/00

$Eq9_f = 1$ (1 = OK, 0 = Not Acceptable)

Thermal ($S_e + S_{pl}/2 < Sa$)

$S_e + \frac{Spl}{2} = 14089 \cdot psi$ $\qquad$ $Sa = 22500 \cdot psi$

$Eq10 = 1$ (1 = OK, 0 = Not Acceptable)

Design plus Thermal ($S_{sl} + S_e + S_{ml} + S_{pl}/2 < (Sa + Sh)$)

$S_{sl} + S_e + Sml_{sl} + \frac{Spl}{2} = 20471 \cdot psi$ $\qquad$ $Sa + Sh = 37500 \cdot psi$

$Eq11 = 1$ (1 = OK, 0 = Not Acceptable)

AltraLug Version 1.1 Copyright (c) 1995 Altran Corporation

Lug on Straight Pipe - Lug Evaluation

Additional Equation (Snl" < 2.0 Sy)

$Snl'' = 15509 \cdot psi$ $\qquad$ $2.0 \cdot Sy = 70000 \cdot psi$

$Ad1 = 1$ (1 = OK, 0 = Not Acceptable)

Additional Equation (Q1"/2L1La + Q2"/2L2Lb + Mt"' < Sy)

$$\frac{Q1''}{2 \cdot L1 \cdot La} + \frac{Q2''}{2 \cdot L2 \cdot Lb} + Mt''' = 7616 \cdot psi \qquad Sy = 35000 \cdot psi$$

$Ad2 = 1$ (1 = OK, 0 = Not Acceptable)

The following additional equations require satisfaction for weld stresses

$$\frac{W''}{Aw_{WC}} + \frac{Ml''}{Zwl_{WC}} + \frac{Mn''}{Zwn_{WC}} + \frac{2 \cdot (Q1'' + Q2'')}{Aw_{WC}} + \frac{Mt''}{Zwt_{WC}} = 16289 \cdot psi$$

$2 \cdot Sy = 70000 \cdot psi$

$Ad3 = 1$ (1 = OK, 0 = Not Acceptable)

$$\left[\left(\frac{W''}{Aw_{WC}}\right)^2 + 4 \cdot \left(\frac{Q1'' + Q2''}{Aw_{WC}} + \frac{Mt''}{Zwt_{WC}}\right)^2\right]^{0.5} = 11795 \cdot psi \qquad Sy = 35000 \cdot psi$$

$Ad4 = 1$ (1 = OK, 0 = Not Acceptable)

AltraLug Version 1.1 Copyright (c) 1995 Altran Corporation

Trunnion on Straight Pipe - Trunnion Evaluation

SUMMARY

1)- Limitations of applicability

Are all limitations acceptable ? Yes ✓ No____

2)- Code evaluation $j := 0..8$

$Calc_Stress_j :=$	$Allow_Stress_j :=$	$Equ_j :=$
$S_{sl} + Sml_{sl}$	Sh	Eq8
$S_u + Sml_u$	1.2·Sh	$Eq9_u$
$S_f + Sml_f$	1.8·Sh	$Eq9_f$
$S_e + \frac{Spl}{2}$	Sa	Eq10
$S_{sl} + S_e + Sml_{sl} + \frac{Spl}{2}$	Sa + Sh	Eq11
Snl''	2·Sy	Ad1
$\frac{Q1''}{2 \cdot L1 \cdot La} + \frac{Q2''}{2 \cdot L2 \cdot Lb} + Mt'''$	Sy	Ad2
$\frac{W''}{Aw_{WC}} + \frac{Ml''}{Zwl_{WC}} + \frac{Mn''}{Zwn_{WC}} + \frac{2 \cdot (Q1'' + Q2'')}{Aw_{WC}} + \frac{Mt''}{Zwt_{WC}}$	2·Sy	Ad3
$\left[\left(\frac{W''}{Aw_{WC}}\right)^2 + 4 \cdot \left(\frac{Q1'' + Q2''}{Aw_{WC}} + \frac{Mt''}{Zwt_{WC}}\right)^2\right]^{0.5}$	Sy	Ad4

Code Equations	Calculated Stress	Allowable Stress	Acceptance
$Equ_j :=$			
Eq8	6381	15000	1
$Eq9_u$	0	18000	1
$Eq9_f$	10086	27000	1
Eq10	14089	22500	1
Eq11	20471	37500	1
Ad1	15509	70000	1
Ad2	7616	35000	1
Ad3	16289	70000	1
Ad4	11795	35000	1

$Calc_Stress = \begin{bmatrix} 6381 \\ 0 \\ 10086 \\ 14089 \\ 20471 \\ 15509 \\ 7616 \\ 16289 \\ 11795 \end{bmatrix} \cdot psi$ $Allow_Stress = \begin{bmatrix} 15000 \\ 18000 \\ 27000 \\ 22500 \\ 37500 \\ 70000 \\ 35000 \\ 70000 \\ 35000 \end{bmatrix} \cdot psi$ $Equ = \begin{bmatrix} 1 \\ 1 \\ 1 \\ 1 \\ 1 \\ 1 \\ 1 \\ 1 \\ 1 \end{bmatrix}$

Reference

AltraLug Version 1.1 Copyright (c) 1995 Altran Corporation

Trunnion on Straight Pipe - Trunnion Evaluation

3)- Filename and file lock date

Match the filename and the lock date in the authentication index ? Yes ✓ No___

THIS COMPUTERIZED CALCULATION HAS BEEN CONFIRMED BY:

[X] DETAILED CHECKING OF ALL FORMULATION

[ ] COMPARISON TO AN IDENTICAL VERIFIED FILE IN:

_____ BY: J. BREW DATE: 12/18/00

_APL.MCD

ITEM NO	NO REQ'D	PART NO.	SIZE	DESCRIPTION	MATERIAL
	1		5"ø PIPE STANCHION, SCH 40, 5'-5 5/16" LG.	(BY M-216 SUPPLIER)	SA 106. GR·B
–	1		5/8"x7"x7" PL	(BY M-216 SUPPLIER)	SA-515, GR 65
3	4		1 1/4"x2 1/2"x3 3/4" LUG		SA 515, GR 65
4	1		1/16"x8"x8" SHIM PL		

Return B

Altran Report
96227-TR-03 Rev. 01
Att./Appx. H Sh H34

1 12/12/98

7247 3

9072 2949

FORCES #	FX	FY	FZ
POS.	4367	8200	2843
NEG.	3350	9950	2250

MVMTS. "	X	Y	Z
THERMAL	–	–	–
SEISMIC	–	–	–

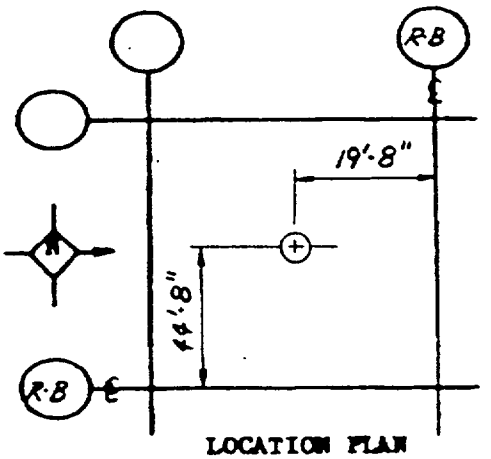

LOCATION PLAN AREA

PROBLEM NO. P-201 3 STRESS NO. –

ISSUE 5

DATA PT. 347 NUCLEAR CLASS 3

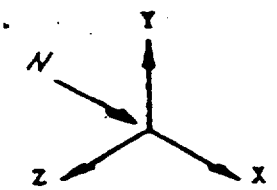

NOTE: 1. All welds for nuclear supports to be visually inspected unless noted otherwise
2. THIS DWG. REPLACES O-GN02-C021/241 (Q), REV. 1.
3. FOR DOCUMENT CLARITY REV. 0 & 1 OMITTED.
4. USE ITEMS 1, 2, & 3 FROM O-GN02-C021/241 (Q), REV. 1.

REV ORG	REV	RLSD	DESCRIPTION	DWN	CHK	ENG	APPVL DATE
	3	DC2 8/26/94	REV. TO INC. PMPCN M-798-W-M-16GN02(Q)-24-01 PER PMR 03478 CLOSE OUT & AS NOTED. CAD DWG.	KAM	BS	BS	CLU 7/26/94

WOLF CREEK
NUCLEAR OPERATING CORPORATION

REF. DWGS. ISO M-13GN02
PIPE
STEEL C-1C2511

DRAWING NO.
M-16GN02

HANGER NO.

REV.

PIPE SUPPORTS
AINMENT COOLING SYSTEM
.CTOR BUILDING TRAIN"B"

1-GN02-C021/241(Q)
PAGE 1 OF 2

3

Return B

Altran Report
96227-TR-03 Rev. #1
Att./Appx. A Sh. H35

NOTE: WORK WITH DWG.
0-GN02-C024 / 241

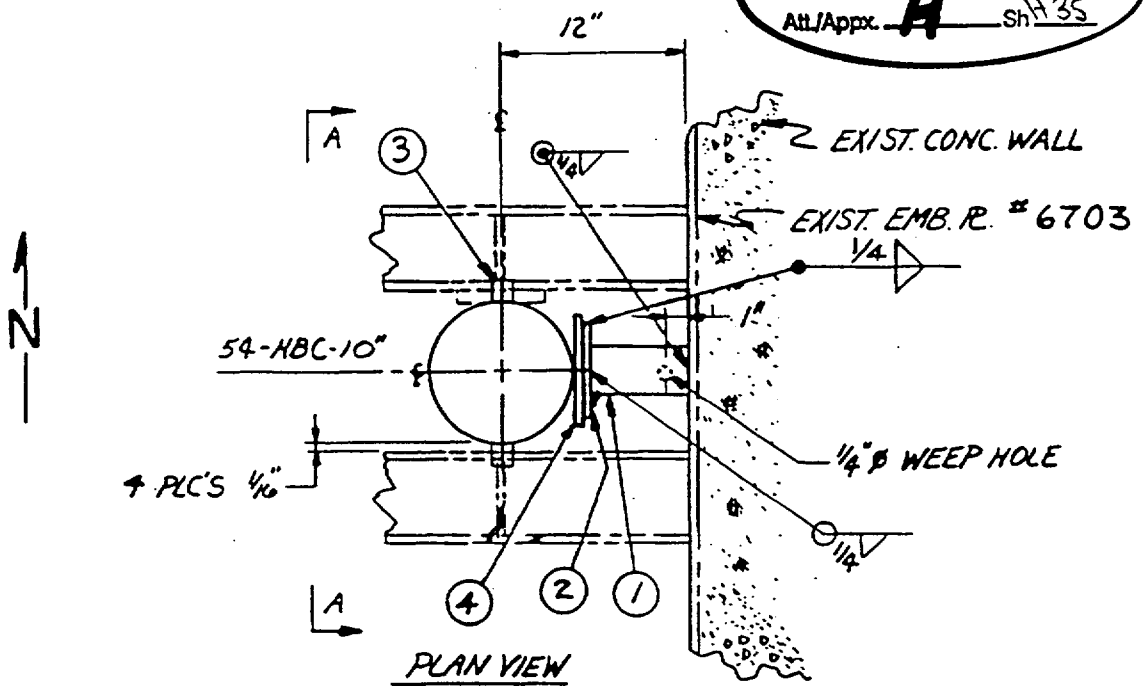

PLAN VIEW
AT ℄ EL 2042'-6"

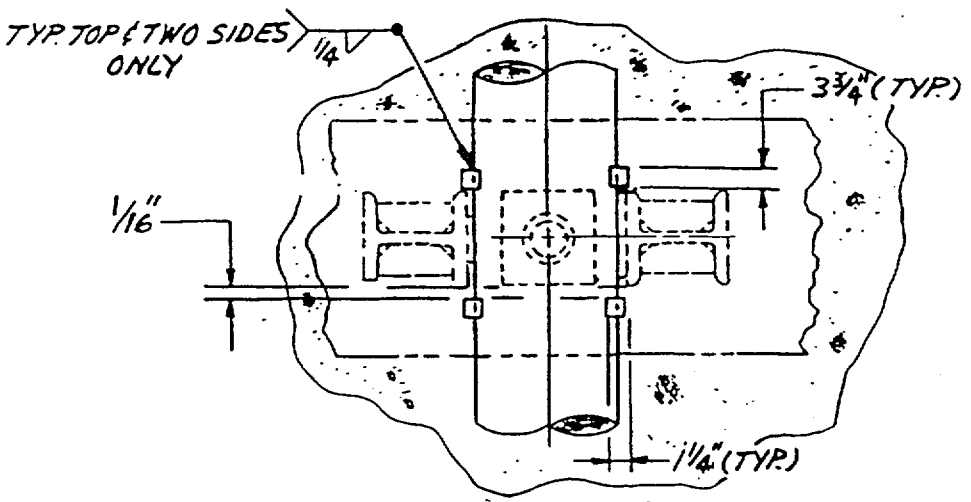

SECT. A-A

WOLF CREEK NUCLEAR OPERATING CORPORATION		REF. DWGS. ISO M-13GN02, PIPE, STEEL C-1C2511	
DRAWING NO. M-16GN02		HANGER NO.	REV.
PIPE SUPPORTS CONTAINMENT COOLING SYSTEM REACTOR BUILDING TRAIN "B"		1-GN02-C021/241(Q) PAGE 2 OF 2	3

Reference

AltraLug Version 1.1

Copyright (c) 1995 Altran Corporation

Filename
R013_TRB.MCD

Lug on Straight Pipe - Input Parameters

This program was verified in accordance with the Altran Quality Assurance Manual, this document develops local stresses in straight pipe due to a rectangular welded attachment in accordance with Altran document 92117-C-01, Rev. 2 .

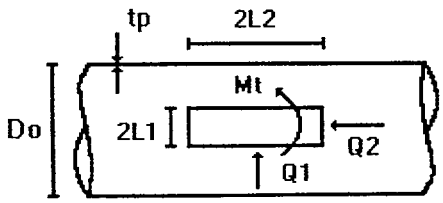

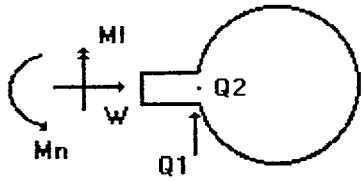

Input Values (Key Down)

Pipe Properties:

Diameter $Do := 6.625 \cdot in$

Thickness $tp := 0.280 \cdot in$

Lug Properties:

$L1 := 0.625 \cdot in$

$L2 := 0.625 \cdot in$

Weld Type (WT):

1 = Fillet Weld
2 = Full or Partial Penetration Weld

$WT := 1$

Weld Size (tw):

$tw := 0.25 \cdot in$

Weld Configuration (WC):

2 = Welded on Two Sides,
3 = Welded on Three Sides
4 = Welded on Four Sides

$WC := 3$

Note: Enter WC:=4 for Full Penetration Weld

Lug Loads (at the lug/pipe interface):

Design	Upset	Faulted	Thermal
$W_{sl} := 0 \cdot lbf$	$W_u := 0 \cdot lbf$	$W_f := 0 \cdot lbf$	$W_e := 0 \cdot lbf$
$Q1_{sl} := 0 \cdot lbf$	$Q1_u := 0 \cdot lbf$	$Q1_f := 0 \cdot lbf$	$Q1_e := 0 \cdot lbf$
$Q2_{sl} := 0 \cdot lbf$	$Q2_u := 0 \cdot lbf$	$Q2_f := 676 \cdot lbf$	$Q2_e := 0 \cdot lbf$
$Mt_{sl} := 0 \cdot lbf \cdot in$	$Mt_u := 0 \cdot lbf \cdot in$	$Mt_f := 0 \cdot lbf \cdot in$	$Mt_e := 0 \cdot lbf \cdot in$
$Ml_{sl} := 0 \cdot lbf \cdot in$	$Ml_u := 0 \cdot lbf \cdot in$	$Ml_f := 338 \cdot lbf \cdot in$	$Ml_e := 0 \cdot lbf \cdot in$
$Mn_{sl} := 0 \cdot lbf \cdot in$	$Mn_u := 0 \cdot lbf \cdot in$	$Mn_f := 0 \cdot lbf \cdot in$	$Mn_e := 0 \cdot lbf \cdot in$

Piping Stress Analysis Information: $S_{sl} := 1808 \cdot psi$ $S_u := 0 \cdot psi$ $S_f := 2065 \cdot psi$ $S_e := 1535 \cdot psi$

Material Allowables:

	Pipe Material	Lug Material
Hot Allowable	$SH_0 := 15000 \cdot psi$	$SH_1 := 16200 \cdot psi$
Cold Allowable	$SC_0 := 15000 \cdot psi$	$SC_1 := 16200 \cdot psi$
Yield Strength	$SY_0 := 35000 \cdot psi$	$SY_1 := 35000 \cdot psi$

End of Input

Reference

AltraLug Version 1.1 Copyright (c) 1995 Altran Corporation

Lug on Straight Pipe - Calculated Parameters

Geometric Parameters:

$\gamma = 11.33$ $\beta 1 = 0.197$ $\beta 2 = 0.197$

$La = 0.28 \cdot in$ $Lb = 0.28 \cdot in$ $Lc = 0.625 \cdot in$ $Ld = 0.625 \cdot in$

$Al = 1.563 \cdot in^2$ $Zll = 0.326 \cdot in^3$ $Zln = 0.326 \cdot in^3$

Thrust Parameters:

$Ao_t = 2.2$ $\theta_t = 40 \cdot deg$ $Xo_t = 0$ $Yo_t = 0.05$

$X1_t = -0.706$ $Y1_t = -0.656$ $\eta_t = 0.961$

Longitudinal Parameters:

$Ao_l = 2$ $\theta_l = 50 \cdot deg$ $Xo_l = -0.45$ $Yo_l = -0.55$

$X1_l = -1.156$ $Y1_l = -1.256$ $\eta_l = 1.701$

Circumferential Parameters:

$Ao_n = 1.8$ $\theta_n = 40 \cdot deg$ $Xo_n = -0.75$ $Yo_n = -0.6$

$X1_n = -1.456$ $Y1_n = -1.306$ $\eta_n = 1.952$

Stress Indices:

$B_t = 9.957$ $B_l = 2.205$ $B_n = 3.791$

$C_t = 14.936$ $C_l = 3.308$ $C_n = 5.686$

Weld Parameters

$Aw_{WC} = 0.663 \cdot in^2$ $Zwn_{WC} = 0.322 \cdot in^3$ $J_{WC} = 0.316 \cdot in^4$

$Zwl_{WC} = 0.138 \cdot in^3$ $Zwt_{WC} = 0.421 \cdot in^3$ $Cw_{WC} = 0.751 \cdot in$

WOLF CREEK NUCLEAR OPERATING CORPORATION		CALCULATION / ANALYSIS SHEET
STATION / UNIT Wolf Creek Nuclear Plant	CALCULATION NO. 96227-TR-03, Rev. 1 ATTACHMENT H	PAGE H-38 OF
PREPARER / DATE: 12/12/00	REVIEWER / DATE: J. Bu 12/13/00	
SUBJECT OF COMPUTATION: Train B Hanger ROB	MOD. NO / PROJ. NO.	
	COMPONENT DESCRIPTION:	

Reference

AltraLug Version 1.1 Copyright (c) 1995 Altran Corporation

Lug on Straight Pipe - Limitations and Local Stresses

Limitations of Applicability

Review Yes/No
Check Lines

(1) The long side of the lug (2xL2) must be at least three times the length of the short side (2xL1).

Limit1 = 0 (1 = OK, 0 = Not Acceptable) smaller profile on pipe surface, OK

(2) Attachment and pipe material moduli of elasticity and coefficients for thermal expansion must be essentially the same. Yes ✓ No___

(3) Geometric Parameter Limitations

(a) Beta1 < 0.5 $\beta 1 = 0.197$

Limit3a = 1 (1 = OK, 0 = Not Acceptable)

(b) Beta2 < 0.5 $\beta 2 = 0.197$

Limit3b = 1 (1 = OK, 0 = Not Acceptable)

(c) Beta1 x Beta2 < 0.075 $\beta 1 \cdot \beta 2 = 0.039$

Limit3c = 1 (1 = OK, 0 = Not Acceptable)

(4) No other attachment shall occur within the following distance Yes ✓ No___

Limit4 = 0.942 in

(5) Pipe diameter to thickness ratio (Do/tp < 100) $\frac{Do}{tp} = 23.661$

Limit5 = 1 (1 = OK, 0 = Not Acceptable)

ARE ALL LIMITATIONS ACCEPTABLE? Yes ✓ No___

Note: If any of the above limitations are unacceptable refer to the User Manual, Section 4.0 for assistance.

Local Pipe Wall Stresses

$Sml_{sl} = 0$ psi $Sml_u = 0$ psi $Sml_f = 4221$ psi

$Spl = 0$ psi $Snl = 0$ psi $Snl'' = 5366$ psi

Reference

AltraLug Version 1.1 Copyright (c) 1995 Altran Corporation

Lug on Straight Pipe - Code Evaluation

Design ($S_{sl} + S_{ml} < Sh$)

$S_{sl} + Sml_{sl} = 1808 \cdot psi$ $\qquad$ $Sh = 15000 \cdot psi$

$Eq8 = 1$ (1 = OK, 0 = Not Acceptable)

Upset ($S_u + S_{ml} < 1.2\ Sh$)

$S_u + Sml_u = 0 \cdot psi$ $\qquad$ $1.2 \cdot Sh = 18000 \cdot psi$

$Eq9_u = 1$ (1 = OK, 0 = Not Acceptable)

Faulted ($S_f + S_{ml} < 1.8\ Sh$)

$S_f + Sml_f = 6286 \cdot psi$ $\qquad$ $\cancel{1.8}\ 2.4 \cdot Sh = \cancel{27000}\ 36000 \cdot psi$ 12/13/00

$Eq9_f = 1$ (1 = OK, 0 = Not Acceptable)

Thermal ($S_e + S_{pl}/2 < Sa$)

$S_e + \frac{Spl}{2} = 1535 \cdot psi$ $\qquad$ $Sa = 22500 \cdot psi$

$Eq10 = 1$ (1 = OK, 0 = Not Acceptable)

Design plus Thermal ($S_{sl} + S_e + S_{ml} + S_{pl}/2 < (Sa + Sh)$)

$S_{sl} + S_e + Sml_{sl} + \frac{Spl}{2} = 3343 \cdot psi$ $\qquad$ $Sa + Sh = 37500 \cdot psi$

$Eq11 = 1$ (1 = OK, 0 = Not Acceptable)

Reference

AltraLug Version 1.1 Copyright (c) 1995 Altran Corporation

Lug on Straight Pipe - Lug Evaluation

Additional Equation (Snl" < 2.0 Sy)

$Snl'' = 5366 \cdot psi$ $\qquad$ $2.0 \cdot Sy = 70000 \cdot psi$

$Ad1 = 1$ (1 = OK, 0 = Not Acceptable)

Additional Equation (Q1"/2L1La + Q2"/2L2Lb + Mt"' < Sy)

$$\frac{Q1''}{2 \cdot L1 \cdot La} + \frac{Q2''}{2 \cdot L2 \cdot Lb} + Mt''' = 1931 \cdot psi \qquad Sy = 35000 \cdot psi$$

$Ad2 = 1$ (1 = OK, 0 = Not Acceptable)

The following additional equations require satisfaction for weld stresses

$$\frac{W''}{Aw_{WC}} + \frac{Ml''}{Zwl_{WC}} + \frac{Mn''}{Zwn_{WC}} + \frac{2 \cdot (Q1'' + Q2'')}{Aw_{WC}} + \frac{Mt''}{Zwt_{WC}} = 4488 \cdot psi$$

$2 \cdot Sy = 70000 \cdot psi$

$Ad3 = 1$ (1 = OK, 0 = Not Acceptable)

$$\left[\frac{W''}{Aw_{WC}}^{2} + 4 \cdot \left(\frac{Q1'' + Q2''}{Aw_{WC}} + \frac{Mt''}{Zwt_{WC}} \right)^{2} \right]^{0.5} = 2040 \cdot psi \qquad Sy = 35000 \cdot psi$$

$Ad4 = 1$ (1 = OK, 0 = Not Acceptable)

Reference

AltraLug Version 1.1 Copyright (c) 1995 Altran Corporation

Trunnion on Straight Pipe - Trunnion Evaluation

SUMMARY

1)- Limitations of applicability

Are all limitations acceptable ? Yes ✓ No____

2)- Code evaluation $j := 0..8$

$Calc_Stress_j :=$	$Allow_Stress_j :=$	$Equ_j :=$
$S_{sl} + Sml_{sl}$	Sh	Eq8
$S_u + Sml_u$	1.2·Sh	$Eq9_u$
$S_f + Sml_f$	1.8·Sh	$Eq9_f$
$S_e + \frac{Spl}{2}$	Sa	Eq10
$S_{sl} + S_e + Sml_{sl} + \frac{Spl}{2}$	Sa + Sh	Eq11
Snl"	2·Sy	Ad1
$\frac{Q1''}{2 \cdot L1 \cdot La} + \frac{Q2''}{2 \cdot L2 \cdot Lb} + Mt'''$	Sy	Ad2
$\frac{W''}{Aw_{WC}} + \frac{Ml''}{Zwl_{WC}} + \frac{Mn''}{Zwn_{WC}} + \frac{2 \cdot (Q1'' + Q2'')}{Aw_{WC}} + \frac{Mt''}{Zwt_{WC}}$	2·Sy	Ad3
$\left[\left(\frac{W''}{Aw_{WC}} \right)^2 + 4 \cdot \left(\frac{Q1'' + Q2''}{Aw_{WC}} + \frac{Mt''}{Zwt_{WC}} \right)^2 \right]^{0.5}$	Sy	Ad4

Code Equations $Equ_j :=$	Calculated Stress	Allowable Stress	Acceptance
Eq8	1808	15000	1
$Eq9_u$	0	18000	1
$Eq9_f$	6286	27000	1
Eq10	1535	22500	1
Eq11	3343	37500	1
Ad1	5366	70000	1
Ad2	1931	35000	1
Ad3	4488	70000	1
Ad4	2040	35000	1

$Calc_Stress = \begin{bmatrix} 1808 \\ 0 \\ 6286 \\ 1535 \\ 3343 \\ 5366 \\ 1931 \\ 4488 \\ 2040 \end{bmatrix} \cdot psi$ $Allow_Stress = \begin{bmatrix} 15000 \\ 18000 \\ 27000 \\ 22500 \\ 37500 \\ 70000 \\ 35000 \\ 70000 \\ 35000 \end{bmatrix} \cdot psi$ $Equ = \begin{bmatrix} 1 \\ 1 \\ 1 \\ 1 \\ 1 \\ 1 \\ 1 \\ 1 \\ 1 \end{bmatrix}$

Reference

AltraLug Version 1.1 Copyright (c) 1995 Altran Corporation

Trunnion on Straight Pipe - Trunnion Evaluation

3)- Filename and file lock date

Match the filename and the lock date in the authentication index ? Yes ✓ No___

THIS COMPUTERIZED CALCULATION HAS BEEN CONFIRMED BY:

☒ DETAILED CHECKING OF ALL FORMULATION

☐ COMPARISON TO AN IDENTICAL VERIFIED FILE IN:

_____ BY: J. BREM DATE: 12/18/00

APL.MCD

Pg 3 of 8-15-95

ITEM NO	NO REQ'D	PART NO.	SIZE	DESCRIPTION	MATERIAL
1	2	2540	R/11-6	SNUBBER, STROKE = 5", ℄ = 17⅛", MVMT = 1/4" (C)	
				P-P = 3'-2⅜" (BY M-218 A SUPPLIER)	
2	1	C.S.	6"	SPECIAL RISER CLAMP, C-C = 18", TEMP = 265°	
				O.D. = 6.625, CLAMP MAT'L = C.S. (BY M-218 A SUPPLIER)	
3	2		W6x20	3'-10" LG. (BY M-216 SUPPLIER)	
4	2		W6x20	4'-8½" LG.	
5	2		W8x40	3'-9" LG.	
6	2		¼"x12"x12"	PL.	SA515, GR65
7	8		1"x1¼"x1¼"	LUG	
8	8		⅜"x3⅝"x7 11/16"	PL	

NOTES: 1) THIS DWG REPLACES O-GN02-R013/251(Q) R/3
2) FOR DOCUMENT CLARITY, REV. 0-3 OMITTED
3) USE ITEMS 1-3 & 5-8 FROM O-GN02-R013/251(Q) R/3

FORCES #	FX(SNUB)	FY	FZ
POS.	3200	-	-
NEG.	3200	-	-

MVMTS. "	X	Y	Z
THERMAL	-0.025	-0.001	0.001
SEISMIC	0.148 / -	0.019	0.033

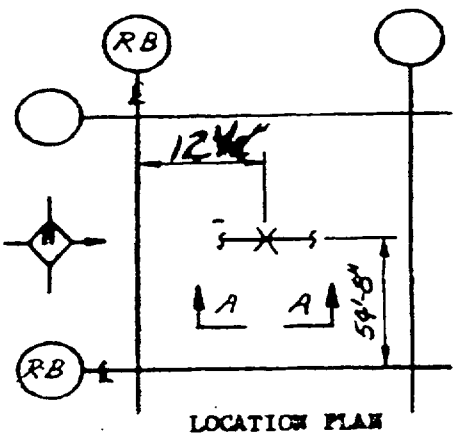

LOCATION PLAN
AREA /

PROBLEM NO. P-201 STRESS NO. -

ISSUE 5

DATA PT. 409 NUCLEAR CLASS 3

NOTE: All welds for nuclear supports to be visually inspected unless noted otherwise

Return B

Altran Report 12
96227-TR-03 Rev. 0
Att./Appx. H Sh. H43

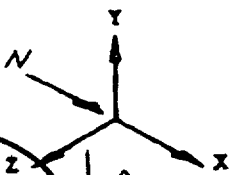

7 TSB 12/12/00

REV. ORG	REV.	REASON	DESCRIPTION	DWN	CHK	CHG	APPVL DATE
	7		REV. PER CCP 06017	JRP			

WOLF CREEK
NUCLEAR OPERATING CORPORATION

REF. DWGS. ISO M-13GN02
PIPE
STEEL C-1C2611

DRAWING NO. M-16GN02

HANGER NO. 1-GN02-R013/251(Q)

REV. 7

PIPE SUPPORTS
CONTAINMENT COOLING SYSTEM
REACTOR BUILDING TRAIN "B"

PAGE 1 OF 3

DFN-ATS/gaQ2cQ13_1.dgn
REF DFN-ATS/gaQ2cQ13_1.cit

8 1/2X11 A SIZE

LEVEL 1 5 1 3 3 3 6 0

PSC-

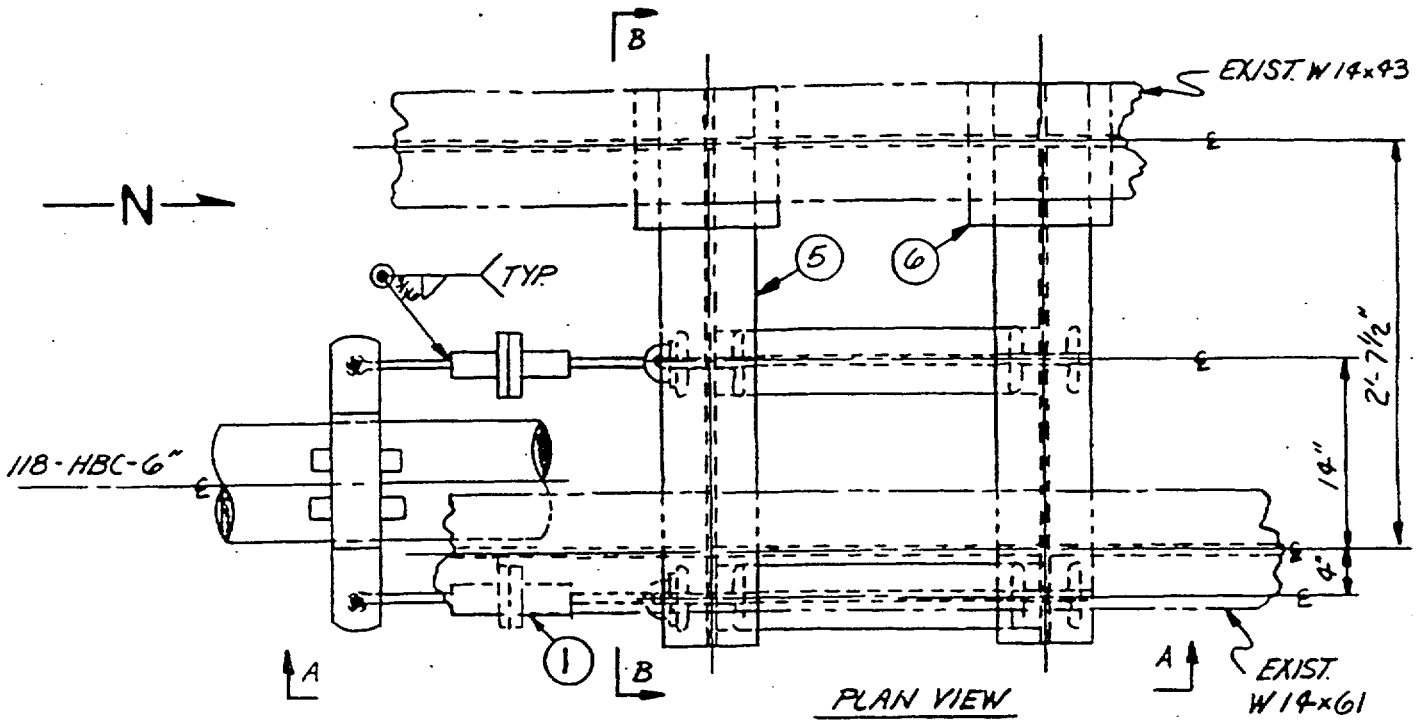

PLAN VIEW
AT EL. 2063'-6"

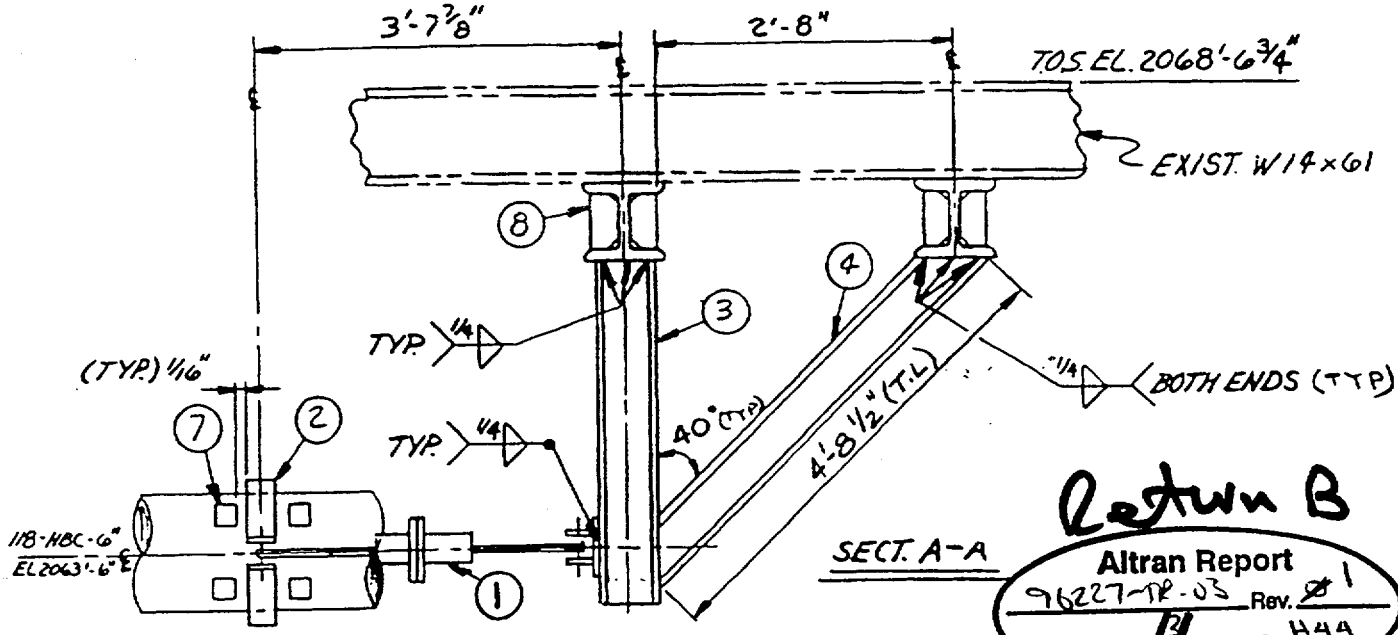

SECT. A-A

Return B

Altran Report
96227-TR-03 Rev. 1
Att./Appx. H Sh H49

1
12/12/99

WOLF CREEK NUCLEAR OPERATING CORPORATION		REF. DWGS.	ISO M-13GN02 PIPE STEEL C-1C2611
DRAWING NO. M-16GN02		HANGER NO.	REV.
PIPE SUPPORTS CONTAINMENT COOLING SYSTEM REACTOR BUILDING TRAIN "B"		1-GN02-R013/251(Q) PAGE 2 OF 3	6

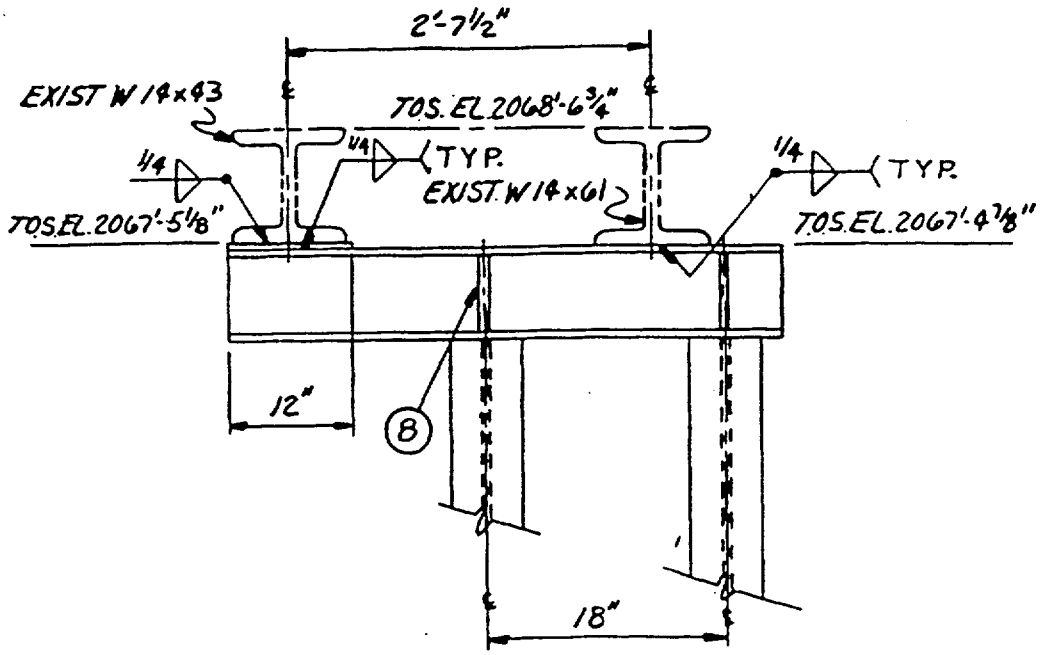

SECT. B-B

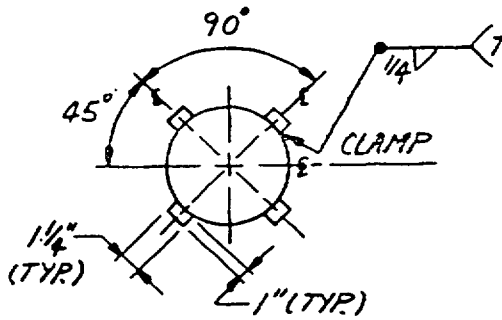

LUG DETAIL

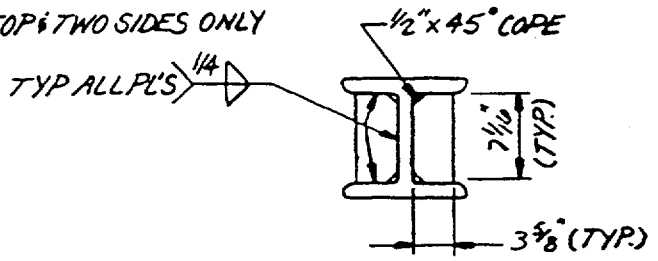

DETAIL OF ITEM 8

Return B

Altran Report
96227-TR-03 Rev. 0 1
Att./Appx. B Sh. H45

1

12/12/00

WOLF CREEK NUCLEAR OPERATING CORPORATION		REF. DWGS.	ISO M-13GN02 PIPE STEEL C-1C2611
DRAWING NO. M-16GN02		HANGER NO.	REV.
PIPE SUPPORTS CONTAINMENT COOLING SYSTEM REACTOR BUILDING TRAIN "B"		1-GN02-R013/251(Q) PAGE 3 OF 3	6

WOLF CREEK NUCLEAR OPERATING CORPORATION		CALCULATION / ANALYSIS SHEET
STATION / UNIT Wolf Creek Nuclear Plant	CALCULATION NO. 96227-TR-03, Rev. 1 ATTACHMENT H	PAGE H-46 OF ~~H~~
PREPARER / DATE: [illegible] 12/12/00	REVIEWER / DATE: J. [illegible] 12/13/00	
SUBJECT OF COMPUTATION: Train B Hanger R007		MOD. NO / PROJ. NO.
		COMPONENT DESCRIPTION:

Reference

AltraLug Version 1.1 Copyright (c) 1995 Altran Corporation Filename R007_TRB.MCD

Lug on Straight Pipe - Input Parameters

This program was verified in accordance with the Altran Quality Assurance Manual, this document develops local stresses in straight pipe due to a rectangular welded attachment in accordance with Altran document 92117-C-01, Rev. 2 .

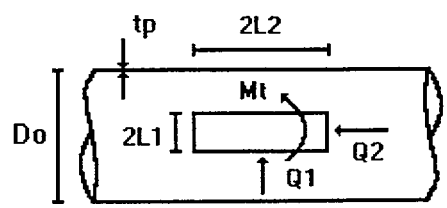

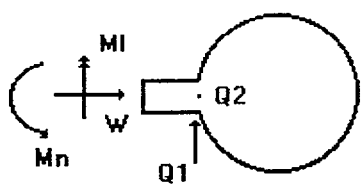

Input Values (Key Down)

Pipe Properties:

Diameter $Do := 10.75 \cdot in$

Thickness $tp := 0.365 \cdot in$

Lug Properties:

$L1 := 4.50 \cdot in$

$L2 := 4.00 \cdot in$

Note that the pad is sufficiently stiffened by the pipe trunnion so that its dimensions can be used for the purposes of this calculation.

Weld Type (WT):

1 = Fillet Weld
2 = Full or Partial Penetration Weld

$WT := 1$

Weld Size (tw): $tw := 0.25 \cdot in$

Weld Configuration (WC):

2 = Welded on Two Sides,
3 = Welded on Three Sides
4 = Welded on Four Sides

$WC := 2$

Note: Enter WC:=4 for Full Penetration Weld

Lug Loads (at the lug/pipe interface):

Design	Upset	Faulted	Thermal
$W_{sl} := 0 \cdot lbf$	$W_u := 0 \cdot lbf$	$W_f := 0 \cdot lbf$	$W_e := 0 \cdot lbf$
$Q1_{sl} := 0 \cdot lbf$	$Q1_u := 0 \cdot lbf$	$Q1_f := 1485 \cdot lbf$	$Q1_e := 0 \cdot lbf$
$Q2_{sl} := 0 \cdot lbf$	$Q2_u := 0 \cdot lbf$	$Q2_f := 0 \cdot lbf$	$Q2_e := 0 \cdot lbf$
$Mt_{sl} := 0 \cdot lbf \cdot in$	$Mt_u := 0 \cdot lbf \cdot in$	$Mt_f := 0 \cdot lbf \cdot in$	$Mt_e := 0 \cdot lbf \cdot in$
$Ml_{sl} := 0 \cdot lbf \cdot in$	$Ml_u := 0 \cdot lbf \cdot in$	$Ml_f := 0 \cdot lbf \cdot in$	$Ml_e := 0 \cdot lbf \cdot in$
$Mn_{sl} := 0 \cdot lbf \cdot in$	$Mn_u := 0 \cdot lbf \cdot in$	$Mn_f := 5940 \cdot lbf \cdot in$	$Mn_e := 0 \cdot lbf \cdot in$

Piping Stress Analysis Information: $S_{sl} := 4731 \cdot psi$ $S_u := 0 \cdot psi$ $S_f := 8006 \cdot psi$

Material Allowables:

	Pipe Material	Lug Material	$S_e := 711 \cdot psi$
Hot Allowable	$SH_0 := 15000 \cdot psi$	$SH_1 := 16200 \cdot psi$	
Cold Allowable	$SC_0 := 15000 \cdot psi$	$SC_1 := 16200 \cdot psi$	
Yield Strength	$SY_0 := 35000 \cdot psi$	$SY_1 := 35000 \cdot psi$	

End of Input

WOLF CREEK NUCLEAR OPERATING CORPORATION		CALCULATION / ANALYSIS SHEET
STATION / UNIT Wolf Creek Nuclear Plant	CALCULATION NO. 96227-TR-03, Rev. 1 ATTACHMENT H	PAGE H-47 OF ~~H~~
PREPARER / DATE: DSB 12/12/00	REVIEWER / DATE: J. Bu 12/13/00	
SUBJECT OF COMPUTATION: Train B Hanger R007		MOD. NO / PROJ. NO.
		COMPONENT DESCRIPTION:

Reference

AltraLug Version 1.1 Copyright (c) 1995 Altran Corporation

Lug on Straight Pipe - Calculated Parameters

Geometric Parameters:

$\gamma = 14.226$ $\beta 1 = 0.867$ $\beta 2 = 0.77$

$La = 0.365 \cdot in$ $Lb = 0.365 \cdot in$ $Lc = 4 \cdot in$ $Ld = 4.5 \cdot in$

$Al = 72 \cdot in^2$ $Zll = 96 \cdot in^3$ $Zln = 108 \cdot in^3$

Thrust Parameters:

$Ao_t = 2.2$ $\theta_t = 40 \cdot deg$ $Xo_t = 0$ $Yo_t = 0.05$

$X1_t = -0.062$ $Y1_t = -0.063$ $\eta_t = 0.088$

Longitudinal Parameters:

$Ao_l = 2$ $\theta_l = 50 \cdot deg$ $Xo_l = -0.45$ $Yo_l = -0.55$

$X1_l = -0.512$ $Y1_l = -0.663$ $\eta_l = 0.837$

Circumferential Parameters:

$Ao_n = 1.8$ $\theta_n = 40 \cdot deg$ $Xo_n = -0.75$ $Yo_n = -0.6$

$X1_n = -0.812$ $Y1_n = -0.713$ $\eta_n = 1.08$

Stress Indices:

$B_t = 6.299$ $B_l = 7.624$ $B_n = 59.161$

$C_t = 9.448$ $C_l = 11.436$ $C_n = 88.741$

Weld Parameters

$Aw_{WC} = 2.828 \cdot in^2$ $Zwn_{WC} = 12.726 \cdot in^3$ $J_{WC} = 72.35 \cdot in^4$

$Zwl_{WC} = 3.771 \cdot in^3$ $Zwt_{WC} = 12.017 \cdot in^3$ $Cw_{WC} = 6.021 \cdot in$

WOLF CREEK NUCLEAR OPERATING CORPORATION		CALCULATION / ANALYSIS SHEET
STATION / UNIT: Wolf Creek Nuclear Plant	CALCULATION NO. 96227-TR-03, Rev. 1 ATTACHMENT H	PAGE H-48 OF ~~H~~
PREPARER / DATE: 12/12/00	REVIEWER / DATE: J. Bu 12/13/00	
SUBJECT OF COMPUTATION: Train B Hanger R.007		MOD. NO / PROJ. NO.
		COMPONENT DESCRIPTION:

Reference

AltraLug Version 1.1 Copyright (c) 1995 Altran Corporation

Lug on Straight Pipe - Limitations and Local Stresses

Limitations of Applicability

Review Yes/No
Check Lines

(1) The long side of the lug (2xL2) must be at least three times the length of the short side (2xL1).

Limit1 = 0 (1 = OK, 0 = Not Acceptable)

(2) Attachment and pipe material moduli of elasticity and coefficients for thermal expansion must be essentially the same. Yes___No___

(3) Geometric Parameter Limitations

(a) Beta1 < 0.5 $\beta 1 = 0.867$

Limit3a = 0 (1 = OK, 0 = Not Acceptable)

(b) Beta2 < 0.5 $\beta 2 = 0.77$

Limit3b = 0 (1 = OK, 0 = Not Acceptable)

(c) Beta1 x Beta2 < 0.075 $\beta 1 \cdot \beta 2 = 0.668$

Limit3c = 0 (1 = OK, 0 = Not Acceptable)

See second calculation where circular trunnion is assumed welded directly to pipe surface.

(4) No other attachment shall occur within the following distance Yes___No___

Limit4 = 1.377 in

(5) Pipe diameter to thickness ratio (Do/tp < 100) $\frac{Do}{tp} = 29.452$

Limit5 = 1 (1 = OK, 0 = Not Acceptable)

ARE ALL LIMITATIONS ACCEPTABLE? Yes ✓ No___

See Note above.

Note: If any of the above limitations are unacceptable refer to the User Manual, Section 4.0 for assistance.

Local Pipe Wall Stresses

$Sml_{sl} = 0$ psi $Sml_u = 0$ psi $Sml_f = 3706$ psi

$Spl = 0$ psi $Snl = 0$ psi $Snl'' = 5333$ psi

AltraLug Version 1.1 Copyright (c) 1995 Altran Corporation

Lug on Straight Pipe - Code Evaluation

Design ($S_{sl} + S_{ml} < Sh$)

$S_{sl} + Sml_{sl} = 4731$ psi $\qquad Sh = 15000$ psi

$Eq8 = 1$ (1 = OK, 0 = Not Acceptable)

Upset ($S_u + S_{ml} < 1.2\ Sh$)

$S_u + Sml_u = 0$ psi $\qquad 1.2 \cdot Sh = 18000$ psi

$Eq9_u = 1$ (1 = OK, 0 = Not Acceptable)

Faulted ($S_f + S_{ml} < 1.8\ Sh$)

$S_f + Sml_f = 11712$ psi $\qquad 1.8 \cdot Sh = 27000$ psi

$Eq9_f = 1$ (1 = OK, 0 = Not Acceptable)

Thermal ($S_e + S_{pl}/2 < Sa$)

$S_e + \frac{Spl}{2} = 711$ psi $\qquad Sa = 22500$ psi

$Eq10 = 1$ (1 = OK, 0 = Not Acceptable)

Design plus Thermal ($S_{sl} + S_e + S_{ml} + S_{pl}/2 < (Sa + Sh)$)

$S_{sl} + S_e + Sml_{sl} + \frac{Spl}{2} = 5442$ psi $\qquad Sa + Sh = 37500$ psi

$Eq11 = 1$ (1 = OK, 0 = Not Acceptable)

AltraLug Version 1.1 Copyright (c) 1995 Altran Corporation

Lug on Straight Pipe - Lug Evaluation

Additional Equation (Snl" < 2.0 Sy)

$Snl'' = 5333 \cdot psi$ $\qquad$ $2.0 \cdot Sy = 70000 \cdot psi$

$Ad1 = 1$ (1 = OK, 0 = Not Acceptable)

Additional Equation (Q1"/2L1La + Q2"/2L2Lb + Mt"' < Sy)

$$\frac{Q1''}{2 \cdot L1 \cdot La} + \frac{Q2''}{2 \cdot L2 \cdot Lb} + Mt''' = 452 \cdot psi \qquad Sy = 35000 \cdot psi$$

$Ad2 = 1$ (1 = OK, 0 = Not Acceptable)

The following additional equations require satisfaction for weld stresses

$$\frac{W''}{Aw_{WC}} + \frac{Ml''}{Zwl_{WC}} + \frac{Mn''}{Zwn_{WC}} + \frac{2 \cdot (Q1'' + Q2'')}{Aw_{WC}} + \frac{Mt''}{Zwt_{WC}} = 1517 \cdot psi$$

$2 \cdot Sy = 70000 \cdot psi$

$Ad3 = 1$ (1 = OK, 0 = Not Acceptable)

$$\left[\frac{W''}{Aw_{WC}}^{2} + 4 \cdot \frac{Q1'' + Q2''}{Aw_{WC}} + \frac{Mt''}{Zwt_{WC}}^{2} \right]^{0.5} = 1050 \cdot psi \qquad Sy = 35000 \cdot psi$$

$Ad4 = 1$ (1 = OK, 0 = Not Acceptable)

WOLF CREEK NUCLEAR OPERATING CORPORATION		CALCULATION / ANALYSIS SHEET
STATION / UNIT Wolf Creek Nuclear Plant	CALCULATION NO. 96227-TR-03, Rev. 1 ATTACHMENT H	PAGE H-51 OF ~~H~~
PREPARER / DATE: 12/12/00	REVIEWER / DATE: J. Bu 12/13/00	
SUBJECT OF COMPUTATION: Train B Hanger R007		MOD. NO / PROJ. NO.
		COMPONENT DESCRIPTION:

Reference

AltraLug Version 1.1 Copyright (c) 1995 Altran Corporation

Trunnion on Straight Pipe - Trunnion Evaluation

SUMMARY

1)- Limitations of applicability

Are all limitations acceptable ? Yes ✓ No___ See previous note.

2)- Code evaluation $j := 0..8$

$Calc_Stress_j :=$	$Allow_Stress_j :=$	$Equ_j :=$
$S_{sl} + Sml_{sl}$	Sh	Eq8
$S_u + Sml_u$	1.2·Sh	$Eq9_u$
$S_f + Sml_f$	1.8·Sh	$Eq9_f$
$S_e + \frac{Spl}{2}$	Sa	Eq10
$S_{sl} + S_e + Sml_{sl} + \frac{Spl}{2}$	Sa + Sh	Eq11
Snl"	2·Sy	Ad1
$\frac{Q1''}{2 \cdot L1 \cdot La} + \frac{Q2''}{2 \cdot L2 \cdot Lb} + Mt'''$	Sy	Ad2
$\frac{W''}{Aw_{WC}} + \frac{Ml''}{Zwl_{WC}} + \frac{Mn''}{Zwn_{WC}} + \frac{2 \cdot (Q1'' + Q2'')}{Aw_{WC}} + \frac{Mt''}{Zwt_{WC}}$	2·Sy	Ad3
$\left[\left(\frac{W''}{Aw_{WC}} \right)^2 + 4 \cdot \left(\frac{Q1'' + Q2''}{Aw_{WC}} + \frac{Mt''}{Zwt_{WC}} \right)^2 \right]^{0.5}$	Sy	Ad4

Code Equations $Equ_j :=$	Calculated Stress $Calc_Stress =$	Allowable Stress $Allow_Stress =$	Acceptance $Equ =$
Eq8	4731	15000	1
$Eq9_u$	0	18000	1
$Eq9_f$	11712	27000	1
Eq10	711	22500	1
Eq11	5442	37500	1
Ad1	5333	70000	1
Ad2	452	35000	1
Ad3	1517	70000	1
Ad4	1050	35000	1

psi psi

Reference

AltraLug Version 1.1 Copyright (c) 1995 Altran Corporation

Trunnion on Straight Pipe - Trunnion Evaluation

3)- Filename and file lock date

Match the filename and the lock date in the authentication index ? Yes ✓ No___

THIS COMPUTERIZED CALCULATION HAS BEEN CONFIRMED BY:

☒ DETAILED CHECKING OF ALL FORMULATION

☐ COMPARISON TO AN IDENTICAL VERIFIED FILE IN:

_____ BY: J. Brem DATE: 12/18/00

APL.MCD

AltraLug Version 1.1

Copyright (c) 1995 Altran Corporation

Filename R007CIRB.MCD

Trunnion on Straight Pipe - Input Parameters

This program was verified in accordance with the Altran Quality Assurance Manual, this document develops local stresses in straight pipe due to a hollow circular welded attachment in accordance with Altran document 92117-C-01, Rev. 2 .

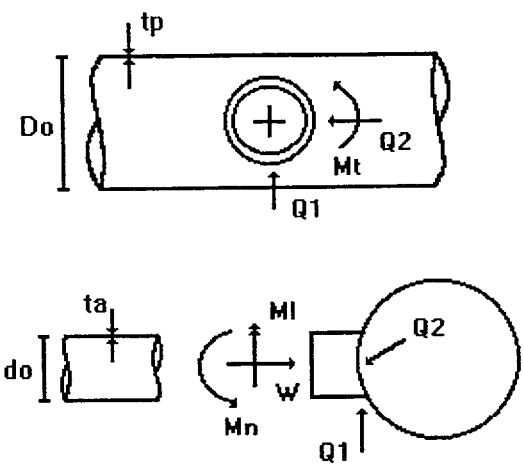

Input Values (Key Down)

Pipe Properties:

Diameter $Do := 10.75 \cdot in$

Thickness $Tp := 0.365 \cdot in$

Trunnion Properties:

Diameter $do := 6.625 \cdot in$

Thickness $ta := 0.280 \cdot in$

Weld Type (WT):

1 = Fillet Weld
2 = Full Penetration Weld

$WT := 1$

Weld Size (tw):

$tw := 0.25 \cdot in$

Trunnion Loads (at the trunnion/pipe interface):

Design	Upset	Faulted	Thermal
$W_{sl} := 0 \cdot lbf$	$W_u := 0 \cdot lbf$	$W_f := 0 \cdot lbf$	$W_e := 0 \cdot lbf$
$Q1_{sl} := 0 \cdot lbf$	$Q1_u := 0 \cdot lbf$	$Q1_f := 1485 \cdot lbf$	$Q1_e := 0 \cdot lbf$
$Q2_{sl} := 0 \cdot lbf$	$Q2_u := 0 \cdot lbf$	$Q2_f := 0 \cdot lbf$	$Q2_e := 0 \cdot lbf$
$Mt_{sl} := 0 \cdot lbf \cdot in$	$Mt_u := 0 \cdot lbf \cdot in$	$Mt_f := 0 \cdot lbf \cdot in$	$Mt_e := 0 \cdot lbf \cdot in$
$Ml_{sl} := 0 \cdot lbf \cdot in$	$Ml_u := 0 \cdot lbf \cdot in$	$Ml_f := 0 \cdot lbf \cdot in$	$Ml_e := 0 \cdot lbf \cdot in$
$Mn_{sl} := 0 \cdot lbf \cdot in$	$Mn_u := 0 \cdot lbf \cdot in$	$Mn_f := 5940 \cdot lbf \cdot in$	$Mn_e := 0 \cdot lbf \cdot in$

Piping Stress Analysis Information: $S_{sl} := 4731 \cdot psi$ $S_u := 0 \cdot psi$ $S_f := 8006 \cdot psi$ $S_e := 711 \cdot psi$

Material Allowables:	Pipe Material	Trunnion Material
Hot Allowable	$SH_0 := 15000 \cdot psi$	$SH_1 := 16200 \cdot psi$
Cold Allowable	$SC_0 := 15000 \cdot psi$	$SC_1 := 16200 \cdot psi$
Yield Strength	$SY_0 := 35000 \cdot psi$	$SY_1 := 35000 \cdot psi$

End of Input

Reference

AltraLug Version 1.1 Copyright (c) 1995 Altran Corporation

Trunnion on Straight Pipe - Calculated Parameters

Geometric Parameters:

$A_T = 5.581 \cdot in^2$ $I_T = 28.142 \cdot in^4$

$Z_T = 8.496 \cdot in^3$ $A' = 2.791 \cdot in^2$ $J' = 8.496 \cdot in^3$

$\gamma = 14.726$ $\tau = 0.767$ $\beta = 0.616$

Stress Indices:

$C_w = 14.378$ $C_l = 2.842$ $C_n = 7.743$ $C_t = 1.993$

$B_w = 7.189$ $B_l = 1.421$ $B_n = 3.871$ $B_t = 0.997$

Weld Parameters

$Aw = 3.679 \cdot in^2$ $Zwn = 6.093 \cdot in^3$ $J = 40.365 \cdot in^4$

$Zwl = 6.093 \cdot in^3$ $Zwt = 12.186 \cdot in^3$ $Cw = 3.313 \cdot in$

WOLF CREEK NUCLEAR OPERATING CORPORATION		CALCULATION / ANALYSIS SHEET
STATION / UNIT Wolf Creek Nuclear Plant	CALCULATION NO. 96227-TR-03, Rev. 1 ATTACHMENT H	PAGE H-55 OF H
PREPARER / DATE: 12/12/00	REVIEWER / DATE: J. Bu 12/13/00	
SUBJECT OF COMPUTATION: Train B Hanger R007		MOD. NO / PROJ. NO.
		COMPONENT DESCRIPTION:

Reference

AltraLug Version 1.1 Copyright (c) 1995 Altran Corporation

Trunnion on Straight Pipe - Limitations and Local Stresses

Review Yes/No Check Lines

Limitations of Applicability

(1) The attachment is welded to the pipe by a fillet weld or a full penetration weld along the entire diameter. Yes ✓ No___

(2) Attachment and pipe material moduli of elasticity and coefficients for thermal expansion must be essentially the same. Yes ✓ No___

(3) Geometric Parameter Limitations

(a) 8.33 < Gamma < 50.0 $\gamma = 14.726$

Limit3a = 1 (1 = OK, 0 = Not Acceptable)

(b) 0.2 < Tau < 1.0 $\tau = 0.767$

Limit3b = 1 (1 = OK, 0 = Not Acceptable)

(c) 0.3 < Beta < 1.0 $\beta = 0.616$

Limit3c = 1 (1 = OK, 0 = Not Acceptable)

(4) The axis of the attachment is perpendicular to the run pipe. Yes ✓ No___

(5) No other attachment shall occur within the following distance Yes ✓ No___

Limit5 = 1.401 in

ARE ALL LIMITATIONS ACCEPTABLE? Yes ✓ No___

Note: If any of the above limitations are unacceptable refer to the User Manual, Section 4.0 for assistance.

Local Pipe Wall Stresses

$Smt_{sl} = 0$ psi $Smt_u = 0$ psi $Smt_f = 3239$ psi

$Snt = 0$ psi $Spt = 0$ psi $Snt'' = 2519$ psi

WOLF CREEK NUCLEAR OPERATING CORPORATION		CALCULATION / ANALYSIS SHEET
STATION / UNIT Wolf Creek Nuclear Plant	CALCULATION NO. 96227-TR-03, Rev. 1 ATTACHMENT H	PAGE H-56 OF ~~H~~
PREPARER / DATE: 12/12/00	REVIEWER / DATE: J. B 12/13/00	
SUBJECT OF COMPUTATION: Trunn B Hanger R007		MOD. NO / PROJ. NO.
		COMPONENT DESCRIPTION:

Reference

AltraLug Version 1.1 Copyright (c) 1995 Altran Corporation

Trunnion on Straight Pipe - Code Evaluation

Design ($S_{sl} + S_{mt} < Sh$)

$S_{sl} + Smt_{sl} = 4731 \cdot psi$ $Sh = 15000 \cdot psi$

$Eq8 = 1$ (1 = OK, 0 = Not Acceptable)

Upset ($S_u + S_{mt} < 1.2\ Sh$)

$S_u + Smt_u = 0 \cdot psi$ $1.2 \cdot Sh = 18000 \cdot psi$

$Eq9_u = 1$ (1 = OK, 0 = Not Acceptable)

Faulted ($S_f + S_{mt} < 1.8\ Sh$)

$S_f + Smt_f = 11245 \cdot psi$ ~~1.8~~ 2.4 $\cdot Sh = $ ~~27000~~ 36000 $\cdot psi$ 12/13/00

$Eq9_f = 1$ (1 = OK, 0 = Not Acceptable)

Thermal ($S_e + S_{pt}/2 < Sa$)

$S_e + \frac{Spt}{2} = 711 \cdot psi$ $Sa = 22500 \cdot psi$

$Eq10 = 1$ (1 = OK, 0 = Not Acceptable)

Design plus Thermal ($S_{sl} + S_e + S_{mt} + S_{pt}/2 < (Sa + Sh)$)

$S_{sl} + S_e + Smt_{sl} + \frac{Spt}{2} = 5442 \cdot psi$ $Sa + Sh = 37500 \cdot psi$

$Eq11 = 1$ (1 = OK, 0 = Not Acceptable)

Reference

AltraLug Version 1.1 Copyright (c) 1995 Altran Corporation

Trunnion on Straight Pipe - Trunnion Evaluation

Additional Equation (Snt" < 2 Sy)

$Snt'' = 2519 \cdot psi$ $\qquad 2 \cdot Sy = 70000 \cdot psi$

$Ad1 = 1$ (1 = OK, 0 = Not Acceptable)

Additional Equation (Q1"/A' + Q2"/A' + Mt" < Sy)

$$\frac{Q1''}{A'} + \frac{Q2''}{A'} + \frac{Mt''}{J'} = 532 \cdot psi \qquad Sy = 35000 \cdot psi$$

$Ad2 = 1$ (1 = OK, 0 = Not Acceptable)

The following additional equations require satisfaction for weld stresses

$$\frac{W''}{Aw} + \frac{Ml''}{Zwl} + \frac{Mn''}{Zwn} + \frac{\left(Q1''^2 + Q2''^2\right)^{0.5}}{Aw} + \frac{Mt''}{Zwt} = 1379 \cdot psi \qquad 2 \cdot Sy = 70000 \cdot psi$$

$Ad3 = 1$ (1 = OK, 0 = Not Acceptable)

$$\left[\left(\frac{W''}{Aw}\right)^2 + 4 \cdot \left(\frac{Q1'' + Q2''}{Aw} + \frac{Mt''}{Zwt}\right)^2\right]^{0.5} = 807 \cdot psi \qquad Sy = 35000 \cdot psi$$

$Ad4 = 1$ (1 = OK, 0 = Not Acceptable)

Reference

AltraLug Version 1.1 Copyright (c) 1995 Altran Corporation

Trunnion on Straight Pipe - Trunnion Evaluation

SUMMARY

1)- Limitations of applicability

Are all limitations acceptable ? Yes ✓ No____

2)- Code evaluation $j := 0..8$

$Calc_Stress_j :=$	$Allow_Stress_j :=$	$Equ_j :=$
$S_{sl} + Smt_{sl}$	Sh	Eq8
$S_u + Smt_u$	1.2·Sh	$Eq9_u$
$S_f + Smt_f$	1.8·Sh	$Eq9_f$
$S_e + \frac{Spt}{2}$	Sa	Eq10
$S_{sl} + S_e + Smt_{sl} + \frac{Spt}{2}$	Sa + Sh	Eq11
Snt"	2·Sy	Ad1
$\frac{Q1''}{A'} + \frac{Q2''}{A'} + \frac{Mt''}{J'}$	Sy	Ad2
$\frac{W''}{Aw} + \frac{Ml''}{Zwl} + \frac{Mn''}{Zwn} + \frac{(Q1''^2 + Q2''^2)^{0.5}}{Aw} + \frac{Mt''}{Zwt}$	2·Sy	Ad3
$\left[\left(\frac{W''}{Aw}\right)^2 + 4\cdot\left(\frac{Q1'' + Q2''}{Aw} + \frac{Mt''}{Zwt}\right)^2\right]^{0.5}$	Sy	Ad4

Code Equations $Equ_j :=$	Calculated Stress	Allowable Stress	Acceptance
Eq8	4731	15000	1
$Eq9_u$	0	18000	1
$Eq9_f$	11245	27000	1
Eq10	711	22500	1
Eq11	5442	37500	1
Ad1	2519	70000	1
Ad2	532	35000	1
Ad3	1379	70000	1
Ad4	807	35000	1

$Calc_Stress = \begin{bmatrix} 4731 \\ 0 \\ 11245 \\ 711 \\ 5442 \\ 2519 \\ 532 \\ 1379 \\ 807 \end{bmatrix} \cdot psi$ $\quad Allow_Stress = \begin{bmatrix} 15000 \\ 18000 \\ 27000 \\ 22500 \\ 37500 \\ 70000 \\ 35000 \\ 70000 \\ 35000 \end{bmatrix} \cdot psi$ $\quad Equ = \begin{bmatrix} 1 \\ 1 \\ 1 \\ 1 \\ 1 \\ 1 \\ 1 \\ 1 \\ 1 \end{bmatrix}$

Reference

AltraLug Version 1.1 Copyright (c) 1995 Altran Corporation

Trunnion on Straight Pipe - Trunnion Evaluation

3)- Filename and file lock date

Match the filename and the lock date in the authentication index ? Yes ✓ No___

THIS COMPUTERIZED CALCULATION HAS BEEN CONFIRMED BY:

☒ DETAILED CHECKING OF ALL FORMULATION

☐ COMPARISON TO AN IDENTICAL VERIFIED FILE IN:

_____ BY: J. Brem DATE: 12/18/00

_APT.MCD

ITEM NO	NO REQ'D	PART NO.	SIZE	DESCRIPTION	MATERIAL
	1		W6x20 5'-4" LG.	(BY M-216 SUPPLIER)	
	1		W6x20 7'-2 1/8" LG.		
3	2	2540	R11-6 SNUBBER, STROKE: 5", L: 16 7/8", P-P: 3'-0 1/8",		
			MVMT: 0.440 (T)	(BY M-218A SUPPLIER)	
4	2	2640-6	R11-6" PIPE CLAMP		
5	2		6"Ø PIPE STANCHION, SCH 40, D: 12" R: 5 7/8", E: 5 1/8"		SA 106, GR.B
				(BY M-218A SUPPLIER)	
6	2		3/8"x8 1/2"x8" R	(BY M-218A SUPPLIER)	SA 515, GR.65

Altran Report
96227-MR.03 Rev. ~~0~~ 1
Att./Appx. A Sh. H60
Return B
12/12/00

4

FORCES #	FX SNUB	FY	FZ
POS.	6000	—	—
NEG.	6000	—	—

MVMTS. "	X	Y	Z
RMAL	-0.471	0.001	-0.009
	0.079	-0.003	0.054
SEISMIC	—	0.005	0.033

4

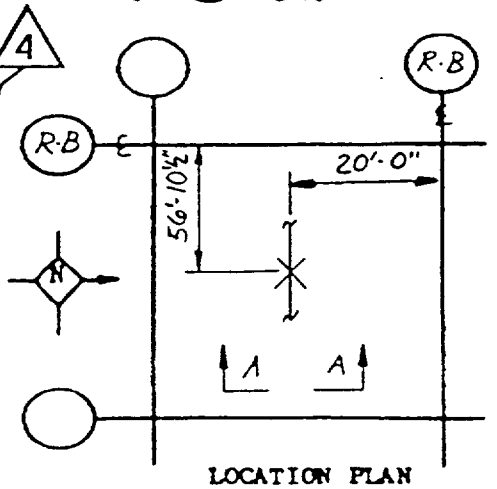

LOCATION PLAN
AREA 2

PROBLEM NO. P-201 STRESS NO. —

ISSUE 5

DATA PT. 217 NUCLEAR CLASS 3

NOTES:
1. ALL WELDS FOR NUCLEAR SUPPORTS TO BE VISUALLY INSPECTED UNLESS NOTED OTHERWISE
2. THIS DWG. REPLACES 0-GN02-R007/252(Q), REV.3
3. FOR DOCUMENT CLARITY REV.0 & 3 OMITTED.
4. USE ITEMS 1 TO 6 FROM 0-GN02-R007/252(Q). REV.3

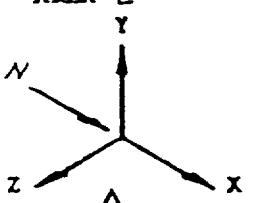

4

REV ORG	REV	RLSD	DESCRIPTION	DWN	CHK	ENG	APPVL DATE
	4	DC2 8/26/94	REV. TO INC. PMPCN M-798-W-M-16GN02(Q)-24-01 PER PMR 03478 CLOSE OUT & AS NOTED. CAD DWG.	KAM	RP	RP	RPA 7/26/94

WOLF CREEK
NUCLEAR OPERATING CORPORATION

REF. DWGS. ISO M-13GN02
PIPE
STEEL C-1S2621

DRAWING NO.
M-16GN02

HANGER NO.

REV. 4

PIPE SUPPORTS
CONTAINMENT COOLING SYSTEM
REACTOR BUILDING TRAIN"B"

1-GN02-R007/252(Q)

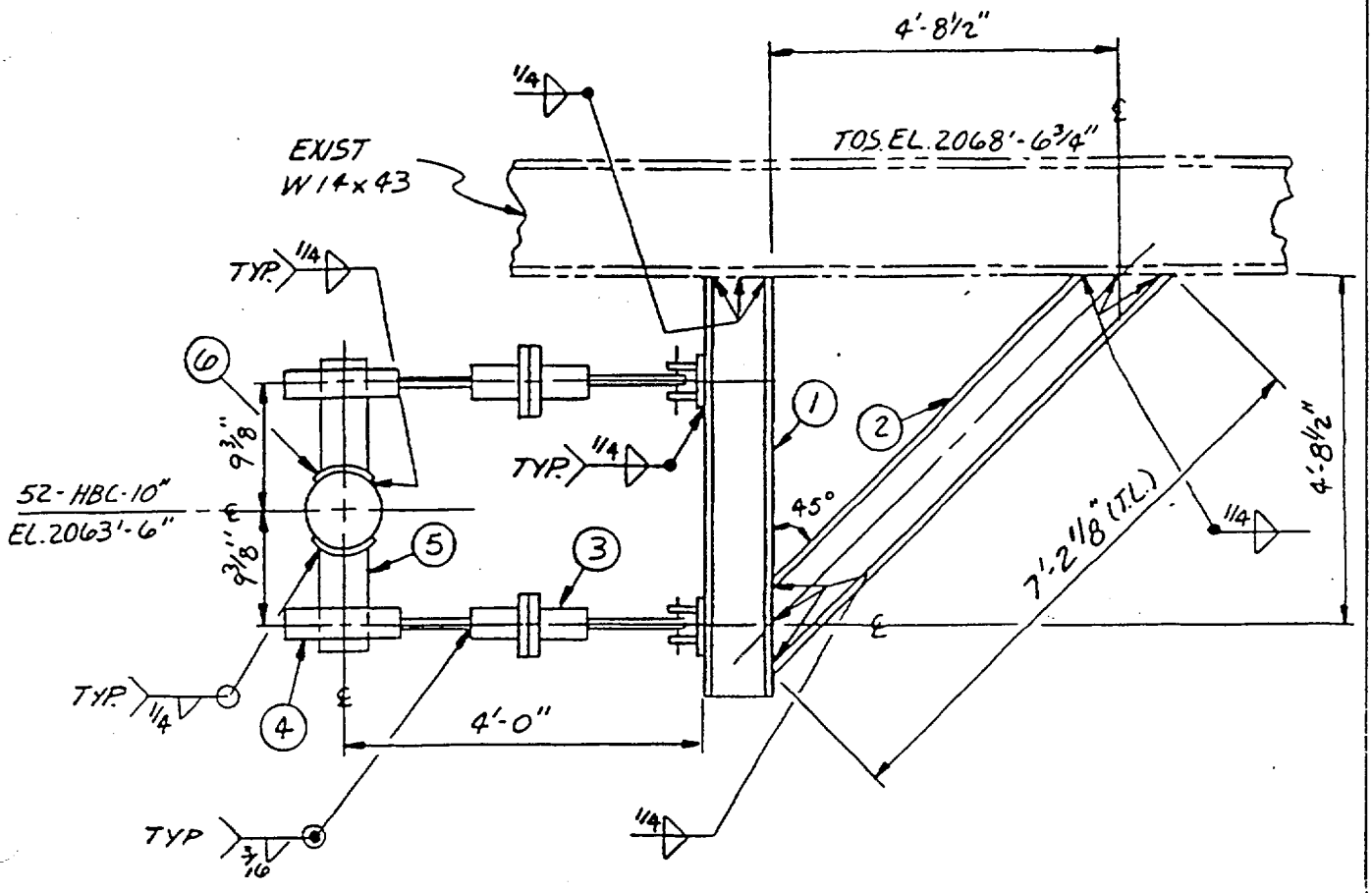

ELEVATION A-A

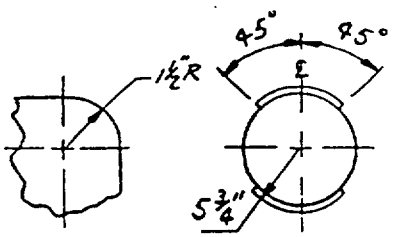

DETAIL OF ITEM 6

Return B

Altran Report
96227-TR-06 Rev. 1
Att./Appx. H Sh. H61

12/12/00

WOLF CREEK NUCLEAR OPERATING CORPORATION		REF. DWGS. ISO M-13GN02 PIPE STEEL C-1S2621	
DRAWING NO. M-16GN02		HANGER NO.	REV.
PIPE SUPPORTS CONTAINMENT COOLING SYSTEM REACTOR BUILDING TRAIN "B"		1-GN02-R007/252(Q) PAGE 2 OF 2	4

GENERIC LETTER 96-06
CALCULATION 96227-TR-01
HYDRAULIC ANALYSIS

Wolf Creek Nuclear Operating Corporation

CONTAINMENT FAN COOLER RESPONSE TO A SIMULTANEOUS LOCA & LOOP EVENT

Technical Report. 96227-TR-01
Revision 4
Volume 1 of 1

Prepared for:

Wolf Creek Nuclear Operating Corporation
Wolf Creek Nuclear Plant

December, 2000

altran

altran

Report Record

REPORT No.: 96227-TR-01 **Rev. No.:** 4 **Sheet No.:** 2

QA Related: Yes ☒ No ☐ App. B ☒ ISO 9000 CGMP ☐ **Total Sheets:** 346 (Includes Att. A, B, C, D, E, F, G, H)

TITLE: Containment Fan Cooler Response to a Simultaneous LOCA and LOOP Event – Wolf Creek

CLIENT: Wolf Creek Nuclear Operating Corporation **FACILITY:** Wolf Creek Nuclear Plant

REV. DESCRIPTION: Rev. 4: Revised Title page, Report Record, and pages 4, 7, 8, 11, 12, 14, 15, 21, 25, 26, 29, 38, 41, 55, ~~and 41~~, added Verification (page 2A), Revision Description (page 2B), and Appendixes G and H to clarify the calculation of CIWH peak pressure pulses. PER P.O. 0709540

COMPUTER RUNS: **(Identified on Computer File Index):** **Yes** ☐ **N/A** ☒

Error reports evaluated by: **Date:**

Impacted by error reports: **No** ☐ **Yes** ☐ **(If Yes, attach explanation)**

Originator(s)	Date	Verifier(s)	Date
D. A. Van Duyne	12/11/00	G. Zysk	12/15/00
FOR M. Zweigle	12/15/00		

Verification: Verification is performed in accordance with EOP 3.4 as indicated below.

☒ Design review as documented on the following sheet ~~or~~

☐ Alternate calculation as documented in attachment or

☐ Qualification testing as documented in attachment or

APPROVED FOR RELEASE

PROJECT MANAGER: G. Zysk **Date:** 12/15/00

ENGINEERING MANAGER: FOR P. Bruck **Date:** 12/15/00

Verification Considerations (in accordance with EOP 3.4)

		Initials
1.	The inputs come from an appropriate and controlled source, and are clearly referenced.	GZ
2.	The inputs from uncontrolled sources or assumptions are properly justified and documented.	GZ
3.	The inputs or assumptions that are not adequately justified are identified for later confirmation.	GZ
4.	Design, analysis, testing, examination, and acceptance criteria are specified and complied with.	N/A
5.	Appropriate interface control was administered during the process of this report.	GZ
6.	The computer programs used are authorized for use and/or properly verified.	N/A
7.	Applicable codes, standards, or regulatory requirements are properly specified and complied with.	GZ
8.	The specified tests and examinations were performed by personnel with appropriate qualifications.	N/A
9.	All tests and examinations were performed in accordance with written procedures.	N/A
10.	Specimens are controlled by identification number and their traceability is maintained.	N/A
11.	The calibration of instrumentation is acceptable and properly recorded.	N/A
12.	The instruments that are used are recorded by name and identification number.	N/A
13.	The report is neat and legible and suitable for reproduction.	GZ
14.	The formatting and technical requirements of applicable procedures are complied with.	GZ
15.	Critical numerical computations have been checked in detail.	GZ
16.	The endorsements of all originators and verifiers have been properly recorded.	GZ
17.	Appropriate construction, operation, and/or maintenance considerations have been considered.	N/A
18.	The conclusions satisfy stated objectives, and they are consistent with the input.	GZ
19.	All material specified are compatible with their service environment.	N/A
20.	Procedural requirements for report revisions and subsequent reviews are complied with.	GZ

Clarify significant comments:

All comments are resolved and incorporated into the report except as noted here:

N/A			12/15/00
Originator's concurrence	Date	Verifier's concurrence	Date

altran

Revision Description

Report No. 96227-TR-01 **Rev.:** 4 **Sheet:** 2B

By: D. A. van Duyne **Date:** 12/11/00 **Chk:** CZ **Date:** 12/15/00

Rev. No.	Revision Description
0	Original Issue
1	Changes to pages 7, 9, 10, 27, 28, 29, and 35 to incorporate client comments.
2	Changes to page 36. Page 36A added.
3	Revised Sheets 1 through 41, 55 and D-1. Added Appendixes E and F
4	Revised Title page, Report Record, and pages 4, 7, 8, 11, 12, 14, 15, 21, 25, 26, 29, 38, 41, and 55; added Verification (page 2A), Revision Description (page 2B), and Appendixes G and H.

EXECUTIVE SUMMARY

An evaluation of the effects of a concurrent Loss of Coolant Accident (LOCA) and Loss-of-Offsite-Power (LOOP) on the Service Water (SW) system at the Wolf Creek Nuclear Plant has been completed. The objective of this evaluation was to determine if the effects of a LOCA occurring with a LOOP would create unacceptable waterhammer loads. The system was previously qualified for waterhammer resulting from LOOP and LOCA conditions. The results of our evaluation indicate that the LOOP and LOCA event will not result in waterhammer conditions that cause the Service Water System to exceed faulted allowables.

Altran Corporation
Technical Report No. 96227-TR-01
Revision 4

TABLE OF CONTENTS

Title Page 1
Report Record 2
Verification 2A
Revision Description 2B
Executive Summary 3
Table of Contents 4
List of Figures 5

1.0 SUMMARY 6
2.0 OBJECTIVE 7
3.0 LOOP/LOCA DESIGN BASIS AND ASSUMPTIONS 8
4.0 DISCUSSION OF THE LOOP/LOCA 9
4.1 Description of the System 9
4.2 Limiting Break 10
4.3Sequence of Events 11
4.4 Methodology 12
5.0 LOOP/LOCA ANALYSIS 13
5.1 Repressurization Curve Development 13
5.2 System Resistance Development 14
5.3 Volume and dh/dV Determinations 18
5.4 Condensation Induced Waterhammer Susceptibility 21
5.5 Condensation Induced Waterhammer Pressure Pulses 25
5.6 Column Closure Waterhammer Prediction 27
5.7 Flashing Flow Assessment 30
6.0 LOOP TEST EVALUATION 37
7.0 FLUID STRUCTURE INTERACTION 37
8.0 LOOP/LOCA ANALYSIS CONCLUSIONS & RECOMMENDATIONS 38
9.0 REFERENCES 39

APPENDICES 55
Appendix A – Pressurization Spreadsheet for Cases 1, 2 & 3 ..... A-1 to A-39
Appendix B – System Resistance Spreadsheet for Cases 1, 2 & 3 ..... B-1 to B-17
Appendix C – Sonic Velocity Spreadsheet ..... C-1 to C-3
Appendix D – Plant Data ..... D-1 to D-14
Appendix E – Test Results ..... E-1 to E-204
Appendix F – Fluid Structure Interaction ..... F-1 to F-8
Appendix G – CIWH ..... G-1 to G-14
Appendix H – Sonic Velocity ..... H-1 to H-5

Total Pages = 346

LIST OF FIGURES

The following figures are included as part of this evaluation:

Figure 1 - Containment Temperature Profile
Figure 2 - Containment Cooler Configuration
Figure 3A - A Train, A & C Cooler, Piping Configuration Inside Containment
Figure 3B - B Train, B Cooler, Piping Configuration Inside Containment
Figure 3C - B Train, D Cooler, Piping Configuration Inside Containment
Figure 4A - Case 1 - Train A Pressure (SW supply isolated)
Figure 4B - Case 2 - Train B Pressure (SW supply open)
Figure 4C - Case 3 - Train B Pressure (SW supply isolated)
Figure 5 - Simplified Flow Resistance Diagram (refer to Appendix B)
Figure 6 - Sonic Velocity Change With Temperature Rise
Figure 7 - Impact Velocity Curve from Reference 17
Figure 8 - Train "A" ADLPIPE Structural Assessment Model
Figure 9 - ADLPIPE Structural Model Segment Forcing Functions Condensate Waterhammer

1.0 SUMMARY

The evaluation reported herein considers a LOCA that is assumed to occur concurrently with a LOOP. The LOCA analyzed in this analysis is a double ended guillotine break of the reactor coolant loop as defined in the FSAR [1]. This is the enveloping condition for this analysis because it provides the greatest source of heat in containment. The effects of main steam line break was reviewed and found to be less limiting than the LOCA.

The LOCA fills the containment with saturated steam at a pressure that rapidly rises to 47.3 psig and the peak containment temperature reaches 306.1°F. During this same time all power is assumed to be lost to the Emergency Service Water (ESW) pumps and fans in the containment fan coolers. The water flow and air flow both coast down.

This results in a condition where heat is absorbed out of the containment atmosphere and deposited into the service water in the fan cooler. This analysis considers the potential for steam to be generated in the fan cooler and carefully examines each phase of the LOCA and LOOP event as it effects the SW system.

In addition to the analytical evaluation of the effects of a LOOP/LOCA, a test was performed in 1991 to determine the magnitude of a SW system Waterhammer resulting from a LOOP. This test is compared to the analysis to gage the accuracy of the analytical results.

2.0 OBJECTIVE

The objective of this evaluation was to develop differential peak pressure pulses which result from a LOCA and LOOP event. These peak pressure pulses generate transient forces in the piping segments of the Essential Service Water (ESW) system. 4

3.0 LOOP/LOCA DESIGN BASIS AND ASSUMPTIONS

SW Water

T_{SWi} = Maximum water inlet temperature to coolers=95°F [FSAR 9.2.1.2.2.1]

Q_{LOCA} = flow rate requirement to each cooler during LOCA=1000 gpm [1].

Q_{NORM} = flow rate to each cooler during normal operation=925 gpm [1] Lake level is 1988' maximum [5].

Containment

T_C = Containment temperature following LOOP with LOCA is as shown on attached Figure 1 and as listed in FSAR table 6.1.

Equipment Positions

Following LOOP with LOCA the following times apply:

time (sec)	**event**
0	-LOOP
	-LOCA
	-SW Pumps, ESW Pumps, Fans, and Valves loose power
12	-D/G's start
	-Valves begin stroking closed [4]:
	HV-23 & 25 ('A' SW supply isolation) - full open to closed
	HV-24 & 26 ('B' SW supply isolation) - full open to closed
	HV-39 & 41 ('A' SW return isolation) - throttled to closed
	HV-40 & 42 ('B' SW return isolation) - throttled to closed
	- Valves begin stroking open:
	HV-37 ('A' train ESW return to UHS) - throttled to open
	HV-38 ('B' train ESW return to UHS) - throttled to open
18	-HV-37 full open (max 6 sec open time)
25.5	-HV-38 full open (max 13.5 sec open time)
32	-"A" ESW Pump starts
37	-"B" ESW Pump starts
42	-HV-23,25,24,26,39,41,40, & 42 full closed (max 30 sec closures)

"A" and "B" train Containment Cooler discharge throttling valves HV-49 and HV-50 are throttled to 21% and 22% open to achieve 2470 gpm and 2730 gpm flow rates respectively [5]. Delayed pump start and closed containment isolation valves are considered to be beyond design basis. Although waterhammer loads may increase marginally under these scenarios, loads are not expected to increase beyond yield. 4

4.0 DISCUSSION OF THE LOOP/LOCA

4.1 Description of the System

At the Wolf Creek plant there are four containment fan coolers (two coolers per train). The containment fan cooler characteristics are described below [6,7]:

4 coolers
12 coils per cooler
32 tubes per coil
6 passes per tube
9 ft per pass
or 384 qty 54' long tubes per cooler
5/8" OD, 0.035" wall tubing

A fan cooler is shown schematically in Figure 2. The piping configuration for each train is different. The A and B train piping configurations inside containment are shown in Figures 3A, 3B, and 3C. The differences in piping configurations will require each train to be individually analyzed to find the largest waterhammer pressure pulse.

The heat sink for Wolf Creek is a manmade lake. A portion of the lake has a seismically qualified partial height dam that serves as the ESW ultimate heat sink (UHS) in the event of a LOCA. The two ESW trains are independent. Flow for each train is provided by a single ESW pump or by the Service Water (SW) system. Discharge can be either to the SW system return header or to the ESW system return header. The SW system return header releases into the Circulating Water (CW) system discharge tunnel and the ESW system return header releases to the UHS. During normal operation discharge is to both the CW system and UHS.

The ESW and SW pumps are equipped with discharge check valves. A single 14" pipe branches to two 10" pipes inside containment to supply the two coolers on a train. The discharge rejoins in a common 14" pipe before exiting containment. Flow and back pressure to the coolers are controlled with a butterfly valve and orifice on each train located outside containment.

During a LOOP with a LOCA, power is lost to the pumps, fans, and valves until the Diesel Generators are started and the loads are sequenced as shown previously in section 3.0.

4.2 Limiting Break

An analysis of water boiling in the fan coolers under LOCA accident conditions is presented in this report. The LOCA accident is more severe than the main steam line break (MSLB) environment, even though higher containment temperatures are attained in the latter case. The reason why the LOCA is more severe, even at a lower temperature, is due to several heat transfer considerations.

Heat transfer rates are a function of the following three factors:

1. The nature of the fluid
2. The temperature driving the heat transfer
3. The heat transfer coefficient

Each of these factors will be discussed.

1. In the LOCA, the fluid is a saturated mixture of air and water vapor. It is at its "dew point" and will begin to condense as soon as it comes in contact with a cold surface. In the MSLB the steam is superheated, and the entire mixture has to cool as a gas until the vapor reaches the saturation, or condensing, temperature. Even though the temperatures are high, the heat transfer rates are low in this environment.

2. The temperature driving force for condensing, where the latent heat of the steam is transferred to the heat exchangers, is the saturation temperature corresponding to the pressure of the steam. Since there is less steam in the containment vessel in the MSLB than in the LOCA accident, the pressure is lower and the saturation temperature is lower.

3. The heat transfer coefficient during condensing is proportional to its vapor to air ratio. Also, since the volume of liquid released during a LOCA is significantly greater than as a result of an MSLB, the heat transfer coefficient will be larger.

Since all conditions relating to heat release rate give lower rates for the MSLB accident, analysis of the LOCA provides the worst case conditions.

4.3 Sequence of Events

The postulated event is initiated by the simultaneous occurrence of a LOCA and a LOOP. The service water pumps and the containment cooler fans shut down due to the LOOP. Both the pumps and the fans coastdown. The temperature in the containment will rise as shown in Figure 1. The pump coasts down to nominally 14 psig discharge pressure in approximately 2 seconds which is typical of ESW systems.

The A & B ESW pumps restart 32 and 37 seconds respectively after initiation of a LOOP.

While the pumps are coasting down, the water in the cooler tubes will be heated. The heating soon causes boiling in the tubes as the saturation pressure is reached. The boiling expels the water in the cooler and creates a steam void in the cooler. Steaming does not continue in the cooler because the piping configuration at Wolf Creek allows complete draindown of the coolers. As there is no inventory of water to feed the boiling process, steam pressures do not rise after the cooler is voided. The steam in the coolers quickly reaches a superheated condition as the containment temperature continues to rise. The behavior of the steam in the piping adjacent to the coolers is governed by the expanding void space in the piping system. Once steam generation ceases, the pressure in the coolers and the piping will decrease as the void space in the piping system increases.

Figure 4A shows the cooler pressure that corresponds to this sequence of events (this curve corresponds to Case 1 of Appendix A). This pressure curve assumes that the pressure between the initiation of boiling (approximately 2 seconds) and the time that the cooler is empty (approximately 9 seconds) is at the saturation pressure that corresponds to the containment temperature. The actual cooler pressures will rise at a slower rate during this period than shown in Figure 4A due to actual heat transfer characteristics of the coolers during the LOOP conditions. The evaluation is conservative since heat capacitance of the water prior to boiling and fan coastdown time is not included. Following the time that the cooler is empty with no means of additional steam generation in the cooler, the pressure drops to accommodate the steam expansion. The steam expansion is treated isentropically, and the void pressure decreases as the volume increases. The pressure drop is also conservative, since steam condensation which is expected on pipe walls and at water/steam interfaces has not been taken into account. An investigation of the conservatism of this approach is included in Appendix G which determines the condensation in a draining header. 4

The water upstream and downstream of the coolers drains at a rate defined by the frictional losses, piping elevation changes, and cooler pressure. As the pressure rises during boiling, the cooler is voided and the water column travels further down the piping system. As the column advances, the length of the void increases. As the void exposes horizontal pipes, condensation induced waterhammers may occur. When the columns rejoin after pump restart, column closure waterhammer will occur.

4.4 Methodology

This analysis will evaluate the system for the occurrence of waterhammers and calculate the magnitude of credible waterhammer pressure pulses. The occurrence of a column closure waterhammer has been previously analyzed and qualified [2]. The previous load qualifications were based on upset condition allowable stresses. As the LOOP with LOCA condition follows the occurrence of a faulted plant condition, faulted condition allowable loads will be used as a basis for acceptability in this analysis.

4

The occurrence of other waterhammer types will also be evaluated. Condensation induced waterhammers are expected to be feasible in the system and their occurrence will be evaluated.

The details of the sequence of events and waterhammer calculations are described in the following sections:

5.1 Repressurization Curve Development
5.2 System Resistance Development
5.3 Volume and dh/dV Determinations
5.4 Condensation Induced Waterhammer Susceptibility
5.5 Condensation Induced Waterhammer Pressure Pulses
5.6 Column Closure Waterhammer Prediction
5.7 Flashing Flow Assessment

5.0 LOOP/LOCA ANALYSIS

5.1 Repressurization Curve Development

The ESW system pressure following the LOOP with LOCA event was calculated using a spreadsheet program. Copies of the spreadsheet are shown in Appendix A to this analysis. The development of the spreadsheet is described below:

- An isentropic expansion of the steam following draining of the cooler is assumed. An isentropic exponent of 1.13 is conservatively used. This results in pressures higher than a typical exponent of 1.3 for steam. It is also conservative since pressure reductions due to condensing of the steam in the downstream water is neglected.
- The system resistance is input from section 5.2 below.
- Volumes are input from section 5.3 below.
- The change in height as a function of a change in volume are from section 5.3 below.
- The containment temperatures are from Figure 1.
- The pressure in the cooler while it is draining is conservatively assumed to follow the saturation pressure corresponding to the containment temperature.
- Quattro Pro is used for the spreadsheet.
- Three cases are run with the spreadsheet to conservatively calculate condensation induced waterhammers and column closure waterhammers. Case 1 will predict maximum condensation induced waterhammer pressure pulses on the A train. Case 2 will predict maximum column closure waterhammer pressure pulse. Case 3 will predict the maximum condensation induced waterhammer pressure pulse on the B train.

5.2 System Resistance Development

As the coolers drain during the LOOP, the flow rate of the water out of the coolers will be a function of the system resistance between the coolers and the lake. The supply and discharge piping will drain. The flow paths are parallel and were combined into an equivalent parallel resistance. The draining water can take three paths out to the lake.

The path to the UHS via valves HV-37 and HV-38 is available throughout the transient. The path to the CW discharge tunnel via valves HV-39, 41, 40, & 42 is available throughout the transient but the valves are stroking closed and the resistance in this path is increasing during the transient. A third path is via the SW supply to ESW. While valves HV-23, 25, 24, and 26 go closed, failure of the SW pump discharge check valves is assumed.

The cooler pressure will be lower at the time the cooler empties if the drainage rate is fast versus slow. This is because the water temperature follows the increasing containment temperature. Once the cooler is empty, the pressure decreases as the steam bubble expands isentropically. The pressure when the void expansion starts will have a significant effect on the magnitude of condensation induced waterhammer pressure pulses. It is conservative to not include the water drainage paths to the SW system in the model for condensation induced waterhammer predictions. The condensation induced waterhammer prediction will be referred to as Case 1 for train A and Case 3 for train B.

The void size will be larger with decreased resistance from the SW cross connect being open. This may affect the magnitude of column closure waterhammers. It is therefore necessary to assess the effect of decreased resistance from the SW path and determine if the column travels significantly further with the reduced resistance. This model will be referred to as Case 2.

The system resistances for supply and discharge piping paths were calculated in Appendix B. The resistances are summarized as a simplified circuit diagram in Figure 5.

The resistance in the "B" train is different than the "A" train due to the different piping configurations. The "B" train system resistance will be calculated by comparing HV-49 flow rate with HV-50 flow rate. 4

The resistances are normalized to the equivalent lengths of 14" piping. The piping lengths and configurations in Appendix B are from isometric drawings listed under reference [8]. The friction factors and resistance coefficients are taken directly from reference [9] except for those components identified below:

4

'A' Train Return Piping
"F1" Butterfly Valve (HV-49) is throttled 21%:
14" valve
interpolating reference [10] between 20 & 30%
C_v=467 @ 21%
$K=891d^4/C_v^2=891(13.124)^4/(467)^2=121$

"F1" Flow Orifice (FO005)
bore size from reference [11]
d_1=6.9"
d=13.124"
$d_1/d=\beta=0.53$
then from reference [9] page A-20
C=.63 and $K=(1-\beta^2)/C^2\beta 4$
this K was then programmed in Appendix B

'A' Train Supply Piping
"COM5" CCW HX
from reference [3]:
ΔP=5 psi
Q=8800 gpm
then $C_v=Q/(\Delta P)^{1/2}=8800/(5)^{1/2}=3935$
then $K=891d^4/C_v^2=891(13.124)^4/(3935)^2=1.71$

Combined Return Piping
during normal operation lineup from reference [3]:
"R2" discharge to CW/SW system
ΔP=30 psi
Q=4376 gpm
then $C_v=Q/(\Delta P)^{1/2}=4376/(30)^{1/2}=799$
then $K=891d^4/C_v^2=891(13.124)^4/(799)^2=41$

"R3" discharge to UHS
ΔP=30 psi
Q=8500 gpm
then $C_v=Q/(\Delta P)^{1/2}=8500/(30)^{1/2}=1552$
then $K=891d^4/C_v^2=891(13.124)^4/(1552)^2=11$
these resistances for R2 and R3 are programmed in Appendix B for Case 2.

after discharge valves have re-aligned for LOCA from reference [3]:

"R2" discharge to CW/SW system
no flow to this path (valves shut)

"R3" discharge to UHS
ΔP=72.8 psi
Q=13576 gpm
then $C_v=Q/(\Delta P)^{1/2}=13576/(72.8)^{1/2}=1591$
then $K=891d^4/C_v^2=891(13.124)^4/(1591)^2=10.4$
This resistance is programmed in Appendix B for Case 1 & 3.

"B" Train Resistance Adjustment
The flow rate from the "B" train containment coolers is set at a higher rate than the "A" train which implies less system resistance in the "B" train than in the "A" train. Assuming the total pressure drop in each train is equivalent, the resistance in the return piping may be adjusted as follows:

Q_A=2470 gpm
Q_B=2730 gpm [5]
$K_B=K_A(Q_A/Q_B)^2$

This resistance is programmed in Appendix B for Case 2 & 3.

SW Supply Resistance Path
The drainage rate will be increased with water flowing to the normal SW supply. The resistance associated with this path is assumed to be the same as the resistance to the UHS. This assumption is considered appropriate given that the water must flow through more piping and valves and back flow through the SW pumps. This path will therefore have more resistance than the UHS path and use of the UHS resistance is considered conservative. This resistance is programmed in Appendix B for Case 2.

CASE 1 TOTAL RESISTANCE:
Case 1 is a model of the "A" train with the following characteristics:

- No reverse flow through the SW supply piping ($K_{s1}=\infty$).
- No flow to the CW/SW system return ($K_{r2}=\infty$).
- "A" train geometry/volumes are used for calculating the repressurization curve.

Case 1 allows prediction of maximum condensation induced waterhammer pressure pulses in the "A" train piping.

K_{CASE1}=28 FROM APPENDIX B

CASE 2 TOTAL RESISTANCE:

Case 2 is a model of the "B" train with the following characteristics:

- System resistance from "A" train is used with an adjustment for decreased B train resistance on the normal return side of coolers.
- Flow to the SW supply is allowed during the entire transient.
- Flow to the CW/SW return is allowed during the entire transient.
- "B" train geometry/volumes are used for calculating the repressurization curve.

Case 2 provides the least system resistance and allows the void to move the furthest possible distance. This allows the most conservative prediction of column closure waterhammers.

K_{CASE2}=22 FROM APPENDIX B

CASE 3 TOTAL RESISTANCE:

Case 3 is a model of the "B" train with the following characteristics:

- No reverse flow through the SW supply piping ($K_{s1}=\infty$).
- No flow to the CW/SW system return ($K_{r2}=\infty$).
- "B" train geometry/volumes are used for calculating the repressurization curve.

Case 3 allows prediction of maximum condensation induced waterhammer pressure pulses in the "B" train piping.

K_{CASE3}= 27 FROM APPENDIX B

5.3 Volume and dh/dV Determinations

The volume and change in height (h) per change in volume (v) are necessary to model the expansion and progression of the steam bubble.

COOLER

$A=\pi(.625-2(.035))^2/4(144)=1.68(10)^{-3}ft^2$
$L=110"(6pass)(32tubes)(12coils)(ft/12")=21120ft$
$V_1=21120(1.68)(10)^{-3}ft^3=35.48ft^3$

Cooler manifolds [12]
2 qty 3"OD 24" long pipes per coil
$V_2=2(12coils)(2ft)(.0513ft^2)=2.45ft^3$

2 qty 8" OD 11.5' long header per cooler
$V_3=2(.3474ft^2)(11.5ft)=7.99ft^3$

2 qty 6" OD 11.5' long header per cooler
$V_4=2(.2006ft^2)(11.5)=4.61ft^3$

~26' of 3" OD piping from headers to 3" coil pipes
$V_5=26(.0513)ft^3=1.33\ ft^3$

$V_{cooler}=35.48+2.45+7.99+4.61+1.33=51.86\ ft^3$
2 coolers therefore: $V_{2\ coolers}=103.7\ ft^3$
$dh/dV=(11.5ft)/2(51.86ft^3)=0.11\ ft/ft^3$ from 2080'6" to 2060' EL.

"A" TRAIN PIPING [8]

The supply and discharge piping configurations are nearly equivalent so just the discharge piping volumes will be calculated and doubled to account for the supply side volumes.

from EL. 2069' to 2064'9":
$V_8=8.5(.3474)=2.95ft^3$
$V_6=8.5(.2)=1.7ft^3$
$V= 2(2.95+1.7)=9.3\ ft^3$
$dh/dV=4.25/9.3=0.457ft/ft^3$

from EL. 2064'9" until leg drained:
$V_8=24.5(.3474)=8.5ft^3$
$V_6=15(.2)=3ft^3$
$V_{10}=9(.5475)=4.9ft^3$

$V=2(16.4)=32.8ft^3$
$dh/dV=0$

<u>from EL 2064'9" to 2058'9"</u>
$V_8=6(.3474)=2.1ft^3$
$V_{10}=6(.5475)=3.29ft^3$
$V=2(5.4)=10.8ft^3$
$dh/dV=6/10.8=.556ft/ft^3$

<u>from EL 2058'9" until leg drained</u>
$V_8=5.25(.3474)=1.8ft^3$
$V_{10}=27.75(.5475)=15.2ft^3$
$V_{14}=16(.9394)=15ft^3$
$V=2(32.1)=64.2ft^3$
$dh/dV=0$

<u>from EL 2058'9" to 2018'8"</u>
$V_{14}=2(40)(.9394)=75.2ft^3$
$dh/dV=40/75.2=.53\ ft/ft^3$

<u>from EL 2018'8" until leg drained</u>
$V=2(75.75)(.9374)=142.3ft^3$
$dh/dV=0$

"B" TRAIN PIPING [8]

The "B" train supply and discharge piping configurations are not as symmetric as in the "A" train so both supply and discharge piping volumes will be calculated. The B and D cooler piping configurations have differences which may make the water columns drain at different rates around EL 2027' 6" where the B cooler supply/discharge piping turns to a horizontal run while the D cooler discharge piping continues as a vertical run. The drainage rates are assumed to be similar up to this point. The calculations will show that there is not significant void expansion beyond this point so that this approach is appropriate.

<u>from EL. 2069' to 2063'6":</u>
$V_6=(10.75+9+3.5+9.5)ft(.2ft^2)=6.55ft^3$
$V_8=(10+9+16)ft(.3474ft^2)=12.16ft^3$
$V=18.71ft^3$
$dh/dV=5.5/18.71=.29\ ft/ft^3$

<u>from EL 2063'6" until drained:</u>
$V_8=(14.75+12+3)ft(.3474ft^3)=10.3ft^3$
$V_6=(18.75ft)(.2ft^2)=3.75ft^3$

V_{10}=(23.75+22+21.75+20)ft(.5475ft^2)=47.91ft^3
V=61.96ft^3
dh/dV=0

<u>from 2063'6" to 2027'6":</u>
dh=2063.5-2027.5=36ft
dV=4(36ft)(.5475ft^2)=78.84ft^3
dh/dV=36/78.84=.457ft/ft^3

<u>from 2027'6" until drained:</u>
V_b=.5475(62+64.5+5.75)=144.8ft^3
Note that real available volume is more at this elevation since D cooler lines are not accounted for here. The void progression will be assessed in section 5.6 to determine if the D cooler lines would be emptied.
dh/dV=0

5.4 Condensation Induced Waterhammer Susceptibility

The uncovering of horizontal runs of pipe during the draindown creates the potential for condensation induced waterhammer. As horizontal portions of the lines are exposed, steam will enter the space formed at the top of the pipe. The space between the top of the pipe and the exposed water can allow condensation of steam and trapping of steam bubbles. The rapid condensation of the trapped steam and the subsequent closing of the void by water causes a condensation induced waterhammer pressure pulse [14,15].

There is piping in both the "A" and "B" trains that is susceptible to condensation induced waterhammers. The magnitude of the waterhammer is proportional to the steam pressure at the time of the occurrence. Since the steam pressure is decreasing as the void expands, the first susceptible pipe will have the largest pressure pulse in each line.

The following criteria will be imposed to determine what piping is susceptible per reference [13]:

- Horizontal or near horizontal piping
- Subcooling greater than 36°F.
- L/D > 24.

The following assumptions are made to screen for susceptible piping:

- It is conservatively assumed that during draindown, horizontal pipes will drain from the top down as opposed to being "piston driven" from one end.
- Water temperatures correspond to the containment temperatures of Appendix A.
- The difference between the coldest water in the header and the hottest steam will be used to evaluate subcooling margin. This conservatively neglects mixing in the headers.
- Once the cooler is drained, the steam temperature remains constant. Since no credit is being taken for condensation during the pressure transient, this assumption is conservative. An investigation of condensation effects on pressure is included in Appendix G, but these results are conservatively not included in the screening. 4

Screen "B" Train for limiting pipe:

The B cooler discharge piping is the section of piping on the B train that is most susceptible to condensation induced waterhammer loads since it has the longest sections of horizontal piping near the coolers. Therefore only the B cooler will be assessed:

Checking L/D:

6" piping at elevation 2065' 6":

L=5.25' D=0.5ft L/D=10.5 < 24 therefore not susceptible

8" piping at elevation 2065'6":

L=4.5' D=0.665ft L/D=6.8 < 24 therefore not susceptible

8" and 10" piping at elevation 2063'6":

L=38.5' D=0.833ft L/D=46.2 > 24 therefore may be susceptible

10" piping at elevation 2027'6":

L=62' D=0.833ft L/D=74.4 > 24 therefore may be susceptible

Checking subcooling:

piping at elevation 2063'6":

Volume of water in the piping at this elevation is $V=61.961ft^3$
$V_{cooler}=103.7ft3$

$(V_{cooler} - V)=41.74ft^3 = V_{out}$

The water in the cooler when V_{out} is 41.74 ft^3 will be the coldest water in the header when the void reaches the header. When V_{out} from Appendix A case 3 equals 41.74 the time is 5 seconds and the water temperature is 227°F.

Subcooling: 243-227=16°F < 36°F therefore not susceptible

piping at elevation 2027'6":

The piping at elevation 2027'6" has a volume of 144.8 ft^3 which is greater than the cooler volume. A portion of this header, then, may be near the cooler outlet temperature prior to the transient of 100°F. This would allow sufficient subcooling margin for condensation induced waterhammer. Therefore, this piping is susceptible.

Screen "A" Train for Limiting Pipe

The discharge pipes from the A and C coolers have the longest lengths of horizontal piping near the coolers and are therefore most susceptible to condensation induced waterhammers.

Checking L/D:

A cooler 6" & 10" piping at EL 2064'9"
$L=L_6+L_8+L_{10}=15+1+8=24'$ D=.5' L/D=48>24 therefore may be susceptible

A & C piping at EL 2058'9"
$L=L_6+L_8+L_{10}+L14$
L=3+5.25+26+17=51.25' D=.665' L/D=77>24 therefore may be susceptible

Checking subcooling:

6" and 10" piping at elevation 2064'9" subcooling:

Volume of water in the piping at this elevation is $V=32.81ft^3$
$V_{cooler}=103.7ft3$
$(V_{cooler} - V)=70.9ft^3$

When Vout from Appendix A Case 1 equals $70.9ft^3$, the time is 7 seconds. The water that exited the cooler at 7 seconds is the water that is at the downstream end of the header when the steam starts to create a void in the header. The water coming out of the cooler at 7 seconds is 234°F.

Subcooling: 243-234=9°F < 36°F therefore not susceptible

A & C piping at EL 2058'9"subcooling:

Volume of water in the piping at this elevation is V=64.2ft3
$V_{cooler}=103.7ft3$
$(V_{cooler} - V)=39.5ft^3$

When Vout from Appendix A Case 1 equals $39.5ft^3$, the time is 5 seconds. The water that exited the cooler at 5 seconds is the water that is at the downstream end of the header when the steam starts to create a void in the header. The water coming out of the cooler at 5 seconds is 227°F.

Subcooling: 243-227=16°F < 36°F therefore not susceptible

A & C piping at EL 2018'8":

The piping at elevation 2018'6" has a volume of 142.3 ft^3 which is greater than the cooler tubing volume. A portion of this header, then may be near the cooler outlet temperature prior to the transient of 100°F. This would allow sufficient subcooling margin for condensation induced waterhammer. Therefore, this piping is susceptible.

5.5 Condensation Induced Waterhammer Pressure Pulses

Condensation induced waterhammer is evaluated by calculating the system pressure that will exist when each horizontal line is exposed. This system pressure is then used to calculate the pressure pulse that would result from the waterhammer. The equation to be used which is derived from the Joukowski equation and an energy balance [14] is:

$$\Delta P = 0.707C\sqrt{(P_o - P_v)\ \rho_l \frac{\alpha}{1-\alpha}}$$

where C=sonic velocity
P_o=system pressure (steam pressure)
ρ_l=water density
α=void fraction
P_v=void pressure (water saturation pressure)

Appendix G develops the peak pressure pulses for a CIWH event as 178.3 psig.

This pressure pulse is conservative considering that 2300 ft/sec is used for the sonic velocity. Typical SW systems have entrained air which typically produces a sonic velocity less than 2300 ft/sec. Reference [13] states that at tests conducted with untreated water at MIT analysts typically observed sonic velocities of about 2000 ft/sec. The sonic velocity decreases significantly if free air is present in the water. Dissolved air in open loop service water systems are up to approximately 26 ppm (References [33, and 34]). Some of these dissolved gasses and microscopic bubbles in open water systems cause the sonic velocity to be less than in pure water. As the temperature is increased following a LOCA, some of the dissolved air will be released which significantly lowers the sonic velocity in this heated water. The effect of temperature increase is shown in Figure 6. This figure was developed from the spreadsheet shown in Appendix C. With water temperatures greater than 200°F in the horizontal pipes where the condensation induced water hammer will occur, the sonic velocity predicted would be less than 1000 ft/sec. 4

Since this is a local sonic velocity, it is recommended that the subcooled water sonic velocity (Appendix C) be used to propagate the pressure pulses through the ESW piping system.

During refilling, bubble collapse type waterhammers similar to those that occur in the horizontal lines during draining will not occur because the refill velocity exceeds the velocity required to keep the pipe full. A velocity of approximately 5 ft/sec is needed to keep a 10" pipe full [18]. The refilling velocity exceeds this and will preclude the occurrence of condensation induced waterhammer in the horizontal lines during refill. 4

5.6 Column Closure Waterhammer Prediction

Pressure pulses can be caused in systems where voids form due to elevation differences between the equipment or piping and their suction or discharge reservoir. This is the case with the fan coolers where a void will form in the discharge piping any time that the service water pumps are shut down. The velocity of the closing water will determine the magnitude of the pressure pulse.

When the ESW pump starts, the water advances towards the cooler from the normal supply side and at a lesser rate from the normal discharge side. The advancing water columns will eventually meet in the discharge piping and a column closure waterhammer will occur. The impact velocity of the LOOP with LOCA waterhammer will be less than the LOOP without LOCA waterhammer. The reasons for this are defined below:

(1) The frictional resistance in the two cases are the same. The total system resistance associated with a LOOP with LOCA is greater than a LOOP without LOCA because the void is initially at a pressure greater than 0 psia (LOOP without LOCA void is at 0 psia). Since the system resistance is greater with a LOCA, the closure velocity in the LOCA case is less than or equal to the closure velocity in the no LOCA case.

(2) Since the system resistance in the "B" train is less than the "A" train, a large void is possible on the "B" train. The ratio of impact velocity to closure velocity is dependent upon the void size. The larger the void size the greater the potential for increased impact velocity. The "B" train was selected to evaluate the impact velocity to closure velocity. Reference [17] provides a relationship of impact velocity to closure velocity as a function of void size and piping lengths. The length of piping from the pumps to the coolers is approximately 430 ft on the B train to the D cooler. The void progresses into the long horizontal runs below the B and D coolers per Appendix A Case 2.

The total void volume is 338.5 ft^3 from Appendix A Case 2 upon pump restart. The volume accounted for at elevation 2027'6" was just the piping serving the B cooler (145ft^3) for the spreadsheet model. 76 ft^3 of the void is below 2027'6". Approximately half this volume is in the B cooler piping and half in the D cooler piping and the void progresses the following distance past 2027'6" in each line:

$l=.25(76ft^3)/(.5475ft^3/ft)=35$ ft

Modeling the system with just the B piping volume at elevation 2027'6" in Appendix A Case 2 & 3 is acceptable since the void will not progress into the 14" piping downstream of the D cooler by inspection of the piping lengths available. The void length on each side of the cooler is calculated as 35 feet plus the distance to the cooler from 2027'6" (66 feet). For the D cooler:

Void size on each side of the cooler = 35 + 66 = 101 ft.
L=430 + 101 ft = 531 ft.
X_o=430 - 101 = 329 ft.
X_o/L=329/531 = 0.62 for LOOP with LOCA

For a LOOP without LOCA the void progresses less and the ratio X_o/L will be slightly larger. A figure showing the relationship between the impact velocity and X_o/L for different FL/2D ratios [17] is shown in Figure 7. For a large FL/2D ratio, the difference in impact velocity V_i for small differences in X_o/L is small. The ratio of impact velocity to closure velocity approaches unity for all fL/2D ratios greater than 20.

Following a LOOP without a LOCA the supply side column will close at a rate of 10.32 Ft/sec. in a 10" Sch40 pipe per Reference 21. The system resistance corresponding to this closure is found from pump runout conditions. With pump runout at 24000 GPM the system resistance is 250 ft. from the pump curve [22]. The void pressure at pump restart is 0 PSIA and 5.9 PSIA for LOOP without and with LOCA respectively.

The LOOP with LOCA void size is larger than LOOP without LOCA since the void is pressurized in the LOCA case. LOOP without LOCA will reach the horizontal header at elevation 2027'-6" The frictional resistance during closure is defined by:

$h_f = P_1 - P_o - \Delta h$

Where
P_1 = Pump dynamic head
P_o = Void pressure
Δh = Elevation change from reservoir to closure point

Then
Δh = 2027'6" - 1988' = 39.5'
$P_{o\text{-}LOOP}$ = 0 PSIA = 0 Ft H_2O
P_1 = 250 Ft H_2O
$h_{f\text{-}LOOP}$ = 250 - 0 - 39.5 = 210.5 Ft H_2O

From [21] $V_{O\text{-}LOOP}$ = 10.32 Ft/Sec for 10" SCH 40 pipe then:

$$h_{f\text{-}LOOP} = \frac{fL}{2D}\frac{V_{O\text{-}LOOP}}{g}$$

$$\frac{fL}{2D} = \frac{176.5(32.2)}{(10.32)^2} = 53 >> 20$$

Therefore V_i/V_o will approach unity for LOOP with and without LOCA.

The impact velocity for the LOCA case will be less than or equal to $V_{O\text{-}LOOP}$ since the void is pressurized in the LOCA case.

In the LOOP with LOCA case, the sonic velocity at closure will be lower because the water is heated in the cooler releasing free air in the water prior to closure. The magnitude of the column closure pressure pulse will be lower for the LOOP with a LOCA and the limiting column closure waterhammer is the LOOP without LOCA.

The "A" train column closure waterhammer pressure pulse is calculated as 225 psig as shown in Appendix E. This value will be used for the Train "A" CCWH peak pressure pulses.

The "B" train column closure waterhammer pressure pulse is calculated as 193 psig as shown in Appendix E. Appendix E also shows an experimental measurement of 205 psig for a LOOP only test result. This slightly higher value will conservatively be used for Train "B" CCWH peak pressure pulses.

4

The development of the pressure pulse time for a CCWH transient is based on observation of measured data from LOOP testing at Wolf Creek. Attachment E contains measured pressure-time profiles of CCWH events that occurred on 11/12/91 and 11/14/91 during the actuation sections of Wolf Creek procedure STS KJ-001B. These represent the column closure waterhammer event that can occur with a LOOP but <u>without</u> a LOCA or MSLB. Inspection of these data (e.g., see sheet E44 in Ref. C-1) shows that a realistic rise time for a CCWH event in this system is 100 ms and total peak duration is 200 ms.

5.7 Flashing Flow Assessment

Design flows are required to be established upon starting of the ESW pumps to ensure design heat removal. If flashing occurs in the ESW system, flow may be reduced. Two phase flow increases frictional losses and creates the potential for choked flow conditions. Wolf Creek was evaluated for flow limitation at (1) restrictions upstream of coolers, (2) the coolers themselves, (3) restrictions downstream of the coolers, and (4) restrictions in the 30" header. For all cases evaluated, no flow limiting condition was found. Each of these are evaluated below:

(1) Upstream of the coolers the water is not significantly heated since the cooler voids quickly and the water is not heated. There are also no significant flow restrictions upstream of the coolers. The water will not flash upstream of the coolers after starting of the ESW pumps based on the following:

Determination of water temperature in horizontal headers:

The water in the horizontal piping susceptible to condensation induced waterhammer is assumed to be well mixed. This is appropriate since the horizontal pipes will drain from the top down and the agitation from the condensation induced waterhammers encourages mixing.

To determine the header mixed temperature:

1) The initial 50% of the cooler volume which empties is assumed to be at the average water temperature from the beginning of the transient to the time when half the cooler is drained:

$$T_{half1} = 0.5\ (T_{time\ =\ 0} + T_{time\ 1/2\ drained})$$

This assumption simplifies the analysis. Since the flow rate does not change significantly during draining of the cooler and the pressurization is modeled as nearly linear, this assumption is appropriate.

2) The last 50% of the cooler volume which empties is assumed to be at the average water temperature from the time when half the cooler is drained to the time when the entire cooler is drained:

$$T_{half2} = 0.5\ (T_{time\ 1/2\ drained} + T_{time\ empty})$$

3) The volume of water in the header not displaced by hot water, is at a temperature of 100°F (normal cooler outlet temperature).

"A" Train	"B" Train
@ EL. 2018'8"	@ EL. 2027'6"
$V_{hdr} = 142.3\ ft^3$	$V_{hdr} = 144.8\ ft^3$
$T_{time=0} = 100°F$	$T_{time=0} = 100°F$
$V_{time\ 1/2\ drained} = 51.85\ ft^3$	$V_{time\ 1/2\ drained} = 51.85\ ft^3$
$T_{time\ 1/2\ drained} = 230.6°F$	$T_{time\ 1/2\ drained} = 230.6°F$
$T_{half1} = .5(100+230.6) = 165.3°F$	$T_{half1} = .5(100 + 230.6) = 165.3°F$
$V_{time\ empty} = 103.7\ ft^3$	$V_{time\ empty} = 103.7\ ft^3$
$T_{time\ empty} = 243°F$	$T_{time\ empty} = 243°F$
$T_{half2} = .5(230.6 + 243) = 236.8°F$	$T_{half2}\ .5(230.6 + 243) = 236.8°F$
$V_{hx} = 35.48\ ft^3$	$V_{hx} = 35.48\ ft^3$
$x_{half1} = x_{half2}$	$x_{half1} = x_{half2}$
$= 35.48/142.3/4 = .062$	$= 35.48/144.8/4 = .061$
(divided by four since half the cooler goes to supply side and half to discharge side)	
$x_{hdr} = (142.3-.5(35.48))/142.3$	$x_{hdr} = (144.8-.5(35.48))/144.8$
$x_{hdr} = 0.875$	$x_{hdr} = 0.877$
$T_{mix} = x_{half1}T_{half1} + x_{half2}T_{half2} + x_{hdr}T_{hdr}$	$T_{mix} = x_{half1}T_{half1} + x_{half2}T_{half2} + x_{hdr}T_{hdr}$
$T_{mix} = .062(165.3 + 236.8) + .875(100)$	$T_{mix} = .061(165.3 + 236.8) + .877(100)$
$T_{mix} = 112°F$	$T_{mix} = 112°F$

For conservatism add 10°F

$T_{mix} = 122°F$ for each train

The lowest system pressure upon pump restart is 5.7 psia from Train B Case 2.

The saturation temperature at 5.7 psia is 168°F. The saturation pressure at $T_{mix} = 122°F$ is 1.8 psia. There is no pressure drop of significance between the column and the heater to cause the pressure to fall to 1.8 psia and so flashing will not occur in the piping upstream of the cooler.

(2) The leading edge of the water entering the tubes from the supply side following pump restart will flash to steam since the tubes will be empty and the tubes will be at the containment temperature. The two phase flow downstream of the advancing water will cause increased resistance in the cooler. The water pressure will increase to accommodate the increased resistance and continually displace steam in the cooler as the tubes are filled. If a choked steam flow condition exists in the tubes, the water pressure will increase and compress the steam void. The water will progress through the tubes as steaming occurs at the leading edge of the water. The progression of water through the tubes will not be significantly affected by choked steam flow in the tubes based on the following:

Reference [21] indicates that the advancing water column closes at a velocity of 10.32 feet/sec. This water will flash when it enters the hot tubes. Assuming this water immediately flashes to steam at the void pressure then the resultant volumetric flow rate would be:

$m = 10.32 ft/sec(60 lb/ft^3)(.5475 ft^2) = 339 lb/sec$
$V_{stm} = 339 lb/sec(65 ft^3/lb) = 22035\ ft^3/sec$
since an area of only $0.65 ft^2$ (384 qty 5/8" .035" wall tubes) is available for flow and the sonic velocity for steam at these conditions is approximately 1400 ft/sec [23], the flow would choke. The system resistance would increase and cause the system pressure to increase. The increase in system pressure would cause the steam specific volume to decrease and allow more water to progress into the cooler and fill the cooler. This process would happen in a fraction of second more than the amount of time it would take the cooler to fill without choking:

$V_{hx} = 35.5\ ft^3$
at $339\ lb/sec(ft^3/60 lb) = 6\ ft^3/sec = 2536 gpm$
time = 35.5/6.0 = 5.9 seconds without steam flashing

with flow choked at 1400 ft/sec
$V_{stm} = 1400\ ft/sec(.65 ft^2)(lb/65\ ft^3) = 14\ lb/sec$
$Q = 14\ lb/sec(7.48)(60)(ft^3/60 lb) = 104.5\ gpm$
Since the system pressure will increase and reduce the steam specific volume, filling of the cooler will occur. The maximum rate at which the filling would be reduced corresponds to the choking flow rate:
$Q_{new} = 2536 gpm - 104.5 gpm = 2432 gpm = 5.42\ ft^3/sec$
time = 35.5/5.42 = 6.6 seconds with steam flashing

The 7/10's of a second difference is insignificant and flow limitation is therefore not a concern.

(3) The significant resistance in the piping downstream of the coolers prior to the 30" header is the 14" orifices. System and local pressures in the piping downstream of the coolers stays above its saturation point upon restart of the pumps and two phase flow conditions are avoided in the piping upstream of the 30" header based on the following:

Flow orifice throat = d_1 = 6.9" [11]
Pipe I.D. = d_2 = 13.124"
Pipe velocity = V_2 = 2(10.32) = 20.46 ft/sec [21]

$$Therefore\ V_1 = 20.46\ \frac{(13.124)^2}{(6.9)^2} = 74.02\ ft/\text{sec}$$

$$\frac{V_1^2}{2g} = 86.4\ ft\ H_2O$$

$$\frac{V_2^2}{2g} = 1.65\ ft\ H_2O$$

Pressure drop due to velocity change:

ΔP_V = 86.4 - 1.65 = 85 ft H_2O = 36.7 psi

Pressure in 30" header downstream is P_{HDR} = 72.8 PSIG [3]
30" HDR EL. = 1979'6" [8]
ORIFICE EL. = 2001'6" [8]

Conservatively neglecting frictional losses, the orifice discharge pressure is:

$$P_{OR} = 72.8 - \frac{(2001.5 - 1979.5)}{2.31} = 62\ PSIG = 77\ PSIA$$

The pressure at the throat is then $P_{TH} = P_{OR} - \Delta P_V$ = 77 - 36.7 = 40.3 PSIA.

Conservatively neglecting any mixing, the hottest water is 243°F with a saturation pressure of P_{SAT} = 27 PSIA.

$P_{SAT} < P_{TH}$ therefore the flow will not flash.

There are no other flow restrictions as significant as the orifice and two phase flow conditions will not occur downstream of the coolers.

(4) The significant resistance in the 30" return header is the UHS restricting orifices. System and local pressures stay above the saturation pressure and two phase flow is avoided in the 30" header based on the following:

Flow orifice throat = d_1 = 11.375" [27]
Pipe ID = 29.25"
Pipe flow rate = 13576 GPM = 30.25 Ft^3/Sec [3]
Pipe flow area = 4.67 ft^2 [9]
Pipe velocity = V_2 = 30.25/4.67 = 6.48 ft/sec

$$V_1 = 6.48 \frac{(29.25)^2}{(11.375)^2} = 42.8\ ft/\text{sec}$$

$$\frac{V_1^2}{2g} = 28.5\ ft\ H_2O$$

$$\frac{V_2^2}{2g} = 0.7\ ft\ H_2O$$

Pressure drop due to velocity change:

ΔP_V = 28.5 - 0.7 = 27.8 ft H_2O = 12 psi

Pressure in 30" HDR downstream is P_{HDR} = 15.2 PSIG = 29.9 PSIA.

The pressure at the orifice throat is then $P_{TH} = P_{HDR} - \Delta P_V$ = 29.9 - 12 = 17.9 PSIA.

The maximum LOCA temp in the 30" HDR is 170°F per [3]. This temperature is conservatively increased to account for the hot containment cooler discharge. Using a maximum temperature of 243°F and a flow rate of 2000 GPM, the header temperature is then:

$$T_{HDR} = \frac{2000(243) + 11576(170)}{13576}$$

$$T_{HDR} = 181^{\circ}F \textit{ with a saturation pressure, } P_{SAT} = 7.7 \textit{ PSIA}$$

$P_{SAT} << P_{TH}$ therefore the flow will not flash.

There are no other flow restrictions as significant as the orifice and two phase flow conditions will not occur in the 30" return header.

Since flashing flow-conditions will not occur and limit flow, only void closure is required to establish design flow rates. The time required to close the void is calculated as follows:

Cooler Volume = V_{HX} = 103.7 ft^3
2027'6" Header Void Volume = V_{HDR} = 380-265 = 115 ft^3
(For train "B" case 2 which has largest void)

Piping Volume between Coolers and Header
V_{other} = 18.71 + 61.96 + 78.84 = 159.5 ft^3
(From Section 5.3)

Void Volume = $V_{VOID} = V_{HX} + V_{HDR} + V_{OTHER}$ = 378.2 ft^3

From Reference [21] the forward and reverse direction closure velocities for Wolf Creek are:

V_{FOR} = 10.32 ft/sec for 10" SCH 40 pipe
V_{REV} = 1.9 ft/sec for 10" SCH 40 pipe

The flow area for 10" SCH 40 piping is 0.5475 ft^2 per [9].

These velocities are for each cooler, the total flows for the train are then:

Q_{FOR} = 2(10.32)(.5475) = 11.3 ft^3/sec.

Q_{REV} = 2(1.9)(.5475) = 2.1 ft^3/sec.

The time to fill the coolers is then:

$t_{fill} = t_{restart} + (1/Q_{FOR})(1/2V_{HDR} + 1/2\ V_{OTHER} + V_{HX})$
Where $t_{restart}$ = 37 seconds when the pumps restart.

$t_{fill} = 37 + (1/11.3)(1/2(115) + 1/2(159.5) + 103.7)$

$t_{fill} = 58.3$ sec

The time to close the void completely is:

$$t_{CLOSE} = t_{RESTART} + \frac{V_{VOID}}{Q_{FOR} + Q_{REV}} = 37 + \frac{378.3}{11.3 + 2.1} = 65.2 \ sec$$

Once the coolers are filled (prior to the closing of the void in the discharge piping), the heat removal rate will be initially higher than normal. This is due to higher service water flow velocity that will exist until the full void is closed on the discharge side and the initially higher tubing temperatures. The water is flowing at a rate greater than normal because there is less system resistance while the void is closing. The flow velocity through the tubes is 8.8 ft/sec prior to final void closure (11.3 ft^3/sec through two coolers, 5.65 ft^3/sec through one cooler with a flow area of 0.645 ft^2) versus a normal flow velocity of 3.5 ft/sec (1000 gpm, or 2.3 ft^3/sec per cooler). The increased flow rate results in a higher tubeside velocity and greater heat removal capability. The tubing temperatures are greater than normal because the coolers have been exposed to a hot containment atmosphere without service water flowing to remove heat. The heat transfer will exceed the normal heat transfer until the void is closed. When the void is closed (at 65.2 seconds), the heat transfer will become the normal heat transfer since the velocity will go down to the normal system flow and the tubes will have reached a steady state temperature.

The basic heat transfer equation demonstrates the improved heat removal capability further:

$Q = m*Cp*dT$

where m = mass flow rate
Cp = specific heat of water
dT = water temperature change

When the cooler is first filled, the mass flow rate and temperature rise is greater than design basis conditions. Changes in the specific heat of water are insignificant for the temperature ranges of concern. As a result, the heat transfer rate Q (in BTU/hr) will be greater prior to final column closure than for design basis conditions.

Although final column closure will occurs at 65.2 seconds, the CFCs are capable of providing design basis heat removal prior to 60 seconds.

6.0 LOOP TEST EVALUATION

The 1991 tests of the SW system were conducted from 11/12/91 to 11/14/91. These tests included multiple system line-ups to simulate several operating conditions. The individual tests are identified by the step number of the test procedures [STS KJ-001B] utilized to obtain the data. A copy of the memo describing the test and the test results is included in Appendix E.

The primary difference between the portions of the test pertains to the cross tie from the non-safety and essential service water (ESW) pumps. During a LOOP, the ESW pumps lose power and the system depressurizes, causing the fan coolers to void which, in turn, causes column closure waterhammer. If the non-safety service water pumps are cross-tied to the ESW pump discharge and remain on, the system does not depressurize when the ESW pumps are shut off, thereby preventing voids in the fan coolers.

The data obtained during test step 5.2.19 provides a simulation of the LOOP with an SI Signal generated during a LOCA. This test most closely represents the system configuration for which this analysis is performed.

This representative test provides a peak pressure pulse of approximately 205 psig for column reclosure waterhammer. This is in excellent agreement with predicted column closure waterhammer pulses of 193 psig and 225 psig for the "B" and "A" trains respectively.

7.0 FLUID STRUCTURE INTERACTION

Fluid/Structure interactions have been demonstrated to increase piping/support loads in some test environments [30]. These effects are predominant in thinner walled pipes and is not expected to be a concern considering the assessment shown in Appendix F.

8.0 LOOP/LOCA ANALYSIS CONCLUSIONS & RECOMMENDATIONS

As described in this report, two kinds of waterhammer are anticipated. One is the column closure waterhammer that will not be more severe than the LOOP without LOCA waterhammer. The other is the trapping and condensing of steam during the draining phase.

Analyses demonstrating the structural acceptability of the ESW system to these dynamic loads are contained in a separate analysis reported in the latest revision of Altran Technical Report 96227-TR-03 [29].

9.0 REFERENCES

[1] FSAR-Wolf Creek

[2] Altran Corporation Report No. 94100-C-02, "Structural Dynamic Analysis of ESW System Waterhammer", Rev. 1.

[3] WOLF CREEK SYSTEM FLOW DIAGRAM ESSENTIAL SERVICE WATER, M-11EF01, Rev. 6.

[4] IST Valve data sheets - included in Appendix D

[5] Telecon Matt W. Zweigle with Bill Selbe, 11/21/96, included in Appendix D,

[6] Cooling Coil Data Sheet - included in Appendix D

[7] WCNOC calculation, "Engineered Safeguards Parameters For MAAP Input File", SA-90-018, Rev. 0.

[8] Wolf Creek Piping Isometric Drawings

M-13GN01 Rev. 3
M-13GN02 Rev. 3
M-13EF01 Rev. 6
M-13EF02 Rev. 8
M-13EF03 Rev. 13
M-13EF04 Rev. 8
M-13EF05 Rev. 6
M-13EF06 Rev. 10
M-13EF07 Rev. 1
M-13EF08 Rev. 0
M-13EF09 Rev. 0

[9] Crane Technical Paper 410, 25th printing, 1991.

[10] Jamesbury VLV DWG, NC-532829-520, Rev. 1W, (HV-45-146).

[11] WCNOC calc EF-M-018 Rev. 00, "Orifice Plates EF-FO-0005 and EF-FO-0006 Evaluation".

[12] AAF, HX Header and Manifold Dwgs

107D-1012111-C Sht 1 & 2 Rev. 1B
107R-1012103-D Rev. 2W.

[13] Griffith, P., "Screening Reactor Steam/Water Piping Systems for Water Hammer", Unpublished NUREG, August, 1996 Draft.

[14] Akselrod, A., Esselman, T., Griffith, P., and Min, E. "Condensation Induced Waterhammer in Steam Distribution Systems", ASME Winter Annual Meeting, 1991, PVP-Vol. 224, FED-Vol. 126.

[15] Griffith, P. and Silva, R., "Steam Bubble Collapse Induced Water Hammer in Draining Pipes", PVP-Vol. 231, ASME 1992, pp. 115-119.

[16] "Diagnosis of Condensation-Induced Waterhammer, Volume 1, Methods and Background", NUREG-CR-5220, 1988.

[17] EPRI NP-6766, "Waterhammer Prevention, Mitigation, and Accommodation, Volume 5, Part 1, Waterhammer Assessment Guidelines", July, 1992.

[18] Griffith, P., Chou, Y., "Admitting Cold Water into Steam Filled Pipes Without Water Hammer Due to Steam Bubble Collapse", PVP-Vol. 156, ASME 1989, pp. 63-71.

[19] WCNOC Calculation EF-S-011 Rev.0, "Qualify the Existing ESW Piping and Its Supports for Waterhammer Loads".

[20] WCNOC Calculation EF-S-010, Rev. 0, "Determine the Static Loads Generated in the ESW System Due to Waterhammer".

[21] Callaway Waterhammer Load Calculation, 0096-020-Calc-01., Rev. 0, 6/29/92.

[22] Byron Jackson Pump Curve for WCNOC ESW Pumps, included in Appendix D.

[23] ASME Steam Tables, 5th Edition.

[24] ADLPIPE, Static & Dynamic Pipe Stress Analysis, Version 4F7B, Research Engineers, Yorba Linda CA.

[25] ASME, Section III, Subsection NC Div. 1, 1974 with Addendum through 1976.

[26] ASME, Section III, Subsection NF 1974 Addendum through 1976.

[27] Wolf Creek Calculation, EF-M-031, UHS Orifice Sizing, Rev. 0, 3/26/96.

[28] Altran Calculation No. 96227-C-01, "Structural Qualification of CFC Discharge Line to a simultaneous LOCA and LOOP Event". Rev. 0

[29] Altran Technical Report No. 96227-TR-03, "Structural Dynamic Analysis of Containment Cooling System Reactor Building Train "A" and Train "B" Supply and Return Piping, Rev. 0.

[30] Wiggert, Otwell, and Hatfield, "The Effect of Elbow Restraint on Pressure Transients," Transactions of the ASME, Volume 107, September 1985.

[31] Wylie, E. B. and Streeter, V. L., Fluid Transients in Systems, Prentice Hall, 1993.

[32] W. Zielke, H-D Perko, and A. Keller, "Gas Flow in Transient Pipe Flow", Pressure Surges-Proceedings of the 6th International Conference pp. 3-14, 1990.

[33] Chemical Engineer's Handbook, John Perr Editor, 3rd Edition, 1950.

[34] Properties of Ordinary Water-Substance, American Chemical Society, Reinhold Publishing Corporation, 1940.

4

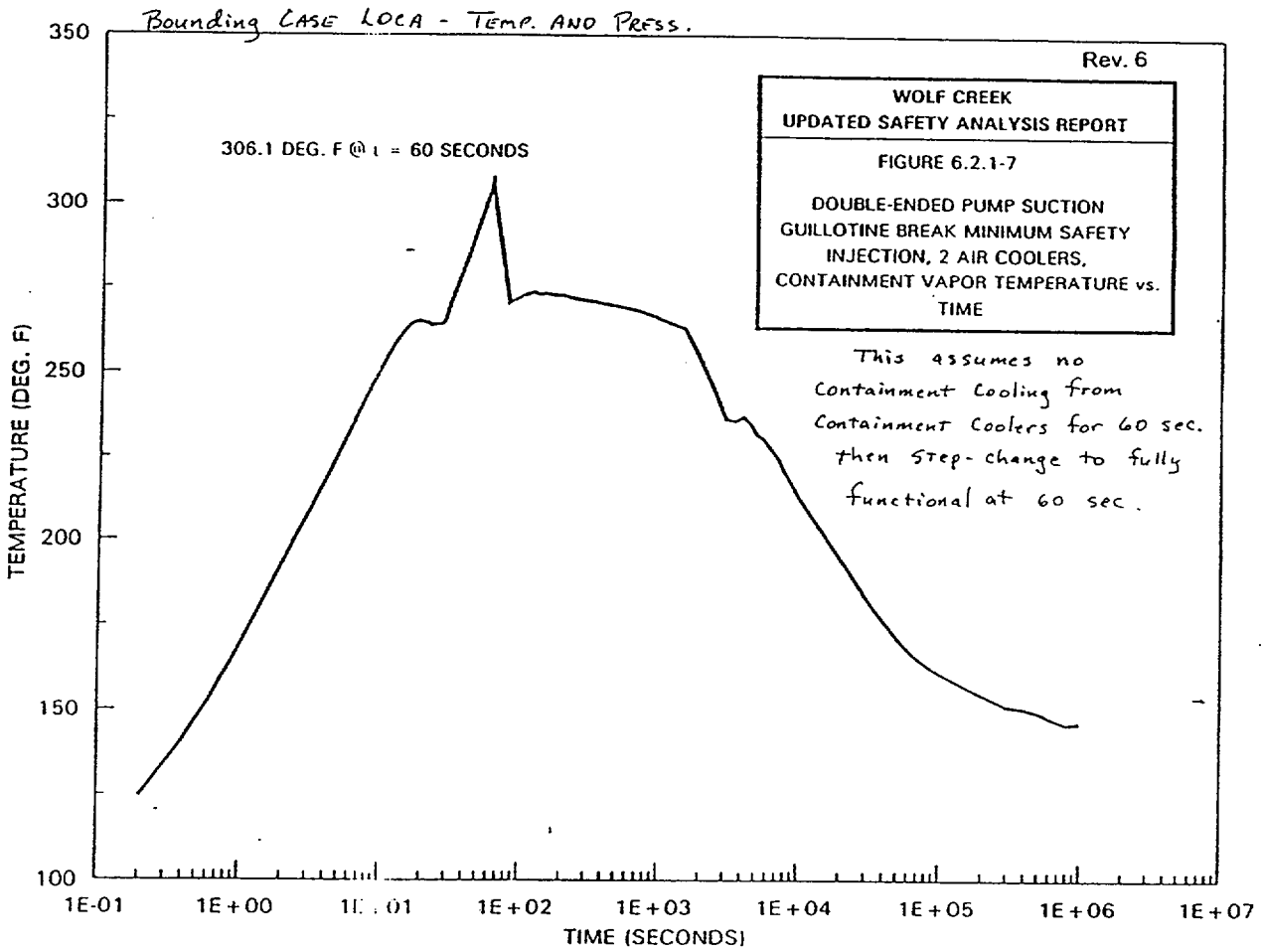

Figure 1 - Containment Temperature Profile

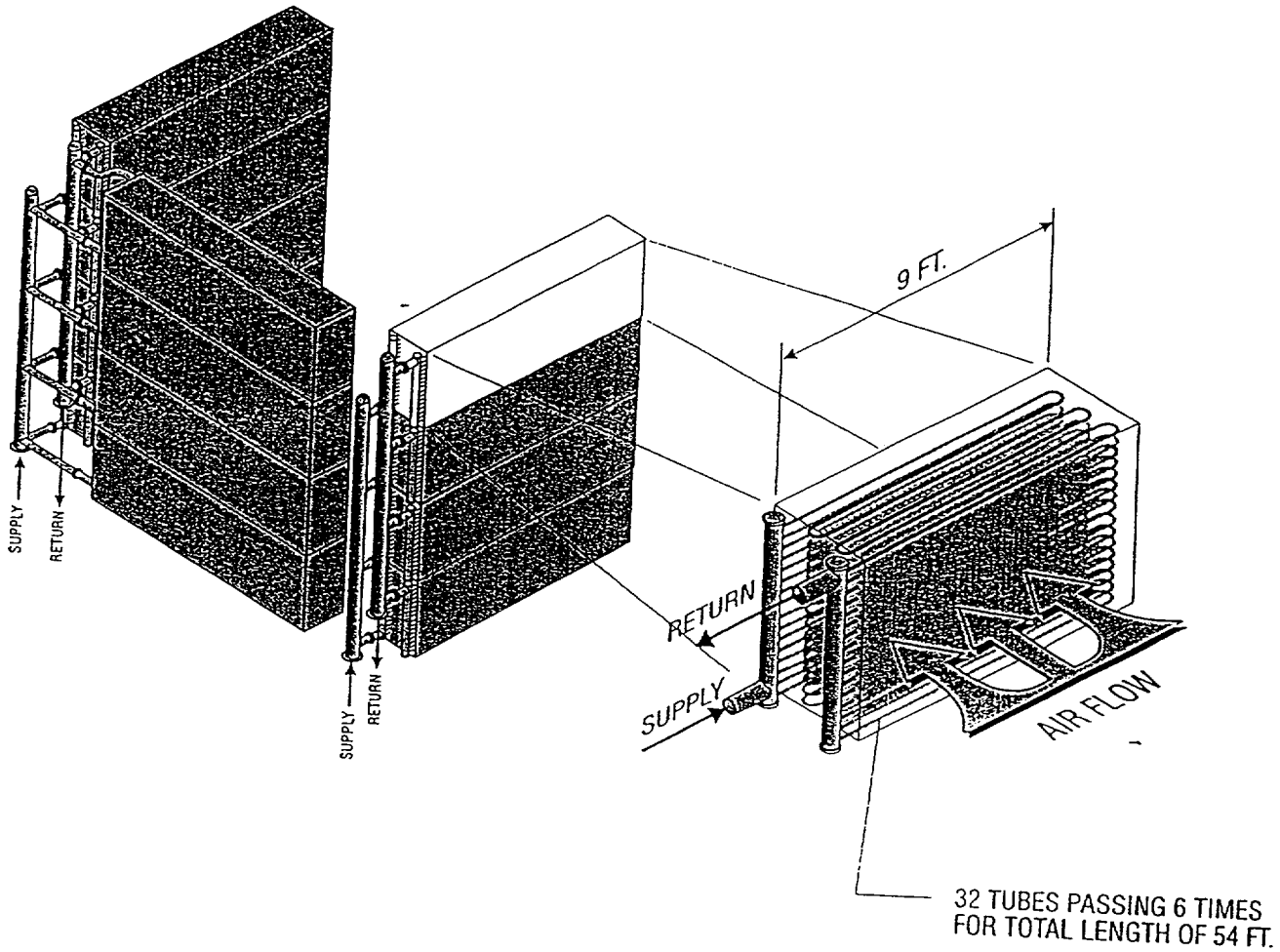

Figure 2 - Containment Cooler Configuration

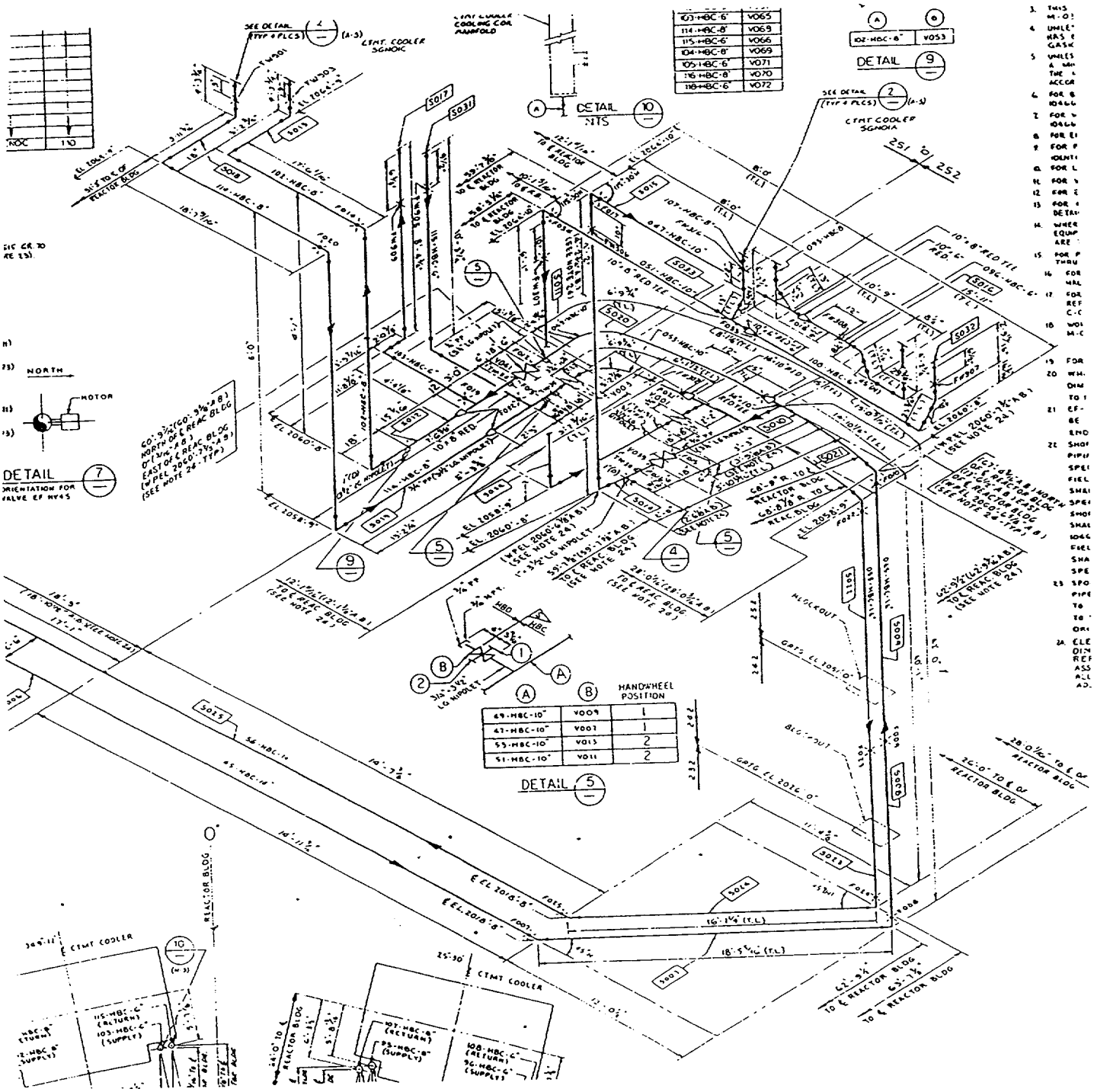

Figure 3A - A Train, A & C Cooler, Piping Configuration Inside Containment

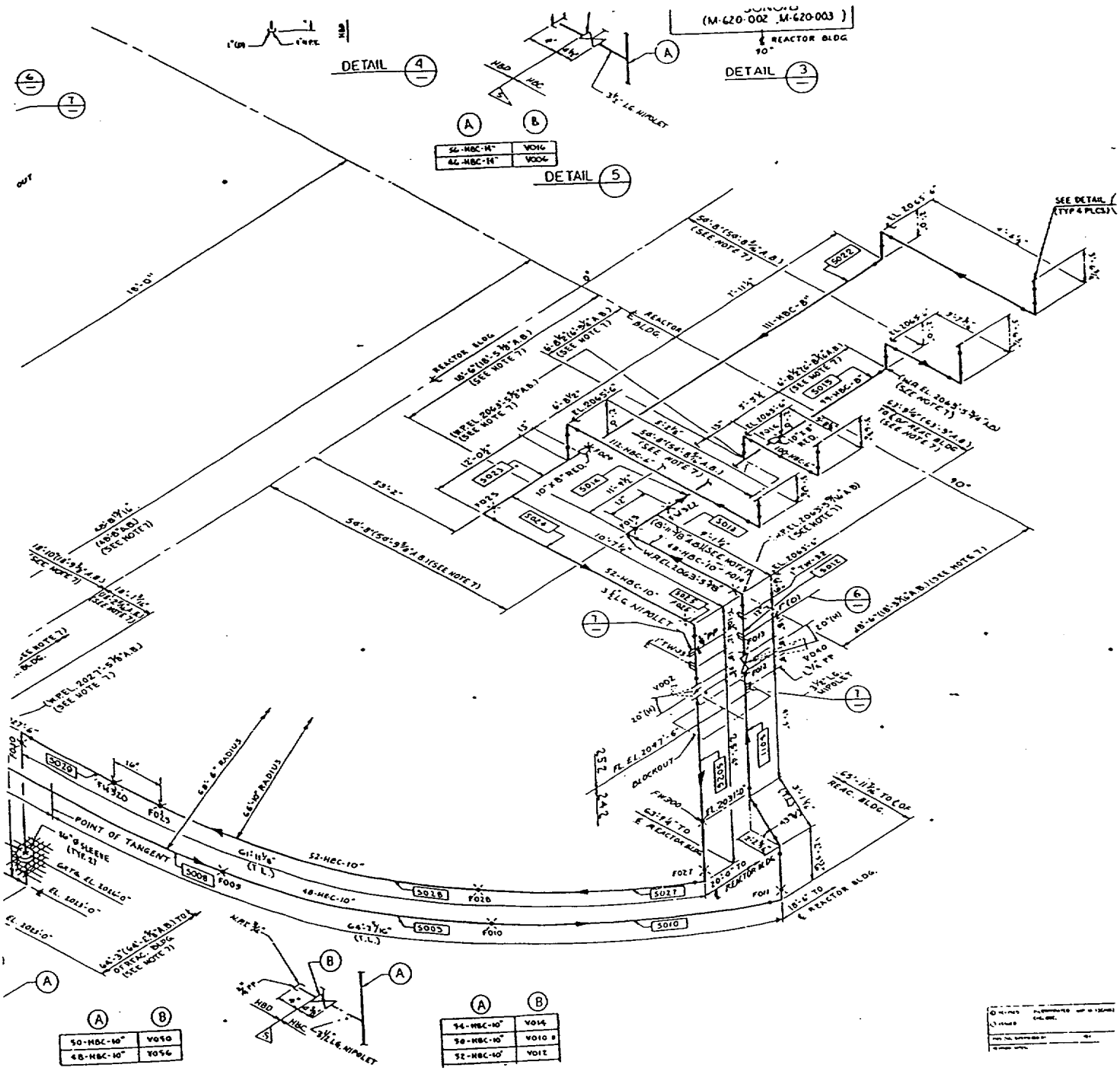

Figure 3B - B Train, B Cooler, Piping Configuration Inside Containment

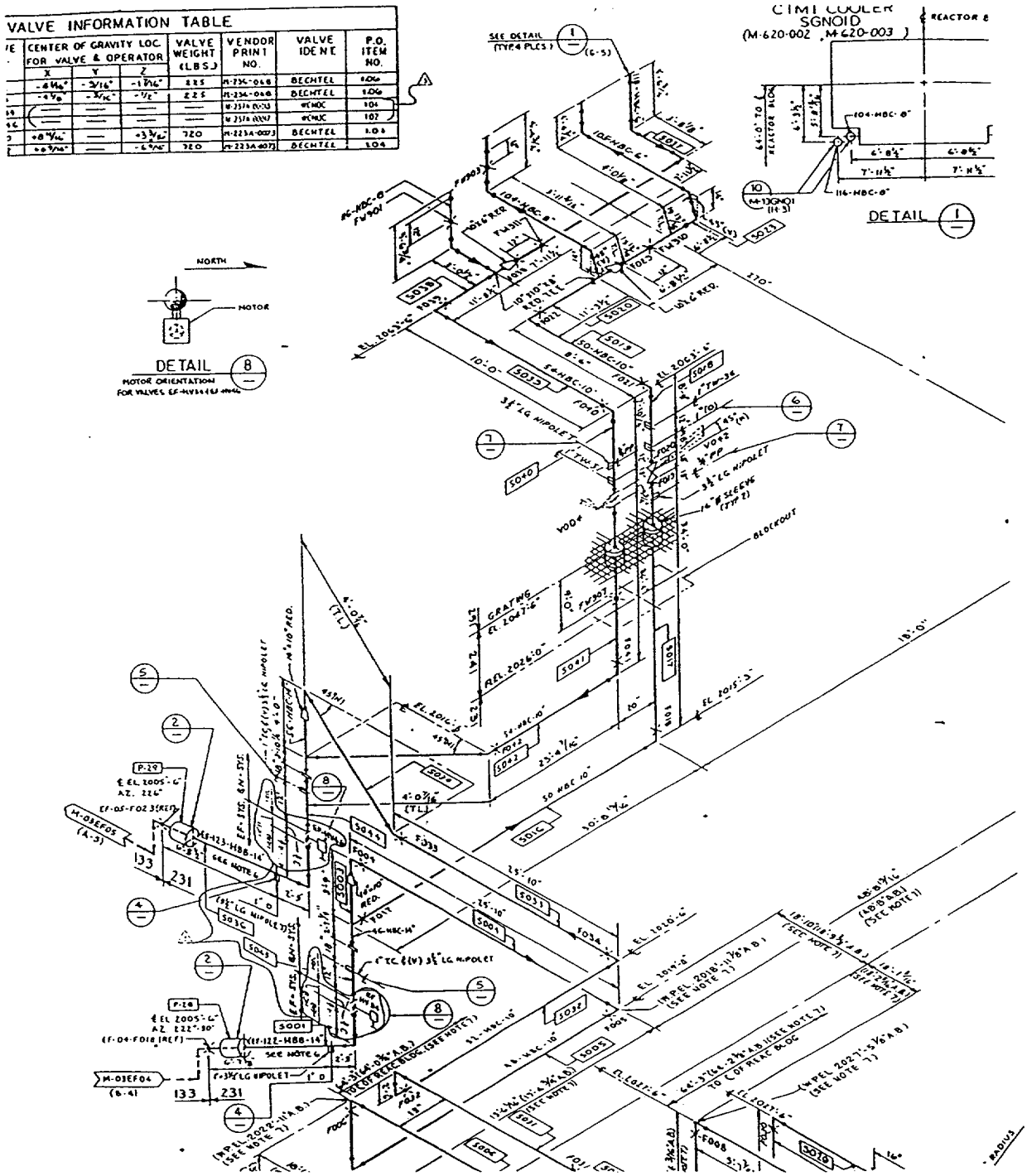

Figure 3C - B Train, D Cooler, Piping Configuration Inside Containment

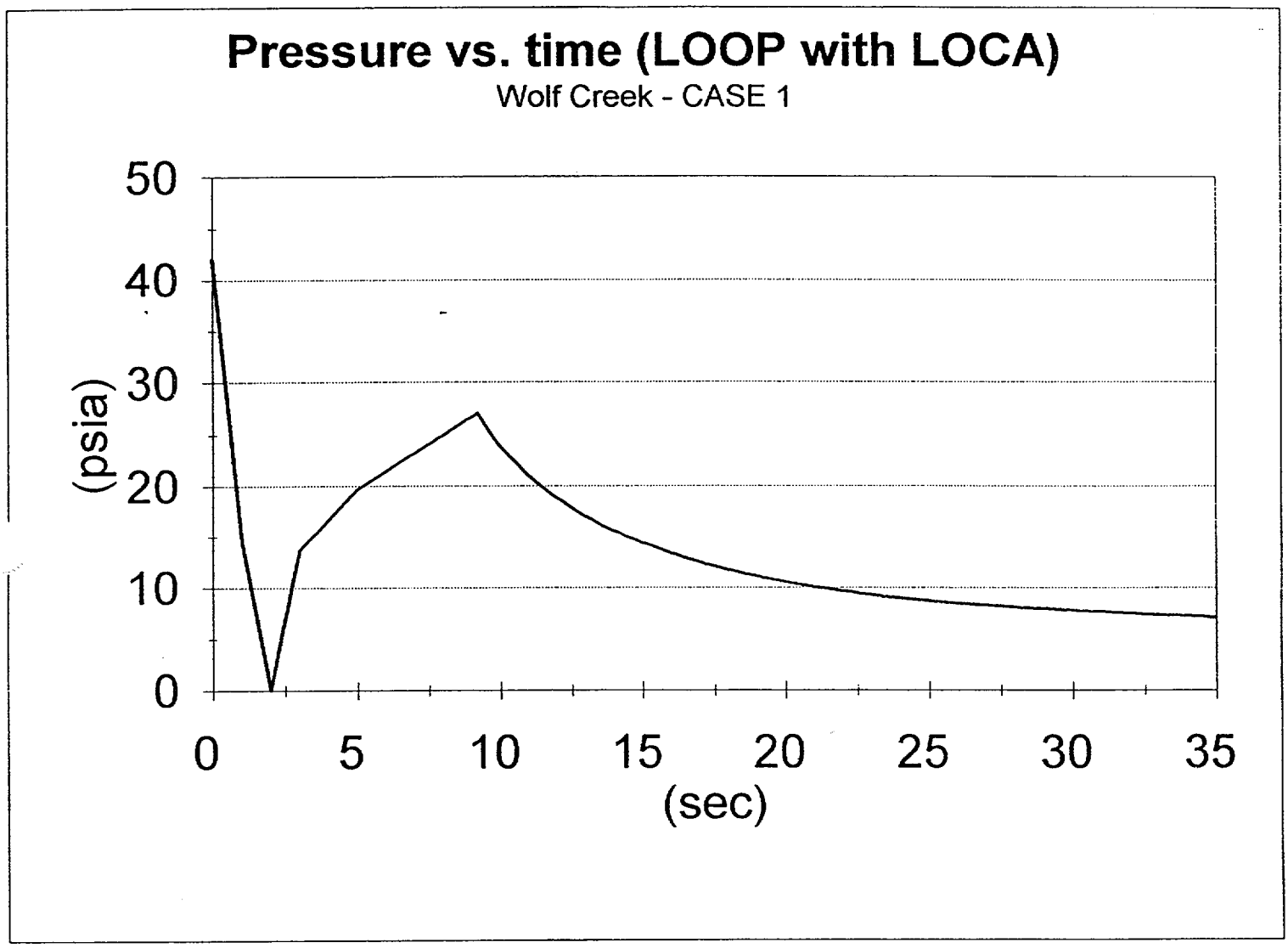

Figure 4A - Case 1 - Train A Pressure (SW supply isolated)

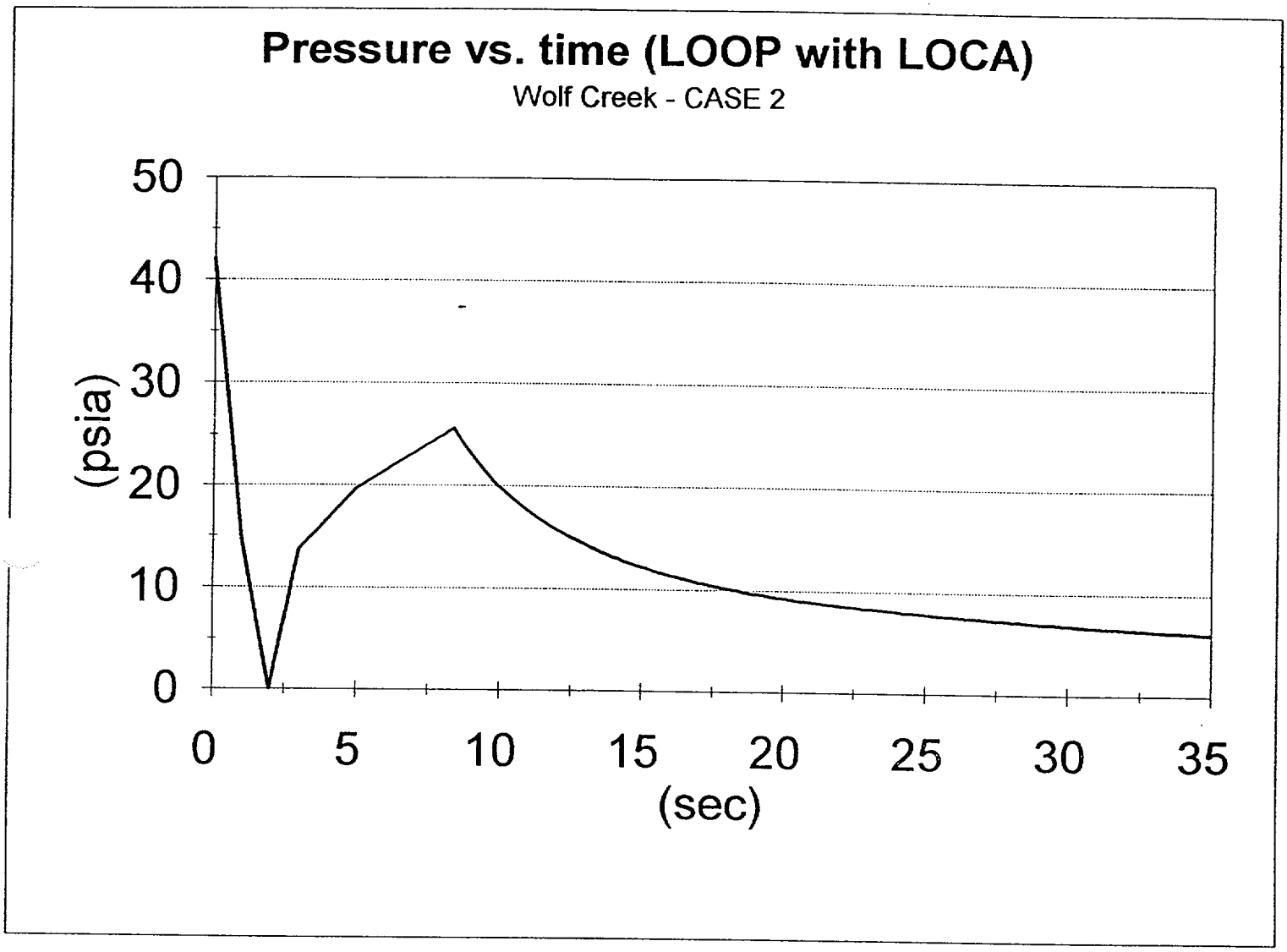

Figure 4B - Case 2 - Train B Pressure (SW supply open)

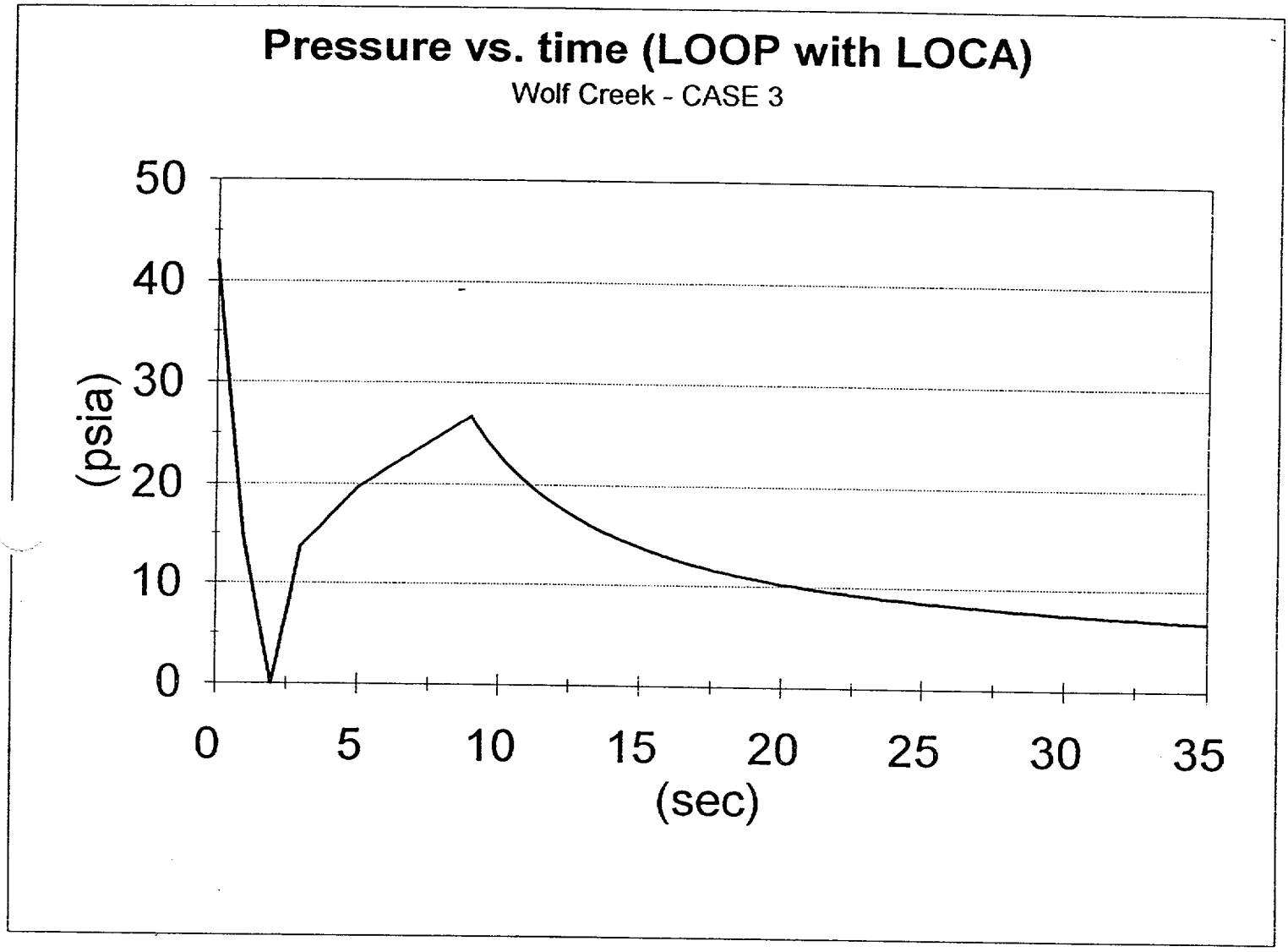

Figure 4C - Case 3 - Train B Pressure (SW supply isolated)

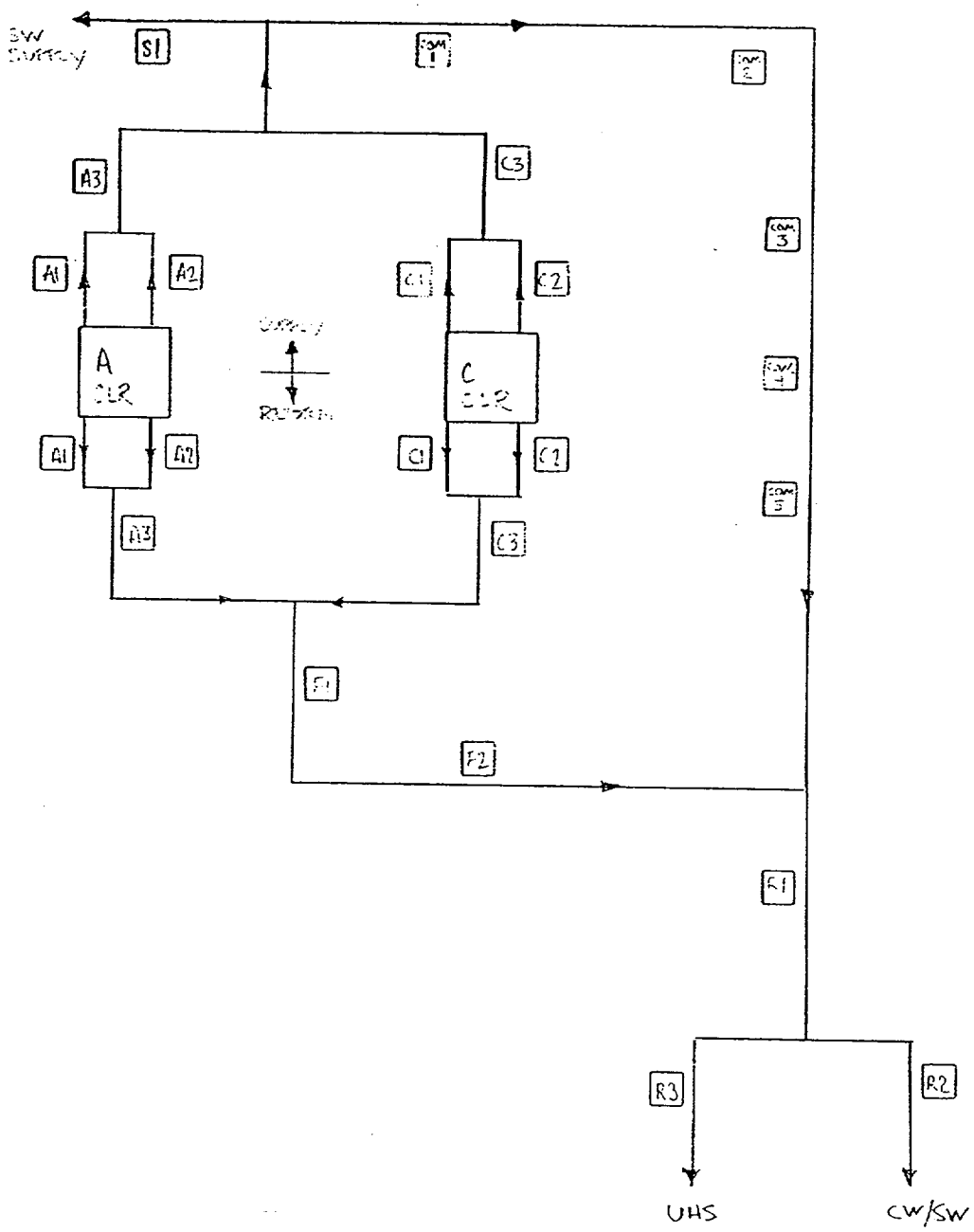

Figure 5 - Simplied Flow Resistance Diagram (refer to Appendix B)

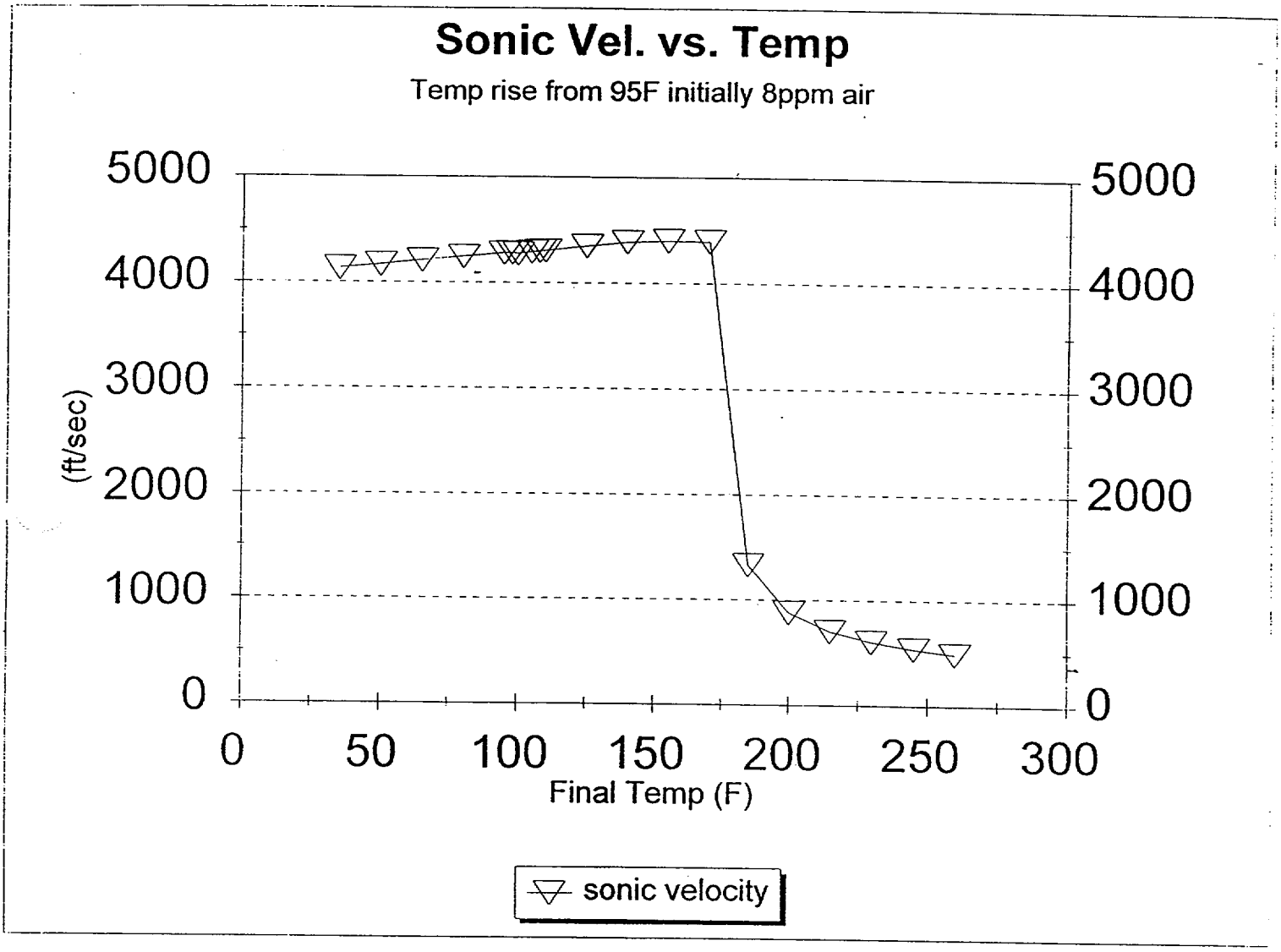

Figure 6 - Sonic Velocity Change With Temperature Rise

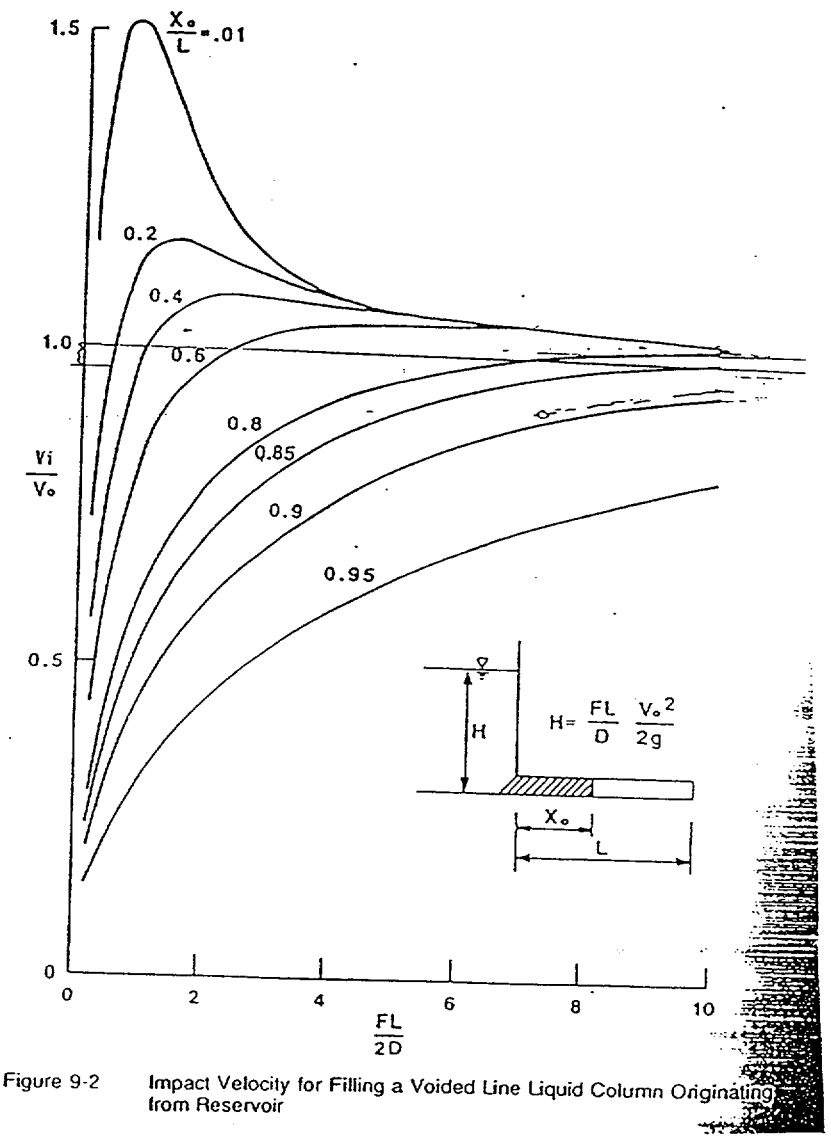

Figure 9-2 Impact Velocity for Filling a Voided Line Liquid Column Originating from Reservoir

Figure 7 - Impact Velocity Curve from Reference 17

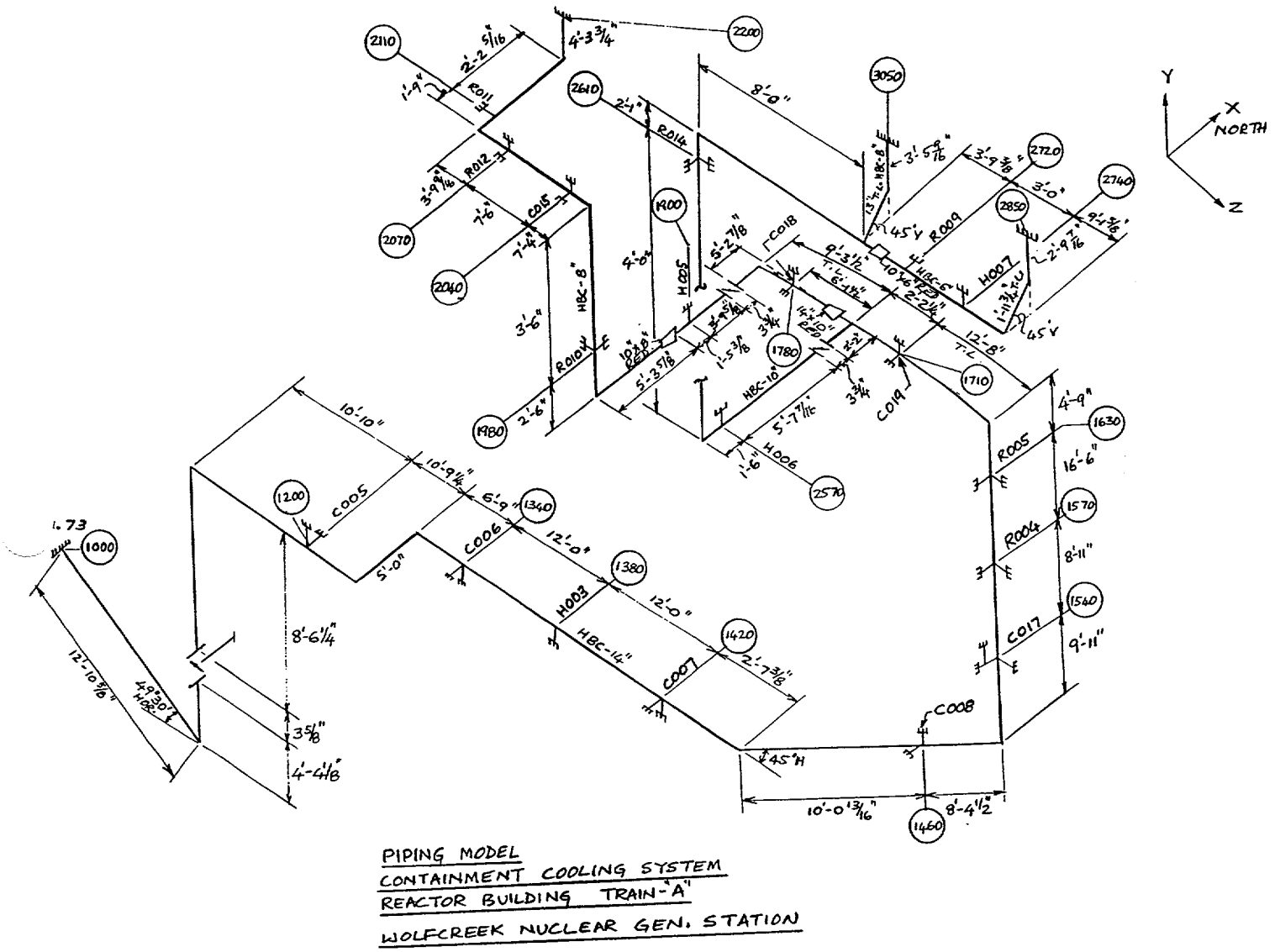

Figure 8 - Train A ADLPIPE Structural Assessment Model

ALTRAN CORPORATION

WOLF CREEK

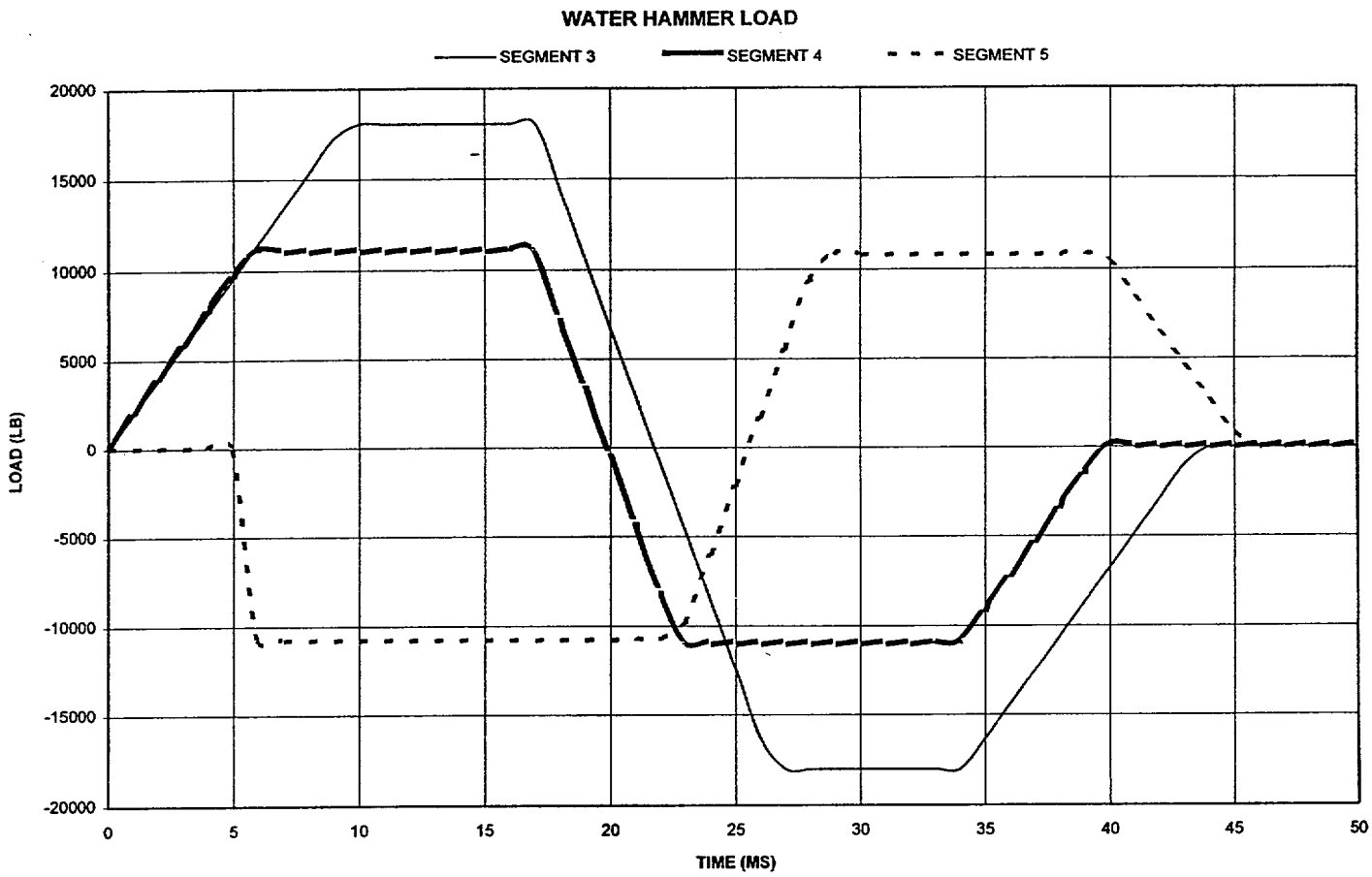

Figure 9 - ADLPIPE Structural Model Segment Forcing Functions Condensate Waterhammer

APPENDICES

The following Appendices are included as part of this evaluation:

Appendix A - Pressurization Spreadsheet for Cases 1, 2, & 3
Appendix B - System Resistance Spreadsheet for Cases 1, 2, & 3
Appendix C - Sonic Velocity Spreadsheet
Appendix D - Plant Data Including:

- IST Valve Data Sheets
- 11/21/96 Telecon: Bill Selbe (WCNOC) with Matt Zweigle (Altran)
- Containment Cooler Data Sheet

Appendix E - Test Results
Appdenix F - Fluid Structure Interaction
Appendix G – CIWH
Appendix H – Sonic Velocity

4

Appendix A - Pressurization Spreadsheet for Cases 1, 2, & 3
Number of pages including this sheet = 39

Altran Report
96227-TR-01 Rev. 0
Att./App. A Sh. A1

A	A	B	C	D	E	F	G	H	I	J	K	L	M	N	O
1						WOLF CREEK "A" TRAIN									
2	LOCA TEMP & SW PRESS														
3	TIME	Tcntmt	Psw	Psw	basis	repressurization curve equations below									
4	(sec)	(F)	(psia)	(psig)		are linear approximations (P=mt + b)									
5	0	---	42	50	assumed	m	b	from	to (sec)						
6	1	---	14.7	0	assumed	-27.3	42	0	1		dh	dV	dh/dV	Vdisplaced	
7	2	---	0	-14.7	assumed	-14.7	29.4	1	2		11.5	103.7	0.111	103.7	
8	3	208.4	13.7	-1	SA-90-064	13.7	-27.4	2	3		4.25	9.3	0.457	113	
9	5	227.1	19.7	5	"	3	4.7	3	5		0	32.8	0	145.8	
10	15	263.2	37.2	22.5	"	1.75	10.95	5	15		6	10.8	0.556	156.6	
11	30	269.7	41.8	27.1	"	0.307	32.6	15	30		0	64.2	0	220.8	
12	35	277.6	47.6	32.9	"	1.16	7	30	35		40.1	75.2	0.533	296	
13						above equations used until heater is drained'					0	142.3	0	438.3	
14						when heater is drained then P2=P1(V1/v2)^1.13									
15	d=	13.124	=inches												
16	dt=	0.2	=seconds (time step)												
17															
18	time	P	P	h1	P1+h1-1988	K	Q	Q	Vwtr	dV in dt	Vout	h_el	dh	hammer	
19		(psia)	(ft-gauge)	(ft)	(ft)		(gpm)	(ft3/s)	(ft3)	(ft3)	(ft3)	(ft)	(ft)	(psia)	
20		42										61.85		if void<	0.5
21	0	42.00	63.06	2080.50	155.56	28.00									stm/wtr
22	1	14.70	63.06	2080.50	155.56	28.00									
23	2	0.00	0.00	2080.50	92.50	28.00	6151.41	13.71	438.30	2.74	2.74	61.85	0.30	0	0
24	2.2	2.74	-33.96	2080.20	58.24	28.00	4881.02	10.88	435.56	2.18	4.92	61.55	0.24	0	0
25	2.4	5.48	-27.63	2079.95	64.33	28.00	5129.80	11.43	433.38	2.29	7.20	61.30	0.25	0	0
26	2.6	8.22	-21.30	2079.70	70.40	28.00	5366.60	11.96	431.10	2.39	9.59	61.05	0.27	0	0
27	2.8	10.96	-14.97	2079.44	76.47	28.00	5592.95	12.46	428.71	2.49	12.09	60.79	0.28	0	0
28	3	13.70	-8.64	2079.16	82.52	28.00	5810.10	12.95	426.21	2.59	14.68	60.51	0.29	0	0
29	3.2	14.30	-2.31	2078.87	88.56	28.00	6019.06	13.41	423.62	2.68	17.36	60.22	0.30	0	0
30	3.4	14.90	-0.92	2078.58	89.65	28.00	6055.94	13.49	420.94	2.70	20.06	59.93	0.30	0	0
31	3.6	15.50	0.46	2078.28	90.74	28.00	6092.53	13.58	418.24	2.72	22.77	59.63	0.30	0	0
32	3.8	16.10	1.85	2077.97	91.82	28.00	6128.84	13.66	415.53	2.73	25.50	59.32	0.30	0	0
33	4	16.70	3.23	2077.67	92.91	28.00	6164.89	13.74	412.80	2.75	28.25	59.02	0.30	0	0
34	4.2	17.30	4.62	2077.37	93.99	28.00	6200.66	13.82	410.05	2.76	31.01	58.72	0.31	0	0
35	4.4	17.90	6.01	2077.06	95.07	28.00	6236.17	13.90	407.29	2.78	33.79	58.41	0.31	0	0
36	4.6	18.50	7.39	2076.75	96.14	28.00	6271.42	13.97	404.51	2.79	36.59	58.10	0.31	0	0
37	4.8	19.10	8.78	2076.44	97.22	28.00	6306.42	14.05	401.71	2.81	39.40	57.79	0.31	0	0
38	5	19.70	10.16	2076.13	98.29	28.00	6341.17	14.13	398.90	2.83	42.22	57.48	0.31	0	0
39	5.2	20.05	11.55	2075.82	99.37	28.00	6375.67	14.21	396.08	2.84	45.06	57.17	0.32	0	0

Altran Report
96227-TR-01 Rev. 0

A	A	B	C	D	E	F	G	H	I	J	K	L	M	N	O
40	5.4	20.40	12.36	2075.50	99.86	28.00	6391.48	14.24	393.24	2.85	47.91	56.85	0.32	0	0
41	5.6	20.75	13.17	2075.19	100.35	28.00	6407.23	14.28	390.39	2.86	50.77	56.54	0.32	0	0
42	5.8	21.10	13.98	2074.87	100.85	28.00	6422.91	14.31	387.53	2.86	53.63	56.22	0.32	0	0
43	6	21.45	14.78	2074.55	101.34	28.00	6438.53	14.35	384.67	2.87	56.50	55.90	0.32	0	0
44	6.2	21.80	15.59	2074.23	101.83	28.00	6454.09	14.38	381.80	2.88	59.38	55.58	0.32	0	0
45	6.4	22.15	16.40	2073.92	102.32	28.00	6469.58	14.42	378.92	2.88	62.26	55.27	0.32	0	0
46	6.6	22.50	17.21	2073.60	102.81	28.00	6485.02	14.45	376.04	2.89	65.15	54.95	0.32	0	0
47	6.8	22.85	18.02	2073.28	103.29	28.00	6500.39	14.48	373.15	2.90	68.05	54.63	0.32	0	0
48	7	23.20	18.83	2072.95	103.78	28.00	6515.70	14.52	370.25	2.90	70.95	54.30	0.32	0	0
49	7.2	23.55	19.64	2072.63	104.27	28.00	6530.96	14.55	367.35	2.91	73.86	53.98	0.32	0	0
50	7.4	23.90	20.44	2072.31	104.75	28.00	6546.15	14.59	364.44	2.92	76.78	53.66	0.32	0	0
51	7.6	24.25	21.25	2071.99	105.24	28.00	6561.29	14.62	361.52	2.92	79.70	53.34	0.32	0	0
52	7.8	24.60	22.06	2071.66	105.72	28.00	6576.37	14.65	358.60	2.93	82.63	53.01	0.32	0	0
53	8	24.95	22.87	2071.34	106.21	28.00	6591.39	14.69	355.67	2.94	85.57	52.69	0.33	0	0
54	8.2	25.30	23.68	2071.01	106.69	28.00	6606.35	14.72	352.73	2.94	88.51	52.36	0.33	0	0
55	8.4	25.65	24.49	2070.68	107.17	28.00	6621.26	14.75	349.79	2.95	91.46	52.03	0.33	0	0
56	8.6	26.00	25.29	2070.36	107.65	28.00	6636.11	14.79	346.84	2.96	94.42	51.71	0.33	0	0
57	8.8	26.35	26.10	2070.03	108.13	28.00	6650.91	14.82	343.88	2.96	97.38	51.38	0.33	0	0
58	9	26.70	26.91	2069.70	108.61	28.00	6665.65	14.85	340.92	2.97	100.35	51.05	0.33	0	0
59	9.2	27.05	27.72	2069.37	109.09	28.00	6680.33	14.88	337.95	2.98	103.33	50.72	0.33	0	0
60	9.4	26.19	28.53	2069.04	109.57	28.00	6694.96	14.92	334.97	2.98	106.32	50.39	1.36	0	0
61	9.6	25.40	26.55	2067.68	106.23	28.00	6592.09	14.69	331.98	2.94	109.25	49.03	1.34	0	0
62	9.8	24.66	24.72	2066.33	103.05	28.00	6492.75	14.47	329.05	2.89	112.15	47.68	1.32	0	0
63	10	23.97	23.01	2065.01	100.02	28.00	6396.58	14.25	326.15	2.85	115.00	46.36	0.00	0	0
64	10.2	23.32	21.41	2065.01	98.43	28.00	6345.44	14.14	323.30	2.83	117.82	46.36	0.00	0	0
65	10.4	22.71	19.92	2065.01	96.93	28.00	6296.93	14.03	320.48	2.81	120.63	46.36	0.00	0	0
66	10.6	22.13	18.50	2065.01	95.51	28.00	6250.83	13.93	317.67	2.79	123.42	46.36	0.00	0	0
67	10.8	21.58	17.17	2065.01	94.18	28.00	6206.96	13.83	314.88	2.77	126.18	46.36	0.00	0	0
68	11	21.06	15.90	2065.01	92.91	28.00	6165.15	13.74	312.12	2.75	128.93	46.36	0.00	0	0
69	11.2	20.57	14.70	2065.01	91.71	28.00	6125.24	13.65	309.37	2.73	131.66	46.36	0.00	0	0
70	11.4	20.10	13.56	2065.01	90.58	28.00	6087.11	13.56	306.64	2.71	134.37	46.36	0.00	0	0
71	11.6	19.66	12.48	2065.01	89.49	28.00	6050.62	13.48	303.93	2.70	137.07	46.36	0.00	0	0
72	11.8	19.23	11.45	2065.01	88.46	28.00	6015.67	13.40	301.23	2.68	139.75	46.36	0.00	0	0
73	12	18.82	10.47	2065.01	87.48	28.00	5982.15	13.33	298.55	2.67	142.41	46.36	0.00	0	0
74	12.2	18.44	9.53	2065.01	86.54	28.00	5949.98	13.26	295.89	2.65	145.07	46.36	0.00	0	0
75	12.4	18.06	8.63	2065.01	85.64	28.00	5919.06	13.19	293.23	2.64	147.70	46.36	1.47	0	0
76	12.6	17.71	7.77	2063.55	83.32	28.00	5838.20	13.01	290.60	2.60	150.31	44.90	1.45	0	0
77	12.8	17.38	6.96	2062.10	81.06	28.00	5758.46	12.83	287.99	2.57	152.87	43.45	1.43	0	0
78	13	17.06	6.18	2060.68	78.86	28.00	5679.74	12.66	285.43	2.53	155.40	42.03	1.41	0	0

Altran Report
96227-TR-01 Rev. 0

A	A	B	C	D	E	F	G	H	I	J	K	L	M	N	O
79	13.2	16.75	5.44	2059.27	76.71	28.00	5602.00	12.48	282.90	2.50	157.90	40.62	0.00	0	0
80	13.4	16.46	4.74	2059.27	76.01	28.00	5576.26	12.42	280.40	2.48	160.38	40.62	0.00	0	0
81	13.6	16.18	4.06	2059.27	75.33	28.00	5551.38	12.37	277.92	2.47	162.86	40.62	0.00	0	0
82	13.8	15.91	3.41	2059.27	74.68	28.00	5527.31	12.32	275.44	2.46	165.32	40.62	0.00	0	0
83	14	15.64	2.78	2059.27	74.05	28.00	5504.00	12.26	272.98	2.45	167.77	40.62	0.00	0	0
84	14.2	15.39	2.18	2059.27	73.45	28.00	5481.42	12.21	270.53	2.44	170.22	40.62	0.00	0	0
85	14.4	15.14	1.59	2059.27	72.86	28.00	5459.53	12.16	268.08	2.43	172.65	40.62	0.00	0	0
86	14.6	14.91	1.03	2059.27	72.30	28.00	5438.30	12.12	265.65	2.42	175.07	40.62	0.00	0	0
87	14.8	14.68	0.48	2059.27	71.75	28.00	5417.70	12.07	263.23	2.41	177.49	40.62	0.00	0	0
88	15	14.46	-0.05	2059.27	71.22	28.00	5397.69	12.03	260.81	2.41	179.89	40.62	0.00	0	0
89	15.2	14.24	-0.56	2059.27	70.71	28.00	5378.26	11.98	258.41	2.40	182.29	40.62	0.00	0	0
90	15.4	14.03	-1.06	2059.27	70.21	28.00	5359.37	11.94	256.01	2.39	184.68	40.62	0.00	0	0
91	15.6	13.83	-1.54	2059.27	69.73	28.00	5341.01	11.90	253.62	2.38	187.06	40.62	0.00	0	0
92	15.8	13.64	-2.00	2059.27	69.27	28.00	5323.14	11.86	251.24	2.37	189.43	40.62	0.00	0	0
93	16	13.45	-2.45	2059.27	68.82	28.00	5305.75	11.82	248.87	2.36	191.79	40.62	0.00	0	0
94	16.2	13.26	-2.89	2059.27	68.38	28.00	5288.82	11.78	246.51	2.36	194.15	40.62	0.00	0	0
95	16.4	13.08	-3.32	2059.27	67.95	28.00	5272.33	11.75	244.15	2.35	196.50	40.62	0.00	0	0
96	16.6	12.91	-3.73	2059.27	67.54	28.00	5256.26	11.71	241.80	2.34	198.84	40.62	0.00	0	0
97	16.8	12.74	-4.13	2059.27	67.14	28.00	5240.59	11.68	239.46	2.34	201.18	40.62	0.00	0	0
98	17	12.58	-4.53	2059.27	66.74	28.00	5225.31	11.64	237.12	2.33	203.51	40.62	0.00	0	0
99	17.2	12.42	-4.91	2059.27	66.36	28.00	5210.41	11.61	234.79	2.32	205.83	40.62	0.00	0	0
100	17.4	12.26	-5.28	2059.27	65.99	28.00	5195.86	11.58	232.47	2.32	208.14	40.62	0.00	0	0
101	17.6	12.11	-5.64	2059.27	65.63	28.00	5181.66	11.55	230.16	2.31	210.45	40.62	0.00	0	0
102	17.8	11.96	-5.99	2059.27	65.28	28.00	5167.79	11.51	227.85	2.30	212.76	40.62	0.00	0	0
103	18	11.82	-6.33	2059.27	64.94	28.00	5154.24	11.48	225.54	2.30	215.05	40.62	0.00	0	0
104	18.2	11.68	-6.66	2059.27	64.61	28.00	5141.00	11.45	223.25	2.29	217.34	40.62	0.00	0	0
105	18.4	11.54	-6.99	2059.27	64.28	28.00	5128.06	11.43	220.96	2.29	219.63	40.62	0.00	0	0
106	18.6	11.40	-7.30	2059.27	63.97	28.00	5115.40	11.40	218.67	2.28	221.91	40.62	1.22	0	0
107	18.8	11.27	-7.61	2058.05	62.44	28.00	5054.07	11.26	216.39	2.25	224.16	39.40	1.20	0	0
108	19	11.15	-7.91	2056.85	60.94	28.00	4992.99	11.13	214.14	2.23	226.39	38.20	1.19	0	0
109	19.2	11.03	-8.20	2055.67	59.47	28.00	4932.18	10.99	211.91	2.20	228.58	37.02	1.17	0	0
110	19.4	10.91	-8.48	2054.49	58.01	28.00	4871.60	10.85	209.72	2.17	230.76	35.84	1.16	0	0
111	19.6	10.80	-8.75	2053.34	56.59	28.00	4811.26	10.72	207.54	2.14	232.90	34.69	1.14	0	0
112	19.8	10.69	-9.01	2052.19	55.18	28.00	4751.14	10.59	205.40	2.12	235.02	33.54	1.13	0	0
113	20	10.58	-9.27	2051.07	53.80	28.00	4691.23	10.45	203.28	2.09	237.11	32.42	1.11	0	0
114	20.2	10.48	-9.51	2049.95	52.44	28.00	4631.53	10.32	201.19	2.06	239.17	31.30	1.10	0	0
115	20.4	10.38	-9.75	2048.85	51.10	28.00	4572.02	10.19	199.13	2.04	241.21	30.20	1.09	0	0
116	20.6	10.28	-9.98	2047.76	49.78	28.00	4512.70	10.06	197.09	2.01	243.22	29.11	1.07	0	0
117	20.8	10.19	-10.21	2046.69	48.48	28.00	4453.56	9.92	195.08	1.98	245.20	28.04	1.06	0	0

Altran Report
96027-TR-01 Rev. 0
4 of 5

A	A	B	C	D	E	F	G	H	I	J	K	L	M	N	O
118	21	10.10	-10.42	2045.63	47.21	28.00	4394.59	9.79	193.10	1.96	247.16	26.98	1.04	0	0
119	21.2	10.01	-10.63	2044.59	45.95	28.00	4335.79	9.66	191.14	1.93	249.10	25.94	1.03	0	0
120	21.4	9.92	-10.84	2043.56	44.72	28.00	4277.15	9.53	189.20	1.91	251.00	24.91	1.02	0	0
121	21.6	9.84	-11.04	2042.54	43.51	28.00	4218.66	9.40	187.30	1.88	252.88	23.89	1.00	0	0
122	21.8	9.76	-11.23	2041.54	42.31	28.00	4160.32	9.27	185.42	1.85	254.74	22.89	0.99	0	0
123	22	9.68	-11.42	2040.55	41.13	28.00	4102.12	9.14	183.56	1.83	256.56	21.90	0.97	0	0
124	22.2	9.60	-11.60	2039.58	39.98	28.00	4044.06	9.01	181.74	1.80	258.37	20.93	0.96	0	0
125	22.4	9.53	-11.77	2038.61	38.84	28.00	3986.13	8.88	179.93	1.78	260.14	19.96	0.95	0	0
126	22.6	9.46	-11.94	2037.67	37.72	28.00	3928.33	8.75	178.16	1.75	261.89	19.02	0.93	0	0
127	22.8	9.39	-12.11	2036.73	36.62	28.00	3870.65	8.62	176.41	1.72	263.62	18.08	0.92	0	0
128	23	9.32	-12.27	2035.81	35.54	28.00	3813.08	8.50	174.68	1.70	265.32	17.16	0.91	0	0
129	23.2	9.25	-12.43	2034.91	34.48	28.00	3755.63	8.37	172.98	1.67	266.99	16.26	0.89	0	0
130	23.4	9.19	-12.58	2034.02	33.43	28.00	3698.29	8.24	171.31	1.65	268.64	15.37	0.88	0	0
131	23.6	9.13	-12.73	2033.14	32.41	28.00	3641.05	8.11	169.66	1.62	270.26	14.49	0.87	0	0
132	23.8	9.07	-12.87	2032.27	31.40	28.00	3583.90	7.99	168.04	1.60	271.86	13.62	0.85	0	0
133	24	9.01	-13.01	2031.42	30.41	28.00	3526.86	7.86	166.44	1.57	273.43	12.77	0.84	0	0
134	24.2	8.95	-13.15	2030.58	29.43	28.00	3469.91	7.73	164.87	1.55	274.98	11.93	0.82	0	0
135	24.4	8.89	-13.28	2029.76	28.48	28.00	3413.05	7.60	163.32	1.52	276.50	11.11	0.81	0	0
136	24.6	8.84	-13.41	2028.95	27.54	28.00	3356.27	7.48	161.80	1.50	277.99	10.30	0.80	0	0
137	24.8	8.79	-13.53	2028.15	26.61	28.00	3299.58	7.35	160.31	1.47	279.46	9.50	0.78	0	0
138	25	8.74	-13.66	2027.36	25.71	28.00	3242.96	7.23	158.84	1.45	280.91	8.71	0.77	0	0
139	25.2	8.69	-13.77	2026.59	24.82	28.00	3186.42	7.10	157.39	1.42	282.33	7.94	0.76	0	0
140	25.4	8.64	-13.89	2025.84	23.95	28.00	3129.96	6.97	155.97	1.39	283.72	7.19	0.74	0	0
141	25.6	8.59	-14.00	2025.09	23.09	28.00	3073.56	6.85	154.58	1.37	285.09	6.44	0.73	0	0
142	25.8	8.55	-14.11	2024.36	22.25	28.00	3017.23	6.72	153.21	1.34	286.44	5.71	0.72	0	0
143	26	8.50	-14.21	2023.65	21.43	28.00	2960.97	6.60	151.86	1.32	287.76	5.00	0.70	0	0
144	26.2	8.46	-14.32	2022.94	20.63	28.00	2904.76	6.47	150.54	1.29	289.05	4.29	0.69	0	0
145	26.4	8.42	-14.42	2022.25	19.84	28.00	2848.62	6.35	149.25	1.27	290.32	3.60	0.68	0	0
146	26.6	8.38	-14.51	2021.57	19.06	28.00	2792.53	6.22	147.98	1.24	291.56	2.92	0.66	0	0
147	26.8	8.34	-14.61	2020.91	18.31	28.00	2736.50	6.10	146.74	1.22	292.78	2.26	0.65	0	0
148	27	8.30	-14.70	2020.26	17.56	28.00	2680.51	5.97	145.52	1.19	293.98	1.61	0.64	0	0
149	27.2	8.26	-14.79	2019.62	16.84	28.00	2624.58	5.85	144.32	1.17	295.15	0.97	0.62	0	0
150	27.4	8.23	-14.87	2019.00	16.13	28.00	2568.69	5.72	143.15	1.14	296.29	0.35	0.00	24.1098	0.0021
151	27.6	8.19	-14.95	2019.00	16.05	28.00	2562.05	5.71	142.01	1.14	297.44	0.35	0.00	53.4315	0.0102
152	27.8	8.16	-15.04	2019.00	15.96	28.00	2555.46	5.69	140.86	1.14	298.57	0.35	0.00	71.6941	0.0184
153	28	8.12	-15.12	2019.00	15.88	28.00	2548.93	5.68	139.73	1.14	299.71	0.35	0.00	86.2393	0.0268
154	28.2	8.09	-15.20	2019.00	15.80	28.00	2542.45	5.66	138.59	1.13	300.84	0.35	0.00	98.7271	0.0352
155	28.4	8.05	-15.28	2019.00	15.72	28.00	2536.02	5.65	137.46	1.13	301.97	0.35	0.00	109.864	0.0438
156	28.6	8.02	-15.36	2019.00	15.64	28.00	2529.64	5.64	136.33	1.13	303.10	0.35	0.00	120.029	0.0525

Altran Report
96227-TR-01 Rev. 0
Att./App. A Sh. A5

A	A	B	C	D	E	F	G	H	I	J	K	L	M	N	O
157	28.8	7.98	-15.44	2019.00	15.56	28.00	2523.31	5.62	135.20	1.12	304.22	0.35	0.00	129.454	0.0613
158	29	7.95	-15.51	2019.00	15.49	28.00	2517.04	5.61	134.08	1.12	305.35	0.35	0.00	138.293	0.0703
159	29.2	7.92	-15.59	2019.00	15.41	28.00	2510.81	5.59	132.95	1.12	306.47	0.35	0.00	146.653	0.0794
160	29.4	7.89	-15.67	2019.00	15.33	28.00	2504.63	5.58	131.83	1.12	307.58	0.35	0.00	154.615	0.0886
161	29.6	7.85	-15.74	2019.00	15.26	28.00	2498.50	5.57	130.72	1.11	308.69	0.35	0.00	162.239	0.0979
162	29.8	7.82	-15.81	2019.00	15.19	28.00	2492.41	5.55	129.61	1.11	309.81	0.35	0.00	169.573	0.1074
163	30	7.79	-15.89	2019.00	15.11	28.00	2486.38	5.54	128.49	1.11	310.91	0.35	0.00	176.655	0.1171
164	30.2	7.76	-15.96	2019.00	15.04	28.00	2480.38	5.53	127.39	1.11	312.02	0.35	0.00	183.515	0.1268
165	30.4	7.73	-16.03	2019.00	14.97	28.00	2474.44	5.51	126.28	1.10	313.12	0.35	0.00	190.181	0.1368
166	30.6	7.70	-16.10	2019.00	14.90	28.00	2468.54	5.50	125.18	1.10	314.22	0.35	0.00	196.673	0.1469
167	30.8	7.67	-16.17	2019.00	14.83	28.00	2462.68	5.49	124.08	1.10	315.32	0.35	0.00	203.01	0.1571
168	31	7.64	-16.24	2019.00	14.76	28.00	2456.87	5.47	122.98	1.09	316.41	0.35	0.00	209.209	0.1675
169	31.2	7.61	-16.31	2019.00	14.69	28.00	2451.09	5.46	121.89	1.09	317.51	0.35	0.00	215.282	0.178
170	31.4	7.58	-16.38	2019.00	14.62	28.00	2445.37	5.45	120.79	1.09	318.60	0.35	0.00	221.242	0.1888
171	31.6	7.55	-16.45	2019.00	14.55	28.00	2439.68	5.44	119.70	1.09	319.68	0.35	0.00	227.101	0.1997
172	31.8	7.52	-16.52	2019.00	14.48	28.00	2434.03	5.42	118.62	1.08	320.77	0.35	0.00	232.866	0.2107
173	32	7.49	-16.58	2019.00	14.42	28.00	2428.43	5.41	117.53	1.08	321.85	0.35	0.00	238.547	0.222

Altran Report
96227-TR-01 Rev. 0
Att./App. A Sh. A6

A:F1:	'W O L F C R E E K "A" TRAIN
A:A2:	'LOCA TEMP & SW PRESS
A:A3:	'TIME
A:B3:	'Tcntmt
A:C3:	'Psw
A:D3:	'Psw
A:E3:	'basis
A:F3:	'repressurization curve equations belo
A:A4:	'(sec)
A:B4:	'(F)
A:C4:	'(psia)
A:D4:	'(psig)
A:F4:	'are linear approximations (P=mt + b
A:A5:	0
A:B5:	"---
A:C5:	42
A:D5:	50
A:E5:	'assumed
A:F5:	'm
A:G5:	'b
A:H5:	'from
A:I5:	'to (sec)
A:A6:	1
A:B6:	"---
A:C6:	14.7
A:D6:	(C6-14.7)
A:E6:	'assumed
A:F6:	(C6-C5)/(A6-A5)
A:G6:	(C5-F6*A5)
A:H6:	(A5)
A:I6:	(A6)
A:K6:	'dh
A:L6:	'dV
A:M6:	'dh/dV

Altran Report
96227-TR-01 Rev. 0
Att./App. A Sh. A7

A:N6:	'Vdisplaced
A:A7:	2
A:B7:	"---
A:C7:	0
A:D7:	(C7-14.7)
A:E7:	'assumed
A:F7:	(C7-C6)/(A7-A6)
A:G7:	(C6-F7*A6)
A:H7:	(A6)
A:I7:	(A7)
A:K7:	11.5
A:L7:	103.7
A:M7:	(K7/L7)
A:N7:	(L7+N6)
A:A8:	3
A:B8:	208.4
A:C8:	13.7
A:D8:	(C8-14.7)
A:E8:	'SA-90-064
A:F8:	(C8-C7)/(A8-A7)
A:G8:	(C7-F8*A7)
A:H8:	(A7)
A:I8:	(A8)
A:K8:	4.25
A:L8:	9.3
A:M8:	(K8/L8)
A:N8:	(L8+N7)
A:A9:	5
A:B9:	227.1
A:C9:	19.7
A:D9:	(C9-14.7)
A:E9:	"'
A:F9:	(C9-C8)/(A9-A8)
A:G9:	(C8-F9*A8)

A:H9:	(A8)
A:I9:	(A9)
A:K9:	0
A:L9:	32.8
A:M9:	(K9/L9)
A:N9:	(L9+N8)
A:A10:	15
A:B10:	263.2
A:C10:	37.2
A:D10:	(C10-14.7)
A:E10:	""
A:F10:	(C10-C9)/(A10-A9)
A:G10:	(C9-F10*A9)
A:H10:	(A9)
A:I10:	(A10)
A:K10:	6
A:L10:	10.8
A:M10:	(K10/L10)
A:N10:	(L10+N9)
A:A11:	30
A:B11:	269.7
A:C11:	41.8
A:D11:	(C11-14.7)
A:E11:	""
A:F11:	(C11-C10)/(A11-A10)
A:G11:	(C10-F11*A10)
A:H11:	(A10)
A:I11:	(A11)
A:K11:	0
A:L11:	64.2
A:M11:	(K11/L11)
A:N11:	(L11+N10)
A:A12:	35
A:B12:	277.6

Altran Report
96227-TR-01 Rev. 0
Att./App. A Sh. A9

A:C12:	47.6
A:D12:	(C12-14.7)
A:E12:	""
A:F12:	(C12-C11)/(A12-A11)
A:G12:	(C11-F12*A11)
A:H12:	(A11)
A:I12:	(A12)
A:K12:	40.1
A:L12:	75.2
A:M12:	(K12/L12)
A:N12:	(L12+N11)
A:F13:	'above equations used until heater is draine
A:K13:	0
A:L13:	142.3
A:M13:	(K13/L13)
A:N13:	(L13+N12)
A:F14:	'when heater is drained then P2=P1(V1/v2)^1.1
A:A15:	"d=
A:B15:	13.124
A:C15:	'=inches
A:A16:	"dt=
A:B16:	0.2
A:C16:	'=seconds (time step)
A:A18:	'time
A:B18:	'P
A:C18:	'P
A:D18:	'h1
A:E18:	'P1+h1-1988
A:F18:	'K
A:G18:	'Q
A:H18:	'Q
A:I18:	'Vwtr
A:J18:	'dV in dt
A:K18:	'Vout

Altran Report
96227-TR-01 Rev. 0
Att./App. A Sh. A10

```
A:L18:   'h_el
A:M18:   'dh
A:N18:   'hammer
A:B19:   '(psia)
A:C19:   '(ft-gauge)
A:D19:   '(ft)
A:E19:   '(ft)
A:G19:   '(gpm)
A:H19:   '(ft3/s)
A:I19:   '(ft3)
A:J19:   '(ft3)
A:K19:   '(ft3)
A:L19:   '(ft)
A:M19:   '(ft)
A:N19:   '(psia)
A:B20:   42
A:L20:   @SUM(K7..K13)
A:N20:   'if void<
A:O20:   0.5
A:A21:   0
A:B21:   @IF(L$7<K21,B20*(K20/K21)^1.13,(@IF(A21<A$6,F$6*A21+G$6,@IF(A21<A$7,F$7*A21+G$7,@IF(A21<A$8,F$8*A21+G
         $8,@IF(A21<A$9,F$9*A21+G$9,@IF(A21<A$10,F$10*A21+G$10,@IF(A21<A$11,F$11*A21+G$11,F$12*A21+G$12))))))))
A:C21:   (B20-14.7)*2.31
A:D21:   2080.5
A:E21:   (C21+D21-1988)
A:F21:   28
A:I21:   '
A:O21:   'stm/wtr
A:A22:   1
A:B22:   @IF(L$7<K22,B21*(K21/K22)^1.13,(@IF(A22<A$6,F$6*A22+G$6,@IF(A22<A$7,F$7*A22+G$7,@IF(A22<A$8,F$8*A22+G
         $8,@IF(A22<A$9,F$9*A22+G$9,@IF(A22<A$10,F$10*A22+G$10,@IF(A22<A$11,F$11*A22+G$11,F$12*A22+G$12))))))))
A:C22:   (B21-14.7)*2.31
A:D22:   2080.5
A:E22:   (C22+D22-1988)
```

Altran Report
96227-TR-01 Rev. 0
Att./App. A Sh. A 11

```
A:F22:   (F21)
A:A23:   2
A:B23:   @IF(L$7<K23,B22*(K22/K23)^1.13,(@IF(A23<A$6,F$6*A23+G$6,@IF(A23<A$7,F$7*A23+G$7,@IF(A23<A$8,F$8*A23+G
         $8,@IF(A23<A$9,F$9*A23+G$9,@IF(A23<A$10,F$10*A23+G$10,@IF(A23<A$11,F$11*A23+G$11,F$12*A23+G$12)))))))
A:C23:   (B22-14.7)*2.31
A:D23:   2080.5
A:E23:   (C23+D23-1988)
A:F23:   (F22)
A:G23:   (@SQRT(E23/(F23)/0.00259))*((B$15)^2)
A:H23:   (G23/7.48/60)
A:I23:   (N13)
A:J23:   (B16)*(H23)
A:K23:   (K20)+(J23)
A:L23:   (L20)
A:M23:   @IF(K23<N$7,J23*M$7,@IF(K23<N$8,J23*M$8,@IF(K23<N$9,J23*M$9,@IF(K23<N$10,J23*M$10,@IF(K23<N$11,J23*M
         11,@IF(K23<N$12,J23*M$12,J23*M$13))))))
A:N23:   @IF(M23=0#AND#K23>N$12#AND#K23<N$13#AND#(K23-N$12)/(N$13-K23)<O$20,0.707*2300*@SQRT(B23*60*(K23-N
         $12)/(N$13-K23)/32.2/144),0)
A:O23:   @IF(M23=0#AND#K23>N$12#AND#K23<N$13,(K23-N$12)/(N$13-K23),0
A:A24:   (A23+B$16)
A:B24:   @IF(L$7<K24,B23*(K23/K24)^1.13,(@IF(A24<A$6,F$6*A24+G$6,@IF(A24<A$7,F$7*A24+G$7,@IF(A24<A$8,F$8*A24+G
         $8,@IF(A24<A$9,F$9*A24+G$9,@IF(A24<A$10,F$10*A24+G$10,@IF(A24<A$11,F$11*A24+G$11,F$12*A24+G$12)))))))
A:C24:   (B23-14.7)*2.31
A:D24:   (D23-M23)
A:E24:   (C24+D24-1988)
A:F24:   (F23)
A:G24:   (@SQRT(E24/(F24)/0.00259))*((B$15)^2)
A:H24:   (G24/7.48/60)
A:I24:   (I23-J23)
A:J24:   (B$16)*(H24)
A:K24:   (K23)+(J24)
A:L24:   (L23-M23)
A:M24:   @IF(K24<N$7,J24*M$7,@IF(K24<N$8,J24*M$8,@IF(K24<N$9,J24*M$9,@IF(K24<N$10,J24*M$10,@IF(K24<N$11,J24*M
         11,@IF(K24<N$12,J24*M$12,J24*M$13))))))
```

A:N24: @IF(M24=0#AND#K24>N$12#AND#K24<N$13#AND#(K24-N$12)/(N$13-K24)<O$20,0.707*2300*@SQRT(B24*60*(K24-N$12)/(N$13-K24)/32.2/144),0)

A:O24: @IF(M24=0#AND#K24>N$12#AND#K24<N$13,(K24-N$12)/(N$13-K24),0

A:A25: (A24+B$16)

A:B25: @IF(L$7<K25,B24*(K24/K25)^1.13,(@IF(A25<A$6,F$6*A25+G$6,@IF(A25<A$7,F$7*A25+G$7,@IF(A25<A$8,F$8*A25+G$8,@IF(A25<A$9,F$9*A25+G$9,@IF(A25<A$10,F$10*A25+G$10,@IF(A25<A$11,F$11*A25+G$11,F$12*A25+G$12)))))))

A:C25: (B24-14.7)*2.31

A:D25: (D24-M24)

A:E25: (C25+D25-1988)

A:F25: (F24)

A:G25: (@SQRT(E25/(F25)/0.00259))*((B$15)^2)

A:H25: (G25/7.48/60)

A:I25: (I24-J24)

A:J25: (B$16)*(H25)

A:K25: (K24)+(J25)

A:L25: (L24-M24)

A:M25: @IF(K25<N$7,J25*M$7,@IF(K25<N$8,J25*M$8,@IF(K25<N$9,J25*M$9,@IF(K25<N$10,J25*M$10,@IF(K25<N$11,J25*M11,@IF(K25<N$12,J25*M$12,J25*M$13))))))

A:N25: @IF(M25=0#AND#K25>N$12#AND#K25<N$13#AND#(K25-N$12)/(N$13-K25)<O$20,0.707*2300*@SQRT(B25*60*(K25-N$12)/(N$13-K25)/32.2/144),0)

A:O25: @IF(M25=0#AND#K25>N$12#AND#K25<N$13,(K25-N$12)/(N$13-K25),0

Altran Report
96227-TR-01 Rev. 0
Att./App. A Sh. A13

A	A	B	C	D	E	F	G	H	I	J	K	L	M	N	O
1						WOLF CREEK "B" TRAIN									
2	LOCA TEMP & SW PRESS														
3	TIME	Tcntmt	Psw	Psw	basis	repressurization curve equations below									
4	(sec)	(F)	(psia)	(psig)		are linear approximations (P=mt + b)									
5	0	---	42	50	assumed	m	b	from	to (sec)						
6	1	---	14.7	0	assumed	-27.3	42	0	1		dh	dV	dh/dV	Vdisplaced	
7	2	---	0	-14.7	assumed	-14.7	29.4	1	2		11.5	103.7	0.111	103.7	
8	3	208.4	13.7	-1	SA-90-064	13.7	-27.4	2	3		5.5	18.71	0.294	122.41	
9	5	227.1	19.7	5	"	3	4.7	3	5		0	61.96	0	184.37	
10	15	263.2	37.2	22.5	"	1.75	10.95	5	15		36	78.84	0.457	263.21	
11	30	269.7	41.8	27.1	"	0.307	32.6	15	30		0	144.8	0	408.01	
12	35	277.6	47.6	32.9	"	1.16	7	30	35		0	0.1	0	408.11	
13						above equations used until heater is drained'					0	0.1	0	408.21	
14						when heater is drained then P2=P1(V1/v2)^1.13									
15	d=	13.124	=inches												
16	dt=	0.2	=seconds (time step)												
17															
18	time	P	P	h1	P1+h1-1988	K	Q	Q	Vwtr	dV in dt	Vout	h_el	dh	hammer	
19		(psia)	(ft-gauge)	(ft)	(ft)		(gpm)	(ft3/s)	(ft3)	(ft3)	(ft3)	(ft)	(ft)	(psia)	
20		42										53		if void<	0.5
21	0	42.00	63.06	2080.50	155.56	22.00									stm/wtr
22	1	14.70	63.06	2080.50	155.56	22.00									
23	2	0.00	0.00	2080.50	92.50	22.00	6939.72	15.46	408.21	3.09	3.09	53.00	0.34	0	0
24	2.2	2.74	-33.96	2080.16	58.20	22.00	5504.69	12.27	405.12	2.45	5.55	52.66	0.27	0	0
25	2.4	5.48	-27.63	2079.89	64.26	22.00	5784.06	12.89	402.66	2.58	8.12	52.39	0.29	0	0
26	2.6	8.22	-21.30	2079.60	70.30	22.00	6049.95	13.48	400.09	2.70	10.82	52.10	0.30	0	0
27	2.8	10.96	-14.97	2079.30	76.33	22.00	6304.10	14.05	397.39	2.81	13.63	51.80	0.31	0	0
28	3	13.70	-8.64	2078.99	82.35	22.00	6547.88	14.59	394.58	2.92	16.55	51.49	0.32	0	0
29	3.2	14.30	-2.31	2078.67	88.36	22.00	6782.45	15.11	391.66	3.02	19.57	51.17	0.34	0	0
30	3.4	14.90	-0.92	2078.33	89.41	22.00	6822.67	15.20	388.64	3.04	22.61	50.83	0.34	0	0
31	3.6	15.50	0.46	2077.99	90.45	22.00	6862.57	15.29	385.60	3.06	25.67	50.49	0.34	0	0
32	3.8	16.10	1.85	2077.65	91.50	22.00	6902.17	15.38	382.54	3.08	28.74	50.15	0.34	0	0
33	4	16.70	3.23	2077.31	92.55	22.00	6941.46	15.47	379.47	3.09	31.84	49.81	0.34	0	0
34	4.2	17.30	4.62	2076.97	93.59	22.00	6980.47	15.55	376.37	3.11	34.95	49.47	0.34	0	0
35	4.4	17.90	6.01	2076.62	94.63	22.00	7019.18	15.64	373.26	3.13	38.08	49.12	0.35	0	0
36	4.6	18.50	7.39	2076.28	95.67	22.00	7057.62	15.73	370.13	3.15	41.22	48.78	0.35	0	0
37	4.8	19.10	8.78	2075.93	96.71	22.00	7095.77	15.81	366.99	3.16	44.38	48.43	0.35	0	0
38	5	19.70	10.16	2075.58	97.74	22.00	7133.65	15.89	363.83	3.18	47.56	48.08	0.35	0	0
39	5.2	20.05	11.55	2075.23	98.78	22.00	7171.27	15.98	360.65	3.20	50.76	47.73	0.35	0	0

Altran Report
96227-TR-01 Rev. 0
Att/App. A

A	A	B	C	D	E	F	G	H	I	J	K	L	M	N	O
40	5.4	20.40	12.36	2074.87	99.23	22.00	7187.73	16.02	357.45	3.20	53.96	47.37	0.36	0	0
41	5.6	20.75	13.17	2074.52	99.68	22.00	7204.13	16.05	354.25	3.21	57.17	47.02	0.36	0	0
42	5.8	21.10	13.98	2074.16	100.14	22.00	7220.46	16.09	351.04	3.22	60.39	46.66	0.36	0	0
43	6	21.45	14.78	2073.80	100.59	22.00	7236.73	16.12	347.82	3.22	63.61	46.30	0.36	0	0
44	6.2	21.80	15.59	2073.45	101.04	22.00	7252.93	16.16	344.60	3.23	66.85	45.95	0.36	0	0
45	6.4	22.15	16.40	2073.09	101.49	22.00	7269.07	16.20	341.36	3.24	70.09	45.59	0.36	0	0
46	6.6	22.50	17.21	2072.73	101.94	22.00	7285.14	16.23	338.12	3.25	73.33	45.23	0.36	0	0
47	6.8	22.85	18.02	2072.37	102.39	22.00	7301.15	16.27	334.88	3.25	76.59	44.87	0.36	0	0
48	7	23.20	18.83	2072.01	102.83	22.00	7317.09	16.30	331.62	3.26	79.85	44.51	0.36	0	0
49	7.2	23.55	19.64	2071.65	103.28	22.00	7332.97	16.34	328.36	3.27	83.11	44.15	0.36	0	0
50	7.4	23.90	20.44	2071.28	103.73	22.00	7348.79	16.37	325.10	3.27	86.39	43.78	0.36	0	0
51	7.6	24.25	21.25	2070.92	104.17	22.00	7364.55	16.41	321.82	3.28	89.67	43.42	0.36	0	0
52	7.8	24.60	22.06	2070.56	104.62	22.00	7380.25	16.44	318.54	3.29	92.96	43.06	0.36	0	0
53	8	24.95	22.87	2070.19	105.06	22.00	7395.88	16.48	315.25	3.30	96.26	42.69	0.37	0	0
54	8.2	25.30	23.68	2069.83	105.50	22.00	7411.46	16.51	311.95	3.30	99.56	42.33	0.37	0	0
55	8.4	25.65	24.49	2069.46	105.95	22.00	7426.98	16.55	308.65	3.31	102.87	41.96	0.37	0	0
56	8.6	24.75	25.29	2069.09	106.39	22.00	7442.44	16.58	305.34	3.32	106.18	41.59	0.97	0	0
57	8.8	23.91	23.21	2068.12	103.32	22.00	7334.55	16.34	302.03	3.27	109.45	40.62	0.96	0	0
58	9	23.14	21.28	2067.16	100.44	22.00	7231.40	16.11	298.76	3.22	112.68	39.66	0.95	0	0
59	9.2	22.43	19.50	2066.21	97.71	22.00	7132.47	15.89	295.53	3.18	115.85	38.71	0.93	0	0
60	9.4	21.76	17.85	2065.27	95.12	22.00	7037.36	15.68	292.36	3.14	118.99	37.77	0.92	0	0
61	9.6	21.14	16.31	2064.35	92.66	22.00	6945.68	15.48	289.22	3.10	122.09	36.85	0.91	0	0
62	9.8	20.55	14.87	2063.44	90.31	22.00	6857.14	15.28	286.12	3.06	125.14	35.94	0.00	0	0
63	10	20.01	13.52	2063.44	88.97	22.00	6805.88	15.16	283.07	3.03	128.17	35.94	0.00	0	0
64	10.2	19.49	12.26	2063.44	87.70	22.00	6757.22	15.06	280.04	3.01	131.19	35.94	0.00	0	0
65	10.4	19.00	11.06	2063.44	86.50	22.00	6710.95	14.95	277.02	2.99	134.18	35.94	0.00	0	0
66	10.6	18.53	9.93	2063.44	85.37	22.00	6666.89	14.85	274.03	2.97	137.15	35.94	0.00	0	0
67	10.8	18.09	8.85	2063.44	84.30	22.00	6624.87	14.76	271.06	2.95	140.10	35.94	0.00	0	0
68	11	17.67	7.84	2063.44	83.28	22.00	6584.75	14.67	268.11	2.93	143.03	35.94	0.00	0	0
69	11.2	17.27	6.87	2063.44	82.31	22.00	6546.39	14.59	265.18	2.92	145.95	35.94	0.00	0	0
70	11.4	16.89	5.95	2063.44	81.39	22.00	6509.66	14.50	262.26	2.90	148.85	35.94	0.00	0	0
71	11.6	16.53	5.07	2063.44	80.51	22.00	6474.47	14.43	259.36	2.89	151.74	35.94	0.00	0	0
72	11.8	16.19	4.23	2063.44	79.68	22.00	6440.71	14.35	256.47	2.87	154.61	35.94	0.00	0	0
73	12	15.85	3.43	2063.44	78.88	22.00	6408.28	14.28	253.60	2.86	157.46	35.94	0.00	0	0
74	12.2	15.54	2.67	2063.44	78.11	22.00	6377.12	14.21	250.75	2.84	160.30	35.94	0.00	0	0
75	12.4	15.23	1.93	2063.44	77.38	22.00	6347.13	14.14	247.91	2.83	163.13	35.94	0.00	0	0
76	12.6	14.94	1.23	2063.44	76.67	22.00	6318.26	14.08	245.08	2.82	165.95	35.94	0.00	0	0
77	12.8	14.66	0.56	2063.44	76.00	22.00	6290.43	14.02	242.26	2.80	168.75	35.94	0.00	0	0
78	13	14.39	-0.09	2063.44	75.35	22.00	6263.59	13.96	239.46	2.79	171.54	35.94	0.00	0	0

Altran Report
96227-TR-01 Rev. 0
Sh. A15

A	A	B	C	D	E	F	G	H	I	J	K	L	M	N	O
79	13.2	14.13	-0.71	2063.44	74.73	22.00	6237.69	13.90	236.67	2.78	174.32	35.94	0.00	0	0
80	13.4	13.88	-1.31	2063.44	74.13	22.00	6212.66	13.84	233.89	2.77	177.09	35.94	0.00	0	0
81	13.6	13.64	-1.89	2063.44	73.56	22.00	6188.47	13.79	231.12	2.76	179.85	35.94	0.00	0	0
82	13.8	13.41	-2.44	2063.44	73.00	22.00	6165.07	13.74	228.36	2.75	182.60	35.94	0.00	0	0
83	14	13.19	-2.98	2063.44	72.47	22.00	6142.43	13.69	225.61	2.74	185.33	35.94	1.25	0	0
84	14.2	12.97	-3.49	2062.19	70.70	22.00	6067.10	13.52	222.88	2.70	188.04	34.69	1.23	0	0
85	14.4	12.77	-3.99	2060.96	68.97	22.00	5992.46	13.35	220.17	2.67	190.71	33.46	1.22	0	0
86	14.6	12.57	-4.46	2059.74	67.28	22.00	5918.44	13.19	217.50	2.64	193.35	32.24	1.20	0	0
87	14.8	12.38	-4.92	2058.53	65.62	22.00	5845.04	13.02	214.86	2.60	195.95	31.03	1.19	0	0
88	15	12.20	-5.35	2057.35	63.99	22.00	5772.20	12.86	212.26	2.57	198.52	29.85	1.17	0	0
89	15.2	12.03	-5.77	2056.17	62.40	22.00	5699.90	12.70	209.69	2.54	201.06	28.67	1.16	0	0
90	15.4	11.86	-6.17	2055.01	60.84	22.00	5628.12	12.54	207.15	2.51	203.57	27.51	1.15	0	0
91	15.6	11.70	-6.56	2053.87	59.31	22.00	5556.81	12.38	204.64	2.48	206.05	26.37	1.13	0	0
92	15.8	11.54	-6.93	2052.74	57.80	22.00	5485.97	12.22	202.16	2.44	208.49	25.24	1.12	0	0
93	16	11.40	-7.29	2051.62	56.33	22.00	5415.57	12.07	199.72	2.41	210.90	24.12	1.10	0	0
94	16.2	11.25	-7.63	2050.52	54.88	22.00	5345.58	11.91	197.31	2.38	213.29	23.02	1.09	0	0
95	16.4	11.11	-7.96	2049.43	53.46	22.00	5275.99	11.76	194.92	2.35	215.64	21.93	1.07	0	0
96	16.6	10.98	-8.28	2048.36	52.07	22.00	5206.77	11.60	192.57	2.32	217.96	20.86	1.06	0	0
97	16.8	10.85	-8.59	2047.30	50.70	22.00	5137.92	11.45	190.25	2.29	220.25	19.80	1.05	0	0
98	17	10.73	-8.89	2046.25	49.36	22.00	5069.40	11.30	187.96	2.26	222.51	18.75	1.03	0	0
99	17.2	10.61	-9.18	2045.22	48.04	22.00	5001.21	11.14	185.70	2.23	224.74	17.72	1.02	0	0
100	17.4	10.49	-9.46	2044.20	46.75	22.00	4933.34	10.99	183.47	2.20	226.93	16.70	1.00	0	0
101	17.6	10.38	-9.72	2043.20	45.47	22.00	4865.76	10.84	181.28	2.17	229.10	15.70	0.99	0	0
102	17.8	10.27	-9.98	2042.21	44.22	22.00	4798.46	10.69	179.11	2.14	231.24	14.71	0.98	0	0
103	18	10.17	-10.23	2041.23	43.00	22.00	4731.44	10.54	176.97	2.11	233.35	13.73	0.96	0	0
104	18.2	10.06	-10.48	2040.27	41.79	22.00	4664.68	10.39	174.86	2.08	235.43	12.77	0.95	0	0
105	18.4	9.97	-10.71	2039.32	40.61	22.00	4598.17	10.25	172.78	2.05	237.48	11.82	0.94	0	0
106	18.6	9.87	-10.94	2038.38	39.45	22.00	4531.89	10.10	170.73	2.02	239.50	10.88	0.92	0	0
107	18.8	9.78	-11.16	2037.46	38.31	22.00	4465.84	9.95	168.71	1.99	241.49	9.96	0.91	0	0
108	19	9.69	-11.37	2036.55	37.18	22.00	4400.02	9.80	166.72	1.96	243.45	9.05	0.90	0	0
109	19.2	9.60	-11.57	2035.66	36.08	22.00	4334.40	9.66	164.76	1.93	245.38	8.16	0.88	0	0
110	19.4	9.52	-11.77	2034.78	35.00	22.00	4268.98	9.51	162.83	1.90	247.28	7.28	0.87	0	0
111	19.6	9.44	-11.96	2033.91	33.94	22.00	4203.75	9.37	160.93	1.87	249.16	6.41	0.86	0	0
112	19.8	9.36	-12.15	2033.05	32.90	22.00	4138.71	9.22	159.05	1.84	251.00	5.55	0.84	0	0
113	20	9.29	-12.33	2032.21	31.88	22.00	4073.85	9.08	157.21	1.82	252.81	4.71	0.83	0	0
114	20.2	9.21	-12.51	2031.38	30.87	22.00	4009.16	8.93	155.40	1.79	254.60	3.88	0.82	0	0
115	20.4	9.14	-12.68	2030.56	29.89	22.00	3944.63	8.79	153.61	1.76	256.36	3.06	0.80	0	0
116	20.6	9.07	-12.84	2029.76	28.92	22.00	3880.25	8.65	151.85	1.73	258.09	2.26	0.79	0	0
117	20.8	9.00	-13.00	2028.97	27.97	22.00	3816.03	8.50	150.12	1.70	259.79	1.47	0.78	0	0

Altran Report
No. 227-TR-01 Rev. 0

A	A	B	C	D	E	F	G	H	I	J	K	L	M	N	O
118	21	8.94	-13.16	2028.20	27.04	22.00	3751.95	8.36	148.42	1.67	261.46	0.70	0.76	0	0
119	21.2	8.88	-13.31	2027.43	26.12	22.00	3688.01	8.22	146.75	1.64	263.10	-0.07	0.75	0	0
120	21.4	8.81	-13.45	2026.68	25.23	22.00	3624.20	8.08	145.11	1.62	264.72	-0.82	0.00	56.3711	0.0105
121	21.6	8.75	-13.59	2026.68	25.09	22.00	3614.04	8.05	143.49	1.61	266.33	-0.82	0.00	81.2216	0.022
122	21.8	8.70	-13.73	2026.68	24.95	22.00	3604.01	8.03	141.88	1.61	267.94	-0.82	0.00	100.193	0.0337
123	22	8.64	-13.87	2026.68	24.81	22.00	3594.10	8.01	140.27	1.60	269.54	-0.82	0.00	116.21	0.0457
124	22.2	8.58	-14.01	2026.68	24.68	22.00	3584.33	7.99	138.67	1.60	271.14	-0.82	0.00	130.373	0.0579
125	22.4	8.52	-14.14	2026.68	24.54	22.00	3574.67	7.96	137.07	1.59	272.73	-0.82	0.00	143.24	0.0704
126	22.6	8.47	-14.27	2026.68	24.41	22.00	3565.13	7.94	135.48	1.59	274.32	-0.82	0.00	155.141	0.0831
127	22.8	8.41	-14.40	2026.68	24.28	22.00	3555.72	7.92	133.89	1.58	275.90	-0.82	0.00	166.288	0.0961
128	23	8.36	-14.52	2026.68	24.16	22.00	3546.42	7.90	132.31	1.58	277.48	-0.82	0.00	176.83	0.1093
129	23.2	8.30	-14.65	2026.68	24.03	22.00	3537.23	7.88	130.73	1.58	279.06	-0.82	0.00	186.876	0.1229
130	23.4	8.25	-14.77	2026.68	23.91	22.00	3528.15	7.86	129.15	1.57	280.63	-0.82	0.00	196.507	0.1368
131	23.6	8.20	-14.89	2026.68	23.79	22.00	3519.18	7.84	127.58	1.57	282.20	-0.82	0.00	205.788	0.1509
132	23.8	8.15	-15.01	2026.68	23.67	22.00	3510.32	7.82	126.01	1.56	283.76	-0.82	0.00	214.768	0.1654
133	24	8.10	-15.13	2026.68	23.55	22.00	3501.56	7.80	124.45	1.56	285.32	-0.82	0.00	223.491	0.1802
134	24.2	8.05	-15.25	2026.68	23.43	22.00	3492.90	7.78	122.89	1.56	286.88	-0.82	0.00	231.989	0.1954
135	24.4	8.00	-15.36	2026.68	23.32	22.00	3484.34	7.76	121.33	1.55	288.43	-0.82	0.00	240.293	0.2109
136	24.6	7.95	-15.48	2026.68	23.21	22.00	3475.89	7.74	119.78	1.55	289.98	-0.82	0.00	248.428	0.2268
137	24.8	7.90	-15.59	2026.68	23.09	22.00	3467.52	7.73	118.23	1.55	291.53	-0.82	0.00	256.415	0.2431
138	25	7.86	-15.70	2026.68	22.98	22.00	3459.26	7.71	116.68	1.54	293.07	-0.82	0.00	264.273	0.2598
139	25.2	7.81	-15.81	2026.68	22.88	22.00	3451.08	7.69	115.14	1.54	294.61	-0.82	0.00	272.019	0.2769
140	25.4	7.77	-15.91	2026.68	22.77	22.00	3443.00	7.67	113.60	1.53	296.14	-0.82	0.00	279.669	0.2944
141	25.6	7.72	-16.02	2026.68	22.66	22.00	3435.01	7.65	112.07	1.53	297.67	-0.82	0.00	287.235	0.3123
142	25.8	7.68	-16.12	2026.68	22.56	22.00	3427.10	7.64	110.54	1.53	299.20	-0.82	0.00	294.73	0.3307
143	26	7.63	-16.23	2026.68	22.46	22.00	3419.28	7.62	109.01	1.52	300.72	-0.82	0.00	302.165	0.3496
144	26.2	7.59	-16.33	2026.68	22.35	22.00	3411.54	7.60	107.49	1.52	302.24	-0.82	0.00	309.551	0.369
145	26.4	7.55	-16.43	2026.68	22.25	22.00	3403.89	7.58	105.97	1.52	303.76	-0.82	0.00	316.899	0.389
146	26.6	7.50	-16.53	2026.68	22.16	22.00	3396.32	7.57	104.45	1.51	305.27	-0.82	0.00	324.215	0.4094
147	26.8	7.46	-16.62	2026.68	22.06	22.00	3388.83	7.55	102.94	1.51	306.78	-0.82	0.00	331.511	0.4305
148	27	7.42	-16.72	2026.68	21.96	22.00	3381.42	7.53	101.43	1.51	308.29	-0.82	0.00	338.793	0.4521
149	27.2	7.38	-16.82	2026.68	21.87	22.00	3374.08	7.52	99.92	1.50	309.79	-0.82	0.00	346.071	0.4743
150	27.4	7.34	-16.91	2026.68	21.77	22.00	3366.82	7.50	98.42	1.50	311.29	-0.82	0.00	353.35	0.4972
151	27.6	7.30	-17.00	2026.68	21.68	22.00	3359.64	7.49	96.92	1.50	312.79	-0.82	0.00	0	0.5207
152	27.8	7.26	-17.09	2026.68	21.59	22.00	3352.53	7.47	95.42	1.49	314.29	-0.82	0.00	0	0.545
153	28	7.22	-17.18	2026.68	21.50	22.00	3345.49	7.45	93.92	1.49	315.78	-0.82	0.00	0	0.5699
154	28.2	7.18	-17.27	2026.68	21.41	22.00	3338.52	7.44	92.43	1.49	317.26	-0.82	0.00	0	0.5957
155	28.4	7.15	-17.36	2026.68	21.32	22.00	3331.62	7.42	90.95	1.48	318.75	-0.82	0.00	0	0.6222
156	28.6	7.11	-17.45	2026.68	21.23	22.00	3324.79	7.41	89.46	1.48	320.23	-0.82	0.00	0	0.6496

Altran Report
96227-TR-01 Rev. 0
Appendix A Sh. A17

A	A	B	C	D	E	F	G	H	I	J	K	L	M	N	O
157	28.8	7.07	-17.54	2026.68	21.15	22.00	3318.03	7.39	87.98	1.48	321.71	-0.82	0.00	0	0.6778
158	29	7.04	-17.62	2026.68	21.06	22.00	3311.34	7.38	86.50	1.48	323.18	-0.82	0.00	0	0.707
159	29.2	7.00	-17.71	2026.68	20.98	22.00	3304.70	7.36	85.03	1.47	324.66	-0.82	0.00	0	0.7372
160	29.4	6.96	-17.79	2026.68	20.89	22.00	3298.14	7.35	83.55	1.47	326.13	-0.82	0.00	0	0.7684
161	29.6	6.93	-17.87	2026.68	20.81	22.00	3291.63	7.33	82.08	1.47	327.59	-0.82	0.00	0	0.8006
162	29.8	6.89	-17.95	2026.68	20.73	22.00	3285.19	7.32	80.62	1.46	329.06	-0.82	0.00	0	0.834
163	30	6.86	-18.03	2026.68	20.65	22.00	3278.81	7.31	79.15	1.46	330.52	-0.82	0.00	0	0.8686
164	30.2	6.83	-18.11	2026.68	20.57	22.00	3272.49	7.29	77.69	1.46	331.98	-0.82	0.00	0	0.9044
165	30.4	6.79	-18.19	2026.68	20.49	22.00	3266.23	7.28	76.23	1.46	333.43	-0.82	0.00	0	0.9416
166	30.6	6.76	-18.27	2026.68	20.41	22.00	3260.03	7.26	74.78	1.45	334.89	-0.82	0.00	0	0.9802
167	30.8	6.73	-18.35	2026.68	20.34	22.00	3253.88	7.25	73.32	1.45	336.34	-0.82	0.00	0	1.0202
168	31	6.69	-18.42	2026.68	20.26	22.00	3247.80	7.24	71.87	1.45	337.78	-0.82	0.00	0	1.0619
169	31.2	6.66	-18.50	2026.68	20.18	22.00	3241.76	7.22	70.43	1.44	339.23	-0.82	0.00	0	1.1052
170	31.4	6.63	-18.57	2026.68	20.11	22.00	3235.78	7.21	68.98	1.44	340.67	-0.82	0.00	0	1.1503
171	31.6	6.60	-18.64	2026.68	20.04	22.00	3229.86	7.20	67.54	1.44	342.11	-0.82	0.00	0	1.1972
172	31.8	6.57	-18.72	2026.68	19.96	22.00	3223.99	7.18	66.10	1.44	343.55	-0.82	0.00	0	1.2462
173	32	6.54	-18.79	2026.68	19.89	22.00	3218.17	7.17	64.66	1.43	344.98	-0.82	0.00	0	1.2973
174	32.2	6.50	-18.86	2026.68	19.82	22.00	3212.40	7.16	63.23	1.43	346.41	-0.82	0.00	0	1.3507
175	32.4	6.47	-18.93	2026.68	19.75	22.00	3206.69	7.15	61.80	1.43	347.84	-0.82	0.00	0	1.4065
176	32.6	6.44	-19.00	2026.68	19.68	22.00	3201.02	7.13	60.37	1.43	349.27	-0.82	0.00	0	1.465
177	32.8	6.42	-19.07	2026.68	19.61	22.00	3195.40	7.12	58.94	1.42	350.69	-0.82	0.00	0	1.5262
178	33	6.39	-19.14	2026.68	19.54	22.00	3189.84	7.11	57.52	1.42	352.11	-0.82	0.00	0	1.5904
179	33.2	6.36	-19.21	2026.68	19.48	22.00	3184.32	7.10	56.10	1.42	353.53	-0.82	0.00	0	1.6579
180	33.4	6.33	-19.27	2026.68	19.41	22.00	3178.84	7.08	54.68	1.42	354.95	-0.82	0.00	0	1.7289
181	33.6	6.30	-19.34	2026.68	19.34	22.00	3173.42	7.07	53.26	1.41	356.36	-0.82	0.00	0	1.8036
182	33.8	6.27	-19.40	2026.68	19.28	22.00	3168.04	7.06	51.85	1.41	357.77	-0.82	0.00	0	1.8824
183	34	6.24	-19.47	2026.68	19.21	22.00	3162.70	7.05	50.44	1.41	359.18	-0.82	0.00	0	1.9656
184	34.2	6.22	-19.53	2026.68	19.15	22.00	3157.41	7.04	49.03	1.41	360.59	-0.82	0.00	0	2.0536
185	34.4	6.19	-19.60	2026.68	19.08	22.00	3152.16	7.02	47.62	1.40	362.00	-0.82	0.00	0	2.1468
186	34.6	6.16	-19.66	2026.68	19.02	22.00	3146.96	7.01	46.21	1.40	363.40	-0.82	0.00	0	2.2457
187	34.8	6.14	-19.72	2026.68	18.96	22.00	3141.80	7.00	44.81	1.40	364.80	-0.82	0.00	0	2.3509
188	35	6.11	-19.78	2026.68	18.90	22.00	3136.68	6.99	43.41	1.40	366.20	-0.82	0.00	0	2.4629
189	35.2	6.08	-19.85	2026.68	18.84	22.00	3131.61	6.98	42.01	1.40	367.59	-0.82	0.00	0	2.5825
190	35.4	6.06	-19.91	2026.68	18.78	22.00	3126.57	6.97	40.62	1.39	368.98	-0.82	0.00	0	2.7104
191	35.6	6.03	-19.97	2026.68	18.72	22.00	3121.58	6.96	39.23	1.39	370.38	-0.82	0.00	0	2.8475
192	35.8	6.01	-20.03	2026.68	18.66	22.00	3116.62	6.94	37.83	1.39	371.76	-0.82	0.00	0	2.9949
193	36	5.98	-20.08	2026.68	18.60	22.00	3111.71	6.93	36.45	1.39	373.15	-0.82	0.00	0	3.1538
194	36.2	5.96	-20.14	2026.68	18.54	22.00	3106.83	6.92	35.06	1.38	374.54	-0.82	0.00	0	3.3257
195	36.4	5.93	-20.20	2026.68	18.48	22.00	3101.99	6.91	33.67	1.38	375.92	-0.82	0.00	0	3.512

Altran Report
96227-TR-01 Rev. Q
Att./App. A Sh. A18

A	A	B	C	D	E	F	G	H	I	J	K	L	M	N	O
196	36.6	5.91	-20.26	2026.68	18.42	22.00	3097.19	6.90	32.29	1.38	377.30	-0.82	0.00	0	3.7147
197	36.8	5.88	-20.31	2026.68	18.37	22.00	3092.43	6.89	30.91	1.38	378.68	-0.82	0.00	0	3.9362
198	37	5.86	-20.37	2026.68	18.31	22.00	3087.70	6.88	29.53	1.38	380.05	-0.82	0.00	0	4.1792

Altran Report
96227-TR-01 Rev. 0
Att./App. A Sh. A19

```
A:F1:    'W O L F  C R E E K "B"  TRAIN
A:A2:    'LOCA TEMP & SW PRESS
A:A3:    'TIME
A:B3:    'Tcntmt
A:C3:    'Psw
A:D3:    'Psw
A:E3:    'basis
A:F3:    'repressurization curve equations belo
A:A4:    '(sec)
A:B4:    '(F)
A:C4:    '(psia)
A:D4:    '(psig)
A:F4:    'are linear approximations (P=mt + b
A:A5:    0
A:B5:    "---
A:C5:    42
A:D5:    50
A:E5:    'assumed
A:F5:    'm
A:G5:    'b
A:H5:    'from
A:I5:    'to (sec)
A:A6:    1
A:B6:    "---
A:C6:    14.7
A:D6:    (C6-14.7)
A:E6:    'assumed
A:F6:    (C6-C5)/(A6-A5)
A:G6:    (C5-F6*A5)
A:H6:    (A5)
A:I6:    (A6)
A:K6:    'dh
A:L6:    'dV
A:M6:    'dh/dV
```

Altran Report
96227-TR-01 Rev. 0
Att./App. A Sh. A20

A:N6:	'Vdisplaced
A:A7:	2
A:B7:	"---
A:C7:	0
A:D7:	(C7-14.7)
A:E7:	'assumed
A:F7:	(C7-C6)/(A7-A6)
A:G7:	(C6-F7*A6)
A:H7:	(A6)
A:I7:	(A7)
A:K7:	11.5
A:L7:	103.7
A:M7:	(K7/L7)
A:N7:	(L7+N6)
A:A8:	3
A:B8:	208.4
A:C8:	13.7
A:D8:	(C8-14.7)
A:E8:	'SA-90-064
A:F8:	(C8-C7)/(A8-A7)
A:G8:	(C7-F8*A7)
A:H8:	(A7)
A:I8:	(A8)
A:K8:	5.5
A:L8:	18.71
A:M8:	(K8/L8)
A:N8:	(L8+N7)
A:A9:	5
A:B9:	227.1
A:C9:	19.7
A:D9:	(C9-14.7)
A:E9:	"'
A:F9:	(C9-C8)/(A9-A8)
A:G9:	(C8-F9*A8)

A:H9:	(A8)
A:I9:	(A9)
A:K9:	0
A:L9:	61.96
A:M9:	(K9/L9)
A:N9:	(L9+N8)
A:A10:	15
A:B10:	263.2
A:C10:	37.2
A:D10:	(C10-14.7)
A:E10:	""
A:F10:	(C10-C9)/(A10-A9)
A:G10:	(C9-F10*A9)
A:H10:	(A9)
A:I10:	(A10)
A:K10:	36
A:L10:	78.84
A:M10:	(K10/L10)
A:N10:	(L10+N9)
A:A11:	30
A:B11:	269.7
A:C11:	41.8
A:D11:	(C11-14.7)
A:E11:	""
A:F11:	(C11-C10)/(A11-A10)
A:G11:	(C10-F11*A10)
A:H11:	(A10)
A:I11:	(A11)
A:K11:	0
A:L11:	144.8
A:M11:	(K11/L11)
A:N11:	(L11+N10)
A:A12:	35
A:B12:	277.6

Altran Report
96227-TR-01 Rev. 0
Att./App. A Sh. A22

A:C12:	47.6
A:D12:	(C12-14.7)
A:E12:	""
A:F12:	(C12-C11)/(A12-A11)
A:G12:	(C11-F12*A11)
A:H12:	(A11)
A:I12:	(A12)
A:K12:	0
A:L12:	0.1
A:M12:	(K12/L12)
A:N12:	(L12+N11)
A:F13:	'above equations used until heater is draine
A:K13:	0
A:L13:	0.1
A:M13:	(K13/L13)
A:N13:	(L13+N12)
A:F14:	'when heater is drained then P2=P1(V1/v2)^1.1
A:A15:	"d=
A:B15:	13.124
A:C15:	'=inches
A:A16:	"dt=
A:B16:	0.2
A:C16:	'=seconds (time step)
A:A18:	'time
A:B18:	'P
A:C18:	'P
A:D18:	'h1
A:E18:	'P1+h1-1988
A:F18:	'K
A:G18:	'Q
A:H18:	'Q
A:I18:	'Vwtr
A:J18:	'dV in dt
A:K18:	'Vout

Altran Report
96227-TR-01 Rev. 0
Att./App. A Sh. A23

```
A:L18:   'h_el
A:M18:   'dh
A:N18:   'hammer
A:B19:   '(psia)
A:C19:   '(ft-gauge)
A:D19:   '(ft)
A:E19:   '(ft)
A:G19:   '(gpm)
A:H19:   '(ft3/s)
A:I19:   '(ft3)
A:J19:   '(ft3)
A:K19:   '(ft3)
A:L19:   '(ft)
A:M19:   '(ft)
A:N19:   '(psia)
A:B20:   42
A:L20:   @SUM(K7..K13)
A:N20:   'if void<
A:O20:   0.5
A:A21:   0
A:B21:   @IF(L$7<K21,B20*(K20/K21)^1.13,(@IF(A21<A$6,F$6*A21+G$6,@IF(A21<A$7,F$7*A21+G$7,@IF(A21<A$8,F$8*A21+G
         $8,@IF(A21<A$9,F$9*A21+G$9,@IF(A21<A$10,F$10*A21+G$10,@IF(A21<A$11,F$11*A21+G$11,F$12*A21+G$12)))))))
A:C21:   (B20-14.7)*2.31
A:D21:   2080.5
A:E21:   (C21+D21-1988)
A:F21:   22
A:I21:   '
A:O21:   'stm/wtr
A:A22:   1
A:B22:   @IF(L$7<K22,B21*(K21/K22)^1.13,(@IF(A22<A$6,F$6*A22+G$6,@IF(A22<A$7,F$7*A22+G$7,@IF(A22<A$8,F$8*A22+G
         $8,@IF(A22<A$9,F$9*A22+G$9,@IF(A22<A$10,F$10*A22+G$10,@IF(A22<A$11,F$11*A22+G$11,F$12*A22+G$12)))))))
A:C22:   (B21-14.7)*2.31
A:D22:   2080.5
A:E22:   (C22+D22-1988)
```

Altran Report
96227-TR-01 Rev. 0
Att./App. A Sh. A24

```
A:F22:   (F21)
A:A23:   2
A:B23:   @IF(L$7<K23,B22*(K22/K23)^1.13,(@IF(A23<A$6,F$6*A23+G$6,@IF(A23<A$7,F$7*A23+G$7,@IF(A23<A$8,F$8*A23+G
         $8,@IF(A23<A$9,F$9*A23+G$9,@IF(A23<A$10,F$10*A23+G$10,@IF(A23<A$11,F$11*A23+G$11,F$12*A23+G$12))))))))
A:C23:   (B22-14.7)*2.31
A:D23:   2080.5
A:E23:   (C23+D23-1988)
A:F23:   (F22)
A:G23:   (@SQRT(E23/(F23)/0.00259))*((B$15)^2)
A:H23:   (G23/7.48/60)
A:I23:   (N13)
A:J23:   (B16)*(H23)
A:K23:   (K20)+(J23)
A:L23:   (L20)
A:M23:   @IF(K23<N$7,J23*M$7,@IF(K23<N$8,J23*M$8,@IF(K23<N$9,J23*M$9,@IF(K23<N$10,J23*M$10,@IF(K23<N$11,J23*M
         11,@IF(K23<N$12,J23*M$12,J23*M$13))))))
A:N23:   @IF(M23=0#AND#K23>N$10#AND#K23<N$11#AND#(K23-N$10)/(N$11-K23)<O$20,0.707*2300*@SQRT(B23*60*(K23-N
         $10)/(N$11-K23)/32.2/144),0)
A:O23:   @IF(M23=0#AND#K23>N$10#AND#K23<N$11,(K23-N$10)/(N$11-K23),0
A:A24:   (A23+B$16)
A:B24:   @IF(L$7<K24,B23*(K23/K24)^1.13,(@IF(A24<A$6,F$6*A24+G$6,@IF(A24<A$7,F$7*A24+G$7,@IF(A24<A$8,F$8*A24+G
         $8,@IF(A24<A$9,F$9*A24+G$9,@IF(A24<A$10,F$10*A24+G$10,@IF(A24<A$11,F$11*A24+G$11,F$12*A24+G$12))))))))
A:C24:   (B23-14.7)*2.31
A:D24:   (D23-M23)
A:E24:   (C24+D24-1988)
A:F24:   (F23)
A:G24:   (@SQRT(E24/(F24)/0.00259))*((B$15)^2)
A:H24:   (G24/7.48/60)
A:I24:   (I23-J23)
A:J24:   (B$16)*(H24)
A:K24:   (K23)+(J24)
A:L24:   (L23-M23)
A:M24:   @IF(K24<N$7,J24*M$7,@IF(K24<N$8,J24*M$8,@IF(K24<N$9,J24*M$9,@IF(K24<N$10,J24*M$10,@IF(K24<N$11,J24*M
         11,@IF(K24<N$12,J24*M$12,J24*M$13))))))
```

Altran Report
96227-TR-01 Rev. 0
Att./App. A Sh. A 25

A:N24: @IF(M24=0#AND#K24>N$10#AND#K24<N$11#AND#(K24-N$10)/(N$11-K24)<O$20,0.707*2300*@SQRT(B24*60*(K24-N$10)/(N$11-K24)/32.2/144),0)

A:O24: @IF(M24=0#AND#K24>N$10#AND#K24<N$11,(K24-N$10)/(N$11-K24),0

A:A25: (A24+B$16)

A:B25: @IF(L$7<K25,B24*(K24/K25)^1.13,(@IF(A25<A$6,F$6*A25+G$6,@IF(A25<A$7,F$7*A25+G$7,@IF(A25<A$8,F$8*A25+G$8,@IF(A25<A$9,F$9*A25+G$9,@IF(A25<A$10,F$10*A25+G$10,@IF(A25<A$11,F$11*A25+G$11,F$12*A25+G$12))))))))

A:C25: (B24-14.7)*2.31

A:D25: (D24-M24)

A:E25: (C25+D25-1988)

A:F25: (F24)

A:G25: (@SQRT(E25/(F25)/0.00259))*((B$15)^2)

A:H25: (G25/7.48/60)

A:I25: (I24-J24)

A:J25: (B$16)*(H25)

A:K25: (K24)+(J25)

A:L25: (L24-M24)

A:M25: @IF(K25<N$7,J25*M$7,@IF(K25<N$8,J25*M$8,@IF(K25<N$9,J25*M$9,@IF(K25<N$10,J25*M$10,@IF(K25<N$11,J25*M11,@IF(K25<N$12,J25*M$12,J25*M$13))))))

A:N25: @IF(M25=0#AND#K25>N$10#AND#K25<N$11#AND#(K25-N$10)/(N$11-K25)<O$20,0.707*2300*@SQRT(B25*60*(K25-N$10)/(N$11-K25)/32.2/144),0)

A:O25: @IF(M25=0#AND#K25>N$10#AND#K25<N$11,(K25-N$10)/(N$11-K25),0

Altran Report
96227-TR-01 Rev. 0
Att./App. A Sh. A26

A	A	B	C	D	E	F	G	H	I	J	K	L	M	N	O
1						WOLF CREEK "B" TRAIN									
2	LOCA TEMP & SW PRESS														
3	TIME	Tcntmt	Psw	Psw	basis	repressurization curve equations below									
4	(sec)	(F)	(psia)	(psig)		are linear approximations (P=mt + b)									
5	0	---	42	50	assumed	m	b	from	to (sec)						
6	1	---	14.7	0	assumed	-27.3	42	0	1		dh	dV	dh/dV	Vdisplaced	
7	2	---	0	-14.7	assumed	-14.7	29.4	1	2		11.5	103.7	0.111	103.7	
8	3	208.4	13.7	-1	SA-90-064	13.7	-27.4	2	3		5.5	18.71	0.294	122.41	
9	5	227.1	19.7	5	"	3	4.7	3	5		0	61.96	0	184.37	
10	15	263.2	37.2	22.5	"	1.75	10.95	5	15		36	78.84	0.457	263.21	
11	30	269.7	41.8	27.1	"	0.307	32.6	15	30		0	144.8	0	408.01	
12	35	277.6	47.6	32.9	"	1.16	7	30	35		0	0.1	0	408.11	
13						above equations used until heater is drained					0	0.1	0	408.21	
14						when heater is drained then P2=P1(V1/v2)^1.13									
15	d=	13.124	=inches												
16	dt=	0.2	=seconds (time step)												
17															
18	time	P	P	h1	P1+h1-1988	K	Q	Q	Vwtr	dV in dt	Vout	h_el	dh	hammer	
19		(psia)	(ft-gauge)	(ft)	(ft)		(gpm)	(ft3/s)	(ft3)	(ft3)	(ft3)	(ft)	(ft)	(psia)	
20		42										53		if void<	0.5
21	0	42.00	63.06	2080.50	155.56	27.00									stm/wtr
22	1	14.70	63.06	2080.50	155.56	27.00									
23	2	0.00	0.00	2080.50	92.50	27.00	6264.29	13.96	408.21	2.79	2.79	53.00	0.31	0	0
24	2.2	2.74	-33.96	2080.19	58.23	27.00	4970.35	11.07	405.42	2.21	5.01	52.69	0.25	0	0
25	2.4	5.48	-27.63	2079.94	64.32	27.00	5223.53	11.64	403.20	2.33	7.33	52.44	0.26	0	0
26	2.6	8.22	-21.30	2079.69	70.39	27.00	5464.51	12.18	400.88	2.44	9.77	52.19	0.27	0	0
27	2.8	10.96	-14.97	2079.42	76.45	27.00	5694.86	12.69	398.44	2.54	12.31	51.92	0.28	0	0
28	3	13.70	-8.64	2079.14	82.50	27.00	5915.84	13.18	395.90	2.64	14.94	51.64	0.29	0	0
29	3.2	14.30	-2.31	2078.84	88.53	27.00	6128.48	13.66	393.27	2.73	17.67	51.34	0.30	0	0
30	3.4	14.90	-0.92	2078.54	89.62	27.00	6165.86	13.74	390.54	2.75	20.42	51.04	0.30	0	0
31	3.6	15.50	0.46	2078.24	90.70	27.00	6202.94	13.82	387.79	2.76	23.19	50.74	0.31	0	0
32	3.8	16.10	1.85	2077.93	91.78	27.00	6239.75	13.90	385.02	2.78	25.97	50.43	0.31	0	0
33	4	16.70	3.23	2077.62	92.85	27.00	6276.27	13.98	382.24	2.80	28.76	50.12	0.31	0	0
34	4.2	17.30	4.62	2077.31	93.93	27.00	6312.53	14.07	379.45	2.81	31.58	49.81	0.31	0	0
35	4.4	17.90	6.01	2077.00	95.00	27.00	6348.51	14.15	376.63	2.83	34.41	49.50	0.31	0	0
36	4.6	18.50	7.39	2076.68	96.08	27.00	6384.24	14.23	373.80	2.85	37.25	49.18	0.32	0	0
37	4.8	19.10	8.78	2076.37	97.15	27.00	6419.71	14.30	370.96	2.86	40.11	48.87	0.32	0	0
38	5	19.70	10.16	2076.05	98.22	27.00	6454.92	14.38	368.10	2.88	42.99	48.55	0.32	0	0
39	5.2	20.05	11.55	2075.73	99.28	27.00	6489.89	14.46	365.22	2.89	45.88	48.23	0.32	0	0

Altran Report
96227-TR-01 Rev. 0
Att./App. A Sh. A27

A	A	B	C	D	E	F	G	H	I	J	K	L	M	N	O
40	5.4	20.40	12.36	2075.41	99.77	27.00	6505.81	14.50	362.33	2.90	48.78	47.91	0.32	0	0
41	5.6	20.75	13.17	2075.09	100.26	27.00	6521.67	14.53	359.43	2.91	51.69	47.59	0.32	0	0
42	5.8	21.10	13.98	2074.77	100.74	27.00	6537.47	14.57	356.52	2.91	54.60	47.27	0.32	0	0
43	6	21.45	14.78	2074.45	101.23	27.00	6553.20	14.60	353.61	2.92	57.52	46.95	0.32	0	0
44	6.2	21.80	15.59	2074.12	101.71	27.00	6568.87	14.64	350.69	2.93	60.45	46.62	0.32	0	0
45	6.4	22.15	16.40	2073.80	102.20	27.00	6584.47	14.67	347.76	2.93	63.38	46.30	0.33	0	0
46	6.6	22.50	17.21	2073.47	102.68	27.00	6600.02	14.71	344.83	2.94	66.32	45.97	0.33	0	0
47	6.8	22.85	18.02	2073.15	103.16	27.00	6615.50	14.74	341.89	2.95	69.27	45.65	0.33	0	0
48	7	23.20	18.83	2072.82	103.64	27.00	6630.92	14.77	338.94	2.95	72.23	45.32	0.33	0	0
49	7.2	23.55	19.64	2072.49	104.13	27.00	6646.29	14.81	335.98	2.96	75.19	44.99	0.33	0	0
50	7.4	23.90	20.44	2072.16	104.61	27.00	6661.59	14.84	333.02	2.97	78.16	44.66	0.33	0	0
51	7.6	24.25	21.25	2071.83	105.08	27.00	6676.83	14.88	330.05	2.98	81.13	44.33	0.33	0	0
52	7.8	24.60	22.06	2071.50	105.56	27.00	6692.02	14.91	327.08	2.98	84.11	44.00	0.33	0	0
53	8	24.95	22.87	2071.17	106.04	27.00	6707.15	14.94	324.10	2.99	87.10	43.67	0.33	0	0
54	8.2	25.30	23.68	2070.84	106.52	27.00	6722.21	14.98	321.11	3.00	90.10	43.34	0.33	0	0
55	8.4	25.65	24.49	2070.51	106.99	27.00	6737.23	15.01	318.11	3.00	93.10	43.01	0.33	0	0
56	8.6	26.00	25.29	2070.18	107.47	27.00	6752.18	15.04	315.11	3.01	96.11	42.68	0.33	0	0
57	8.8	26.35	26.10	2069.84	107.94	27.00	6767.08	15.08	312.10	3.02	99.13	42.34	0.33	0	0
58	9	26.70	26.91	2069.51	108.42	27.00	6781.93	15.11	309.08	3.02	102.15	42.01	0.34	0	0
59	9.2	25.83	27.72	2069.17	108.89	27.00	6796.71	15.14	306.06	3.03	105.18	41.67	0.89	0	0
60	9.4	25.03	25.72	2068.28	106.00	27.00	6705.80	14.94	303.03	2.99	108.16	40.78	0.88	0	0
61	9.6	24.28	23.86	2067.40	103.26	27.00	6618.63	14.75	300.05	2.95	111.11	39.90	0.87	0	0
62	9.8	23.58	22.13	2066.54	100.66	27.00	6534.83	14.56	297.10	2.91	114.03	39.04	0.86	0	0
63	10	22.92	20.51	2065.68	98.19	27.00	6454.10	14.38	294.18	2.88	116.90	38.18	0.85	0	0
64	10.2	22.31	19.00	2064.83	95.83	27.00	6376.15	14.21	291.31	2.84	119.74	37.33	0.84	0	0
65	10.4	21.73	17.58	2064.00	93.58	27.00	6300.75	14.04	288.47	2.81	122.55	36.50	0.00	0	0
66	10.6	21.19	16.25	2064.00	92.25	27.00	6255.74	13.94	285.66	2.79	125.34	36.50	0.00	0	0
67	10.8	20.67	14.99	2064.00	90.99	27.00	6212.87	13.84	282.87	2.77	128.11	36.50	0.00	0	0
68	11	20.18	13.79	2064.00	89.79	27.00	6171.99	13.75	280.10	2.75	130.86	36.50	0.00	0	0
69	11.2	19.72	12.66	2064.00	88.66	27.00	6132.94	13.67	277.35	2.73	133.59	36.50	0.00	0	0
70	11.4	19.27	11.59	2064.00	87.59	27.00	6095.60	13.58	274.62	2.72	136.31	36.50	0.00	0	0
71	11.6	18.85	10.56	2064.00	86.56	27.00	6059.85	13.50	271.90	2.70	139.01	36.50	0.00	0	0
72	11.8	18.45	9.59	2064.00	85.59	27.00	6025.59	13.43	269.20	2.69	141.69	36.50	0.00	0	0
73	12	18.06	8.65	2064.00	84.65	27.00	5992.72	13.35	266.52	2.67	144.36	36.50	0.00	0	0
74	12.2	17.69	7.76	2064.00	83.76	27.00	5961.15	13.28	263.85	2.66	147.02	36.50	0.00	0	0
75	12.4	17.34	6.91	2064.00	82.91	27.00	5930.79	13.21	261.19	2.64	149.66	36.50	0.00	0	0
76	12.6	17.00	6.10	2064.00	82.10	27.00	5901.59	13.15	258.55	2.63	152.29	36.50	0.00	0	0
77	12.8	16.68	5.32	2064.00	81.32	27.00	5873.46	13.09	255.92	2.62	154.91	36.50	0.00	0	0
78	13	16.37	4.57	2064.00	80.57	27.00	5846.34	13.03	253.30	2.61	157.52	36.50	0.00	0	0

A	A	B	C	D	E	F	G	H	I	J	K	L	M	N	O
79	13.2	16.07	3.85	2064.00	79.85	27.00	5820.19	12.97	250.69	2.59	160.11	36.50	0.00	0	0
80	13.4	15.78	3.16	2064.00	79.16	27.00	5794.94	12.91	248.10	2.58	162.69	36.50	0.00	0	0
81	13.6	15.50	2.49	2064.00	78.49	27.00	5770.54	12.86	245.52	2.57	165.26	36.50	0.00	0	0
82	13.8	15.24	1.85	2064.00	77.85	27.00	5746.96	12.81	242.95	2.56	167.82	36.50	0.00	0	0
83	14	14.98	1.24	2064.00	77.24	27.00	5724.15	12.75	240.39	2.55	170.38	36.50	0.00	0	0
84	14.2	14.73	0.64	2064.00	76.64	27.00	5702.06	12.71	237.83	2.54	172.92	36.50	0.00	0	0
85	14.4	14.49	0.07	2064.00	76.07	27.00	5680.67	12.66	235.29	2.53	175.45	36.50	0.00	0	0
86	14.6	14.26	-0.49	2064.00	75.51	27.00	5659.94	12.61	232.76	2.52	177.97	36.50	0.00	0	0
87	14.8	14.03	-1.02	2064.00	74.98	27.00	5639.83	12.57	230.24	2.51	180.48	36.50	0.00	0	0
88	15	13.82	-1.54	2064.00	74.46	27.00	5620.32	12.52	227.73	2.50	182.99	36.50	0.00	0	0
89	15.2	13.61	-2.04	2064.00	73.96	27.00	5601.39	12.48	225.22	2.50	185.48	36.50	1.14	0	0
90	15.4	13.40	-2.53	2062.86	72.33	27.00	5539.52	12.34	222.73	2.47	187.95	35.36	1.13	0	0
91	15.6	13.21	-2.99	2061.73	70.74	27.00	5478.17	12.21	220.26	2.44	190.39	34.23	1.11	0	0
92	15.8	13.02	-3.44	2060.62	69.18	27.00	5417.31	12.07	217.82	2.41	192.81	33.12	1.10	0	0
93	16	12.84	-3.87	2059.52	67.64	27.00	5356.92	11.94	215.40	2.39	195.20	32.02	1.09	0	0
94	16.2	12.67	-4.29	2058.43	66.14	27.00	5296.97	11.80	213.01	2.36	197.56	30.93	1.08	0	0
95	16.4	12.50	-4.69	2057.35	64.66	27.00	5237.45	11.67	210.65	2.33	199.89	29.85	1.07	0	0
96	16.6	12.34	-5.07	2056.28	63.21	27.00	5178.32	11.54	208.32	2.31	202.20	28.78	1.05	0	0
97	16.8	12.19	-5.45	2055.23	61.78	27.00	5119.58	11.41	206.01	2.28	204.48	27.73	1.04	0	0
98	17	12.04	-5.80	2054.19	60.38	27.00	5061.20	11.28	203.73	2.26	206.73	26.69	1.03	0	0
99	17.2	11.89	-6.15	2053.16	59.01	27.00	5003.17	11.15	201.48	2.23	208.96	25.66	1.02	0	0
100	17.4	11.75	-6.49	2052.14	57.65	27.00	4945.47	11.02	199.25	2.20	211.17	24.64	1.01	0	0
101	17.6	11.62	-6.81	2051.13	56.32	27.00	4888.09	10.89	197.04	2.18	213.35	23.63	0.99	0	0
102	17.8	11.49	-7.12	2050.14	55.01	27.00	4831.02	10.76	194.86	2.15	215.50	22.64	0.98	0	0
103	18	11.36	-7.43	2049.15	53.73	27.00	4774.23	10.64	192.71	2.13	217.63	21.65	0.97	0	0
104	18.2	11.24	-7.72	2048.18	52.46	27.00	4717.72	10.51	190.58	2.10	219.73	20.68	0.96	0	0
105	18.4	11.12	-8.00	2047.22	51.22	27.00	4661.47	10.39	188.48	2.08	221.81	19.72	0.95	0	0
106	18.6	11.00	-8.28	2046.27	50.00	27.00	4605.48	10.26	186.40	2.05	223.86	18.77	0.94	0	0
107	18.8	10.89	-8.54	2045.34	48.79	27.00	4549.74	10.14	184.35	2.03	225.89	17.84	0.93	0	0
108	19	10.78	-8.80	2044.41	47.61	27.00	4494.23	10.01	182.32	2.00	227.89	16.91	0.91	0	0
109	19.2	10.68	-9.05	2043.50	46.45	27.00	4438.94	9.89	180.32	1.98	229.87	16.00	0.90	0	0
110	19.4	10.58	-9.29	2042.59	45.30	27.00	4383.87	9.77	178.34	1.95	231.82	15.09	0.89	0	0
111	19.6	10.48	-9.53	2041.70	44.17	27.00	4329.00	9.65	176.39	1.93	233.75	14.20	0.88	0	0
112	19.8	10.38	-9.75	2040.82	43.07	27.00	4274.34	9.52	174.46	1.90	235.65	13.32	0.87	0	0
113	20	10.29	-9.98	2039.95	41.98	27.00	4219.87	9.40	172.56	1.88	237.54	12.45	0.86	0	0
114	20.2	10.20	-10.19	2039.09	40.90	27.00	4165.58	9.28	170.67	1.86	239.39	11.59	0.85	0	0
115	20.4	10.11	-10.40	2038.24	39.85	27.00	4111.46	9.16	168.82	1.83	241.22	10.74	0.84	0	0
116	20.6	10.03	-10.60	2037.41	38.81	27.00	4057.52	9.04	166.99	1.81	243.03	9.91	0.83	0	0
117	20.8	9.94	-10.80	2036.58	37.79	27.00	4003.74	8.92	165.18	1.78	244.82	9.08	0.81	0	0

Altran Report
96227-TR-01 Rev. 0
A 29

A	A	B	C	D	E	F	G	H	I	J	K	L	M	N	O
118	21	9.86	-10.99	2035.77	36.78	27.00	3950.12	8.80	163.39	1.76	246.58	8.27	0.80	0	0
119	21.2	9.79	-11.17	2034.96	35.79	27.00	3896.65	8.68	161.63	1.74	248.31	7.46	0.79	0	0
120	21.4	9.71	-11.35	2034.17	34.82	27.00	3843.33	8.56	159.90	1.71	250.03	6.67	0.78	0	0
121	21.6	9.64	-11.53	2033.39	33.86	27.00	3790.14	8.45	158.18	1.69	251.71	5.89	0.77	0	0
122	21.8	9.56	-11.70	2032.62	32.92	27.00	3737.10	8.33	156.50	1.67	253.38	5.12	0.76	0	0
123	22	9.50	-11.86	2031.86	31.99	27.00	3684.18	8.21	154.83	1.64	255.02	4.36	0.75	0	0
124	22.2	9.43	-12.02	2031.11	31.08	27.00	3631.39	8.09	153.19	1.62	256.64	3.61	0.74	0	0
125	22.4	9.36	-12.18	2030.37	30.19	27.00	3578.72	7.97	151.57	1.59	258.24	2.87	0.73	0	0
126	22.6	9.30	-12.33	2029.64	29.31	27.00	3526.17	7.86	149.97	1.57	259.81	2.14	0.72	0	0
127	22.8	9.24	-12.48	2028.92	28.44	27.00	3473.73	7.74	148.40	1.55	261.35	1.42	0.71	0	0
128	23	9.18	-12.62	2028.22	27.59	27.00	3421.40	7.62	146.86	1.52	262.88	0.72	0.70	0	0
129	23.2	9.12	-12.76	2027.52	26.76	27.00	3369.17	7.51	145.33	1.50	264.38	0.02	0.00	50.4193	0.0081
130	23.4	9.06	-12.90	2027.52	26.62	27.00	3360.60	7.49	143.83	1.50	265.88	0.02	0.00	76.2775	0.0188
131	23.6	9.00	-13.03	2027.52	26.49	27.00	3352.13	7.47	142.33	1.49	267.37	0.02	0.00	95.4685	0.0296
132	23.8	8.94	-13.16	2027.52	26.36	27.00	3343.76	7.45	140.84	1.49	268.86	0.02	0.00	111.497	0.0406
133	24	8.89	-13.29	2027.52	26.23	27.00	3335.50	7.43	139.35	1.49	270.35	0.02	0.00	125.586	0.0519
134	24.2	8.83	-13.42	2027.52	26.10	27.00	3327.33	7.41	137.86	1.48	271.83	0.02	0.00	138.335	0.0633
135	24.4	8.78	-13.55	2027.52	25.97	27.00	3319.25	7.40	136.38	1.48	273.31	0.02	0.00	150.092	0.075
136	24.6	8.73	-13.67	2027.52	25.85	27.00	3311.27	7.38	134.90	1.48	274.79	0.02	0.00	161.079	0.0869
137	24.8	8.67	-13.80	2027.52	25.72	27.00	3303.38	7.36	133.42	1.47	276.26	0.02	0.00	171.449	0.099
138	25	8.62	-13.92	2027.52	25.60	27.00	3295.58	7.34	131.95	1.47	277.73	0.02	0.00	181.313	0.1114
139	25.2	8.57	-14.04	2027.52	25.48	27.00	3287.86	7.33	130.48	1.47	279.19	0.02	0.00	190.754	0.1241
140	25.4	8.52	-14.16	2027.52	25.36	27.00	3280.24	7.31	129.02	1.46	280.65	0.02	0.00	199.837	0.137
141	25.6	8.47	-14.27	2027.52	25.25	27.00	3272.69	7.29	127.56	1.46	282.11	0.02	0.00	208.612	0.1501
142	25.8	8.42	-14.39	2027.52	25.13	27.00	3265.23	7.28	126.10	1.46	283.57	0.02	0.00	217.123	0.1636
143	26	8.37	-14.50	2027.52	25.02	27.00	3257.86	7.26	124.64	1.45	285.02	0.02	0.00	225.403	0.1773
144	26.2	8.33	-14.61	2027.52	24.91	27.00	3250.56	7.24	123.19	1.45	286.47	0.02	0.00	233.482	0.1914
145	26.4	8.28	-14.72	2027.52	24.80	27.00	3243.34	7.23	121.74	1.45	287.91	0.02	0.00	241.384	0.2057
146	26.6	8.23	-14.83	2027.52	24.69	27.00	3236.20	7.21	120.30	1.44	289.36	0.02	0.00	249.13	0.2203
147	26.8	8.19	-14.94	2027.52	24.58	27.00	3229.14	7.20	118.85	1.44	290.79	0.02	0.00	256.74	0.2353
148	27	8.14	-15.05	2027.52	24.47	27.00	3222.15	7.18	117.42	1.44	292.23	0.02	0.00	264.229	0.2506
149	27.2	8.10	-15.15	2027.52	24.37	27.00	3215.23	7.16	115.98	1.43	293.66	0.02	0.00	271.612	0.2663
150	27.4	8.05	-15.26	2027.52	24.26	27.00	3208.38	7.15	114.55	1.43	295.09	0.02	0.00	278.902	0.2824
151	27.6	8.01	-15.36	2027.52	24.16	27.00	3201.61	7.13	113.12	1.43	296.52	0.02	0.00	286.112	0.2988
152	27.8	7.96	-15.46	2027.52	24.06	27.00	3194.90	7.12	111.69	1.42	297.94	0.02	0.00	293.252	0.3156
153	28	7.92	-15.56	2027.52	23.96	27.00	3188.27	7.10	110.27	1.42	299.36	0.02	0.00	300.331	0.3328
154	28.2	7.88	-15.66	2027.52	23.86	27.00	3181.70	7.09	108.85	1.42	300.78	0.02	0.00	307.359	0.3504
155	28.4	7.84	-15.75	2027.52	23.77	27.00	3175.19	7.07	107.43	1.41	302.20	0.02	0.00	314.345	0.3684
156	28.6	7.80	-15.85	2027.52	23.67	27.00	3168.76	7.06	106.01	1.41	303.61	0.02	0.00	321.297	0.387

A	A	B	C	D	E	F	G	H	I	J	K	L	M	N	O
157	28.8	7.76	-15.95	2027.52	23.57	27.00	3162.38	7.05	104.60	1.41	305.02	0.02	0.00	328.222	0.4059
158	29	7.72	-16.04	2027.52	23.48	27.00	3156.07	7.03	103.19	1.41	306.42	0.02	0.00	335.127	0.4254
159	29.2	7.68	-16.13	2027.52	23.39	27.00	3149.82	7.02	101.79	1.40	307.83	0.02	0.00	342.019	0.4454
160	29.4	7.64	-16.22	2027.52	23.29	27.00	3143.63	7.00	100.38	1.40	309.23	0.02	0.00	348.905	0.4659
161	29.6	7.60	-16.32	2027.52	23.20	27.00	3137.50	6.99	98.98	1.40	310.63	0.02	0.00	355.791	0.4869
162	29.8	7.56	-16.41	2027.52	23.11	27.00	3131.43	6.98	97.58	1.40	312.02	0.02	0.00	0	0.5085
163	30	7.52	-16.49	2027.52	23.03	27.00	3125.42	6.96	96.19	1.39	313.42	0.02	0.00	0	0.5307
164	30.2	7.48	-16.58	2027.52	22.94	27.00	3119.46	6.95	94.79	1.39	314.81	0.02	0.00	0	0.5536
165	30.4	7.45	-16.67	2027.52	22.85	27.00	3113.56	6.94	93.40	1.39	316.19	0.02	0.00	0	0.5771
166	30.6	7.41	-16.75	2027.52	22.77	27.00	3107.72	6.92	92.02	1.38	317.58	0.02	0.00	0	0.6012
167	30.8	7.37	-16.84	2027.52	22.68	27.00	3101.93	6.91	90.63	1.38	318.96	0.02	0.00	0	0.6261
168	31	7.34	-16.92	2027.52	22.60	27.00	3096.19	6.90	89.25	1.38	320.34	0.02	0.00	0	0.6517
169	31.2	7.30	-17.01	2027.52	22.51	27.00	3090.51	6.89	87.87	1.38	321.72	0.02	0.00	0	0.678
170	31.4	7.27	-17.09	2027.52	22.43	27.00	3084.88	6.87	86.49	1.37	323.09	0.02	0.00	0	0.7052
171	31.6	7.23	-17.17	2027.52	22.35	27.00	3079.30	6.86	85.12	1.37	324.46	0.02	0.00	0	0.7332
172	31.8	7.20	-17.25	2027.52	22.27	27.00	3073.77	6.85	83.75	1.37	325.83	0.02	0.00	0	0.7621
173	32	7.16	-17.33	2027.52	22.19	27.00	3068.29	6.84	82.38	1.37	327.20	0.02	0.00	0	0.7919
174	32.2	7.13	-17.41	2027.52	22.11	27.00	3062.86	6.82	81.01	1.36	328.57	0.02	0.00	0	0.8227
175	32.4	7.10	-17.48	2027.52	22.04	27.00	3057.47	6.81	79.64	1.36	329.93	0.02	0.00	0	0.8545
176	32.6	7.06	-17.56	2027.52	21.96	27.00	3052.14	6.80	78.28	1.36	331.29	0.02	0.00	0	0.8874
177	32.8	7.03	-17.64	2027.52	21.88	27.00	3046.85	6.79	76.92	1.36	332.65	0.02	0.00	0	0.9214
178	33	7.00	-17.71	2027.52	21.81	27.00	3041.60	6.78	75.56	1.36	334.00	0.02	0.00	0	0.9565
179	33.2	6.97	-17.79	2027.52	21.73	27.00	3036.41	6.77	74.21	1.35	335.36	0.02	0.00	0	0.993
180	33.4	6.94	-17.86	2027.52	21.66	27.00	3031.25	6.75	72.85	1.35	336.71	0.02	0.00	0	1.0307
181	33.6	6.91	-17.93	2027.52	21.59	27.00	3026.14	6.74	71.50	1.35	338.05	0.02	0.00	0	1.0699
182	33.8	6.87	-18.01	2027.52	21.51	27.00	3021.08	6.73	70.16	1.35	339.40	0.02	0.00	0	1.1105
183	34	6.84	-18.08	2027.52	21.44	27.00	3016.05	6.72	68.81	1.34	340.74	0.02	0.00	0	1.1527
184	34.2	6.81	-18.15	2027.52	21.37	27.00	3011.07	6.71	67.47	1.34	342.09	0.02	0.00	0	1.1965
185	34.4	6.78	-18.22	2027.52	21.30	27.00	3006.13	6.70	66.12	1.34	343.43	0.02	0.00	0	1.2421
186	34.6	6.75	-18.29	2027.52	21.23	27.00	3001.24	6.69	64.78	1.34	344.76	0.02	0.00	0	1.2895
187	34.8	6.72	-18.36	2027.52	21.16	27.00	2996.38	6.68	63.45	1.34	346.10	0.02	0.00	0	1.3388
188	35	6.70	-18.42	2027.52	21.10	27.00	2991.56	6.67	62.11	1.33	347.43	0.02	0.00	0	1.3903
189	35.2	6.67	-18.49	2027.52	21.03	27.00	2986.78	6.66	60.78	1.33	348.76	0.02	0.00	0	1.444
190	35.4	6.64	-18.56	2027.52	20.96	27.00	2982.04	6.64	59.45	1.33	350.09	0.02	0.00	0	1.5001
191	35.6	6.61	-18.62	2027.52	20.90	27.00	2977.34	6.63	58.12	1.33	351.42	0.02	0.00	0	1.5587
192	35.8	6.58	-18.69	2027.52	20.83	27.00	2972.68	6.62	56.79	1.32	352.74	0.02	0.00	0	1.62
193	36	6.55	-18.75	2027.52	20.77	27.00	2968.05	6.61	55.47	1.32	354.07	0.02	0.00	0	1.6843
194	36.2	6.53	-18.82	2027.52	20.70	27.00	2963.47	6.60	54.14	1.32	355.39	0.02	0.00	0	1.7517
195	36.4	6.50	-18.88	2027.52	20.64	27.00	2958.91	6.59	52.82	1.32	356.71	0.02	0.00	0	1.8224

A	A	B	C	D	E	F	G	H	I	J	K	L	M	N	O
196	36.6	6.47	-18.94	2027.52	20.57	27.00	2954.40	6.58	51.50	1.32	358.02	0.02	0.00	0	1.8967
197	36.8	6.44	-19.01	2027.52	20.51	27.00	2949.92	6.57	50.19	1.31	359.34	0.02	0.00	0	1.9749
198	37	6.42	-19.07	2027.52	20.45	27.00	2945.47	6.56	48.87	1.31	360.65	0.02	0.00	0	2.0574

Altran Report
96227-TR-01 Rev. 0
Att./App. A Sh. A32

A:F1:	'W O L F C R E E K "B" TRAIN
A:A2:	'LOCA TEMP & SW PRESS
A:A3:	'TIME
A:B3:	'Tcntmt
A:C3:	'Psw
A:D3:	'Psw
A:E3:	'basis
A:F3:	'repressurization curve equations belo
A:A4:	'(sec)
A:B4:	'(F)
A:C4:	'(psia)
A:D4:	'(psig)
A:F4:	'are linear approximations (P=mt + b
A:A5:	0
A:B5:	"---
A:C5:	42
A:D5:	50
A:E5:	'assumed
A:F5:	'm
A:G5:	'b
A:H5:	'from
A:I5:	'to (sec)
A:A6:	1
A:B6:	"---
A:C6:	14.7
A:D6:	(C6-14.7)
A:E6:	'assumed
A:F6:	(C6-C5)/(A6-A5)
A:G6:	(C5-F6*A5)
A:H6:	(A5)
A:I6:	(A6)
A:K6:	'dh
A:L6:	'dV
A:M6:	'dh/dV

Altran Report
96227-TR-01 Rev. 0
Att./App. A Pg. A22

A:N6:	'Vdisplaced
A:A7:	2
A:B7:	"---
A:C7:	0
A:D7:	(C7-14.7)
A:E7:	'assumed
A:F7:	(C7-C6)/(A7-A6)
A:G7:	(C6-F7*A6)
A:H7:	(A6)
A:I7:	(A7)
A:K7:	11.5
A:L7:	103.7
A:M7:	(K7/L7)
A:N7:	(L7+N6)
A:A8:	3
A:B8:	208.4
A:C8:	13.7
A:D8:	(C8-14.7)
A:E8:	'SA-90-064
A:F8:	(C8-C7)/(A8-A7)
A:G8:	(C7-F8*A7)
A:H8:	(A7)
A:I8:	(A8)
A:K8:	5.5
A:L8:	18.71
A:M8:	(K8/L8)
A:N8:	(L8+N7)
A:A9:	5
A:B9:	227.1
A:C9:	19.7
A:D9:	(C9-14.7)
A:E9:	""
A:F9:	(C9-C8)/(A9-A8)
A:G9:	(C8-F9*A8)

Altran Report
96227-TR-01 Rev. 0
Att./App. A Sh A 34

A:H9:	(A8)
A:I9:	(A9)
A:K9:	0
A:L9:	61.96
A:M9:	(K9/L9)
A:N9:	(L9+N8)
A:A10:	15
A:B10:	263.2
A:C10:	37.2
A:D10:	(C10-14.7)
A:E10:	""
A:F10:	(C10-C9)/(A10-A9)
A:G10:	(C9-F10*A9)
A:H10:	(A9)
A:I10:	(A10)
A:K10:	36
A:L10:	78.84
A:M10:	(K10/L10)
A:N10:	(L10+N9)
A:A11:	30
A:B11:	269.7
A:C11:	41.8
A:D11:	(C11-14.7)
A:E11:	""
A:F11:	(C11-C10)/(A11-A10)
A:G11:	(C10-F11*A10)
A:H11:	(A10)
A:I11:	(A11)
A:K11:	0
A:L11:	144.8
A:M11:	(K11/L11)
A:N11:	(L11+N10)
A:A12:	35
A:B12:	277.6

Altran Report
96227-TR-01 Rev. 0
Att./App. A Sh. A35

A:C12:	47.6
A:D12:	(C12-14.7)
A:E12:	""
A:F12:	(C12-C11)/(A12-A11)
A:G12:	(C11-F12*A11)
A:H12:	(A11)
A:I12:	(A12)
A:K12:	0
A:L12:	0.1
A:M12:	(K12/L12)
A:N12:	(L12+N11)
A:F13:	'above equations used until heater is draine
A:K13:	0
A:L13:	0.1
A:M13:	(K13/L13)
A:N13:	(L13+N12)
A:F14:	'when heater is drained then P2=P1(V1/v2)^1.1
A:A15:	"d=
A:B15:	13.124
A:C15:	'=inches
A:A16:	"dt=
A:B16:	0.2
A:C16:	'=seconds (time step)
A:A18:	'time
A:B18:	'P
A:C18:	'P
A:D18:	'h1
A:E18:	'P1+h1-1988
A:F18:	'K
A:G18:	'Q
A:H18:	'Q
A:I18:	'Vwtr
A:J18:	'dV in dt
A:K18:	'Vout

Altran Report
96227-TR-01 Rev. 0
Att./App. A Sh. A36

```
A:L18:   'h_el
A:M18:   'dh
A:N18:   'hammer
A:B19:   '(psia)
A:C19:   '(ft-gauge)
A:D19:   '(ft)
A:E19:   '(ft)
A:G19:   '(gpm)
A:H19:   '(ft3/s)
A:I19:   '(ft3)
A:J19:   '(ft3)
A:K19:   '(ft3)
A:L19:   '(ft)
A:M19:   '(ft)
A:N19:   '(psia)
A:B20:   42
A:L20:   @SUM(K7..K13)
A:N20:   'if void<
A:O20:   0.5
A:A21:   0
A:B21:   @IF(L$7<K21,B20*(K20/K21)^1.13,(@IF(A21<A$6,F$6*A21+G$6,@IF(A21<A$7,F$7*A21+G$7,@IF(A21<A$8,F$8*A21+G
         $8,@IF(A21<A$9,F$9*A21+G$9,@IF(A21<A$10,F$10*A21+G$10,@IF(A21<A$11,F$11*A21+G$11,F$12*A21+G$12))))))))
A:C21:   (B20-14.7)*2.31
A:D21:   2080.5
A:E21:   (C21+D21-1988)
A:F21:   27
A:I21:   '
A:O21:   'stm/wtr
A:A22:   1
A:B22:   @IF(L$7<K22,B21*(K21/K22)^1.13,(@IF(A22<A$6,F$6*A22+G$6,@IF(A22<A$7,F$7*A22+G$7,@IF(A22<A$8,F$8*A22+G
         $8,@IF(A22<A$9,F$9*A22+G$9,@IF(A22<A$10,F$10*A22+G$10,@IF(A22<A$11,F$11*A22+G$11,F$12*A22+G$12))))))))
A:C22:   (B21-14.7)*2.31
A:D22:   2080.5
A:E22:   (C22+D22-1988)
```

Altran Report
96227-TR-01 Rev. 0
Att./Arm. A Sh. A37

```
A:F22:   (F21)
A:A23:   2
A:B23:   @IF(L$7<K23,B22*(K22/K23)^1.13,(@IF(A23<A$6,F$6*A23+G$6,@IF(A23<A$7,F$7*A23+G$7,@IF(A23<A$8,F$8*A23+G
         $8,@IF(A23<A$9,F$9*A23+G$9,@IF(A23<A$10,F$10*A23+G$10,@IF(A23<A$11,F$11*A23+G$11,F$12*A23+G$12))))))))
A:C23:   (B22-14.7)*2.31
A:D23:   2080.5
A:E23:   (C23+D23-1988)
A:F23:   (F22)
A:G23:   (@SQRT(E23/(F23)/0.00259))*((B$15)^2)
A:H23:   (G23/7.48/60)
A:I23:   (N13)
A:J23:   (B16)*(H23)
A:K23:   (K20)+(J23)
A:L23:   (L20)
A:M23:   @IF(K23<N$7,J23*M$7,@IF(K23<N$8,J23*M$8,@IF(K23<N$9,J23*M$9,@IF(K23<N$10,J23*M$10,@IF(K23<N$11,J23*M
         11,@IF(K23<N$12,J23*M$12,J23*M$13))))))
A:N23:   @IF(M23=0#AND#K23>N$10#AND#K23<N$11#AND#(K23-N$10)/(N$11-K23)<O$20,0.707*2300*@SQRT(B23*60*(K23-N
         $10)/(N$11-K23)/32.2/144),0)
A:O23:   @IF(M23=0#AND#K23>N$10#AND#K23<N$11,(K23-N$10)/(N$11-K23),0
A:A24:   (A23+B$16)
A:B24:   @IF(L$7<K24,B23*(K23/K24)^1.13,(@IF(A24<A$6,F$6*A24+G$6,@IF(A24<A$7,F$7*A24+G$7,@IF(A24<A$8,F$8*A24+G
         $8,@IF(A24<A$9,F$9*A24+G$9,@IF(A24<A$10,F$10*A24+G$10,@IF(A24<A$11,F$11*A24+G$11,F$12*A24+G$12))))))))
A:C24:   (B23-14.7)*2.31
A:D24:   (D23-M23)
A:E24:   (C24+D24-1988)
A:F24:   (F23)
A:G24:   (@SQRT(E24/(F24)/0.00259))*((B$15)^2)
A:H24:   (G24/7.48/60)
A:I24:   (I23-J23)
A:J24:   (B$16)*(H24)
A:K24:   (K23)+(J24)
A:L24:   (L23-M23)
A:M24:   @IF(K24<N$7,J24*M$7,@IF(K24<N$8,J24*M$8,@IF(K24<N$9,J24*M$9,@IF(K24<N$10,J24*M$10,@IF(K24<N$11,J24*M
         11,@IF(K24<N$12,J24*M$12,J24*M$13))))))
```


Altran Report
96227-TR-01 Rev. 0

A:N24: @IF(M24=0#AND#K24>N$10#AND#K24<N$11#AND#(K24-N$10)/(N$11-K24)<O$20,0.707*2300*@SQRT(B24*60*(K24-N$10)/(N$11-K24)/32.2/144),0)

A:O24: @IF(M24=0#AND#K24>N$10#AND#K24<N$11,(K24-N$10)/(N$11-K24),0

A:A25: (A24+B$16)

A:B25: @IF(L$7<K25,B24*(K24/K25)^1.13,(@IF(A25<A$6,F$6*A25+G$6,@IF(A25<A$7,F$7*A25+G$7,@IF(A25<A$8,F$8*A25+G$8,@IF(A25<A$9,F$9*A25+G$9,@IF(A25<A$10,F$10*A25+G$10,@IF(A25<A$11,F$11*A25+G$11,F$12*A25+G$12))))))))

A:C25: (B24-14.7)*2.31

A:D25: (D24-M24)

A:E25: (C25+D25-1988)

A:F25: (F24)

A:G25: (@SQRT(E25/(F25)/0.00259))*((B$15)^2)

A:H25: (G25/7.48/60)

A:I25: (I24-J24)

A:J25: (B$16)*(H25)

A:K25: (K24)+(J25)

A:L25: (L24-M24)

A:M25: @IF(K25<N$7,J25*M$7,@IF(K25<N$8,J25*M$8,@IF(K25<N$9,J25*M$9,@IF(K25<N$10,J25*M$10,@IF(K25<N$11,J25*M11,@IF(K25<N$12,J25*M$12,J25*M$13))))))

A:N25: @IF(M25=0#AND#K25>N$10#AND#K25<N$11#AND#(K25-N$10)/(N$11-K25)<O$20,0.707*2300*@SQRT(B25*60*(K25-N$10)/(N$11-K25)/32.2/144),0)

A:O25: @IF(M25=0#AND#K25>N$10#AND#K25<N$11,(K25-N$10)/(N$11-K25),0

Altran Report
96227-TR-01 Rev. 0
Att./App. A

Appendix B - System Resistance Spreadsheet for Cases 1, 2, & 3
Number of pages including this sheet = 17

Altran Report
96227-TR-01 Rev. 0
Att./App. B Sh. B1

CASE 1 - A TRAIN RETURN PIPING										
LINE	NS	SCH	ID	LENGTH	F	K	14" LINE	TOTALS	EQUIVALENT	EQUIVALENT
A1	6	40	6.065	20.22	0.015	0.600	13.157			
A1	6	40	6.065	ELBOW	0.015	0.450	9.866			
A1	6	40	6.065	ELBOW	0.015	0.450	9.866			
A1	6	40	6.065	INCREASER		2.991	65.577	98.467		
A2	8	40	7.981	4.229	0.014	0.089	0.651			
A2	8	40	7.981	ELBOW	0.014	0.420	3.071			
A2	8	40	7.981	TEE	0.014	0.840	6.142	9.864	8.966	
A3	10	40	10.02	24.5	0.014	0.411	1.209			
A3	10	40	10.02	ELBOW	0.014	0.420	1.236			
A3	10	40	10.02	ELBOW	0.014	0.420	1.236			
A3	10	40	10.02	TEE	0.014	0.280	0.824			
A3	10	40	10.02	BTY VLV	0.014	0.490	1.442	5.947		14.913
C1	8	40	7.981	38	0.014	0.800	5.849			
C1	8	40	7.981	ELBOW	0.014	0.420	3.071			
C1	8	40	7.981	ELBOW	0.014	0.420	3.071			
C1	8	40	7.981	ELBOW	0.014	0.420	3.071			
C1	8	40	7.981	ELBOW	0.014	0.420	3.071			
C1	8	40	7.981	INCREASER		0.332	2.428	20.561		
C2	6	40	6.065	13.42	0.015	0.398	8.732			
C2	6	40	6.065	ELBOW	0.015	0.450	9.866			
C2	6	40	6.065	TEE	0.015	0.900	19.733	38.331	13.383	
C3	10	40	10.02	11.875	0.014	0.199	0.586			
C3	10	40	10.02	ELBOW	0.014	0.420	1.236			
C3	10	40	10.02	TEE	0.014	0.280	0.824			
C3	10	40	10.02	BTY VLV	0.014	0.490	1.442			
C3	10	40	10.02	INCREASER	0.014	0.512	1.507	5.595		18.977
										8.351
F1	14	40	13.124	186.7	0.013	2.219	2.219			
F1	14	40	13.124	9 ELBOWS	0.013	3.510	3.510			
F1	14	40	13.124	TEE	0.013	0.260	0.260			
F1	14	40	13.124	BTY VLV	0.013	121.000	121.000			
F1	14	40	13.124	FO		22.275	22.275			
F1	14	40	13.124	INCREASER	0.013	0.094	0.094	149.358		

Altran Report
Rev. 0
Att./App. B Sh. B2

F2	16	40	15	81.1	0.013	0.843	0.494			
F2	16	40	15	4 ELBOWS	0.013	1.560	0.914			
F2	16	40	15	4 TEES	0.013	1.040	0.609	2.018		
										159.726

Altran Report
Rev. D
Att./App. B Sh. B3

CASE 1 - A TRAIN SUPPLY PIPING											
LINE	NS	SCH	ID	LENGTH	F	K	14" LINE	TOTALS	EQUIVALENT	EQUIVALENT	TOTAL
A1	6	40	6.065	17.930	0.015	0.532	11.667				
A1	6	40	6.065	ELBOW	0.015	0.450	9.866				
A1	6	40	6.065	ELBOW	0.015	0.450	9.866				
A1	6	40	6.065	ELBOW	0.015	0.450	9.866				
A1	6	40	6.065	INCREASER		2.991	65.577	106.843			
A2	8	40	7.981	4.229	0.014	0.089	0.651				
A2	8	40	7.981	ELBOW	0.014	0.420	3.071				
A2	8	40	7.981	TEE	0.014	0.840	6.142	9.864	9.030		
A3	10	40	10.020	20.080	0.014	0.337	0.991				
A3	10	40	10.020	ELBOW	0.014	0.420	1.236				
A3	10	40	10.020	ELBOW	0.014	0.420	1.236				
A3	10	40	10.020	TEE	0.014	0.280	0.824				
A3	10	40	10.020	GATE VLV	0.014	0.112	0.330				
A3	10	40	10.020	TEE-BRANC	0.014	0.840	2.472	7.089	7.089	16.119	
C1	8	40	7.981	31.920	0.014	0.672	4.913				
C1	8	40	7.981	ELBOW	0.014	0.420	3.071				
C1	8	40	7.981	ELBOW	0.014	0.420	3.071				
C1	8	40	7.981	ELBOW	0.014	0.420	3.071				
C1	8	40	7.981	ELBOW	0.014	0.420	3.071				
C1	8	40	7.981	INCREASER		0.332	2.428	19.625			
C2	6	40	6.065	14.770	0.015	0.438	9.611				
C2	6	40	6.065	ELBOW	0.015	0.450	9.866				
C2	6	40	6.065	ELBOW	0.015	0.450	9.866				
C2	6	40	6.065	TEE	0.015	0.900	19.733	49.076	14.019		
C3	10	40	10.020	23.830	0.014	0.400	1.176				
C3	10	40	10.020	ELBOW	0.014	0.420	1.236				
C3	10	40	10.020	TEE	0.014	0.280	0.824				
C3	10	40	10.020	GATE	0.014	0.112	0.330				
C3	10	40	10.020	INCREASER	0.014	0.512	1.507	5.072	5.072	19.091	8.740
COM1	14	40	13.124	194.200	0.013	2.308	2.308				
COM1	14	40	13.124	11 ELBOWS	0.013	4.290	4.290				
COM1	14	40	13.124	2 TEE	0.013	0.520	0.520				
COM1	14	40	13.124	BTY VLV	0.013	0.455	0.455				

Altran Report
Rev. 0
Att./App. B Sh. B4

COM1	14	40	13.124	INCREASER	0.013	0.094	0.094	7.667			7.667
COM2	16	40	15.000	22.670	0.013	0.236	0.138				
COM2	16	40	15.000	2 TEES	0.013	0.520	0.305				
COM2	16	40	15.000	INCREASER	0.013	1.625	0.952	1.395			1.395
COM3	24	40	22.624	58.900	0.012	0.375	0.042				
	24	40	22.624	ELBOW	0.012	0.360	0.041				
	24	40	22.624	TEE RUN	0.012	0.240	0.027				
	24	40	22.624	TEE BRANC	0.012	0.720	0.082	0.192			0.192
COM4	30	STD	29.250	3.500	0.012	0.017	0.001	0.017			0.017
COM5	24	40	22.624	229.450	0.012	1.460	0.165				
	24	40	22.624	15 ELBOWS	0.012	5.400	0.611				
	24	40	22.624	2 TEE RUN	0.012	0.480	0.054				
	24	40	22.624	TEE BRANC	0.012	0.720	0.082				
	24	40	22.624	BTY VALVE	0.012	0.420	0.048				
	24	40	22.624	HT EXCH	0.012	1.710	0.194				
	24	40	22.624	INCREASER	0.012	0.451	0.051	1.205			1.205
											19.217

Altran Report
Rev. 0
Att./App. B Sh. B5

CASE1 - A TRAIN COMMON DISCHARGE PIPING									
LINE	NS	SCH	ID	LENGTH	F	K	14" LINE	TOTALS	EQUIVALENT
R1	30	STD	29.250	3.500	0.012	0.017	0.001	0.001	
R3	30	STD	29.250	MISC	0.012	257.656	10.442	10.442	10.443

Altran Report
_____ Rev. 0
Att./App. B Sh. B6

CASE 1 TOTAL SYSTEM RESISTANCE			
K_CASE1=	28		

Altran Report
_____ Rev. 0
Att./App. B Sh. B7

CASE 2 SYSTEM RESISTANCE										
LINE	NS	SCH	ID	LENGTH	F	K	14" LINE	TOTALS	EQUIVALENT	
R1	30	STD	29.250	3.500	0.012	0.017	0.001	0.001		
R2	30	STD	29.250	MISC	0.012	1021.616	41.405	41.405		
R3	30	STD	29.250	MISC	0.012	270.768	10.974	10.974	8.675	
S1	30	STD	29.250	MISC	0.012	270.768	10.974	10.974	5.487	
					CASE 1 DISCHARGE ADJUSTED:				130.751	
									22	TOTAL

Altran Report
Rev. 0
Att./App. B Sh. B8

CASE 3 SYSTEM RESISTANCE	
K_CASE_3=	27

Altran Report
_____ Rev. 0
Att./App. B Sh. B9

CA										
LIN	NS	SC	ID	LENGTH	F	K	14" LINE	TOTALS	EQUIVALENT	EQUIVALENT
A1	6	40	6.065	20.22	0.015	=F4*E4/(D4/12)	=G4*(13.124/D4)^4			
A1	6	40	6.065	ELBOW	0.015	=30*F5	=G5*(13.124/D5)^4			
A1	6	40	6.065	ELBOW	0.015	=30*F5	=G6*(13.124/D6)^4			
A1	6	40	6.065	INCREASER		=((1-(D7/10.02)^2)^2)/(D7/10.02)^4	=G7*(13.124/D7)^4	=SUM(H4:H7)		
A2	8	40	7.981	4.229	0.014	=F9*E9/(D9/12)	=G9*(13.124/D9)^4			
A2	8	40	7.981	ELBOW	0.014	=30*F9	=G10*(13.124/D10)^4			
A2	8	40	7.981	TEE	0.014	=60*F11	=G11*(13.124/D11)^4	=SUM(H9:H11)	=1/((1/I7)+(1/I11))	
A3	10	40	10.02	24.5	0.014	=F13*E13/(D13/12)	=G13*(13.124/D13)^4			
A3	10	40	10.02	ELBOW	0.014	=30*F14	=G14*(13.124/D14)^4			
A3	10	40	10.02	ELBOW	0.014	=30*F14	=G15*(13.124/D15)^4			
A3	10	40	10.02	TEE	0.014	=20*F16	=G16*(13.124/D16)^4			
A3	10	40	10.02	BTY VLV	0.014	=35*F17	=G17*(13.124/D17)^4	=SUM(H13:H17)		=J11+I17
C1	8	40	7.981	38	0.014	=F19*E19/(D19/12)	=G19*(13.124/D19)^4			
C1	8	40	7.981	ELBOW	0.014	=30*F20	=G20*(13.124/D20)^4			
C1	8	40	7.981	ELBOW	0.014	=30*F21	=G21*(13.124/D21)^4			
C1	8	40	7.981	ELBOW	0.014	=30*F22	=G22*(13.124/D22)^4			
C1	8	40	7.981	ELBOW	0.014	=30*F23	=G23*(13.124/D23)^4			
C1	8	40	7.981	INCREASER		=((1-(D24/10.02)^2)^2)/(D24/10.02)^4	=G24*(13.124/D24)^4	=SUM(H19:H24)		
C2	6	40	6.065	13.42	0.015	=F26*E26/(D26/12)	=G26*(13.124/D26)^4			
C2	6	40	6.065	ELBOW	0.015	=30*F27	=G27*(13.124/D27)^4			
C2	6	40	6.065	TEE	0.015	=60*F28	=G28*(13.124/D28)^4	=SUM(H26:H28)	=1/((1/I24)+(1/I28))	
C3	10	40	10.02	11.875	0.014	=F30*E30/(D30/12)	=G30*(13.124/D30)^4			
C3	10	40	10.02	ELBOW	0.014	=30*F31	=G31*(13.124/D31)^4			
C3	10	40	10.02	TEE	0.014	=20*F32	=G32*(13.124/D32)^4			
C3	10	40	10.02	BTY VLV	0.014	=35*F33	=G33*(13.124/D33)^4			
C3	10	40	10.02	INCREASER	0.014	=((1-(D34/13.124)^2)^2)/(D34/13.124)^4	=G34*(13.124/D34)^4	=SUM(H30:H34)		=J28+I34
										=1/((1/K17)+(1/K34))
F1	14	40	13.124	186.7	0.013	=F36*E36/(D36/12)	=G36*(13.124/D36)^4			
F1	14	40	13.124	9 ELBOWS	0.013	=9*30*F37	=G37*(13.124/D37)^4			
F1	14	40	13.124	TEE	0.013	=20*F38	=G38*(13.124/D38)^4			
F1	14	40	13.124	BTY VLV	0.013	121	=G39*(13.124/D39)^4			
F1	14	40	13.124	FO		=(1-(7/13.124)^2)/(((0.63)^2)*(7/13.124)^4)	=G40*(13.124/D40)^4			
F1	14	40	13.124	INCREASER	0.013	=((1-(D41/15)^2)^2)/(D41/15)^4	=G41*(13.124/D41)^4	=SUM(H36:H41)		

Altran Report

Rev. 0

F2	16	40	15	81.1	0.013	=F43*E43/(D43/12)	=G43*(13.124/D43)^4			
F2	16	40	15	4 ELBOWS	0.013	=4*30*F44	=G44*(13.124/D44)^4			
F2	16	40	15	4 TEES	0.013	=4*20*F45	=G45*(13.124/D45)^4	=SUM(H43:H45)		
										=K35+I41+I45

Altran Report
Rev. 0
Att./App. B Sh. B11

CAS											
LINE	NS	SC	ID	LENGTH	F	K	14" LINE	TOTALS	EQUIVALENT	EQUIVALE	TOTAL
A1	6	40	6.065	17.93	0.015	=F4*E4/(D4/12)	=G4*(13.124/D4)^4				
A1	6	40	6.065	ELBOW	0.015	=30*F5	=G5*(13.124/D5)^4				
A1	6	40	6.065	ELBOW	0.015	=30*F6	=G6*(13.124/D6)^4				
A1	6	40	6.065	ELBOW	0.015	=30*F5	=G7*(13.124/D7)^4				
A1	6	40	6.065	INCREASER		=((1-(D8/10.02)^2)^2)/(D8/10.02)^4	=G8*(13.124/D8)^4	=SUM(H4:H8)			
A2	8	40	7.981	4.229	0.014	=F10*E10/(D10/12)	=G10*(13.124/D10)^4				
A2	8	40	7.981	ELBOW	0.014	=30*F10	=G11*(13.124/D11)^4				
A2	8	40	7.981	TEE	0.014	=60*F12	=G12*(13.124/D12)^4	=SUM(H10:H12)	=1/((1/I8)+(1/I12))		
A3	10	40	10.02	20.08	0.014	=F14*E14/(D14/12)	=G14*(13.124/D14)^4				
A3	10	40	10.02	ELBOW	0.014	=30*F15	=G15*(13.124/D15)^4				
A3	10	40	10.02	ELBOW	0.014	=30*F15	=G16*(13.124/D16)^4				
A3	10	40	10.02	TEE	0.014	=20*F17	=G17*(13.124/D17)^4				
A3	10	40	10.02	GATE VLV	0.014	=8*F18	=G18*(13.124/D18)^4				
A3	10	40	10.02	TEE-BRANCH	0.014	=60*F19	=G19*(13.124/D19)^4	=SUM(H14:H19)	=I19	=J12+J19	
C1	8	40	7.981	31.92	0.014	=F21*E21/(D21/12)	=G21*(13.124/D21)^4				
C1	8	40	7.981	ELBOW	0.014	=30*F22	=G22*(13.124/D22)^4				
C1	8	40	7.981	ELBOW	0.014	=30*F23	=G23*(13.124/D23)^4				
C1	8	40	7.981	ELBOW	0.014	=30*F24	=G24*(13.124/D24)^4				
C1	8	40	7.981	ELBOW	0.014	=30*F25	=G25*(13.124/D25)^4				
C1	8	40	7.981	INCREASER		=((1-(D26/10.02)^2)^2)/(D26/10.02)^4	=G26*(13.124/D26)^4	=SUM(H21:H26)			
C2	6	40	6.065	14.77	0.015	=F28*E28/(D28/12)	=G28*(13.124/D28)^4				
C2	6	40	6.065	ELBOW	0.015	=30*F29	=G29*(13.124/D29)^4				
C2	6	40	6.065	ELBOW	0.015	=30*F30	=G30*(13.124/D30)^4				
C2	6	40	6.065	TEE	0.015	=60*F31	=G31*(13.124/D31)^4	=SUM(H28:H31)	=1/((1/I26)+(1/I31))		
C3	10	40	10.02	23.83	0.014	=F33*E33/(D33/12)	=G33*(13.124/D33)^4				
C3	10	40	10.02	ELBOW	0.014	=30*F34	=G34*(13.124/D34)^4				
C3	10	40	10.02	TEE	0.014	=20*F35	=G35*(13.124/D35)^4				
C3	10	40	10.02	GATE	0.014	=8*F36	=G36*(13.124/D36)^4				
C3	10	40	10.02	INCREASER	0.014	=((1-(D37/13.124)^2)^2)/(D37/13.124)^4	=G37*(13.124/D37)^4	=SUM(H33:H37)	=I37	=J31+J37	=1/((1/K19)+(1/K37))
COM	14	40	13.124	194.2	0.013	=F39*E39/(D39/12)	=G39*(13.124/D39)^4				
COM	14	40	13.124	11 ELBOWS	0.013	=11*30*F40	=G40*(13.124/D40)^4				

ALTRAN
CALC NO. 96277 TR01 REV 2
ATT APPX B SHEET B12

COM	14	40	13.124	2 TEE	0.013	=2*20*F41	=G41*(13.124/D41)^4				
COM	14	40	13.124	BTY VLV	0.013	=35*F42	=G42*(13.124/D42)^4				
COM	14	40	13.124	INCREASER	0.013	=((1-(D43/15)^2)^2)/(D43/15)^4	=G43*(13.124/D43)^4	=SUM(H39:H43)			=I43
COM	16	40	15	22.67	0.013	=F45*E45/(D45/12)	=G45*(13.124/D45)^4				
COM	16	40	15	2 TEES	0.013	=2*20*F46	=G46*(13.124/D46)^4				
COM	16	40	15	INCREASER	0.013	=((1-(D47/22.624)^2)^2)/(D47/22.624)^4	=G47*(13.124/D47)^4	=SUM(H45:H47)			=I47
COM	24	40	22.624	58.9	0.012	=F49*E49/(D49/12)	=G49*(13.124/D49)^4				
	24	40	22.624	ELBOW	0.012	=30*F50	=G50*(13.124/D50)^4				
	24	40	22.624	TEE RUN	0.012	=20*F51	=G51*(13.124/D51)^4				
	24	40	22.624	TEE BRANCH	0.012	=60*F52	=G52*(13.124/D52)^4	=SUM(H49:H52)			=I52
COM	30	STD	29.25	3.5	0.012	=F54*E54/(D54/12)	=G54*(13.124/D54)^4	=G54			=I54
COM	24	40	22.624	229.45	0.012	=F57*E57/(D57/12)	=G57*(13.124/D57)^4				
	24	40	22.624	15 ELBOWS	0.012	=15*30*F58	=G58*(13.124/D58)^4				
	24	40	22.624	2 TEE RUN	0.012	=2*20*F59	=G59*(13.124/D59)^4				
	24	40	22.624	TEE BRANCH	0.012	=60*F60	=G60*(13.124/D60)^4				
	24	40	22.624	BTY VALVE	0.012	=35*F61	=G61*(13.124/D61)^4				
	24	40	22.624	HT EXCH	0.012	1.71	=G62*(13.124/D62)^4				
	24	40	22.624	INCREASER	0.012	=((1-(D63/29.25)^2)^2)/(D63/29.25)^4	=G63*(13.124/D63)^4	=SUM(H57:H63)			=I63
											=SUM(L37,L43,L47,L52,L54,L63)

ALTRAN
CALC NO. 90127-TR01 REV 0
ATT. MR B SHEET B13

CASE _ DISCH

CASE1 -									
LINE	NS	SCH	ID	LENGTH	F	K	14" LINE	TOTALS	EQUIVALENT
R1	30	STD	29.25	3.5	0.012	=F4*E4/(D4/12)	=G4*(13.124/D4)^4	=H4	
R3	30	STD	29.25	MISC	0.012	=891*((D6)^4)/(1591)^2	=G6*(13.124/D6)^4	=H6	=I4+I6

ALTRAN
CALC NO. 96227 TRU REV 0
ATT. APP B SHEET B14

CASE 1 TOTAL SYSTEM RESI	
K_CASE1=	=(1/((1/[APPXBEQ.XLS]CASE1_RTN!K46)+(1/[APPXBEQ.XLS]CASE1_SUP!L66)))+[APPXBEQ.XLS]CASE1_DISCH!J6

ALTRAN
CALC NO 96222-TR-01 REV 0
ATT. APPX B SHEET B15

C										
LI	N	SC	ID	LEN	F	K	14" LINE	TOT	EQUIVALENT	
R1	30	STD	29.25	3.5	0.012	=F5*E5/(D5/12)	=G5*(13.124/D5)^4	=H5		
R2	30	STD	29.25	MIS	0.012	=891*((D7)^4)/(799)^2	=G7*(13.124/D7)^4	=H7		
R3	30	STD	29.25	MIS	0.012	=891*((D9)^4)/(1552)^2	=G9*(13.124/D9)^4	=H9	=I5+(1/((1/I9)+(1/I7)))	
S1	30	STD	29.25	MIS	0.012	=891*((D11)^4)/(1552)^2	=G11*(13.124/D11)^4	=H1	=1/((1/I9)+(1/I11))	
					CAS				=[APPXB.XLS]CASE1_RTN!K46*(2470/2730)^2	
									=(1/((1/J13)+(1/[APPXB.XLS]CASE1_SUP!L66))+'[APPXB.XLS]CASE 2'!J11)	TOTAL

ALTRAN
CALC NO. 96227-TR-01 REV. 0
ATT. APPX B SHEET 51 of

APPENDIX B

CASE 3 SYSTEM RESIST		
K_CASE_3=		=(1/((1/'[APPXB.XLS]CASE 2'!J13)+(1/[APPXB.XLS]CASE1_SUP!L66)))+[APPXB.XLS]CASE1_DISCH!J6

ALTRAN
CALC NO 910227-TR-01 REV 0
ATT. APPX B SHEET 10

Appendix C - Sonic Velocity Spreadsheet
Number of pages including this sheet = 3

A	A	B	C	D	E	F	G	H	I	J	K	L
1		using eq. 8-4 from Wylie & Streeter & checked w/ eq. 9.18 from Applied Hydraulic Transients:										
2		temp effect:		using S= dissolved air in wtr=.032+3.3e-4*T from T=32 to 68 [approx from Mark's p. 6-7]								
3				using S= dissolved air in wtr=.02+5.56e-5*T from T=68 to 212 [Mark's p. 6-7]								
4				S'=free air in wtr= (S@Tstart)-(S@Tend)								
5		press effect:		S"=free air from pressure drop=S*(14.7-P)/14.7) for P<14.7 else S"=0								
6												
7												
8												
9		using row_gas=2.7(Po)/(Temp+460) [treating as ideal gas, constant volume]										
10		using Kl=Ko where Ko= 19.5+.03T for 32<T<150 and Ko=26-.0148T for 150<T<260 [approximation of p.3.110 Pump Han										
11		using wtr density=row=62.2-5.94e-3T for 32<T<100 and row=64.26-.02264T for 100<T<280										
12			Tstart=	95		S@Tstart=	0.0065					
13			Pstart=	14.7								
14	Tend	row_wtr										
15	Temp	@ Tend	S	S'	S"		row_gas	Kl	D	E	t	C
16	(F)	(lb/ft3)	dissolved	from temp	from press		(lb/ft3)	(psi)	(inch)	(psi)	(inch)	ft/sec
17	35	61.992	0.031035	0	0		0.080182	302085	10.75	2.8E+07	0.365	4135.448
18	50	61.903	0.026035	0	0		0.077824	308700	10.75	2.8E+07	0.365	4172.398
19	65	61.814	0.021036	0	0		0.0756	315315	10.75	2.8E+07	0.365	4208.775
20	80	61.725	0.011756	0	0		0.0735	321930	10.75	2.8E+07	0.365	4244.597
21	95	61.636	0.010922	0	0		0.071514	328545	10.75	2.8E+07	0.365	4279.884
22	98	61.618	0.010756	0	0		0.071129	329868	10.75	2.8E+07	0.365	4286.879
23	100	61.996	0.010644	0	0		0.070875	330750	10.75	2.8E+07	0.365	4278.011
24	105	61.883	0.010367	0	0		0.070248	332955	10.75	2.8E+07	0.365	4292.45
25	108	61.815	0.0102	0	0		0.069877	334278	10.75	2.8E+07	0.365	4301.098
26	110	61.77	0.010089	- 0	0		0.069632	335160	10.75	2.8E+07	0.365	4306.858
27	125	61.43	0.009255	0	0		0.067846	341775	10.75	2.8E+07	0.365	4349.893
28	140	61.09	0.008422	0	0		0.06615	348390	10.75	2.8E+07	0.365	4392.661
29	155	60.751	0.007589	0	0		0.064537	348478.2	10.75	2.8E+07	0.365	4405.329
30	170	60.411	0.006755	0	0		0.063	345214.8	10.75	2.8E+07	0.365	4402.536
31	185	60.072	0.005922	0.00057786	0		0.061535	341951.4	10.75	2.8E+07	0.365	1335.564
32	200	59.732	0.005089	0.0014112	0		0.060136	338688	10.75	2.8E+07	0.365	881.255
33	215	59.392	0.004255	0.00224454	0		0.0588	335424.6	10.75	2.8E+07	0.365	705.9825
34	230	59.053	0.003422	0.00307788	0		0.057522	332161.2	10.75	2.8E+07	0.365	606.6952
35	245	58.713	0.002589	0.00391122	0		0.056298	328897.8	10.75	2.8E+07	0.365	540.8215
5	260	58.374	0.001755	0.00474456	0		0.055125	325634.4	10.75	2.8E+07	0.365	493.0965

ALTRAN

CALC NO. 96227-TR-01 REV. 0

ATT. Appx C SHEET C2

```
A:B1:    'using eq. 8-4 from Wylie & Streeter & checked w/ eq. 9.18 from Applied Hydraulic Transients
A:B2:    'temp effect:
A:D2:    'using S= dissolved air in wtr=.032+3.3e-4*T  from T=32 to 68 [approx from Mark's p. 6-7]
A:D3:    'using S= dissolved air in wtr=.02+5.56e-5*T  from T=68 to 212 [Mark's p. 6-7]
A:D4:    'S'=free air in wtr= (S@Tstart)-(S@Tend)
A:B5:    'press effect:
A:D5:    'S"=free air from pressure drop=S*(14.7-P)/14.7) for P<14.7 else S"=0
A:B9:    'using row_gas=2.7(Po)/(Temp+460) [treating as ideal gas, constant volume]
A:B10:   'using Kl=Ko where Ko= 19.5+.03T for 32<T<150  and  Ko=26-.0148T for 150<T<260 [approximation of p.3.110 Pump Handbo
         ok]
A:B11:   'using wtr density=row=62.2-5.94e-3T for 32<T<100 and row=64.26-.02264T for 100<T<280
A:C12:   "Tstart=
A:D12:   95
A:F12:   'S@Tstart=
A:G12:   0.0065
A:C13:   "Pstart=
A:D13:   14.7
A:A14:   'Tend
A:B14:   'row_wtr
A:A15:   'Temp
A:B15:   '@ Tend
A:C15:   'S
A:D15:   'S'
A:E15:   'S"
A:G15:   'row_gas
A:H15:   'Kl
A:I15:   'D
A:J15:   'E
A:K15:   't
A:L15:   'C
A:A16:   '(F)
A:B16:   '(lb/ft3)
A:C16:   'dissolved
A:D16:   'from temp
A:E16:   'from press
A:G16:   '(lb/ft3)
A:H16:   '(psi)
A:I16:   '(inch)
A:J16:   '(psi)
A:K16:   '(inch)
A:L16:   'ft/sec
A:A17:   35
A:B17:   @IF(A17<100,62.2-0.00594*A17,64.26-0.02264*A17)
A:C17:   @IF(A17<68,(0.0427-0.0003333*A17),(0.0162-5.5556E-05*A17))
A:D17:   @IF((G$12-C17)<0,0,(G$12-C17))
A:E17:   @IF(D$13<14.7,G$12*(14.7-D$13)/14.7,0)
A:G17:   (2.7*(D$13)/(A17+460))
A:H17:   @IF(A17<150,((19.5+0.03*(A17))),((26-0.0148*(A17))))*14700
A:I17:   10.75
A:J17:   27700000
A:K17:   0.365
A:L17:   @SQRT((32.2*144*$H17/$B17)/(1+($H17*$I17/($J17*$K17))+($D17*$G17*$H17*53.3*(460+$A17)*(1/144)/($D$13^2))))
A:A18:   (A17+15)
A:B18:   @IF(A18<100,62.2-0.00594*A18,64.26-0.02264*A18)
A:C18:   @IF(A18<68,(0.0427-0.0003333*A18),(0.0162-5.5556E-05*A18))
A:D18:   @IF((G$12-C18)<0,0,(G$12-C18))
A:E18:   @IF(D$13<14.7,G$12*(14.7-D$13)/14.7,0)
A:G18:   (2.7*(D$13)/(A18+460))
A:H18:   @IF(A18<150,((19.5+0.03*(A18))),((26-0.0148*(A18))))*14700
A:I18:   10.75
A:J18:   27700000
A:K18:   0.365
A:L18:   @SQRT((32.2*144*$H18/$B18)/(1+($H18*$I18/($J18*$K18))+($D18*$G18*$H18*53.3*(460+$A18)*(1/144)/($D$13^2))))
A:A19:   (A18+15)
A:B19:   @IF(A19<100,62.2-0.00594*A19,64.26-0.02264*A19)
A:C19:   @IF(A19<68,(0.0427-0.0003333*A19),(0.0162-5.5556E-05*A19))
A:D19:   @IF((G$12-C19)<0,0,(G$12-C19))
A:E19:   @IF(D$13<14.7,G$12*(14.7-D$13)/14.7,0)
A:G19:   (2.7*(D$13)/(A19+460))
A:H19:   @IF(A19<150,((19.5+0.03*(A19))),((26-0.0148*(A19))))*14700
A:I19:   10.75
A:J19:   27700000
A:K19:   0.365
A:L19:   @SQRT((32.2*144*$H19/$B19)/(1+($H19*$I19/($J19*$K19))+($D19*$G19*$H19*53.3*(460+$A19)*(1/144)/($D$13^2))))
```

Appendix D - Plant Data Including:
Number of pages including this sheet = 14

- IST Valve Data Sheets
- 11/21/96 Telecon: Bill Selbe (WCNOC) with Matt Zweigle (Altran)
- Containment Cooler Data Sheet
- ESW Pump Curve

WOLF CREEK NUCLEAR OPERATING CORPORATION
IST DESIGN BASIS DOCUMENT
VALVE DATA SHEET

ALTRAN
CALC NO. 966227-TR-01 REV. 0
ATT. Appx D SHEET D2

VALVE ID: EFHV0023

DESCRIPTION: ESW A/SERVICE WATER CROSS CONNECT VALVE
P&ID M-12EF01(Q) COORD: F-7 CODE CLASS: 3 NORMAL POS: O
VALVE TYPE: BTF ACTUATOR TYPE: MO SIZE: 30 Category: B Active

SAFE FUNCTION(S):

OPEN: None.

CLOSE: Isolates safety-related ESW from non-safety-related Service Water on SIS, Loss of Offsite Power, or Aux Feedwater Pump Low Suction Pressure.

TEST TYPE	REQ'D	TEST PROCEDURE	FREQUENCY	RELIEF REQUEST
LEAK RATE TEST	N	N/A	N/A	N/A
EXERCISE-OPEN	N	N/A	N/A	N/A
EXERCISE-CLOSED	Y	STS EF-100A	Q	N/A
STROKE TIME OPEN	N	N/A	N/A	N/A
STROKE TIME CLOSED	Y	STS EF-100A	Q	N/A
FAIL-SAFE	N	N/A	N/A	N/A
RELIEF SETPOINT	N	N/A	N/A	N/A
REMOTE POSITION IND	Y	STS EF-301A	2Y	N/A

ACCEPTANCE CRITERIA:

Max.Closing Time: 30.0 sec.

BASIS OF ACCEPTANCE CRITERIA:

Maximum allowable stroke time from E-025-00007: 30 sec.

PHYSICAL DATA

MANUFACTURER: JAMESBURY MODEL NO: 8226-EX ANSI #: 150
LOCATION: CTRL ROOM: 3101 ELEVATION: 1976
LINE NUMBER: 010-HBC-30" DESIGN PRESSURE/TEMP: 200/ 185
VENDOR DRAWING: M-235-00004 POWER SUPPLY: NG01A

REMARKS:

More safety signifcant. F-V is greater than .01 (high). RAW is 9.2 (medium), Common Cause is low.

REFERENCES:

USAR: 9.2.1
TECH SPECS: 3.7.4
OTHER: OM-10; GL 89-04

WOLF CREEK NUCLEAR OPERATING CORPORATION
IST DESIGN BASIS DOCUMENT
VALVE DATA SHEET

ALTRAN
CALC NO. 96227-M01 REV. 0
ATT. APPX D SHEET D3

VALVE ID: EFHV0024

DESCRIPTION: ESW B/SERVICE WATER CROSS CONNECT VALVE
P&ID M-12EF01(Q) COORD: E-6 CODE CLASS: 3 NORMAL POS: O
VALVE TYPE: BTF ACTUATOR TYPE: MO SIZE: 30 Category: B Active

SAFE FUNCTION(S):

OPEN: None.

CLOSE: Isolates safety-related ESW from non-safety-related Service Water on SIS, Loss of Offsite Power, or Aux Feedwater Pump Low Suction Pressure.

TEST TYPE	REQ'D	TEST PROCEDURE	FREQUENCY	RELIEF REQUEST
LEAK RATE TEST	N	N/A	N/A	N/A
EXERCISE-OPEN	N	N/A	N/A	N/A
EXERCISE-CLOSED	Y	STS EF-100B	Q	N/A
STROKE TIME OPEN	N	N/A	N/A	N/A
STROKE TIME CLOSED	Y	STS EF-100B	Q	N/A
FAIL-SAFE	N	N/A	N/A	N/A
RELIEF SETPOINT	N	N/A	N/A	N/A
REMOTE POSITION IND	Y	STS EF-301B	2Y	N/A

ACCEPTANCE CRITERIA:

Max.Closing Time: 30.0 sec.

BASIS OF ACCEPTANCE CRITERIA:

Maximum allowable stroke time from E-025-00007: 30.0 sec.

PHYSICAL DATA

MANUFACTURER: JAMESBURY MODEL NO: 8226-EX ANSI #: 150
LOCATION: CTRL ROOM: 3101 ELEVATION: 1976
LINE NUMBER: 011-HBC-30" DESIGN PRESSURE/TEMP: 200/ 185
VENDOR DRAWING: M-235-00004 POWER SUPPLY: NG01A

REMARKS:

More safety signifcant. F-V is greater than .01 (high). RAW is 9.2 (medium), Common Cause is low.

REFERENCES:

USAR: 9.2.1
TECH SPECS: 3.7.4
OTHER: OM-10; GL 89-04

WOLF CREEK NUCLEAR OPERATING CORPORATION
IST DESIGN BASIS DOCUMENT
VALVE DATA SHEET

ALTRAN
CALC NO. 96227TR01 REV. 0
ATT. APPX D SHEET D4

VALVE ID: EFHV0025

DESCRIPTION: ESW A/SERVICE WATER CROSS CONNECT VALVE
P&ID M-12EF01(Q) COORD: F-7 CODE CLASS: 3 NORMAL POS: O
VALVE TYPE: BTF ACTUATOR TYPE: MO SIZE: 30 Category: B Active

SAFE FUNCTION(S):

OPEN: None.

CLOSE: Isolates safety-related ESW from non-safety-related Service Water on SIS, Loss of Offsite Power, or Aux Feedwater Pump Low Suction Pressure.

TEST TYPE	REQ'D	TEST PROCEDURE	FREQUENCY	RELIEF REQUEST
LEAK RATE TEST	N	N/A	N/A	N/A
EXERCISE-OPEN	N	N/A	N/A	N/A
EXERCISE-CLOSED	Y	STS EF-100A	Q	N/A
STROKE TIME OPEN	N	N/A	N/A	N/A
STROKE TIME CLOSED	Y	STS EF-100A	Q	N/A
FAIL-SAFE	N	N/A	N/A	N/A
RELIEF SETPOINT	N	N/A	N/A	N/A
REMOTE POSITION IND	Y	STS EF-301A	2Y	N/A

ACCEPTANCE CRITERIA:

Max.Closing Time: 30.0 sec.

BASIS OF ACCEPTANCE CRITERIA:

Maximum allowable stroke time from E-025-0007: 30.0 sec.

PHYSICAL DATA

MANUFACTURER: JAMESBURY MODEL NO: 8226-EX ANSI #: 150
LOCATION: CTRL ROOM: 3101 ELEVATION: 1976
LINE NUMBER: 010-HBC-30" DESIGN PRESSURE/TEMP: 200/ 185
VENDOR DRAWING: M-235-00004 POWER SUPPLY: NG02A

REMARKS:

More safety signifcant. F-V is greater than .01 (high). RAW is 9.2 (medium), Common Cause is low.

REFERENCES:

USAR: 9.2.1
TECH SPECS: 3.7.4
OTHER: OM-10; GL 89-04

WOLF CREEK NUCLEAR OPERATING CORPORATION
IST DESIGN BASIS DOCUMENT
VALVE DATA SHEET

ALTRAN
CALC NO. 96227TR01 REV. 0
ATT. APPX D SHEET D5

VALVE ID: EFHV0026

DESCRIPTION: ESW B/SERVICE WATER CROSS CONNECT VALVE
P&ID M-12EF01(Q) COORD: E-7 CODE CLASS: 3 NORMAL POS: O
VALVE TYPE: BTF ACTUATOR TYPE: MO SIZE: 30 Category: B Active

SAFE FUNCTION(S):

OPEN: None.

CLOSE: Isolates safety-related ESW from non-safety-related Service Water on SIS, Loss of Offsite Power, or Aux Feedwater Pump Low Suction Pressure.

TEST TYPE	REQ'D	TEST PROCEDURE	FREQUENCY	RELIEF REQUEST
LEAK RATE TEST	N	N/A	N/A	N/A
EXERCISE-OPEN	N	N/A	N/A	N/A
EXERCISE-CLOSED	Y	STS EF-100B	Q	N/A
STROKE TIME OPEN	N	N/A	N/A	N/A
STROKE TIME CLOSED	Y	STS EF-100B	Q	N/A
FAIL-SAFE	N	N/A	N/A	N/A
RELIEF SETPOINT	N	N/A	N/A	N/A
REMOTE POSITION IND	Y	STS EF-301B	2Y	N/A

ACCEPTANCE CRITERIA:

Max.Closing Time: 30.0 sec.

BASIS OF ACCEPTANCE CRITERIA:

Maximum allowable stroke time from E-025-00007: 30.0 sec.

PHYSICAL DATA

MANUFACTURER: JAMESBURY MODEL NO: 8226-EX ANSI #: 150
LOCATION: CTRL ROOM: 3101 ELEVATION: 1976
LINE NUMBER: 011-HBC-30" DESIGN PRESSURE/TEMP: 200/ 185
VENDOR DRAWING: M-235-00004 POWER SUPPLY: NG02A

REMARKS:

More safety signifcant. F-V is greater than .01 (high). RAW is 9.2 (medium), Common Cause is low.

REFERENCES:

USAR: 9.2.1
TECH SPECS: 3.7.4
OTHER: OM-10; GL 89-04

WOLF CREEK NUCLEAR OPERATING CORPORATION
IST DESIGN BASIS DOCUMENT
VALVE DATA SHEET

ALTRAN
CALC NO. 96227TR01 REV. 0
ATT. APPX D SHEET D6

VALVE ID: EFHV0037

DESCRIPTION: ESW A TO ULTIMATE HEAT SINK THROTTLED
P&ID M-12EF02(Q) COORD: G-3 CODE CLASS: 3 NORMAL POS: O/T
VALVE TYPE: BTF ACTUATOR TYPE: MO SIZE: 30 Category: B Active

SAFE FUNCTION(S):

OPEN: Opens on SIS or Loss of Offsite Power signal to return heated ESW to the Ultimate Heat Sink via the safety-related ESW return header.

CLOSE: None.

TEST TYPE	REQ'D	TEST PROCEDURE	FREQUENCY	RELIEF REQUEST
LEAK RATE TEST	N	N/A	N/A	N/A
EXERCISE-OPEN	Y	STS EF-201A	Q	N/A
EXERCISE-CLOSED	N	N/A	N/A	N/A
STROKE TIME OPEN	Y	STS EF-201A	Q	N/A
STROKE TIME CLOSED	N	N/A	N/A	N/A
FAIL-SAFE	N	N/A	N/A	N/A
RELIEF SETPOINT	N	N/A	N/A	N/A
REMOTE POSITION IND	Y	STS EF-201A	2Y	N/A

ACCEPTANCE CRITERIA:

Max. Opening Time: 6 sec.

BASIS OF ACCEPTANCE CRITERIA:

Later

PHYSICAL DATA

MANUFACTURER: JAMESBURY MODEL NO: 8226-EX ANSI #: 150
LOCATION: CTRL ROOM: 3101 ELEVATION: 1979
LINE NUMBER: 081-HBC-30" DESIGN PRESSURE/TEMP: 200/ 185
VENDOR DRAWING: M-235-00004 POWER SUPPLY: NG01A

REMARKS:

More safety significant. F-V is above .01 (high). RAW is 11.9 (high). Valve is normally throttled and could be in a wide range of positions when required to go fully open. Refer to P&ID, Note 11.

REFERENCES:

USAR: 9.2.1
TECH SPECS: 3.7.4
OTHER: OM-10; GL 89-04

WOLF CREEK NUCLEAR OPERATING CORPORATION
IST DESIGN BASIS DOCUMENT
VALVE DATA SHEET

ALTRAN
CALC NO. 96227TR01 REV. 0
ATT. APPX D SHEET 07

VALVE ID: EFHV0038

DESCRIPTION: ESW B TO ULTIMATE HEAT SINK
P&ID M-12EF02(Q) COORD: C-3 CODE CLASS: 3 NORMAL POS: O/T
VALVE TYPE: BTF ACTUATOR TYPE: MO SIZE: 30 Category: B Active

SAFE FUNCTION(S):

OPEN: Opens on SIS or Loss of Offsite Power signal to return heated ESW to the Ultimate Heat Sink via the safety-related ESW return header.

CLOSE: None

TEST TYPE	REQ'D	TEST PROCEDURE	FREQUENCY	RELIEF REQUEST
LEAK RATE TEST	N	N/A	N/A	N/A
EXERCISE-OPEN	Y	STS EF-201B	Q	N/A
EXERCISE-CLOSED	N	N/A	N/A	N/A
STROKE TIME OPEN	Y	STS EF-201B	Q	N/A
STROKE TIME CLOSED	N	N/A	N/A	N/A
FAIL-SAFE	N	N/A	N/A	N/A
RELIEF SETPOINT	N	N/A	N/A	N/A
REMOTE POSITION IND	Y	STS EF-201B	2Y	N/A

ACCEPTANCE CRITERIA:

Max.Opening Time: 13.5 sec.

BASIS OF ACCEPTANCE CRITERIA:

Later

PHYSICAL DATA

MANUFACTURER: JAMESBURY MODEL NO: 8226-EX ANSI #: 150
LOCATION: CTRL ROOM: 3101 ELEVATION: 1979
LINE NUMBER: 138-HBC-30" DESIGN PRESSURE/TEMP: 200/ 185
VENDOR DRAWING: M-235-00004 POWER SUPPLY: NG02A

REMARKS:

More safety significant. F-V is above .01 (high). RAW is 11.9 (high). Valve is normally throttled and could be in a wide range of positions when required to go fully open. Refer to P&ID, Note 11.

REFERENCES:

USAR: 9.2.1
TECH SPECS: 3.7.4
OTHER: OM-10; GL 89-04

WOLF CREEK NUCLEAR OPERATING CORPORATION
IST DESIGN BASIS DOCUMENT
VALVE DATA SHEET

ALTRAN
CALC NO. 96227-TR01 REV. 0
ATT. APPX D SHEET D8

VALVE ID: EFHV0039

DESCRIPTION: ESW A TO SERVICE WATER SYS
P&ID M-12EF02(Q) COORD: F-3 CODE CLASS: 3 NORMAL POS: O/T
VALVE TYPE: BTF ACTUATOR TYPE: MO SIZE: 30 Category: B Active

SAFE FUNCTION(S):

OPEN: None.

CLOSE: Closes on SIS or Loss of Offsite Power signal to direct heated ESW Train A discharge flow to the Ultimate Heat Sink via the safety-related ESW header.

TEST TYPE	REQ'D	TEST PROCEDURE	FREQUENCY	RELIEF REQUEST
LEAK RATE TEST	N	N/A	N/A	N/A
EXERCISE-OPEN	N	N/A	N/A	N/A
EXERCISE-CLOSED	Y	STS EF-201A	Q	N/A
STROKE TIME OPEN	N	N/A	N/A	N/A
STROKE TIME CLOSED	Y	STS EF-201A	Q	N/A
FAIL-SAFE	N	N/A	N/A	N/A
RELIEF SETPOINT	N	N/A	N/A	N/A
REMOTE POSITION IND	Y	STS EF-201A	2Y	N/A

ACCEPTANCE CRITERIA:

Max.Closing Time: 30 sec.

BASIS OF ACCEPTANCE CRITERIA:

Maximum allowable closing time from E-025-0007: 30 sec.

PHYSICAL DATA

MANUFACTURER: JAMESBURY MODEL NO: 8226-EX ANSI #: 150
LOCATION: CTRL ROOM: 3101 ELEVATION: 1976
LINE NUMBER: 082-HBC-30" DESIGN PRESSURE/TEMP: 200/ 185
VENDOR DRAWING: M-235-00004 POWER SUPPLY: NG02A

REMARKS:

Less safety significant. Valve operation is verified during SIS actuation test and quarterly pump test. Valve is normally throttled and could be in a wide range of positions when required to close. Refer to P&ID, Note 12.

REFERENCES:

USAR: 9.2.1
TECH SPECS: 3.7.4
OTHER: OM-10; GL 89-04

WOLF CREEK NUCLEAR OPERATING CORPORATION
IST DESIGN BASIS DOCUMENT
VALVE DATA SHEET

ALTRAN
CALC NO. 96227TR01 REV. 0
ATT. APPX D SHEET D9

VALVE ID: EFHV0040

DESCRIPTION: ESW B TO SERVICE WATER SYS
P&ID M-12EF02(Q) COORD: D-3 CODE CLASS: 3 NORMAL POS: O/T
VALVE TYPE: BTF ACTUATOR TYPE: MO SIZE: 30 Category: B Active

SAFE FUNCTION(S):

OPEN: None.

CLOSE: Closes on SIS or Loss of Offsite Power signal to direct heated ESW Train B discharge flow to the Ultimate Heat Sink via the safety-related ESW header.

TEST TYPE	REQ'D	TEST PROCEDURE	FREQUENCY	RELIEF REQUEST
LEAK RATE TEST	N	N/A	N/A	N/A
EXERCISE-OPEN	N	N/A	N/A	N/A
EXERCISE-CLOSED	Y	STS EF-201B	Q	N/A
STROKE TIME OPEN	N	N/A	N/A	N/A
STROKE TIME CLOSED	Y	STS EF-201B	Q	N/A
FAIL-SAFE	N	N/A	N/A	N/A
RELIEF SETPOINT	N	N/A	N/A	N/A
REMOTE POSITION IND	Y	STS EF-201B	2Y	N/A

ACCEPTANCE CRITERIA:

Max.Closing Time: 30 sec.

BASIS OF ACCEPTANCE CRITERIA:

Maximum allowable closing time from E-025-00007: 30 sec.

PHYSICAL DATA

MANUFACTURER: JAMESBURY MODEL NO: 8226-EX ANSI #: 150
LOCATION: CTRL ROOM: 3101 ELEVATION: 1976
LINE NUMBER: 139-HBC-30" DESIGN PRESSURE/TEMP: 200/ 185
VENDOR DRAWING: M-235-00004 POWER SUPPLY: NG02A

REMARKS:

Less safety significant. Valve operation is verified during SIS actuation test and quarterly pump test. Valve is normally throttled and could be in a wide range of positions when required to close. Refer to P&ID, Note 12.

REFERENCES:

USAR: 9.2.1
TECH SPECS: 3.7.4
OTHER: OM-10; GL 89-04

WOLF CREEK NUCLEAR OPERATING CORPORATION
IST DESIGN BASIS DOCUMENT
VALVE DATA SHEET

ALTRAN
CALC NO. 96227TR01 REV. D
ATT. APPX D SHEET D10

VALVE ID: EFHV0041

DESCRIPTION: ESW A TO SERVICE WATER SYS
P&ID M-12EF02(Q) COORD: E-3 CODE CLASS: 3 NORMAL POS: O/T
VALVE TYPE: BTF ACTUATOR TYPE: MO SIZE: 30 Category: B Active

SAFE FUNCTION(S):

OPEN: None.

CLOSE: Closes on SIS or Loss of Offsite Power signal to direct heated ESW Train A discharge flow to the Ultimate Heat Sink via the safety-related ESW header.

TEST TYPE	REQ'D	TEST PROCEDURE	FREQUENCY	RELIEF REQUEST
LEAK RATE TEST	N	N/A	N/A	N/A
EXERCISE-OPEN	N	N/A	N/A	N/A
EXERCISE-CLOSED	Y	STS EF-201A	Q	N/A
STROKE TIME OPEN	N	N/A	N/A	N/A
STROKE TIME CLOSED	Y	STS EF-201A	Q	N/A
FAIL-SAFE	N	N/A	N/A	N/A
RELIEF SETPOINT	N	N/A	N/A	N/A
REMOTE POSITION IND	Y	STS EF-201A	2Y	N/A

ACCEPTANCE CRITERIA:

Max.Closing Time: 30 sec.

BASIS OF ACCEPTANCE CRITERIA:

Maximum allowable stoke time from E-025-00007: 30.0 sec.

PHYSICAL DATA

MANUFACTURER: JAMESBURY MODEL NO: 8226-EX ANSI #: 150
LOCATION: CTRL ROOM: 3101 ELEVATION: 1976
LINE NUMBER: 082-HBC-30" DESIGN PRESSURE/TEMP: 200/ 185
VENDOR DRAWING: M-235-00004 POWER SUPPLY: NG01A

REMARKS:

Less safety significant. Valve operation is verified during SIS actuation test and quarterly pump test. Valve is normally throttled and could be in a wide range of positions when required to close. Refer to P&ID, Note 12.

REFERENCES:

USAR: 9.2.1
TECH SPECS: 3.7.4
OTHER: OM-10; GL 89-04

WOLF CREEK NUCLEAR OPERATING CORPORATION
IST DESIGN BASIS DOCUMENT
VALVE DATA SHEET

ALTRAN
CALC NO. 96227-TR01 REV. 0
ATT. APPX D SHEET D11

VALVE ID: EFHV0042

DESCRIPTION: ESW B TO SERVICE WATER SYS ISO
P&ID M-12EF02(Q) COORD: D-3 CODE CLASS: 3 NORMAL POS: O/T
VALVE TYPE: BTF ACTUATOR TYPE: MO SIZE: 30 Category: B Active

SAFE FUNCTION(S):

OPEN: None.

CLOSE: Closes on SIS or Loss of Offsite Power signal to direct heated ESW Train B discharge flow to the Ultimate Heat Sink via the safety-related ESW header.

TEST TYPE	REQ'D	TEST PROCEDURE	FREQUENCY	RELIEF REQUEST
LEAK RATE TEST	N	N/A	N/A	N/A
EXERCISE-OPEN	N	N/A	N/A	N/A
EXERCISE-CLOSED	Y	STS EF-201B	Q	N/A
STROKE TIME OPEN	N	N/A	N/A	N/A
STROKE TIME CLOSED	Y	STS EF-201B	Q	N/A
FAIL-SAFE	N	N/A	N/A	N/A
RELIEF SETPOINT	N	N/A	N/A	N/A
REMOTE POSITION IND	Y	STS EF-201B	2Y	N/A

ACCEPTANCE CRITERIA:

Max.Closing Time: 30 sec.

BASIS OF ACCEPTANCE CRITERIA:

Maximum allowable stroke time from E-025-00007: 30.0 sec.

PHYSICAL DATA

MANUFACTURER: JAMESBURY MODEL NO: 8226-EX ANSI #: 150
LOCATION: CTRL ROOM: 3101 ELEVATION: 1976
LINE NUMBER: 139-HBC-30" DESIGN PRESSURE/TEMP: 200/ 185
VENDOR DRAWING: M-235-00004 POWER SUPPLY: NG01A

REMARKS:

Less safety significant. Valve operation is verified during SIS actuation test and quarterly pump test. Valve is normally throttled and could be in a wide range of positions when required to close. Refer to P&ID, Note 12.

REFERENCES:

USAR: 9.2.1
TECH SPECS: 3.7.4
OTHER: OM-10; GL 89-04

ALTRAN

CALC NO. 96227TR01 REV. 0

ATT. APPX D SHEET D12

Telcon with Bill Selbe (WCNOC)
11/21/96

(1) HV-49 and HV-50 are throttled to 21% and 22% respectively.
(2) A and B train LOCA flow rates last set to 2470 and 2730 gpm respectively; 2000 gpm per train required.
(3) Use of faulted allowable stresses acceptable for design for LOCA hammer.
(4) One lake with partial height dam for ESW portion. Max level 1988 ft; normal level 1987 ft.

MZ
Matt Zweigle (Altran)
11/21/96

ALTRAN

CALC NO. 96227-TR01 REV. 0

ATT. APPX D SHEET D13

SERVICE: Containment Coolers

Mode of Operation: Post-accident

EQUIPMENT NO. SGN01A, SGN01B, SGN01C, SGN01D

PERFORMANCE: (1 SHELL)	SHELL SIDE	TUBE SIDE
FLUID	Steam-Air Mixture	Water
FLUID QUANT. ENTERING	67000 CFM	2000 GPM
PARTIAL STM.PRES. PSIA	* 46.90	–
PARTIAL AIR PRES. PSIA	* 18.00	–
TOTAL MIXTURE PRES. PSIA	* 64.9	–
MIXTURE COMBINATION LB/STM	0.63	–
SPECIFIC HEAT (Cp) BTU/LB/°F	0.3986	–
VISCOSITY C.P.	0.0243 AT 320 °F	0.999 At 95°F
SPECIFIC WEIGHT	0.173 AT 320 °F	0.72 AT 95 °F
	*: @ 277°F	62.11 AT 95 °F
Specific Heat(Cv)BTU/LB/°F	0.3564 @ 277°F	
VELOCITY (MAX) FT/SEC.	12 (Face)	12
VELOCITY (ACTUAL)	7.8	6.5
PRESSURE DROP (ACTUAL)	0.94 In. w.g.	15.0
PRESSURE DROP. (MAX)	In.wg	28 psig
FOULING FACTOR	–	0.002
TEMPERATURE IN - °F	277	95
TEMPERATURE OUT - °F	259.8	206.3
HEAT EXCHANGED - BTU/HR:	104 x 10^6 (min)	
TRANSFER AREA: GROSS -	107.1×10^6 CLEAN +20% SQ.FT.: EFFECTIVE	FOULING FACTOR-Tube-side 0.002 SQ.FT.:
DESIGN PRESSURE - PSIG.	70	200
TEST PRESSURE - PSIG.	–	300 (Hydrostatic)
DESIGN TEMPERATURE - °F	320	210

TUBES - O.D. 5/8"(min.) BWG 20(min.) LENGTH PITCH

FINS SIZE SPACING TYPE Plate ATTACHMENT Mechanical

COIL - SIZE

NO. OF ROWS

CONNECTIONS Steel Flanges A-181 or A-105

CODES AND STANDARDS APPLIED ASME BOILER AND PRESSURE VESSEL CODE SECT. III

WEIGHT: DRY: lbs (ea) FLOODED: lbs (ea) OPERATING: lbs (ea) BUNDLE ONLY: lbs

PART	MATERIAL	PART	MATERIAL
TUBES	90/10 Copper Nickel	Prot. Screen	Gal.Steel. No. 1 Wire Mesh
FINS	Copper		
HEADER	90/10 Copper Nickel SB-466		
CASING	Galvanized Steel		
MANIFOLD	Carbon Steel SA-106		
DRIP PAN	Galvanized Steel		

MANUFACTURER

MODEL

PURCHASE ORDER NO. 10466-M-620

REFERENCE DWG. NO.

LOCATION DWG. NO:

P.&I. DIAGRAM NO.

REMARKS: COIL IS LOCATED ON FAN SUCTION SIDE. THE COILS ARE ALSO SIZED FOR 70.7 X 10^6 BTU/HR WITH A REDUCED WATER FLOW OF 1000 GPM. THE ACTUAL REQUIRED DUTY WITH A WATER FLOW OF 1000 GPM IS 48.2 X 10^6 BTU/HR.

M-620-00053-W02

COOLING COIL DATA SHEET
APPENDIX A - SHEET 3

• SNUPPS

10466

10466-M-620

7

GES appearing
rds, and that
cedures, policies
original records
lm to assure

Portions of this Document were externally generated and are the best copies available.
This Document is considered acceptable as-is for processing as a QA Record per review performed by LDS date 7/3/92

PUMP CURVE PEF01B, DESIGN

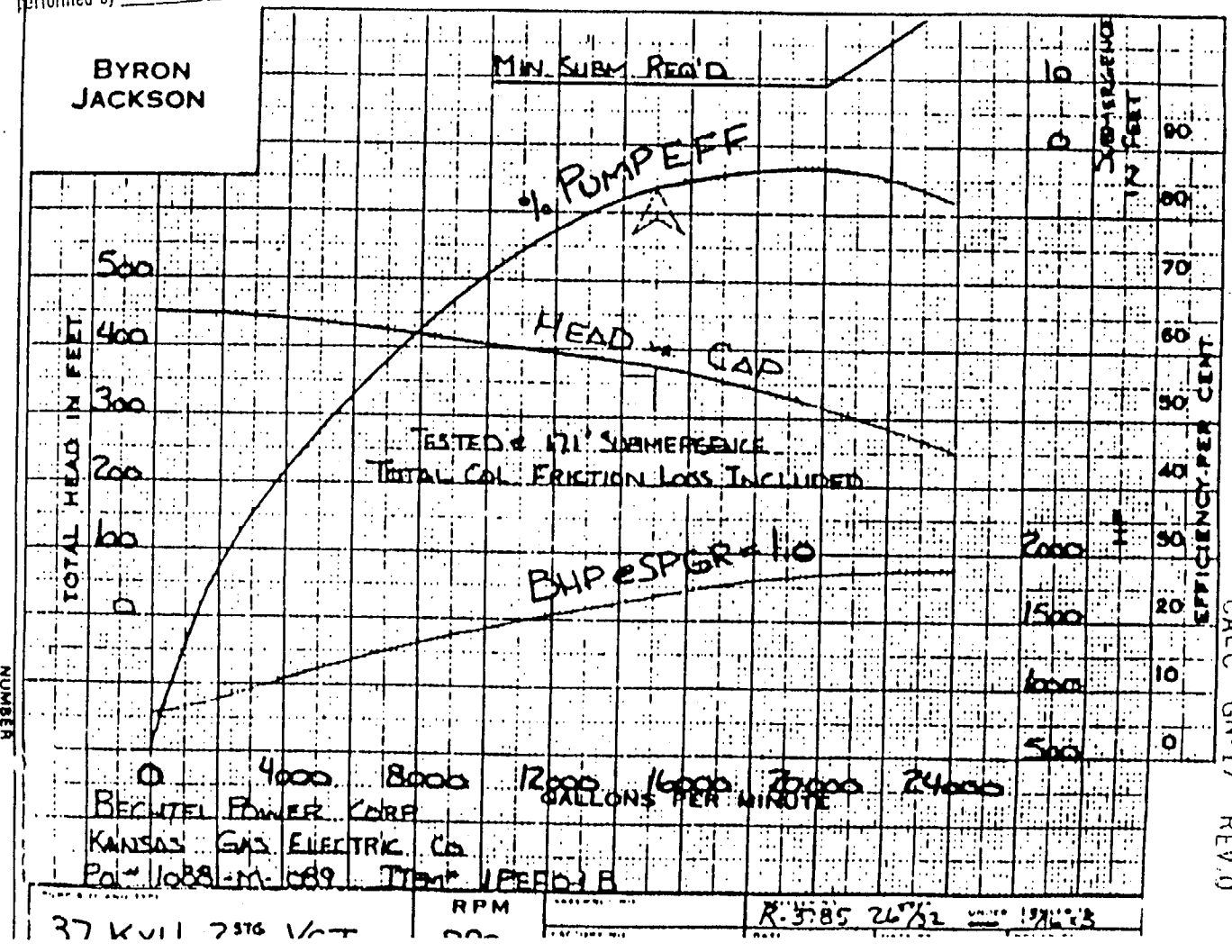

SYSTEM DESCRIPTION
ESSENTIAL SERVICE WATER SYSTEM
WOLF CREEK

NUMBER 10466-M-10EF(Q) Rev 0
SHEET 14 OF 22

Altran Report 9622-SR-01 Rev. 0
Att./Appx. D Sh D14

Attachment B to Calculation No. 0096-020-CALC-0
Calculation Revision No. 0
Sheet 17 of 41

CALC GN-17 REV.0