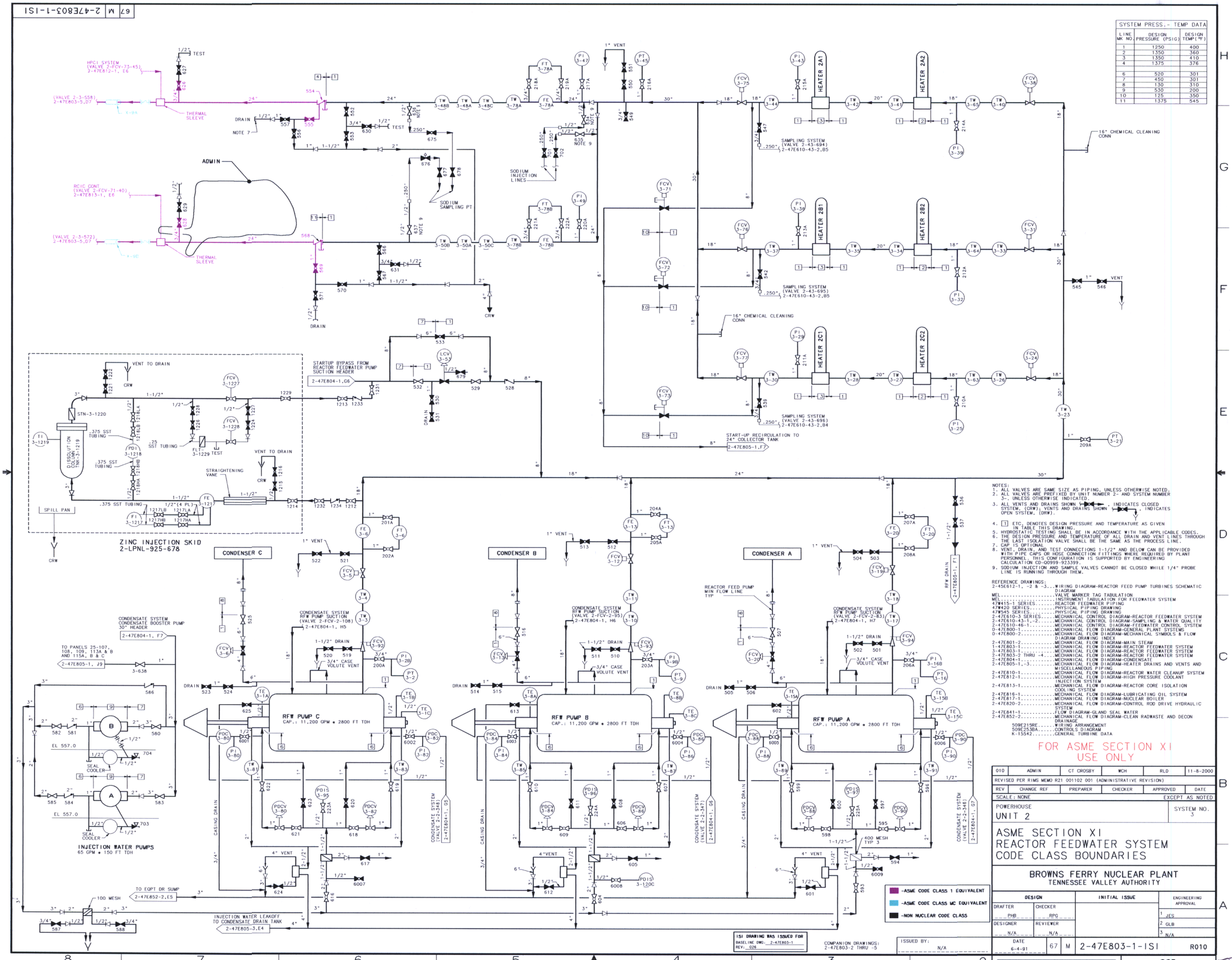

SYSTEM PRESS.- TEMP DATA		
LINE MK NO.	DESIGN PRESSURE (PSIG)	DESIGN TEMP(°F)
1	1250	400
2	1350	360
3	1350	410
4	1375	376
6	520	301
7	450	301
8	130	310
9	530	200
10	125	350
11	1375	545

NOTES:
1. ALL VALVES ARE SAME SIZE AS PIPING, UNLESS OTHERWISE NOTED.
2. ALL VALVES ARE PREFIXED BY UNIT NUMBER 2- AND SYSTEM NUMBER 3-, UNLESS OTHERWISE INDICATED.
3. ALL VENTS AND DRAINS SHOWN ⊢⋈⊣, INDICATES CLOSED SYSTEM, (CRW); VENTS AND DRAINS SHOWN ⋈, INDICATES OPEN SYSTEM, (DRW).
4. [1] ETC, DENOTES DESIGN PRESSURE AND TEMPERATURE AS GIVEN IN TABLE THIS DRAWING.
5. HYDROSTATIC TESTING SHALL BE IN ACCORDANCE WITH THE APPLICABLE CODES.
6. THE DESIGN PRESSURE AND TEMPERATURE OF ALL DRAIN AND VENT LINES THROUGH THE LAST ISOLATION VALVE SHALL BE THE SAME AS THE PROCESS LINE.
7. CAP IS OPTIONAL.
8. VENT, DRAIN, AND TEST CONNECTIONS 1-1/2" AND BELOW CAN BE PROVIDED WITH PIPE CAPS OR HOSE CONNECTION FITTINGS WHERE REQUIRED BY PLANT PERSONNEL. THIS CONFIGURATION IS SUPPORTED BY ENGINEERING CALCULATION CD-00999-923399.
9. SODIUM INJECTION AND SAMPLE VALVES CANNOT BE CLOSED WHILE 1/4" PROBE LINE IS RUNNING THROUGH THEM.

REFERENCE DRAWINGS:
2-45E612-1, -2 & -3....WIRING DIAGRAM-REACTOR FEED PUMP TURBINES SCHEMATIC DIAGRAM
MEL.....VALVE MARKER TAG TABULATION
MEL.....INSTRUMENT TABULATION FOR FEEDWATER SYSTEM
47W415-1 SERIES.....REACTOR FEEDWATER PIPING
47W420 SERIES.....PHYSICAL PIPING DRAWING.
47W545 SERIES.....PHYSICAL PIPING DRAWING
2-47E610-3 SERIES....MECHANICAL CONTROL DIAGRAM-REACTOR FEEDWATER SYSTEM
2-47E610-43-1,-2.....MECHANICAL CONTROL DIAGRAM-SAMPLING & WATER QUALITY
2-47E610-46-1.....MECHANICAL CONTROL DIAGRAM-FEEDWATER CONTROL SYSTEM
0-47E800-1.....MECHANICAL FLOW DIAGRAM-GENERAL PLANT SYSTEMS
0-47E800-2.....MECHANICAL FLOW DIAGRAM-MECHANICAL SYMBOLS & FLOW DIAGRAM DRAWING INDEX
2-47E801-2.....MECHANICAL FLOW DIAGRAM-MAIN STEAM
1-47E803-1.....MECHANICAL FLOW DIAGRAM-REACTOR FEEDWATER SYSTEM
3-47E803-1.....MECHANICAL FLOW DIAGRAM-REACTOR FEEDWATER SYSTEM
2-47E803-2 THRU -4....MECHANICAL FLOW DIAGRAM-REACTOR FEEDWATER SYSTEM
2-47E804-1.....MECHANICAL FLOW DIAGRAM-CONDENSATE
2-47E805-1,-3.....MECHANICAL FLOW DIAGRAM-HEATER DRAINS AND VENTS AND MISCELLANEOUS PIPING
2-47E810-1.....MECHANICAL FLOW DIAGRAM-REACTOR WATER CLEANUP SYSTEM
2-47E812-1.....MECHANICAL FLOW DIAGRAM-HIGH PRESSURE COOLANT INJECTION SYSTEM
2-47E813-1.....MECHANICAL FLOW DIAGRAM-REACTOR CORE ISOLATION COOLING SYSTEM
2-47E816-1.....MECHANICAL FLOW DIAGRAM-LUBRICATING OIL SYSTEM
2-47E817-1.....MECHANICAL FLOW DIAGRAM-NUCLEAR BOILER
2-47E820-2.....MECHANICAL FLOW DIAGRAM-CONTROL ROD DRIVE HYDRAULIC SYSTEM
2-47E841-1.....FLOW DIAGRAM-GLAND SEAL WATER
2-47E852-2.....MECHANICAL FLOW DIAGRAM-CLEAN RADWASTE AND DECON DRAINAGE
509E215RE.....WIRING ARRANGEMENT
509E253BA.....CONTROLS DIAGRAM
K-15542.....GENERAL TURBINE DATA

FOR ASME SECTION XI USE ONLY

REV	CHANGE REF	PREPARER	CHECKER	APPROVED	DATE
010	ADMIN	CT CROSBY	WCH	RLD	11-8-2000
REVISED PER RIMS MEMO R21 001102 001 (ADMINISTRATIVE REVISION).					

SCALE: NONE — EXCEPT AS NOTED

POWERHOUSE UNIT 2 — SYSTEM NO. 3

ASME SECTION XI REACTOR FEEDWATER SYSTEM CODE CLASS BOUNDARIES

BROWNS FERRY NUCLEAR PLANT
TENNESSEE VALLEY AUTHORITY

DESIGN		INITIAL ISSUE	ENGINEERING APPROVAL
DRAFTER PHB	CHECKER RPG		1 JES
DESIGNER N/A	REVIEWER N/A		2 GLB
			3 N/A

ISI DRAWING WAS ISSUED FOR BASELINE DWG.: 2-47E803-1 REV.: 026

COMPANION DRAWINGS: 2-47E803-2 THRU -5

ISSUED BY: N/A

DATE 6-4-91 | 67 | M | 2-47E803-1-ISI | R010

CAD MAINTAINED DRAWING — CCD

D-13