ENCLOSURE 1

ATTACHMENT C

BFN Unit 2

ASME Section XI
ISI Program Plan

Third Interval

Bolting, Nozzle,
and Weld Drawings

BFN Unit 2, Bolting Nozzle, and Weld Drawings

2-ISI-0031-C, Sheet 1
ISI-0040-C, Sheets 1 and 2
2-ISI-0103-C, Sheets 1 and 2
2-ISI-0128-C, Sheets 1 thru 3
2-ISI-0129-C, Sheet 1
2-ISI-0221-C, Sheets 1 and 2
2-ISI-0222-C, Sheets 1 thru 4
ISI-0266-C, Sheet 1
2-ISI-0269-C, Sheet 1
2-ISI-0270-C, Sheets 1 and 2
2-ISI-0271-C, Sheet 1
2-ISI-0272-C, Sheets 1 thru 3
2-ISI-0273-C, Sheet 1
2-ISI-0292-C, Sheets 1 and 2
2-ISI-0312-B, Sheet 1
ISI-0316-A, Sheet 1
ISI-0343-A, Sheet 1
ISI-0347-B, Sheet 1
ISI-0351-A, Sheet 1
2-ISI-0380-C, Sheet 1
2-ISI-0383-C, Sheets 1 and 2
2-ISI-0406-C, Sheet 1
2-ISI-0407-C, Sheet 1
ISI-0408-C, Sheet 1
2-ISI-0410-C, Sheet 1
ISI-0444-C, Sheet 1
CHM-1090-A, Sheet 1
CHM-1091-A, Sheet 1
CHM-1094-A, Sheets 1 thru 7
CHM-1095-A, Sheets 1 thru 5
2-CHM-2046-C, Sheets 1 and 2
2-MSG-0018-C, Sheets 1 thru 12
2-MSG-0021-C, Sheets 1 and 2

REFERENCE DRAWINGS
47N2054 R1
GE73-D-160-01
ISI-0032-C (SH. 1) SUPPORT LOCATIONS

MATERIAL SPECIFICATIONS
8" X .322" NOM. WALL THK. SCH. 40 CS

ASME CC-2 (EQUIVALENT)

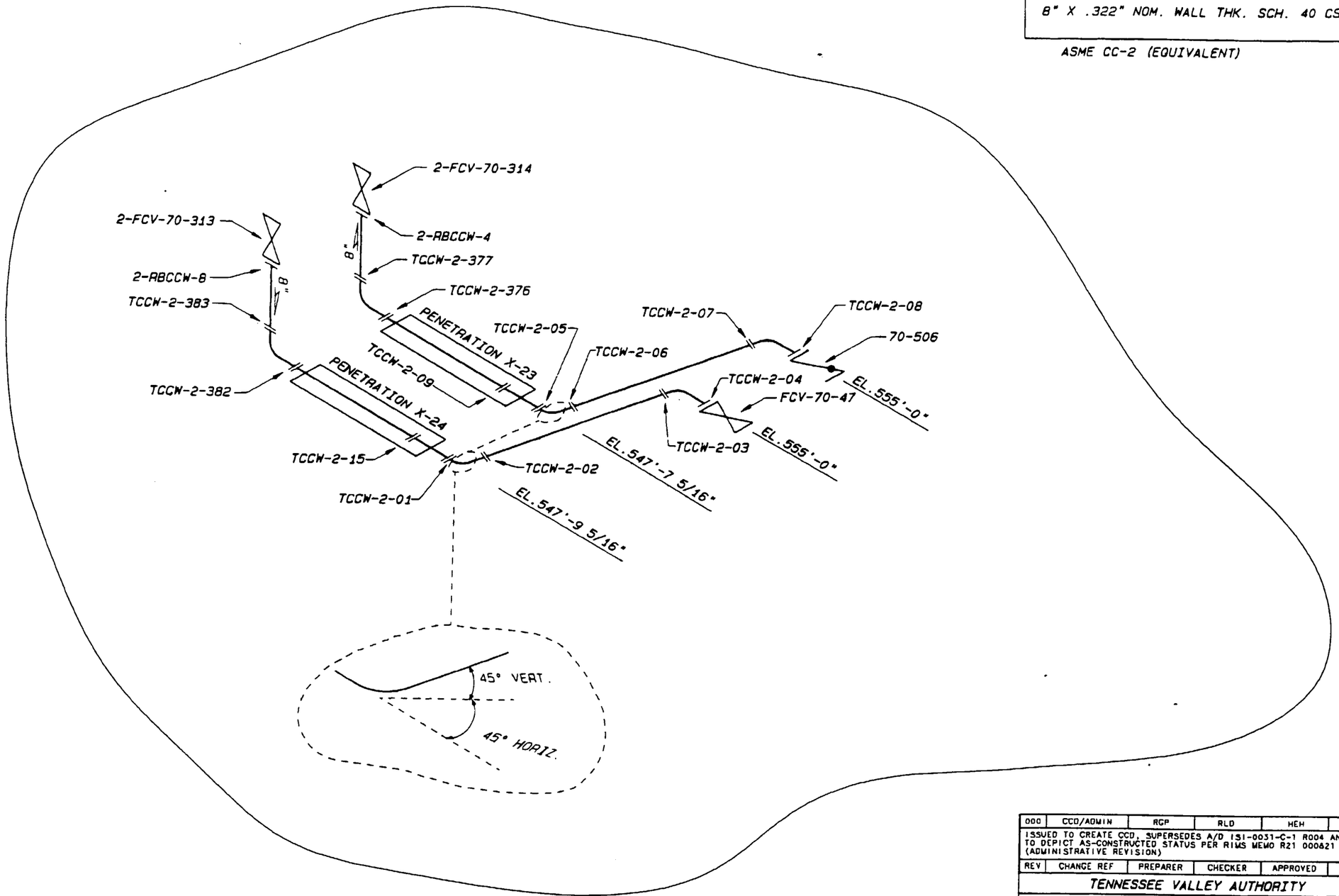

Information Only

ALL A/D HISTORY RESEARCHED TO R000

000	CCD/ADMIN	RGP	RLD	HEH	

ISSUED TO CREATE CCD, SUPERSEDES A/D 1S1-0031-C-1 R004 AND TO DEPICT AS-CONSTRUCTED STATUS PER RIMS MEMO R21 000621 001 (ADMINISTRATIVE REVISION)

REV	CHANGE REF	PREPARER	CHECKER	APPROVED	DATE

TENNESSEE VALLEY AUTHORITY

BROWNS FERRY NUCLEAR PLANT
UNIT #2
CLOSED COOLING WATER SYSTEM
WELD LOCATIONS

DRAWN: KEV	SUBMITTED	APPROVED	SCALE: NTS
DATE: 10-23-87	DATE:	DATE:	SHEET 01 OF 01 SHEET(S)
CHECKED: JTL		GLB	DRAWING NO. / REV
DATE:			2-1S1-0031-C / 000

CAD MAINTAINED DRAWING

CCD

REFERENCE DRAWINGS
47W2468 SERIES
IBI-0041-C (SH. 1) SUPPORT MAP

MATERIAL SPECIFICATIONS
ASME CC-2 (EQUIVALENT)
PIPE
SA 106 Gr. B
6" SCH. 80 0.432" NOM WALL THK
FITTINGS
SA 234 Gr. WPB
6" SCH. 80
TANK
SA 106 Gr. B or SA 333 Gr.6
12" SCH 80 0.688" NOM WALL THK

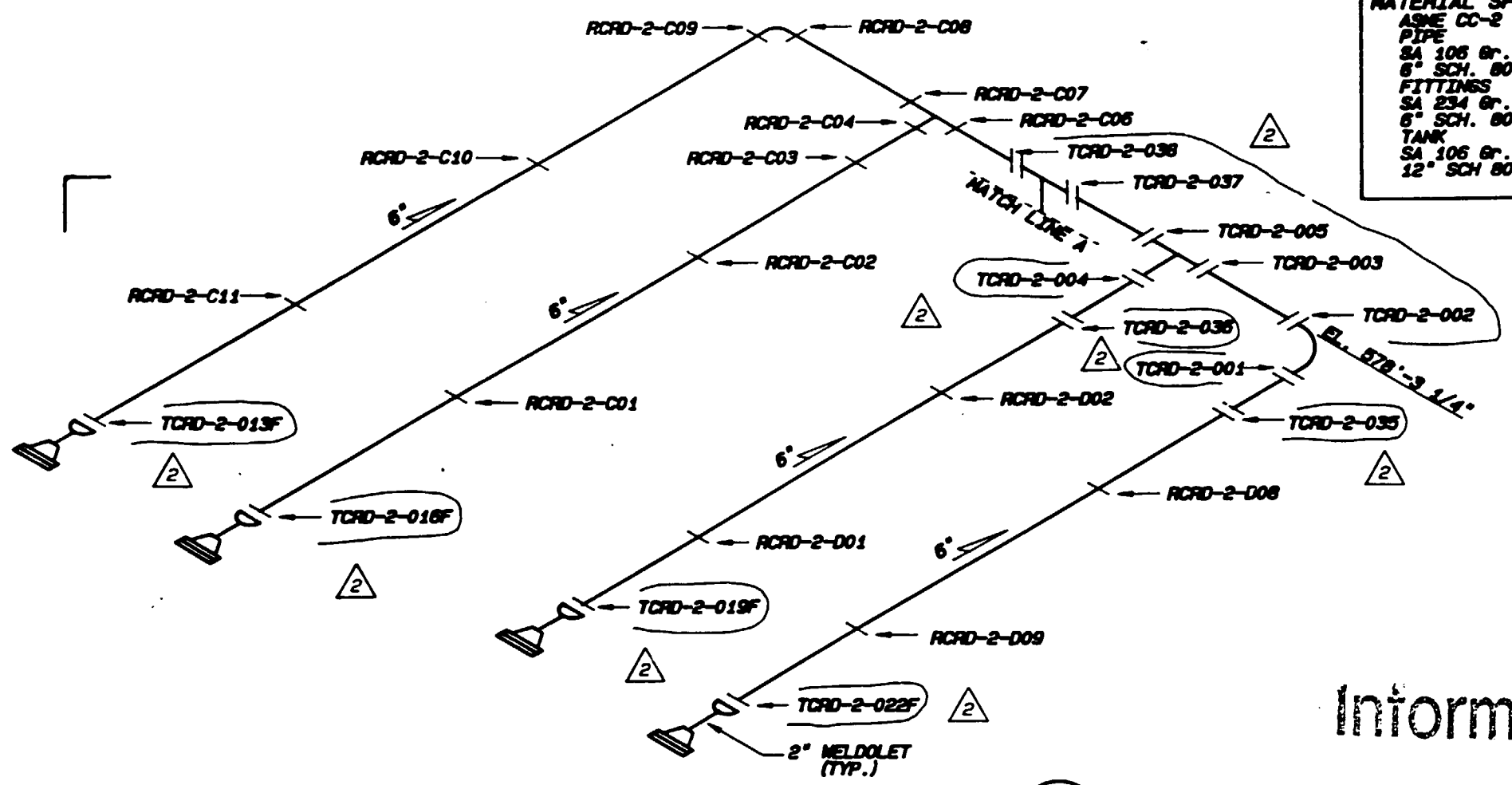

EAST HEADER

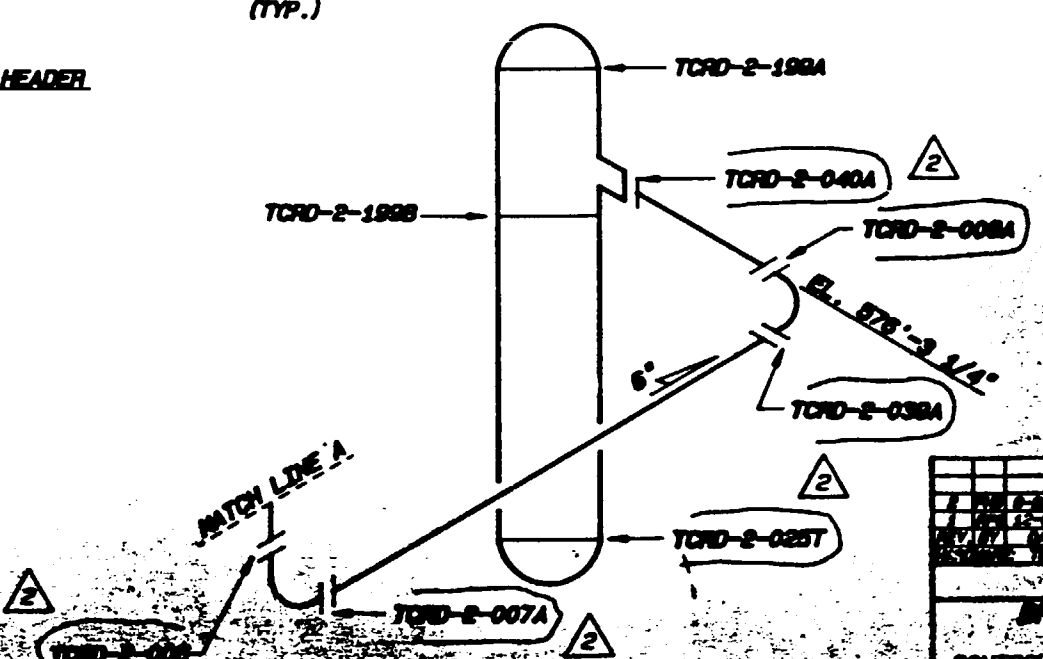

SCRAM DISCHARGE INSTRUMENT VOLUME TANK

TENNESSEE VALLEY AUTHORITY
BROWNS FERRY NUCLEAR PLANT
UNIT 2
CONTROL ROD DRIVE SCRAM DISCHARGE SYSTEM
WELD LOCATIONS
EDC
BLB

Information Only

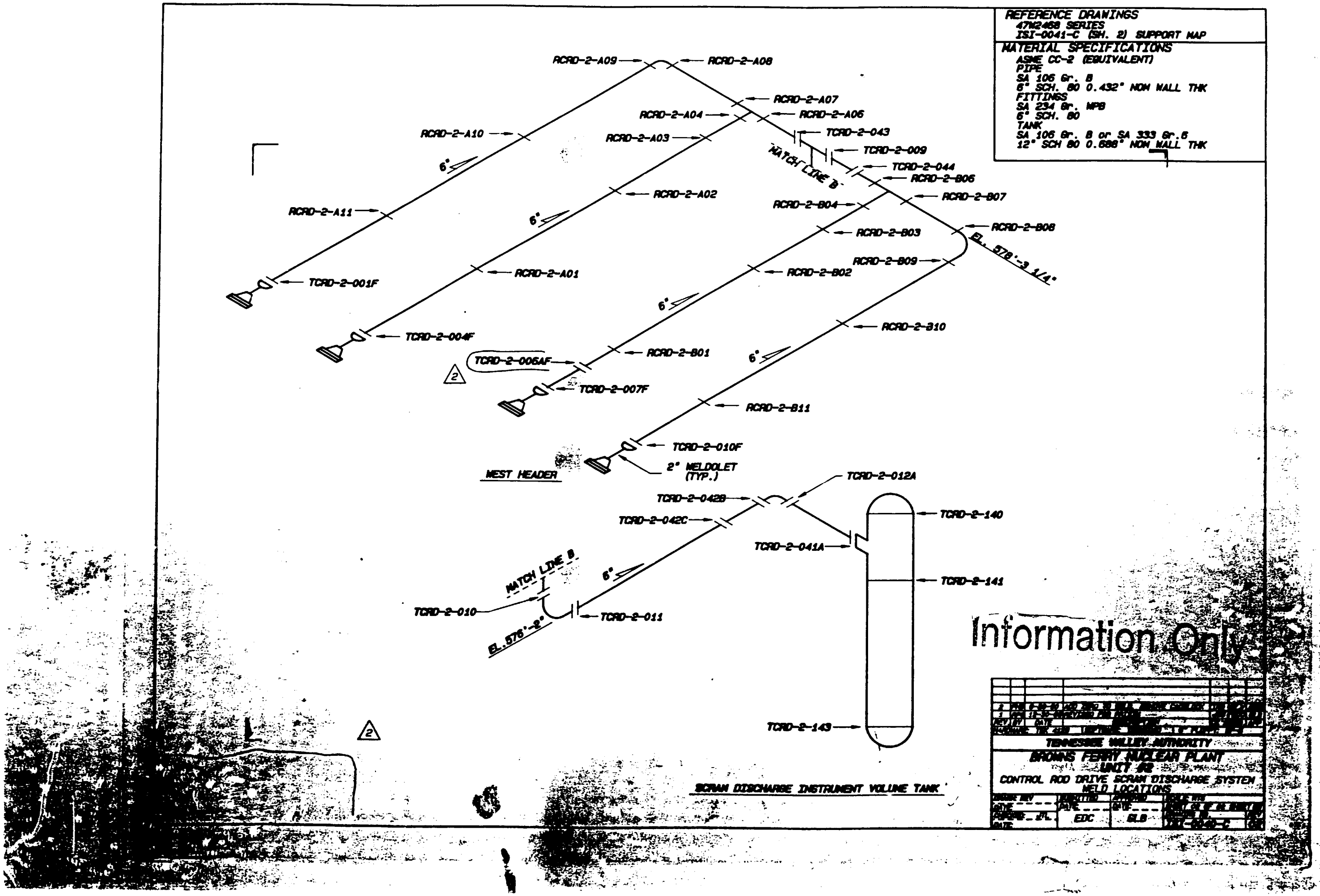
REFERENCE DRAWINGS
47W2468 SERIES
ISI-0041-C (SH. 2) SUPPORT MAP
MATERIAL SPECIFICATIONS
ASME CC-2 (EQUIVALENT)
PIPE
SA 106 Gr. B
6" SCH. 80 0.432" NOM WALL THK
FITTINGS
SA 234 Gr. WPB
6" SCH. 80
TANK
SA 106 Gr. B or SA 333 Gr.6
12" SCH 80 0.688" NOM WALL THK
RCRD-2-A09
RCRD-2-A08
RCRD-2-A07
RCRD-2-A04
RCRD-2-A06
RCRD-2-A10
RCRD-2-A03
TCRD-2-043
TCRD-2-009
MATCH LINE B
TCRD-2-044
RCRD-2-B06
RCRD-2-A02
RCRD-2-B07
RCRD-2-A11
RCRD-2-B04
RCRD-2-B08
RCRD-2-B03
EL. 578'-3 1/4"
RCRD-2-B09
RCRD-2-A01
RCRD-2-B02
TCRD-2-001F
RCRD-2-B10
TCRD-2-004F
RCRD-2-B01
TCRD-2-006AF
TCRD-2-007F
RCRD-2-B11
TCRD-2-010F
2" WELDOLET (TYP.)
WEST HEADER
TCRD-2-012A
TCRD-2-042B
TCRD-2-042C
TCRD-2-140
TCRD-2-041A
TCRD-2-141
MATCH LINE B
TCRD-2-010
TCRD-2-011
EL. 576'-2"
TCRD-2-143
SCRAM DISCHARGE INSTRUMENT VOLUME TANK
Information Only
TENNESSEE VALLEY AUTHORITY
BROWNS FERRY NUCLEAR PLANT
UNIT #2
CONTROL ROD DRIVE SCRAM DISCHARGE SYSTEM
WELD LOCATIONS
EDC
GLB

REFERENCE DRAWINGS:
47W335-15
ISI-0105-C (SH. 1) SUPPORT MAP

NOTE:

1. PIPE SEGMENT LONGITUDINAL SEAMS WILL BE IDENTIFIED AS:

(BASE WELD) -LS-D (DOWNSTREAM)
(BASE WELD) -LS-U (UPSTREAM)

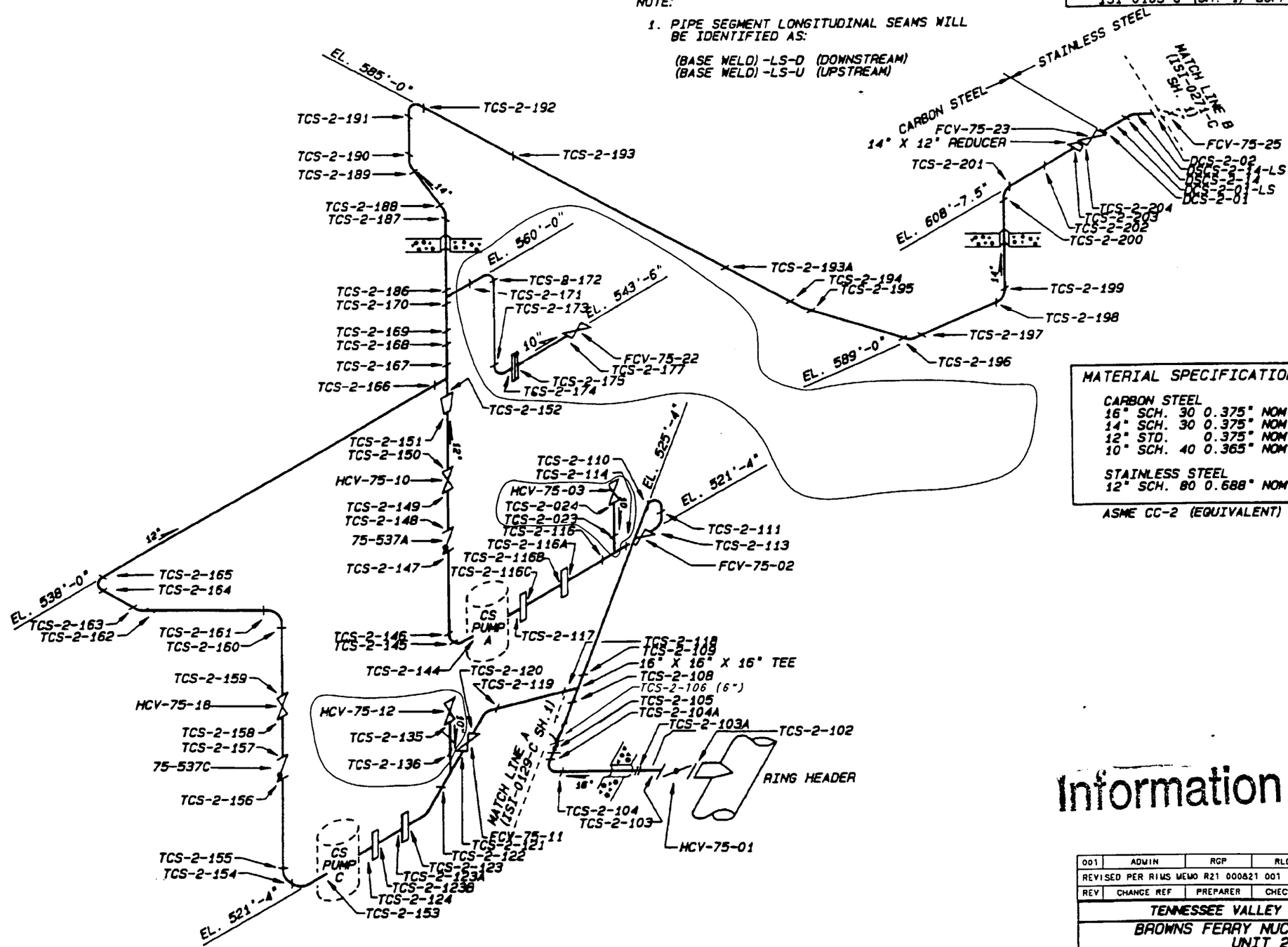

MATERIAL SPECIFICATIONS

CARBON STEEL
16" SCH. 30 0.375" NOM. WALL THK.
14" SCH. 30 0.375" NOM. WALL THK.
12" STD. 0.375" NOM. WALL THK.
10" SCH. 40 0.365" NOM. WALL THK.

STAINLESS STEEL
12" SCH. 80 0.688" NOM. WALL THK.

ASME CC-2 (EQUIVALENT)

Information Only

001	ADMIN	RGP	RLD	HEH	
REVISED PER RIMS MEMO R21 000821 001					
REV	CHANGE REF	PREPARER	CHECKER	APPROVED	DATE

TENNESSEE VALLEY AUTHORITY

BROWNS FERRY NUCLEAR PLANT
UNIT 2
CORE SPRAY SYSTEM
WELD LOCATIONS

DRAWN: REV
DATE: 12-6-83
CHECKED: JTL
DATE:
SUBMITTED
DATE:
APPROVED
DATE:
6LB
SCALE: NTS
SHEET 1 OF 2 SHEET(S)
DRAWING NO. 2-ISI-0103-C
REV 001

ALL A/D HISTORY RESEARCHED TO R000

CAD MAINTAINED DRAWING

CCD

REFERENCE DRAWINGS:
47W458 SERIES
47W335-15
ISI-0105-C (SH. 2) SUPPORT MAP

MATERIAL SPECIFICATIONS
ASME CC-2 (EQUIVALENT)
CARBON STEEL
16" SCH 30 0.375" NOM. WALL THK.
14" SCH 30 0.375" NOM. WALL THK.
12" STD. 0.375" NOM. WALL THK.
10" SCH. 40 0.365" NOM. WALL THK

STAINLESS STEEL
12" SCH. 80 0.688" NOM. WALL THK.

NOTE:

1. PIPE SEGMENT LONGITUDINAL SEAMS WILL BE IDENTIFIED AS:

(BASE WELD)-LS-D (DOWNSTREAM)
(BASE WELD)-LS-U (UPSTREAM)

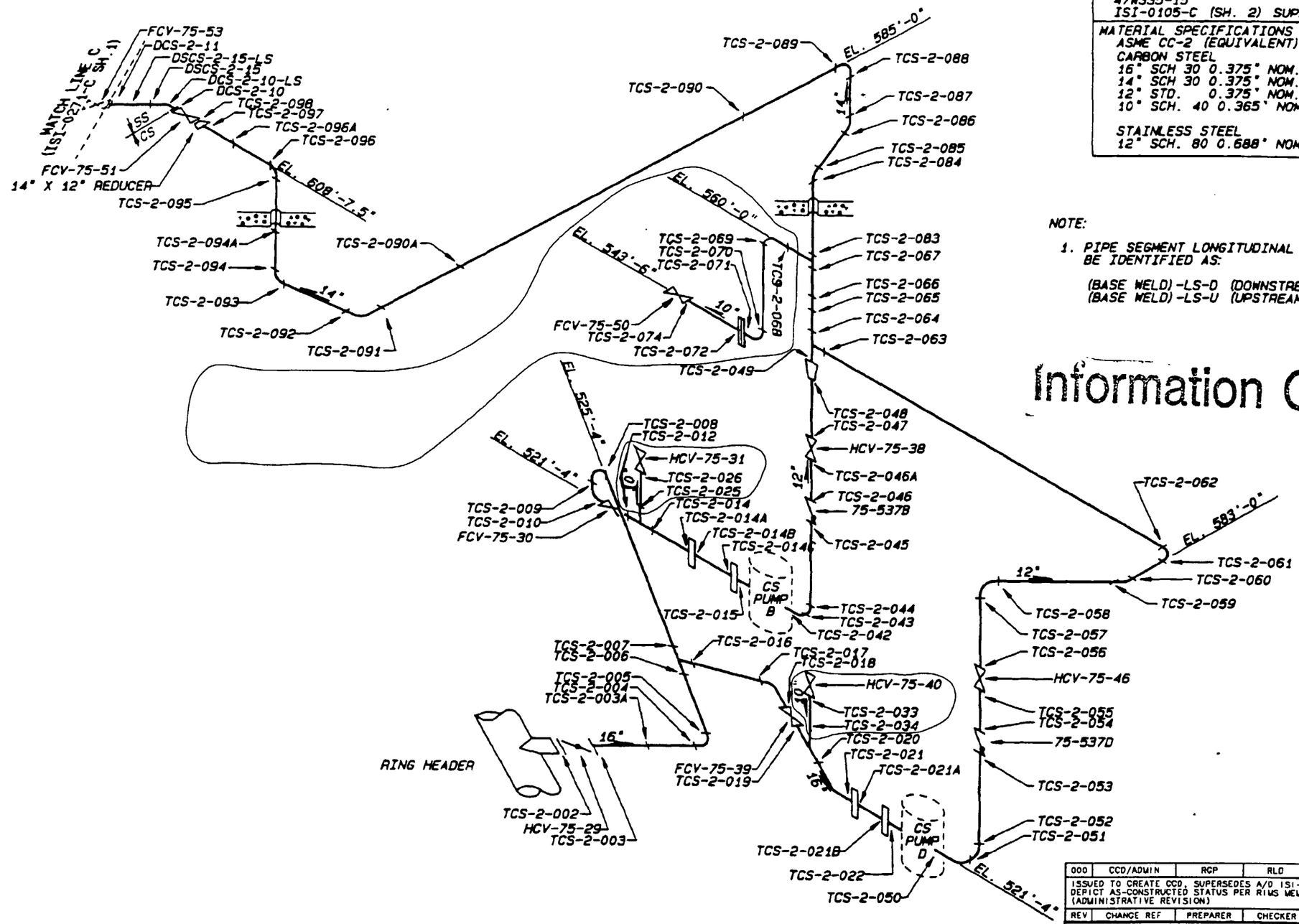

Information Only

000	CCD/ADMIN	RCP	RLD	HEH	
ISSUED TO CREATE CCD. SUPERSEDES A/D ISI-0103-C-2 R006 AND TO DEPICT AS-CONSTRUCTED STATUS PER RIMS MEMO R21 000821 001 (ADMINISTRATIVE REVISION)					
REV	CHANGE REF	PREPARER	CHECKER	APPROVED	DATE

TENNESSEE VALLEY AUTHORITY

BROWNS FERRY NUCLEAR PLANT
UNIT 2
CORE SPRAY SYSTEM
WELD LOCATIONS

DRAWN REV	SUBMITTED	APPROVED	SCALE: NTS
DATE: 12-9-93	DATE:	DATE:	SHEET 2 OF 2 SHEET(S)
CHECKED: JTL		GLB	DRAWING NO. 2-ISI-0103-C REV 000
DATE:			

ALL A/D HISTORY RESEARCHED TO R000

CAD MAINTAINED DRAWING

CCD

REFERENCE DRAWINGS
47W455-H SERIES
47W335-10, 12
ISI-0130-C (SH. 1) SUPPORT MAP

MATERIAL SPECIFICATIONS
CARBON STEEL
24" SCH 20 (0.375" NOM WALL THK)
20" SCH 20 (0.375" NOM WALL THK)
10" SCH 80 (0.593" NOM WALL THK)
ASME CC-2 (EQUIVALENT)

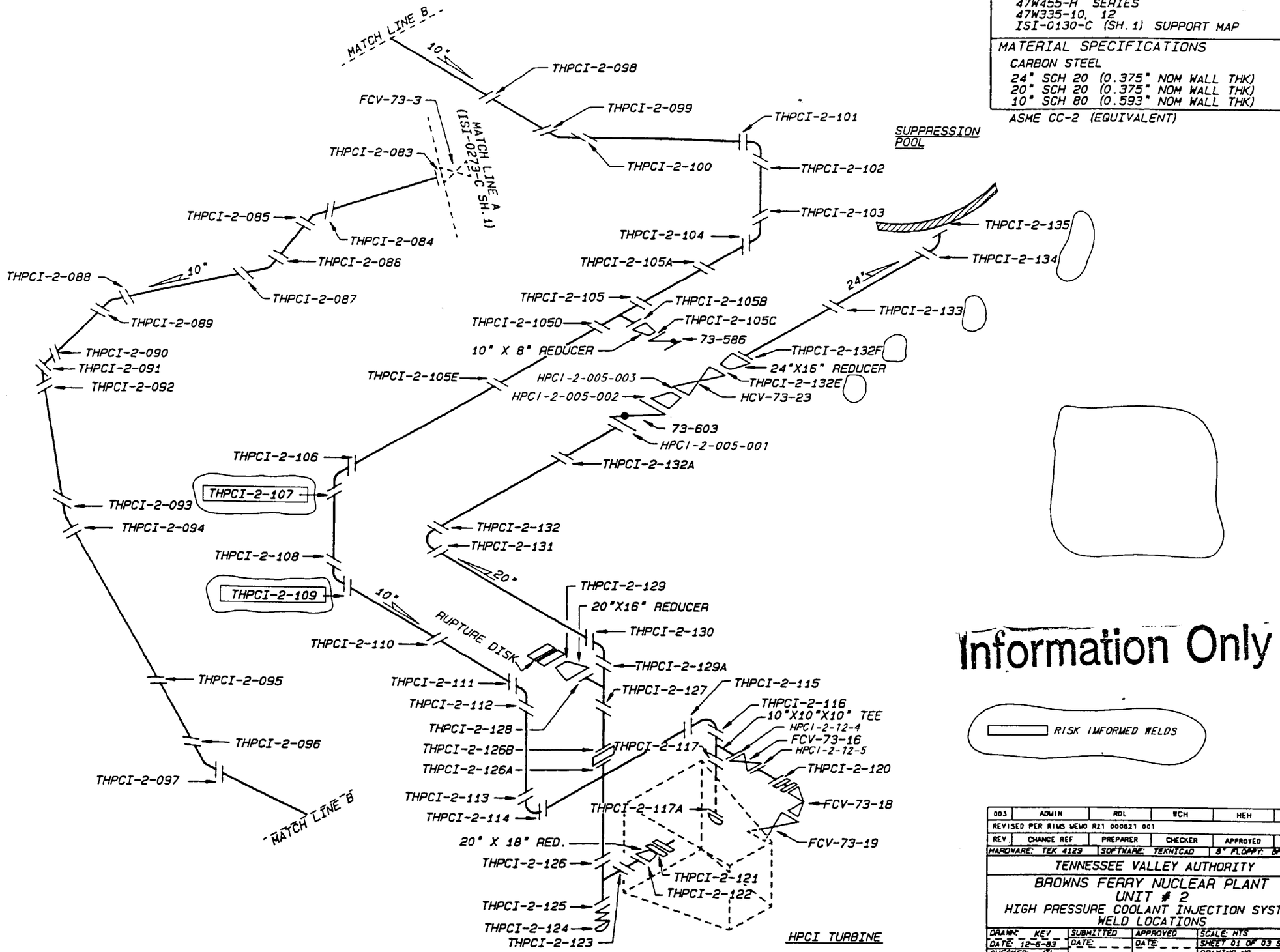

Information Only

MF
RS

003	ADMIN	RDL	WCH	HEH	
REVISED PER RIMS MEMO R21 000821 001					
REV.	CHANGE REF	PREPARER	CHECKER	APPROVED	DATE
HARDWARE: TEK 4129		SOFTWARE: TEKNICAD		8" FLOPPY: DF-8	

TENNESSEE VALLEY AUTHORITY
BROWNS FERRY NUCLEAR PLANT
UNIT # 2
HIGH PRESSURE COOLANT INJECTION SYSTEM
WELD LOCATIONS

DRAWN: KEV	SUBMITTED	APPROVED	SCALE: NTS
DATE: 12-6-83	DATE:	DATE:	SHEET 01 OF 03 SHEET(S)
CHECKED: JTL		GLB	DRAWING NO. 2-ISI-0128-C — REV 003
DATE:			

CAD MAINTAINED DRAWING

CCD

ALL A/D HISTORY RESEARCHED AT R000

REFERENCE DRAWINGS
(47W335-9, 11)
ISI-0130-C (SH. 2) SUPPORT MAP

MATERIAL SPECIFICATIONS
CARBON STEEL
16" x .375" NOM. WALL THK. SCH 30
14" x .938" NOM. WALL THK. SCH 100
14" x .375" NOM. WALL THK. SCH 30
10" x .719" NOM. WALL THK. SCH 100
STAINLESS STEEL
12" x .375" NOM. WALL THK. SCH 40S
ASME CC-2 (EQUIVALENT)

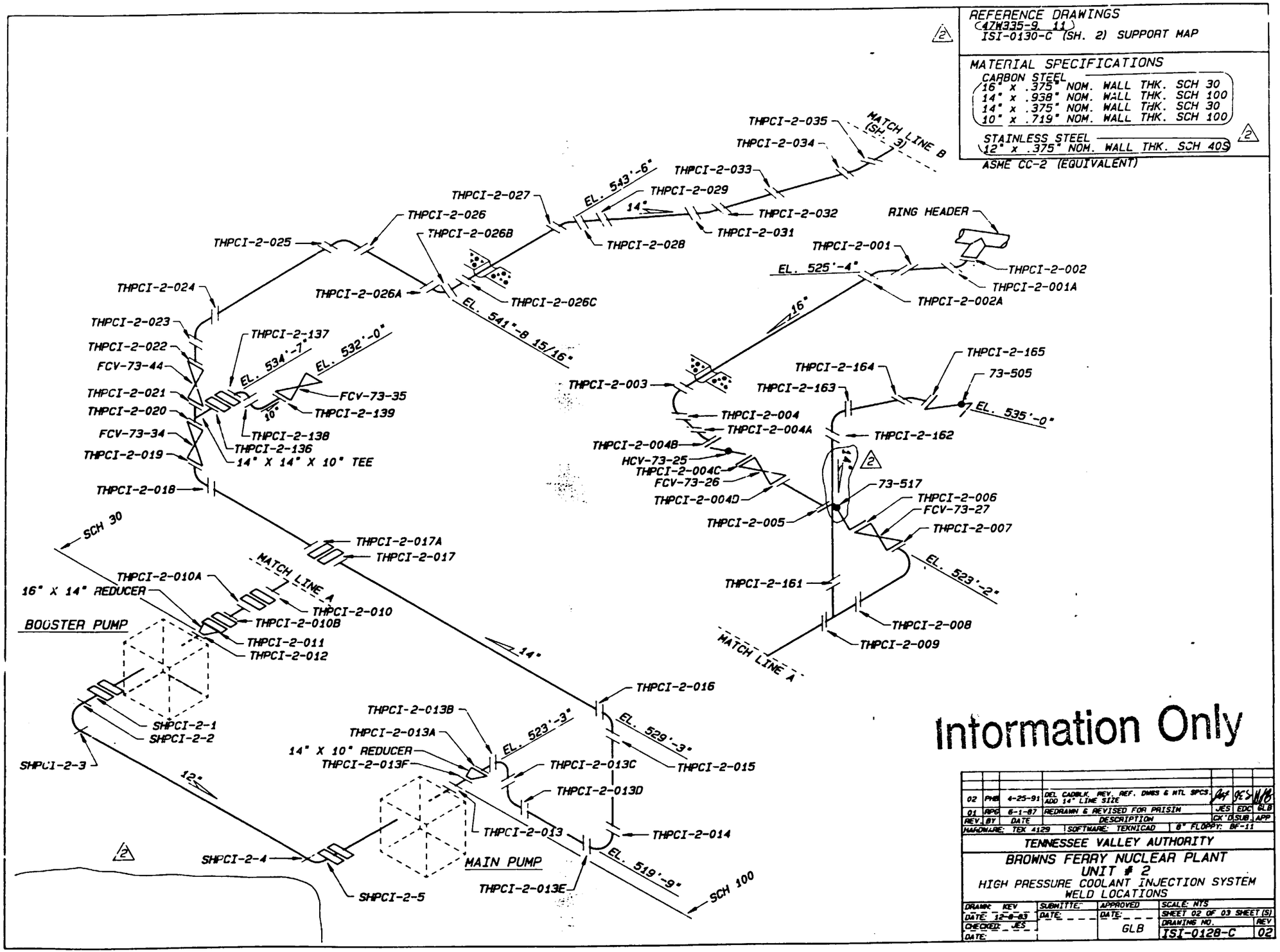

Information Only

REV	BY	DATE	DESCRIPTION	CK'D	SUB	APP
02	PHB	4-25-91	DEL CADBLK, REV. REF. DWGS & NTL SPCS. ADD 14" LINE SIZE		JES	
01	RPG	6-1-87	REDRAWN & REVISED FOR PRISIM	JES	EDC	GLB

HARDWARE: TEX 4129 | SOFTWARE: TEXNICAD | 8" FLOPPY: BF-11

TENNESSEE VALLEY AUTHORITY

BROWNS FERRY NUCLEAR PLANT
UNIT # 2
HIGH PRESSURE COOLANT INJECTION SYSTEM
WELD LOCATIONS

DRAWN: KEV	SUBMITTED:	APPROVED	SCALE: NTS
DATE: 12-8-83	DATE:	DATE:	SHEET 02 OF 03 SHEET(S)
CHECKED: JES		GLB	DRAWING NO. ISI-0128-C — REV 02
DATE:			

REFERENCE DRAWINGS
47W335-9, 11
ISI-0130-C (SH. 3) SUPPORT MAP

MATERIAL SPECIFICATIONS
CARBON STEEL
(14" x .938" NOM. WALL THK. SCH 100)
ASME CC-2 (EQUIVALENT)

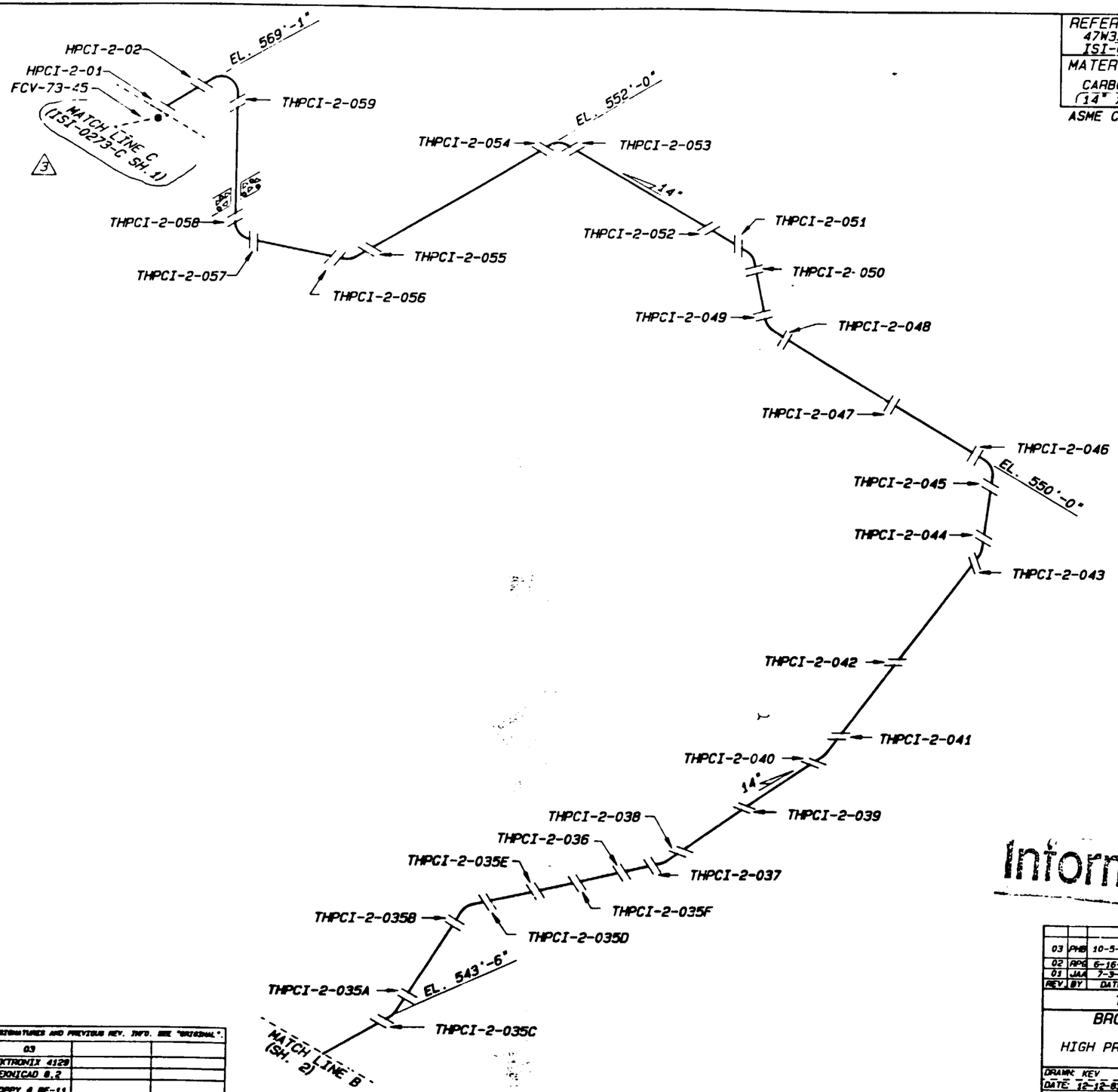

Information Only

REV	BY	DATE	DESCRIPTION	CK'D	SUB	APP
03	PHB	10-5-88	REVISED MATCH LINE C, REFERENCE & MATERIAL SPECIFICATION			
02	RPG	6-16-87	REDRAWN & REVISED FOR PRISIM	*	*	*
01	JAA	7-3-86	ADD SPOOL PIECE	*	*	*

TENNESSEE VALLEY AUTHORITY

BROWNS FERRY NUCLEAR PLANT
UNIT # 2
HIGH PRESSURE COOLANT INJECTION SYSTEM
WELD LOCATIONS

DRAWN: KEV	SUBMITTED	APPROVED	SCALE: NTS
DATE: 12-12-83	DATE:	DATE:	SHEET 03 OF 03 SHEET(S)
CHECKED: *	*	*	DRAWING NO. ISI-0128-C — REV 03
DATE:			

← FOR ORIGINAL SIGNATURES AND PREVIOUS REV. INFO. SEE "ORIGINAL".

REV	03		
HARDWARE	TEKTRONIX 4129		
SOFTWARE	TEKNICAD 8.2		
FLOPPY OR TAPE #	FLOPPY # BF-11		

REFERENCE DRAWINGS
47W335-16
47W335-17
ISI-0131-C (SH. 1) SUPPORTS

MATERIAL SPECIFICATIONS
CARBON STEEL

12" STD. (.375)
10" SCH 40 (.365)
8" SCH 40 (.322)
6" SCH 120 (.562)
6" SCH 40 (.280)

ASME CC-2 (EQUIVALENT)

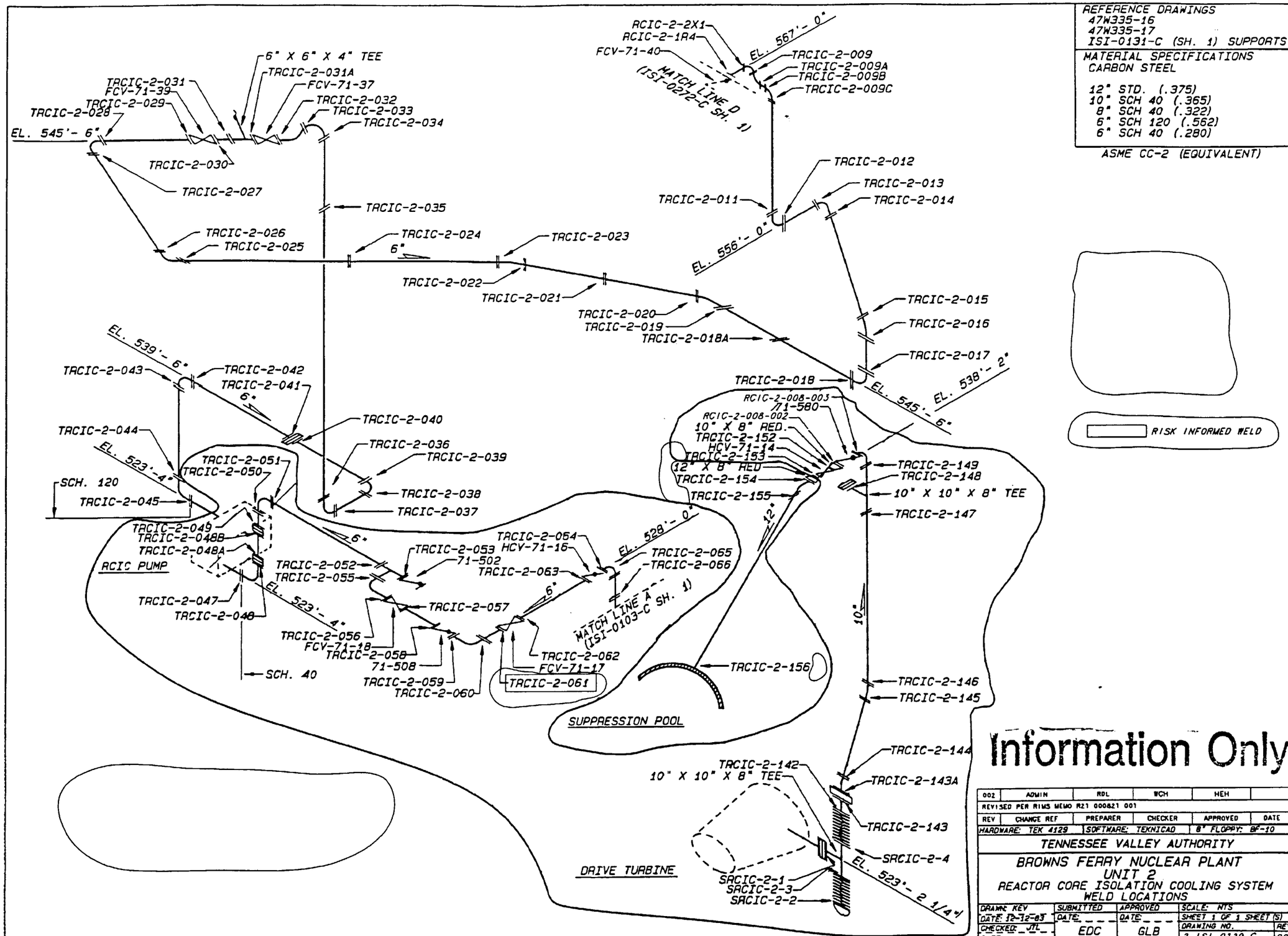

MF
R7

Information Only

REV	CHANGE REF	PREPARER	CHECKER	APPROVED	DATE
002	ADMIN	RDL	WCH	HEH	
REVISED PER RIMS MEMO R21 000621 001					

HARDWARE: TEK 4129 | SOFTWARE: TEKNICAD | 8" FLOPPY: BF-10

TENNESSEE VALLEY AUTHORITY

BROWNS FERRY NUCLEAR PLANT
UNIT 2
REACTOR CORE ISOLATION COOLING SYSTEM
WELD LOCATIONS

DRAWN: KEV	SUBMITTED	APPROVED	SCALE: NTS
DATE: 12-12-83	DATE:	DATE:	SHEET 1 OF 1 SHEET (S)
CHECKED: JTL	EDC	GLB	DRAWING NO. 2-ISI-0129-C
DATE:			REV 002

CCD

CAD MAINTAINED DRAWING

ALL A/D HISTORY RESEARCHED AT R000

NOTE:

1. PIPE SEGMENTS CONTAINING TWO LONGITUDINAL SEAMS WILL BE IDENTIFIED AS:

   (BASE WELD NO.)-LS-1D (DOWNSTREAM)
   (BASE WELD NO.)-LS-2D (DOWNSTREAM)
   (BASE WELD NO.)-LS-1U (UPSTREAM)
   (BASE WELD NO.)-LS-2U (UPSTREAM)

   THE -LS-1 SEAM WILL BE NUMERICALLY CLOSEST TO 0° ON THE PIPE, AND THE -LS-2 SEAM WILL BE NUMERICALLY FARTHERMOST FROM 0° ON THE PIPE. (e.g. -LS-1 AT 130°, AND -LS-2 AT 310°)

2. PIPE SEGMENTS CONTAINING ONLY ONE LONGITUDINAL SEAM WILL BE IDENTIFIED AS:

   (BASE WELD NO.)-LS-D (DOWNSTREAM)
   (BASE WELD NO.)-LS-U (UPSTREAM)

REFERENCE DRAWINGS:
47N1568
47W335-4 & 6
47W452 SERIES
DRAVO E-2458-1C-31, 32, & 33
2-1SI-0276-C SH1
NOTE: THIS DRAWING SUPERCEDES CHM-2070-C ALL SHEETS.

MATERIAL SPECIFICATION:
STAINLESS PIPE A-358, GR 304, CL.1
STAINLESS FITTINGS A-403WP304

24" X 1.219" NOM. WALL THK. SHC. 80 SS
20" X 1.031" NOM. WALL THK. SCH. 80 SS
20" X 1.031" NOM. WALL THK. SCH. 80 CS
6" X 0.432" NOM. WALL THK. SCH. 80S SS

ASME CC-1 (EQUIVALENT)

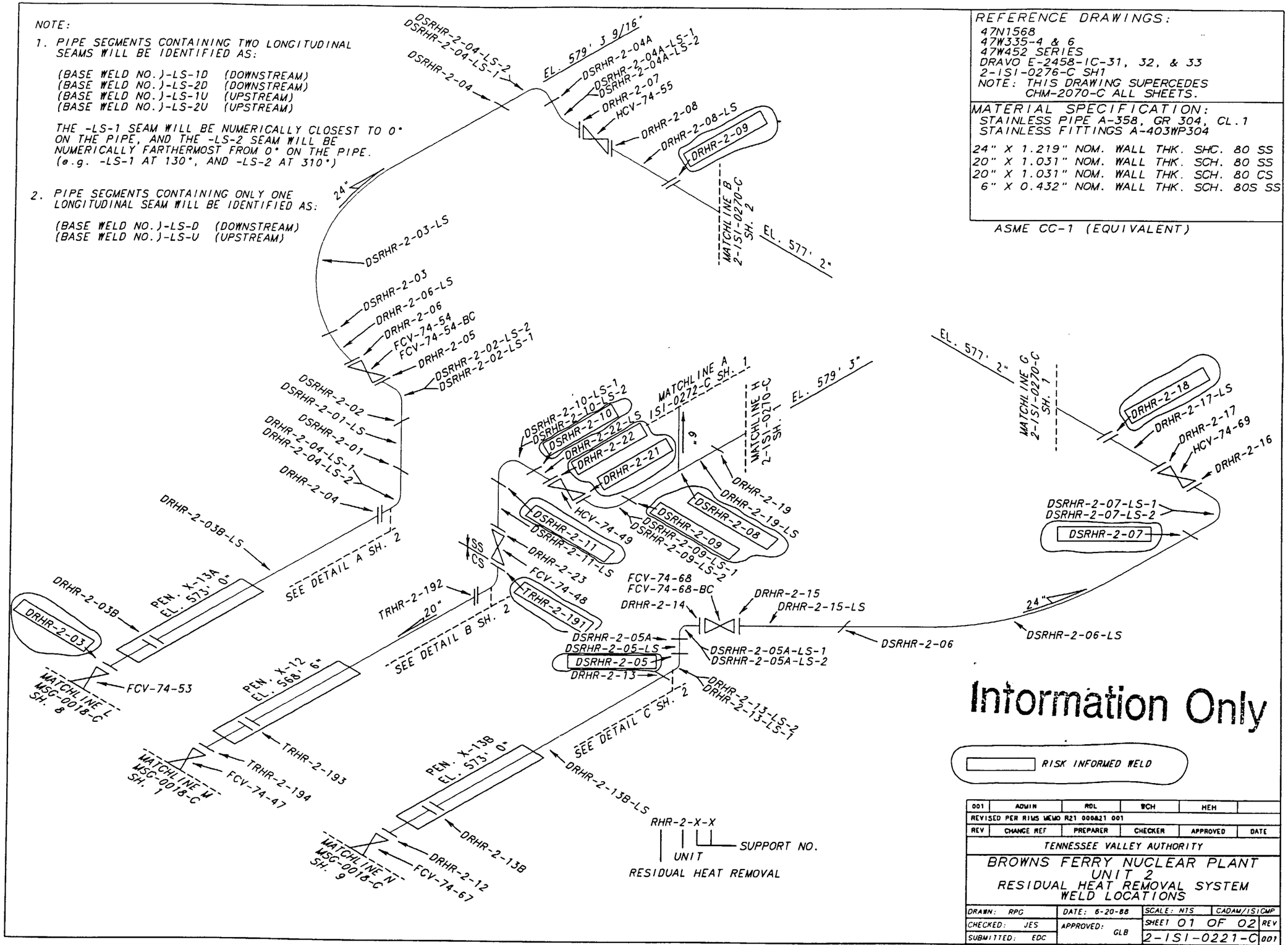

Information Only

REV	CHANGE REF	PREPARER	CHECKER	APPROVED	DATE
001	ADMIN	RDL	WCH	HEH	
REVISED PER RIMS MEMO R21 000821 001					

TENNESSEE VALLEY AUTHORITY

BROWNS FERRY NUCLEAR PLANT
UNIT 2
RESIDUAL HEAT REMOVAL SYSTEM
WELD LOCATIONS

DRAWN: RPG	DATE: 6-20-88	SCALE: NTS	CADAM/1SI CMP
CHECKED: JES	APPROVED: GLB	SHEET 01 OF 02	REV
SUBMITTED: EDC		2-1SI-0221-C	001

ALL A/D HISTORY RESEARCHED AT R000

CAD MAINTAINED DRAWING

CCD

REFERENCE DRAWINGS:
RHR-2-029

MATERIAL SPECIFICATION:

PIPE
SA376 TP 304
2" SCH. 80S
FITTINGS
SA182 F304
2" HALF COUPLING
VALVES
SA182 F316
848, 849
SA351 GR CF8M OR CF3M
850, 851, 852, 853

ASME CC-1 (EQUIVALENT)

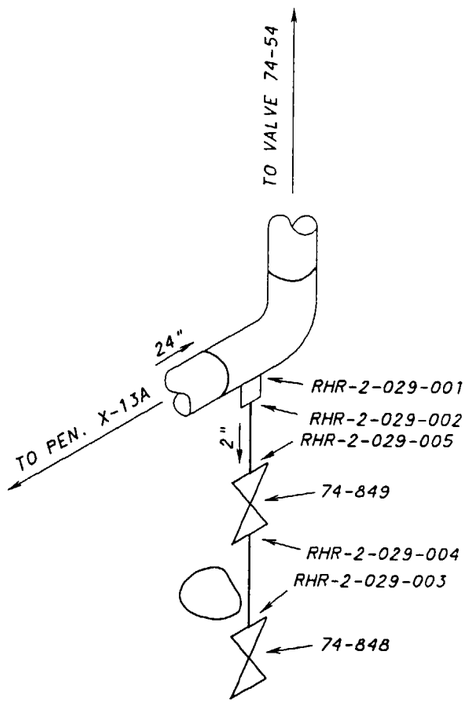

DETAIL A
(SEE SH.1 FOR LOCATION)

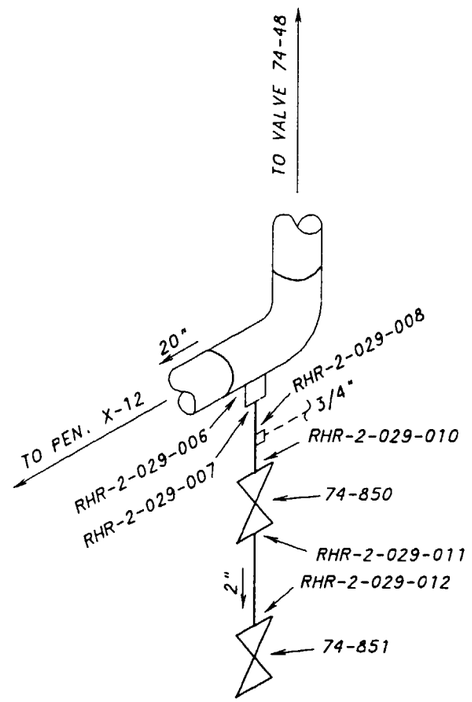

DETAIL B
(SEE SH. 1 FOR LOCATION)

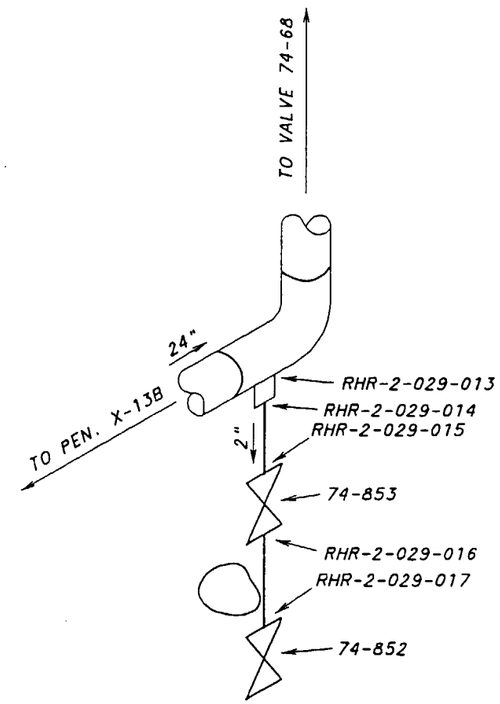

DETAIL C
(SEE SH. 1 FOR LOCATION)

Information Only

REV	CHANGE REF	PREPARER	CHECKER	APPROVED	DATE
001	ADWIN	RDL	WCH	HEH	
REVISED PER RIMS MEMO R21 000821 001					

TENNESSEE VALLEY AUTHORITY

BROWNS FERRY NUCLEAR PLANT
UNIT 2
RESIDUAL HEAT REMOVAL SYSTEM
WELD LOCATIONS

DRAWN: PHB	DATE:	SCALE: NTS	CADAM/ISICMP
CHECKED: JES	APPROVED:	SHEET 02 OF 02	REV
SUBMITTED: JAA	RME	2-ISI-0221-C	001

ALL A/D HISTORY RESEARCHED AT R000

CAD MAINTAINED DRAWING

CCD

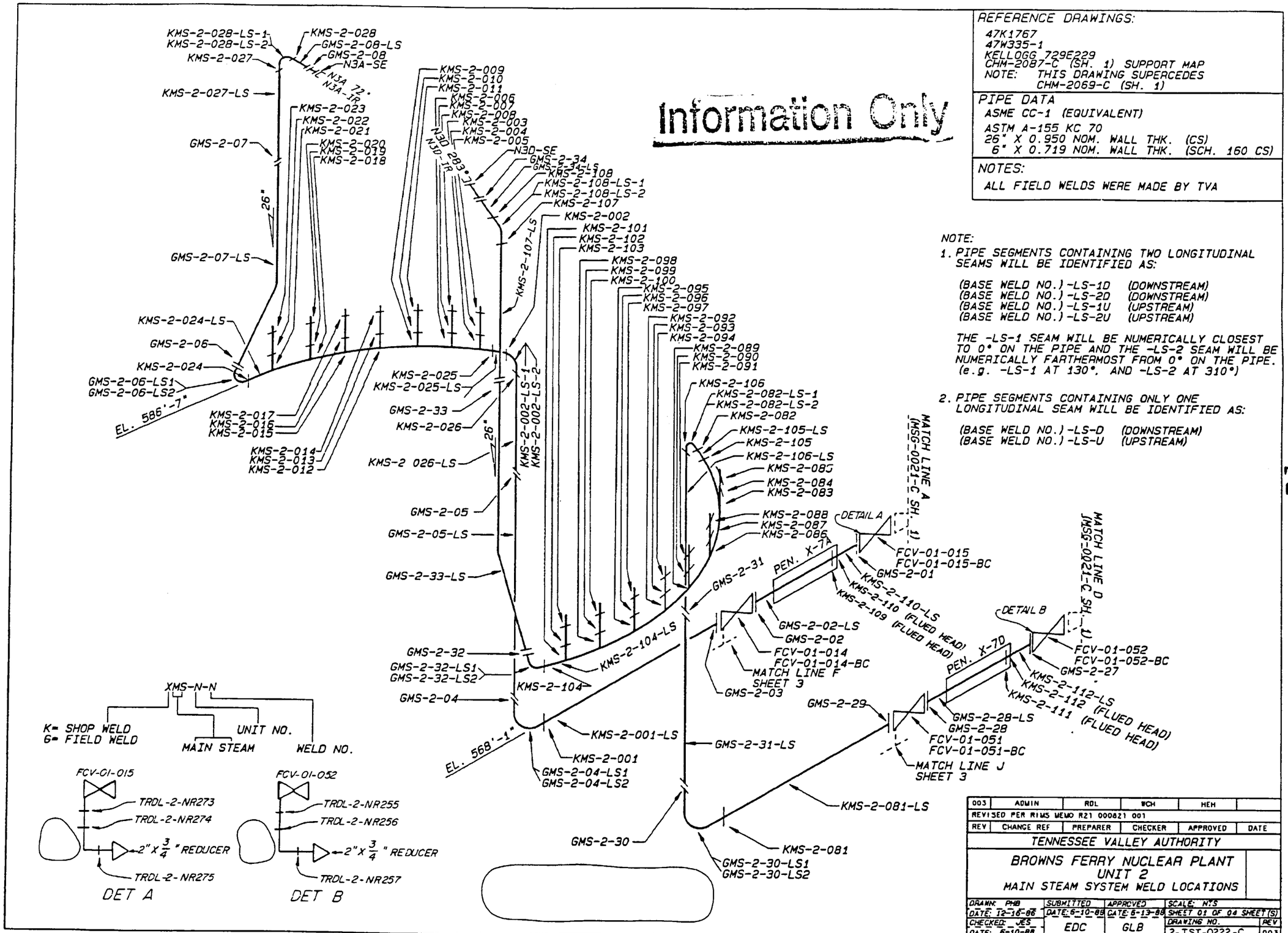
REFERENCE DRAWINGS:
47K1767
47W335-1
KELLOGG 729E229
CHM-2087-C (SH. 1) SUPPORT MAP
NOTE: THIS DRAWING SUPERCEDES CHM-2069-C (SH. 1)
PIPE DATA
ASME CC-1 (EQUIVALENT)
ASTM A-155 KC 70
26" X 0.950 NOM. WALL THK. (CS)
6" X 0.719 NOM. WALL THK. (SCH. 160 CS)
NOTES:
ALL FIELD WELDS WERE MADE BY TVA
Information Only
NOTE:
1. PIPE SEGMENTS CONTAINING TWO LONGITUDINAL SEAMS WILL BE IDENTIFIED AS:
(BASE WELD NO.)-LS-1D (DOWNSTREAM)
(BASE WELD NO.)-LS-2D (DOWNSTREAM)
(BASE WELD NO.)-LS-1U (UPSTREAM)
(BASE WELD NO.)-LS-2U (UPSTREAM)
THE -LS-1 SEAM WILL BE NUMERICALLY CLOSEST TO 0° ON THE PIPE AND THE -LS-2 SEAM WILL BE NUMERICALLY FARTHERMOST FROM 0° ON THE PIPE. (e.g. -LS-1 AT 130°, AND -LS-2 AT 310°)
2. PIPE SEGMENTS CONTAINING ONLY ONE LONGITUDINAL SEAM WILL BE IDENTIFIED AS:
(BASE WELD NO.)-LS-D (DOWNSTREAM)
(BASE WELD NO.)-LS-U (UPSTREAM)
KMS-2-028-LS-1
KMS-2-028-LS-2
KMS-2-028
GMS-2-08-LS
GMS-2-08
N3A-SE
KMS-2-027
N3A 72°
N3A-1R
KMS-2-027-LS
KMS-2-023
KMS-2-022
KMS-2-021
GMS-2-07
KMS-2-020
KMS-2-019
KMS-2-018
26"
GMS-2-07-LS
KMS-2-024-LS
GMS-2-06
KMS-2-024
GMS-2-06-LS1
GMS-2-06-LS2
EL. 586'-7"
KMS-2-017
KMS-2-016
KMS-2-015
KMS-2-014
KMS-2-013
KMS-2-012
KMS-2-009
KMS-2-010
KMS-2-011
KMS-2-006
KMS-2-007
KMS-2-008
KMS-2-003
KMS-2-004
KMS-2-005
N3D-SE
N3D 283°
N3D-1R
GMS-2-34
GMS-2-34-LS
KMS-2-108
KMS-2-108-LS-1
KMS-2-108-LS-2
KMS-2-107
KMS-2-107-LS
KMS-2-002
KMS-2-101
KMS-2-102
KMS-2-103
KMS-2-098
KMS-2-099
KMS-2-100
KMS-2-095
KMS-2-096
KMS-2-097
KMS-2-092
KMS-2-093
KMS-2-094
KMS-2-089
KMS-2-090
KMS-2-091
KMS-2-106
KMS-2-082-LS-1
KMS-2-082-LS-2
KMS-2-082
KMS-2-105-LS
KMS-2-105
KMS-2-106-LS
KMS-2-085
KMS-2-084
KMS-2-083
KMS-2-088
KMS-2-087
KMS-2-086
KMS-2-025
KMS-2-025-LS
GMS-2-33
KMS-2-026
26"
KMS-2-002-LS-1
KMS-2-002-LS-2
KMS-2 026-LS
GMS-2-05
GMS-2-05-LS
GMS-2-33-LS
GMS-2-31
GMS-2-32
GMS-2-32-LS1
GMS-2-32-LS2
KMS-2-104-LS
KMS-2-104
GMS-2-04
EL. 568'-1"
KMS-2-001-LS
KMS-2-001
GMS-2-04-LS1
GMS-2-04-LS2
GMS-2-31-LS
GMS-2-30
KMS-2-081-LS
KMS-2-081
GMS-2-30-LS1
GMS-2-30-LS2
DETAIL A
PEN. X-7A
FCV-01-015
FCV-01-015-BC
GMS-2-01
KMS-2-110-LS
KMS-2-110 (FLUED HEAD)
KMS-2-109 (FLUED HEAD)
GMS-2-02-LS
GMS-2-02
FCV-01-014
FCV-01-014-BC
MATCH LINE F
SHEET 3
GMS-2-03
MATCH LINE A
(MSG-0021-C SH. 1)
DETAIL B
PEN. X-7D
FCV-01-052
FCV-01-052-BC
GMS-2-27
KMS-2-112-LS
KMS-2-112 (FLUED HEAD)
KMS-2-111 (FLUED HEAD)
GMS-2-29
GMS-2-28-LS
GMS-2-28
FCV-01-051
FCV-01-051-BC
MATCH LINE J
SHEET 3
MATCH LINE D
(MSG-0021-C SH. 1)
XMS-N-N
K= SHOP WELD
G= FIELD WELD
UNIT NO.
MAIN STEAM
WELD NO.
FCV-01-015
TRDL-2-NR273
TRDL-2-NR274
2" X 3/4" REDUCER
TRDL-2-NR275
DET A
FCV-01-052
TRDL-2-NR255
TRDL-2-NR256
2" X 3/4" REDUCER
TRDL-2-NR257
DET B
003 ADMIN RDL WCH HEH
REVISED PER RIMS MEMO R21 000821 001
REV CHANGE REF PREPARER CHECKER APPROVED DATE
TENNESSEE VALLEY AUTHORITY
BROWNS FERRY NUCLEAR PLANT
UNIT 2
MAIN STEAM SYSTEM WELD LOCATIONS
DRAWN: PHB
DATE: 12-16-86
CHECKED: JES
DATE: 6-10-88
SUBMITTED
DATE: 6-10-88
EDC
APPROVED
DATE: 6-13-88
GLB
SCALE: N/S
SHEET 01 OF 04 SHEET(S)
DRAWING NO.
2-ISI-0222-C
REV
003
CCD
CAD MAINTAINED DRAWING
ALL A/D HISTORY RESEARCHED AT R000

REFERENCE DRAWINGS:
47K1767
47W335-1
KELLOG 729E229
2-ISI-0279-C (SH. 2) SUPPORT MAP
NOTE: THIS DRAWING SUPERCEDES CHM-2069-C (SH. 2)

PIPE DATA:
ASME CC-1 (EQUIVALENT)
ASTM A-155 KC 70
26" X 0.950" NOM. WALL THK. (CS)
6" X 0.719" NOM. WALL THK. (SCH. 160 CS)

NOTES:
ALL FIELD WELDS WERE MADE BY TVA

Information Only

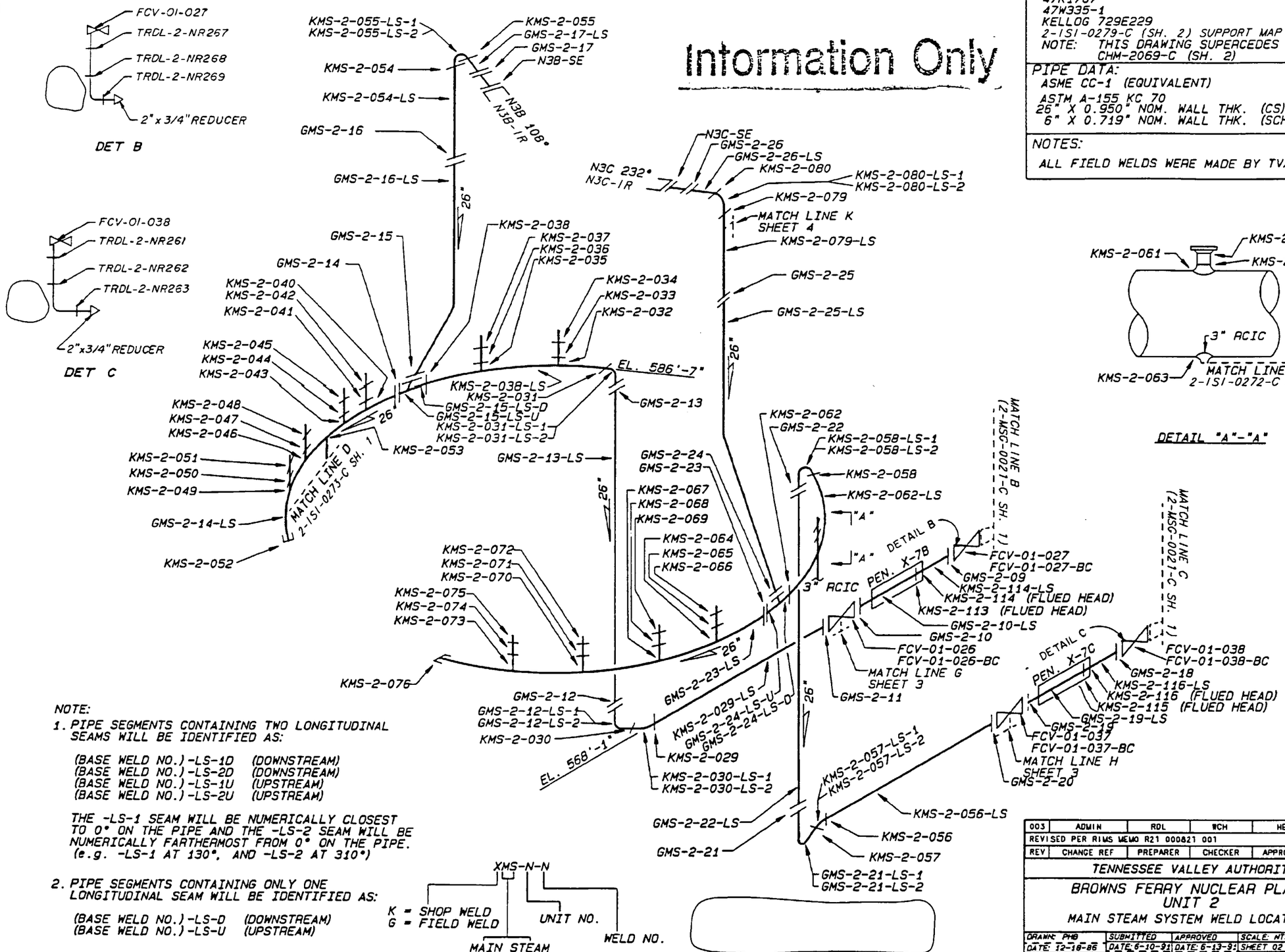

NOTE:

1. PIPE SEGMENTS CONTAINING TWO LONGITUDINAL SEAMS WILL BE IDENTIFIED AS:

   (BASE WELD NO.)-LS-1D (DOWNSTREAM)
   (BASE WELD NO.)-LS-2D (DOWNSTREAM)
   (BASE WELD NO.)-LS-1U (UPSTREAM)
   (BASE WELD NO.)-LS-2U (UPSTREAM)

   THE -LS-1 SEAM WILL BE NUMERICALLY CLOSEST TO 0° ON THE PIPE AND THE -LS-2 SEAM WILL BE NUMERICALLY FARTHERMOST FROM 0° ON THE PIPE. (e.g. -LS-1 AT 130°, AND -LS-2 AT 310°)

2. PIPE SEGMENTS CONTAINING ONLY ONE LONGITUDINAL SEAM WILL BE IDENTIFIED AS:

   (BASE WELD NO.)-LS-D (DOWNSTREAM)
   (BASE WELD NO.)-LS-U (UPSTREAM)

REV	CHANGE REF	PREPARER	CHECKER	APPROVED	DATE
003	ADMIN	RDL	WCH	HEH	
REVISED PER RIMS MEMO R21 000821 001					

TENNESSEE VALLEY AUTHORITY

BROWNS FERRY NUCLEAR PLANT
UNIT 2
MAIN STEAM SYSTEM WELD LOCATIONS

DRAWN: PHB	SUBMITTED	APPROVED	SCALE: NTS
DATE: 12-18-86	DATE: 6-10-91	DATE: 6-13-91	SHEET 02 OF 04 SHEET(S)
CHECKED: JES	EDC	GLB	DRAWING NO. 2-ISI-0222-C
DATE: 6-10-91			REV 003

CCD

ALL A/D HISTORY RESEARCHED AT R000

CAD MAINTAINED DRAWING

REFERENCE DRAWINGS:
47W400 SERIES
47B400 SERIES
2-47E801-1

MATERIAL SPECIFICATIONS:
PIPING
2"&3" SCH. 160 A-333 GR.WPLI CS
FITTINGS
BUTT WELD A420 GR.WPLI
SOCKET WELD A350 GR.LF1 SCH 160

ASME CC-1 (EQUIVALENT)

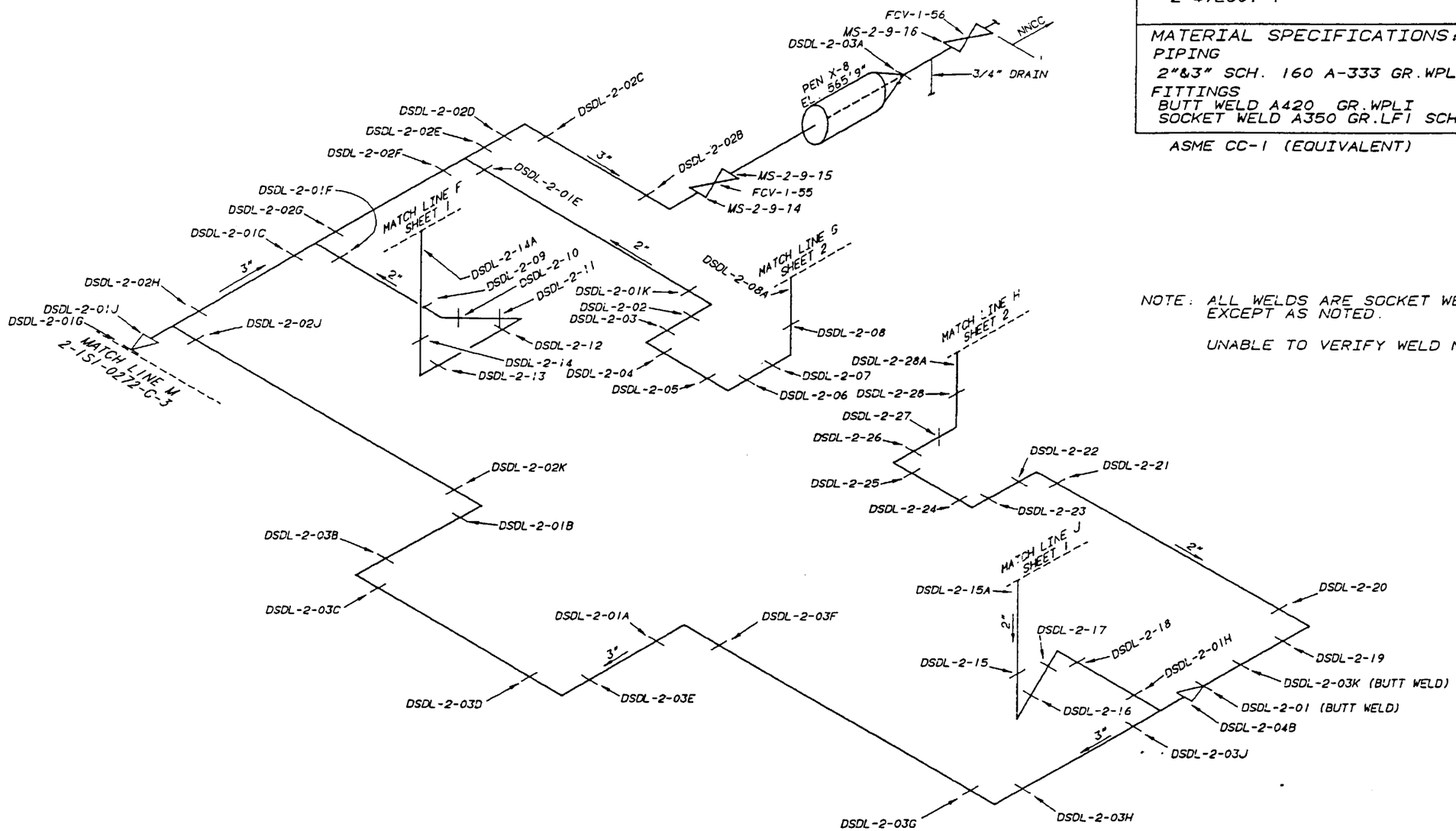

NOTE: ALL WELDS ARE SOCKET WELDED EXCEPT AS NOTED.

UNABLE TO VERIFY WELD NOS.

Information Only

REV	CHANGE REF	PREPARER	CHECKER	APPROVED	DATE
002	ADMIN	RDL	WCH	HEH	
REVISED PER RIMS MEMO R21 000621 001					

TENNESSEE VALLEY AUTHORITY

BROWNS FERRY NUCLEAR PLANT
UNIT 2
MAIN STEAM SYSTEM
DRAIN WELD LOCATIONS

DRAWN: PHB	SUBMITTED	APPROVED	SCALE NTS
DATE: 9-16-91	DATE: 9-20-91	DATE: 9/24/91	SHEET 03 OF 04 SHEET(S)
CHECKED:			DRAWING NO. / REV.
DATE: 9-20-91	YES		2-1S1-0222-C / 002

CCD

ALL A/D HISTORY RESEARCHED AT R000

CAD MAINTAINED DRAWING

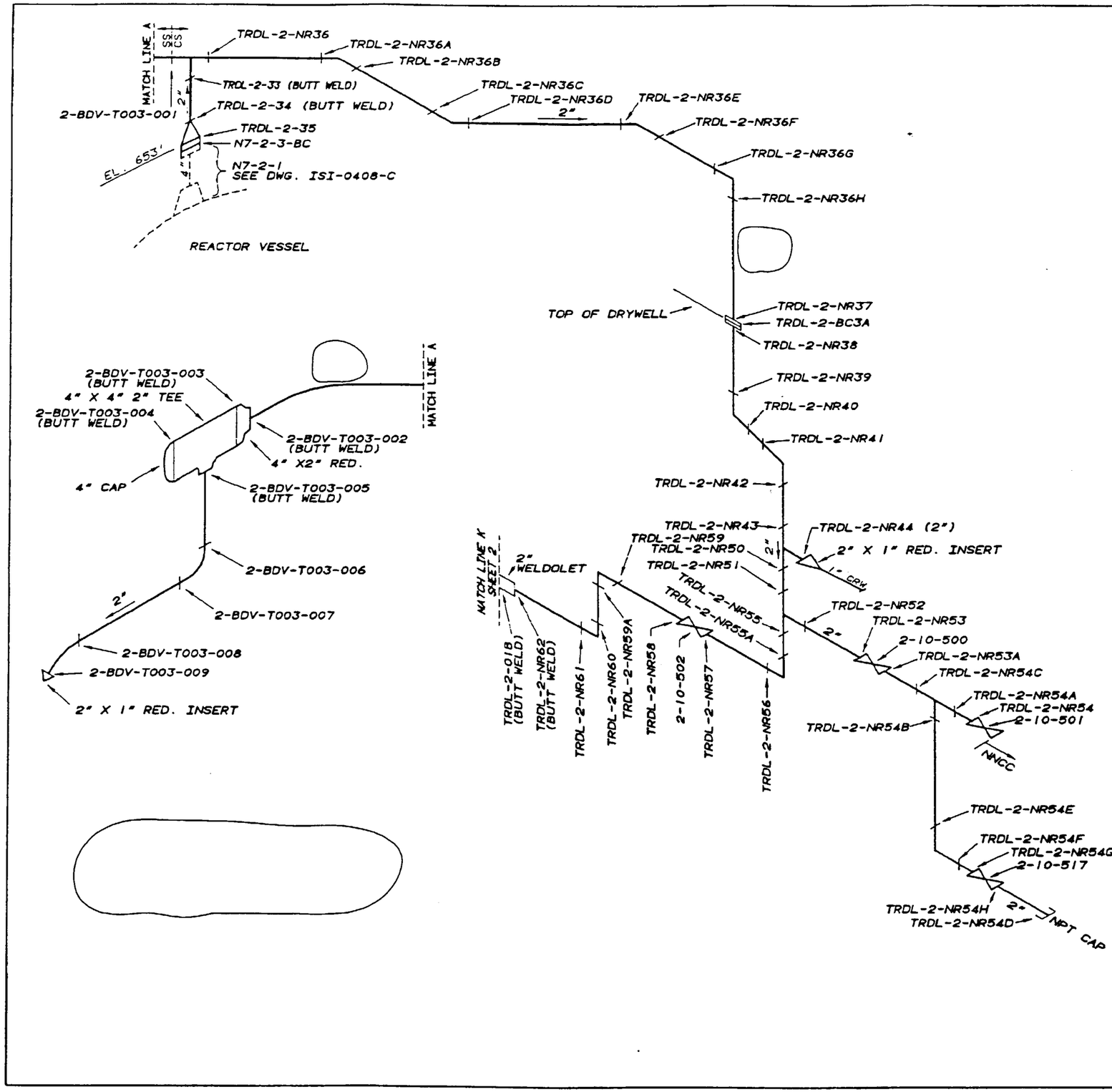

REFERENCE DRAWINGS:
47W465 SERIES PIPING DWG
47W465 H SERIES SUPPORT DWG
47B465 SERIES SUPPORT DWG.
47A465 SERIES SUPPORT DWG.
2-47E817-1 FLOW DIAGRAM

MATERIAL SPECIFICATIONS:

PIPING
2" SCH. 160 CS A106 GR B

FITTINGS
2" - 6000 LB. SA-105 GR II

FLANGE
4" - 900 LB. A508 CL2

REDUCER
4" SCH.80 X 2" SCH.160 CS A-234
(0.337" X 0.344") NOM. WALL

STAINLESS STEEL
PIPING
ASTM A312 TP304
2" SCH. 160 S.S.
SOCKET FITTINGS
ASTM A182 F304
#6000 S.S.
B.W. FITTINGS
SA 403 WP 304
SCH. 160 S.S.

ASME CC-1 (EQUIVALENT)

NOTES:

1. ALL 2" WELDS ARE SOCKET WELDED, UNLESS OTHERWISE NOTED.

Information Only

001	ADMIN	RDL	WCH	HEH	
REVISED PER RIMS MEMO R21 000621 001					
REV	CHANGE REF	PREPARER	CHECKER	APPROVED	DATE
HARDWARE: IBM 5085		SOFTWARE: CADAM		USER: ISICMP	

TENNESSEE VALLEY AUTHORITY

BROWNS FERRY NUCLEAR PLANT
UNIT 2
FEEDWATER SYSTEM
INSTRUMENTATION WELD LOCATIONS

DRAWN: PHB	SUBMITTED	APPROVED	SCALE NTS
DATE: 9-16-91	DATE: 9-29-91	DATE: 9-29-91	SHEET 04 OF 04 SHEET(S)
CHECKED: JAA	JES	GLB	DRAWING NO. 2-1S1-0222-C REV. 001
DATE: 9-20-91			

ALL A/D HISTORY RESEARCHED AT R000

CAD MAINTAINED DRAWING

CCD

REFERENCE DRAWINGS
B&W 122863

NOTE: THIS DRAWING SUPERSEDES CHM-2001-C (UNIT 2)

ASME CC-1 (EQUIVALENT)

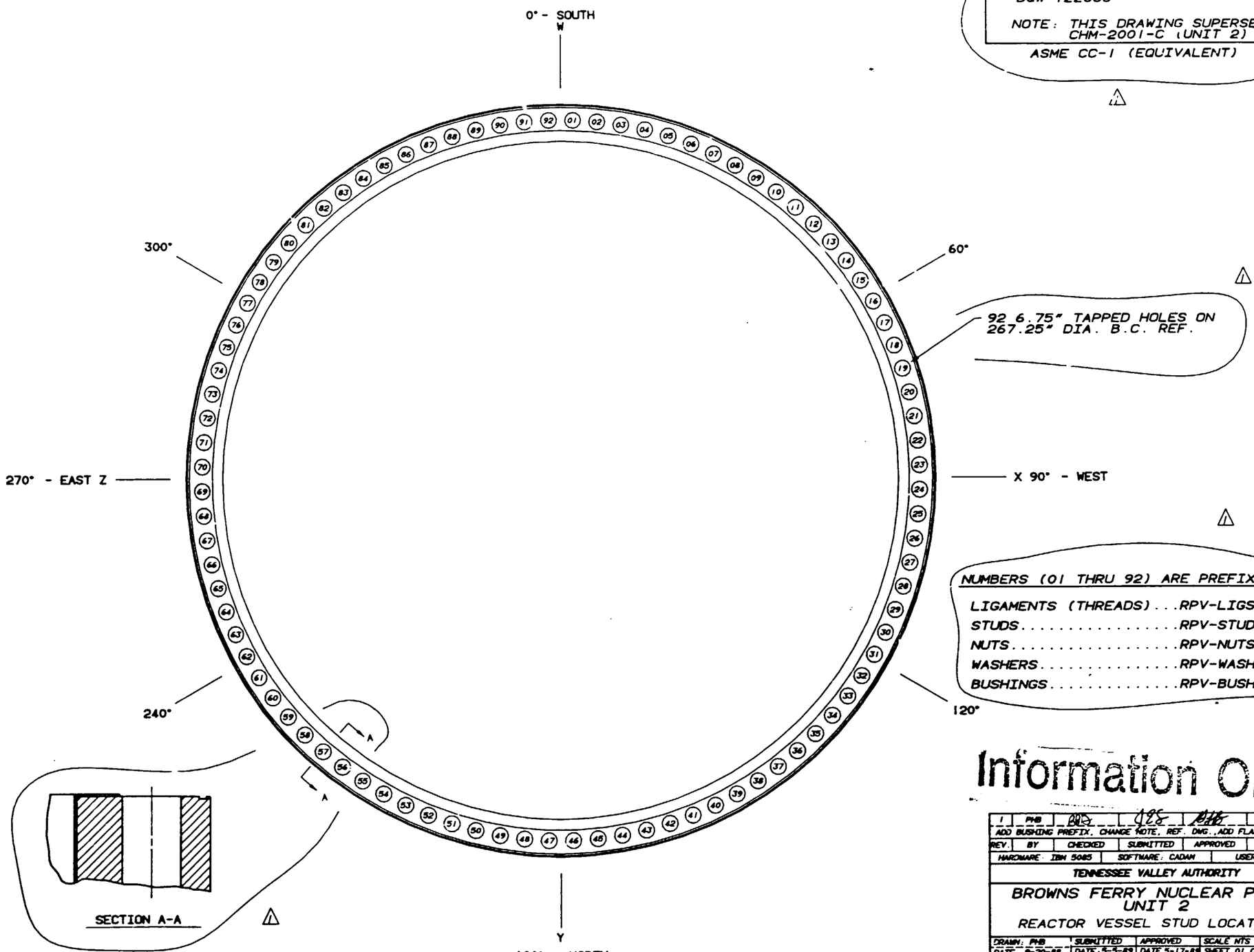

NUMBERS (01 THRU 92) ARE PREFIXED BY:

LIGAMENTS (THREADS) . . . RPV-LIGS-2-
STUDS RPV-STUDS-2-
NUTS RPV-NUTS-2-
WASHERS RPV-WASH-2-
BUSHINGS RPV-BUSH-2-

Information Only

REV.	BY	CHECKED	SUBMITTED	APPROVED	DATE
1	PHB	[illegible]	[illegible]	[illegible]	3/13/92

ADD BUSHING PREFIX, CHANGE NOTE, REF. DWG., ADD FLANGE PROFILE

HARDWARE: IBM 5085 | SOFTWARE: CADAM | USER: ISICMP

TENNESSEE VALLEY AUTHORITY

BROWNS FERRY NUCLEAR PLANT
UNIT 2

REACTOR VESSEL STUD LOCATIONS

DRAWN: PHB	SUBMITTED	APPROVED	SCALE NTS
DATE: 9-20-88	DATE: 5-5-89	DATE 5-17-89	SHEET 01 OF 01 SHEET(S)
CHECKED: JES	EDC	GLB	DRAWING NO. / REV.
DATE: 5-3-89			ISI-0266-C / 01

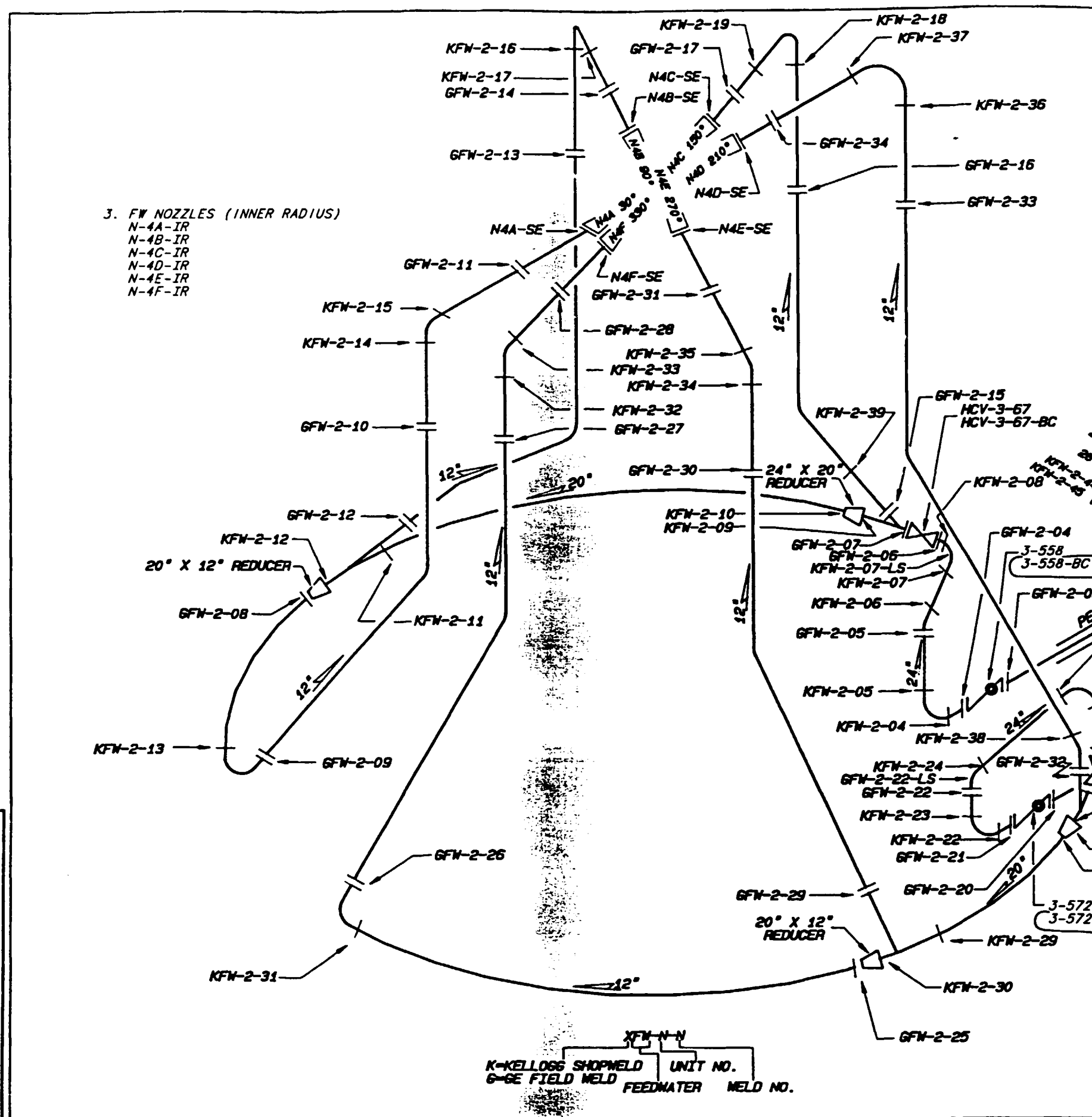

REFERENCE DRAWINGS

47K1545-1
47W335-2
GE 729E152
ISI-0277-C (SH. 1) SUPPORT MAP
THIS DRAWING SUPERCEDES CHM-2067-C ALL SHEETS.

MATERIAL SPECIFICATIONS

ASTM A-106 GR B SCH.100 OR ASTM A-155 GR KCF70CL
8" X 0.593" NOM. WALL CS
12" X 0.844 NOM. WALL CS
16" X 1.031" NOM. WALL CS
20" X 1.281 NOM. WALL CS
24" X 1.531 NOM. WALL CS
26" X 26" X 16" TEE SCH. 100 CS

ASTM A-106 GR B SCH. 120
12" X 1.00" NOM. WALL (SPOOL PEICE TO NOZZLE)

ASTM A-105 GR II
24" FLUED HEAD CS

ASTM A-234 GR B SCH.100 OR X.XXX" MIN WALL (TO SUIT PIPE AS FURNISHED)
ALL OTHER TEES, ELLS, AND REDUCERS

ASME CC-1 (EQUIVALENT)

NOTES

1. GE FIELD WELDS WERE MADE IN THE FIELD BY TVA.
2. PIPE SEGMENT LONGITUDINAL SEAMS WILL BE IDENTIFIED AS:
(BASE WELD)-LS-D (DOWNSTREAM)
(BASE WELD)-LS-U (UPSTREAM)

Information Only

REV	CHANGE REF	PREPARER	CHECKER	APPROVED	DATE
002	ADMIN	RGP	WCH	RLD	2-15-00
REVISED PER RIMS MEMO R21 000206 002					

TENNESSEE VALLEY AUTHORITY
BROWNS FERRY NUCLEAR PLANT
UNIT #2
FEEDWATER SYSTEM
WELD LOCATIONS

DRAWN: RPG	SUBMITTED	APPROVED	SCALE: NTS
DATE: 11-12-98	DATE: 6-10-98	DATE: 6-13-98	SHEET 01 OF 01 SHEETS
CHECKED: JES	EDC	GLB	DRAWING NO. 2-ISI-0269-C
DATE: 6-10-98			REV 002

ALL A/D HISTORY RESEARCHED AT R000

CCD

CAD MAINTAINED DRAWING

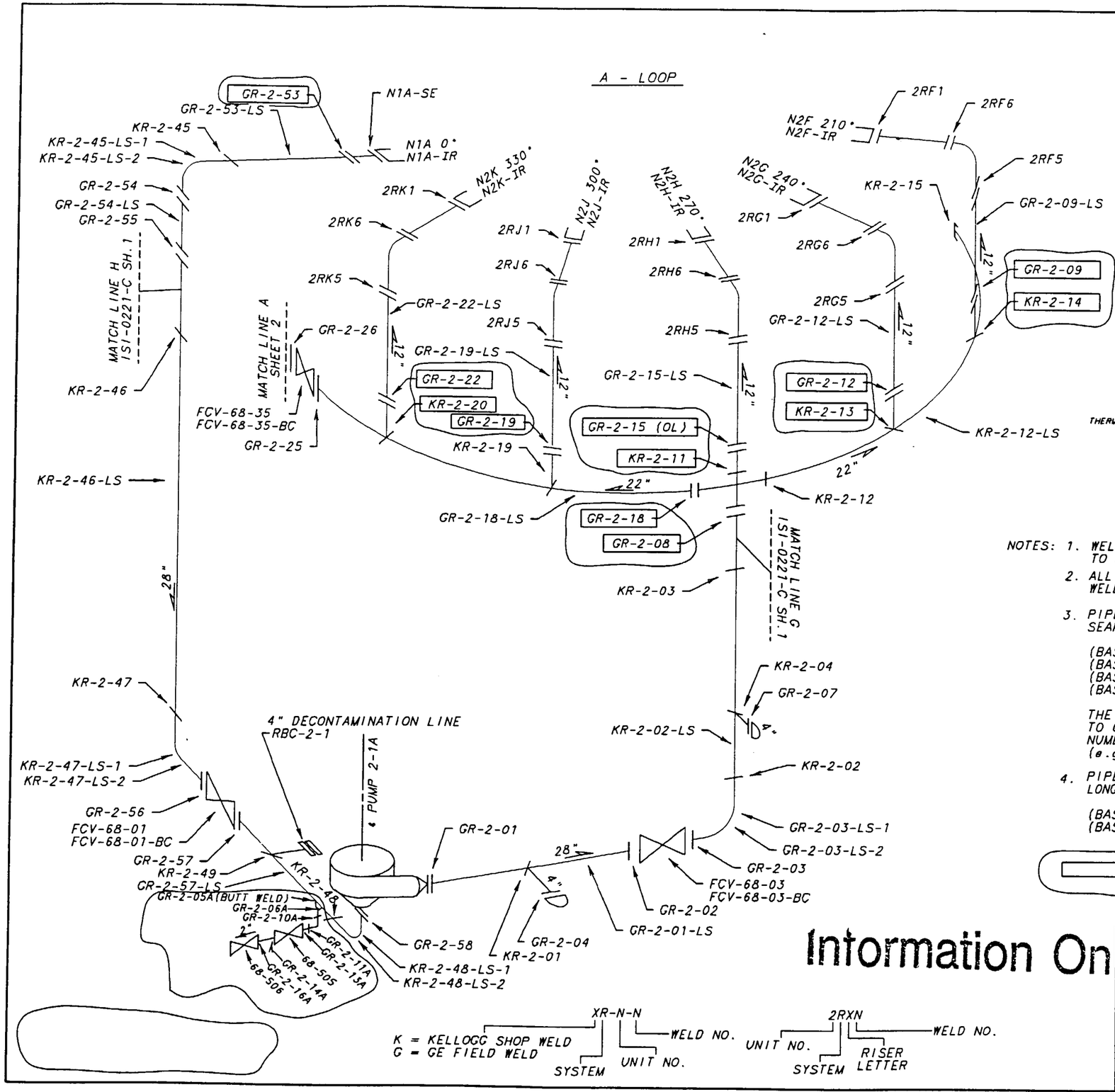

REFERENCE DRAWINGS:

2-47W2408-8,9 (S.E. REPLACEMENT)
GE 769E963 (S.E. REPLACEMENT)
TVA 47K1544-2
GE 2-153F754
KELLOGG BF 2-180
NOTE: THIS DRAWING SUPERSEDES CHM-2068-C ALL SHEETS

MATERIAL SPECIFICATIONS:

A358, TP 304
4" X 0.337" NOM WALL THK. (SS)
12" X 0.569" NOM. WALL THK. (SS)
22" X 1.030" NOM. WALL THK. (SS)
28" X 1.138" NOM. WALL THK. (SS) SUCTION
28" X 1.322" NOM. WALL THK. (SS) DISCHARGE

2" SCH. 80 A-376, TP304
2" FITTINGS A-182, F304

SAFE END REPLACEMENT
12" X 0.688 NOM. WALL THK. (SS)
SA 403 WP 316 N.G.

ASME CC-1 (EQUIVALENT)

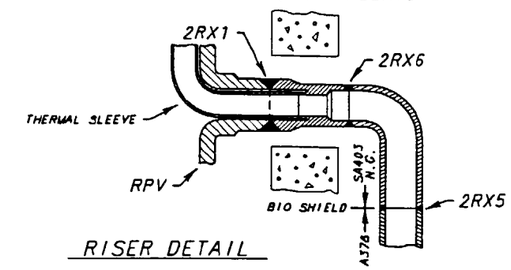

RISER DETAIL

NOTES:
1. WELDS 2RX1 ARE THE NOZZLE TO SAFE-END WELDS
2. ALL 2" WELDS ARE SOCKET WELDED EXCEPT WHERE NOTED.
3. PIPE SEGMENTS CONTAINING TWO LONGITUDINAL SEAMS WILL BE IDENTIFIED AS:

(BASE WELD NO.)-LS-1D (DOWNSTREAM)
(BASE WELD NO.)-LS-2D (DOWNSTREAM)
(BASE WELD NO.)-LS-1U (UPSTREAM)
(BASE WELD NO.)-LS-2U (UPSTREAM)

THE -LS-1 SEAM WILL BE NUMERICALLY CLOSEST TO 0° ON THE PIPE, AND THE -LS-2 SEAM WILL BE NUMERICALLY FARTHERMOST FROM 0° ON THE PIPE. (e.g.: -LS-1 AT 130°, AND -LS-2 AT 310°)

4. PIPE SEGMENTS CONTAINING ONLY ONE LONGITUDINAL SEAM WILL BE IDENTIFIED AS

(BASE WELD NO.)-LS-D (DOWNSTREAM)
(BASE WELD NO.)-LS-U (UPSTREAM)

RISK IMFORMED WELDS

K = KELLOGG SHOP WELD
G = GE FIELD WELD

XR-N-N: SYSTEM, UNIT NO., WELD NO.

2RXN: UNIT NO., SYSTEM, RISER LETTER, WELD NO.

Information Only

REV	CHANGE REF	PREPARER	CHECKER	APPROVED	DATE
002	ADMIN	RDL	WCH	HEH	
REVISED PER RIMS MEMO R21 000821 001					

TENNESSEE VALLEY AUTHORITY

BROWNS FERRY NUCLEAR PLANT
UNIT 2
RECIRCULATION SYSTEM
WELD LOCATIONS

DRAWN: PHB	SUBMITTED	APPROVED	SCALE NTS
DATE: 9-10-87	DATE 6-14-88	DATE 6-14-88	SHEET 1 OF 2 SHEET(S)
CHECKED: JES	EDC	GLB	DRAWING NO. 2-1S1-0270-C REV. 002
DATE: 6-14-88			

CAD MAINTAINED DRAWING

CCD

ALL A/D HISTORY RESEARCHED AT R000

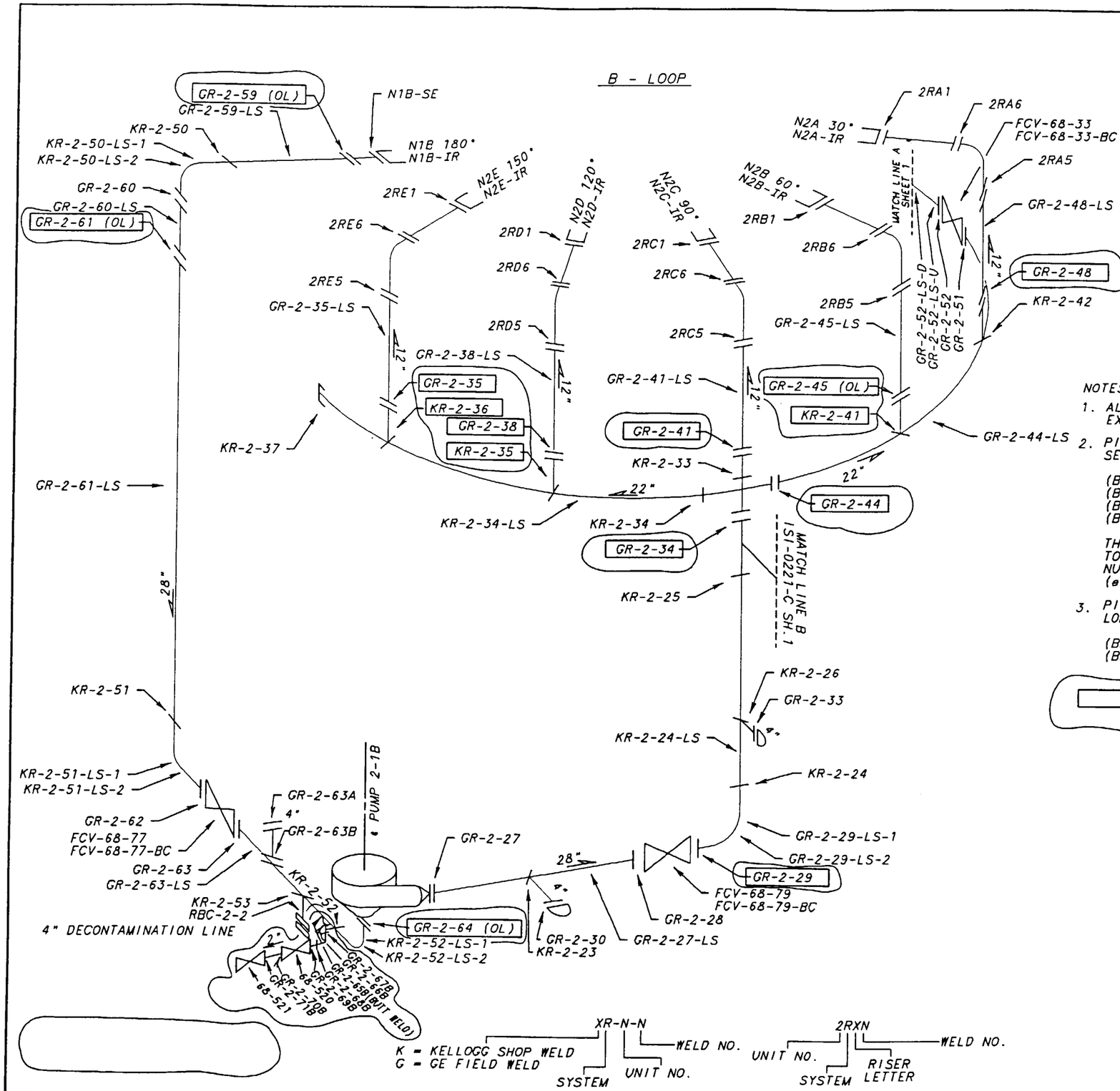

REFERENCE DRAWINGS:

2-47W2408-8,9 (S.E. REPLACEMENT)
GE 769E963 (S.E. REPLACEMENT)
TVA 47K1544-2
GE 2-153F754
KELLOGG BF 2-180
NOTE: THIS DRAWING SUPERSEDES CHM-2068-C ALL SHEETS

MATERIAL SPECIFICATIONS:

A358, TP 304
4" X 0.337" NOM WALL THK. (SS)
12" X 0.569" NOM. WALL THK. (SS)
22" X 1.030" NOM. WALL THK. (SS)
28" X 1.138" NOM. WALL THK. (SS) SUCTION
28" X 1.322" NOM. WALL THK. (SS) DISCHARGE

2" SCH. 80, A376, TP304
2" FITTINGS A182,F304

SAFE END REPLACEMENT
12" X 0.688 NOM. WALL THK. (SS)
SA 403 WP 316 N.G.

ASME CC-1 (EQUIVALENT)

NOTES:

1. ALL 2" WELDS ARE SOCKET WELDED EXCEPT WHERE NOTED.
2. PIPE SEGMENTS CONTAINING TWO LONGITUDINAL SEAMS WILL BE IDENTIFIED AS:

   (BASE WELD NO.)-LS-1D (DOWNSTREAM)
   (BASE WELD NO.)-LS-2D (DOWNSTREAM)
   (BASE WELD NO.)-LS-1U (UPSTREAM)
   (BASE WELD NO.)-LS-2U (UPSTREAM)

   THE -LS-1 SEAM WILL BE NUMERICALLY CLOSEST TO 0° ON THE PIPE, AND THE -LS-2 SEAM WILL BE NUMERICALLY FARTHERMOST FROM 0° ON THE PIPE. (e.g. -LS-1 AT 130°, AND -LS-2 AT 310°)
3. PIPE SEGMENTS CONTAINING ONLY ONE LONGITUDINAL SEAM WILL BE IDENTIFIED AS

   (BASE WELD NO.)-LS-D (DOWNSTREAM)
   (BASE WELD NO.)-LS-U (UPSTREAM)

RISK INFORMED WELDS

Information Only

REV	CHANGE REF	PREPARER	CHECKER	APPROVED	DATE
003	ADMIN	RDL	WCH	HEH	
REVISED PER RIMS MEMO R21 000821 001					

TENNESSEE VALLEY AUTHORITY

BROWNS FERRY NUCLEAR PLANT
UNIT 2
RECIRCULATION SYSTEM
WELD LOCATIONS

DRAWN: PHB	SUBMITTED	APPROVED	SCALE NTS
DATE: 3-28-89	DATE 5-8-89	DATE 5-17-89	SHEET 2 OF 2 SHEET(S)
CHECKED: JES	EDC	GLB	DRAWING NO. 2-ISI-0270-C003 REV.
DATE: 5-3-89			

ALL A/D HISTORY RESEARCHED • R000

CAD MAINTAINED DRAWING

CCD

REFERENCE DRAWINGS
DRAVO E-2458-1C-34
DRAVO E-2458-1C-35
NOTE: THIS DRAWING SUPERSEDES CHM-2071-C ALL SHEETS

MATERIAL SPECIFICATIONS
12" SCH. 80 SA 333 GR6 CS
12.75" X .687" NOM. WALL THK.
12" SCH. 80 ASTM A358 GR 304 SS
12.75" X .687" NOM. WALL THK.
10" SCH. 80 SA 333 GR6 CS
10.75" X .593" NOM. WALL THK.
10" SCH. 80 ASTM A358 GR 304 SS
10.75" X .593" NOM. WALL THK.

ASME CC-1 (EQUIVALENT)
RISK INFORMED WELD

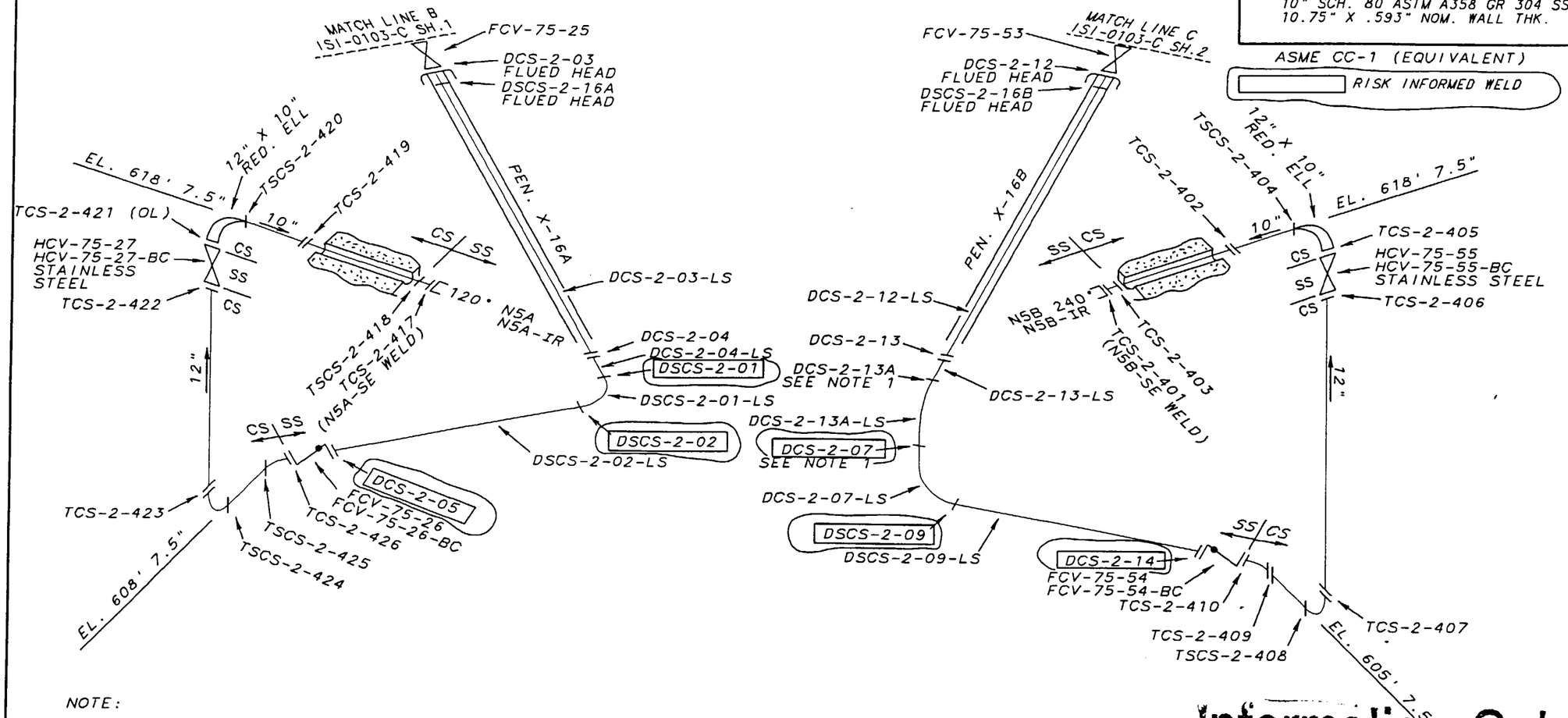

NOTE:

1. WELDS DCS-2-07 AND DCS-2-13A ARE DRAVO SHOP WELDS.
2. PIPE SEGMENTS CONTAINING ONLY ONE LONGITUDINAL SEAM WILL BE IDENTIFIED AS:

(BASE WELD NO.)-LS-D (DOWNSTREAM)
(BASE WELD NO.)-LS-U (UPSTREAM)

DXCS - N - N

CORE SPRAY

D=DRAVO FIELD WELD
DS=DRAVO SHOP WELD
T=TVA FIELD WELD
TS=TVA SHOP WELD

WELD NO.

UNIT NO.

Information Only

REV	CHANGE REF	PREPARER	CHECKER	APPROVED	DATE
003	ADMIN	RDL	WCH	HEH	
REVISED PER RIMS MEMO R21 000821 001					

TENNESSEE VALLEY AUTHORITY

BROWNS FERRY NUCLEAR PLANT
UNIT 2
CORE SPRAY SYSTEM
WELD LOCATIONS

DRAWN: PHB | DATE: 5-17-89 | SCALE: NTS | CADAM/1S1CMP
CHECKED: JES | APPROVED: CLB | SHEET 01 OF 01 | REV
SUBMITTED: EDC | 2-1S1-0271-C | 003

CAD MAINTAINED DRAWING

CCD

ALL A/D HISTORY RESEARCHED AT R000

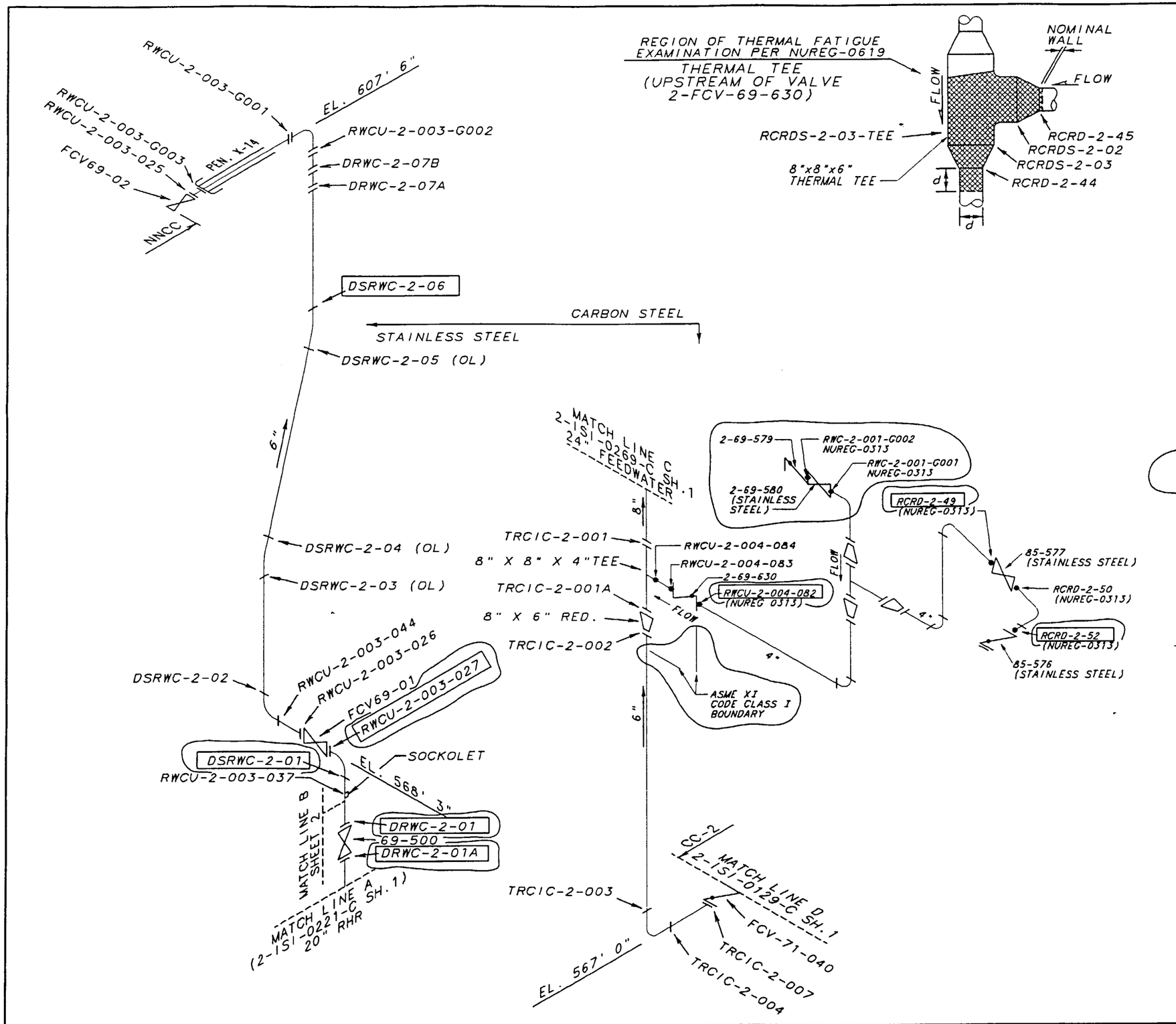

REFERENCE DRAWINGS
CRD-2-005
RCIC-2-004
RWC-2-001
47W335-14, -17

NOTE:
THIS DRAWING SUPERSEDES CHM-2075-C AND CHM-2072-C (ALL SHEETS)

MATERIAL SPECIFICATIONS

STAINLESS STEEL
FITTINGS
6" SA403 WP316NG SCH. 80 SS
PIPING
6" SA376 TP316NG SCH. 80 SS
6" A376GR TP304 SCH. 80 SS
6" A312GR TP304 SCH. 80 SS

CARBON STEEL
4" SCH. 80 A-333, GR1 (SEAMLESS) CS
6" X 0.562" NOM WALL SCH. 120 CS
8" X 0.593" NOM WALL SCH. 100 CS
VALVE
2-69-630 SA182 F316
CRD CAP
4" X 0.674" NOM WALL SS

ASME CC-1 (EQUIVALENT)

RISK INFORMED WELD

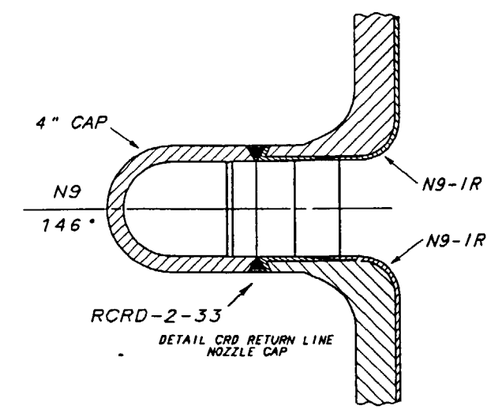

Information Only

REV	CHANGE REF	PREPARER	CHECKER	APPROVED	DATE
006	ADMIN	RDL	WCH	HEH	
REVISED PER RIMS MEMO R21 000821 001, R21 000622 001					

TENNESSEE VALLEY AUTHORITY

BROWNS FERRY NUCLEAR PLANT
UNIT 2
REACTOR WATER CLEAN UP, RCIC, AND CRD WELD IDENTIFICATION

DRAWN: PHB	DATE: 6-9-88	SCALE: NTS	CADAM/ISICMP
CHECKED: JES	APPROVED: GLB	SHEET 01 OF 03	REV
SUBMITTED: EDC		2-ISI-0272-C	006

CCD

ALL A/D HISTORY RESEARCHED AT R000

CAD MAINTAINED DRAWING

REFERENCE DRAWINGS:
47W465 SERIES PIPING DWG
47W465 H SERIES SUPPORT DWG
47B465 SERIES SUPPORT DWG.
47A465 SERIES SUPPORT DWG.
2-47E817-1 FLOW DIAGRAM

MATERIAL SPECIFICATIONS:
PIPING
2" SCH. 80 SS A-182-F304 OR F316
2" SCH. 80 CS A-106-GR B
FITTINGS
3000 LB. A-182-F304 OR F316
2" SOCKOLET FITTING MATERIAL A-182-F304 OR F316

ASME CC-1 (EQUIVALENT)

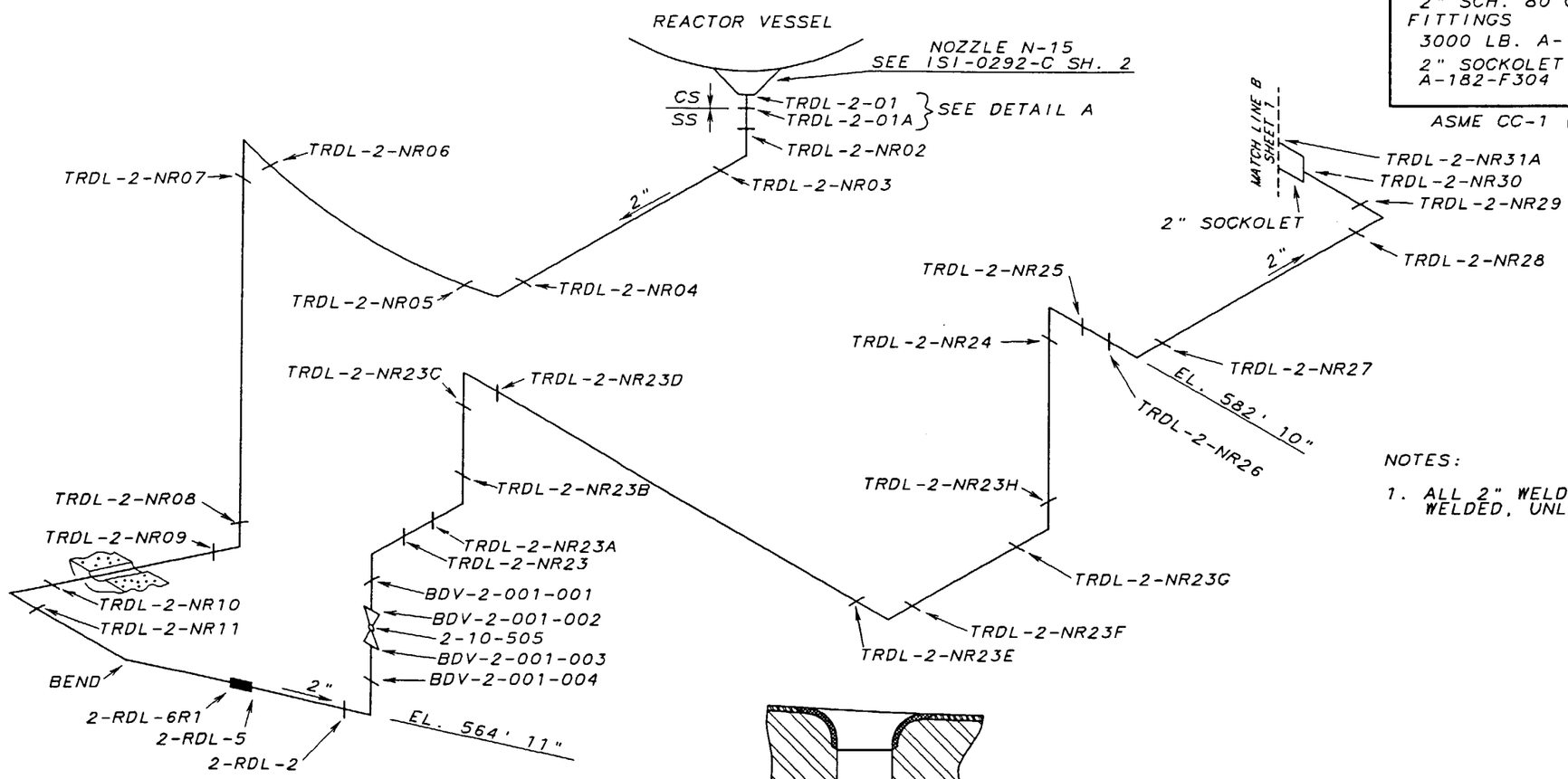

NOTES:

1. ALL 2" WELDS ARE SOCKET WELDED, UNLESS OTHERWISE NOTED.

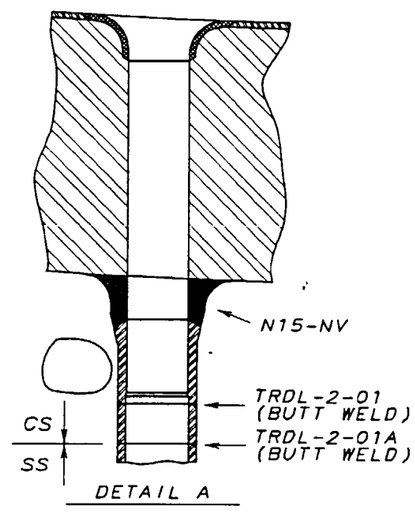

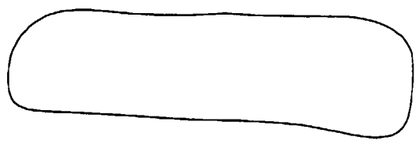

Information Only

REV	CHANGE REF	PREPARER	CHECKER	APPROVED	DATE
001	ADMIN	RDL	WCH	HEH	
REVISED PER RIMS MEMO R21 000821 001					

TENNESSEE VALLEY AUTHORITY

BROWNS FERRY NUCLEAR PLANT
UNIT 2
REACTOR WATER CLEAN UP, RCIC, AND CRD HYDR. RETURN LINE WELD LOCATIONS

DRAWN: PHB	DATE: 9-29-91	SCALE: NTS	CADAM/ISICMP
CHECKED: JAA	APPROVED: GLB	SHEET 02 OF 03	REV
SUBMITTED: JES		2-ISI-0272-C	001

CAD MAINTAINED DRAWING

CCD

ALL A/D HISTORY RESEARCHED AT R000

REFERENCE DRAWINGS:
47W456 SERIES
47B456 SERIES
2-47E813-1 FLOW DIAGRAM

MATERIAL SPECIFICATIONS:
PIPING
3" SCH. 160 A-106 GR. B
FITTINGS
3" SCH. 160 A234 GR. WPB

ASME CC-1 (EQUIVALENT)

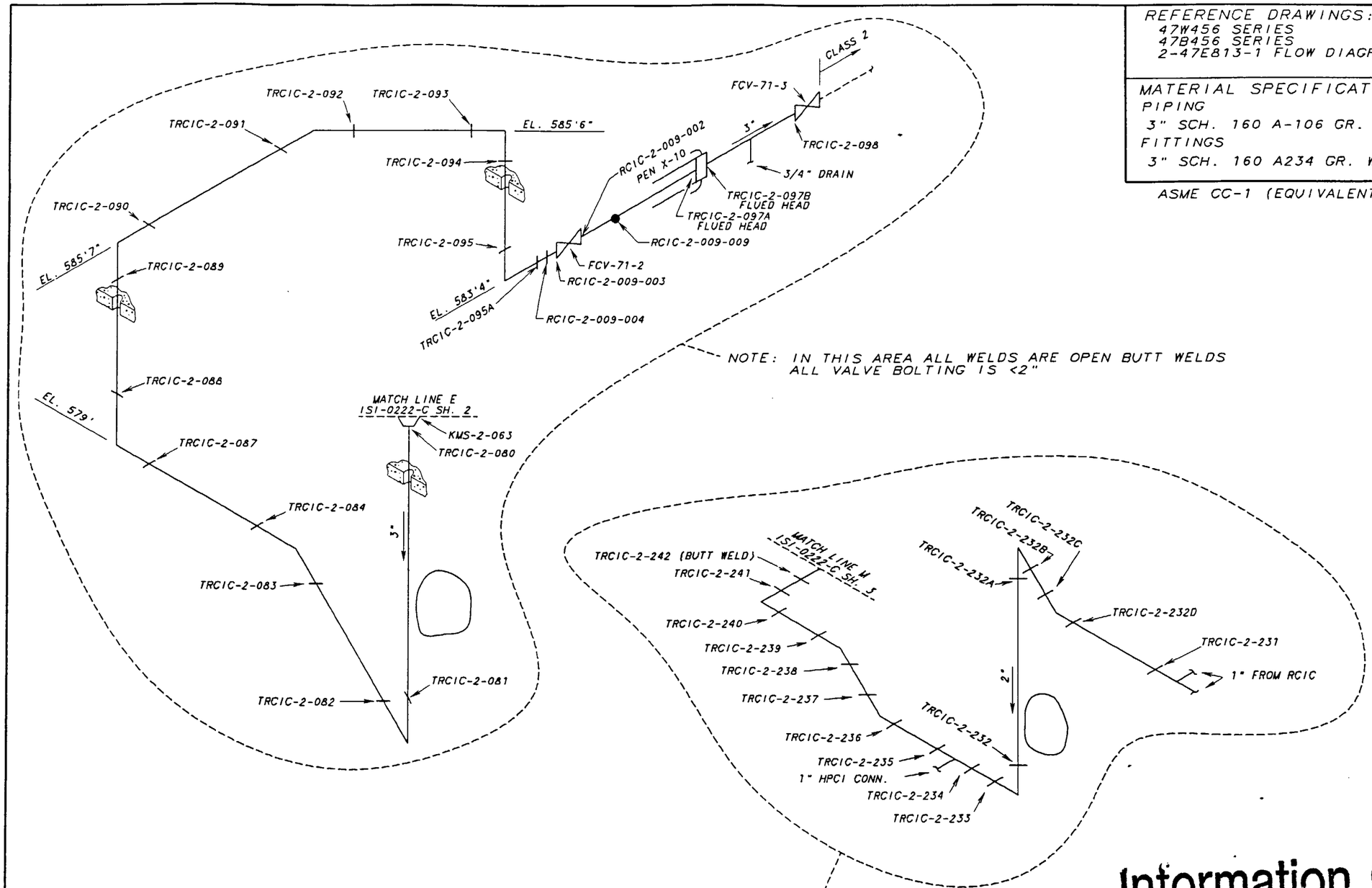

Information Only

REV	CHANGE REF	PREPARER	CHECKER	APPROVED	DATE
002	ADMIN	RDL	WCH	HEH	
REVISED FOR RIMS MEMO R21 000821 001					

TENNESSEE VALLEY AUTHORITY

BROWNS FERRY NUCLEAR PLANT
UNIT 2
REACTOR CORE ISOLATION COOLING SYSTEM
WELD LOCATIONS

DRAWN: PHB	DATE: 9-29-91	SCALE: NTS	CADAM/ISICMP
CHECKED: JAA	APPROVED: GLB	SHEET 03 OF 03	REV
SUBMITTED: JES		2-ISI-0272-C	002

CAD MAINTAINED DRAWING

CCD

ALL A/D HISTORY RESEARCHED AT R000

REFERENCE DRAWINGS
TVA 47W335-11
TVA 47W335-12
TVA 47K1547
ISI-0275-C (SH. 1) SUPPORT MAP

NOTE: THIS DRAWING SUPERSEDES CHM-2074-C ALL SHEETS

MATERIAL SPECIFICATIONS

16" X 1.031" NOM. WALL THK. CS
14" X 0.938" NOM. WALL THK. CS
10" X 0.593" NOM. WALL THK. CS

ASME CC-1 (EQUIVALENT)

RISK INFORMED WELD

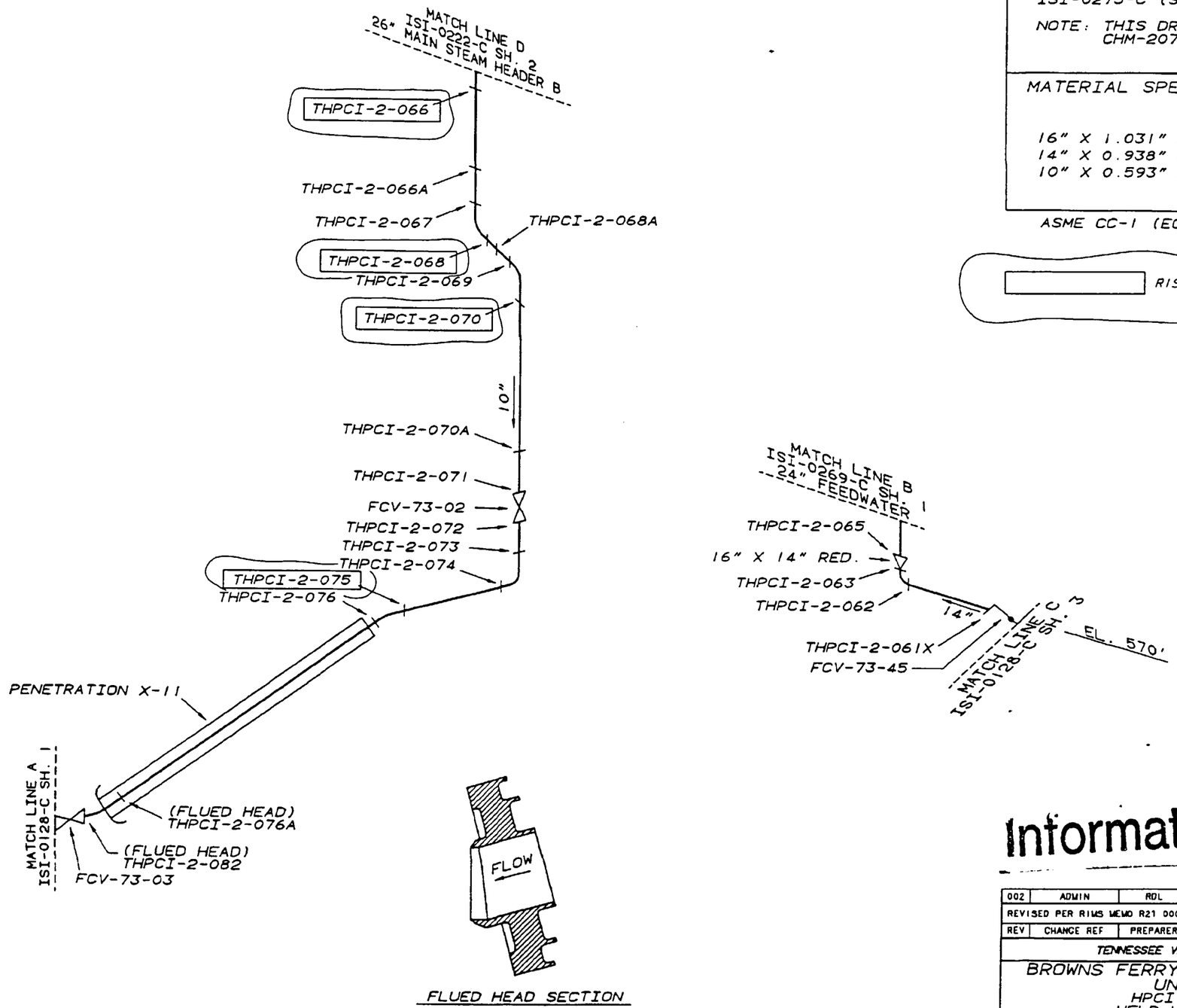

Information Only

002	ADMIN	RDL	WCH	HEH	
REVISED PER RIMS MEMO R21 000821 001					
REV	CHANGE REF	PREPARER	CHECKER	APPROVED	DATE

TENNESSEE VALLEY AUTHORITY

BROWNS FERRY NUCLEAR PLANT
UNIT 2
HPCI SYSTEMS
WELD LOCATIONS

DRAWN: PHB	DATE: 6-9-88	SCALE: NTS	CADAM/ISICNP
CHECKED: JES	APPROVED: GLB	SHEET 01 OF 01	REV
SUBMITTED: EDC		2-ISI-0273-C	002

ALL A/D HISTORY RESEARCHED AT R000

CAD MAINTAINED DRAWING

CCD

ASME CC-1 (EQUIVALENT)

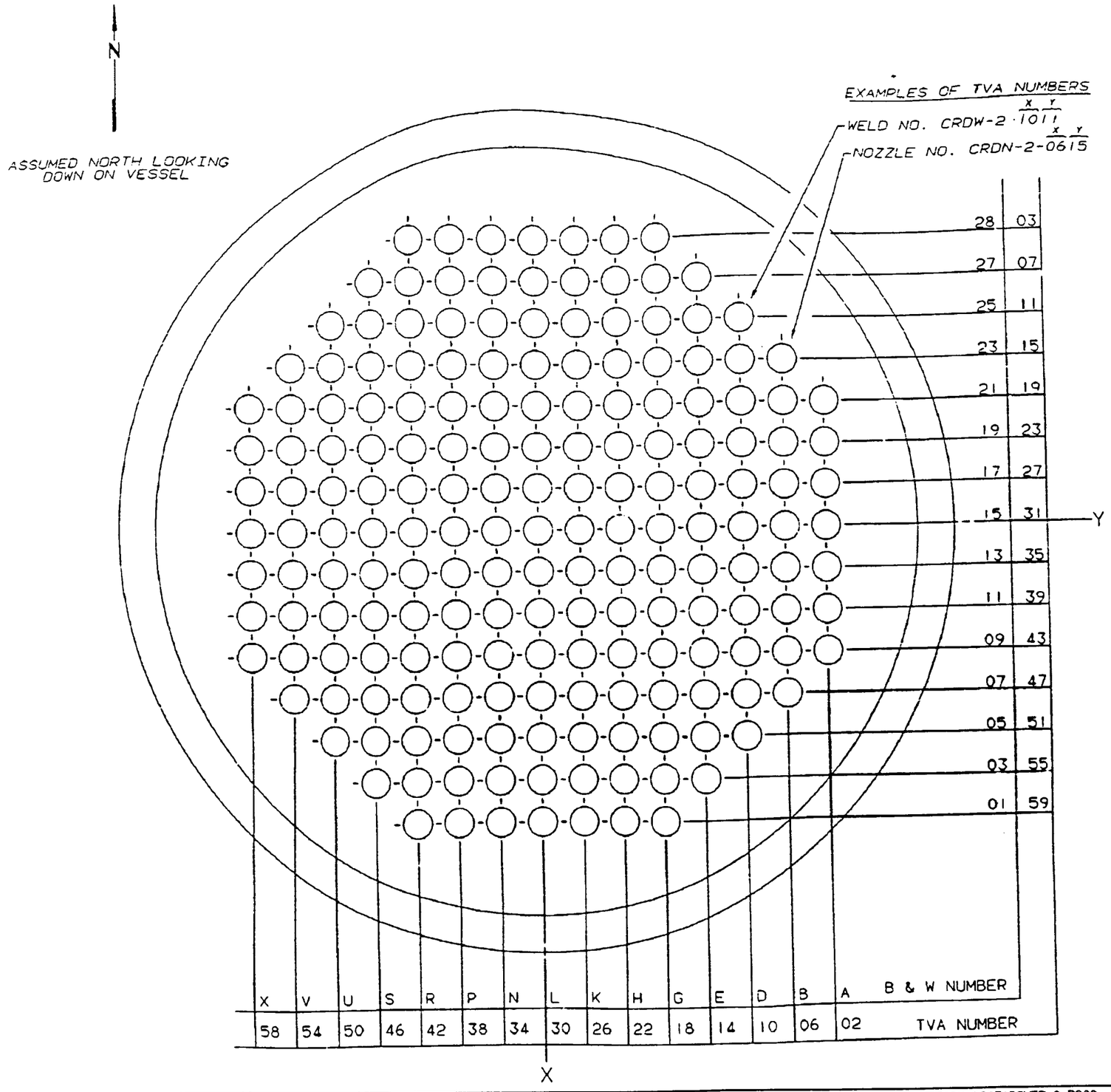

NOTES:

1. THIS DRAWING SUPERSEDES CHM-2002-C (UNIT 2)
2. NOZZLES ARE SPECIFIED BY CRDN-2-"X""Y"
3. WELDS ARE SPECIFIED BY CRDW-2 "X""Y"
4. BOLTING IS SPECIFIED BY CRDN-2-"X""Y"-BC.

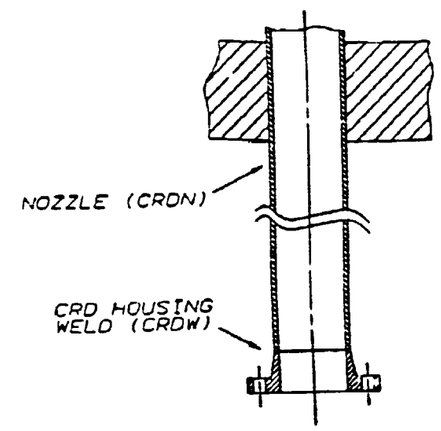

CRD HOUSING DETAIL

Information Only

REV NO.	CHANGE REF	DATE	DFTR	CHKR	DSGN	RVWR	1 APPD	2 APPD	3 APPD	ISSD
001	ADMIN		RDL		N/A		N/A	N/A		
	REVISED PER RIMS MEMO R14 870324 303									

HARDWARE: IBM 5085 SOFTWARE: CADAM USER: TSICHP

TENNESSEE VALLEY AUTHORITY

S BROWNS FERRY NUCLEAR PLANT UNIT 2
REACTOR VESSEL PENETRATIONS
CONTROL ROD DRIVE

DRAWN: PHB DATE: 2-13-89	SUBMITTED DATE 5-5-89	APPROVED DATE 5-17-89	SCALE NTS SHEET 01 OF 02 SHEET(S)
CHECKED: JES DATE: 5-4-89	EDC	GLB	DRAWING NO. 2-ISI-0292-C REV. 007

CCD

PCADAM

ALL A/D HISTORY RESEARCHED @ R000

ASME CC-1 (EQUIVALENT)

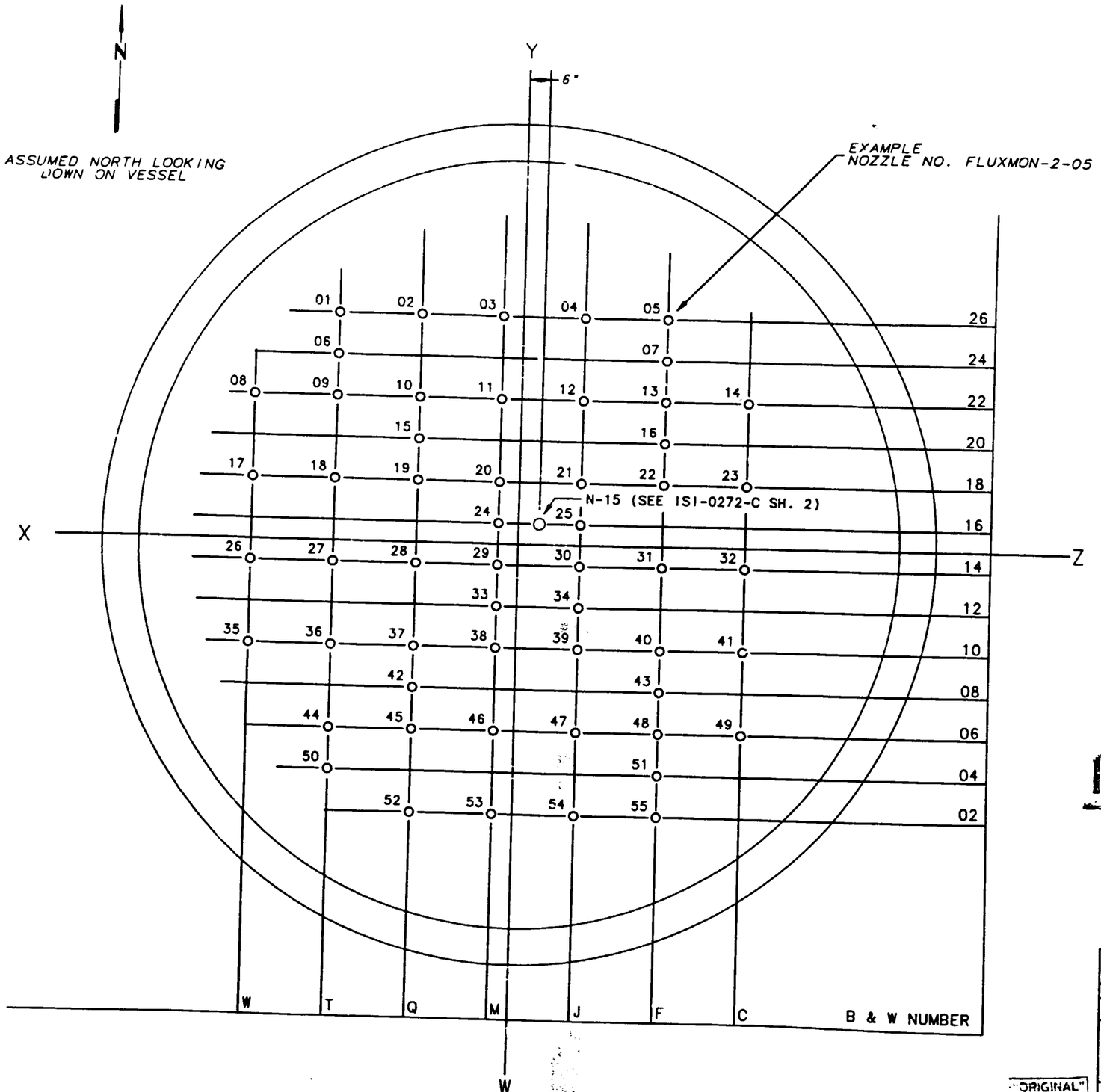

NOTE:

1. NOZZLES ARE SPECIFIED BY FLUXMON-2-XX.
2. BOLTED CONNECTIONS ARE SPECIFIED BY FLUXMON-2-XX-BC.

ADMIN

Information Only

1236818651
BFNR DRAWINGS
CC 2 2-ISI-0292-C
000002
042197 000

000	CCD ADMIN	4-21-97	RDL	JT	N/A	RLDW	N/A	N/A	RLD	RLW
	ISSUED TO CREATE CCD SUPERSEDES AS-DESIGNED ISI-0292-C-2 R3 AND TO DEPICT AS CONSTRUCTED STATUS PER RIMS MEMO 814 970324 3011 A/D R0-R1									
REV NO	CHANGE REF	DATE	DFTR	CHKR	DSGN	SVSR	1 APPD	2 APPD	3 APPD	1989
S	TENNESSEE VALLEY AUTHORITY									

BROWNS FERRY NUCLEAR PLANT
UNIT 2
REACTOR VESSEL PENETRATIONS
DRAIN NOZZLE & FLUX MONITOR NOZZLES

DRAWN: PHB	SUBMITTED	APPROVED	SCALE NTS
DATE: 3-13-92	DATE 3-13-92	DATE 3-13-92	SHEET 02 OF 02 SHEET(S)
CHECKED: RPG	JES	GLB	DRAWING NO. REV.
DATE:			2-ISI-0292-C 000

CCD

"ORIGINAL"

PCADAM

ALL A/D HISTORY RESEARCHED AT R000

REFERENCE DRAWINGS:
2-47E801-1

ASME CC-1 (EQUIVALENT)

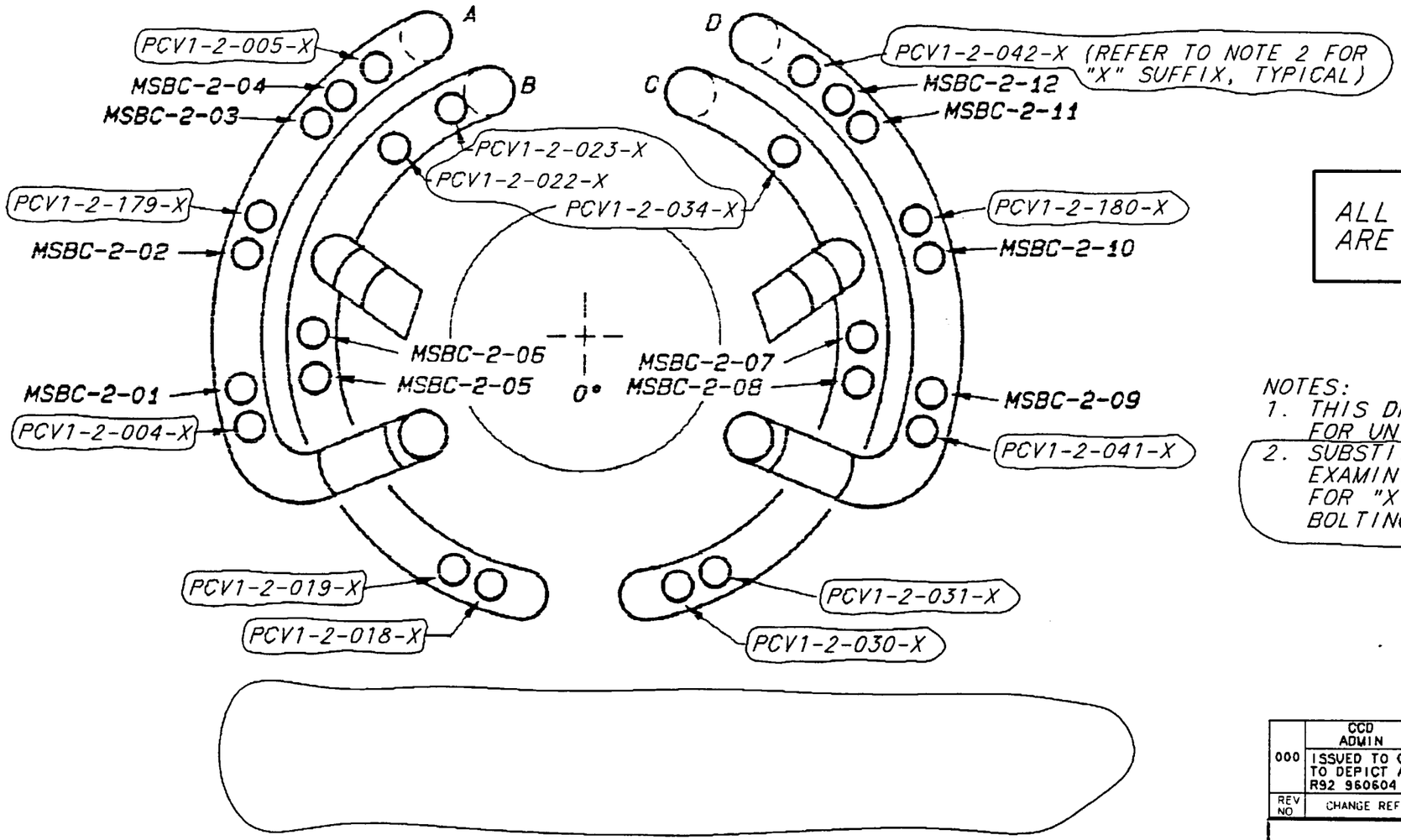

ALL REVISION CIRCLES ARE ADMINISTRATIVE REVISION

NOTES:
1. THIS DRAWING SUPERSEDES ISI-0027-B FOR UNIT 2 ONLY.
2. SUBSTITUTE "VBC" FOR "X" WHEN EXAMINING VALVE BODY BOLTING AND "PBC" FOR "X" WHEN EXAMINING VALVE TO PIPE BOLTING.

Information Only

REV NO	CHANGE REF	DATE	DFTR	CHKR	DSGN	RVWR	1 APPD	2 APPD	3 APPD	ISSD
000	CCD ADMIN		BGC		N/A		N/A	N/A		
	ISSUED TO CREATE CCD, SUPERSEDES AS-DESIGNED ISI-0312-B-1 R2 AND TO DEPICT AS-CONSTRUCTED STATUS PER A/D R0, R1; RIMS MEMO R92 960604 850 (ADMINISTRATIVE REVISION)									

TENNESSEE VALLEY AUTHORITY

S

BROWNS FERRY NUCLEAR PLANT
UNIT 2
MAINSTEAM SYSTEM
BOLTED CONNECTIONS

DRAWN: PHB	SUBMITTED	APPROVED	SCALE: NTS
DATE: *	DATE:	DATE:	SHEET 1 OF 1 SHEET(S)
CHECKED:	*	*	DRAWING NO. / REV
DATE: *			2-ISI-0312-B / 000
			CCD

HARDWARE	TEKTRONIX 4129
SOFTWARE	TEKNICAD 8.2
FLOPPY OR TAPE #	FLOPPY #BF4

* FOR ORIGINAL SIGNATURES AND PREVIOUS REV. INFO. SEE "ORIGINAL".

PROCAD

ALL A/D HISTORY RESEARCHED AT R000

NOTE:
THIS DRAWING SUPERSEDES MSG-0020-A
(UNIT 2 ONLY)

* APPROXIMATE DIMENSION.

* - FOR ORIGINAL SIGNATURES AND PREVIOUS REV. INFO. SEE "ORIGINAL".			
REV	01		
HARDWARE	TEKTRONIX 4129		
SOFTWARE	TEKNICAD 8.2		
FLOPPY OR TAPE #	FLOPPY #8F3		

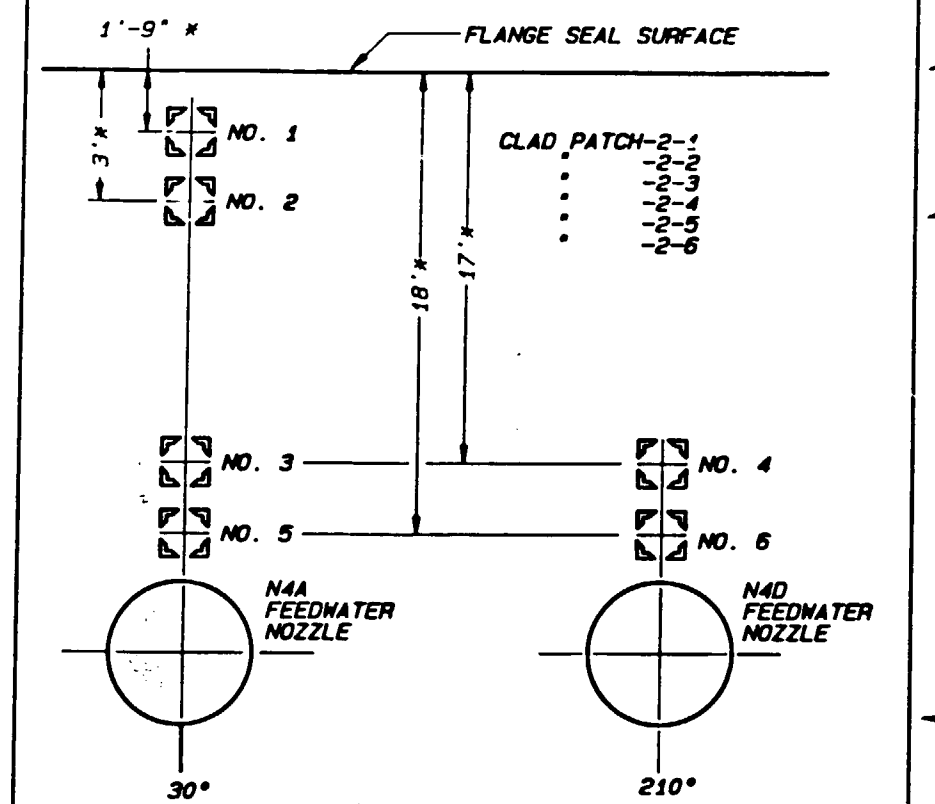

REV	BY	DATE	DESCRIPTION	TECHNICAL REV

TENNESSEE VALLEY AUTHORITY

BROWNS FERRY NUCLEAR PLANT
UNIT 2

REACTOR VESSEL CLAD PATCHES

TSI-0316-A 00

Information Only

8.5"

11"

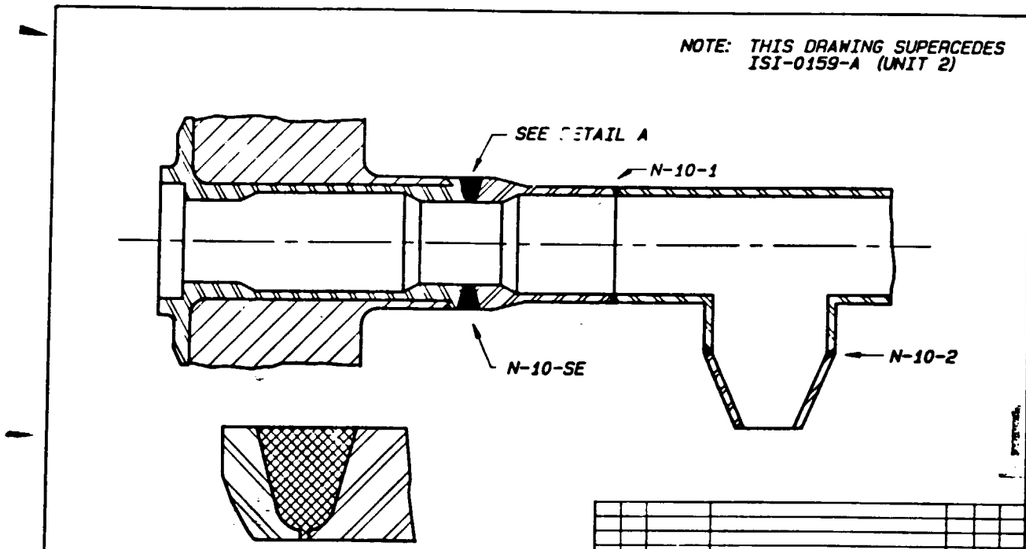

REV	00
HARDWARE	TEKTRONIX 4129
SOFTWARE	TEKNICAD 8.2
FLOPPY OR TAPE #	FLOPPY #BF22

REV.	BY	DATE	DESCRIPTION	CK'D	SUB	APP

TENNESSEE VALLEY AUTHORITY

BROWNS FERRY NUCLEAR PLANT
UNIT 2

CORE DIFFERENTIAL PRESSURE
AND LIQUID CONTROL NOZZLE
WELD LOCATIONS

DRAWN: PHB DATE: 10-11-88 | SUBMITTED: DATE: 3-23-92 | APPROVED: DATE: 4-13-92 | SCALE: NTS | SHEET 1 OF 1 SHEETS
CHECKED: DATE: 5-1-89 | EDC | DHB | DRAWING NO. ISI-0343-A | REV. 00

Information Only

17"

11"

8.5"

8.5"

11"

17"

NOTE: THIS DRAWING SUPERSEDES MSG-0019-A (UNIT 2 ONLY)
UNIT 2 RECIRC INLET NOZZLE SAFE-ENDS
WERE REPLACED IN * NOV. 1986

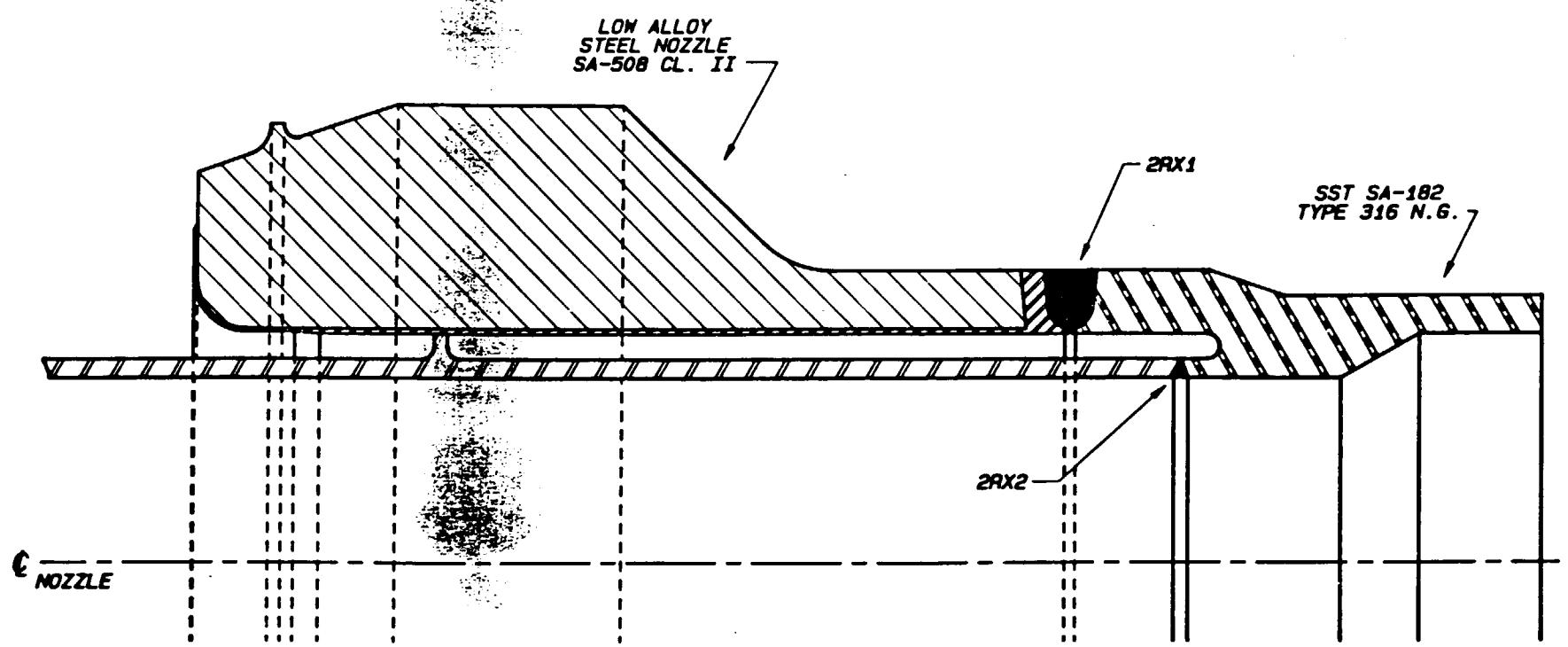

Information Only

REV	BY	DATE	DESCRIPTION	CK'D	SUB	APP

TENNESSEE VALLEY AUTHORITY

BROWNS FERRY NUCLEAR PLANT
UNIT 2
RECIRCULATION INLET NOZZLES

DRAWN: PHB	SUBMITTED	APPROVED	SCALE: NTS
DATE: 4-8-86	DATE: 5/5/86	DATE: 5/13/86	SHEET 1 OF 1 SHEET (S)
CHECKED: [illegible]	EDC	[illegible]	DRAWING NO. ISI-0347-B
DATE: 5-1-85			REV 00

REV	00		
HARDWARE	TEKTRONIX 4129		
SOFTWARE	TEKNICAD 8.2		
FLOPPY OR TAPE #	FLOPPY #BF-22		

17"
11"
8.5"
8.5"
11"
17"
17"

NOTE: THIS DRAWING SUPERSEDES ISI-0160-A (UNIT 2)

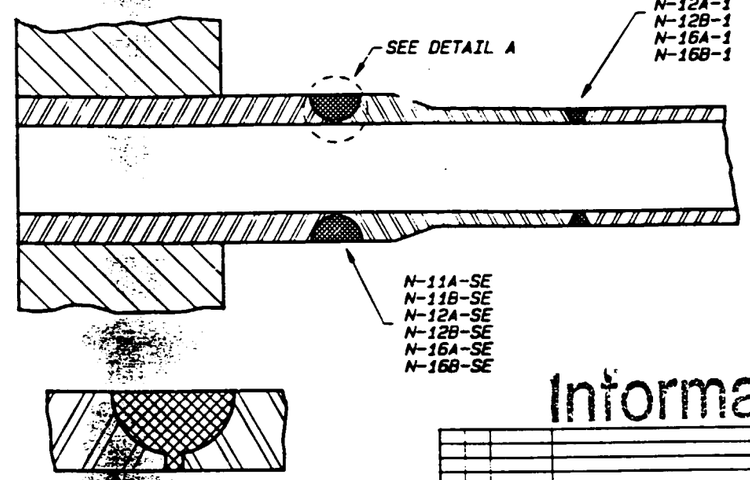

DETAIL A

Information Only

REV	00		
HARDWARE	TEKTRONIX 4129		
SOFTWARE	TEKNICAD 8.2		
FLOPPY OR TAPE #	FLOPPY 00F22		

TENNESSEE VALLEY AUTHORITY

BROWNS FERRY NUCLEAR PLANT
UNIT 2
INSTRUMENTATION NOZZLES
WELD LOCATIONS

TSI-0351-A 00

8.5"

11"

REFERENCE DRAWINGS:
47W462 SERIES
47B462 SERIES
2-47E854-1

MATERIAL SPECIFICATIONS:
PIPING
1 1/2" & 2" SCH. 80 A-312 TP 304
FITTINGS
A182 F304, SCH. 80

ASME CC-1 (EQUIVALENT)

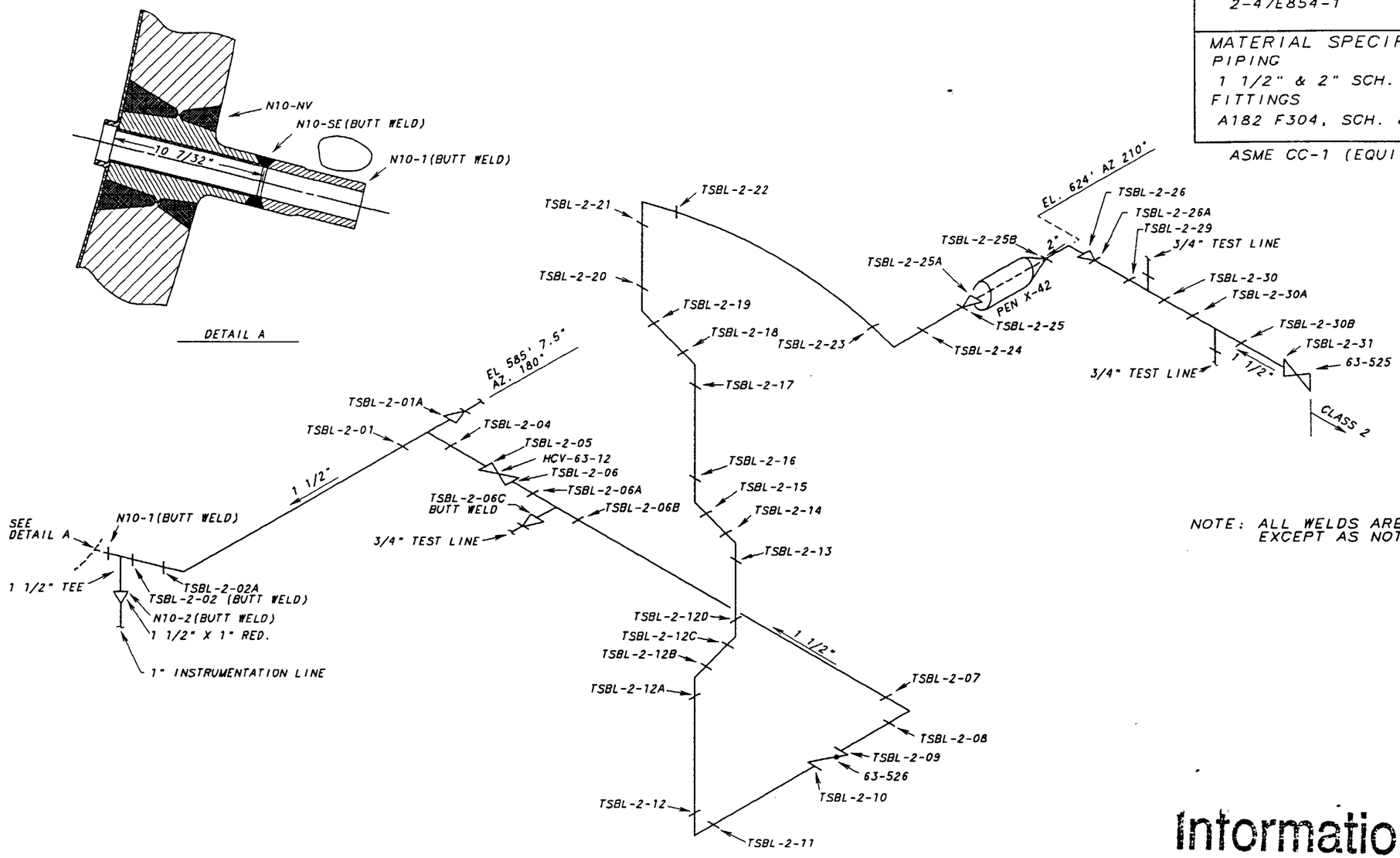

NOTE: ALL WELDS ARE SOCKET WELDED EXCEPT AS NOTED.

Information Only

REV	CHANGE REF	PREPARER	CHECKER	APPROVED	DATE
001	ADMIN	RDL	WCH	HEH	
REVISED PER RIMS MEMO R21 000821 001					

TENNESSEE VALLEY AUTHORITY

BROWNS FERRY NUCLEAR PLANT
UNIT 2
STANDBY LIQUID CONTROL 1" TO 3"
WELD LOCATIONS

DRAWN: PHB	DATE: 9-29-91	SCALE: NTS	CADAM/ISICMP
CHECKED: JAA	APPROVED: GLB	SHEET 01 OF 01	REV
SUBMITTED: JES		2-ISI-0380-C	001

CAD MAINTAINED DRAWING

CCD

ALL A/D HISTORY RESEARCHED AT R000

REFERENCE DRAWINGS:
2-47E803-5
2-47W2650-100
2-47E600-602
47BM600-SERIES
0-47W600-20

MATERIAL SPECIFICATIONS:
PIPING
A312 OR A376 GR. TP-304 OR TP-316
SCH. 80
FITTINGS
A182 GR. F-316

ASME CC-1 (EQUIVALENT)

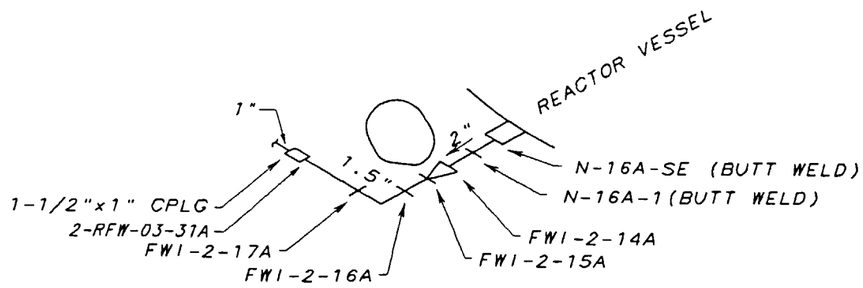

NOZZLE N-16A
REF. DWG. ISI-0351-A

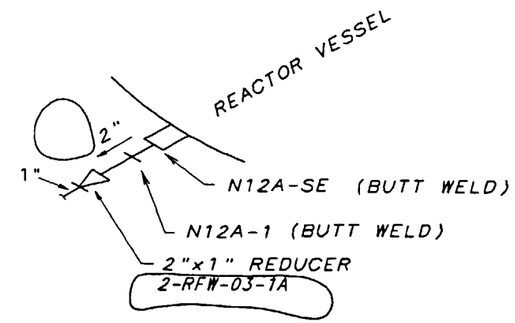

NOZZLE N-12A
REF. DWG. ISI-0351-A

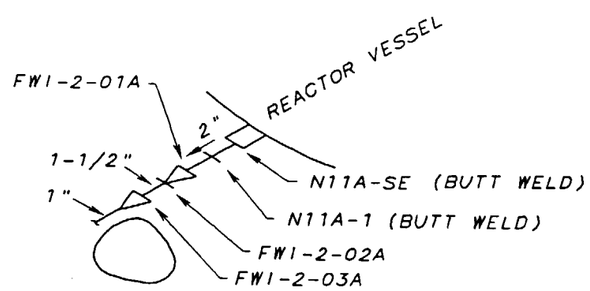

NOZZLE N-11A
REF. DWG. ISI-0351-A

Information Only

REV	CHANGE REF	PREPARER	CHECKER	APPROVED	DATE
001	ADMIN	RDL	RLD	HEH	
REVISED PER RIMS MEMO R21 000821 001					

TENNESSEE VALLEY AUTHORITY

BROWNS FERRY NUCLEAR PLANT
UNIT 2
FEEDWATER INSTRUMENTATION
WELD LOCATIONS

DRAWN: PHB	SUBMITTED	APPROVED	SCALE NTS
DATE: 9-11-91	DATE: 9-20-91	DATE: 9-29-91	SHEET 01 OF 02 SHEET(S)
CHECKED: JH	JES	GLB	DRAWING NO. 2-ISI-0383-C
DATE: 9-20-91			REV. 001

CAD MAINTAINED DRAWING

CCD

ALL A/D HISTORY RESEARCHED AT R000

REFERENCE DRAWINGS:
2-47E803-5
2-47W2650-100
2-47E600-601
47BM600-SERIES
0-47W600-20

MATERIAL SPECIFICATIONS:
PIPING
A312 OR A376 GR. TP-304 OR TP-316
SCH. 80
FITTINGS
A182 GR. F-316

ASME CC-1 (EQUIVALENT)

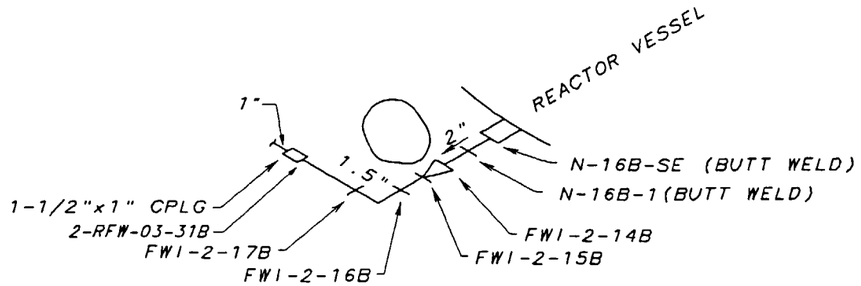

NOZZLE N-16B
REF. DWG. 1SI-0351-A

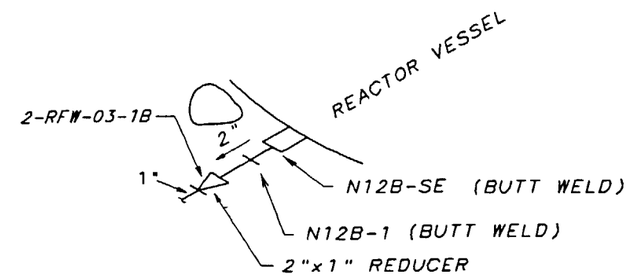

NOZZLE N-12B
REF. DWG. 1SI-0351-A

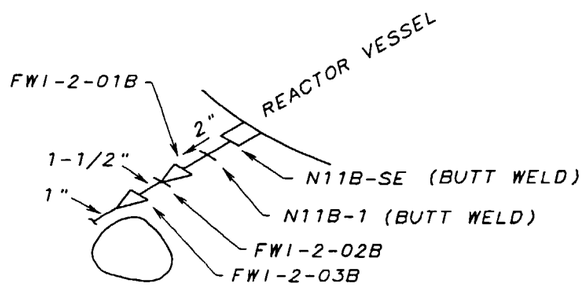

NOZZLE N-11B
REF. DWG. 1SI-0351-A

Information Only

REV	CHANGE REF	PREPARER	CHECKER	APPROVED	DATE
001	ADMIN	RDL	RLD	HEH	
REVISED PER RIMS MEMO R21 000821 001					

TENNESSEE VALLEY AUTHORITY

BROWNS FERRY NUCLEAR PLANT
UNIT 2
FEEDWATER INSTRUMENTATION
WELD LOCATIONS

DRAWN: PHB	SUBMITTED	APPROVED	SCALE NTS
DATE: 9-17-91	DATE: 9-20-91	DATE: 9-29-91	SHEET 02 OF 02 SHEET(S)
CHECKED: JH	JES	GLB	DRAWING NO. 2-1SI-0383-C REV. 001
DATE: 9-20-91			

CAD MAINTAINED DRAWING

CCD

ALL A/D HISTORY RESEARCHED AT R000

REFERENCE DRAWINGS
69-BF-165 PERFEX CORP.
69-D-160-05 PERFEX CORP.
NOTE: THIS DRAWING SUPERSEDES ISI-0314-B

MATERIAL SPECIFICATIONS
AS NOTED

ASME CC-2 (EQUIVALENT)

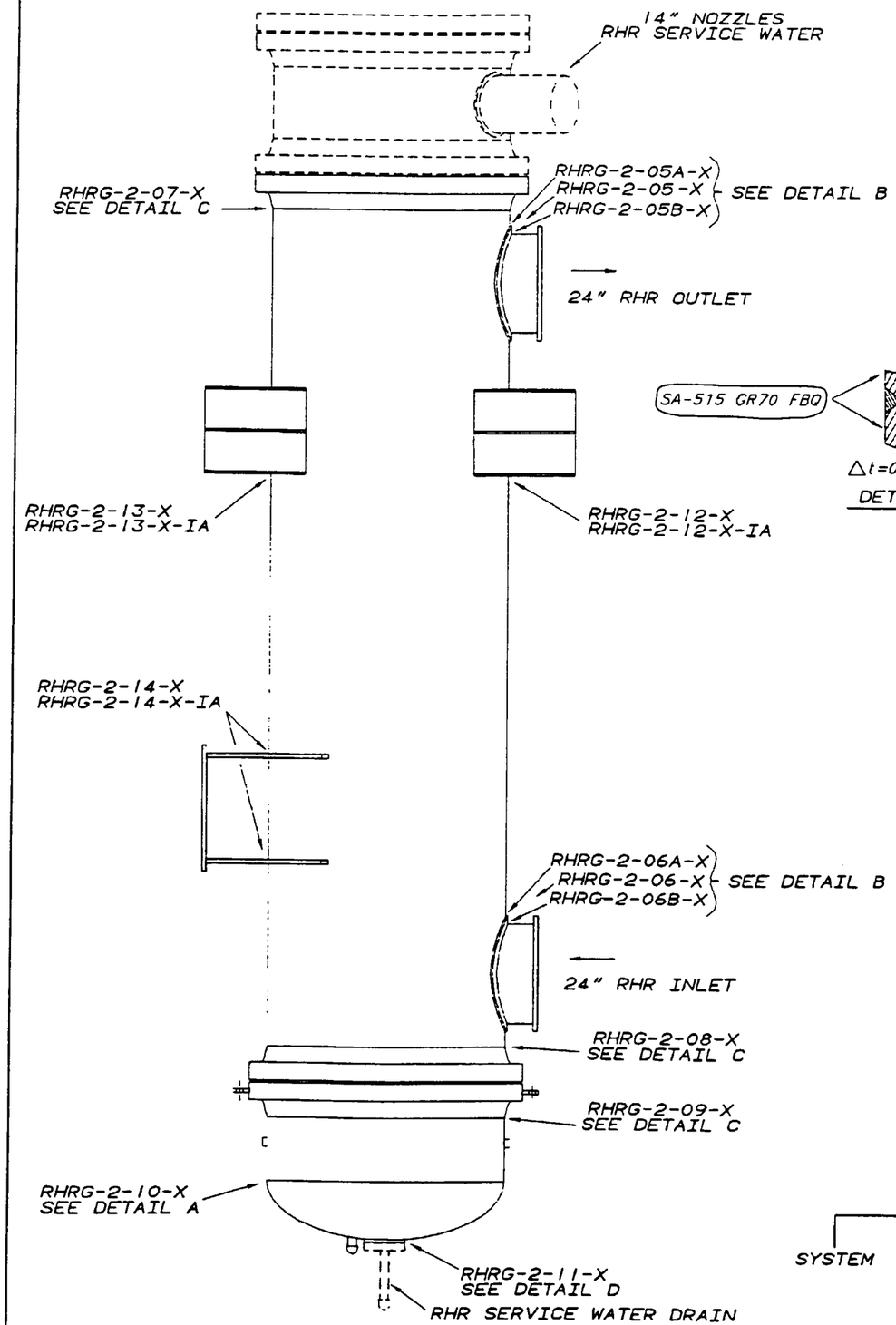

DETAIL A

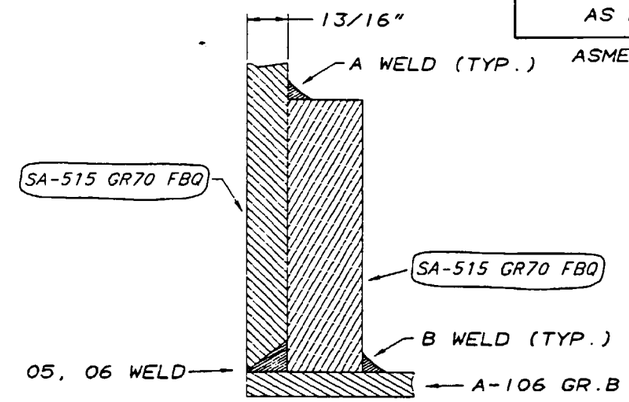

DETAIL B

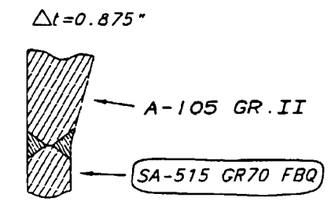

DETAIL C

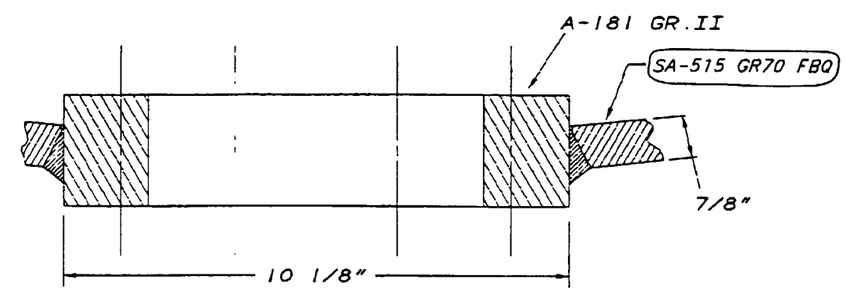

DETAIL D

Information Only

RHRG-2- -X
SYSTEM
UNIT
WELD NO.
HEAT EXCHANGER LETTER (A,B,C,OR D)

REV	CHANGE REF	PREPARER	CHECKER	APPROVED	DATE
001	ADMIN	RGP	JT	RLD/H	
REVISED FOR RIMS MEMO R21 990604 007, REMOVED DRAWING CLASSIFICATION (ADMINISTRATIVE REVISION)					

TENNESSEE VALLEY AUTHORITY

BROWNS FERRY NUCLEAR PLANT
UNIT 2
RESIDUAL HEAT REMOVAL HEAT EXCHANGER
WELD LOCATIONS

DRAWN: PHB	DATE: 3-13-92	SCALE: NTS	CADAM/ISICMP
CHECKED: RPG	APPROVED: GLB	SHEET 01 OF 01	REV
SUBMITTED: JES		2-ISI-0406-C	001
		CCD	

PCADAM

ALL A/D HISTORY RESEARCHED AT R000

REFERENCE DRAWINGS
2F-1177 BYRON JACKSON DIV. BORG-WARNER
1E-3429 BYRON JACKSON DIV. BORG-WARNER
153F754 GENERAL ELECTRIC

ASME CC-1 (EQUIVALENT)

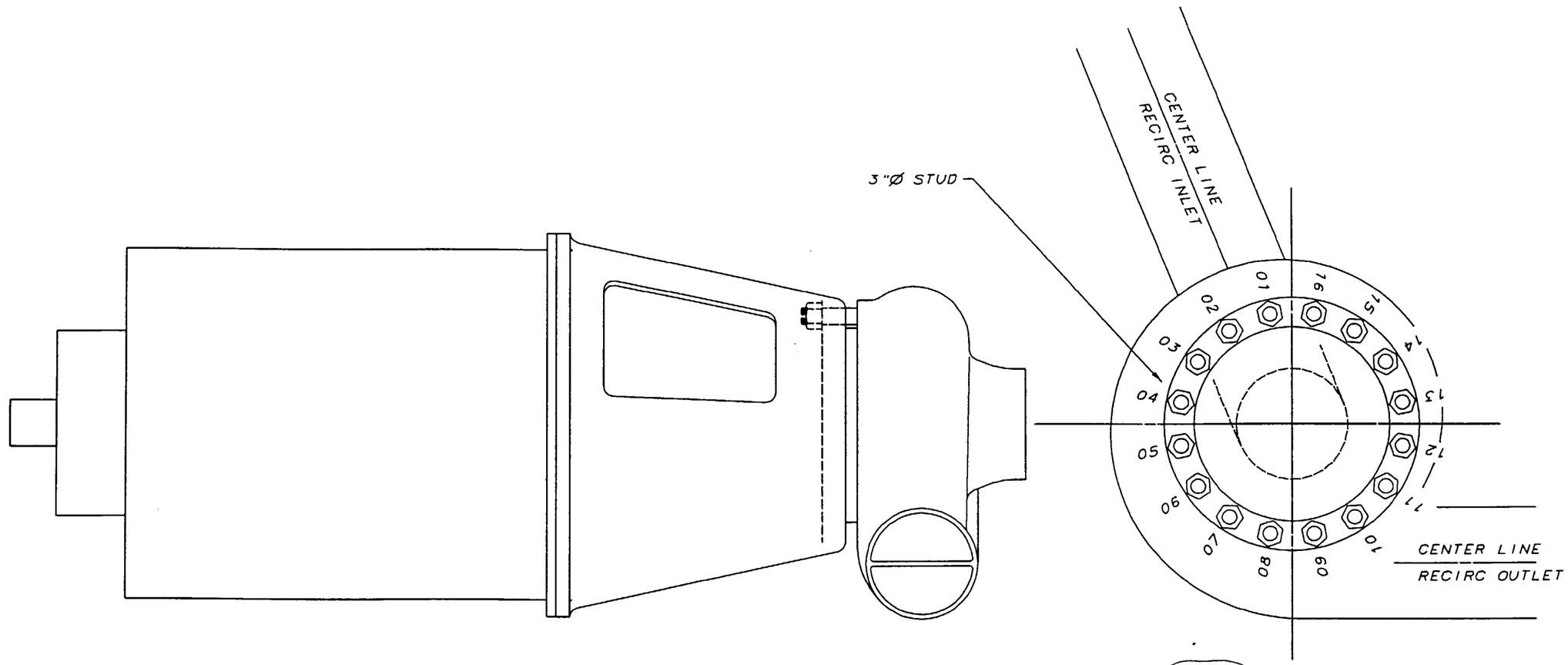

NOTE:
1. MATERIAL ASTM A540 GR B23.

PUMP A

NUMBERS (01-16) ARE PREFIXED BY:

PUMP A.....PMP-A-STUD-2-
PUMP A.....PMP-A-NUT-2-
PUMP A.....PMP-A-WASH-2-
PUMP A.....PMP-A-FLG-2-

PUMP B

NUMBERS (01-16) ARE PREFIXED BY:

PUMP B.....PMP-B-STUD-2-
PUMP B.....PMP-B-NUT-2-
PUMP B.....PMP-B-WASH-2-
PUMP B.....PMP-B-FLG-2-

PUMP A

PUMP INTERIOR IDENTIFIERS:

PUMP A.....PMP-2A-INTERIOR

PUMP B

PUMP INTERIOR IDENTIFIERS:

PUMP B.....PMP-2B-INTERIOR

Information Only

REV NO	CHANGE REF	DATE	DFTR	CHKR	DSGN	RVWR	1 APPD	2 APPD	3 APPD	ISSD
000	CCD ADMIN		RGL		N/A		N/A	N/A		
	ISSUED TO CREATE CCD SUPERSEDES AS-DESIGNED 131-0407-C-1 R1 AND TO DEPICT AS CONSTRUCTED STATUS PER RIMS MEMO R14 970503 307; A/D R0									

S TENNESSEE VALLEY AUTHORITY

BROWNS FERRY NUCLEAR PLANT
UNIT 2
RECIRCULATION PUMP
BOLTING LOCATIONS & PUMP INTERIORS

DRAWN: PHB	SUBMITTED	APPROVED	SCALE NTS
DATE: 3-13-92	DATE:	DATE:	SHEET 01 OF 01 SHEET(S)
CHECKED: BPG	JES	GPB	DRAWING NO. 2-1SI-0407-C REV. 000
DATE:			CCD

PCADAM

ALL A/D HISTORY RESEARCHED AT R000

REFERENCE DRAWINGS
B&W 122876
B&W 122877
NOTE: THIS DRAWING SUPERSEDES ISI-0294-A SH 1

MATERIAL SPECIFICATIONS

CLOSURE HEAD DOME/SEGMENTS
CS MN/MO

N-7
NOZZLE - A508 CL.2 (MN-MO)
LONG WELD NECK - SA-105 GR.II CS

N6A, N6B
NOZZLE - A508 CL.2 (MN-MO)
LONG WELD NECK - SA-105 GR.II CS

ASME CC-1 (EQUIVALENT)

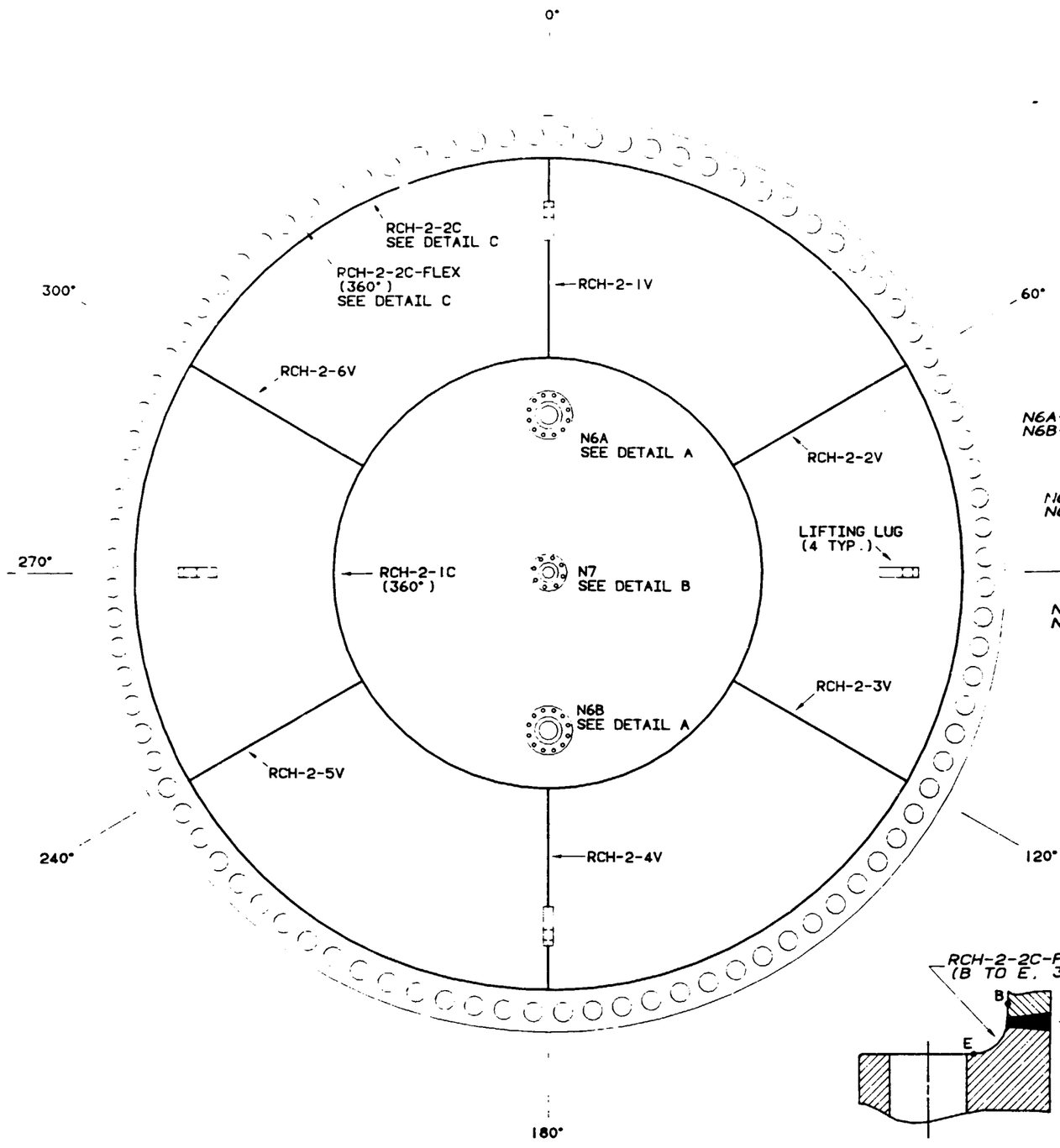

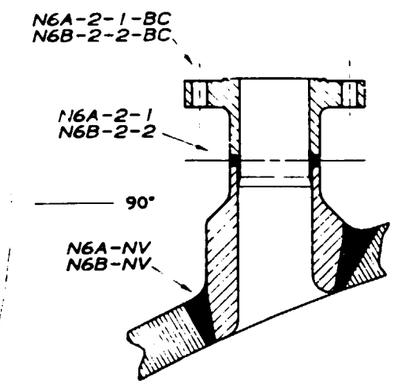

DETAIL A

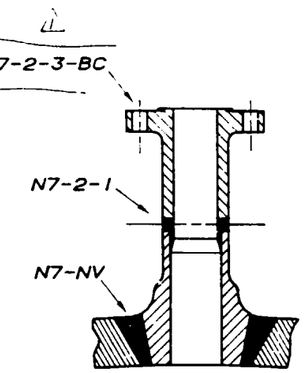

DETAIL B

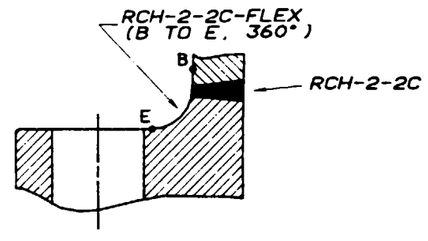

DETAIL C

Information Only

REV.	BY	CHECKED	SUBMITTED	APPROVED	DATE
1	PHB				

REVISE NOZZLE N7 BOLTED CONNECTION ID

HARDWARE: IBM 5085 | SOFTWARE: CADAM | USER: ISICMP

TENNESSEE VALLEY AUTHORITY

BROWNS FERRY NUCLEAR PLANT
UNIT 2
CLOSURE HEAD ASSEMBLY
WELD LOCTIONS

DRAWN: PHB	SUBMITTED	APPROVED	SCALE NTS
DATE: 3-13-92	DATE 3-13-92	DATE 3-13-92	SHEET 01 OF 01 SHEET(S)
CHECKED: RPG	JES	GLB	DRAWING NO. ISI-0408-C01 REV.
DATE			

REFERENCE DRAWINGS
0-112D3838 GE (84P64-B835271)
769E957 GE (84P64-B835271)
CHM-2046-C (NOZZLE LOCATIONS)

NOTE:
THIS DRAWING SUPERSEDES
ISI-0156-A

MATERIAL SPECIFICATIONS
DISSIMILAR METAL WELD

ASME CC-1 (EQUIVALENT)

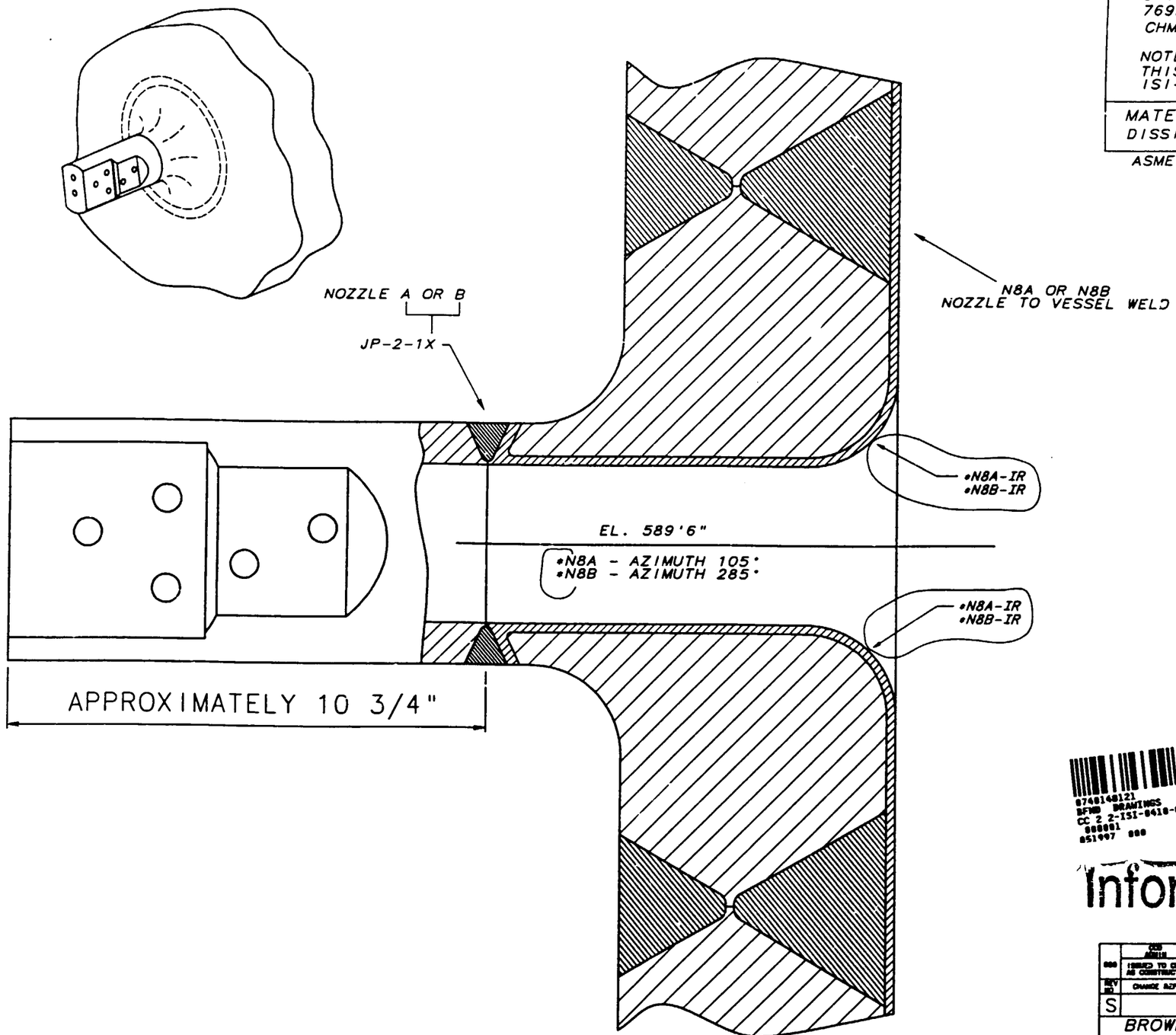

0740148121
BFND DRAWINGS
CC 2 2-ISI-0410-C
000001
051997 000

Information Only

"ORIGINAL"

REV NO	CHANGE REF	DATE	BFTR	CHKR	DSGN	RVWR	1 APPD	2 APPD	3 APPD	ISSD
000	CCD ADMIN	5/19/97	RBL	JT	N/A	RLD	N/A	N/A	RLD	
	ISSUED TO CREATE CCD SUPERSEDES AS-DESIGNED ISI-0410-C-1 R2 AND TO DEPICT AS CONSTRUCTED STATUS PER RIMS MEMO R14 [illegible] 300; A/D R0-01									

S TENNESSEE VALLEY AUTHORITY

BROWNS FERRY NUCLEAR PLANT
UNIT 2
JET PUMP INSTRUMENTATION NOZZLE
WELD LOCATIONS

DRAWN: PHB	DATE: 3-13-93	SCALE: NTS	CADAM/ISICMP
CHECKED: RPG	APPROVED: GLB	SHEET 01 OF 01	REV
SUBMITTED: JES		2-ISI-0410-C	000
		CCD	

P:\CADAM

ALL A/D HISTORY RESEARCHED AT R000

REFERENCE DRAWINGS
GE SKETCH SK-B2008
B&W 122856E-11
B&W 122859E-10
GE SKETCH SK-B2022
GE SKETCH SK-B2023

MATERIAL SPECIFICATIONS

BOTTOM HEAD
CS MN/MO

N10
NOZZLE - A508 CL.2 (MN-MO)

N15
NOZZLE - SA-105

ASME CC-1 (EQUIVALENT)

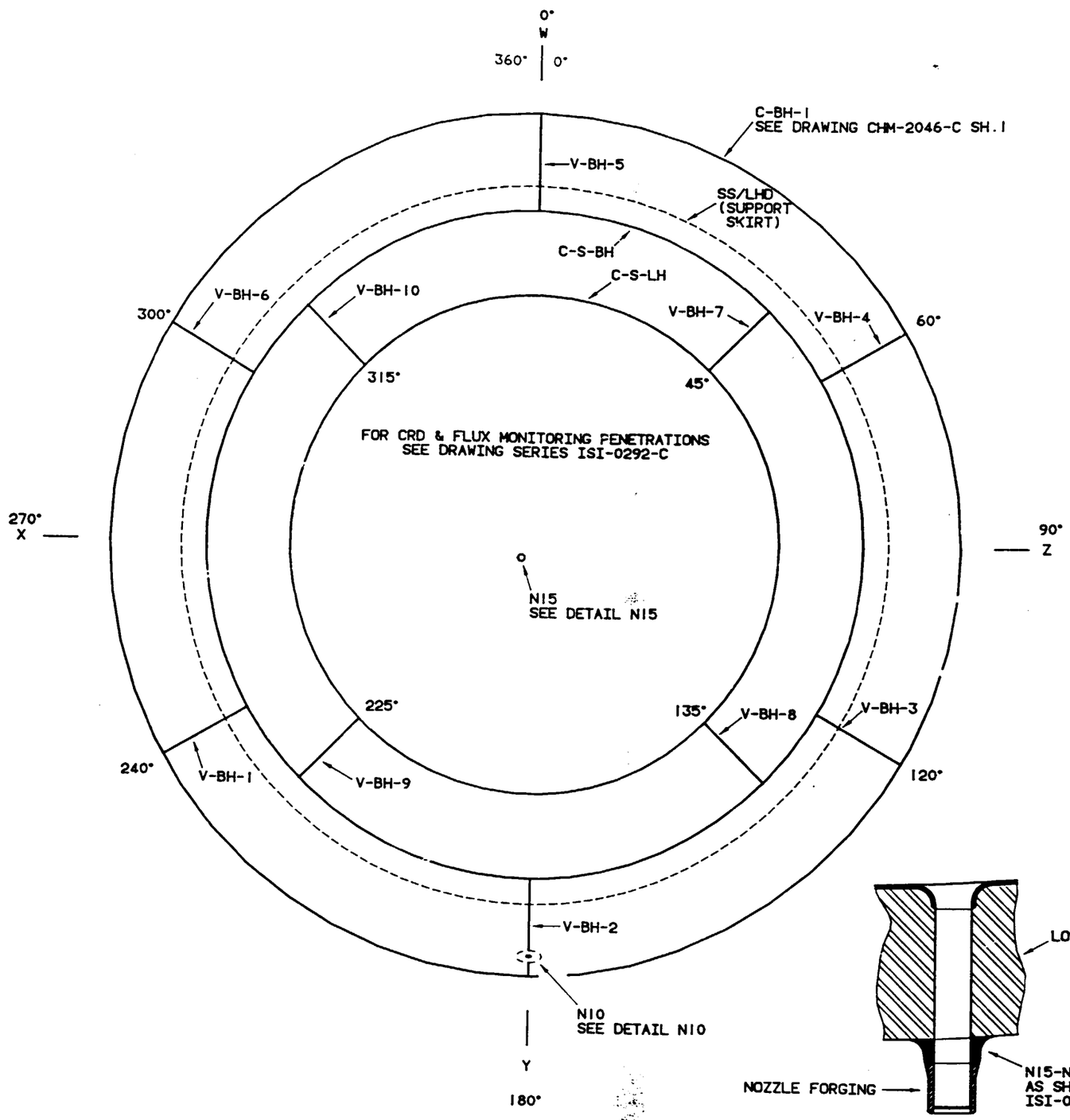

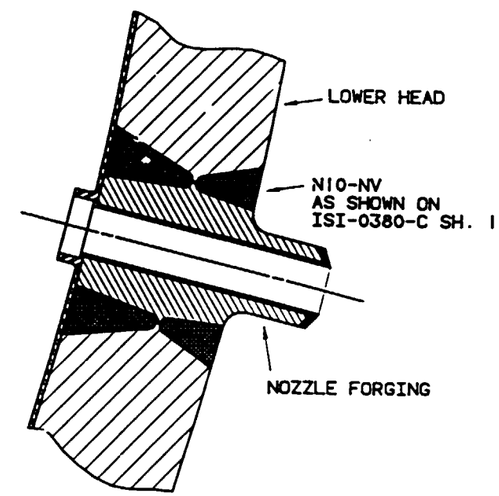

DETAIL N10

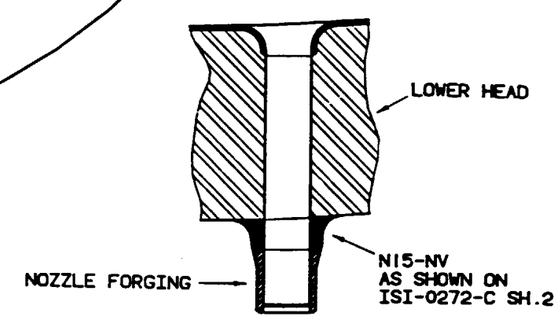

DETAIL N15

Information Only

REV.	BY	CHECKED	SUBMITTED	APPROVED	DATE

TENNESSEE VALLEY AUTHORITY

BROWNS FERRY NUCLEAR PLANT
UNIT 2
BOTTOM HEAD ASSEMBLY
WELD LOCTIONS

DRAWN: PHB	DATE: 01/20/94	SCALE: NTS	CADAM/ISICMP
CHECKED:	APPROVED:	SHEET 01 OF 01	REV
SUBMITTED:		ISI-0444-C	00

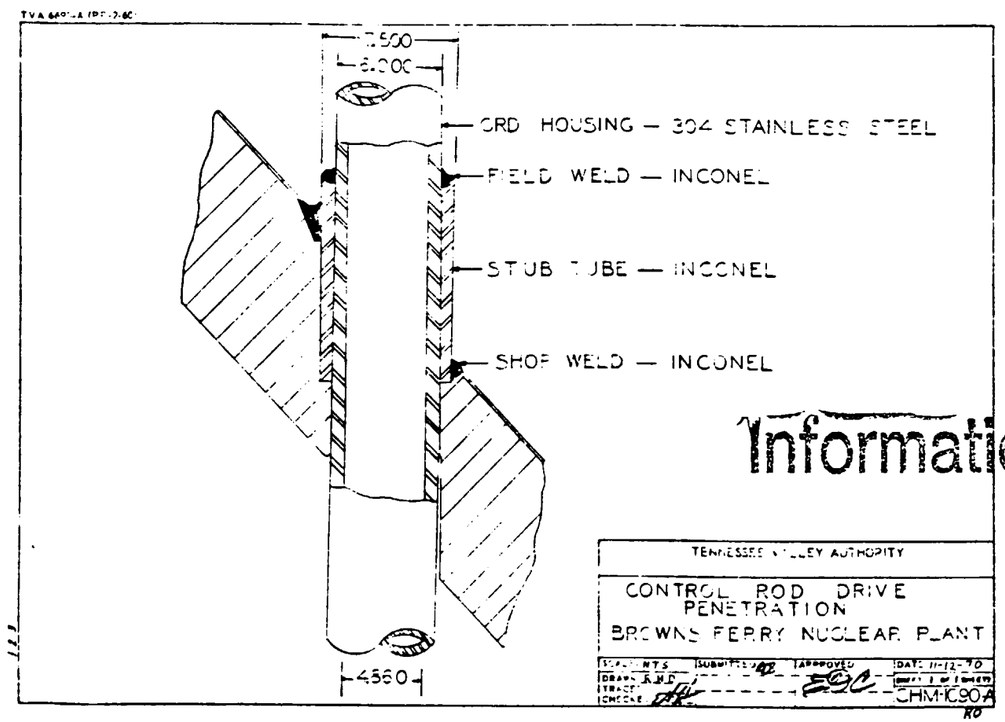

Information Only

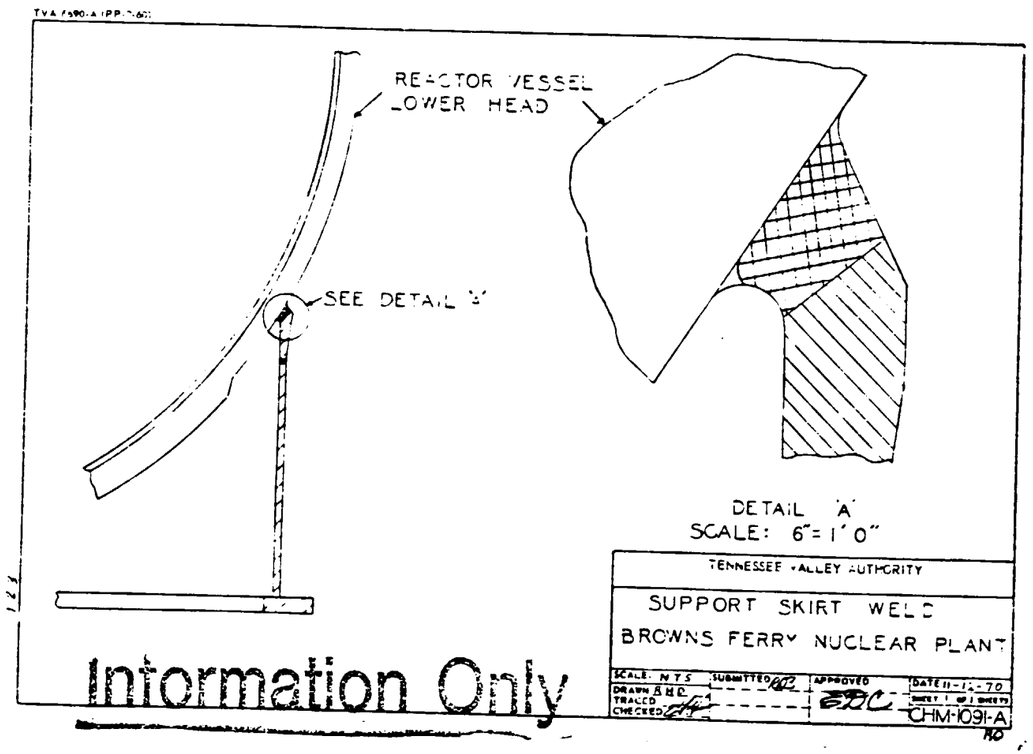

Information Only

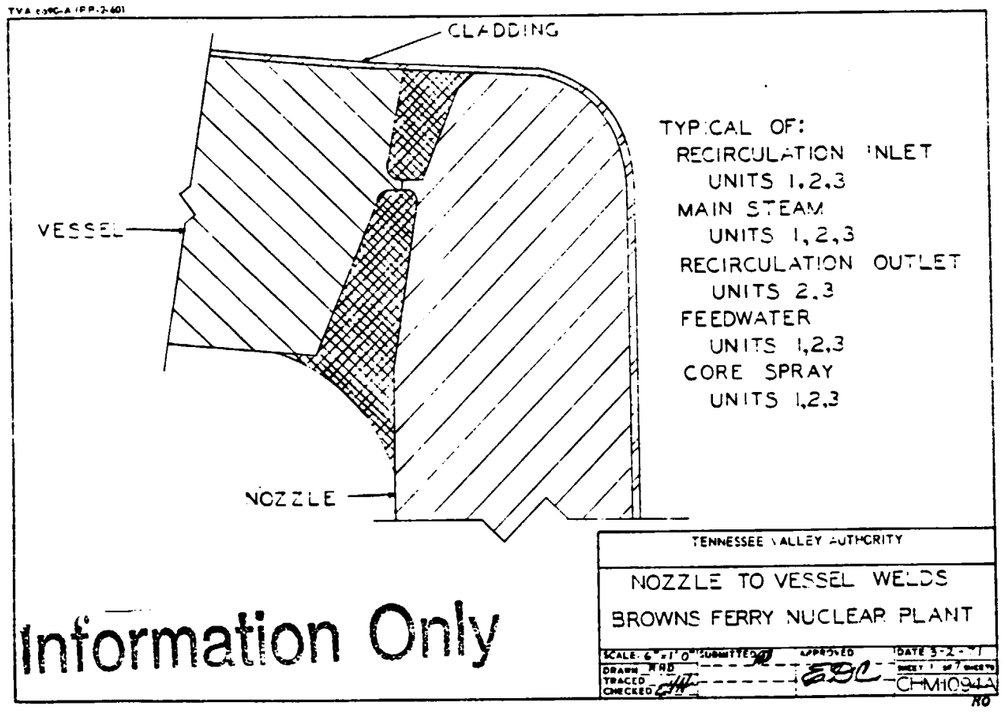

Information Only

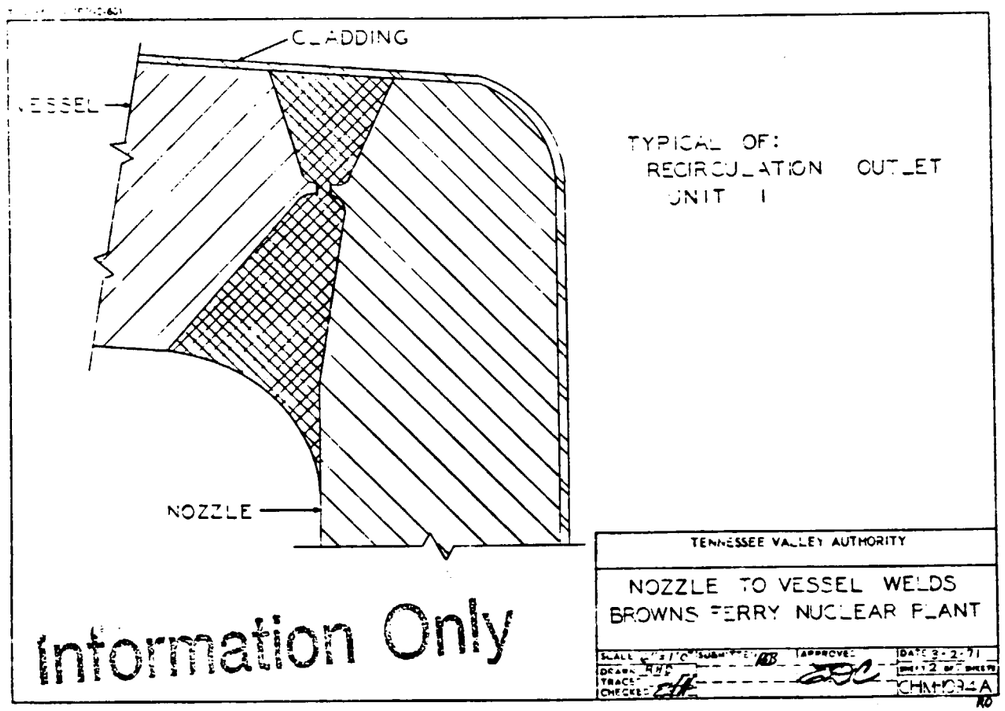

Information Only

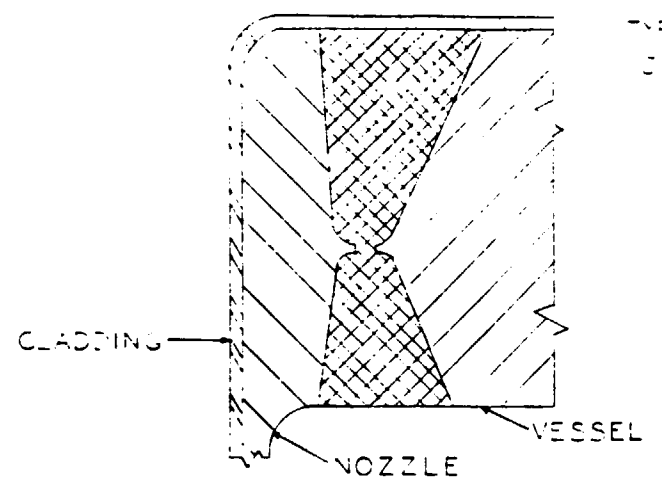

TYPICAL OF:
JET PUMP INSTRUMENTATION
UNIT 1

Information Only

TENNESSEE VALLEY AUTHORITY

NOZZLE TO VESSEL WELDS
BROWNS FERRY NUCLEAR PLANT

SCALE 6" = 1'0" | SUBMITTED | APPROVED | DATE 3-2-71
DRAWN RHD | SHEET 3 OF 7 SHEETS
TRACE
CHECKED

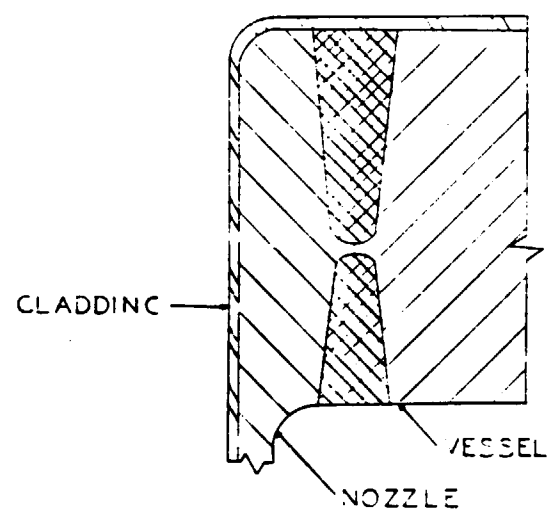

TYPICAL OF:
JET PUMP INSTRUMENTATION
UNITS 2,3

Information Only

TENNESSEE VALLEY AUTHORITY

NOZZLE TO VESSEL WELDS
BROWNS FERRY NUCLEAR PLANT

SCALE 6" = 1'0" SUBMITTED APPROVED DATE 3-2-71
DRAWN RHD
TRACT
CHECKED
SHEET 4 OF 7 SHEETS
CHM-1D-1A

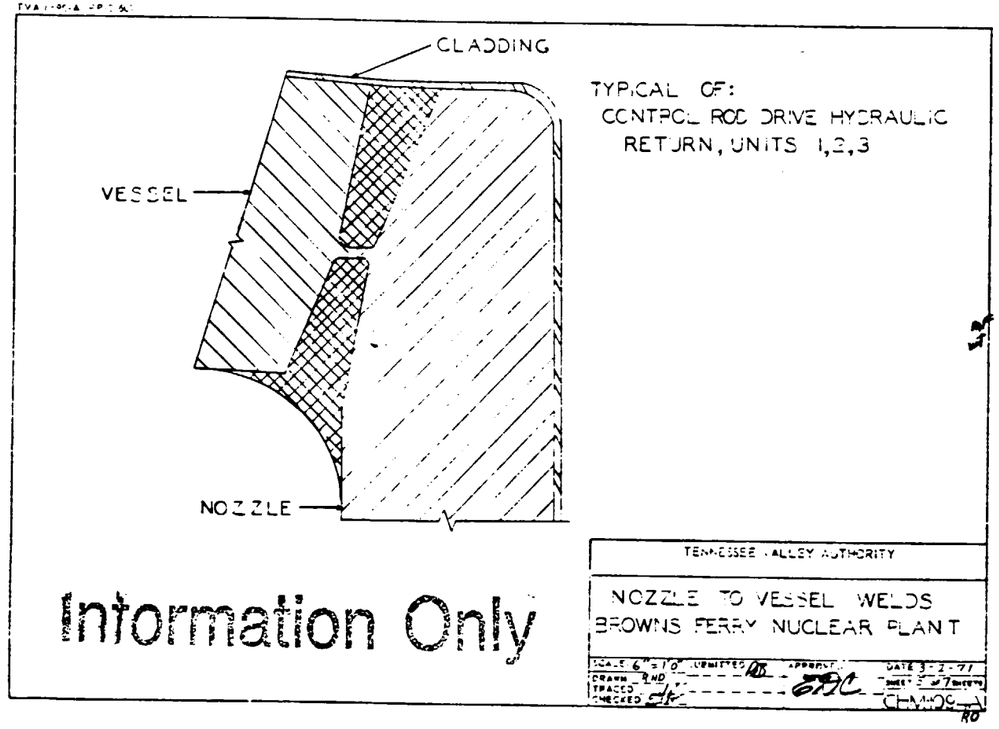
CLADDING
VESSEL
NOZZLE
TYPICAL OF:
CONTROL ROD DRIVE HYDRAULIC
RETURN, UNITS 1,2,3
TENNESSEE VALLEY AUTHORITY
NOZZLE TO VESSEL WELDS
BROWNS FERRY NUCLEAR PLANT
Information Only

TYPICAL OF:
HEAD SPRAY
UNITS 1, 2, 3
HEAD INSTRUMENTATION
UNITS 1, 2, 3

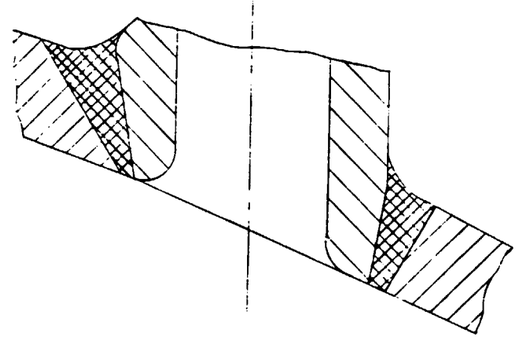

Information Only

TENNESSEE VALLEY AUTHORITY

NOZZLE TO VESSEL WELDS
BROWNS FERRY NUCLEAR PLANT

SCALE: 3" = 1'-0" SUBMITTED APPROVED DATE 2-2-67
DRAWN KHD TRACED CHECKED SHEET 6 OF 7 SHEETS
CHM-1094A

TVA 6690-A (PP-7-60)

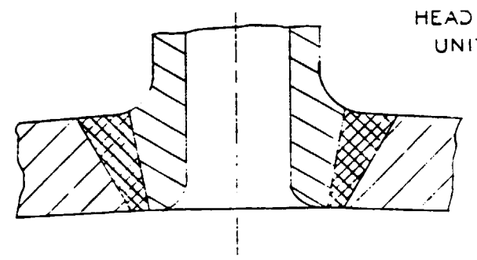

Information Only

TENNESSEE VALLEY AUTHORITY

NOZZLE TO VESSEL WELDS
BROWNS FERRY NUCLEAR PLANT

SCALE: 3"=1'0" SUBMITTED APPROVED DATE
DRAWN R.H.D.
TRACED
CHECKED
SHEET 7 OF 7 SHEETS
CH-1094A

TVA 6690-A (PP-7-60)

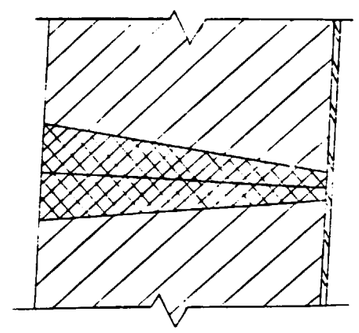

TYPICAL OF:
VESSEL LONGITUDINAL AND
CIRCUMFERENTIAL WELDS
UNITS 1,2,3

Information Only

TENNESSEE VALLEY AUTHORITY

VESSEL AND HEAD WELDS
BROWNS FERRY NUCLEAR PLANT

SCALE: 6" = 1'-0" SUBMITTED RJD APPROVED DATE 3-5-71
DRAWN RJD
TRACED
CHECKED
SHEET 1 of 5 SHEETS
CHANGES
RD

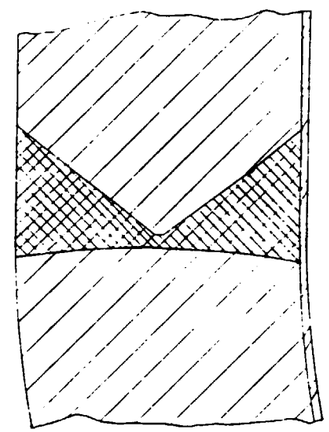

COURSE 1 TO LOWER HEAD
UNIT 1

Information Only

TENNESSEE VALLEY AUTHORITY

VESSEL AND HEAD WELDS
BROWNS FERRY NUCLEAR PLANT

SCALE 6" = 1'0"	SUBMITTED	APPROVED	DATE 3-5-71
DRAWN BHD		EDC	SHEET 2 OF 5 SHEETS
TRACE			CHM-10 OF 3
CHECKED			

RO

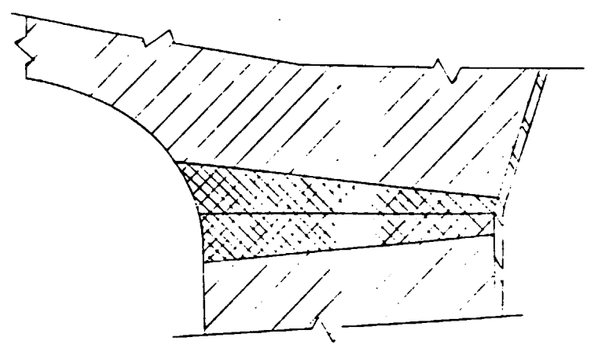

TYPICAL OF:
VESSEL TO FLANGE
UNITS 1,2,3

Information Only

TENNESSEE VALLEY AUTHORITY

VESSEL AND HEAD WELDS
BROWNS FERRY NUCLEAR PLANT

SCALE		APPROVED	DATE 3-5-71
DRAWN			SHEET 3 OF 5 SHEETS
TRACED			
CHECKED			CHVHC95A

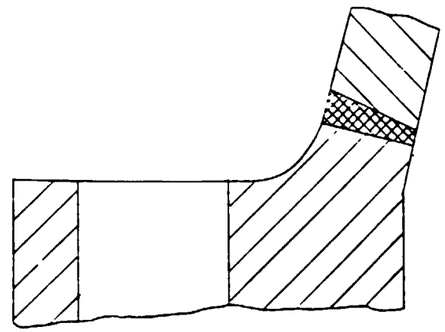

TYPICAL OF:
HEAD TO FLANGE
UNITS 1,2,3

Information Only

TENNESSEE VALLEY AUTHORITY

VESSEL AND HEAD WELDS
BROWNS FERRY NUCLEAR PLANT

SCALE 3" = 1'0"	SUBMITTED	APPROVED	DATE 3-5-7
DRAWN RHC			SHEET 4 OF 5 SHEETS
TRACED			CHVHC95A
CHECKED			

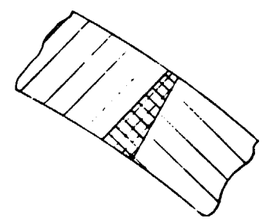

TYPICAL OF:
HEAD DOME WELDS
UNITS 1,2,3

Information Only

TENNESSEE VALLEY AUTHORITY

VESSEL AND HEAD WELDS
BROWNS FERRY NUCLEAR PLANT

SCALE 3" = 1'0"	SUBMITTED	APPROVED	DATE 3-5-71
DRAWN			SHEET 5 of 5 SHEETS
TRACED			C-1/-1095A
CHECKED			

NOZZLE GROUP	DISTANCE TO MATING SURFACE
N3X	86.5"
N12X	146"
N11X	228"
N4X	246.5"
N5X	259.5"
N9	296.5"
N16X	379"
N2X	564"
N1X	583.5"
N8X	610"

REFERENCE DRAWINGS (GE)
SKETCHES - RPV EXAMINATION PLAN (GE)
SK-B2001 SK-B2005 SK-B2010
SK-B2003 SK-B2007
SK-B2004 SK-B2006

LEGEND
O VESSEL NOZZLE
FULL PENETRATION NOZZLE WELD

ASME CC-1 (EQUIVALENT)

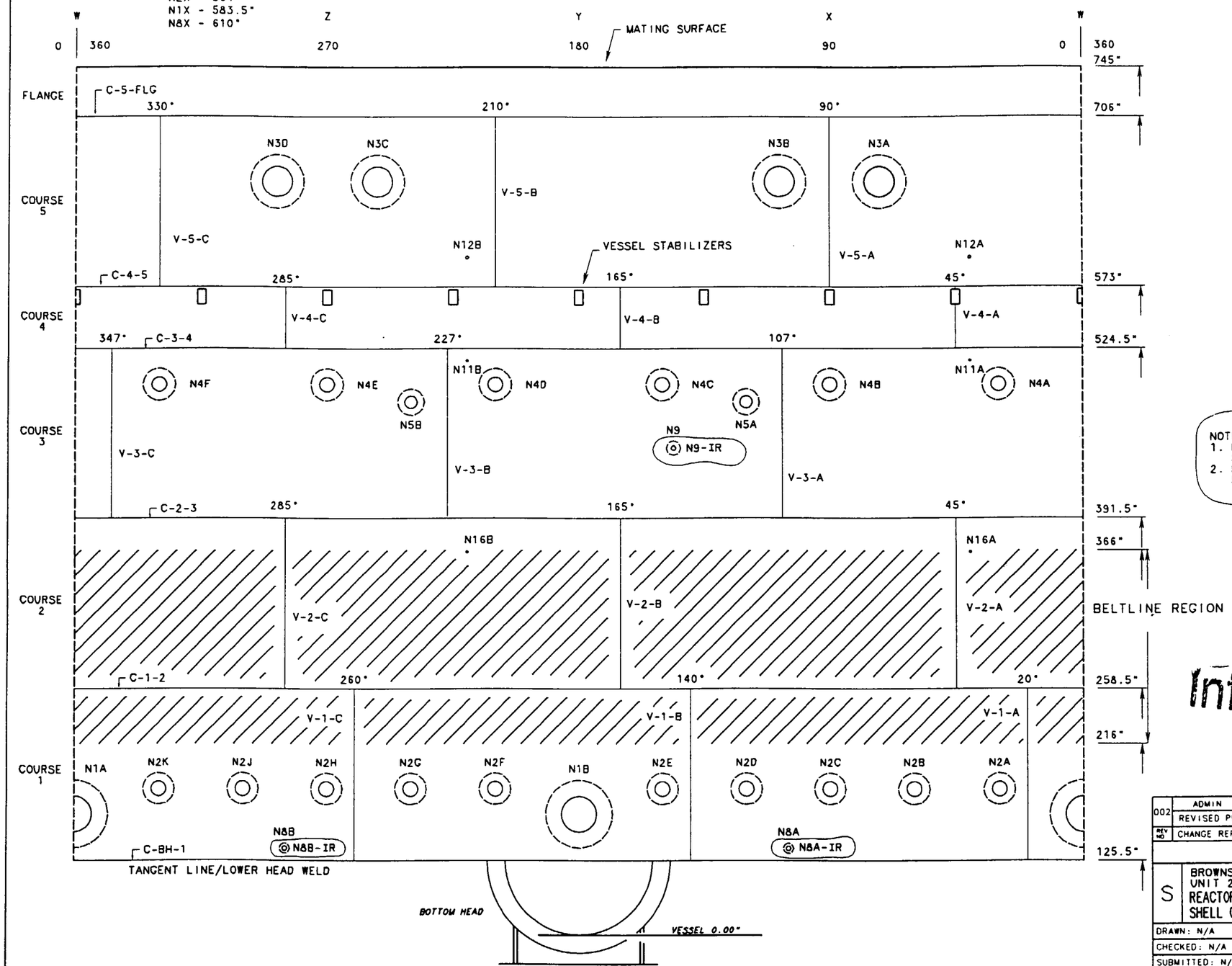

NOTES:
1. REFER TO RPV MANUAL FOR MATERIAL SPECIFICATION AND MATERIAL THICKNESS.
2. NOZZLES N-11A, N-11B, N-12A, N-12B, N-16A, AND N-16B ARE CATEGORY B-E.

Information Only

REV NO	CHANGE REF	DATE	DFTR	CHKR	DSGN	RVWR	1APPD	2APPD	3APPD	ISSD
002	ADMIN		RDL		N/A		N/A	N/A		
	REVISED PER RIMS MEMO R14 970505 302									

TENNESSEE VALLEY AUTHORITY

S

BROWNS FERRY NUCLEAR PLANT
UNIT 2
REACTOR PRESSURE VESSEL (RPV)
SHELL COURSE WELD/NOZZLE LOCATIONS (OUTSIDE VIEW)

DRAWN: N/A	DATE: N/A	SCALE: NTS	CADAM/ISICMP
CHECKED: N/A	APPROVED: GLB	SHEET 01 OF 02	REV
SUBMITTED: N/A		2-CHM-2046-C	002

CCD

CADAM

ALL A/D HISTORY RESEARCHED AT R000

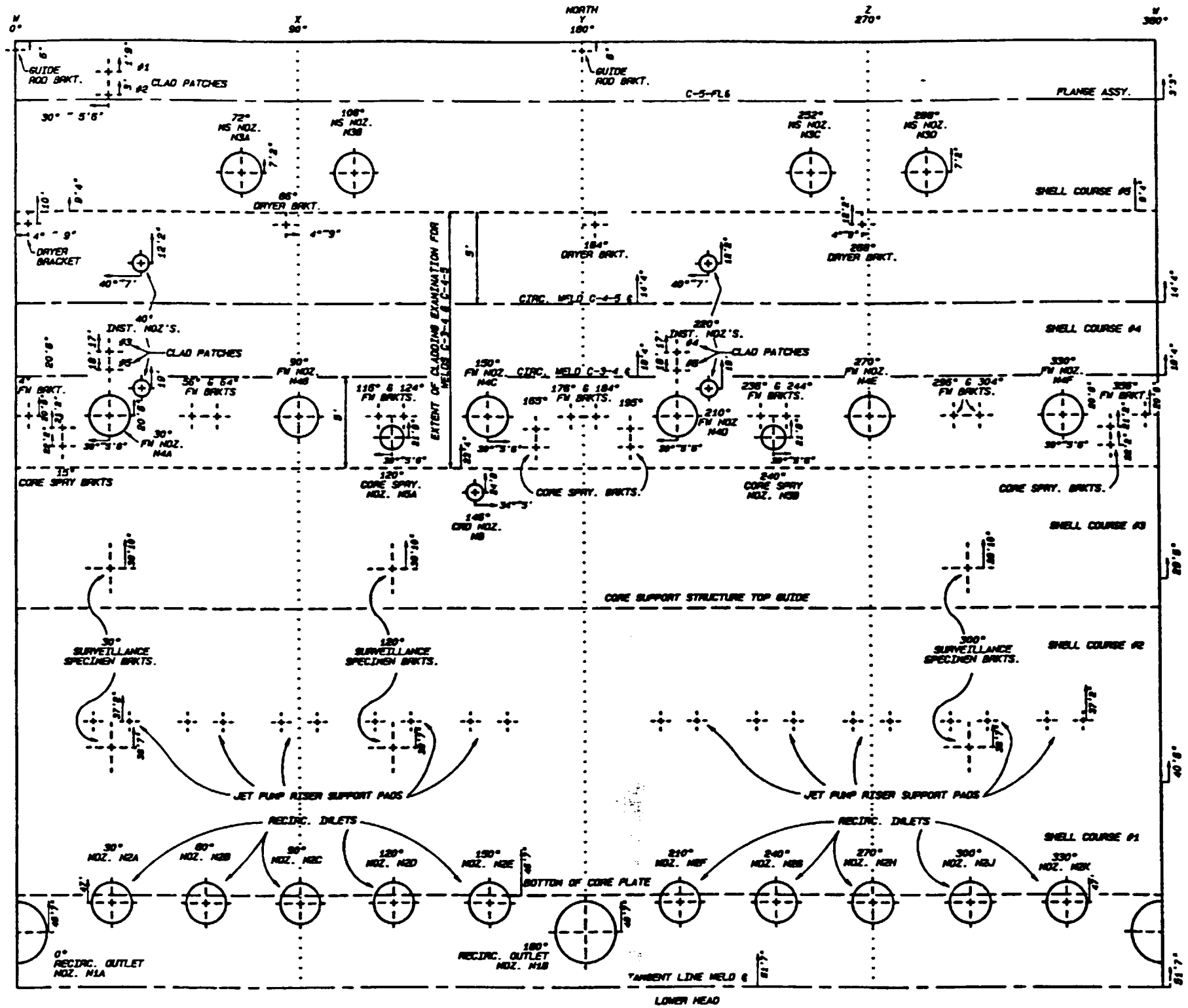

REFERENCE DRAWINGS

500733-001C (MIRROR INSULATION)
24187-F (B&W)
122856E

NOTES:

1. FOUR (4) STEAM DRYER HOLDDOWN BRACKETS (NOT SHOWN) ARE LOCATED IN THE VESSEL CLOSURE HEAD 10" UP FROM THE FLANGE. THESE ARE AT AZIMUTH LOCATIONS 41°, 139°, 221°, AND 319°.
2. CODE CATEGORY B-N-1
   RPV INTERIOR
   CODE CATEGORY B-N-2
   RPV-INT ATT BLR ①
   RPV-INT ATT NBLR ②
   RPV-CORE SUPPORT
   ① INTEGRAL ATTACHMENT BELTLINE REGION
   ② INTEGRAL ATTACHMENT NON BELTLINE REGION

M7 R01

4149371484
BFNR DRAWINGS
CC 2 2-CHM-2046-C
000002
051397 000

Information Only

"ORIGINAL"

000	CCD ADMIN	5-13-97	RBL	JT	N/A	RLDH	N/A	N/A	RLD	RLDH
	ISSUED TO CREATE CCD SUPERSEDES AS-DESIGNED CHM-2046-C-2 R2 AND TO DEPICT AS CONSTRUCTED STATUS PER RIMS MEMO R14 970503 301; A/D R0-R1									
REV NO	CHANGE REF	DATE	DFTR	CHKR	DSGN	RVWR	1 APPD	2 APPD	3 APPD	ISSD

TENNESSEE VALLEY AUTHORITY

BROWNS FERRY NUCLEAR PLANT
UNIT 2
REACTOR VESSEL WELD AND NOZZLE LOCATIONS (INTERIOR WALL)

DRAWN: PHB DATE: 8-29-88	SUBMITTED DATE: 5-23-89	APPROVED DATE: 5-23-89	SCALE: NTS SHEET 02 OF 02 SHEET(S)
CHECKED: JES DATE: 5-23-89	EDC	GLB	DRAWING NO. 2-CHM-2046-C REV 000
			CCD

PCADAM

ALL A/D HISTORY RESEARCHED AT R000

MATERIAL SPECIFICATIONS
ASME CC-2 (EQUIVALENT)
24" O.D. X 0.375" NOM. WALL (SCH. 20), CS
20" O.D. X 0.375" NOM. WALL (SCH. 20), CS
16" O.D. X 0.375" NOM. WALL (SCH. 30), CS
14" O.D. X 0.375" NOM. WALL (SCH. 30), CS
8" O.D. X 0.322" NOM. WALL (SCH. 40), CS

REFERENCE DRAWINGS
47W452 SERIES
47W335-4

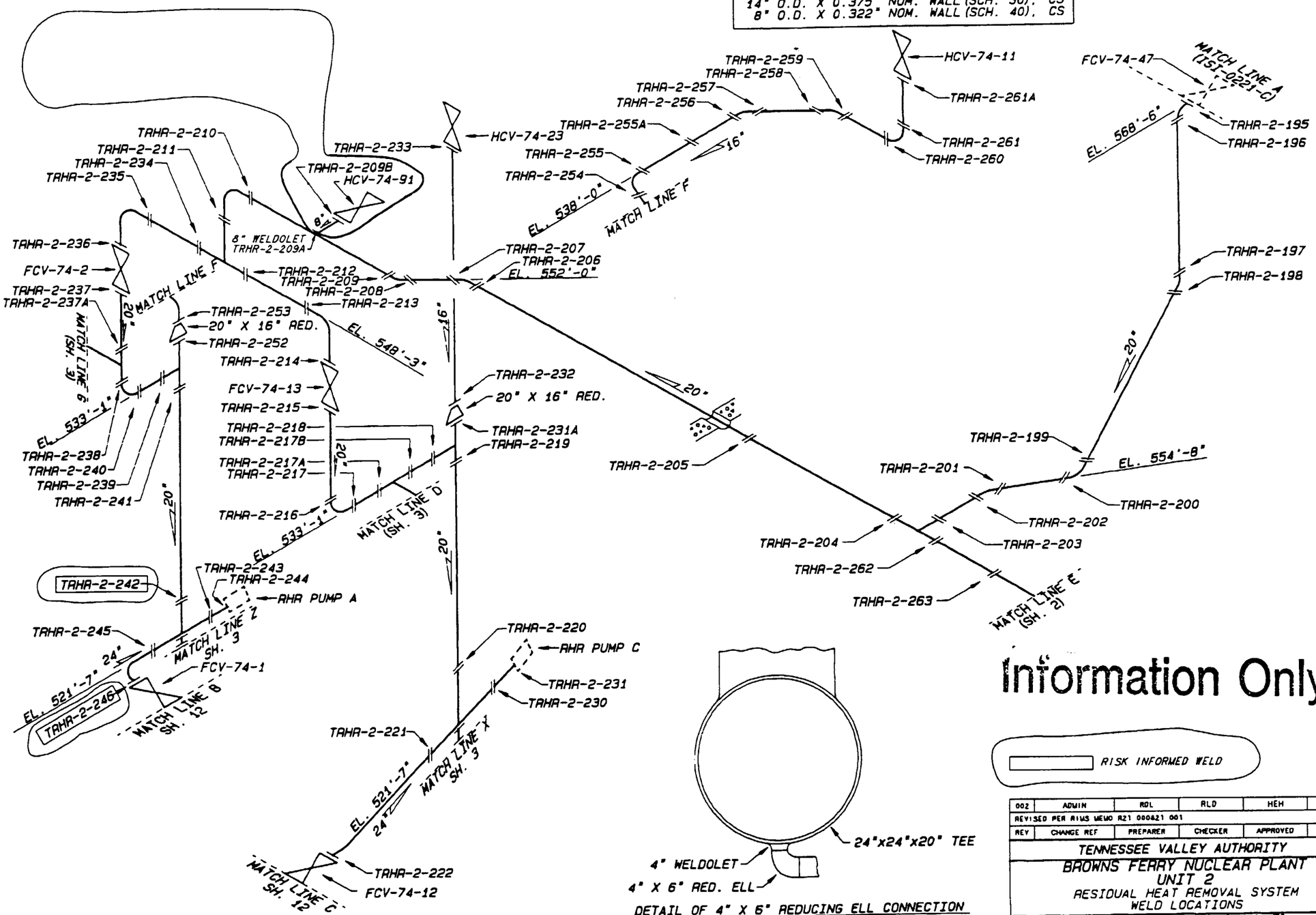

Information Only

RISK INFORMED WELD

DETAIL OF 4" X 6" REDUCING ELL CONNECTION

REV	CHANGE REF	PREPARER	CHECKER	APPROVED	DATE
002	ADMIN	RDL	RLD	HEH	
REVISED PER RIMS MEMO RZ1 000421 001					

TENNESSEE VALLEY AUTHORITY
BROWNS FERRY NUCLEAR PLANT
UNIT 2
RESIDUAL HEAT REMOVAL SYSTEM
WELD LOCATIONS

DRAWN: KEV	SUBMITTED	APPROVED	SCALE: NTS
DATE: 3-31-81	DATE:	DATE:	SHEET 1 OF 12 SHEET(S)
CHECKED: JTL		GLB	DRAWING NO. 2-MSG-0018-C — REV 002
DATE:			

CCD

CAD MAINTAINED DRAWING

ALL A/D HISTORY RESEARCHED AT R000

REFERENCE DRAWINGS
47W452 SERIES
47W335-4

MATERIAL SPECIFICATIONS
ASME CC-2 (EQUIVALENT)
24" X .375" NOM. WALL (SCH. 20), CS
20" X .375" NOM. WALL (SCH. 20), CS
16" X .375" NOM. WALL (SCH. 30), CS
14" X .375" NOM. WALL (SCH. 30), CS

SYMBOL:
- RISK INFORMED WELD

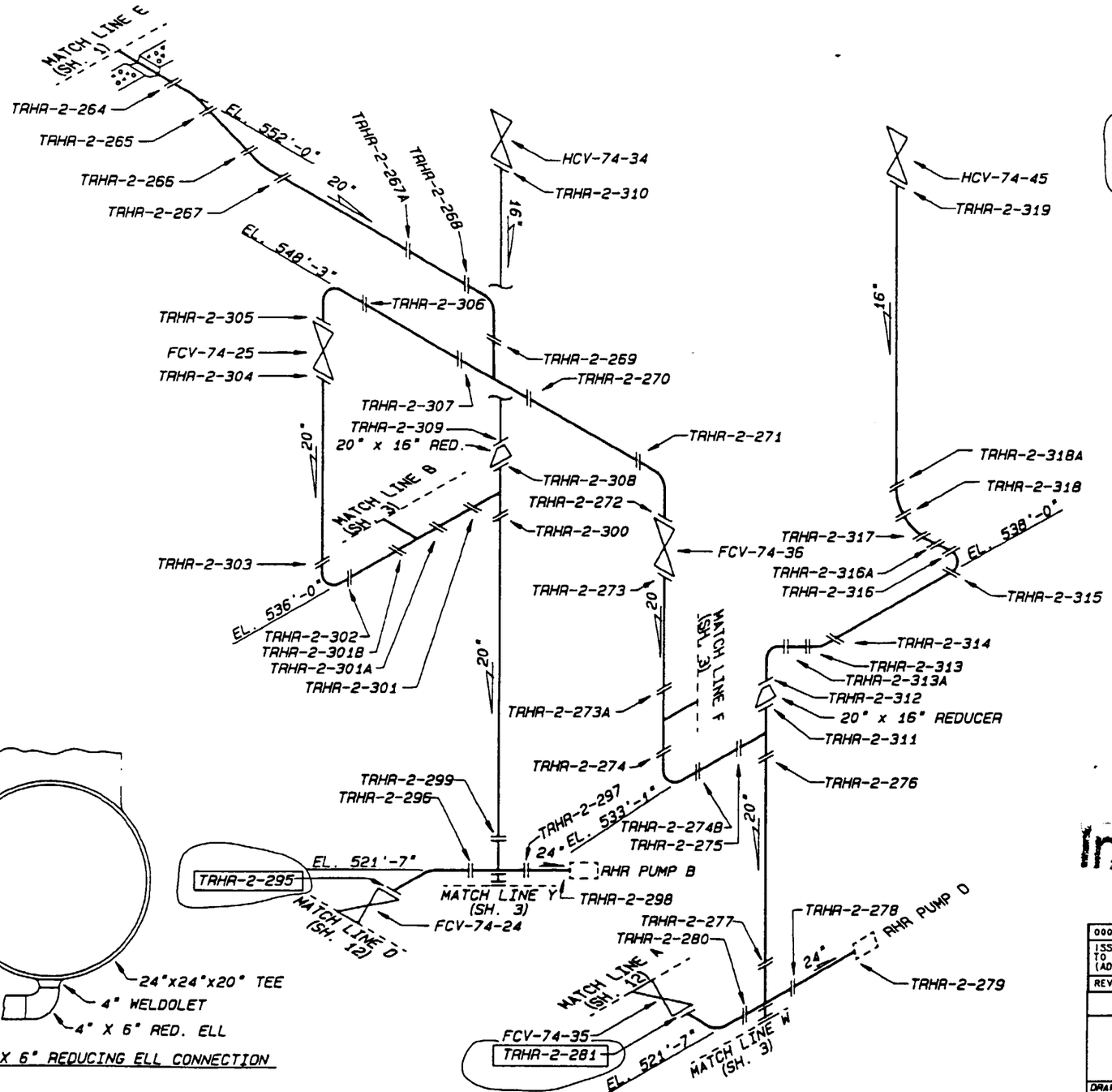

DETAIL OF 4" X 6" REDUCING ELL CONNECTION

Information Only

000	CCD/ADMIN	RGP	RLD	HEH	
ISSUED TO CREATE CCD. SUPERSEDES A/D WSG-0018-C-2 R004 AND TO DEPICT AS-CONSTRUCTED STATUS PER RIMS MEMO R21 000621 001 (ADMINISTRATIVE REVISION)					
REV	CHANGE REF	PREPARER	CHECKER	APPROVED	DATE

TENNESSEE VALLEY AUTHORITY

BROWNS FERRY NUCLEAR PLANT
UNIT 2
RESIDUAL HEAT REMOVAL SYSTEM
WELD LOCATIONS

DRAWN: KEV	SUBMITTED	APPROVED	SCALE: NTS
DATE: 4-1-81	DATE:	DATE:	SHEET 2 OF 12 SHEET(S)
CHECKED: EDC		GLB	DRAWING NO. 2-WSG-0018-C — REV 000
DATE:			

ALL A/D HISTORY RESEARCHED TO R000

CAD MAINTAINED DRAWING

CCD

REFERENCE DRAWINGS
47W452 SERIES
47W335-4

MATERIAL SPECIFICATIONS

14" x .375" NOM. WALL (SCH. 30) CS
6" x .280" NOM. WALL (SCH. 40) CS

ASME CC-2 (EQUIVALENT)

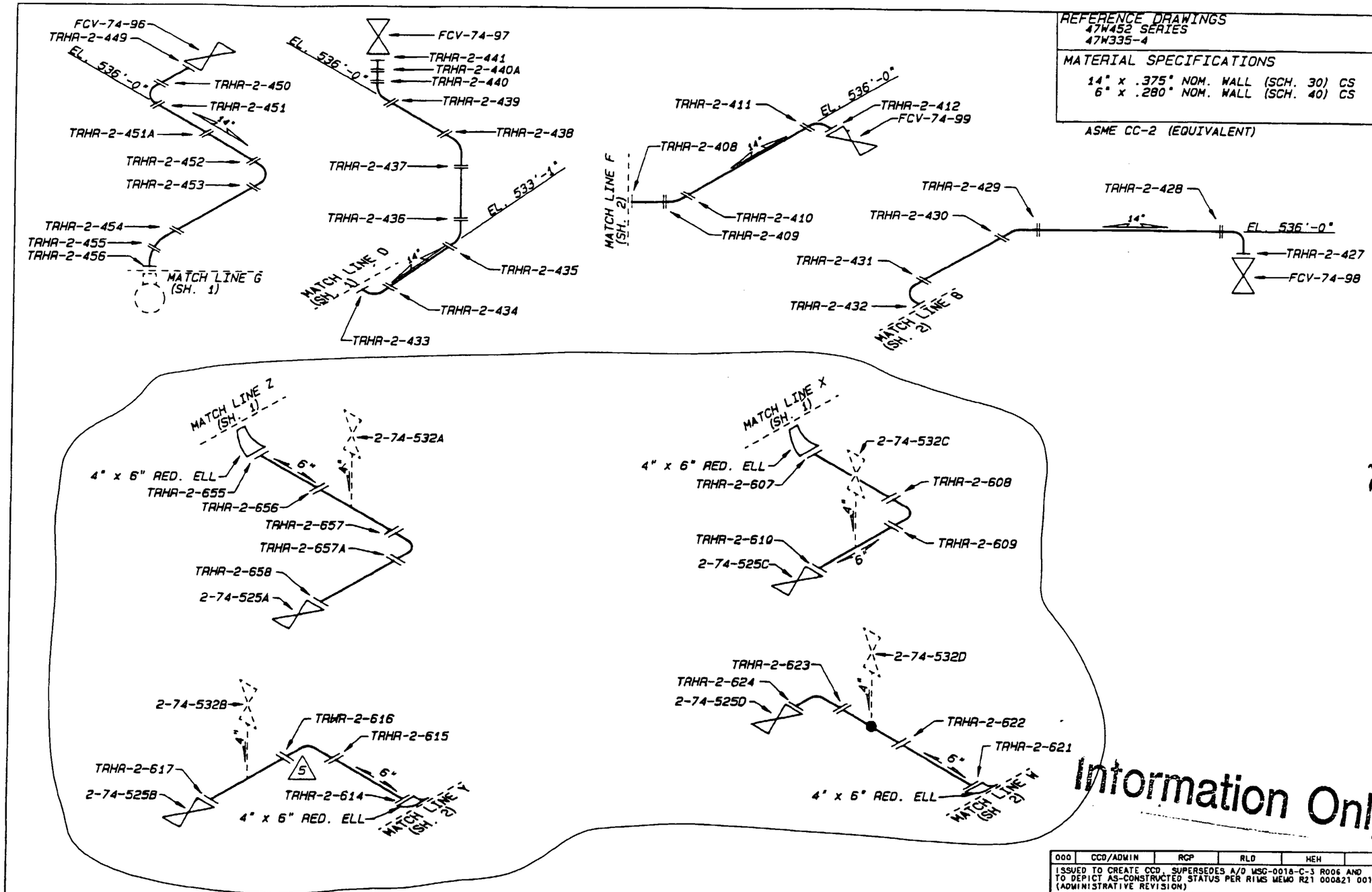

Information Only

REV	CHANGE REF	PREPARER	CHECKER	APPROVED	DATE
000	CCD/ADMIN	RGP	RLD	HEH	

ISSUED TO CREATE CCD, SUPERSEDES A/D MSG-0018-C-3 R006 AND TO DEPICT AS-CONSTRUCTED STATUS PER RIMS MEMO R21 000821 001 (ADMINISTRATIVE REVISION)

TENNESSEE VALLEY AUTHORITY

BROWNS FERRY NUCLEAR PLANT
UNIT 2
RESIDUAL HEAT REMOVAL SYSTEM
WELD LOCATIONS

DRAWN: KEV	SUBMITTED	APPROVED	SCALE: NTS
DATE: 4-1-81	DATE:	DATE:	SHEET 3 OF 12 SHEET(S)
CHECKED:			DRAWING NO. / REV
DATE:			2-MSG-0018-C / 000

ALL A/D HISTORY RESEARCHED TO R000

CAD MAINTAINED DRAWING

CCD

REFERENCE DRAWINGS
47W452 SERIES
47W335-7

MATERIAL SPECIFICATIONS
ASME CC-2 (EQUIVALENT)
20" x .500" NOM. WALL (SCH. 30). CS
18" x .500" NOM. WALL (XS). CS

3

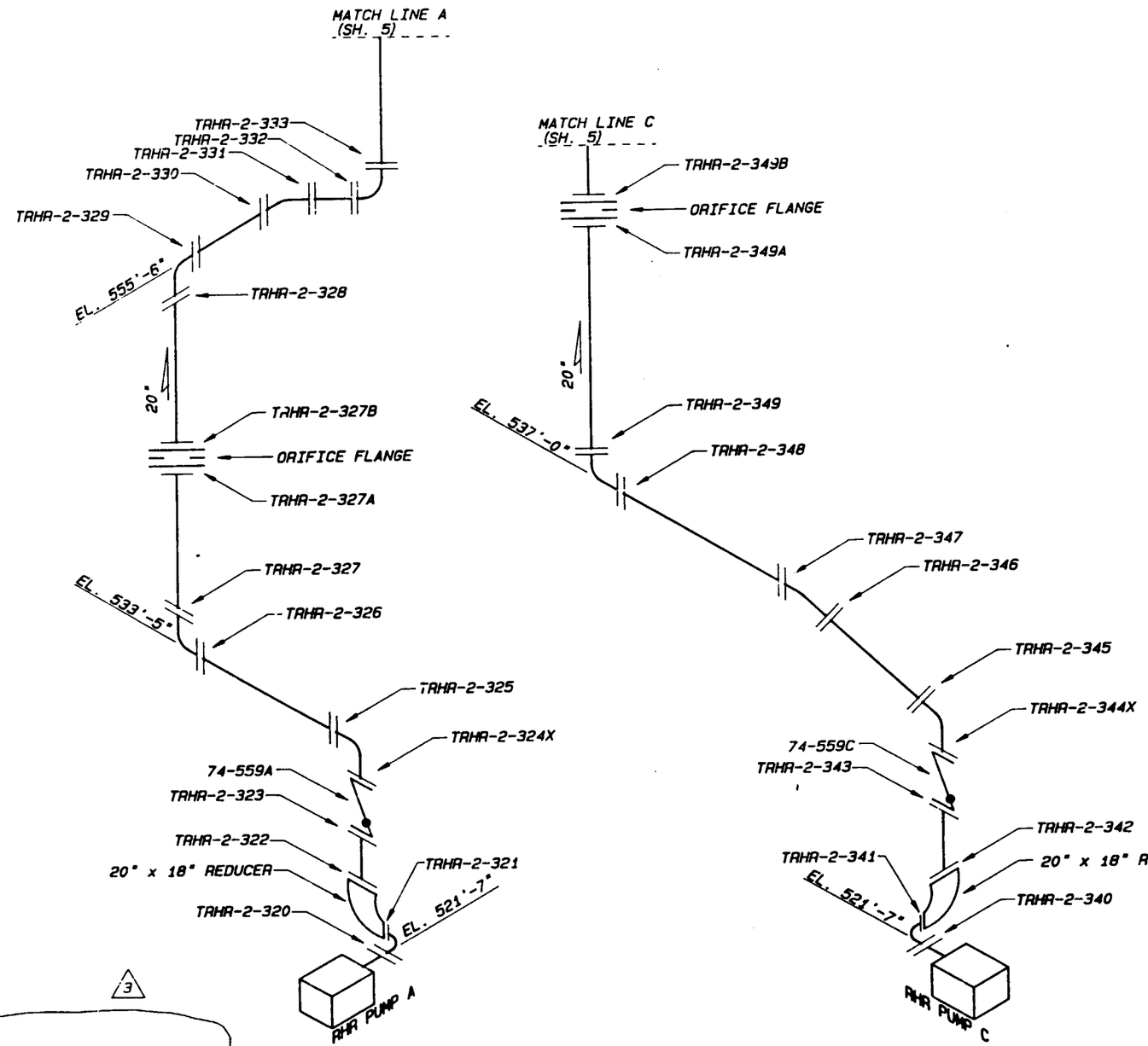

3

Information Only

REV.	BY	DATE	DESCRIPTION	CK'D	DS'GN	APP
03	PHB	4-26-91	DEL. CADBLK., REV. MATERIAL SPEC.			
02	PHB	10-19-88	REVISED MATERIAL SPEC.	JES	EDC	GLB
01	PHB	7-7-87	REVISED FOR PRISIM	JES	EDC	GLB

HARDWARE: TEK 4129 | SOFTWARE: TEKNICAD | 8" FLOPPY: BF-12

TENNESSEE VALLEY AUTHORITY

BROWNS FERRY NUCLEAR PLANT
UNIT 2
RESIDUAL HEAT REMOVAL SYSTEM
WELD LOCATIONS

DRAWN: KEV	SUBMITTED	APPROVED	SCALE: NTS
DATE: 4-21-81	DATE:	DATE:	SHEET 4 OF 12 SHEET(S)
CHECKED: EDC		GLB	DRAWING NO. MSG-0018-C REV 03
DATE:			

REFERENCE DRAWINGS
47W452 SERIES
47W335-7

MATERIAL SPECIFICATIONS
ASME CC-2 (EQUIVALENT)
24" x .500" NOM. WALL (XS), CS
20" x .500" NOM. WALL (SCH. 30), CS
10" x .365" NOM. WALL (SCH. 40), CS

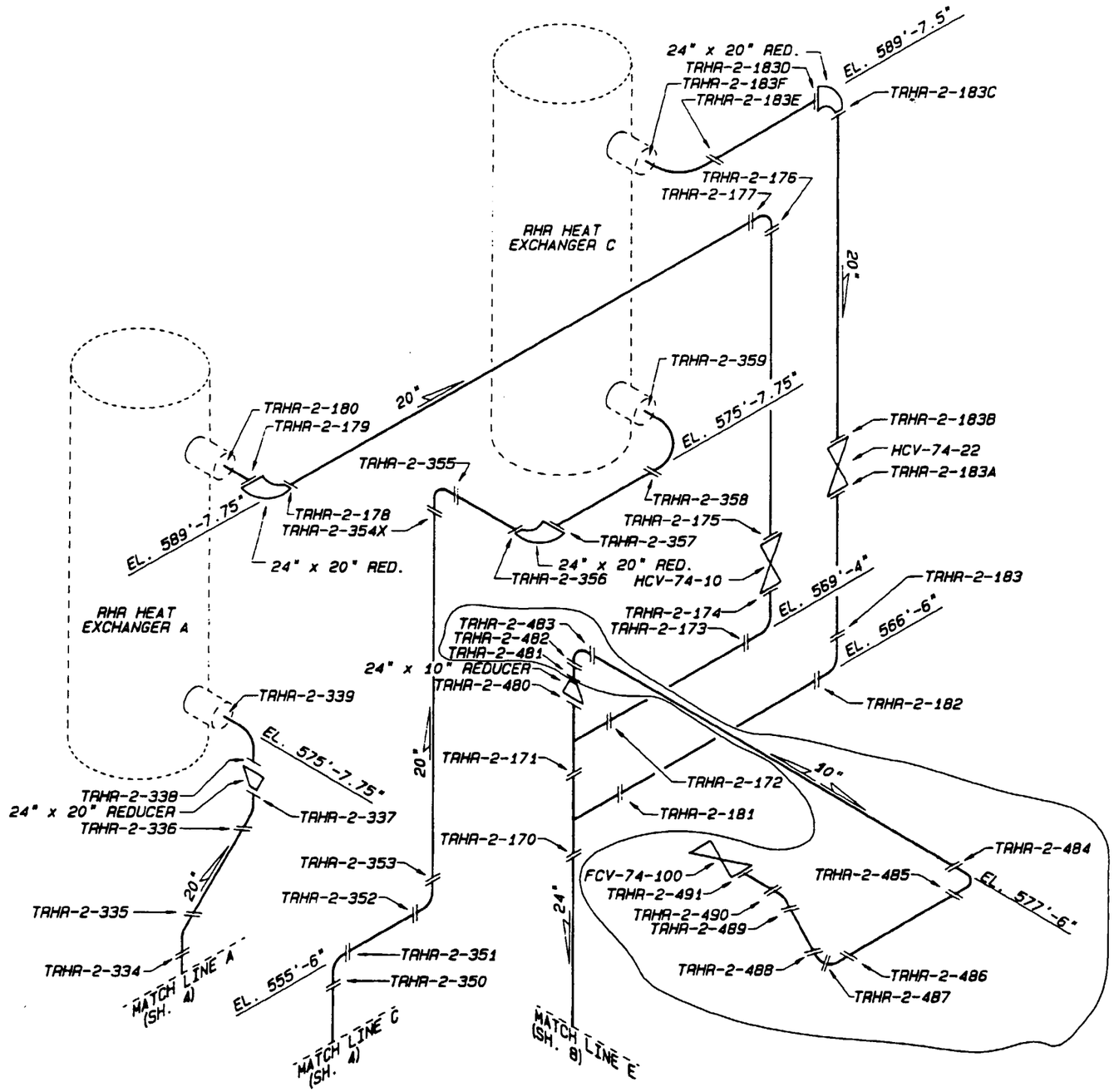

Information Only

REV	CHANGE REF	PREPARER	CHECKER	APPROVED	DATE
000	CCD/ADMIN	RGP	RLD	HEH	

ISSUED TO CREATE CCD, SUPERSEDES A/D MSG-0018-C-5 R006 AND TO DEPICT AS-CONSTRUCTED STATUS PER RIMS MEMO R21 000621 001 (ADMINISTRATIVE REVISION)

TENNESSEE VALLEY AUTHORITY

BROWNS FERRY NUCLEAR PLANT
UNIT 2
RESIDUAL HEAT REMOVAL SYSTEM
WELD LOCATIONS

DRAWN: KEV	SUBMITTED	APPROVED	SCALE: NTS
DATE: 4-2-81	DATE:	DATE:	SHEET 5 OF 12 SHEET(S)
CHECKED: JES	EDC	GLB	DRAWING NO. / REV
DATE:			2-MSG-0018-C / 000

ALL A/D HISTORY RESEARCHED TO R000

CAD MAINTAINED DRAWING

CCD

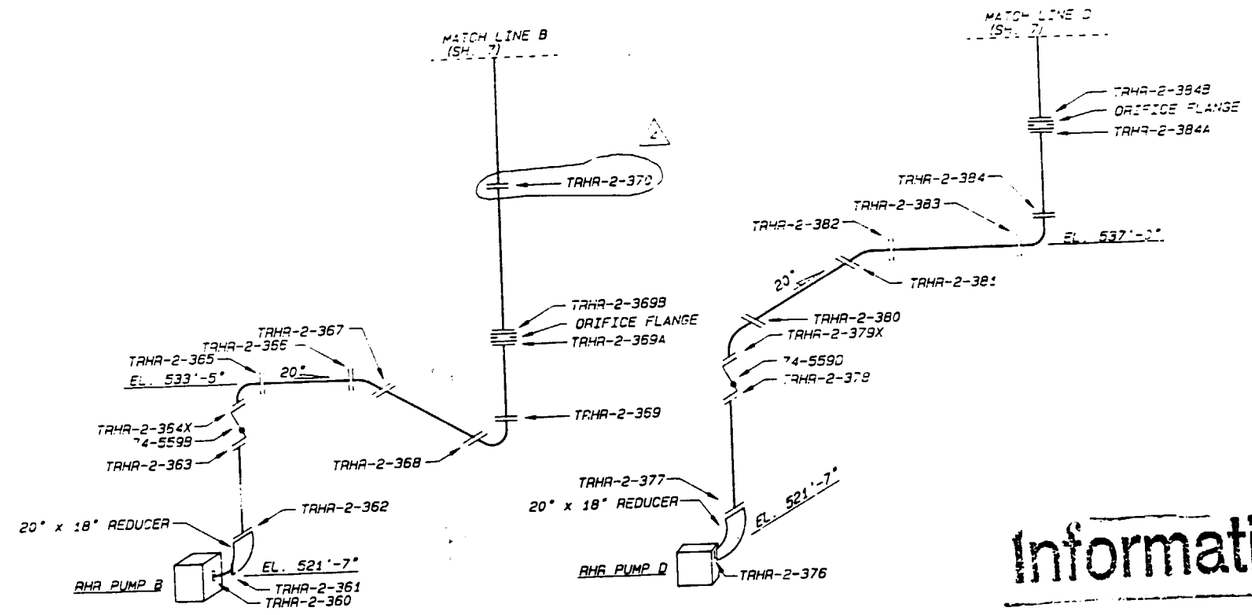

Information Only

04	PHB	ADD PIPE TO PIPE WELD TRHR-2-370	
03	PHB 4-26-91	DEL. CADBLK. REV. MATERIAL SPEC	JAA JES GLB
02	PHB 10-19-88	REVISED MATERIAL SPECIFICATIONS	JES EDC GLB
01	PHB 7-9-87	REDRAWN AND REVISED FOR PRISM	JES EDC GLB
RE	BY	DATE	DESCRIPTION	CK'D SUB APP

HARDWARE: TEK 4129 SOFTWARE: TEKNICAD 8" FLOPPY: BF-12

TENNESSEE VALLEY AUTHORITY

BROWNS FERRY NUCLEAR PLANT
UNIT 2
RESIDUAL HEAT REMOVAL SYSTEM
WELD LOCATIONS

DRAWN: KE	SUBMITTED	APPROVED	SCALE: NTS
DATE: 4-2-81	DATE	DATE	SHEET 6 OF 12 SHEET(S)
CHECKED: EDC		GLB	DRAWING NO. MSG-0018-C REV 04
DATE			

REFERENCE DRAWINGS
47W452 SERIES
47W335-7

MATERIAL SPECIFICATIONS
ASME CC-2 (EQUIVALENT)
24" x .500" NOM. WALL (XS), CS
20" x .500" NOM. WALL (SCH. 30), CS
10" x .365" NOM. WALL (SCH. 40), CS

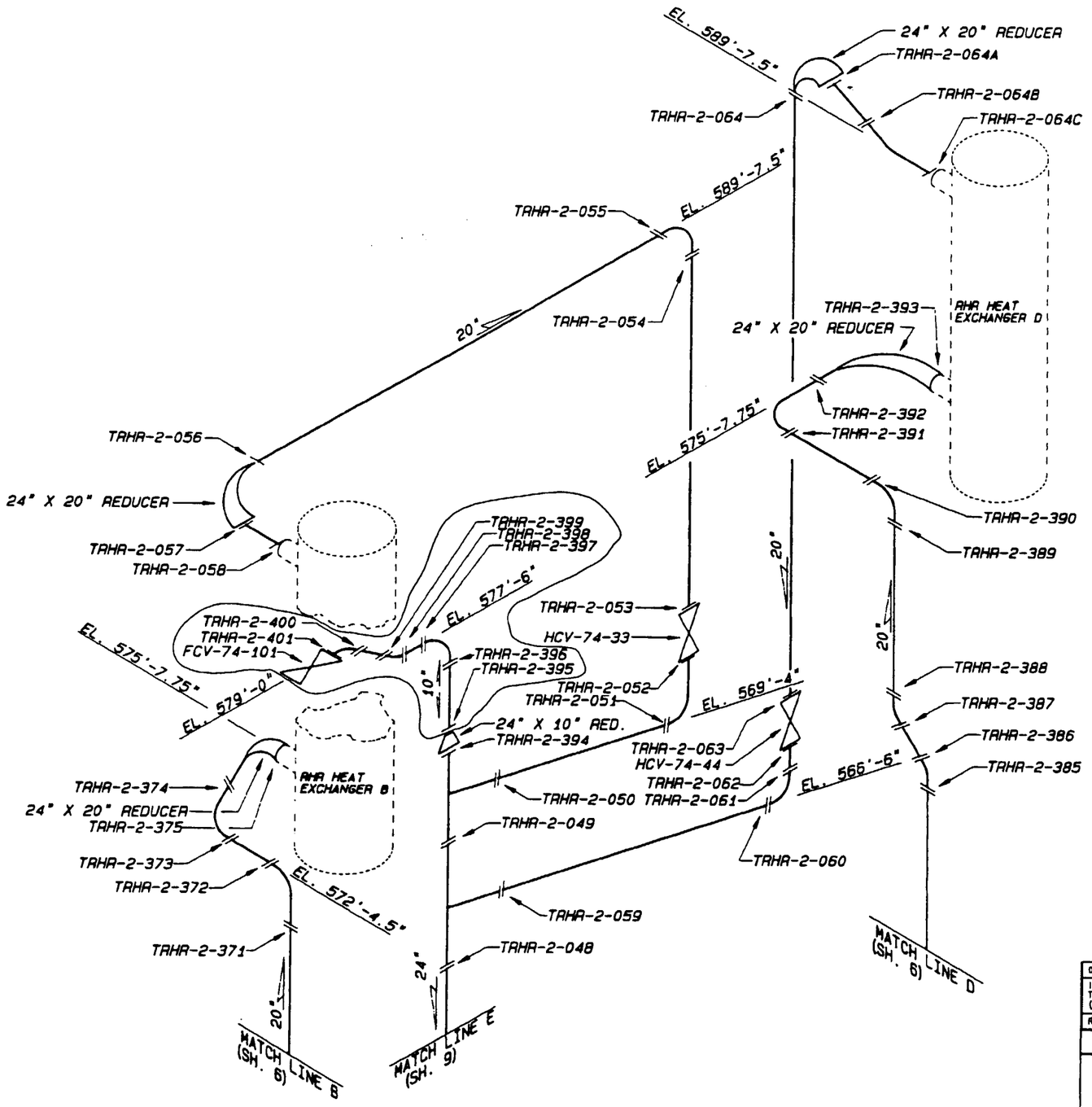

Information Only

REV	CHANGE REF	PREPARER	CHECKER	APPROVED	DATE
000	CCD/ADMIN	RGP	RLD	HEH	

ISSUED TO CREATE CCD, SUPERSEDES A/D MSG-0018-C-7 R005 AND TO DEPICT AS-CONSTRUCTED STATUS PER RIMS MEMO R21 000621 001 (ADMINISTRATIVE REVISION)

TENNESSEE VALLEY AUTHORITY

BROWNS FERRY NUCLEAR PLANT
UNIT 2
RESIDUAL HEAT REMOVAL SYSTEM
WELD LOCATIONS

DRAWN: KEV	SUBMITTED	APPROVED	SCALE: NTS
DATE: 4-3-81	DATE:	DATE:	SHEET 7 OF 12 SHEET(S)
CHECKED: EDC		GLB	DRAWING NO. 2-MSG-0018-C — REV 000
DATE:			

ALL A/D HISTORY RESEARCHED TO R000

CAD MAINTAINED DRAWING

CCD

REFERENCE DRAWINGS
47W452 SERIES
47W335-6

MATERIAL SPECIFICATIONS

6" X 0.280" NOM. WALL (SCH. 40) CS
18" X 0.500" NOM. WALL (XS) CS
24" X 0.500" NOM. WALL (XS) CS
24" X 1.531" NOM. WALL (SCH. 100) CS

ASME CC-2 (EQUIVALENT)

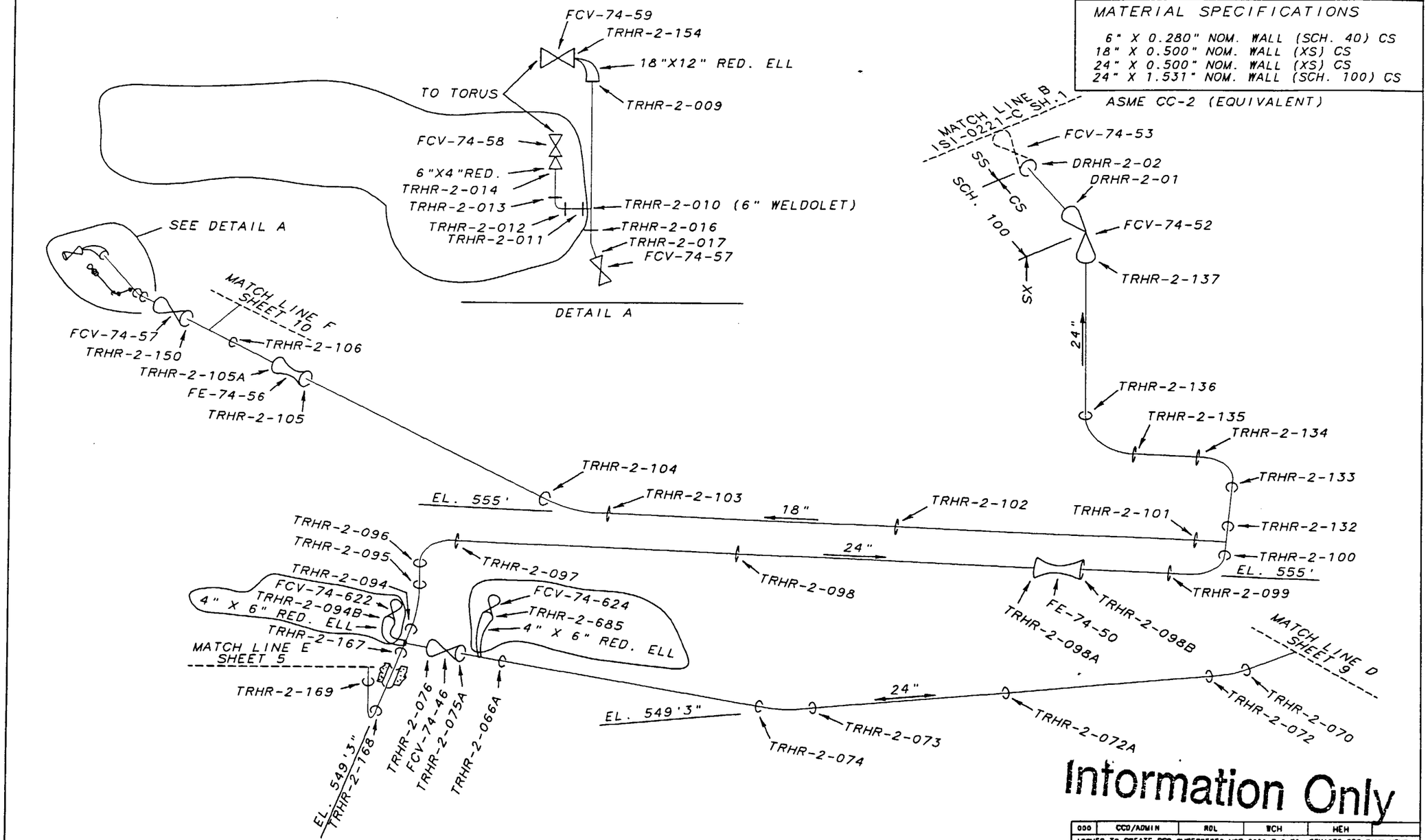

Information Only

000	CCD/ADMIN	RDL	WCH	HEH	
ISSUED TO CREATE CCD SUPERSEDES MSC-0018-C-8 R9; REVISED PER RIMS MEMO RZ1 000821 001					
REV	CHANGE REF	PREPARER	CHECKER	APPROVED	DATE

TENNESSEE VALLEY AUTHORITY

BROWNS FERRY NUCLEAR PLANT
UNIT 2
RESIDUAL HEAT REMOVAL SYSTEM
WELD LOCATIONS

DRAWN: KEV	DATE: 4-15-81	SCALE: NTS	CADAM/ISICMP
CHECKED: EDC	APPROVED: GLB	SHEET 08 OF 12	REV
SUBMITTED:		2-MSG-0018-C	000

CCD

ALL A/D HISTORY RESEARCHED • R000

CAD MAINTAINED DRAWING

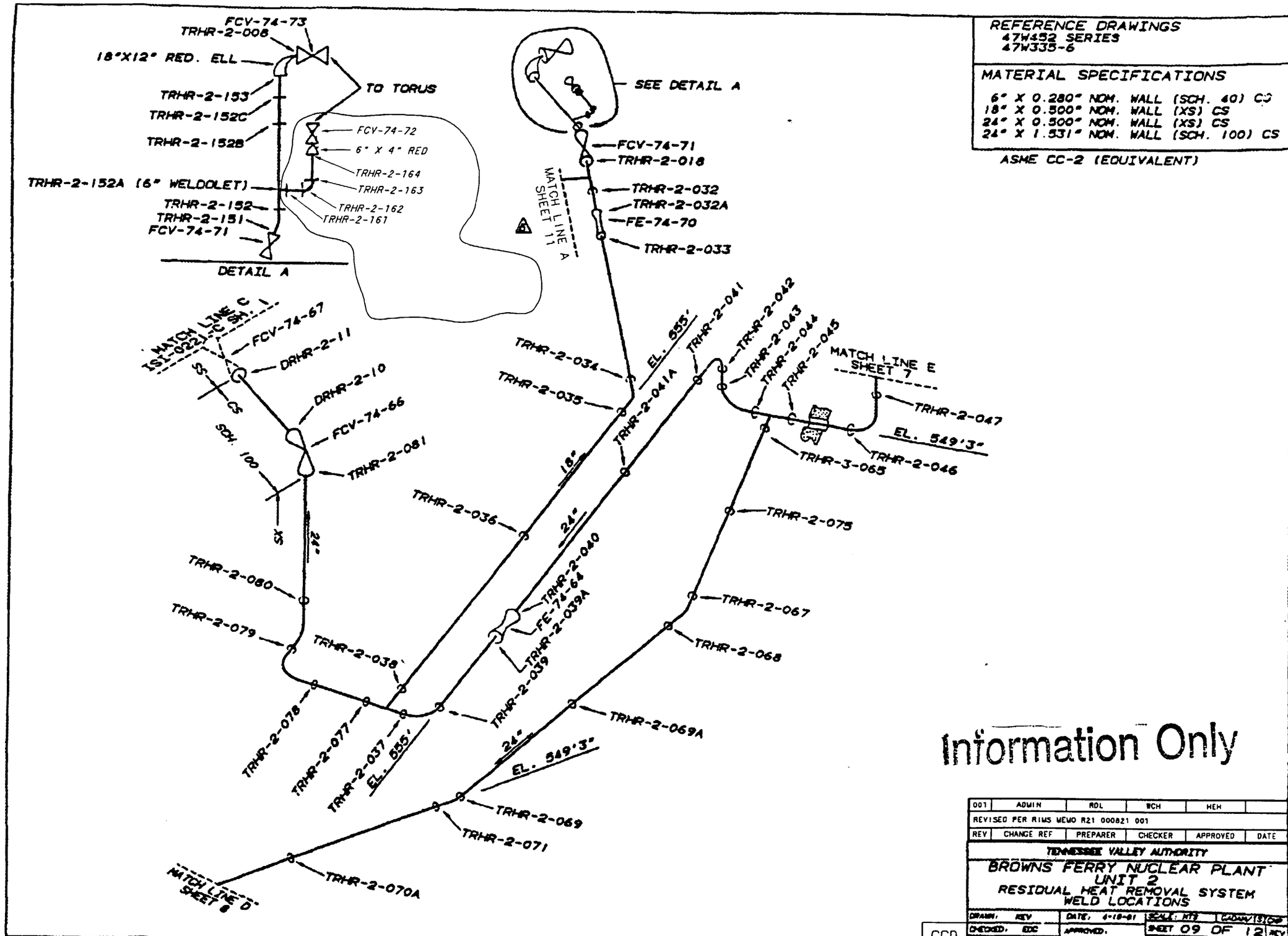

REFERENCE DRAWINGS
47W452 SERIES
47W335-6

MATERIAL SPECIFICATIONS

6" X 0.280" NOM. WALL (SCH. 40) CS
18" X 0.500" NOM. WALL (XS) CS
24" X 0.500" NOM. WALL (XS) CS
24" X 1.531" NOM. WALL (SCH. 100) CS

ASME CC-2 (EQUIVALENT)

Information Only

001	ADMIN	RDL	WCH	HEH	
REVISED PER RIMS MEMO R21 000821 001					
REV	CHANGE REF	PREPARER	CHECKER	APPROVED	DATE

TENNESSEE VALLEY AUTHORITY

BROWNS FERRY NUCLEAR PLANT
UNIT 2
RESIDUAL HEAT REMOVAL SYSTEM
WELD LOCATIONS

DRAWN: KEV | DATE: 4-18-81 | SCALE: NTS | CADAM/IS/CHP
CHECKED: EDC | APPROVED: GLB | SHEET 09 OF 12 | REV
SUBMITTED: | 2-MSG-0018-C | 001

CCD

ALL A/D HISTORY RESEARCHED AT R000

CAD MAINTAINED DRAWING

REFERENCE DRAWINGS
47W452 SERIES
47W335-8

MATERIAL SPECIFICATIONS

6" X .280" NOM. WALL (SCH. 40) CS
8" X .322" NOM. WALL (SCH. 40) CS
12" X 0.375" NOM. WALL (STD) CS
18" X 0.500" NOM. WALL (XS) CS

ASME CC-2 (EQUIVALENT)

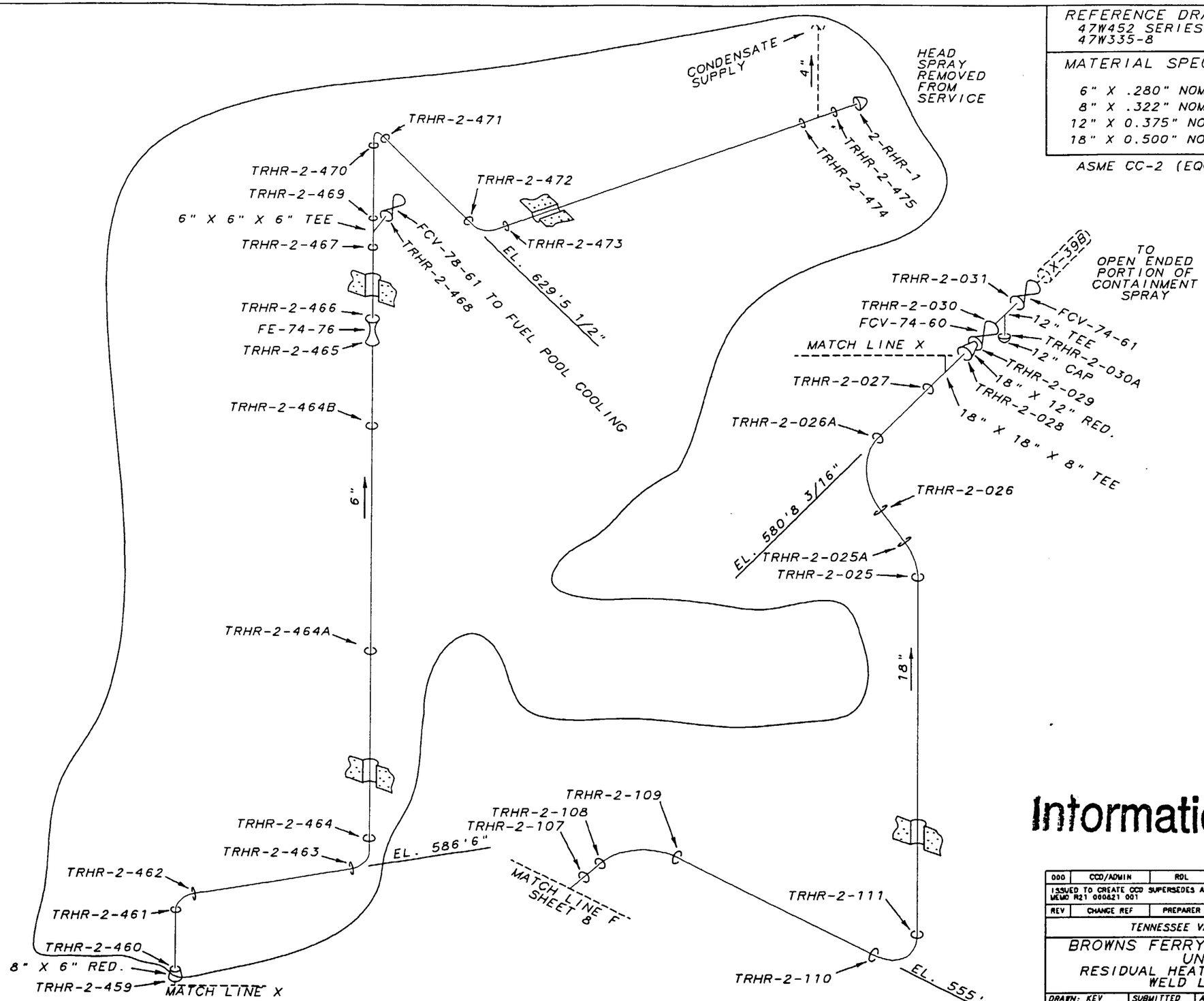

Information Only

000	CCD/ADMIN	RDL	WCH	HEH	
ISSUED TO CREATE CCD SUPERSEDES A/D MSG-0018-C-10 R6; REVISED PER RIMS MEMO R21 000621 001					
REV	CHANGE REF	PREPARER	CHECKER	APPROVED	DATE

TENNESSEE VALLEY AUTHORITY

BROWNS FERRY NUCLEAR PLANT
UNIT 2
RESIDUAL HEAT REMOVAL SYSTEM
WELD LOCATIONS

DRAWN: KEV	SUBMITTED	APPROVED	SCALE NTS
DATE: 4-17-81	DATE:	DATE:	SHEET 10 OF 12 SHEET(S)
CHECKED: JES	EDC	GLB	DRAWING NO. 2-MSG-0018-C / REV. 000
DATE:			

CCD

CAD MAINTAINED DRAWING

REFERENCE DRAWINGS
47W452 SERIES
47W335-6,8
47N1923-1

MATERIAL SPECIFICATIONS

12" X 0.375" NOM. WALL (XS) CS
18" X 0.500" NOM. WALL (STD) CS

ASME CC-2 (EQUIVALENT)

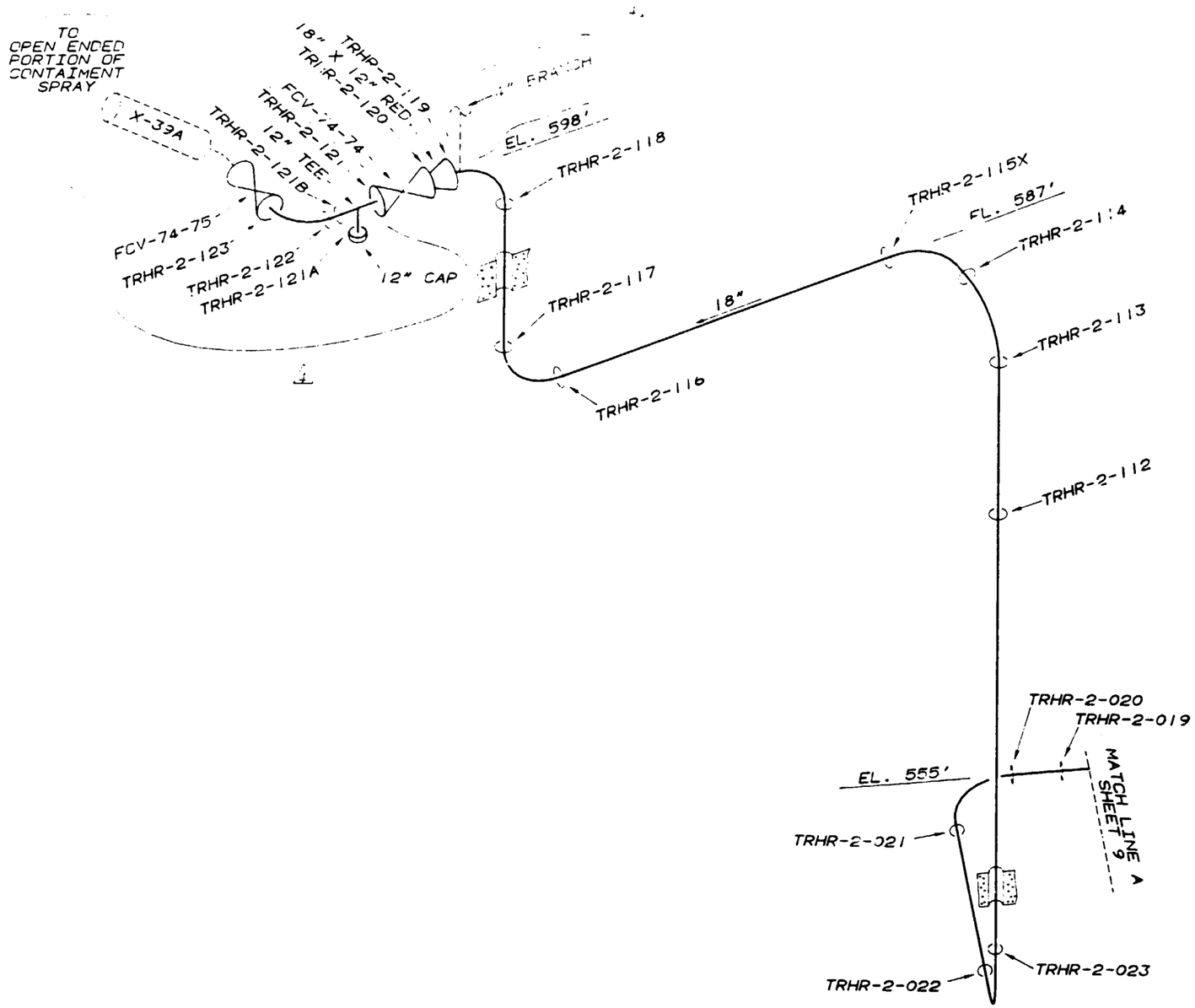

Information Only

REV.	BY	CHECKED	SUBMITTED	APPROVED	DATE
4	PHB				
ADD WELDS TRHR-2-121, -121A, -121B, -122, -123 ADD VALVE FCV-74-75 AND PEN. X-39A, MADE CADAM. ADD 4" BRANCH LOCATION					
3	PHB	JES	EDC	GLB	10-5-88
ADD CONTAINMENT SPRAY NOTE					
2	PHB	JES	EDC	GLB	7-15-87
REDRAWN AND REVISED FOR PRISIM					
1	JAA	JES	EDC	GLB	7-10-86
CORRECT WELD NO'S					

HARDWARE: IBM 5085 SOFTWARE: CADAM USER: ISICMP

TENNESSEE VALLEY AUTHORITY

BROWNS FERRY NUCLEAR PLANT
UNIT 2
RESIDUAL HEAT REMOVAL SYSTEM
WELD LOCATIONS

DRAWN: KEV	SUBMITTED	APPROVED	SCALE NTS
DATE: 4-15-81	DATE:	DATE	SHEET 11 OF 12 SHEET(S)
CHECKED: JES	EDC	GLB	DRAWING NO / REV
DATE:			MSG-0018-C 04

REFERENCE DRAWINGS:
47W452 SERIES
47W335-4

MATERIAL SPECIFICATIONS:

30" X .375" NOM. WALL (STD). CS
24" X .375" NOM. WALL (SCH. 20). CS
6" X .280" NOM. WALL (SCH. 40). CS

ASME CC-2 (EQUIVALENT)

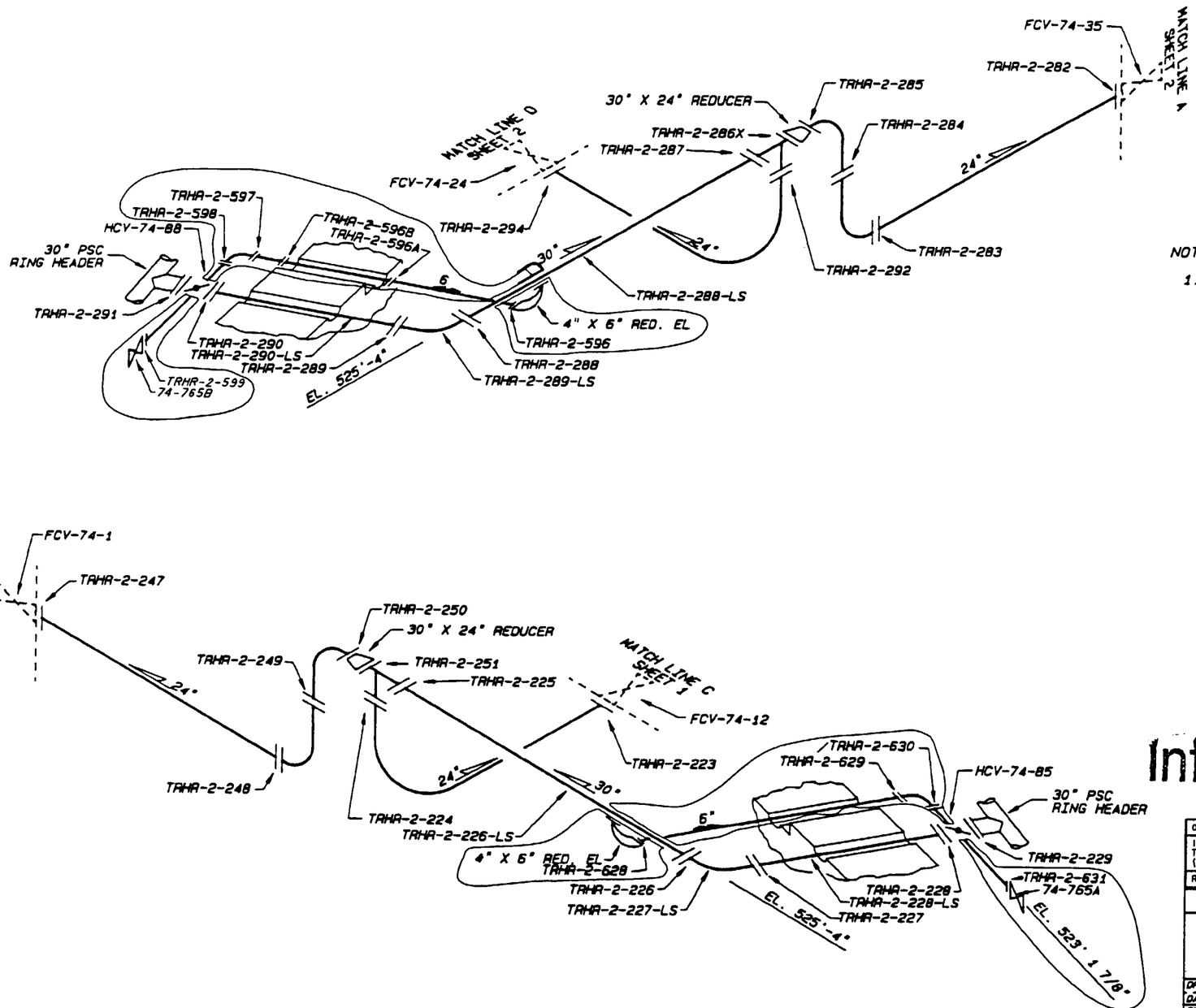

NOTE:

1. PIPE SEGMENT LONGITUDINAL SEAMS WILL BE IDENTIFIED AS:

(BASE WELD) -LS-D (DOWNSTREAM)
(BASE WELD) -LS-U (UPSTREAM)

Information Only

REV	CHANGE REF	PREPARER	CHECKER	APPROVED	DATE
000	CCD/ADMIN	RCP	WCH	HEH	

ISSUED TO CREATE CCD, SUPERSEDES A/D MSG-0018-C-12 R6 AND TO DEPICT AS-CONSTRUCTED STATUS PER RIMS MEMO R21 000821 001 (ADMINISTRATIVE REVISION)

TENNESSEE VALLEY AUTHORITY
BROWNS FERRY NUCLEAR PLANT
UNIT #2
RESIDUAL HEAT REMOVAL SYSTEM
WELD LOCATIONS

DRAWN: RPG	SUBMITTED	APPROVED	SCALE: NTS
DATE: 6-14-88	DATE: 6-14-88	DATE: 6-14-88	SHEET 12 OF 12 SHEET (S)
CHECKED: JES	EDC	GLB	DRAWING NO. 2-MSG-0018-C — REV 000
DATE: 6-14-88			

ALL A/D HISTORY RESEARCHED TO R000

CAD MAINTAINED DRAWING

CCD

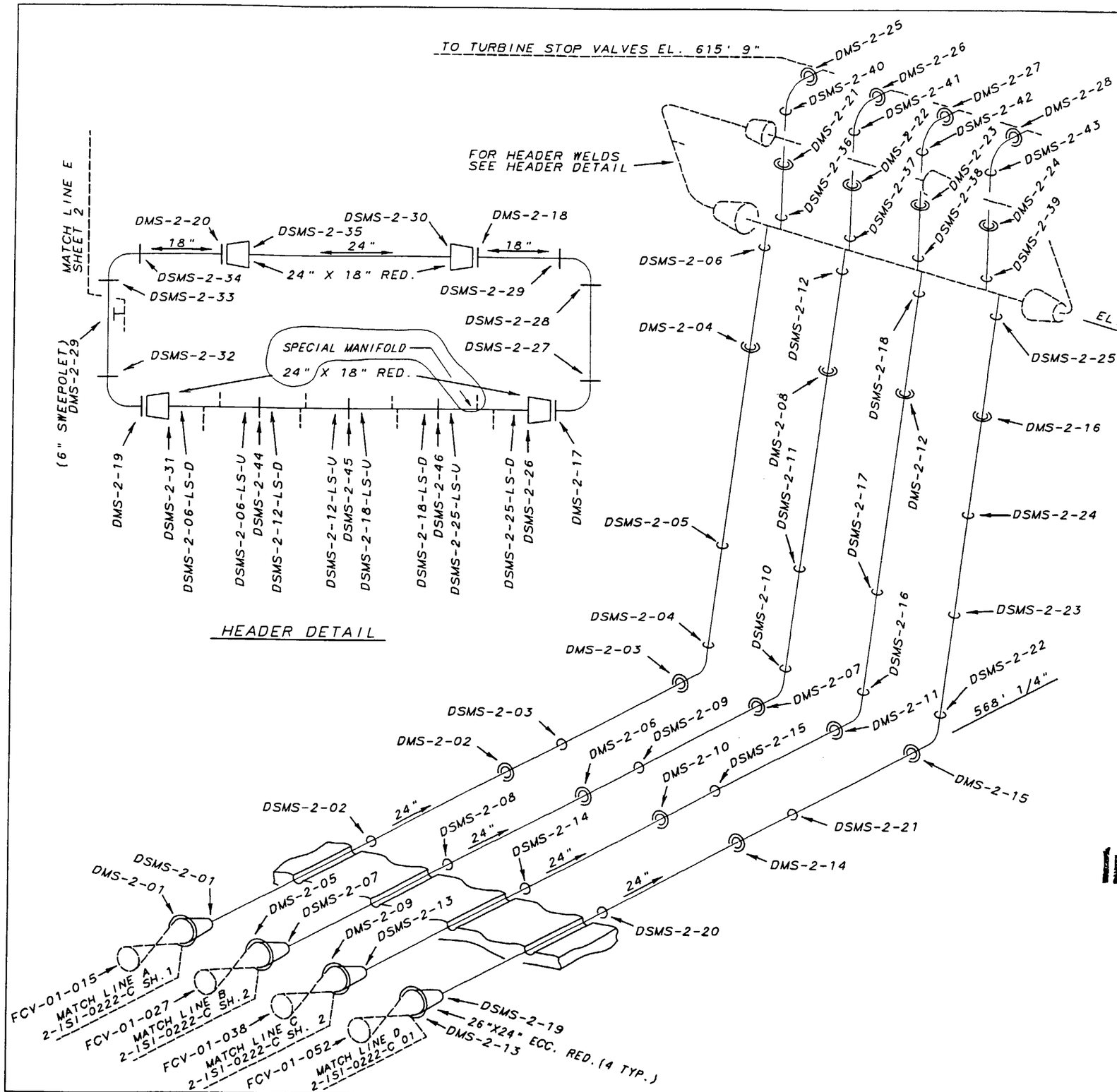

REFERENCE DRAWINGS
47W335-1
47W400 SERIES
3-47E801 SERIES
GE 945D695 (CONT. # 68-91062)
DRAVO E-2478 IC-1
DRAVO 950037-1
1SI-0079-C (SH. 1) SUPPORT MAP

MATERIAL SPECIFICATIONS:
A155KC70, A515-70 (SPECIAL MANIFOLD)
25.25" O.D. X 1.625" NOM WALL, CS

A-106-B
24" X 1.219" NOM. WALL THK. SCH. 80
24" X 2.5" NOM. WALL THK. CS
18" X 0.938" NOM WALL THK. SCH. 80

A-234 WPB
26" X 1.219" NOM. WALL THK. SCH. 80

ASME CC-2 (EQUIVALENT)

Information Only

REV NO	CHANGE REF	DATE	DFTR	CHKR	DSGN	RVWR	1 APPD	2 APPD	3 APPD	ISSD
000	CCD ADMIN		RDL		N/A		N/A	N/A		
	ISSUED TO CREATE CCD SUPERSEDES MSG-0021-C-1 R5 AND TO DEPICT AS CONSTRUCTED STATUS PER RIMS MEMO R14 970324 302; A/D R0-R4									

S TENNESSEE VALLEY AUTHORITY

BROWNS FERRY NUCLEAR PLANT
UNIT 2
MAIN STEAM SYSTEM
WELD LOCATIONS

DRAWN: KEV	SUBMITTED	APPROVED	SCALE NTS
DATE: 6-30-81	DATE:	DATE:	SHEET 01 OF 02 SHEET(S)
CHECKED: JTL		GLB	DRAWING NO. 2-MSG-0021-C REV. 000
DATE:			

CCD

PCADAM

ALL A/D HISTORY RESEARCHED AT R000

REFERENCE DRAWINGS
47W400 SH. 1 & 5
47W801 SERIES
DRAVO E-2458 IC-56
ISI-0079-C (SH. 2) SUPPORT MAP

MATERIAL SPECS.
ASME CC-2 (EQUIVALENT)
6" SCH. 80 A-106-B 0.432" NOM. WALL THK.

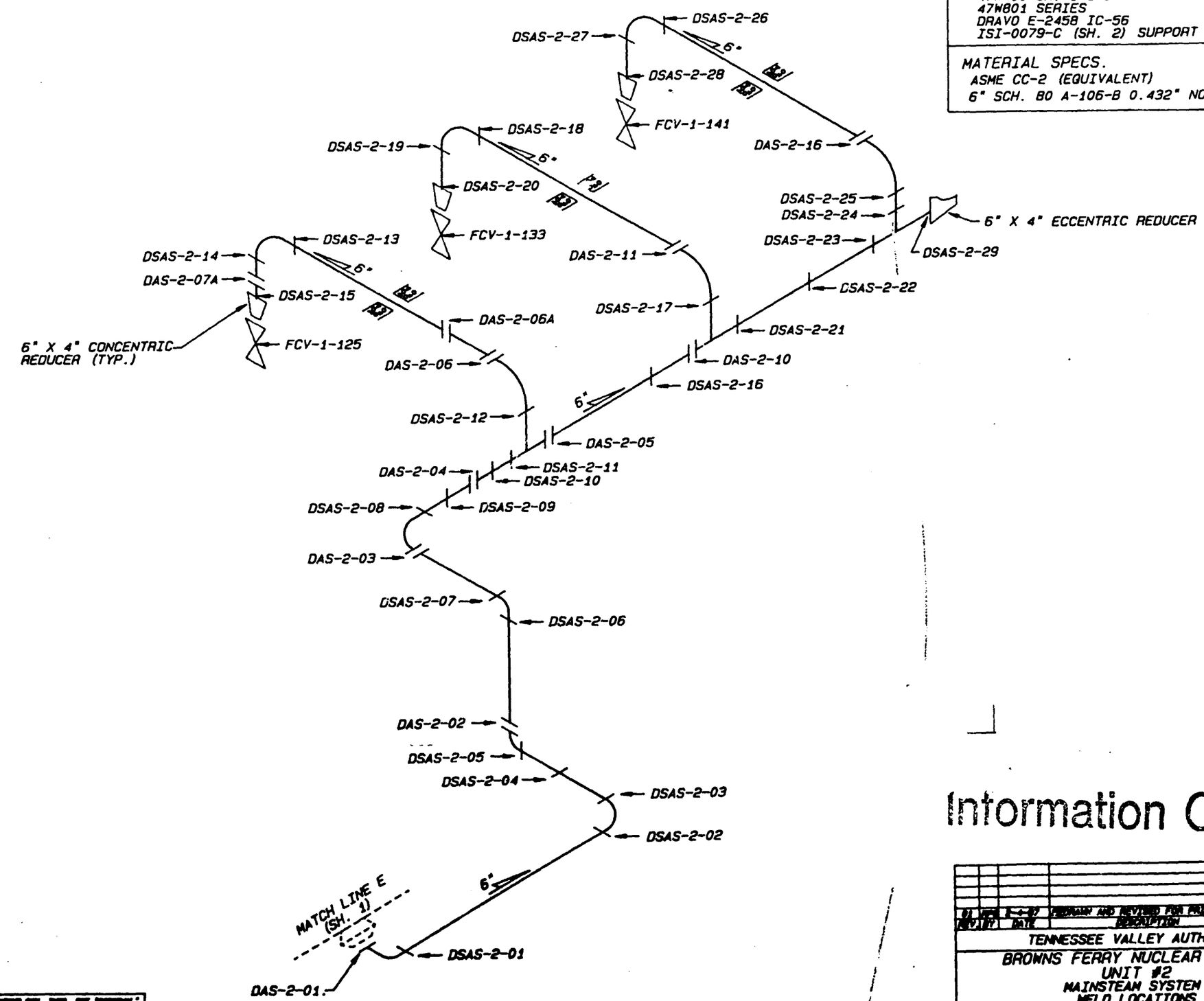

Information Only

REV	BY	DATE	DESCRIPTION
01	[illegible]	2-4-87	REDRAWN AND REVISED FOR PRISIN

TENNESSEE VALLEY AUTHORITY
BROWNS FERRY NUCLEAR PLANT
UNIT #2
MAINSTEAM SYSTEM
WELD LOCATIONS

DRAWN: * DATE: * CHECKED: * DATE: SUBMITTED DATE: APPROVED DATE: * SCALE: NTS SHEET 2 OF 2 SHEET(S) DRAWING NO. MS6-0021-C REV 01

REV	01
HARDWARE	TEKTRONIX 4100
SOFTWARE	TEKNICAD 8.2
FLOPPY OR TAPE #	FLOPPY # 8F-7