05996-DY-32

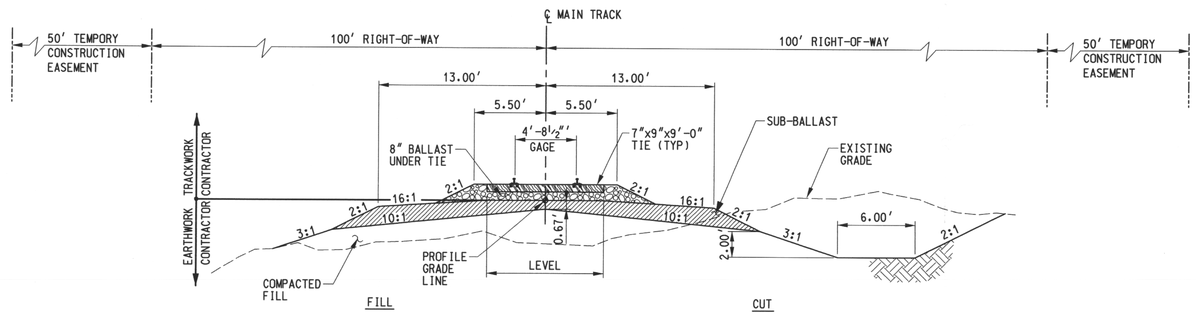

TYPICAL TRACK SECTION
N.T.S.

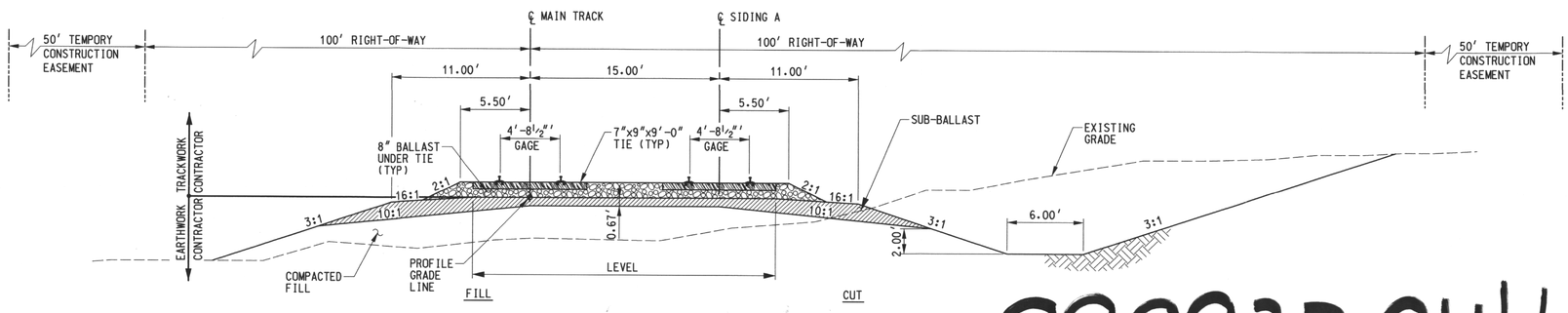

SIDING DOUBLE TRACK SECTION
N.T.S.

9909230146

APERTURE CARD

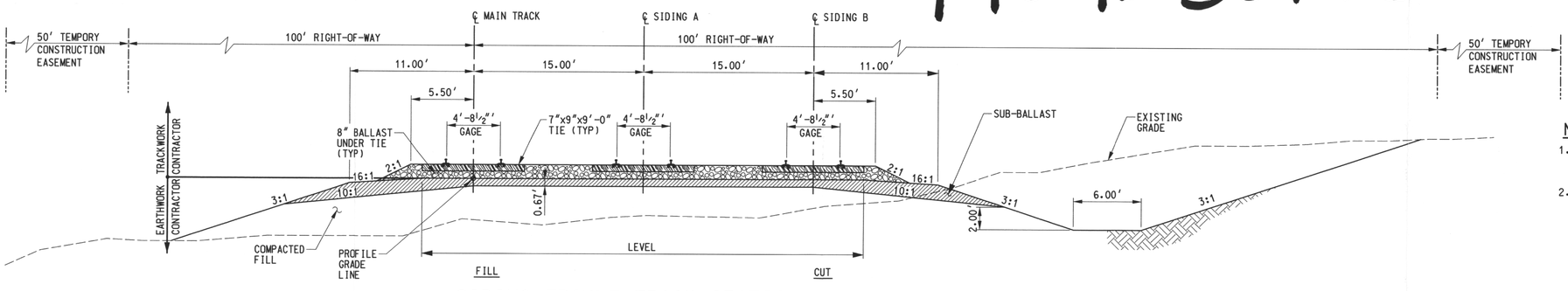

SIDING TRIPLE TRACK SECTION
N.T.S.

Docket # 72-22
Accession # 9809130192
Date 8/31/98 of Ltr
Regulatory Docket File

NOTES:

1. FOR GENERAL NOTES, LEGEND AND REFERENCE DRAWINGS, SEE DRAWING 05996-DY-30.
2. COMPACTED FILL REQUIREMENTS WILL BE BASED ON SITE GEOTECHNICAL INFORMATION DETERMINED DURING FINAL DESIGN.

REVISION	DESCRIPTION	DRAWN BY	CKD	DESIGN BY	CKD	RESP	LEAD	APPR	DATE
A	PRELIMINARY ISSUE- FOR BLM USE								

ARCH CIVIL CONC STL L & P INST P.S. S.A. FAC ELEC MAT'L

PFSF UNION-PACIFIC MAINLINE/
PFSF SIDING SECTIONS & DETAILS

PRIVATE FUEL STORAGE FACILITY
PRIVATE FUEL STORAGE, LLC
STONE & WEBSTER ENGINEERING CORPORATION
DENVER, COLORADO

DRAWING NUMBER 05996-DY-32-A

DESIGN BY R. EDLER | DRAWN BY R. EDLER | DESIGN CHK'D BY D.W. HAYES | CHK'D BY W.B. SWIGERT | SHEET C.O. NO. 0599602 | FILE NO. PFSDY32.DGN | PCT

9909230146

D-3