STONE & WEBSTER ENGINEERING CORPORATION

CALCULATION TITLE PAGE

*SEE INSTRUCTIONS ON REVERSE SIDE

▲5010.64 (FRONT)

CLIENT & PROJECT: PRIVATE FUEL STORAGE, LLC - PRIVATE FUEL STORAGE FACILITY

PAGE 1 OF 37

CALCULATION TITLE (Indicative of the Objective): ALLOWABLE BEARING CAPACITY OF THE CANISTER TRANSFER BUILDING SUPPORTED ON A MAT FOUNDATION

QA CATEGORY (✓): ☒ I - NUCLEAR SAFETY RELATED ☐ II ☐ III ☐ _____ OTHER

CALCULATION IDENTIFICATION NUMBER

J. O. OR W.O. NO.	DIVISION & GROUP	CURRENT CALC. NO.	OPTIONAL TASK CODE	OPTIONAL WORK PACKAGE NO.
05996.02	G(C)	13	—	345H

* APPROVALS - SIGNATURE & DATE			REV. NO. OR NEW CALC NO.	SUPERSEDES * CALC. NO. OR REV. NO.	CONFIRMATION * REQUIRED (✓)	
PREPARER(S)/DATE(S)	REVIEWER(S)/DATE(S)	INDEPENDENT REVIEWER(S)/DATE(S)			YES	NO
L.P. SINGH L.P. Singh 12-9-98	T.L. Aloysius T.L. Aloysius 12-10-98	T.L. Aloysius T.L. Aloysius 12-10-98	0	-		✓

DISTRIBUTION *

GROUP	NAME & LOCATION	COPY SENT (✓)	GROUP	NAME & LOCATION	COPY SENT (✓)
RECORDS MGT. FILES (OR FIRE FILE IF NONE)	JOB BOOK RA 2	ORIG			
	FIRE FILE	✓			

9902220080 990211
PDR ADOCK 07200022
B PDR

STONE & WEBSTER ENGINEERING CORPORATION

CALCULATION SHEET

Rev. 0

▲5010.65

CALCULATION IDENTIFICATION NUMBER				PAGE 2
J.O. OR W.O. NO.	DIVISION & GROUP	CALCULATION NO.	OPTIONAL TASK CODE	
05996.02	G(c)	13	—	

TABLE OF CONTENTS

TITLE PAGE	1
TABLE OF CONTENTS	2
OBJECTIVE	3
ASSUMPTIONS / DATA	3
GEOTECHNICAL PROPERTIES	5
METHOD OF ANALYSIS	6
FOOTING PLAN	8
LOADINGS	9
BEARING CAPACITY ANALYSIS	10
EFFECTIVE STRESS ANALYSIS	10
TOTAL STRESS ANALYSIS	18
BEARING CAPACITY ANALYSIS WITH FACTORED SEISMIC LOADINGS	23
BEARING CAPACITY ANALYSIS - LAYERED SOIL	31
SUMMARY OF ANALYSIS	34
CONCLUSIONS	35
REFERENCES	36
FIGURE 1	37

CALCULATION IDENTIFICATION NUMBER				
J.O. OR W.O. NO.	DIVISION & GROUP	CALCULATION NO.	OPTIONAL TASK CODE	PAGE 3
05996.02	G(C)	13	—	

OBJECTIVE

TO DETERMINE STATIC AND DYNAMIC ALLOWABLE BEARING CAPACITY OF THE CANISTER TRANSFER BUILDING SUPPORTED ON A MAT FOUNDATION AT THE PROPOSED SITE.

ASSUMPTIONS / DATA

THE FOOTPRINT OF THE CANISTER TRANSFER BUILDING FOUNDATION MAT AND ITS CROSS-SECTIONAL THICKNESS ARE SHOWN ON SWEC DWG No. 05996.01-EM-1 AND 05996.01-EM-3," CANISTER TRANSFER BUILDING, GENERAL ARRANGEMENT, SHEET 1 & SHEET 3". A FOUNDATION MAT OF SIZE 147 FT BY 275 FT, 5 FT THICK IS USED IN THE ANALYSIS. THIS FOUNDATION SIZE ALSO CORRESPONDS TO THE FOUNDATION MAT USED IN STRUCTURAL ANALYSIS [CALC. 05996.02-SC-5," SEISMIC ANALYSIS OF CANISTER TRANSFER BUILDING].

THE VARIOUS STATIC AND DYNAMIC LOAD COMBINATIONS FOR THE ANALYSIS OF THE BUILDING AND THE ASSOCIATED LOADS ARE SHOWN IN THE ABOVE REFERENCED STRUCTURAL CALC.

CALCULATION IDENTIFICATION NUMBER				
J.O. OR W.O. NO.	DIVISION & GROUP	CALCULATION NO.	OPTIONAL TASK CODE	PAGE 4
05996.02	G(C)	13	—	

THE GENERALIZED SOIL PROFILE IN THE AREA IS SHOWN ON FIGURE 1. THE SOIL PROFILE CONSISTS OF 30 FT OF SILTY SOILS (LAYER 1), OVERLYING 30 FT OF VERY DENSE FINE SAND (LAYER 2), OVERLYING EXTREMELY DENSE SILT ($N \geq 100$ BL/FT, LAYER 3).

LOAD CASES ANALYZED CONSIST OF COMBINATIONS OF VERTICAL STATIC, VERTICAL DYNAMIC (COMPRESSION AND UPLIFT, Y-DIRECTION), AND HORIZONTAL DYNAMIC (IN X & Z-DIRECTIONS). VARIOUS LOAD COMBINATIONS ARE EVALUATED AND ALL LOADS ARE TRANSFERRED TO THE BASE OF THE MAT.

GEOTECHNICAL PROPERTIES

LAYER 1

BASED ON THE U.U. TEST RESULTS, AVERAGE N-VALUES, AND UNIT WEIGHT MEASUREMENTS IN LAYER 1, THE FOLLOWING PROPERTIES ARE USED FOR THE BEARING CAPACITY ANALYSIS [FROM CALC. 05996.01-G(B)-04].

$\gamma_{MOIST} = 80$ PCF

$C_u = 2200$ psf
$\phi_u = 0°$ } TOTAL STRESS PARAMETERS

$\bar{c} = 0$
$\bar{\phi} = 30°$ } EFFECTIVE STRESS PARAMETERS

LAYER 2

BASED ON AVERAGE N-VALUES AND SOIL TYPE, FOLLOWING SOIL PROPERTIES ARE USED IN ANALYSIS.

$\gamma_{MOIST} = 125$ PCF

$\bar{c} = 0$
$\phi = 35°$ } EFFECTIVE STRESS PARAMETERS

NOTE: TOTAL STRESS PARAMETERS DO NOT APPLY TO THIS LAYER DUE TO THE GRANULAR NATURE OF THE SOILS.

METHOD OF ANALYSIS

(1) THE BUILDING MAT IS APPROXIMATED BY A 147' X 275' MAT, 5 FT IN THICKNESS.

(2) LOADS ARE OBTAINED FROM CALC. 05996.02-SC-5 AND ALL LOADS TRANSFERRED TO THE BOTTOM OF THE MAT COMBINATIONS OF VERTICAL AND LATERAL LOADING ARE ANALYZED FOR BEARING CAPACITY. MOMENTS, WHEN TRANSFERRED TO THE BOTTOM OF THE MAT, RESULT IN ECCENTRICITY OF THE APPLIED LOAD WITH RESPECT TO THE C.g. OF THE MAT. LATERAL LOAD WHEN COMBINED WITH THE VERTICAL LOAD RESULTS IN AN INCLINATION OF THE VERTICAL LOAD.

THE FOLLOWING LOAD COMBINATIONS ARE ANALYZED.

LOAD CASE I: STATIC
L.C. II: STATIC & DYNAMIC HORIZONTAL (1)
L.C. III: STATIC, DYNAMIC UPLIFT, & DYNAMIC HORIZONTAL
L.C. IV: STATIC, DYNAMIC VERTICAL (COMPRESSION) & DYNAMIC LATERAL

AT FIRST, THE DYNAMIC LOADS WERE COMBINED ASSUMING 100% OF THE DYNAMIC LOADING IN EACH DIRECTION. THIS IS A CONSERVATIVE ASSUMPTION. LOAD CASES WHERE THE REQUIRED FACTORS OF SAFETY WERE NOT OBTAINED WERE RE-ANALYZED USING A MORE REALISTIC APPROACH, WHERE 100% OF DYNAMIC LOADING IN ONE-DIRECTION IS COMBINED WITH 40% OF THE DYNAMIC LOAD IN THE 2ND AND/OR 3RD DIRECTIONS. (2)

(1) DYNAMIC LATERALS IN BOTH X & Z-DIRECTIONS ARE COMBINED

(2) FOR A DISCUSSION OF THIS APPROACH, REFER TO, "STANDARD FOR SEISMIC ANALYSIS OF SAFETY RELATED NUCLEAR STRUCTURES (REF. 5)

CALCULATION IDENTIFICATION NUMBER				PAGE 7
J.O. OR W.O. NO.	DIVISION & GROUP	CALCULATION NO.	OPTIONAL TASK CODE	
05996.02	G(c)	13	-	

METHOD (CONTINUED)

(3) AT FIRST THE ANALYSIS IS MADE ASSUMING THAT LAYER 1 (SILTY SOILS) IS OF INFINITE THICKNESS AND THE ENTIRE FAILURE SURFACE IS CONTAINED IN THAT LAYER. THIS IS A CONSERVATIVE ASSUMPTION SINCE LAYER 1 HAS THE LOWEST STRENGTH OF ALL 3 LAYERS ONSITE.

LOAD CASES WHERE THE MINIMUM REQUIRED FACTORS OF SAFETY WERE NOT OBTAINED WERE RE-ANALYZED (1) MODELING LAYER 2 AT A DEPTH OF 30 FT, WHICH INCREASED THE FACTOR OF SAFETY. LAYER 3 WAS NOT MODELED SINCE THE STRENGTH PROPERTIES OF LAYER 3 ARE EVEN HIGHER THAN THOSE OF LAYER 2 AS INDICATED BY THE HIGHER BLOWCOUNTS. THE PRESENCE OF LAYER 2 INCREASES THE FACTOR OF SAFETY. (1)
[REFERENCE (6): BRAJA M. DAS, "PRINCIPLES OF GEOTECHNICAL ENGINEERING, REF. 6]

(4) ALL COMPUTATIONS ARE PERFORMED TO DETERMINE ALLOWABLE PRESSURES FOR GENERAL BEARING CAPACITY FAILURE.

LOCAL BEARING CAPACITY (PUNCHING SHEAR) CALCULATIONS ARE NOT PERFORMED SINCE THIS FAILURE MODE IS NOT ANTICIPATED. LOCAL SHEAR OR PUNCHING SHEAR OCCURS WHERE THE SOIL FAILURE OCCURS ONLY AT THE EDGES OF THE FOOTING. DUE TO THE SIZE OF THE MAT, LOCAL OR PUNCHING SHEAR IS RULED OUT.

(1) THESE LOAD CASES RE-ANALYZED USING COMBINATIONS OF 100% SEISMIC LOAD IN ONE DIRECTION AND 40% OF THE SEISMIC LOAD IN EACH OF THE OTHER TWO DIRECTIONS.

STONE & WEBSTER ENGINEERING CORPORATION

CALCULATION SHEET

Rev. 0

▲5010.65

CALCULATION IDENTIFICATION NUMBER				PAGE 8
J.O. OR W.O. NO.	DIVISION & GROUP	CALCULATION NO.	OPTIONAL TASK CODE	
05996.02	G(C)	13	–	

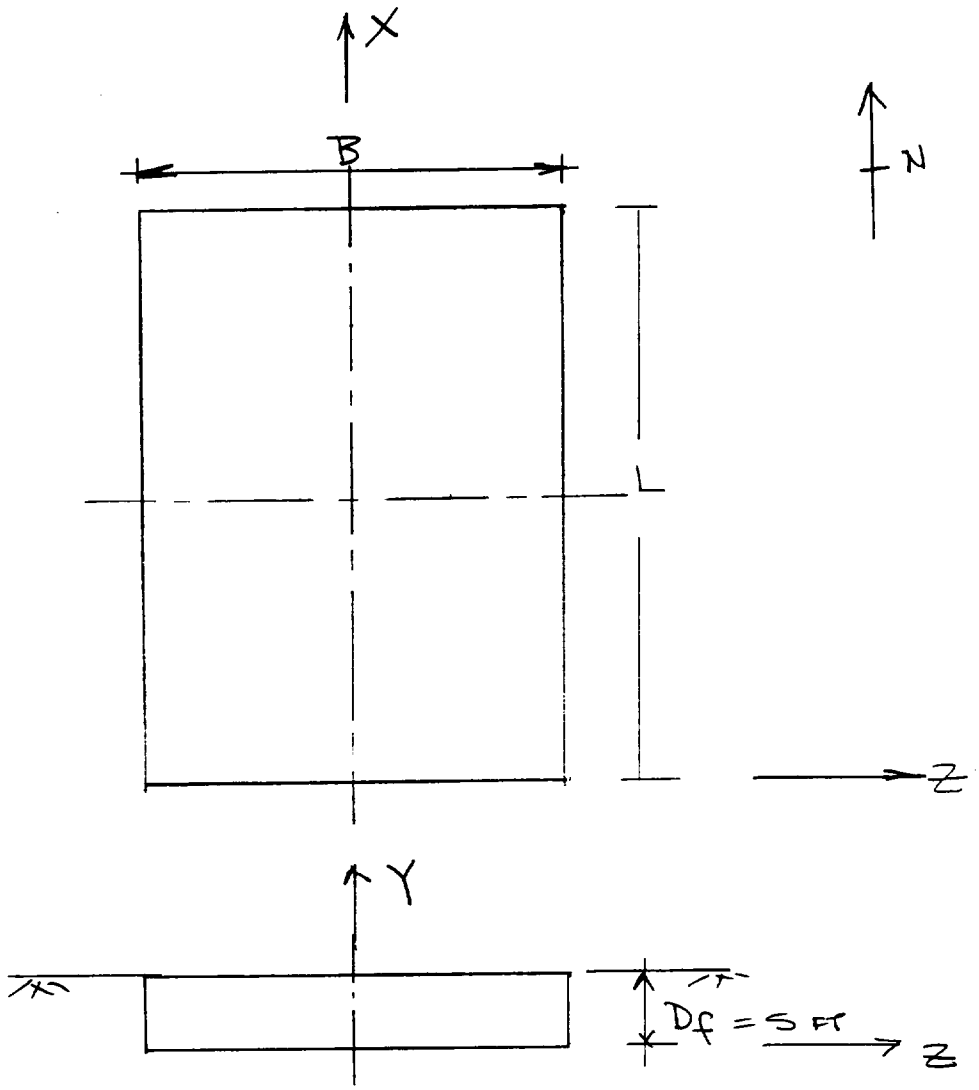

FOUNDATION SCHEMATIC & LOADING COORDINATES

[NOTE: THE COORDINATE SYSTEM IS CONSISTENT WITH THAT IN CALC. 05996.02-SC-5]

STONE & WEBSTER ENGINEERING CORPORATION

CALCULATION SHEET

Rev. 0

▲5010.65

CALCULATION IDENTIFICATION NUMBER				PAGE 9
J.O. OR W.O. NO.	DIVISION & GROUP	CALCULATION NO.	OPTIONAL TASK CODE	
05996.02	G(C)	13	—	

MAT SIZE ANALYZED : 147 FT x 275 FT (B x L)

LOADINGS

F_{VS} (VERTICAL STATIC) = 75,000 KIPS

F_{VD} (VERTICAL DYNAMIC) = 37,282 KIPS

F_{HZ} (DYNAMIC, Z-DIRECTION) = 58,243 KIPS

F_{HX} (DYNAMIC, X-DIRECTION) = 57,728 KIPS

M_X (DUE TO F_{HZ}) = 1,882,000 FT-KIPS

M_Z (DUE TO F_{HX}) = 1,711,485 FT-KIPS

NOTE: LOADS ARE AT BOTTOM OF FOUNDATION MAT AND OBTAINED FROM CALC. 05996.02-SC-5

EFFECTIVE STRESS ANALYSIS – FAILURE SURFACE IN LAYER 1

LOAD CASE I: STATIC LOADING ONLY

$\phi = 30°$ $\quad c = 0$

$\gamma = 80$ PCF (FOR BOTH INSITU SOIL AND SURCHARGE)

$D_f = 5'$ (FOOTING DEPTH)

$$q_{ULT} = cN_c \cdot \cancel{S_c \cdot d_c}^{\,0} \cdot i_c + \gamma D_f N_q S_q d_q i_q + \frac{1}{2}\gamma B N_\gamma \cdot S_\gamma \cdot d_\gamma \cdot i_\gamma$$

[GENERAL BEARING CAPACITY EQN.]

FOR STATIC LOADING, $F_V = 75{,}000$ KIPS, $B = 147$ FT, $L = 275$ FT

$i_q = i_\gamma = 1$ (SINCE LOADING IS CONCENTRIC)

$N_q = e^{\pi \tan\phi} \cdot \tan^2(45 + \phi/2)$ — — — — [EQN. 10.32, DAS (1990)]

$= e^{\pi \tan 30} \cdot \tan^2(45 + \frac{30}{2}) = 18.4$

$N_\gamma = (N_q - 1)\tan(1.4 \times \phi)$ — — — — — — [EQN. 10.39, DAS (1990)]

$= 17.4 \tan(1.4 \times 30) = 15.67$

$N_c = (N_q - 1)\cot\phi$ — — — — [EQN. 10.33, DAS 1990)]

$= 17.4 \times \cot 30° = 30.14$

$S_q = 1 + (B/L)\tan\phi$ — — — — [TABLE 10.2, DAS (1990)]

$= 1 + \frac{147}{275}\tan 30° = 1.31$

$S_\gamma = 1 - 0.4(B/L)$ — — — — — — [TABLE 10.2, DAS (1990)]

$= 1 - 0.4(147/275) = 0.79$

$S_c = 1 + (B/L)(N_q/N_c)$ — — — — — [TABLE 10.2, DAS (1990)]

$= 1 + (147/275)(18.4/30.14) = 1.33$

CALCULATION IDENTIFICATION NUMBER				PAGE 11
J.O. OR W.O. NO.	DIVISION & GROUP	CALCULATION NO.	OPTIONAL TASK CODE	
05996.02	G(c)	13	-	

FOR $D_f/B = 5/147 < 1$,

$d_q = 1 + 2\tan\phi(1-\sin\phi)^2 \cdot D_f/B$ — — — [TABLE 10.2, DAS (1990)]

$= 1 + 2\tan 30(1-\sin 30)^2 \cdot \frac{5}{147} = 1.01$

$d_\gamma = 1$ — — — — [TABLE 10.2, DAS (1990)]

$d_c = d_q - (1-d_q)/N_q \cdot \tan\phi$ — — — »

$q_{ULT} = 0 + 80 \times 5 \times 18.4 \times 1.31 \times 1.01 \times 1 + \frac{1}{2} \times 80 \times 147 \times 15.67 \times 0.79 \times 1 \times 1$

$= 9738 + 72790 = 82528$ PSF

$q_{AU} = 82{,}528 / 3^{(1)} = 27{,}500$ PSF OR 27.5 KSF

(1) A 3.0 F.S. USED TO DETERMINE ALLOWABLE STATIC BEARING CAPACITY.

LOAD CASE II: STATIC & DYNAMIC HORIZONTAL

$F_{VS} = 75{,}000K$, $M_x = 1{,}882{,}000$ FT.KIPS, $M_z = 1{,}711{,}485$ FT.KIPS

$e_B = 1{,}882{,}000/75000 = 25.09'$

$e_L = 1711485/75000 = 22.82'$

[NOTE: L', B' ARE EFFECTIVE LENGTH & WIDTH OF MAT DUE TO LOADING ECCENTRICITY]

$B' = B - 2e_B = 147 - 2\times 25.09 = 96.8$ FT

$L' = L - 2e_L = 275 - 2\times 22.82 = 229.4$ FT.

$N_q = 18.4$, $N_\gamma = 15.67$

$S_q = 1 + (B'/L')\tan\phi$

$= 1 + 0.422 \tan 30° = 1.24$

$B'/L' = 96.8/229.4 = 0.422$

$S_\gamma = 1 - 0.4(B'/L')$

$= 1 - 0.4 \times 0.422 = 0.83$

$d_q = 1 + 2\tan\phi(1-\sin\phi)^2 \cdot D_f/B'$

$= 1 + 2\tan 30(1-\sin 30)^2 \cdot 5/96.8 = 1.01$

$d_\gamma = 1$

[β'_x & β'_z ARE INCLINATION OF THE APPLIED LOADING WITH THE VERTICAL IN X & Z-DIRECTIONS]

$\beta'_z = \tan^{-1}(F_{HZ}/F_V) = \tan^{-1}(58{,}243/75{,}000) = 37.8°$ (1)

$\beta'_x = \tan^{-1}(F_{HX}/F_V) = \tan^{-1}(57{,}728/75000) = 37.6°$ (1)

HENCE USE $\beta' = 37.8$ IN BOTH X & Z DIRECTIONS.

$i_\gamma = (1-\beta/\phi)^2 = (1-37.8/30)^2 = 0.0$ [TABLE 10.2, DAS (1990)]

$i_q = (1-\beta/90)^2 = (1-37.8/90)^2 = 0.34$

(1) SINCE β'_x & β'_z VALUES ARE CLOSE, THE HIGHER OF THE TWO IS USED FOR BOTH.

STONE & WEBSTER ENGINEERING CORPORATION

CALCULATION SHEET

Rev. 0

▲ 5010.65

CALCULATION IDENTIFICATION NUMBER				PAGE 13
J.O. OR W.O. NO.	DIVISION & GROUP	CALCULATION NO.	OPTIONAL TASK CODE	
05996.02	G(c)	13	–	

$$q_{ult} = \overset{c=0}{0} + 80 \times 5 \times 18.4 \times 1.24 \times 1.01 \times 0.34 + \overset{i_\gamma=0}{0}$$

$$= 3134 \text{ PSF}$$

$$q_{All} = 3134/1.1^{(1)} = 2849 \text{ PSF or } 2.85 \text{ KSF}$$

(1) A 1.1 F.S. USED TO DETERMINE ALLOWABLE DYNAMIC BEARING CAPACITY.

LOAD CASE III
STATIC, DYNAMIC UPLIFT, AND DYNAMIC HORIZONTAL

$F_{VS} = 75{,}000$ K , $F_{VD} = -37282$ KIPS

$M_x = 1{,}882{,}000$ FT-K , $M_z = 1{,}711{,}485$

$F_V = 75{,}000 - 37{,}282$ K $= 37{,}718$ K

$e_B = 1{,}882{,}000 / 37{,}718 = 49.9'$; $e_L = 1{,}711{,}485/37{,}718 = 45.4$ FT

$B' = B - 2e_B = 147 - 2\times 49.9 = 47.2$ FT $\qquad B'/L' = 47.2/184.2 = 0.26$

$L' = L - 2e_L = 275 - 2\times 45.4 = 184.2$ FT

$N_q = 18.4$, $N_\gamma = 15.67$

$s_q = 1 + (B'/L')\tan\phi$

$= 1 + 0.26 \tan 30° = 1.15$

$s_\gamma = 1 - 0.4(B'/L')$

$= 1 - 0.4 \times 0.26 = 0.90$

$d_q = 1 + 2\tan\phi(1 - \sin\phi)^2 \cdot D_f/B'$

$= 1 + 2\tan 30 (1 - \sin 30)^2 \cdot 5/47.2 = 1.03$

$d_\gamma = 1$

$\beta'_z = \tan^{-1}(F_{HZ}/F_V) = \tan^{-1}(58{,}243/37{,}718) = 57.1° = \beta'_x$ (*)

(* SINCE $F_{HZ} \simeq F_{HX}$)

$i_\gamma = (1 - \beta/\phi)^2 = (1 - 57.1/30)^2 = 0.0$

$i_q = (1 - \beta/90)^2 = (1 - 57.1/90)^2 = 0.13$

STONE & WEBSTER ENGINEERING CORPORATION

CALCULATION SHEET

Rev. 0

▲ 5010.65

CALCULATION IDENTIFICATION NUMBER				PAGE 15
J.O. OR W.O. NO.	DIVISION & GROUP	CALCULATION NO.	OPTIONAL TASK CODE	
05996.02	G(C)	13	-	

$$q_{ult} = \overset{c=0}{0} + 80 \times 5 \times 18.4 \times 1.15 \times 1.03 \times 0.13 + \overset{\gamma=0}{0} = 1133 \text{ PSF}$$

$$q_{all} = 758 / 1.1 = 1030 \text{ PSF} \approx 1.03 \text{ KSF}$$

LOAD CASE : IV
STATIC, DYNAMIC VERTICAL, AND DYNAMIC HORIZONTAL.

$F_{VS} = 75{,}000$ K , $F_{VD} = 37282$ K

$M_x = 1{,}882{,}000$ FT-K, $M_z = 1{,}711{,}485$ FT-K.

$F_V = 75000 + 37282 = 112{,}282$ K

$e_B = 1{,}882{,}000 / 112{,}282 = 16.8'$; $e_L = 1{,}711{,}485/112{,}282 = 15.2'$

$B' = B - 2e_B = 147 - 2\times16.8 = 113.4$ $\quad B'/L' = 113.4/244.6$

$L' = L - 2e_L = 275 - 2\times15.2 = 244.6$ $\quad = 0.46$

$N_q = 18.4$, $N_\gamma = 15.67$

$S_q = 1 + (B'/L')\tan\phi = 1 + 0.46\tan 30^\circ = 1.27$

$S_\gamma = 1 - 0.4(B'/L') = 1 - 0.4\times0.46 = 0.82$

$d_q = 1 + 2\tan\phi(1-\sin\phi)^2 \cdot D_f/B'$

$= 1 + 2\tan 30(1-\sin 30)^2 \cdot 5/113.4 = 1.01$

$d_\gamma = 1$

$\beta'_z = \tan^{-1}(F_{HZ}/F_V) = \tan^{-1}(58{,}243/112{,}282) = 27.4^\circ = \beta'_x$

$i_\gamma = (1-\beta/\phi)^2 = (1-27.4/30)^2 = 0.007 \simeq 0.01$

$i_q = (1-\beta/90)^2 = (1-27.4/90)^2 = 0.48$

$q_{ult} = \overset{c=0}{0} + 80\times5\times18.4\times1.27\times1.01\times0.48 + \frac{1}{2}\times80\times113.4\times15.67\times0.82\times1\times0.01$

$= 4532 + 583 = 5115$ PSF

$q_{all} = 5115/1.1 = 4650$ PSF OR 4.7 KSF

STONE & WEBSTER ENGINEERING CORPORATION

CALCULATION SHEET

Rev. 0

▲ 5010.65

CALCULATION IDENTIFICATION NUMBER				PAGE 17
J.O. OR W.O. NO.	DIVISION & GROUP	CALCULATION NO.	OPTIONAL TASK CODE	
05996.02	G(c)	13	–	

SUMMARY OF ACTUAL & ALLOWABLE BEARING PRESSURES
[DRAINED ANALYSIS]

1. VERTICAL STATIC LOAD ONLY (LOAD CASE I)

$P = 75{,}000$ k, $B = 147$, $L = 275$

$\sigma_{ACT} = \frac{P}{A} = 75000/(147)(275) = 1.86$ KSF < 27.5 KSF $= q_{ALL}$

HENCE O.K.

2. VERTICAL STATIC & HORIZONTAL DYNAMIC (LOAD CASE II)

$P = 75{,}000$ K, $B' = 96.8'$, $L' = 229.4'$

$\sigma_{ACT} = \frac{P}{A} = \frac{75000}{(96.8)(229.4)} = 3.38$ KSF > 2.85 KSF $= q_{ALL}$

[NO GOOD].

3. VERTICAL STATIC, DYNAMIC UPLIFT, AND DYNAMIC HORIZONTAL
LOAD CASE III

$P = 37{,}718$ K, $B' = 47.2'$, $L' = 184.2$

$\sigma_{ACT} = \frac{P}{A} = \frac{37{,}718}{(47.2)(184.2)} = 4.34$ KSF > 1.03 KSF $= q_{ALL}$

[NO GOOD]

LOAD CASE IV

4. STATIC & DYNAMIC VERTICAL, AND DYNAMIC HORIZONTAL

$P = 112{,}282$ KIPS, $B' = 113.4'$, $L' = 244.6'$

$\sigma_{ACT} = P/A = \frac{112{,}282}{(113.4)(244.6)} = 4.05$ KSF < 4.7 KSF $= q_{ALL}$

HENCE O.K.

TOTAL STRESS ANALYSIS – FAILURE SURFACE IN LAYER 1.

TOTAL STRESS - UNDRAINED ANALYSIS

$C = 2200$ PSF (COHESION)

$\phi = 0$

$\gamma = 80$ PCF, $D_f = 5'$

LOAD CASE I : STATIC LOAD ONLY

$q_{ULT} = C N_c S_c d_c i_c + \gamma . D_f . N_q . S_q . d_q . i_q + \frac{1}{2} \gamma . B . N_\gamma . S_\gamma . d_\gamma . i_\gamma$

$N_q = e^{\pi \tan\phi} . \tan^2(45 + \phi/2)$

$= e^0 . \tan^2(45) = 1$

$N_\gamma = (N_q - 1) \tan(1.4\phi) = 0$

$N_c = 5.14$ TABLE 10.1 DAS (1990)

$S_q = 1 + (B/L) \tan\phi = 1.0$

$S_c = 1 + \left(\frac{B}{L}\right)\left(\frac{N_q}{N_c}\right) = 1 + 0.53 \times \frac{1}{5.14} = 1.10$

FOR STATIC LOADING

$F_v = 75000$ K

$B = 147$ FT

$L = 275$ FT

$B/L = \frac{147}{275} = 0.53$

FOR $D_f/B < 1$,

$d_q = 1 + 2 \tan\phi (1 - \sin\phi)^2 . D_f/B = 1.0$

$d_c = d_q - (1 - d_q)/(N_q \tan\phi) = 1.0$

$i_c = i_q = 1.0$ FOR STATIC CASE

$q_{ULT} = 2200 \times 5.14 \times 1.10 \times 1.0 \times 1.0 + 80 \times 5 \times 1 \times 1.0 \times 1.0 \times 1$

$= 12439 + 400 = 12839$

$q_{ALL} = 12839 / 3.0 = 4279$ PSF OR 4.3 KSF.

LOAD CASE II: STATIC & DYNAMIC HORIZONTAL

$F_{VS} = 75{,}000$ K, $M_x = 1{,}882{,}000$ FT-KIPS, $M_z = 1{,}711{,}485$ FT-KIPS.

$e_B = 25.09'$, $e_L = 22.82'$

$B' = 96.8$ FT, $L' = 229.4$ FT. } FROM Pg. 12

$B'/L' = 0.422$

$N_q = 1.0$

$N_\gamma = 0$

$N_c = 5.14$

$S_q = 1 + (B'/L')\tan\phi = 1.0$

$S_c = 1 + \left(\frac{B'}{L'}\right)\left(\frac{N_q}{N_c}\right) = 1 + 0.422 \times \frac{1}{5.14} = 1.08$

FOR $D_f/B' < 1$

$d_q = 1 + 2\tan\phi\,(1-\sin\phi)^2 \cdot D_f/B = 1.0$

$d_c = 1.0$

$\beta'_z = 37.8 \simeq \beta'_x$

$i_q = i_c = (1 - \beta/90)^2 = \left(1 - \frac{37.8}{90}\right)^2 = 0.34$

$q_{ULT} = 2200 \times 5.14 \times 1.08 \times 1.0 \times 0.34 + 80 \times 5 \times 1.0 \times 1.0 \times 1.0 \times 0.34$

$= 4152 + 136 = 4288$ PSF

$q_{ALL} = 4288/1.1 = 3{,}898$ PSF OR 3.9 KSF

LOAD CASE III
STATIC, DYNAMIC UPLIFT, AND DYNAMIC HORIZONTAL

$F_{VS} = 75000$ K, $F_{VD} = -37,282$ KIP

$M_X = 1,882,000$ FT-K, $M_Z = 1,711,485$ FT-KIP

$F_V = 75000 - 37,282 = 37,718$ KIPS

$e_B = 49.9'$, $E_L = 45.4$ FT PG. 14 OF CALC.

$B' = 47.2'$. $L' = 184.2$ FT

$B'/L' = 0.26$

$N_q = 1.0$, $N_\gamma = 0$, $N_c = 5.14$

$s_q = 1 + \left(\frac{B'}{L'}\right) \tan\phi = 1.0$

$s_c = 1 + \left(\frac{B'}{L'}\right)\left(\frac{N_q}{N_c}\right) = 1 + 0.26 \times \frac{1}{5.14} = 1.05$

FOR $D_f/B' < 1$,

$d_q = 1.0$, $d_c = 1.0$

$\beta'_z \ (\pm \beta'_x) = 57.1$

$i_q = i_c = (1 - \beta/90)^2 = (1 - 57.1/90)^2 = 0.13$

$q_{ult} = 2200 \times 5.14 \times 1.05 \times 1.0 \times 0.13 + 80 \times 5 \times 1.0 \times 1.0 \times 1.0 \times 0.13$

$= 1544 + 52 = 1596$ PSF

$q_{all} = 1596/1.1 = 1451$ PSF OR $1.45 \approx 1.5$ KSF

CALCULATION IDENTIFICATION NUMBER				PAGE 21
J.O. OR W.O. NO.	DIVISION & GROUP	CALCULATION NO.	OPTIONAL TASK CODE	
05996.02	G(C)	13	—	

LOAD CASE IV
STATIC, DYNAMIC VERTICAL, AND DYNAMIC HORIZONTAL.

$F_{VS} = 75000\,K$, $F_{VD} = 37282\,K$

$M_X = 1,882,000$ FT-K , $M_Z = 1,711,485$ FT-K

$F_V = 75000 + 37282 = 112,382\,K$

$e_B = 16.8'$, $e_L = 15.2'$ PG. 16 of CALC.

$B' = 113.4'$, $L' = 244.6'$, $B'/L' = 0.46$

$N_q = 1.0$, $N_\gamma = 0$, $N_c = 5.14$

$S_q = 1 + \left(\frac{B'}{L'}\right) \tan\phi = 1.0$

$S_c = 1 + \left(\frac{B'}{L'}\right)\left(\frac{N_q}{N_c}\right) = 1 + 0.46 \times \frac{1}{5.14} = 1.09$

FOR $D_f/B' < 1$

$d_q = 1.0$, $d_c = 1.0$

$\beta'_z \left(\pm \beta'_x\right) = 27.4°$

$i_q = i_c = \left(1 - \beta'/90\right)^2 = \left(1 - \frac{27.4}{90}\right)^2 = 0.48$

$q_{ULT} = 2200 \times 5.14 \times 1.09 \times 1.0 \times 0.48 + 80 \times 5 \times 1.0 \times 1.0 \times 1.0 \times 0.48$

$= 5916 + 192 = 6108$ PSF

$q_{ALL} = 6108 / 1.1 = 5553$ PSF OR 5.6 KSF

NET $q_{ULT} = 6108 - 5 \times 80 = 5708$ PSF

NET $q_{ALL} = 5708 / 1.1 = 5189$ PSF OR $\simeq 5.2$ KSF.

STONE & WEBSTER ENGINEERING CORPORATION

CALCULATION SHEET

REV. 0

▲5010.65

CALCULATION IDENTIFICATION NUMBER				PAGE 22
J.O. OR W.O. NO.	DIVISION & GROUP	CALCULATION NO.	OPTIONAL TASK CODE	
05996.02	G(C)	13	-	

SUMMARY OF ACTUAL & ALLOWABLE BEARING PRESSURES

[UNDRAINED ANALYSIS]

1. LOAD CASE I - STATIC LOAD ONLY

$\sigma_{ACT}^{(1)} = 1.86$ KSF < 4.3 KSF $= q_{ALL}^{(2)}$ HENCE O.K

2. LOAD CASE II - STATIC & HORIZONTAL DYNAMIC

$\sigma_{ACT} = 3.38$ KSF < 3.9 KSF $= q_{ALL}$ HENCE OK.

3. LOAD CASE III : STATIC DYNAMIC UPLIFT & DYNAMIC HORIZONTAL

$\sigma_{ACT} = 4.34$ KSF > 1.45 KSF $= q_{ALL}$

NO GOOD.

4. LOAD CASE IV: STATIC, DYNAMIC VERTICAL COMPRESSION & DYAMIC HORIZONTAL

$\sigma_{ACT} = 4.05$ KSF < 5.2 KSF $= q_{ALL}$

HENCE O.K.

NOTE

(1) q_{ACT} FROM Pg. 17 OF CALC

(2) q_{ALL} FROM Pgs 18,19,20,21 OF CALC.

FOR COMBINED EARTHQUAKE, CONSIDER THE FOLLOWING LOADING CONDITIONS FOR THOSE CASES THAT SHOWED A F.S. OF LESS THAN 1.1.

100% DYNAMIC LOADING IN ONE DIRECTION IS COMBINED WITH 40% DYNAMIC IN THE OTHER 2 DIRECTIONS.

LOAD CASE II STATIC LOAD + 100% DYNAMIC IN Z-DIRECTION + 40% DYNAMIC IN X-DIRECTION

LOAD CASE IIIA: STATIC + 100% DYNAMIC UPLIFT + 40% DYNAMIC IN Z-DIRECTION + 40% DYNAMIC IN X-DIRECTION.

LOAD CASE IIIB: STATIC + 40% DYNAMIC UPLIFT COMBINED WITH 100% DYNAMIC HORIZONTAL IN Z-DIRECTION, 40% IN X-DIRECTION.

EFFECTIVE STRESS (DRAINED) ANALYSIS

LOAD CASE II: $F_V = 75{,}000K$, $M_X = 1{,}882{,}000$ FT-K,

$M_Z = 0.40 \times 1{,}711{,}485$
$= 684{,}594$ FT-K

$F_{HZ} = 58{,}243$ K

$F_{HX} = 0.40 \times 57{,}728 = 23{,}091$ K.

$\phi = 30°$, $c = 0$

$e_B = \frac{1{,}882{,}000}{75{,}000} = 25.09$, $e_L = \frac{684{,}594}{75000} = 9.13$ FT

$B' = 147 - 2 \times 25.09 = 96.8$ FT, $L' = 275 - 2 \times 9.13 = 256.7$ FT

$B'/L' = 96.8/256.7 = 0.38$

$N_q = 18.4$, $N_\gamma = 15.67$

$S_q = 1 + (B'/L')\tan\phi = 1 + 0.38\tan 30° = 1.22$

$S_\gamma = 1 - 0.4(B'/L') = 1 - 0.4 \times 0.38 = 0.85$

CALCULATION IDENTIFICATION NUMBER				PAGE 24
J.O. OR W.O. NO.	DIVISION & GROUP	CALCULATION NO.	OPTIONAL TASK CODE	
05996.02	G(C)	13	—	

$d_q = 1 + 2\tan\phi\,(1-\sin\phi)^2 \cdot D_f/B'$

$= 1 + 2\tan 30\,(1-\sin 30)^2\, 5/96.8 = 1.01$

$d_\gamma = 1$

$\beta'_z = \tan^{-1}(F_{HZ}/F_V) = \tan^{-1}(58{,}243/75{,}000) = 37.8°$

$\beta'_x = \tan^{-1}(F_{HX}/F_V) = \tan^{-1}(23{,}091/75000) = 17.1°$

$i_\gamma = 0$
$i_q = 0.34$] From Pg 12

$q_{ULT} = 0 + 80 \times 5 \times 18.4 \times 1.22 \times 1.01 \times 0.34 + 0$

$= 3083$ PSF.

$q_{ALL} = 3083/1.1 = 2803$ PSF OR 2.8 KSF

$\sigma_{ACT} = \dfrac{75000}{96.8 \times 256.7} = 3.02$ KSF $>$ 2.8 KSF $= q_{ALL}$

HENCE NO GOOD

LOAD CASE IIIA: STATIC + 100% DYNAMIC UPLIFT COMBINED WITH 40% DYNAMIC LATERAL IN Z & X DIRECTIONS

$F_{VS} = 75000K$, $F_{VD} = -37282$ KIPS

$F_V = 75000 - 37282 = 37{,}718$ KIPS

$M_X = 0.4 \times 1{,}882{,}000$ FT-K $= 752{,}800$ FT K

$M_Z = 0.4 \times 1{,}711{,}485$ FT-K $= 684{,}594$ FTK

$F_{HZ} = 0.4 \times 58{,}243$ K $= 23297$ K

$F_{HX} = 0.4 \times 57{,}728$ K $= 23{,}091$ K.

$\phi = 30°$, $C = 0$

$e_B = 752{,}800 / 37{,}718 = 19.96$ FT

$e_L = 684{,}594 / 37{,}718 = 18.15$ FT

$B' = B - 2e_B = 147 - 2 \times 19.96 = 107.1$ FT

$L' = L - 2e_L = 275 - 2 \times 18.15 = 238.7$ FT

$B'/L' = 107.1 / 238.7 = 0.45$

$N_q = 18.4$, $N_\gamma = 15.67$

$S_q = 1 + (B'/L') \tan\phi = 1 + 0.45 \tan 30° = 1.26$

$S_\gamma = 1 - 0.4 (B'/L') = 1 - 0.4 \times 0.45 = 0.82$

$d_q = 1 + 2\tan\phi (1 - \sin\phi)^2 D_f/B'$

$= 1 + 2\tan 30 (1 - \sin 30)^2 5/107.1 = 1.01$

$d_\gamma = 1$

$\beta'_Z = \tan^{-1}(F_{HZ}/F_V) = \tan^{-1}\left(\frac{23297}{37718}\right) = 31.7°$

$i_\gamma = (1 - \beta/\phi)^2 = \left(1 - \frac{31.7}{30}\right)^2 = 0$

STONE & WEBSTER ENGINEERING CORPORATION

CALCULATION SHEET

Rev. 0

▲5010.65

CALCULATION IDENTIFICATION NUMBER				PAGE 26
J.O. OR W.O. NO.	DIVISION & GROUP	CALCULATION NO.	OPTIONAL TASK CODE	
05996.02	G(c)	13	—	

$$i_q = (1-\beta/90)^2 = \left(1-\frac{31.7}{90}\right)^2 = 0.42$$

$$q_{ult} = \overset{\to c=0}{0} + 80 \times 5 \times 18.4 \times 1.26 \times 1.01 \times 0.42 + \overset{\to i_\gamma=0}{0}$$

$$= 3933 \text{ PSF} \quad \text{PSF}$$

$$q_{all} = 3933/1.1 = 3575 \text{ PSF} \simeq 3.6 \text{ KSF}$$

$$q_{Act.} = \frac{37,718}{B' \cdot L'} = \frac{37718}{(107.1)(238.7)} = 1.47 \text{ KSF} < 3.6 \text{ KSF}$$

HENCE OK

LOAD CASE IIIB: STATICLY 40% DYNAMIC UPLIFT COMBINED WITH 100% DYNAMIC LATERAL IN Z-DIRECTION, 40% IN X-DIRECTION

$F_V = 75000 - 0.4 \times 37282 = 60{,}087$ K.

$M_X = 1{,}882{,}000$ FT.K, $M_Z = 0.4 \times 1{,}711{,}485 = 684{,}594$ FTK

$F_{HZ} = 58243$ K, $F_{HX} = 0.4 \times 57{,}728 = 23{,}091$ K

$\phi = 30°$, $c = 0$

$e_B = \frac{1{,}882{,}000}{60{,}087} = 31.32$ FT, $e_L = \frac{684{,}594}{60{,}087} = 11.4$ FT

$B' = 147 - 2 \times 31.32 = 84.4'$; $L' = 275 - 2 \times 11.4 = 252.20'$

$B'/L' = 84.4/252.2 = 0.33$

$N_q = 18.4$, $N_\gamma = 15.67$

$S_q = 1 + (B'/L') \tan\phi = 1 + 0.33 \tan 30° = 1.19$

$S_\gamma = 1 - 0.4(B'/L') = 1 - 0.4 \times 0.33 = 0.13$

$d_q = 1 + 2\tan 30 (1 - \sin 30)^2 5/84.4 = 1.02$

$d_\gamma = 1$

$\beta_z' = \tan^{-1}(F_{HZ}/F_V) = \tan^{-1}(58{,}243/60{,}087) = 44.1°$

$i_\gamma = (1 - \beta/\phi)^2 = (1 - 44.1/30)^2 = 0$

$i_q = (1 - \beta/90)^2 = \left(1 - \frac{44.1}{90}\right)^2 = 0.26$

$q_{ult} = \overset{c=0}{0} + 80 \times 5 \times 18.4 \times 1.19 \times 1.02 \times 0.26 + \overset{i_\gamma=0}{0} = 2323.0$

$q_{all} = 2323.0/1.1 = 2111$ PSF OR 2.1 KSF.

$q_{act} = \frac{60{,}087}{84.4 \times 252.2} = 2.82$ KSF > 2.1 (N.G)

TOTAL STRESS OR UNDRAINED ANALYSIS : $c = 2200$ PSF, $\phi = 0$

CHECK LOAD CASE III.A: STATIC + 100% DYNAMIC UPLIFT COMBINED WITH 40% DYNAMIC HORIZONTAL IN Z & X - DIRECTIONS

$F_V = 37{,}718$ KIPS, $M_X = 752{,}800$ FT-K, $M_Z = 684{,}594$ FT-K
$F_{HZ} = 23{,}297$ K, $F_{HX} = 23{,}091$ K.

$$q_{ult} = cN_c S_c d_c i_c + \gamma D_f N_q \cdot S_q \cdot d_q \cdot i_q + \frac{1}{2}\gamma \cdot B \cdot \cancel{N_\gamma}^{\,0} \cdot S_\gamma \cdot d_\gamma \cdot i_\gamma$$

$N_q = 1$, $N_\gamma = 0$, $N_c = 5.14$

$B' = 107.1'$, $L' = 238.7'$, $B'/L' = 107.1/238.7 = 0.45$

$S_q = 1 + (B/L)\tan\phi = 1.0$

$S_c = 1 + (B/L)(N_q/N_c) = 1 + 0.45 \times \frac{1}{5.14} = 1.09$

$d_q = 1 + 2\cancel{\tan\phi}^{\,0}(1 - \sin\phi)^2 D_f/B' = 1.0$

$d_c = d_q - (1 - d_q)/(N_q \tan\phi) = 1.0$

$\beta'_z = 31.7°$

$i_c = i_q = (1 - \beta/90)^2 = (1 - \frac{31.7}{90})^2 = 0.42$

$q_{ult} = 2200 \times 5.14 \times 1.09 \times 1.0 \times 0.42 + 80 \times 5 \times 1 \times 1 \times 1 \times 0.42$

$= 5176 + 168 = 5344$ PSF

$q_{all} = 5344/1.1 = 4858$ PSF OR 4.9 KSF

$$q_{act} = \frac{37718}{107.1 \times 238.7} = 1.48 \text{ KSF} < 4.9 \text{ KSF}$$

HENCE O.K

CALCULATION IDENTIFICATION NUMBER				PAGE 29
J.O. OR W.O. NO.	DIVISION & GROUP	CALCULATION NO.	OPTIONAL TASK CODE	
05996.02	G(C)	13	–	

LOAD CASE IIIB: STATIC + 40% DYNAMIC UPLIFT COMBINED WITH 100% DYNAMIC LATERAL IN Z-DIRECTION, 40% IN X-DIRECTION.

$F_Y = 60{,}087$ K, $M_X = 1{,}882{,}000$ FT-K, $M_Z = 684{,}594$ FT-K

$F_{HZ} = 58243$ K, $F_{HX} = 23{,}091$ K

$B' = 84.4'$, $L' = 252.2'$, $B'/L' = 0.33$

$N_q = 1$, $N_\gamma = 0$, $N_c = 5.14$

$S_q = 1 + (B'/L')\tan\phi = 1.0$

$S_c = 1 + (B'/L')(N_q/N_c) = 1 + 0.33 \times \frac{1}{5.14} = 1.06$

$d_q = 1.0$, $d_c = 1.0$ } FOR $\phi = 0$

$\beta'_Z = 44.1$

$i_c = i_q = (1 - \beta/90)^2 = \left(1 - \frac{44.1}{90}\right)^2 = 0.26$

$q_{ult} = 2200 \times 5.14 \times 1.06 \times 1.0 \times 0.26 + 80 \times 5 \times 1 \times 1 \times 1 \times 0.26$

$= 3116 + 104 = 3220$ PSF.

$q_{all} = 3220/1.1 = 2927$ PSF OR 2.9 KSF

$q_{actual} = \frac{60{,}087}{(84.4)(252.2)} = 2.82$ KSF < 2.9 KSF

HENCE O.K.

STONE & WEBSTER ENGINEERING CORPORATION

CALCULATION SHEET

Rev. 0

▲ 5010.65

CALCULATION IDENTIFICATION NUMBER				
J.O. OR W.O. NO.	DIVISION & GROUP	CALCULATION NO.	OPTIONAL TASK CODE	PAGE 30
05996-02	G(C)	13	—	

SUMMARY OF ACTUAL & ALLOWABLE BEARING PRESSURES FOR REDUCED DYNAMIC LOADINGS.

LOAD CASE	DRAINED ANALYSIS			UNDRAINED ANALYSIS		
	σ_{ACT} KSF	q_{ALL} KSF	DISPOSITION	σ_{ACT} KSF	q_{ALL} KSF	DISPOSITION
II	3.02	2.8	NO GOOD	ANALYSIS NOT REQUIRED [FROM PAGE 22]		
III A	1.47	3.6	HENCE O.K	1.47	4.9	HENCE O.K
III B	2.82	2.1	NO GOOD	2.82	2.9	HENCE O.K

LOAD CASE II: STATIC LOAD + 100% DYNAMIC HORIZONTAL IN Z-DIRECTION & 40% DYNAMIC IN X-DIRECTION

LOAD CASE IIIA STATIC LOAD + 100% DYNAMIC UPLIFT + 40% DYNAMIC HORIZONTAL IN EACH OF X & Z-DIRECTIONS

LOAD CASE IIIB: STATIC LOAD + 40% DYNAMIC UPLIFT COMBINED WITH 100% DYNAMIC HORIZONTAL IN Z-DIRECTION & 40% IN X-DIRECTIONS.

LOAD CASES IIIA & IIIB FOR THE DRAINED ANALYSIS ARE RE-ANALYZED USING METHOD OF ANALYSIS FOR FOUNDATIONS ON LAYERED SOIL (REF. 6)

FOUNDATIONS OVER LAYERED SAND

IN THIS METHOD, THE BEARING CAPACITY IS DETERMINED FOR EACH LAYER, AS IF THE FOUNDATION IS SUPPORTED ON THAT LAYER ALONE AND MODIFIED FOR THE PRESENCE OF THE SECOND LAYER

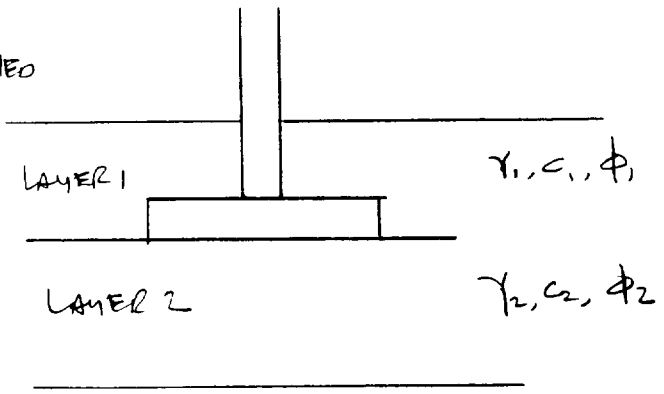

SOIL PROFILE AT THE SITE CONSISTS OF 30' OF SILTY SOILS (N ≈ 15 BLOWS/FT) OVERLYING 30' OF VERY DENSE FINE SAND (N > 100 B/FT), OVERLYING VERY DENSE (N > 100 BL/FT) SILT.

LAYER ① : $\phi = 30°$

LAYER ② : $\phi = 35°$ (CONSERVATIVE ASSUMPTION)

$$q_{ult} = q_{u(t')} + \left[q_{u(b')} - q_{u(t')}\right]\left(1 - \frac{H}{H_f}\right)^2 \quad \text{--- (REF. 6)}$$

WHERE $q_{u(t')}$, $q_{u(b')}$ ARE THE ULTIMATE BEARING CAPACITY VALUES FOR TOP & BOTTOM LAYERS RESPECTIVELY.

$H = 30 - 5 = 25'$ (BELOW BASE OF MAT)

H_f = FOOTING WIDTH = B!

ONLY THOSE LOAD CASES ARE EVALUATED WHERE THE ACTUAL BEARING PRESSURES EXCEED THE ALLOWABLES FOR SEMI INFINITE LAYER ① THICKNESS.

[H = THICKNESS OF LAYER BELOW BOTTOM OF MAT.]

LOAD CASE II: VERTICAL STATIC & HORIZONTAL DYNAMIC (100% IN Z-DIRECTION & 40% IN X-DIRECTION)

$q_{u(t')} = 3.08$ KSF (Pg 24)

$B' = 96.8'$, $L = 256.7'$, $B'/L' = 0.38$ (Pg 23)

$N_{q(2)} = e^{\pi \tan 35} \cdot \tan^2\left(45 + \frac{35}{2}\right) = 9.02 \times 3.69 = 33.29$

$N_{\gamma(2)} = (N_q - 1)\tan(1.4\phi) = (33.29 - 1)\tan(1.4 \times 35°)$

$= 32.29 \times 1.15 = 37.1$

$N_{c(2)} = (N_q - 1)\cot\phi = 32.29 \cot 35° = 46.1$

$H = 25'$, $H_f = B' = 96.8$, $H/H_f = 25/96.8 = 0.26$

$q_{u(b')} = \gamma_2 \cdot D_f \cdot N_{q(2)} \cdot S_q \cdot d_q \cdot i_q + \frac{1}{2}\gamma_2 \cdot B' N_{\gamma(2)} \cancel{S_\gamma \cdot d_\gamma \cdot i_\gamma}$ 0 (Since $i_\gamma = 0$)

$S_q = 1 + \frac{B'}{L'} \cdot \tan\phi' = 1 + 0.38 \tan 35° = 1.27$

$d_q = 1 + 2\tan\phi(1 - \sin\phi)^2 \cdot D_f/B' = 1 + 2\tan 35°(1 - \sin 35)^2 \cdot 5/96.8$

$= 1 + 2 \times 0.700(0.426)^2 \times 5/96.8 = 1.01$

$i_q = 0.34$ - Pg 24, $i_\gamma = 0$ - Pg 24

$q_{u'(B')} = 125 \times 5 \times 33.29 \times 1.27 \times 1.01 \times 0.34 = 9074$ PSF or 9.07 KSF

$q_{ULT} = 3.08 + [9.07 - 3.08](1 - 25/96.8)^2 = 3.08 + 5.99 \times 0.55$
$= 6.37$ KSF.

$q_{ALL} = 6.37/1.1 = 5.79$ KSF > 3.02 (= $q_{ACT.}$ FROM Pg 24)

HENCE O.K.

LOAD CASE III B : DYNAMIC UPLIFT & HORIZONTAL DYNAMIC

THIS CASE ANALYZED WITH 40% DYNAMIC UPLIFT COMBINED WITH 100% DYNAMIC HORIZONTAL IN Z-DIRECTION & 40% IN X-DIRECTION.

$q_{u(t')} = 2.32$ KSF, $q_{ACTUAL} = 2.82$ KSF [Pg. 27]

$B' = 84.4'$, $L' = 252.2'$, $B'/L' = 0.33$ [Pg 27]

$N_{q(2)} = 33.3$, $N_{\gamma(2)} = 37.1$

$H = 25'$, $H_f = B' = 84.4'$, $H/H_f = 25/84.4 = 0.30$

$q_{u(b')} = \gamma_2 D_f N_{q(2)} \cdot S_q \cdot d_q \cdot i_q + \frac{1}{2}\gamma_2 \cdot B' \cancel{N_{\gamma(2)}} S_\gamma \cdot d_\gamma \cdot i_\gamma$ (Since $i_\gamma = 0$ (Pg 27))

$S_q = 1 + \frac{B'}{L'} \cdot \tan\phi = 1 + 0.33 \tan 35^\circ = 1.23$

$d_q = 1 + 2\tan\phi (1 - \sin\phi)^2 \cdot D_f/B' = 1 + 2\tan 35^\circ (1 - \sin 35)^2 \cdot 5/84.4$

$= 1 + 2 \times 0.700 \times (0.426)^2 \cdot 5/84.4 = 1.02$

$i_q = 0.26$, $i_\gamma = 0$ (Pg 27)

$q_{u(b')} = 125 \times 5 \times 33.3 \times 1.23 \times 1.02 \times 0.26 + 0$

$= 6789$ PSF $= 6.79$ KSF

$q_{ULT} = 2.32 + [6.79 - 2.32](1 - 25/84.4)^2$

$= 2.32 + 4.47 \times 0.495 = 4.53$ KSF

$q_{ALL} = 4.53/1.1 = 4.12$ KSF $>$ 2.82 KSF (q_{ACTUAL})

HENCE O.K.

STONE & WEBSTER ENGINEERING CORPORATION

CALCULATION SHEET

Rev. 0

▲ 5010.65

CALCULATION IDENTIFICATION NUMBER				
J.O. OR W.O. NO.	DIVISION & GROUP	CALCULATION NO.	OPTIONAL TASK CODE	PAGE 34
05996.02	G(c)	13	—	

SUMMARY OF ANALYSIS

LOAD CASE	LOAD COMBINATION	DRAINED ANALYSIS σACT KSF	DRAINED ANALYSIS σALL KSF	DRAINED ANALYSIS DISPOSITION	UNDRAINED ANALYSIS σACT KSF	UNDRAINED ANALYSIS σALL KSF	UNDRAINED ANALYSIS DISPOSITION
ALL FAILURE SURFACE IN LAYER 1, 100% SEISMIC LOADS IN ALL DIRECTIONS							
I	STATIC ONLY	1.86	27.5	PASS	1.86	4.3	PASS
II	STATIC + HORIZONTAL SEISMIC	3.38	2.85	FAIL	3.38	3.9	PASS
III	STATIC + SEISMIC UPLIFT & HORIZ.	4.34	1.03	FAIL	4.34	1.45	FAIL
IV	STATIC + SEISMIC DOWN & HORIZ.	4.05	4.70	PASS	4.05	5.20	PASS
ALL FAILURE SURFACE IN LAYER 1, 100% SEISMIC IN ONE & 40% SEISMIC IN OTHER DIRECTIONS							
II	STATIC + HORIZONTAL SEISMIC (100% IN Z, 40% IN X-DIRECT.)	3.62	2.8	FAIL	ANALYSIS NOT REQUIRED		
IIIA	STATIC + 100% SEISMIC UPLIFT + 40% SEISMIC IN X & Z-DIRECT.	1.47	3.6	PASS	1.47	4.9	PASS
IIIB	STATIC + 40% SEISMIC UPLIFT + 100% IN Z, 40% IN X-DIR.	2.82	2.1	FAIL	2.82	2.9	PASS
FAILURE IN LAYERED SOIL, 100% SEISMIC IN ONE & 40% IN OTHER DIRECTIONS							
II	STATIC + HORIZONTAL SEISMIC (100% IN Z & 40% IN X-DIRECT.)	3.02	5.79	PASS	ANALYSIS NOT REQUIRED		
IIIB	STATIC + 40% SEISMIC UPLIFT, 100% IN Z, 40% IN X-DIRECT.	2.82	4.12	PASS			

VALUES OBTAINED FROM PAGES 17, 22, 30, 32, 33

CALCULATION IDENTIFICATION NUMBER				
J.O. OR W.O. NO.	DIVISION & GROUP	CALCULATION NO.	OPTIONAL TASK CODE	PAGE 34
05996.02	G(C)	13	—	

UNDRAINED ANALYSIS FOR THE UPPER STRATUM (1) (LAYER 1)

FOR FOLLOWING LOAD CASE III: DYNAMIC UPLIFT & HORIZONTAL DYNAMIC

USE 100% OF DYNAMIC LOADING IN EACH OF X, Y, Z DIRECTIONS (A CONSERVATIVE ASSUMPTION).

C = 2200 PSF (LAYER 1)

$q_u(t')$ = 1596 PSF (GROSS)] - PAGE 20 OF CALC.

$q_u(t')$ FOR THIS CASE IS HIGHER THAN $q_u(t')$ (= 1133 PSF PG 33) FOR THIS LOAD CASE FOR ~~DRAINED~~ ANALYSIS, THE RESULTING q_{ult} WILL ALSO BE HIGHER BY COMPARISON.

(1) TOTAL STRESS (UNDRAINED) PARAMETERS ARE USED FOR LAYER 1 AND EFFECTIVE STRESS PARAMETERS ARE USED FOR LAYER 2.

STONE & WEBSTER ENGINEERING CORPORATION

CALCULATION SHEET

Rev. 0

▲ 5010.65

CALCULATION IDENTIFICATION NUMBER				
J.O. OR W.O. NO.	DIVISION & GROUP	CALCULATION NO.	OPTIONAL TASK CODE	PAGE 35
05996.02	G(C)	13	–	

CONCLUSION

THE MAT HAS ADEQUATE ALLOWABLE BEARING CAPACITY TO SUPPORT BEARING PRESSURES RESULTING FROM ALL COMBINATIONS OF STATIC & SEISMIC LOADING CONDITIONS

CALCULATION IDENTIFICATION NUMBER				
J.O. OR W.O. NO.	DIVISION & GROUP	CALCULATION NO.	OPTIONAL TASK CODE	PAGE 36
05996.02	G(C)	13	-	

REFERENCES

1. SWEC DWG 05996.01-EM-1, "CANISTER TRANSFER BUILDING, GENERAL ARRANGEMENT SHEET 1", STONE & WEBSTER, DENVER, CO. (Rev. d)

2. SWEC DWG. 05996.01-EM-2, "CANISTER TRANSFER BUILDING, GENERAL ARRANGEMENT, SHEET 3," STONE & WEBSTER, DENVER, CO. (Rev d)

3. SWEC CALC. NO. 05996.02-SC-5, "SEISMIC ANALYSIS OF CANISTER TRANSFER BUILDING," STONE & WEBSTER, CHERRY HILL, N.J. (REV 0)

4. SWEC. CALC. NO 05996.01-G(B)-04-2, "STORAGE ANALYSIS OF STORAGE PADS," STONE & WEBSTER, BOSTON, MA. (REV. 0)

5. ASCE STANDARD FOR, "SEISMIC ANALYSIS OF SAFETY RELATED NUCLEAR STRUCTURES," APRIL 1986, AND COMMENTARY DATED SEPT. 1986

6. DAS, BRAJA M., "PRINCIPLES OF GEOTECHNICAL ENGINEERING," THIRD EDITION, PWS PUBLISHING COMPANY, BOSTON.

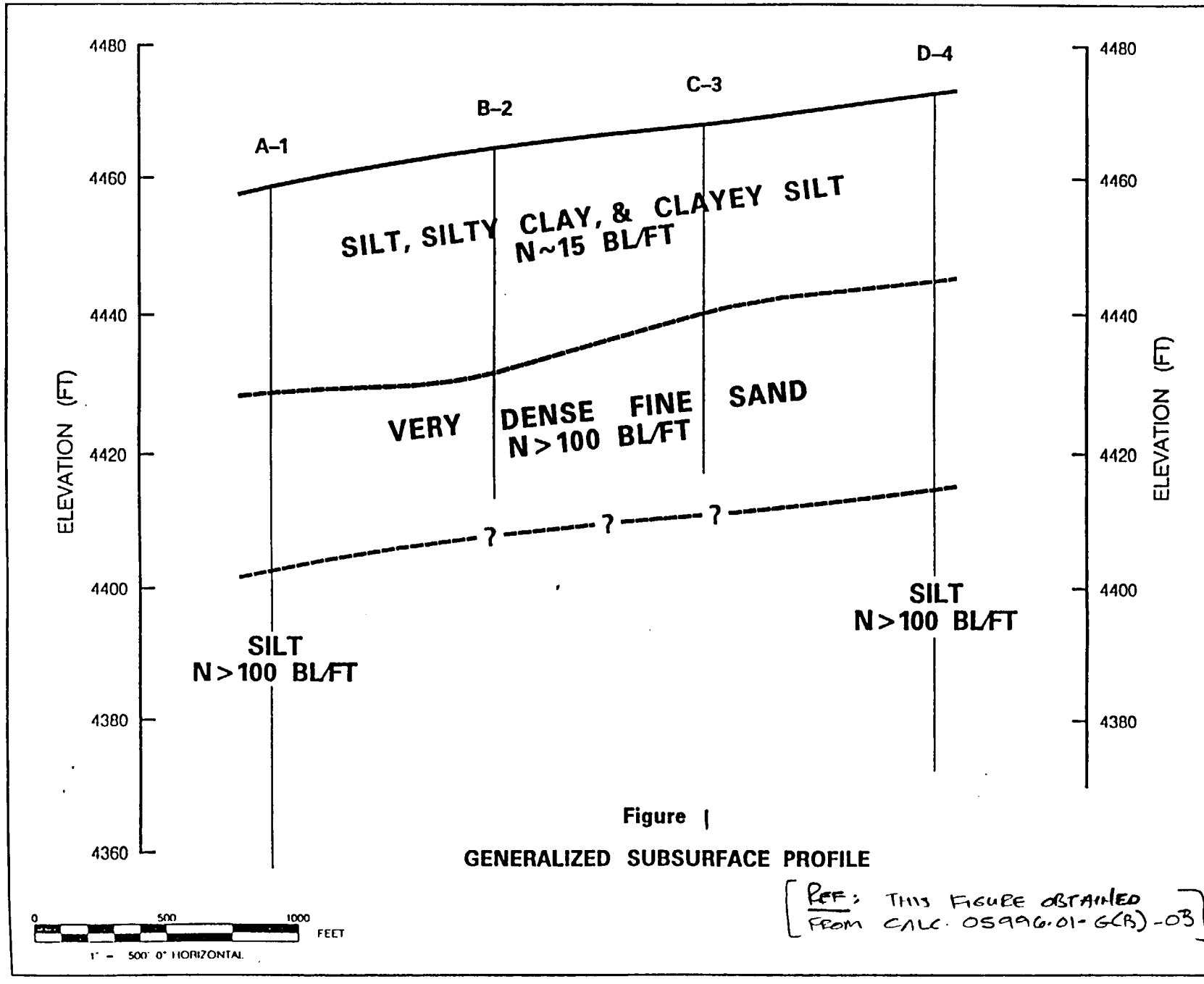

Figure 1

GENERALIZED SUBSURFACE PROFILE

[REF: THIS FIGURE OBTAINED FROM CALC. 05996.01-G(B)-03]

STONE & WEBSTER ENGINEERING CORPORATION

CALCULATION SHEET

CALCULATION IDENTIFICATION NUMBER			
J.O. OR W.O. NO.	DIVISION & GROUP	CALCULATION NO.	OPTIONAL TASK CODE
05996.02	G(B) (C)	13	-

PAGE 37

REV. 0