STONE & WEBSTER ENGINEERING CORPORATION

CALCULATION TITLE PAGE

*SEE INSTRUCTIONS ON REVERSE SIDE

▲ 5010.64 (FRONT)

CLIENT & PROJECT	PAGE 1 OF 54 + 1A, 2A, 3A + ATT A & B (9 pp)
PRIVATE FUEL STORAGE, LLC - PRIVATE FUEL STORAGE FACILITY	
CALCULATION TITLE (Indicative of the Objective): STABILITY ANALYSES OF STORAGE PADS	QA CATEGORY (✓) ☑ I - NUCLEAR SAFETY RELATED ☐ II ☐ III ☐ OTHER

CALCULATION IDENTIFICATION NUMBER

J. O. OR W.O. NO.	DIVISION & GROUP	CURRENT CALC. NO.	OPTIONAL TASK CODE	OPTIONAL WORK PACKAGE NO.
05996.01	G(B)	04		119

* APPROVALS - SIGNATURE & DATE: PREPARER(S)/DATE(S)	REVIEWER(S)/DATE(S)	INDEPENDENT REVIEWER(S)/DATE(S)	REV. NO. OR NEW CALC NO.	SUPERSEDES * CALC. NO. OR REV. NO.	CONFIRMATION * REQUIRED (✓) YES	NO
TE SPONSELLER 2-18-97 Tom Sponseller PJ TRUDEAU 2-24-97 Paul J. Trudeau	PAUL J. TRUDEAU 2-24-97 Paul J. Trudeau TE SPONSELLER 2-24-97 Tom Sponseller	NURI T. GEORGES 2-27-97 Nuri T. Georges	0		✓	
T.E. SPONSELLER 4/30/97 Tom Sponseller PAUL J. TRUDEAU 4/30/97 Paul J. Trudeau	PAUL J. TRUDEAU 4/30/97 Paul J. Trudeau TE SPONSELLER 4/30/97 Tom Sponseller	Alan F Brown 5/8/97 Alan Brown	1	0		✓
PAUL J. TRUDEAU 6/20/97 Paul J. Trudeau	NURI T. GEORGES 6/20/97 Nuri T. Georges	Alan F Brown 6/20/97 Alan Brown by NTG	2	1		✓

CONTINUED ON p 1A

DISTRIBUTION *

GROUP	NAME & LOCATION	COPY SENT (✓)	GROUP	NAME & LOCATION	COPY SENT (✓)
RECORDS MGT. FILES (OR FIRE FILE IF NONE)	ORIG (Boston)	✓			
	COPY R4.2	✓			
	FIRE FILE	✓			

9707300129 970714
PDR ADOCK 07200022
B PDR

STONE & WEBSTER ENGINEERING CORPORATION

CALCULATION TITLE PAGE

*SEE INSTRUCTIONS ON REVERSE SIDE

▲ 5010 64 (FRONT)

CLIENT & PROJECT	PAGE 1A OF 54 + 2A, 3A + ATT A & B (9 pp)
PRIVATE FUEL STORAGE, LLC - PRIVATE FUEL STORAGE FACILITY	
CALCULATION TITLE (Indicative of the Objective): STABILITY ANALYSES OF STORAGE PADS	QA CATEGORY (✓) ☑ I - NUCLEAR SAFETY RELATED ☐ II ☐ III ☐ _____ OTHER

CALCULATION IDENTIFICATION NUMBER				OPTIONAL WORK PACKAGE NO.
J. O. OR W.O. NO.	DIVISION & GROUP	CURRENT CALC. NO.	OPTIONAL TASK CODE	
05996.01	G(B)	04		

* APPROVALS - SIGNATURE & DATE			REV. NO. OR NEW CALC NO.	SUPERSEDES * CALC. NO. OR REV. NO.	CONFIRMATION * REQUIRED (✓)	
PREPARER(S)/DATE(S)	REVIEWER(S)/DATE(S)	INDEPENDENT REVIEWER(S)/DATE(S)			YES	NO
CONTINUED FROM PAGE 1						
PAUL J. TRUDGEN 6/27/97 Paul J. Trudgen	LP SINGH 7-1-97	LP SINGH 7-1-97	3	2		✓

DISTRIBUTION *

GROUP	NAME & LOCATION	COPY SENT (✓)	GROUP	NAME & LOCATION	COPY SENT (✓)
RECORDS MGT. FILES (OR FIRE FILE IF NONE)					

STONE & WEBSTER ENGINEERING CORPORATION

CALCULATION SHEET

NOTED APR 3 - 1997 T. E. Spencelier

CKD 4-30-97

CALCULATION IDENTIFICATION NUMBER				
J.O. OR W.O. NO.	DIVISION & GROUP	CALCULATION NO.	OPTIONAL TASK CODE	PAGE 2
65S:6.01	G(B)	04-3		

TABLE OF CONTENTS

Title Page	1, 1A
Table of Contents	2
LISTING OF ATTACHMENTS	2A
Reasons for Revision 1, 2, 3	3, 3A
Objective	4
Data/Assumptions	4
Footing Plan & Profile	6
Detail of Footing Configurations	7
Geotechnical Properties	8
Static Bearing Capacity-Total Stress Analysis	9
Static Bearing Capacity-Effective Stress Analysis	10
Seismic Analysis Case 1- Sliding	11-14
Seismic Analysis Case 2- Bearing Capacity (w/ EQ_v & EQ_h)	15-~~18~~ 17
Seismic Analysis Case 3- Bearing Capacity (w/ EQ_h)	~~19-21~~ 18-19
Conclusions	~~22~~ 48
TABLES	50-52
Triaxial Test Results - FIG'S 1 & 2	~~23-24~~ 53-54
References	~~25~~ 49
DYNAMIC BEARING CAPACITY OF PAD: 2-CASK CASE	20-27
" " " " " 4- " "	
" " " " " 8- " "	
" " " " " : SUMMARY	46-47

STONE & WEBSTER ENGINEERING CORPORATION

CALCULATION SHEET

▲5010.65

CALCULATION IDENTIFICATION NUMBER				PAGE 2A
J.O. OR W.O. NO. 05996.01	DIVISION & GROUP G(B)	CALCULATION NO. 04 - 3	OPTIONAL TASK CODE	

LISTING OF ATTACHMENTS

ATTACHMENT		# PAGES
A	TELCON 6-19-97 BETWEEN SMMACIE & WTSENG AND PJTRUDEAU	1
B	pp 174 - 181 OF ICEC CALC SC(P017)-1 REV 0 "STORAGE PAD ANALYSIS AND DESIGN"	8 pp. △3

NOTED APR 3 1997 T. E. Spenseller

▲ 5010.65

CKD 4-30-97 P.J.T.	CALCULATION IDENTIFICATION NUMBER			PAGE 3
J.O. OR W.O. NO.	DIVISION & GROUP	CALCULATION NO.	OPTIONAL TASK CODE	
C5996.01	G(B)	04-1		

REASONS FOR REV. 1

Revision 1 of the calculation "Stability Analyses of Storage Pads" was prepared to incorporate the following:

- Revised cask weights & dimensions
- Revised earthquake accelerations
- Determine q_{all} as a function of the coefficient of friction between casks and pad

NOTED JUN 20 1997 P. I. Trudeau

▲ 5010.65

CALCULATION IDENTIFICATION NUMBER				PAGE 3A
J.O. OR W.O. NO. 05996.01	DIVISION & GROUP G(B)	CALCULATION NO. 04-3	OPTIONAL TASK CODE	

REASON FOR REV 2

TO ADD DETERMINATION OF DYNAMIC BEARING CAPACITY OF THE PAD FOR THE LOADS & LOADING CASES BEING ANALYZED BY THE PAD DESIGNER. THESE INCLUDE THE 2-CASK, 4-CASK, & 8-CASK CASES. SEE ATTACHMENT A FOR BACKGROUND INFORMATION, AS WELL AS BEARING PRESSURES FOR THE 2-CASK LOADING.

REASON FOR REV 3

THE BEARING PRESSURES AND THE HORIZONTAL FORCES DUE TO THE DESIGN EARTHQUAKE FOR THE 2-CASK CASE THAT ARE DESCRIBED IN ATTACHMENT A ARE SUPERSEDED BY THOSE INCLUDED IN ATTACHMENT B. REV 3 ALSO ADDS THE CALCULATION OF THE DYNAMIC BEARING CAPACITY OF THE PAD FOR THE 4-CASK & 8-CASK CASES & REVISES THE CASK WEIGHT TO 356.5K, WHICH IS BASED ON HOLTEC HI-STORM OVERPACK WITH LOADED MPC-32 (HEAVIEST ASSEMBLY WT SHOWN ON TABLE 3.2.1 OF HI-STORM TSAR, REPORT HI-951312 REV 1 - PC3 CALC 05996.01-G(B)-05-0).

:TED APR 3 1997 T. E. Spuseller

▲ 5010 65

CKD 4-30-97 PJT.	CALCULATION IDENTIFICATION NUMBER			PAGE 4
J.O. OR W.O. NO. 05996.01	DIVISION & GROUP 6(B)	CALCULATION NO. 04-3	OPTIONAL TASK CODE	

OBJECTIVE

EVALUATE THE STATIC & SEISMIC STABILITY OF THE STORAGE PAD FOUNDATIONS @ THE PROPOSED SITE.

ASSUMPTIONS / DATA

THE ARRANGEMENT OF THE STORAGE PADS IS SHOWN ON SWEC DRAWING 0599601-E4-2-B. THE SPACING OF THE PADS IN THE N-S DIRECTION IS SUCH THAT EACH N-S COLUMN OF FOOTINGS MAY BE TREATED AS ONE LONG STRIP FOOTING WITH B/L ≈ 0 & B = 30'.

THE E-W SPACING OF THE PADS IS GREAT ENOUGH THAT ADJACENT FOOTINGS WON'T SIGNIFICANTLY IMPACT THE BEARING CAPACITY OF ONE ANOTHER, AS SHOWN ON "FOOTING PLAN & PROFILE".

THE CRITICAL LOCATION OF THE SOIL PROFILE FROM A BEARING CAPACITY PERSPECTIVE IS THE TOP LAYER, 0'-30'. THE GEOTECHNICAL PROPERTIES OF THIS LAYER ONLY ARE USED IN THE BEARING CAPACITY CALCULATION, EXCEPT FOR THE USE OF THE UNIT WEIGHT OF THE CRUSHED STONE TO CALCULATE THE OVERBURDEN PRESSURE, q. THE SOIL PROFILE IS SHOWN ON PAGE 6.

THE SOIL PROPERTIES FOR LAYER 1 AND THE CRUSHED STONE ARE GIVEN ON PAGE 8. UU TRIAXIAL TEST RESULTS ARE PRESENTED IN FIGURES 1 & 2.

FOR THE SEISMIC FOUNDATION ANALYSIS, A HORIZONTAL PEAK GROUND ACCELERATION OF 0.67g IS ASSUMED & A VERTICAL PEAK GROUND ACCELERATION OF 0.69 g IS ASSUMED. THESE ACCELERATIONS ARE BASED ON TABLE 4-1 OF PESF REPORT 05996.01-G(POS)-1 REV 0 BY GEOMATRIX AND LETTIS (1997).

THE FOLLOWING WORST-CASE SCENARIOS FOR SEISMIC LOADING ARE EVALUATED:

CASE 1.

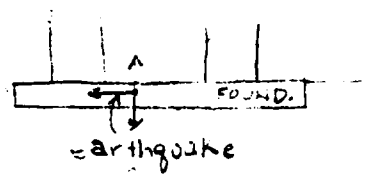

ANALYZE SLIDING POTENTIAL ONLY (BEARING CAPACITY IS MORE CRITICAL WHEN EARTHQUAKE FORCE ACTS DOWNWARD)

CASE 2.

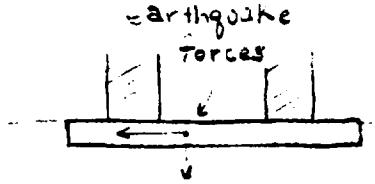

ANALYZE BEARING CAPACITY & FS AGAINST OVERTURNING DUE TO DESIGN EARTHQUAKE

ONLY TOTAL STRESS SEISMIC ANALYSES ARE CONSIDERED, DUE TO SHORT TERM LOADING NATURE OF AN EARTHQUAKE.

CASE 3.

ANALYZE BEARING CAPACITY & F.S. AGAINST OVERTURNING DUE TO DESIGN EARTHQUAKE

PAGE 9 OF CALC 05996.01-G(B)-05 REV 0 INDICATES THE FACTOR OF SAFETY AGAINST A BEARING CAPACITY FAILURE MUST BE > 3 FOR STATIC LOADS & > 1.1 FOR STATIC LOADS + DYNAMIC LOADS DUE TO THE DESIGN EARTHQUAKE. IT ALSO INDICATES THE FACTOR OF SAFETY AGAINST OVERTURNING & SLIDING MUST BE > 1.5 FOR STATIC & > 1.1 FOR STATIC + DYNAMIC DUE TO THE DESIGN EARTHQUAKE. 3

'OTED APR 3 1997 T. E. Spenseller

STONE & WEBSTER ENGINEERING CORPORATION

CALCULATION SHEET

▲ 5010.65

CKD 4-30-97	CALCULATION IDENTIFICATION NUMBER			PAGE 6
J.O. OR W.O. NO.	DIVISION & GROUP	CALCULATION NO.	OPTIONAL TASK CODE	
05996.01	G(3)	04 - 3		

FOOTING PLAN & PROFILE

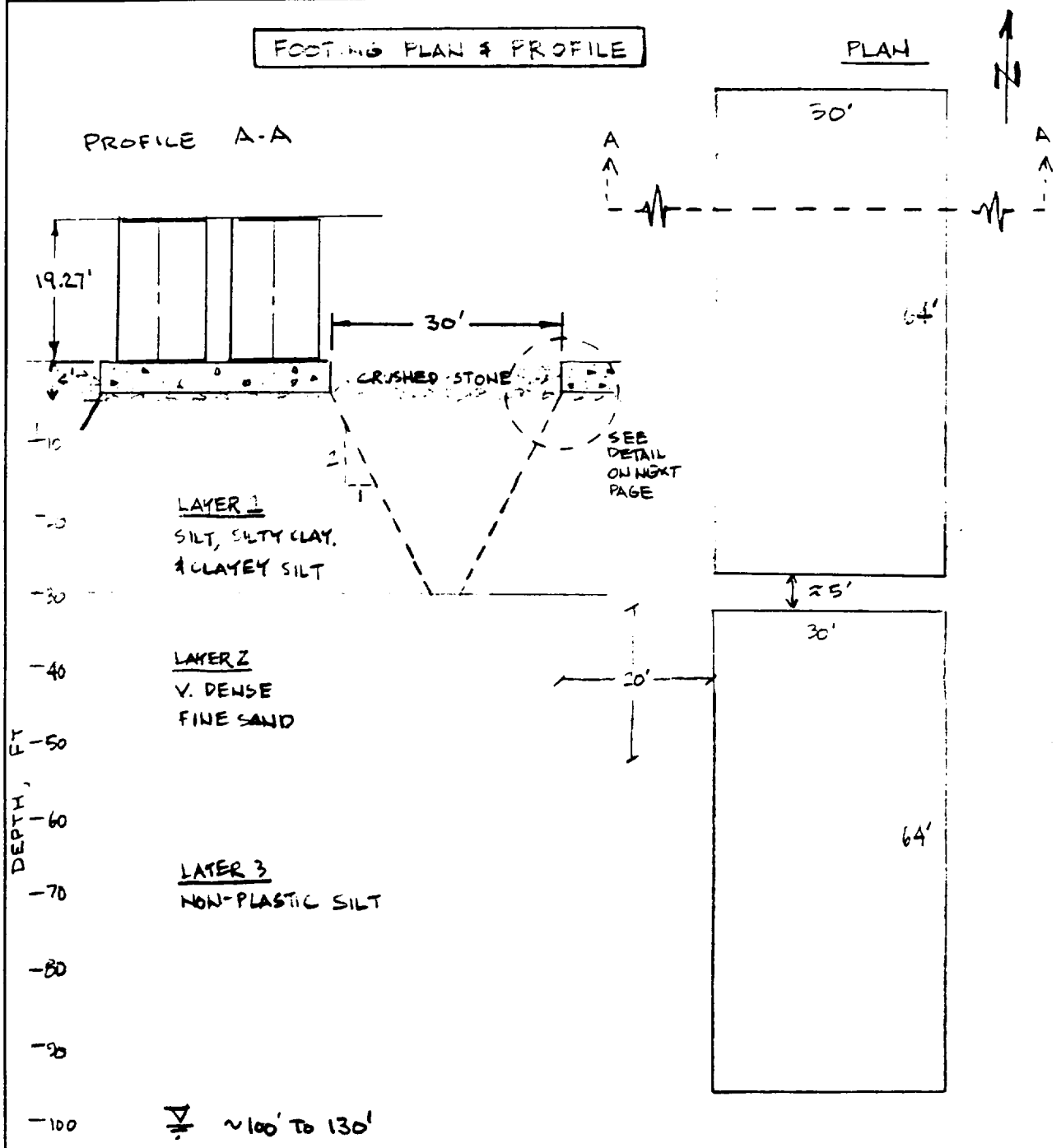

NOTE: PLAN VIEW OF PAD FROM SWEC DRWG 0599601-EY-2E

CASK DETAILS FROM ATT C OF CALC 05996.01-G(B)-05-0.

STONE & WEBSTER ENGINEERING CORPORATION

CALCULATION SHEET

CTED APR 3 1997 T. E. Spanseller

CKD 4-30-97	CALCULATION IDENTIFICATION NUMBER			PAGE 7
J.O. OR W.O. NO. 05996.01	DIVISION & GROUP G(B)	CALCULATION NO. 04-3	OPTIONAL TASK CODE	

DETAIL OF FOOTING CONFIGURATIONS

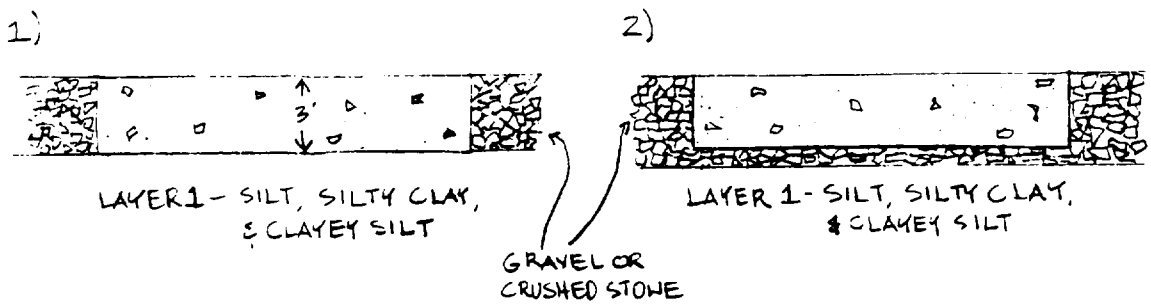

FOOTING LOAD / PRESSURE

TOTAL LOAD:

8 CASKS @ 356.5 K = 2852 K

30' × 64' × 3' × 0.15 K/ft³ = 864 K

∴ TOTAL LOAD = 3716 K

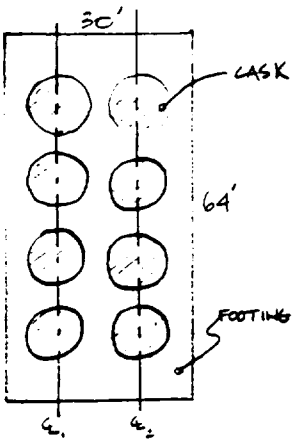

PLAN VIEW OF FOOTING

BEARING PRESSURE:

P_{actual} = LOAD/AREA

P_{actual} = 3716 K / 30' × 64'

P_{actual} = 1.94 KSF

CASK WT = 356.5 K = HEAVIEST ASSEMBLY WT SHOWN ON HI-STORM TSAR TABLE 3.2.1 (OVERPACK W/ FULLY LOADED MPC-32) - SEE p. C3 OF CALC 05996.01-G(B)-05-0 FOR COPY.

JTED APR 3 1997 T. E. Spouseller
▲ 5010.65

CKD 4-30-97 P.J.V.	CALCULATION IDENTIFICATION NUMBER			PAGE 8
J.O. OR W.O. NO.	DIVISION & GROUP	CALCULATION NO.	OPTIONAL TASK CODE	
05996.01	G(B)	04-3		

GEOTECHNICAL PROPERTIES

LAYER 1

BASED ON THE U.U. TEST RESULTS, THE AVERAGE N-VALUES, AND UNIT WEIGHT MEASUREMENTS IN LAYER 1, THE FOLLOWING PROPERTIES ARE ASSUMED FOR THE BEARING CAPACITY ANALYSIS:

γ_{moist} = 80 pcf

TOTAL STRESS PARAMETERS:
- c_u = 2,200 psf — SEE FIGURES 1 & 2
- ϕ_u = 0°

EFFECTIVE STRESS PARAMETERS:
- $\bar{c}$ = 0 psf, AS A CONSERVATIVE ASSUMPTION, ALTHOUGH THERE MAY BE SOME CEMENTATION
- $\bar{\phi}$ = 30° BASED ON THE PI VALUES (SWEC, 1997a) OF THIS LAYER (5%-23%) USING FIG 18.1 OF TERZAGHI & PECK (1967)

SEE CALC 05996.01-G(B)-05-0 & SWEC (1997a)

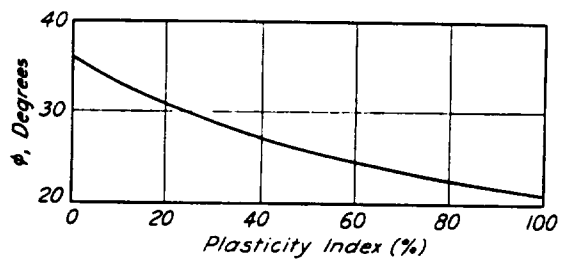

Fig. 18.1. Relation between φ and plasticity index for clays of moderate to low sensitivity under drained conditions.

(TERZAGHI & PECK, 1967)

CRUSHED STONE

$\tan(\phi)$ = 0.80, FRICTION COEFFICIENT WITH MASS CONCRETE (ASSUME ϕ = 40°)

γ_{moist} = 125 pcf (ASSUMED VALUE IS LOWER THAN EXPECTED TO BE CONSERVATIVE)

STATIC BEARING CAPACITY - TOTAL STRESS ANALYSIS

q_{ult} = Ultimate Bearing Capacity

$$q_{ult} = cN_c \underbrace{d_c s_c i_c} + \gamma D N_q \underbrace{d_q s_q i_q} + \tfrac{1}{2} \gamma B \cancel{N_\gamma} d_\gamma s_\gamma i_\gamma \quad N_\gamma = 0$$

DEPTH, SHAPE, & INCLINATION FACTORS

$N_c = 5.14$; $N_q = 1$ (DAS, 1990)

$d_c = 1 + 0.4\, D_f/B = 1 + 0.4\, 3/30 = 1.04$

$d_q = 1 + 2\tan\phi\,(1-\sin\phi)^2 = 1.0$

$s_c = s_q = 1.0$ $B/L \approx 0$ considering footing arrangement

$i_c = i_q = 1.0$ since loading is not inclined

$q_{ult} = 2{,}200\,psf \cdot 5.14 \cdot 1.04 \cdot 1.0 \cdot 1.0 + 3' \times 125\,pcf \times 1.0 \times 1.0 \times 1.0 \times 1.0$

$q_{ult} = 12{,}135$ psf

$q_{actual} = 1{,}940$ PSF

$\therefore$ FACTOR OF SAFETY = 12,135 psf / 1,940 PSF = 6.27

$$q_{all} = \frac{q_{ult}}{FS_{REQ'D}} = \frac{12{,}135\ PSF}{3.0} = 4045\ PSF$$

TED APR 3 1997 T. E. Squassetter

▲ 5010.65

CKD 436.97 E.T. CALCULATION IDENTIFICATION NUMBER				PAGE 10
J.O. OR W.O. NO.	DIVISION & GROUP	CALCULATION NO.	OPTIONAL TASK CODE	
OE 996.01	G (B)	04-3		

STATIC BEARING CAPACITY - EFFECTIVE STRESS ANALYSIS

$q_{ult} = \bar{c} N_c s_c d_c + q N_q s_q d_q + \frac{1}{2} \gamma B N_\gamma s_\gamma d_\gamma$

$N_q = e^{\pi \tan \bar{\phi}} \cdot \tan^2(45 + \bar{\phi}/2) = e^{\pi \tan(30)} \cdot \tan^2(45 + 30/2) = 18.4$ EQ 10.32 (REISNER'S EQ)

$N_\gamma = (N_q - 1) \cdot \tan(1.4 \cdot \bar{\phi}) = (17.4) \cdot \tan(1.4 \cdot 30°) = 15.7$ EQ 10.39 (MEYERHOFF'S EQ) (DAS, 1990)

$s_q = 1 + B/L \tan \bar{\phi} = 1$

$s_\gamma = 1 - 0.4 B/L = 1$

← TABLE 10.2 REF 2

$d_q = 1 + 2 \tan \phi (1 - \sin \phi)^2 \cdot D/B = 1 + 2 \cdot \tan(30°)(1 - \sin(30))^2 \cdot 3/30 = 1.03$

$d_\gamma = 1$

$q = 3' \cdot 125 pcf = 375 psf$

$\therefore q_{ult} = 0 + 375 psf \cdot 18.4 \cdot 1.0 \cdot 1.03 + \frac{1}{2} \cdot 80 pcf \cdot 30' \cdot 15.7 \cdot 1.0 \cdot 1.0$

$q_{ult} = 25{,}950 psf$

$q_{actual} = 1{,}940 psf$

$\therefore$ Factor of Safety = 13.4

NOTED APR 3 1997 T. E. Sponsellen
NOTED FEB 21 1997 P. J. Trudeau
▲ 5010.65

STONE & WEBSTER ENGINEERING CORPORATION

CALCULATION SHEET

CKD 4-30-97 [illegible] 4-30-97	CALCULATION IDENTIFICATION NUMBER			PAGE 11
J.O. OR W.O. NO.	DIVISION & GROUP	CALCULATION NO.	OPTIONAL TASK CODE	
05996.01	G(B)	04-1		

SEISMIC SLIDING RESISTANCE ANALYSIS

CASE 1

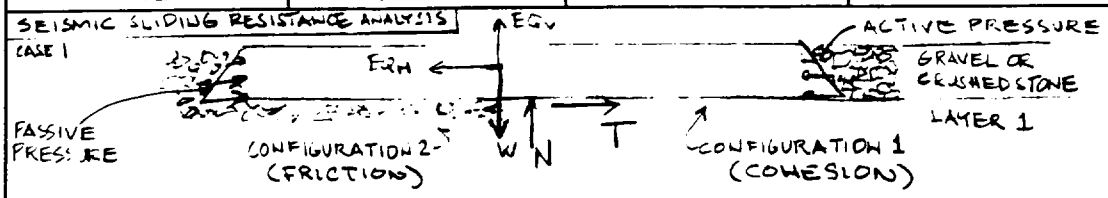

N, T, W = NORMAL FORCE, TANGENT FORCE, & WEIGHT FORCE.

EQ_H = HORIZ. EARTHQUAKE FORCE = 0.67 W

EQ_V = VERT. EARTHQUAKE FORCE = 0.69 W

LATERAL EARTH PRESSURE (APPLICABLE TO BOTH CONFIGURATIONS)

★ ACTIVE EARTH PRESSURES ACTING ON STORAGE PAD ASSUMING CRUSHED STONE BACKFILL

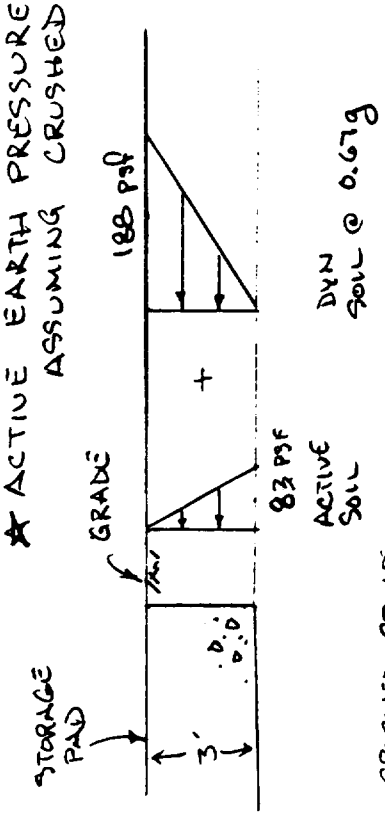

CRUSHED STONE

$\gamma \approx 125$ PCF

$\phi \approx 40°$

$K_a = \frac{1-\sin\phi}{1+\sin\phi} = 0.22$

$p_a = \gamma H K_a = 125 \frac{\#}{FT^3} \times 3\ FT \times 0.22 = 83$ PSF/L.F.

$P_a = \frac{1}{2} p_a H = \frac{83\ PSF}{2} \times 3\ FT = 125\ \#/L.F. \times 64'/STORAGE PAD = 8{,}000\ \#$

DYN EARTH PRESSURE $= \gamma H \Delta K_{AE} = 125 \frac{\#}{FT^3} \times 3\ FT \times \frac{3}{4} \times 0.67 = 188$ PSF/L.F.

$\Delta P_{AE} = \frac{1}{2} \cdot 188 \frac{PSF}{L.F.} \times 3' = 283\ \#/L.F. \times 64'/STORAGE PAD = 18{,}090\ \#$

Σ FORCES ON SLAB DUE TO ACTIVE SOIL PRESSURE + DYNAMIC SOIL PRESSURE $= 26{,}090\ \# = F_A$

Σ 8,000# + 18,090#

NOTE FIG. 13 OF GTG 615-1 (SWEC, 1982) INDICATES $\Delta K_{PE} \approx K_P$ FOR $\bar{\phi} = 40°$ & $\alpha_H > 0.5g$ ∴ IGNORE PASSIVE PRESSURE

NOTED APR 3 1997 T. E. Spaeseller
5010 65

CKD 4-30-97	CALCULATION IDENTIFICATION NUMBER			PAGE 12
J.O. OR W.O. NO. 05996.01	DIVISION & GROUP G(B)	CALCULATION NO. 04 - 3	OPTIONAL TASK CODE	

WEIGHT

CASKS: $W_C = 8 \times 356.5^K/\text{CASK} = 2{,}852\ K$

FOUNDATION: $W_F = 3' \times 64' \times 30' \times 0.15\ \text{KIPS/FT}^3 = 864\ K$

EARTHQUAKE FORCES

$a_h = 0.67g$ & $a_v = 0.69g$ (GEOMATRIX REPORT, FEB 1997)

CASKS:

$EQ_{VC} = -0.69 \times 2852K = -1968\ K$ (− SIGN ⇒ UPWARD FORCE)

$EQ_{HC} = 0.67 \times 2852K = 1911\ K$

FOUNDATION PAD

$EQ_{VF} = -0.69 \times 864K = -596\ K$

$EQ_{HF} = 0.67 \times 864K = 579\ K$

NOTE!!

SINCE THE CASKS ARE MERELY RESTING ON THE FOUNDATION (NOT MECHANICALLY SECURED) THE HORIZONTAL FORCE TRANSMITTED FROM THE CASKS TO THE FOUNDATION WILL BE THE MINIMUM OF:

EQ_{HC} & $(W_C + EQ_{VC})\mu$ WHERE μ = FRICTION COEFFICIENT

NOTE: MINIMUM SLIDING RESISTANCE EXISTS WHEN EQ_{VC} ACTS UPWARD FOR PAD SUPPORTED ON FRICTIONAL MATERIAL (i.e., CONFIGURATION 2)

MAXIMUM DRIVING FORCE EXISTS WHEN EQ_{VC} ACTS DOWNWARD (CRITICAL CASE FOR CONFIGURATION 1)

FACTOR OF SAFETY AGAINST SLIDING

THE FACTOR OF SAFETY AGAINST SLIDING WILL BE CALCULATED AS A FUNCTION OF μ FOR FOUNDATION CONFIGURATIONS 1 & 2

STONE & WEBSTER ENGINEERING CORPORATION

CALCULATION SHEET

TED APR 3 1997 T. E. Spanseller

▲ 5010.65

CKD 4-30-97	CALCULATION IDENTIFICATION NUMBER			PAGE 13
J.O. OR W.O. NO. 05996.01	DIVISION & GROUP G(B)	CALCULATION NO. 04-3	OPTIONAL TASK CODE	

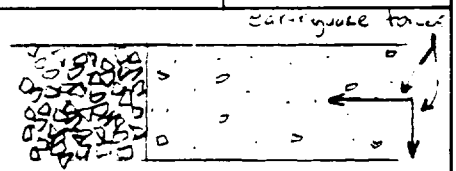

LAYER 1 - SILT, CLAY & SILT, & SILTY CLAY

FOUNDATION CONFIGURATION 1 - CONCRETE POURED DIRECTLY ON LAYER 1

IN THIS CONFIGURATION, THE TANGENT FORCE (T) @ THE BASE OF THE FOOTING = C_u × AREA:

$$T = 2{,}200\,psf \times 30' \times 64' = 4{,}224\ KIPS$$

CONSIDERING SLIDING, THE FACTOR OF SAFETY, FS, IS DEFINED AS:

$$FS = \text{RESISTING FORCES} / \text{DRIVING FORCES}$$

$$\therefore FS = T / [F_A + EQ_{HP} + \text{MINIMUM}(EQ_{HC}, \overbrace{(W_c + EQ_{VC})\mu}^{\text{ALWAYS THE MINIMUM}})]$$

$$F.S. = 4{,}224\,K / [\underset{\text{ACTIVE SOIL PRESS}}{26K} + \underset{\text{PAD}}{579K} + \underbrace{\text{MIN}(EQ_{HC}, (W_c + EQ_{VC})\mu)}_{\text{CASK}}]$$

μ	FS	
0.67	1.68	$= 4{,}224^K \div (26^K + 579^K + 1911)$
0.60	1.68	1911
0.50	1.68	1911
0.40	1.68	1911
0.30	2.06	1446

$EQ_{HC} = 0.67 \times 8\ \text{CASKS} \times 356.5\ \frac{K}{\text{CASK}}$

$= \mu\,(W_c + EQ_{VC})$

$0.3\,(2852^K + 1968^K)$

$= 0.69 \times 8\ \text{CASKS} \times 356.5\ K/\text{CASK}$

FOUNDATION CONFIGURATION 2 - CONCRETE POURED DIRECTLY ON COMPACTED CRUSHED STONE OR GRAVEL

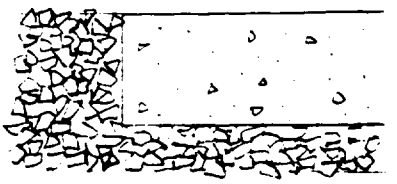

LAYER 1 - SILT, CLAYEY SILT, & SILT CLAY

IN THIS CONFIGURATION, THE TANGENT FORCE (T) @ THE BASE OF THE FOOTING = $N\tan(\phi)$

$N = \Sigma F_v = W_C + W_F + EQ_{VC} + EQ_{VP}$

$= 2852K + 864K + {}^{-}1968K + {}^{-}556K$ (RESISTING FORCE WILL BE MINIMUM WHEN EQ_V ACTS UPWARD)

$\therefore N = 1152K$

$\therefore T = 1152K \cdot \tan\phi = 1152K \cdot 0.84 = 967K$

AGAIN,

FS = RESISTING FORCES / DRIVING FORCES

$\therefore FS = T / [F_A + EQ_{HF} + \text{MINIMUM}(EQ_{HC}, \overbrace{(N_C + EQ_{VC})\mu}^{\text{ALWAYS THE MINIMUM}})$

$FS = 967K / [\underset{\text{SOIL PRESS}}{26K} + \underset{\text{PAD}}{579K} + \underset{\text{CASK}}{(2852K + {}^{-}1968K)\mu}]$ $= 884\mu$

μ	FS	884μ
0.67	0.81	592
0.60	0.85	531
0.50	0.92	442
0.40	1.01	354
0.30	1.11	265

NOTE: $FS_{SLIDING} < 1.1$ IF $\mu > 0.3$ AND PAD IS FOUNDED ON COMPACTED CRUSHED STONE

SEISMIC - CASE 2

CHECK SEISMIC OVERTURNING USING REVISED CASK WEIGHT & $D_f = 3'$

ASSUME MAXIMUM EARTHQUAKE FORCES IN HORIZONTAL (←) & VERTICAL DIRECTIONS (↓)

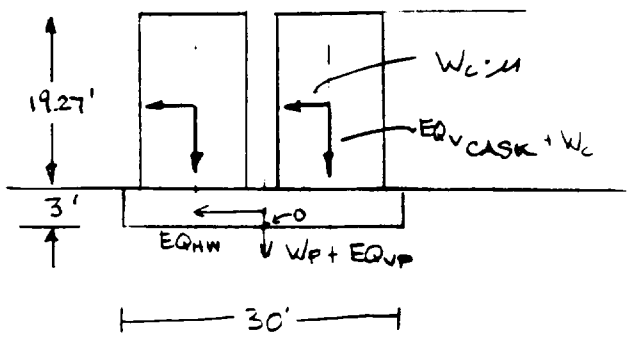

CG OF CASK ABOVE BASE $= 118'' \times \frac{1\ FT}{12\ IN.} = 9.83'$ (p C4 CALC 05996.01-G(B)-05)

CONSIDER CASK EQUILIBRIUM:

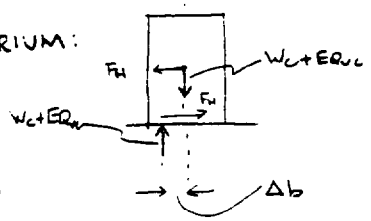

$F_H = \text{MINIMUM}\left(EQ_{HC},\ (W_C + EQ_{VC})\mu\right)$

FOR CASK EQUILIBRIUM, VERT. REACTION ON CASK BASE MUST BE OFFSET FROM ℄ BY Δb

$$\Delta b = 9.83' \times \frac{F_H}{W_C + EQ_{VC}}$$

EXAMPLE CALCULATION, W/ $\mu = 0.40$: $F_H = \text{MIN}(1911\,K, (2852K + 1968K) \times 0.40)$; $F_H = 1911\,K$ $\therefore \Delta b = 3.9'$

$$\Sigma M_o = 1.5' \times EQ_{HP} + 3' \times F_H + 3.9' \times (W_C + EQ_{VC})$$

$$\Sigma M_o = 1.5' \times 579K + 3' \times 1911\,K + 3.9'\ (2852^K + 1968K) = 25{,}387\ K\text{-}FT$$

$B' = B - 2e_B$ WHERE $e_B = M_o / \Sigma F_V$

$$\Sigma F_V = \left[W_C + EQ_{VC} + W_P + EQ_{VP}\right]$$

$$\Sigma F_V = \left[2852K + 1968^K + 864K + 596K\right] = 6280K$$

$$\Rightarrow \quad e_B = \frac{25{,}387\ K\text{-}FT}{6280\ K} = 4.04\ FT$$

$$\therefore \quad B' = B - 2e_B = 30' - 2 \times 4.04\ FT = 21.92\ FT$$

NOTED MAR 1 4 1997 P. J. Trudeau

STONE & WEBSTER ENGINEERING CORPORATION

CALCULATION SHEET

TED APR 3 1997 T. E. Spanseller

▲5010.65 CKD 4-30-97 PJD.

(2) [illegible] 3-20-97

CALCULATION IDENTIFICATION NUMBER				
J.O. OR W.O. NO.	DIVISION & GROUP	CALCULATION NO.	OPTIONAL TASK CODE	PAGE 16
05996.01	G(B)	04 - 3		

SEISMIC CASE 2

ASSUMING HORIZ EARTHQUAKE ACCEL IN DIRECTION OF THE LENGTH OF THE FOOTING COULD EQUAL THOSE IN THE DIRECTION OF THE WIDTH, $e_L = e_B = 4.04$ FT

$$\therefore \quad L' = L - 2e_L = 64' - 2 \times 4.04 \text{ FT} = 55.92 \text{ FT}$$

$$q_{ACTUAL} \approx \frac{F_V}{B' \times L'} = \frac{6280 \text{ K}}{21.92' \times 55.92'} = 5.12 \text{ KSF}$$

$$q_{ult} = c N_c d_c s_c i_c + \gamma D N_q s_q d_q i_q + \frac{1}{2} \gamma B N_\gamma s_\gamma d_\gamma i_\gamma$$

$N_\gamma = 0$

$c = 2200$ PSF $= 2.2$ KSF $\qquad B = 30' \quad L = 64'$

$N_c = 5.14$ TABLE 10.1 DAS (1990) & $N_q = 1.0$

$d_c = 1 + 0.4 \frac{D_f}{B}$ SINCE $\frac{D_f}{B} < 1 \qquad D_f = 3'$

$\therefore \quad d_c = 1 + 0.4 \times \frac{3'}{30'} = 1.04$

$$s_c = 1 + \frac{B}{L} \frac{N_q}{N_c} = 1 + \approx 0 \times \frac{1.0}{5.14} = 1.0$$

$$i_c = \left(1 - \frac{\beta}{90°}\right)^2 \qquad \beta = \tan^{-1} \frac{F_H}{F_V} = \tan^{-1} \frac{(\overset{EQ_{HP}}{579^K} + \overset{EQ_{HC}}{1911^K})}{6280 \text{ K}} = 21.6°$$

(p12)

$$\therefore \quad i_c = \left(1 - \frac{21.6}{90}\right)^2 = 0.58$$

IN GENERAL, $\measuredangle \beta = \tan^{-1} \left(\frac{EQ_{HP} + F_H}{EQ_{VP} + W_P + EQ_{VC} + W_C} \right)$

SEISMIC CASE 2

$$s_\gamma = 1 + \frac{B}{L}\tan\phi \qquad \phi = 0 \qquad \therefore \; s_\gamma = 1.0$$

$$d_\gamma = 1 + 2\tan\phi \cdot (1-\sin\phi)^2 \frac{D_f}{B} \qquad \phi = 0 \qquad \therefore \; d_\gamma = 1.0$$

$$i_\gamma = i_c = 0.58$$

$$\Rightarrow \quad q_{ult_{NET}} = 2.2\ \text{KSF} \times 5.14 \times 1.04 \times 1.0 \times 0.58 + 0.125\ \frac{\text{K}}{\text{FT}^3} \times 3' \times 1.0 \times 1.0 \times 1.0 \times 0.58$$

$$q_{ult} = 6.82\ \text{KSF} + 0.22 = 7.04\ \text{KSF}$$

$$FS = \frac{q_{ult}}{q_{actual}} = \frac{7.04\ \text{KSF}}{5.12\ \text{KSF}} = 1.38$$

FACTORS OF SAFETY FOR OTHER VALUES OF μ ARE GIVEN ON TABLE 1.

NOTED MAR 2 0 1997 P. J. Trudeau

STONE & WEBSTER ENGINEERING CORPORATION

CALCULATION SHEET

NOTED APR 3 1997 T. E. Spanseller

▲5010 65 CK) 4-30-97 PJT.

(4) 4 30	CALCULATION IDENTIFICATION NUMBER			PAGE 18
J.O. OR W.O. NO.	DIVISION & GROUP	CALCULATION NO.	OPTIONAL TASK CODE	
05996.01	G(B)	04-3		

SEISMIC-CASE 3

CHECK OVERTURNING - SEISMIC LOADS WITH $\alpha_H = 0.67g$

& $\alpha_V = 0g$

$$\Sigma F_V = \overset{864\,K}{3' \times 0.15\,KCF \times 30' \times 64'} + \overset{2852}{8\ CASKS \times \frac{356.5\,K}{CASK}} = 3716\ K$$

$$EQ_{HC} = 0.67 \times 2852\,K = 1911\ K$$

$$EQ_{HP} = 0.67 \times 864\,K = 579\ K$$

EXAMPLE CALCULATION, W/ $\mu = 0.30$

μ EQ_{VC}

$0.3 \times 2852K$

$$F_H = MIN\left(EQ_{HC}, (W_C + \overset{0}{EQ_{VC}}) \times \mu\right) = MIN(1911K, 856K) = 856K \quad \therefore \Delta b = 9.83' \times \frac{856\,K}{2852\,K} = 2.95'$$

$$\Sigma M_o = 1.5' \times EQ_{HP} + 3' \times F_H + 2.95' \times W_C$$

$$\Sigma M_o = 1.5' \times 579K + 3' \times 856K + 2.95' \times 2852K = 11{,}849\ K\text{-}FT$$

$$e_B = \frac{\Sigma M_o}{\Sigma F_V} = \frac{11{,}849\ K\text{-}FT}{3716\ K} = 3.19$$

$$B' = 30' - 2e_B = 30' - 2 \times 3.19' = 23.62'$$

$$L' = 64' - 2e_L = 64' - 2 \times 3.19' = 57.62'$$

$$q_{ACTUAL} = \frac{F_V}{B' \times L'} = \frac{3716\ K}{23.62' \times 57.62'} = 2.73\ KSF$$

MAR 20

STONE & WEBSTER ENGINEERING CORPORATION

CALCULATION SHEET

▲5010.65 CKD 4-30-97 [illegible]

⑤ CHKD [illegible] 3-20-97 CALCULATION IDENTIFICATION NUMBER				PAGE 19
J.O. OR W.O. NO. 05996.01	DIVISION & GROUP G(B)	CALCULATION NO. 04-3	OPTIONAL TASK CODE	

SEISMIC - CASE 3

RECALCULATE q_{ULT} W/ NEW INCLINATION FACTOR. W/ $\alpha_V = 0$

$i = (1 - \beta/90)^2 \quad \beta = \tan^{-1}(F_H / \Sigma F_V) = \tan^{-1}\left(\frac{EQ_{HP} + F_H}{3716K}\right) = \tan^{-1}\left(\frac{579K + 356K}{3716K}\right) = 21.1°$

$i = (1 - 21.1°/90)^2 = 0.59$

$$q_{ULT} = \underset{c}{2.2\,KSF} \times \underset{N_c}{5.14} \times \underset{d_c}{1.04} \times \underset{s_c}{1.0} \times \underset{i_c}{0.59} + \underset{\gamma}{0.125\frac{K}{FT^3}} \times \underset{D_f}{3FT} \times \underset{N_q}{1.0} \times \underset{s_q}{1.0} \times \underset{d_q}{1.0} \times \underset{i_q}{0.59}$$

6.94 0.22

$q_{ULT} = 7.16$ KSF

$$\therefore F.S. = \frac{q_{ult}}{q_{act}} = \frac{7.16\ KSF}{2.73\ KSF} = 2.62$$

FACTORS OF SAFETY FOR OTHER VALUES OF μ ARE SHOWN ON TABLE 2.

THE FOLLOWING PAGES WERE ADDED IN REV 3 TO CHECK THE DYNAMIC BEARING CAPACITY OF THE PAD FOR THE SOIL PRESSURES THAT WERE DETERMINED BY THE PAD DESIGNER (ICEC). THESE DYNAMIC LOADS ARE IDENTIFIED IN ICEC CALC 0599661-SC(P017)-1 REV 0 PP 174-181, COPIES INCLUDED IN ATTACHMENT B.

NOTED JUN 19 1997 P. J. Trudeau

STONE & WEBSTER ENGINEERING CORPORATION

CALCULATION SHEET

▲ 5010.65

CALCULATION IDENTIFICATION NUMBER				PAGE 20
J.O. OR W.O. NO.	DIVISION & GROUP	CALCULATION NO.	OPTIONAL TASK CODE	
05996.01	G(B)	04-3		

DYN BEARING CAPACITY OF PAD: 2-CASK CASE

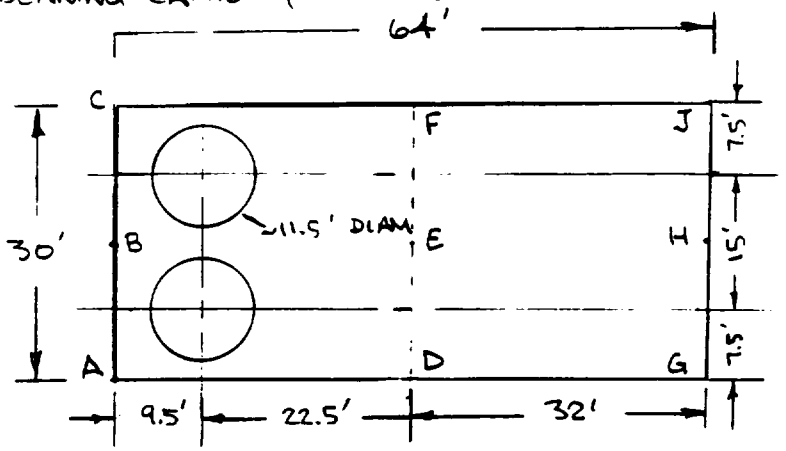

PLAN

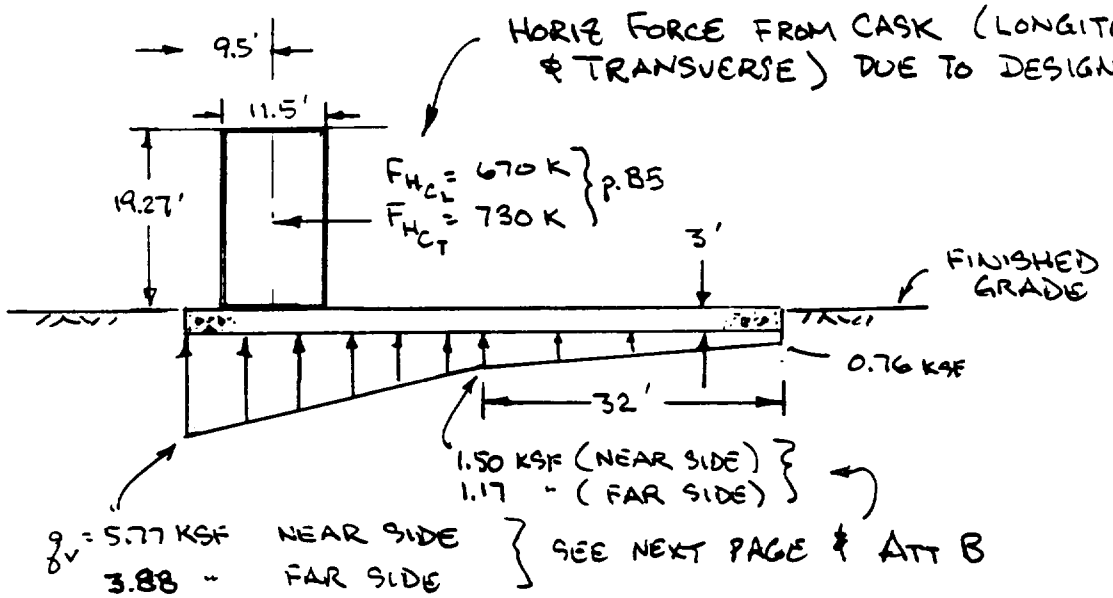

ELEV

* STRESSES AT PAD/SOIL INTERFACE PROVIDED BY WEN TSENG (ICEC) VIA FAX COPY IN ATT B.

DYN BEARING CAPACITY OF PAD: 2-CASK CASE

SOIL BEARING PRESSURES ARE BASED ON INFO FROM ICEC INCLUDED IN ATT B AND ARE SUMMARIZED IN TABLE 3.

VERTICAL PRESSURES INCLUDE: PAD DL = 0.45 KSF, PAD EQ = 0.31 KSF } p B5

CASK LL = 1.67 KSF ALONG LINE AC & IS ASSUMED TO DECREASE LINEARLY TO 0 ALONG LINE DF.

CASK EQ PRESSURES ARE SHOWN ON p B4.

SUMMING THESE VERTICAL PRESSURES RESULTS IN THE FOLLOWING PRESSURE DISTRIBUTION. NOTE LOADING FROM CASKS IS ESSENTIALLY APPLIED TO ONLY 1/2 OF PAD.

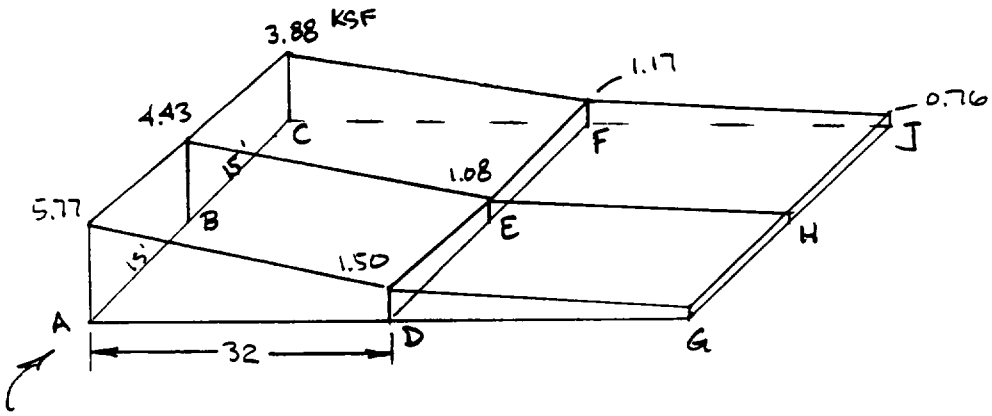

FOR LOADED HALF OF PAD:

$$F_v \simeq \left[\frac{15'}{2} \times \overbrace{(5.77 + 2 \times 4.43 + 3.88)}^{138.83}{}^{KSF} + \frac{15'}{2}\overbrace{(1.50 + 2 \times 1.08 + 1.17)}^{36.23}{}^{KSF}\right] \frac{32'}{2}$$

$F_v \simeq$ 2801 K FOR LOADED 1/2 OF PAD

$$A_{AC} \sim 138.83 \frac{K}{FT} = 30' \times q_{AVG_{AC}} \Rightarrow q_{AVG_{AC}} = 4.63 \text{ KSF}$$

$$A_{DF} \sim 36.23 \frac{K}{FT} = 30\, q_{AVG_{DF}} \Rightarrow q_{AVG_{DF}} = 1.21 \text{ KSF}$$

DYN BEARING CAPACITY OF PAD. 2-CASK CASE

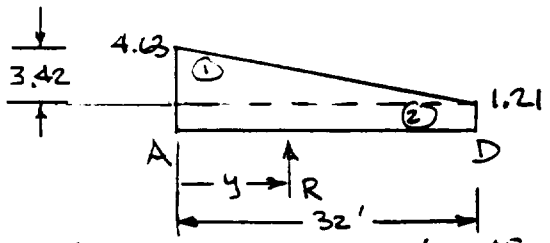

ΣM_A TO FIND LOC'N OF F_V

$$Ry = \frac{1}{2}\, 3.42 \times 32 \times \frac{1}{3} 32 + 1.21 \times 32 \times \frac{32}{2}$$

$$R = \frac{1}{2}\, 3.42 \times 32 + 1.21 \times 32 = 54.7 + 38.7 = 93.4\ K$$

$$y = \frac{583.7 + 619.5\ K\text{-}FT}{93.4\ K} = 12.88\ FT$$

ALONG LINE AC

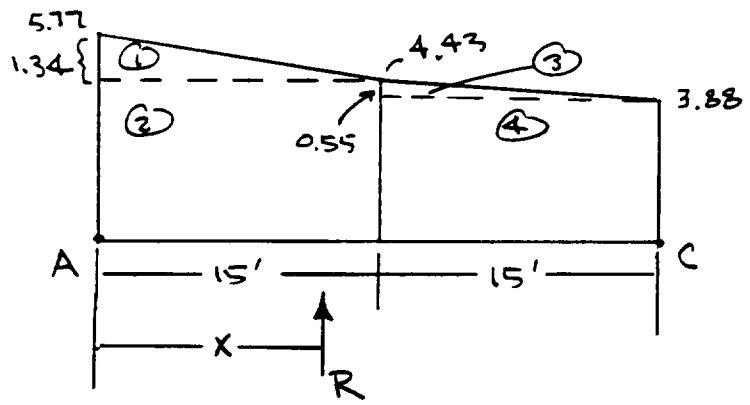

DYN BEARING CAPACITY OF PAD : 2-CASK CASE

ΣM_A

	AREA (K/FT)	MOMENT ARM (FT)	MOMENT K-FT/FT
1	$\frac{1}{2}$ 1.34 KSF × 15' = 10.05	$\frac{1}{3} \cdot 15' = 5'$	50.25
2	4.43 KSF × 15' = 66.45	$\frac{1}{2} \cdot 15' = 7.5'$	498.38
3	$\frac{1}{2}$ 0.55 KSF × 15' = 4.13	$15' + \frac{1}{3} 15 = 20'$	82.5
4	3.88 KSF × 15' = 58.20	$15' + \frac{1}{2} 15' = 22.5'$	1309.5
	$\Sigma F_V = R = 138.8$ K/FT		1940.6

$$\therefore \quad x = \frac{\Sigma M_A}{\Sigma F_V} = \frac{1940.6 \text{ K-FT/FT}}{138.8 \text{ K/FT}} = 13.98' \sim 14.0'$$

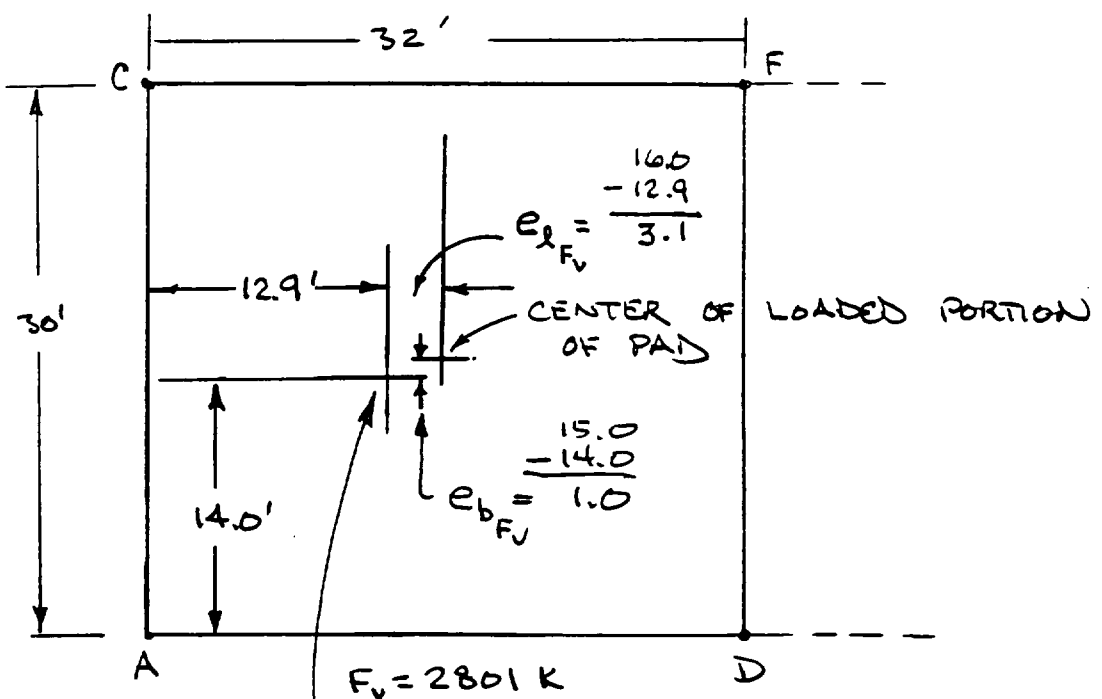

$F_V = 2801$ K

POINT OF APPLICATION OF F_V DUE TO PAD (DL+DE) & CASKS (LL+DE) FOR 2-CASK CASE

STONE & WEBSTER ENGINEERING CORPORATION

CALCULATION SHEET

▲ 5010.65

10	CALCULATION IDENTIFICATION NUMBER			PAGE 24
J.O. OR W.O. NO.	DIVISION & GROUP	CALCULATION NO.	OPTIONAL TASK CODE	
05996.01	G(B)	04 - 3		

DYN BEARING CAPACITY OF PAD: 2-CASK CASE

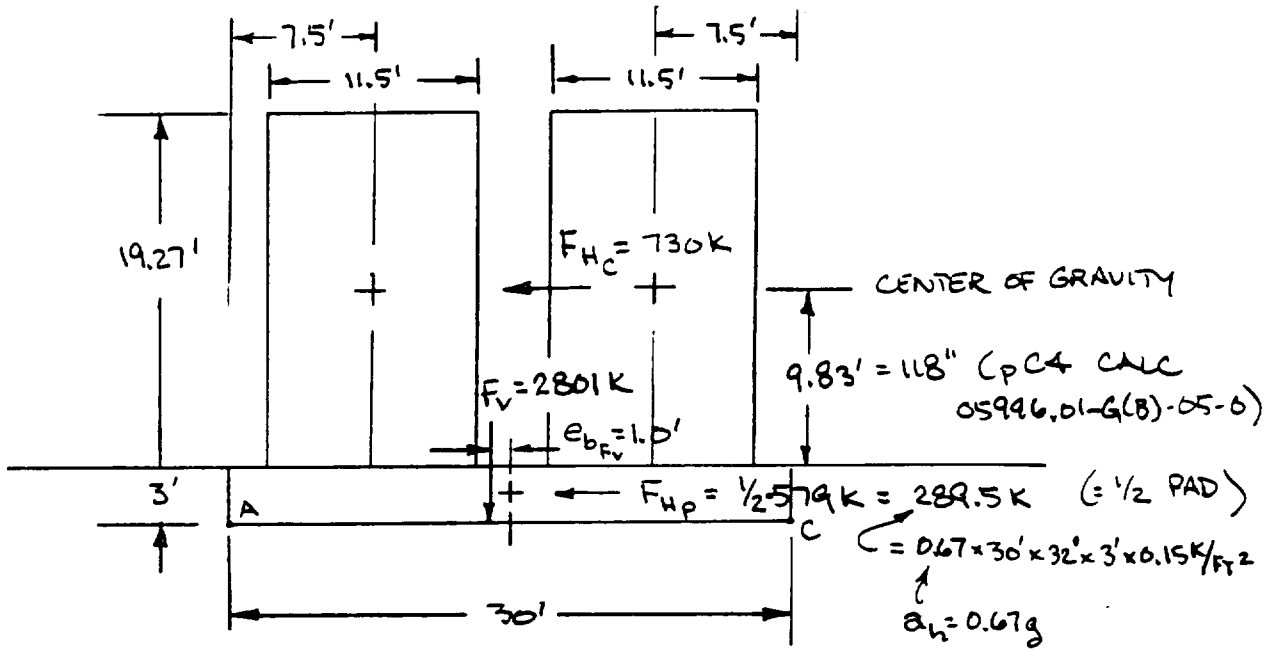

ΣM_{F_V} TO FIND LOC'N OF RESULTANT TO RESIST F_H's

$$R\Delta b = 1.5' \times \frac{579^K}{2} + (3' + 9.83')\ 730\ K$$

1/2 PAD*

2-CASKS TRANSVERSE LOADING

$R = F_V = 2801\ K$

$$\therefore\ \Delta b = \frac{434.25 + 9{,}365.9\ \text{K-FT}}{2801\ K} = 3.50'$$

ADD $e_{b_{F_V}} = 1.0 \Rightarrow e_b = 3.50' + 1.0' = 4.50'$

$$B' = B - 2e_b = 30' - 2 \times 4.5' = 21.0'$$

* ASSUMES HORIZ INERTIA OF OTHER 1/2 OF PAD IS RESISTED BY C = 2.2 KSF ALONG BASE OF THAT 1/2 OF PAD.

DYN BEARING CAPACITY OF PAD: 2-CASK CASE

CALCULATE L' SIMILARLY FOR LONGITUDINAL DIRECTION

$F_{H_{C_L}} = 670\,K$ (p B5)

ΣM_{F_v}

$$R\,\Delta l = \underbrace{1.5' \times \frac{579\,K}{2}}_{1/2\ \text{PAD}} + \underbrace{(3' + 9.83')(670\,K)}_{\text{2-CASKS LONGITUDINAL LOADS}}$$

$R = F_v = 2801\,K$

$$\therefore \Delta l = \frac{434.25\,K\text{-}FT + 8596.1\,K\text{-}FT}{2801\,K} = 3.22\,FT$$

ADD $e_{l_{F_v}} = 3.1 \Rightarrow e_l = 3.22' + 3.1' = 6.32'$

$L' = L - 2e_l = 32' - 2 \times 6.32' = 19.35'$ ← $< 21.0'$ ∴ THIS = B' & L' = 21.0'

$$q_{ACTUAL} = \frac{F_v}{B' \times L'} = \frac{2801\,K}{19.35' \times 21.0'} = 6.89\ KSF$$

DYN BEARING CAPACITY OF PAD: 2-CASK CASE

$$q_{allow} = \frac{q_{ult}}{FS} = \frac{c_u N_c s_c d_c i_c + \gamma D_f N_q s_q d_q i_q}{1.1}$$ FOR $\phi = 0$

$c_u = 2.2$ KSF $\quad N_c = 5.14 \quad N_q = 1.0$ FOR $\phi = 0$

$$s_c = 1 + \frac{B}{L}\frac{N_q}{N_c} \Rightarrow s_c = 1 + \frac{19.35'}{21.0'} \cdot \frac{1.0}{5.14} = 1.18$$

$$d_c = 1 + 0.4\frac{D_f}{B} = 1 + 0.4\left(\frac{3'}{19.35'}\right) = 1.06$$

↑ USE B'

$$i_c = i_q = \left(1 - \frac{\beta}{90°}\right)^2 \quad \text{WHERE} \quad \beta = \tan^{-1}\frac{F_H}{F_V}$$

$$F_H = 730\text{K} + 289.5\text{K} = 1019.5\text{ K}$$

2-CASK DE, p B5 ↑ ↑ ½ PAD

$F_V = 2801$ K FOR 2-CASK DE

$$\beta = \tan^{-1}\frac{F_H}{F_V} = \tan^{-1}\frac{1019.5\text{K}}{2801\text{ K}} = 20.0°$$

$$i_c = i_q = \left(1 - \frac{\beta}{90°}\right)^2 = \left(1 - \frac{20°}{90°}\right)^2 = 0.60$$

STONE & WEBSTER ENGINEERING CORPORATION

CALCULATION SHEET

▲ 5010 65

CALCULATION IDENTIFICATION NUMBER				PAGE 27
13				
J.O. OR W.O. NO.	DIVISION & GROUP	CALCULATION NO.	OPTIONAL TASK CODE	
05996.01	G(8)	04-3		

DYN BEARING CAPACITY OF PAD: 2-CASK CASE

$\gamma = 125$ PCF (STRUCTURAL FILL) $D_f = 3'$

$$S_q = 1 + \frac{B}{L}\tan\phi = 1.0 \quad \text{SINCE } \phi = 0$$

$$d_q = 1 + 2\tan\phi\,(1-\sin\phi)^2\,\frac{D_f}{B} = 1.0 \quad \text{SINCE } \phi = 0$$

$$q_{ALLOW} = \frac{\overset{C_u}{2.2\text{ KSF}} \times \overset{N_c}{5.14} \times \overset{S_c}{1.18} \times \overset{d_c}{1.06} \times \overset{i_c}{0.6} + \overset{\gamma}{0.125\text{ KCF}} \times \overset{D_f}{3.0} \times \overset{N_q}{1.0} \times \overset{S_q}{1.0} \times \overset{d_q}{1.0} \times \overset{i_q}{0.6}}{FS = 1.1}$$

$$q_{ALLOW} = \frac{\overset{8.72\text{ KSF}}{8.49\text{ KSF} + 0.23\text{ KSF}}}{1.1} = 7.92\text{ KSF}$$

$q_{ACTUAL} = 6.89$ KSF $\therefore$ OK

NOTE: ACTUAL $FS = \dfrac{q_{ult}}{q_{ACTUAL}} = \dfrac{8.72\text{ KSF}}{6.89\text{ KSF}} = 1.27$

DYN BEARING CAPACITY OF PAD: 4-CASK CASE

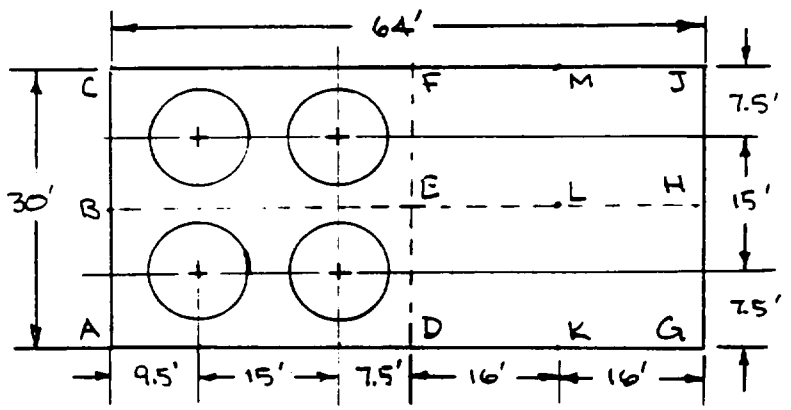

PLAN

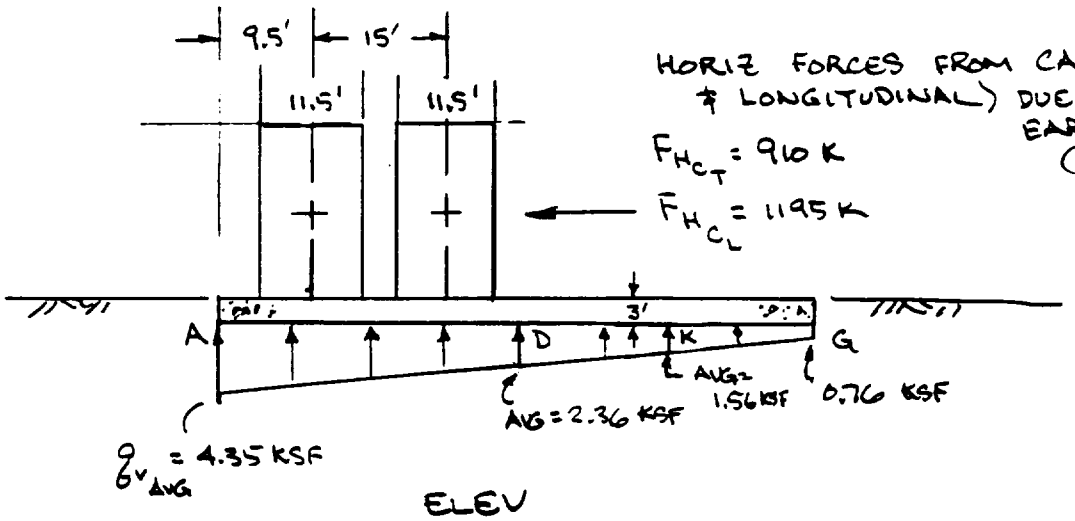

HORIZ FORCES FROM CASK (TRANSVERSE & LONGITUDINAL) DUE TO DESIGN EARTHQUAKE (FROM p 85)

$F_{H_{C_T}} = 910$ K

$F_{H_{C_L}} = 1195$ K

ELEV

STRESSES AT PAD/SOIL INTERFACE PROVIDED BY WEN TSENG (ICEC) - ATTACHMENT B. SEE NEXT 2 PAGES.

DYN BEARING CAPACITY OF PAD: 4-CASK CASE

SOIL BEARING PRESSURES ARE BASED ON INFO FROM ICEC INCLUDED IN ATT B AND ARE SUMMARIZED IN TABLE 3.

VERTICAL PRESSURES INCLUDE: PAD DL = 0.45 KSF, PAD EQ = 0.31 KSF } p. B5

LL OF CASKS = 1.86 KSF ALONG LINE AC & IS ASSUMED TO DECREASE LINEARLY TO 0 ALONG LINE GJ.

CASK EQ PRESSURES ARE SHOWN ON p B4.
RESULTING PRESSURE DISTRIBUTION:

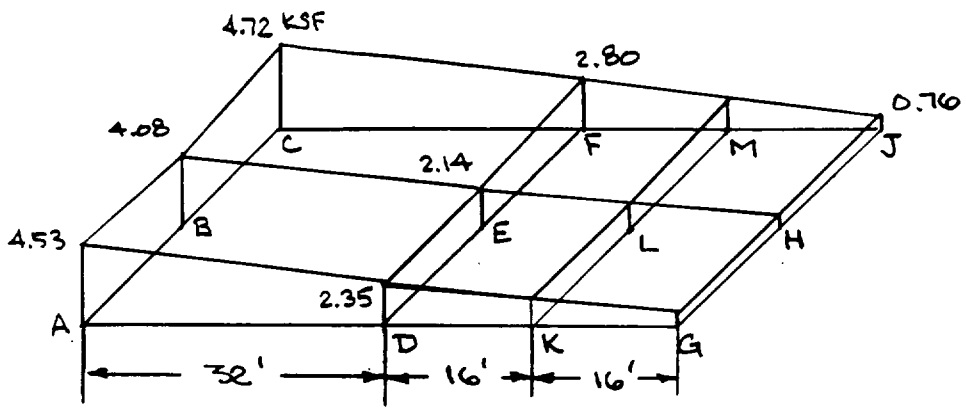

ASSUME 3/4 OF PAD IS EFFECTIVE IN RESISTING LOADS OF 4-CASK CASE

$B = 30'$ $L = \frac{3}{4}\,64 = 48'$

LINEARLY DISTRIBUTE STATIC + DYN LOADING FROM LINE DF TO 48' AWAY FROM LINE AC & DETERMINE FV

VERT STRESSES		KSF	POINT
0.5 (2.35 + 0.76)	=	1.56	K
0.5 (2.14 + 0.76)	=	1.45	L
0.5 (2.80 + 0.76)	=	1.78	M

STONE & WEBSTER ENGINEERING CORPORATION

CALCULATION SHEET

▲ 5010 65

B	CALCULATION IDENTIFICATION NUMBER			PAGE 30
J.O. OR W.O. NO. 05996.01	DIVISION & GROUP G(B)	CALCULATION NO. 04-3	OPTIONAL TASK CODE	

DYN BEARING CAPACITY OF PAD: 4-CASK CASE

CALCULATE F_V

ALONG LINE	AREA =	K/FT
AC	$\frac{15'}{2}(4.53 + 2\times4.08 + 4.72)$ KSF =	130.58 K/FT
DF	$\frac{15'}{2}(2.35 + 2\times2.14 + 2.80)$ =	70.73
KM	$\frac{15'}{2}(1.56 + 2\times1.45 + 1.78)$ =	46.80

$$F_V \sim \frac{32'}{2}(130.58 + 70.73)\,K/_1 + \frac{16'}{2}(70.73 + 46.80)\,K/_1$$

$$F_V = 3221.0\,K + 940.2\,K = \underline{4161\ K}$$

ESTIMATE LOCATION WHERE F_V ACTS ON 30'×48' PORTION OF PAD.

NOTE AVG VERT STRESS ALONG LINES.

LINE

$$AC = \frac{130.58\,K/_1}{30\ FT} = 4.35\ KSF$$

$$DF = \frac{70.73\,K/_1}{30'} = 2.36\ KSF$$

$$KM = \frac{46.8\,K/_1}{30'} = 1.56\ KSF$$

DYN BEARING CAPACITY OF PAD: 4-CASK CASE

DETERMINE ECCENTRICITY OF F_V WRT B, $e_{B_{F_V}}$

ALONG LINE AC

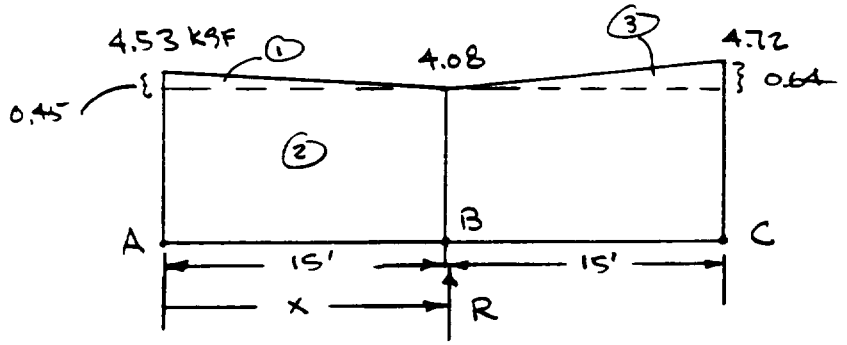

ΣM_A

AREA	K/FT	MOMENT ARM (FT)	MOMENT
1	$\frac{1}{2} \times 0.45 \frac{K}{FT^2} \times 15' = 3.38$	$\frac{1}{3} \times 15' = 5'$	16.9
2	$4.08 \frac{K}{FT^2} \times 30' = 122.40$	$\frac{1}{2} \times 30' = 15'$	1836.0
3	$\frac{1}{2}\, 0.64 \frac{K}{FT^2} \times 15' = 4.80$	$15' + \frac{2}{3} 15' = 25'$	120.0
	$F_V = \Sigma = 130.58$		$Rx = \Sigma = 1972.9$

$$\therefore \quad x = \frac{1972.9 \ K\cdot FT/FT}{130.58 \ K/FT} = 15.1'$$

$$e_{B_{F_V}} = \frac{B}{2} - x = 15 - 15.1 = -0.1'$$

STONE & WEBSTER ENGINEERING CORPORATION

CALCULATION SHEET

▲ 5010 65

CALCULATION IDENTIFICATION NUMBER				PAGE 32
C				
J.O. OR W.O. NO.	DIVISION & GROUP	CALCULATION NO.	OPTIONAL TASK CODE	
05996.01	G(B)	04-3		

DYN BEARING CAPACITY OF PAD: 4-CASK CASE

DETERMINE ECCENTRICITY OF F_V WRT L, $e_{L_{F_V}}$

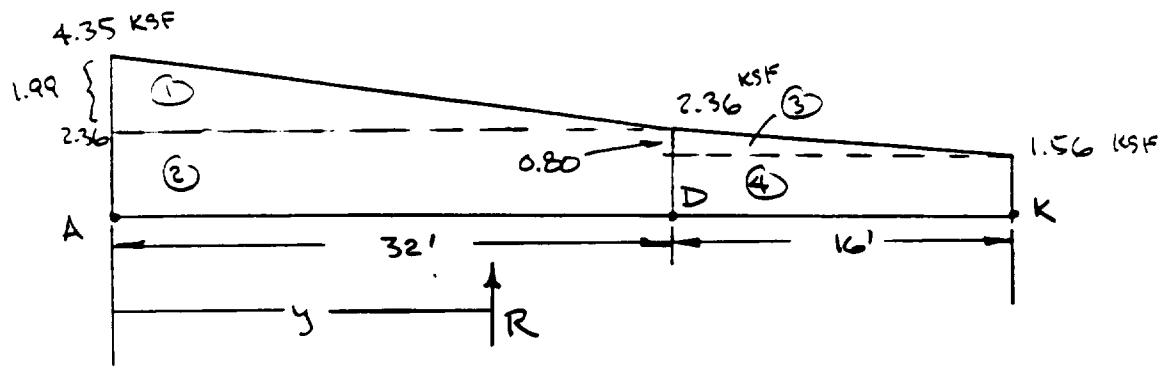

ΣM_A TO FIND y

	FORCE (K/L)	MOMENT ARM (FT)	MOMENT K-FT/L.F.
①	$\frac{1}{2}$ 1.99 × 32' = 31.84	$\frac{1}{3}$ × 32' = 10.67'	339.6
②	2.36 × 32 = 75.52	$\frac{1}{2}$ × 32' = 16'	1208.3
③	$\frac{1}{2}$ 0.80 × 16 = 6.40	32' + $\frac{1}{3}$ 16' = 37.33'	238.9
④	1.56 × 16 = 24.96	32' + $\frac{16'}{2}$ = 40'	998.4

$R = \Sigma F = 138.72$ K/L $\qquad Ry = \Sigma M \quad 2785.3$

$$y = \frac{\Sigma M}{\Sigma F_V} = \frac{2785.3 \text{ K-FT/LF}}{138.72 \text{ K/LF}} = 20.1 \text{ FT}$$

$$e_{L_{F_V}} = \frac{L}{2} - y = 24.0' - 20.1' = 3.9'$$

AS SHOWN ON NEXT PAGE

STONE & WEBSTER ENGINEERING CORPORATION

CALCULATION SHEET

▲ 5010 65

CALCULATION IDENTIFICATION NUMBER				PAGE 33
D				
J.O. OR W.O. NO.	DIVISION & GROUP	CALCULATION NO.	OPTIONAL TASK CODE	
05996.01	G(B)	04-3		

DYN BEARING CAPACITY OF PAD: 4-CASK CASE

PLAN VIEW OF PAD SHOWING LOCATION OF VERTICAL FORCE DUE TO VERTICAL STRESSES FOR 4-CASK LOADING CASE

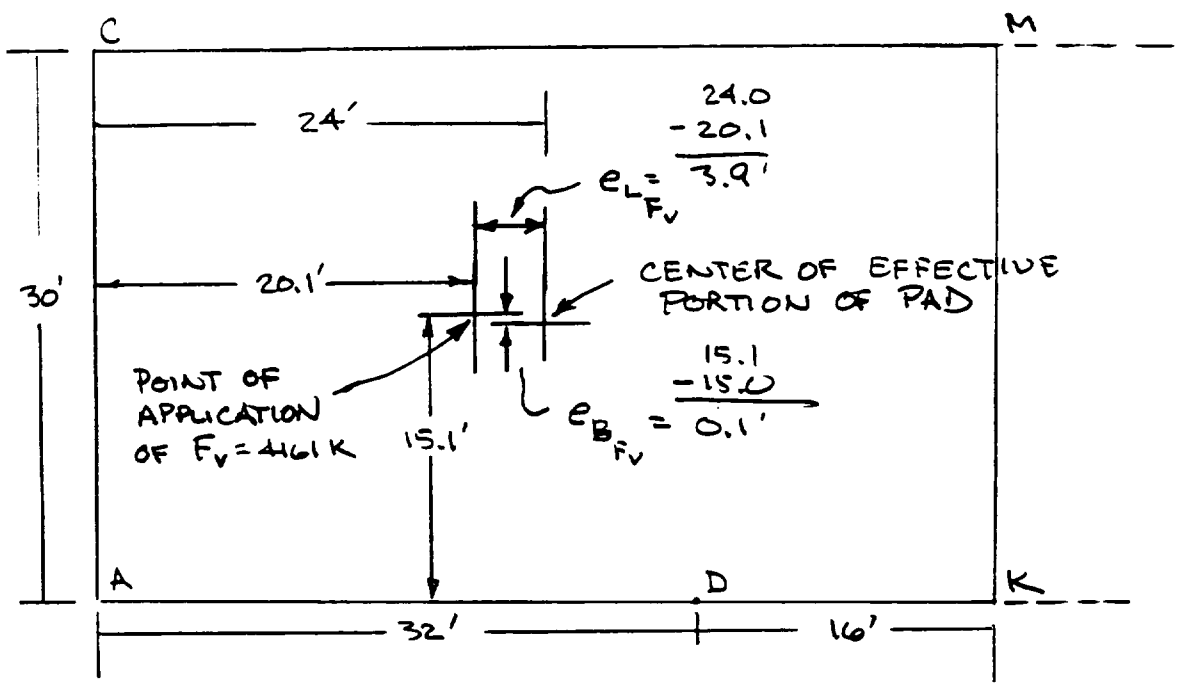

DYN BEARING CAPACITY OF PAD: 4-CASK CASE

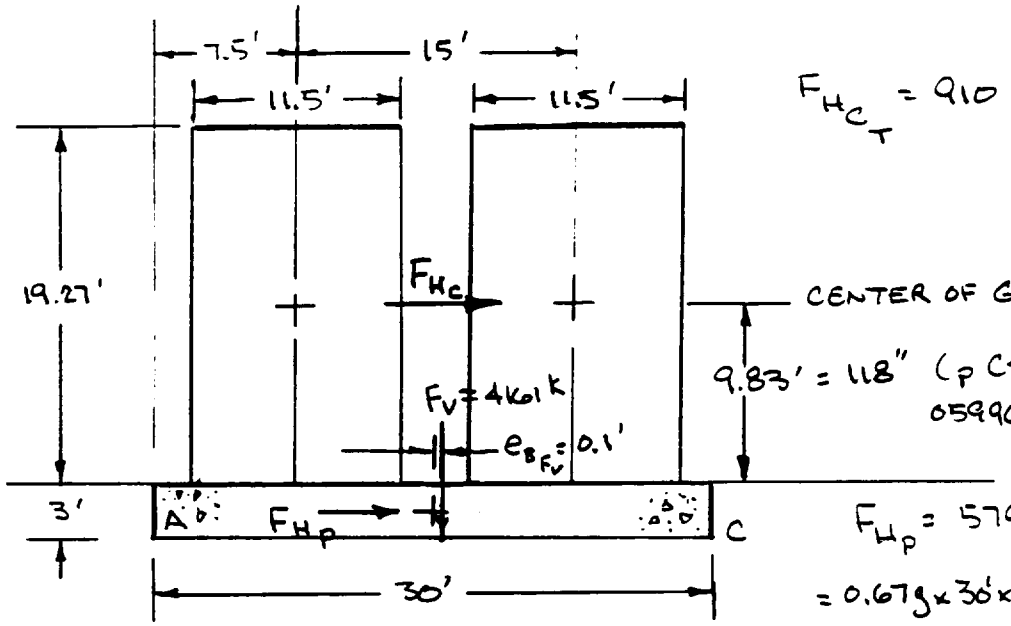

$F_{H_{C_T}} = 910\ K$ (p B5)

CENTER OF GRAVITY OF CASK

$9.83' = 118''$ (p C4 CALC 05996.01-G(B)-05-0)

$F_{H_P} = 579^K$ FOR $30' \times 64'$

$= 0.67g \times 30' \times 64' \times 3' \times \frac{0.15\ K/FT^3}{g}$

ΣM_{F_V} TO FIND LOC'N OF RESULTANT TO RESIST F_H'S

$$R\,\Delta b = 1.5' \times \underbrace{\tfrac{3}{4} \times 579^K}_{3/4\ PAD} + (3' + 9.83')\ \underbrace{910\ K}_{4\text{-CASK TRANSVERSE } F_H}$$

$R = F_V = 4161\ K$ ON $30' \times 48'$ PORTION OF PAD

$$\therefore\ \Delta b = \frac{651.4 + 11{,}675.3\ K\text{-}FT}{4161\ K} = 2.96' = e_{B_{F_H}}$$

$$e_b = e_{B_{F_V}} + e_{B_{F_H}} = 0.1' + 2.96' = 3.1'$$

$$B' = B - 2e_B = 30' - 2 \times 3.1' = \underline{23.8'}$$

▲ 5010.65

F	CALCULATION IDENTIFICATION NUMBER			PAGE 35
J.O. OR W.O. NO. 05996.01	DIVISION & GROUP G(B)	CALCULATION NO. 04-3	OPTIONAL TASK CODE	

DYN BEARING CAPACITY OF PAD: 4-CASK CASE

CALCULATE L' SIMILARLY FOR LONGITUDINAL F_H

$F_{H_{C_L}} = 1195\ K$ (p 85)

ΣM_{F_V} $\quad R\Delta l = 1.5' \times \frac{3}{4} \times 579\ K + (3' + 9.83')\ \underbrace{1195\ K}_{\text{4 CASKS}}$

$R = F_V = 4161\ K$ ON EFFECTIVE PORTION OF PAD (30' x 48')

$$\Delta l = \frac{651.4\ K\text{-}FT + 15{,}331.9\ K\text{-}FT}{4161\ K} = 3.84' = e_{L_{F_H}}$$

$$e_L = e_{L_{F_V}} + e_{L_{F_H}} = 3.9' + 3.84' = 7.74'$$

$$L' = L - 2e_L = 48' - 2 \times 7.74' = \underline{32.52'}$$

$$q_{ACTUAL} = \frac{F_V}{B' \times L'} = \frac{4161\ K}{23.8' \times 32.5'} = \underline{\underline{5.38\ KSF}}$$

DYN BEARING CAPACITY OF PAD: 4-CASK CASE

CALCULATE ALLOWABLE BEARING PRESSURE

$$q_{ALLOWABLE} = \frac{q_{ULT}}{FS} = \frac{c_u N_c s_c d_c i_c + \gamma D_f N_q s_q d_q i_q}{1.1} \quad \text{FOR } \phi = 0$$

$c_u = 2.2$ KSF $\quad N_c = 5.14 \quad N_q = 1.0 \quad$ FOR $\phi = 0$

$$s_c = 1 + \frac{B'}{L'} \frac{N_q}{N_c} \Rightarrow s_c = 1 + \frac{23.8'}{32.5'} \frac{1.0}{5.14} = 1.14$$

$$d_c = 1 + 0.4 \frac{D_f}{B'} = 1 + 0.4 \frac{3'}{23.8'} = 1.05$$

$$i_c = i_q = \left(1 - \frac{\beta}{90°}\right)^2 \quad \text{WHERE} \quad \beta = \tan^{-1} \frac{F_H}{F_V}$$

USE MAX $F_H = F_{H_{3/4\,PAD}} + F_{H_{C_L}}$

$$F_H = \frac{3}{4} \times 579\,K + 1195\,K = 1629\,K$$

$F_V = 4161$ K FOR 4-CASK $\overset{\text{PAD}}{(DL + EQ)} + \overset{\text{CASK}}{(LL + EQ)}$

$$\beta = \tan^{-1} \frac{F_H}{F_V} = \tan^{-1} \frac{1629\,K}{4161\,K} = 21.4°$$

$$i_c = i_q = \left(1 - \frac{\beta}{90°}\right)^2 = \left(1 - \frac{21.4°}{90°}\right)^2 = 0.58$$

STONE & WEBSTER ENGINEERING CORPORATION

CALCULATION SHEET

▲ 5010 65

CALCULATION IDENTIFICATION NUMBER				PAGE 37
J.O. OR W.O. NO.	DIVISION & GROUP	CALCULATION NO.	OPTIONAL TASK CODE	
05996.01	G(B)	04-3		

DYN BEARING CAPACITY OF PAD: 4-CASK CASE

$\gamma = 0.125$ KCF (STRUCTURAL FILL) $D_f = 3'$

$s_q = 1 + \frac{B}{L} \tan\phi = 1.0$ (ASSUME $\phi = 0$)

$d_q = 1 + 2\tan\phi(1-\sin\phi)^2 \frac{D_f}{B} = 1.0$ (ASSUME $\phi = 0$)

$$q_{ULT} = \underset{c_u}{2.2\text{ KSF}} \times \underset{N_c}{5.14} \times \underset{s_c}{1.14} \times \underset{d_c}{1.05} \times \underset{i_c}{0.58} + \underset{\gamma}{0.125\text{ KCF}} \times \underset{D_f}{3'} \times \underset{N_q}{1.0} \times \underset{s_q}{1.0} \times \underset{d_q}{1.0} \times \underset{i_q}{0.58}$$

$q_{ULT} = 7.85 + 0.22 = 8.07$ KSF

$$q_{ALLOWABLE} = \frac{q_{ULT}}{FS} = \frac{8.07\text{ KSF}}{1.1} = 7.33\text{ KSF}$$

$q_{ALLOWABLE} > q_{ACTUAL} = 5.38$ KSF ∴ OK

STONE & WEBSTER ENGINEERING CORPORATION

CALCULATION SHEET

▲ 5010 65

CALCULATION IDENTIFICATION NUMBER				PAGE 38
J.O. OR W.O. NO.	DIVISION & GROUP	CALCULATION NO.	OPTIONAL TASK CODE	
05996.01	G(B)	04-3		

DYN BEARING CAPACITY OF PAD: 8-CASK CASE

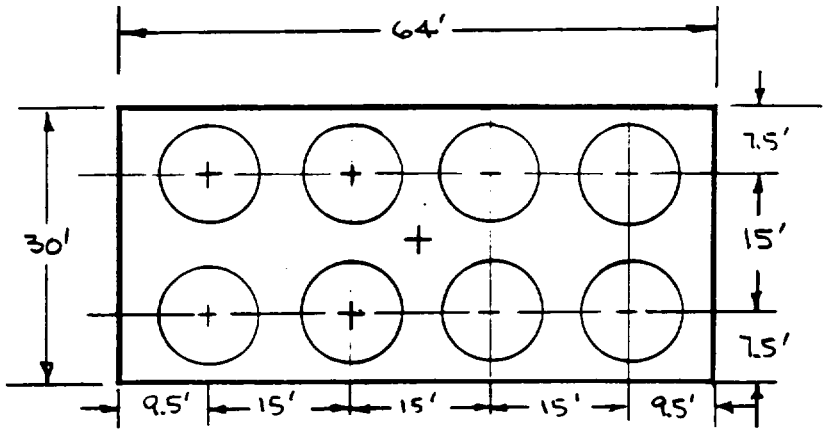

PLAN

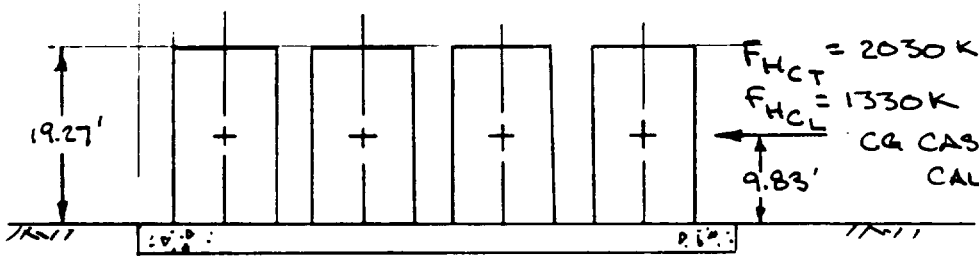

F_{HCT} = 2030 K
F_{HCL} = 1330 K } p B5

CG CASK (p C4 OF CALC 05996.01-G(B)-05-0)

STONE & WEBSTER ENGINEERING CORPORATION

CALCULATION SHEET

5010.65

CALCULATION IDENTIFICATION NUMBER				PAGE 39
J.O. OR W.O. NO.	DIVISION & GROUP	CALCULATION NO.	OPTIONAL TASK CODE	
05996.01	G(8)	04-3		

DYN BEARING CAPACITY OF PAD: 8-CASK CASE

SOIL BEARING PRESSURES FROM TABLE 3

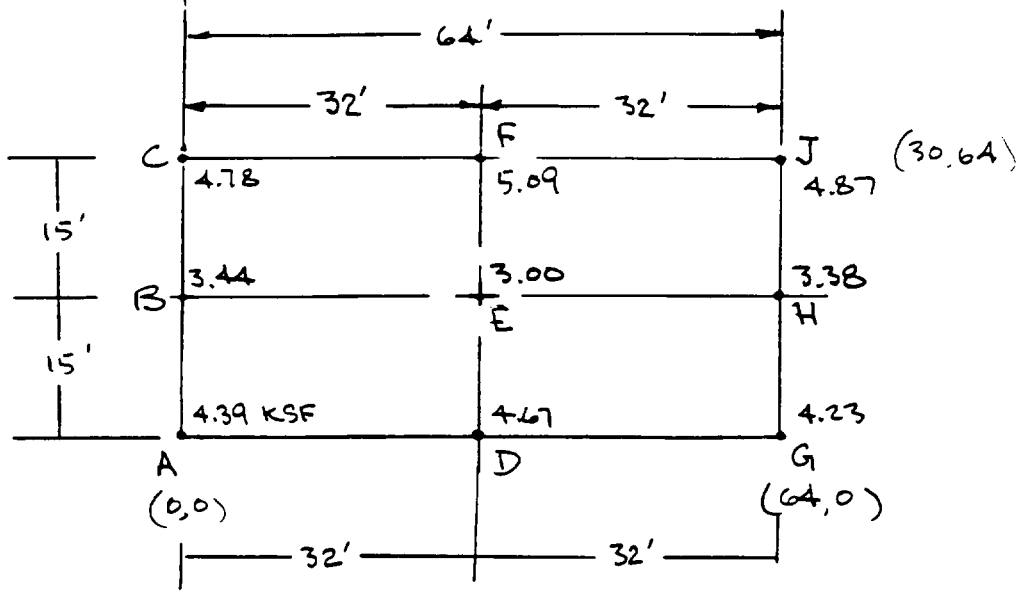

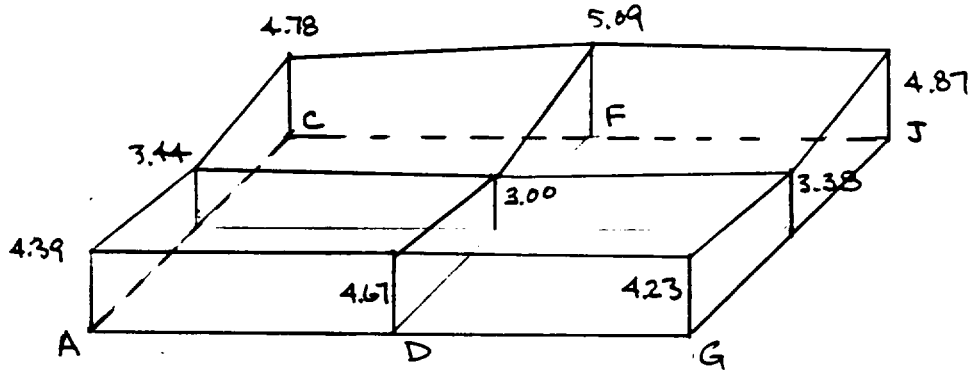

DYN BEARING CAPACITY OF PAD: 8-CASK CASE

CALCULATE F_V:

ALONG LINE	AREA = K/FT			q AVG
AC	$\frac{15}{2}(4.39 + 2\times 3.44 + 4.78)$	=	120.38	4.01
DF	$\frac{15}{2}(4.67 + 2\times 3.00 + 5.09)$	=	118.20	3.94
GJ	$\frac{15}{2}(4.23 + 2\times 3.38 + 4.27)$	=	118.95	3.97

$$F_V \sim \frac{32'}{2}(120.38 + 2\times 118.20 + 118.95) = \underline{7612\ K}$$

ESTIMATE LOCATION WHERE F_V ACTS.
DETERMINE ECCENTRICITY OF F_V WRT B, $e_{B_{F_V}} = \frac{B}{2} - x$

ALONG LINE DF (CENTER LINE, SINCE PAD IS FAIRLY UNIFORMLY LOADED)

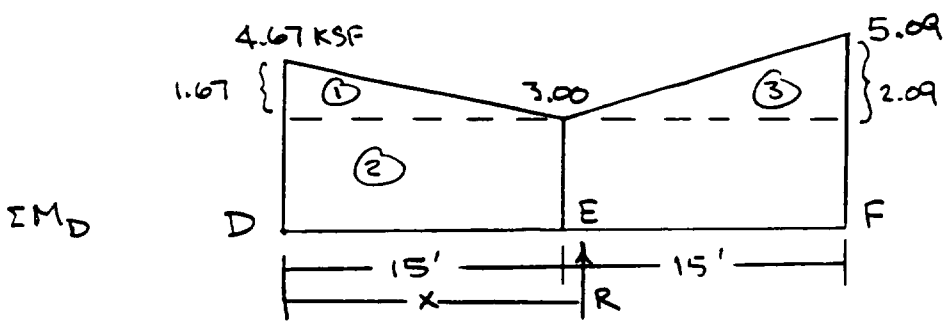

	AREA K/FT	MOMENT ARM (FT)	MOMENT K-FT/FT
1	$\frac{1}{2}$ 1.67 KSF × 15' = 12.53	$\frac{1}{3}\times 15' = 5'$	62.65
2	3.0 × 30' = 90	$\frac{1}{2}\times 30' = 15'$	1350.0
3	$\frac{1}{2}$ 2.09 × 15' = 15.68	$15' + \frac{2}{3}\times 15' = 25'$	392.0
	$R = \Sigma = 118.20$		$Rx = \Sigma = 1804.65$

$$\therefore x = \frac{Rx}{R} = \frac{1804.65\ K\text{-}FT/FT}{118.20\ K/FT} = 15.27' \qquad e_{B_{F_V}} = \frac{30'}{2} - 15.27 = -0.27'$$

STONE & WEBSTER ENGINEERING CORPORATION

CALCULATION SHEET

▲ 5010.65

CALCULATION IDENTIFICATION NUMBER				PAGE 41
J.O. OR W.O. NO. 35996.01	DIVISION & GROUP G(B)	CALCULATION NO. 04-3	OPTIONAL TASK CODE	

DYNAMIC BEARING CAPACITY OF PAD: 8-CASK CASE

DETERMINE ECCENTRICITY OF F_V WRT L, $e_{L_{F_V}} = \frac{L}{2} - y$

USE AVERAGE VALUES ALONG LINES AC, DF, & GJ

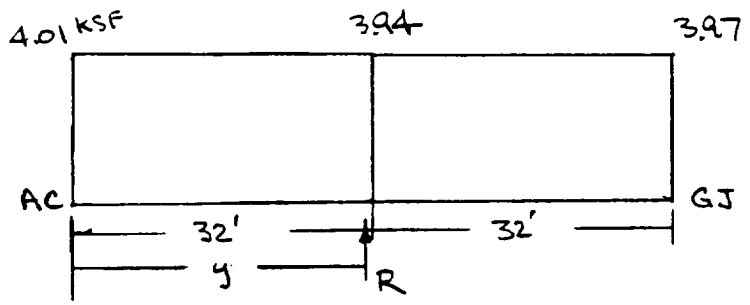

ΣM_{AC}

AREA	K/FT	MOMENT ARM FT	MOMENT $\frac{K\text{-}FT}{FT}$
① $\frac{1}{2}(4.01-3.94)^{KSF} \times 32'$	= 1.12	$\frac{1}{3} \times 32' = 10.67'$	12.0
② $3.94\ KSF \times 64'$	= 252.16	$\frac{1}{2} \times 64' = 32'$	8069.1
③ $\frac{1}{2}(3.97-3.94)^{KSF} \times 32'$	= 0.48	$32' + \frac{2}{3}32' = 53.33'$	25.6
	$R = \Sigma = 253.76$		$R_y = \Sigma = 8106.7$

$$\therefore\ y = \frac{R_y}{R} = \frac{8106.7\ \frac{K\text{-}FT}{FT}}{253.76\ K/FT} = 31.95'$$

$$e_{L_{F_V}} = \frac{L}{2} - y = \frac{64'}{2} - 31.95' = 0.05'$$

STONE & WEBSTER ENGINEERING CORPORATION

CALCULATION SHEET

▲ 5010.65

CALCULATION IDENTIFICATION NUMBER				PAGE 42
J.O. OR W.O. NO.	DIVISION & GROUP	CALCULATION NO.	OPTIONAL TASK CODE	
05996.01	G(B)	04-3		

PLAN VIEW OF PAD SHOWING ~ LOCATION OF VERTICAL FORCE DUE TO VERTICAL STRESSES FROM STATIC AND DYNAMIC LOADS FOR 8-CASK LOADING CASE

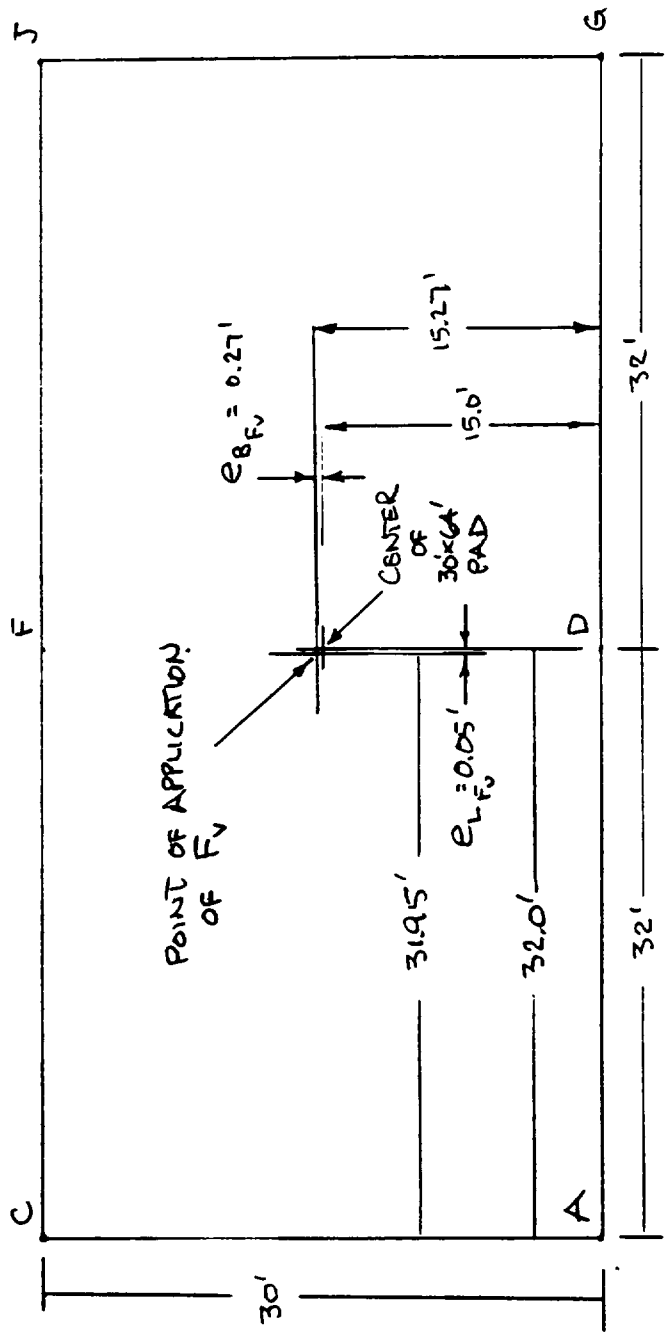

▲ 5010.65

2	CALCULATION IDENTIFICATION NUMBER			PAGE 43
J.O. OR W.O. NO. 05996.01	DIVISION & GROUP G(B)	CALCULATION NO. 04-3	OPTIONAL TASK CODE	

DYN BEARING CAPACITY OF PAD: 8-CASK CASE

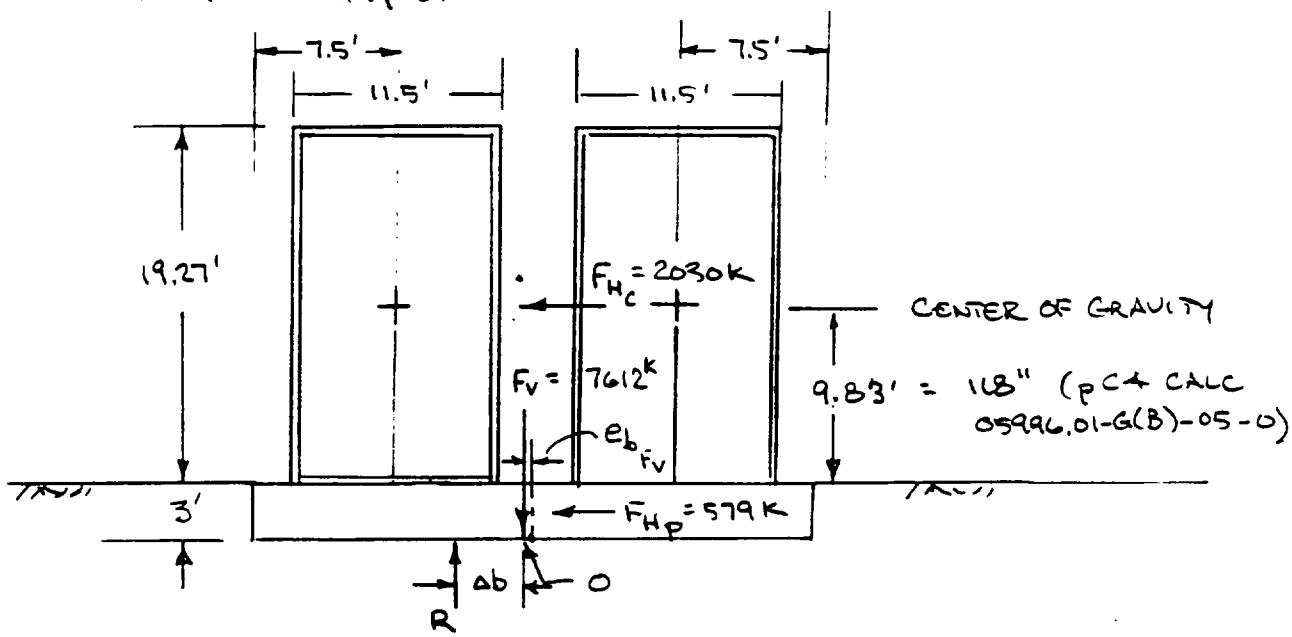

$F_{H_C} = 2030\ K$ FOR 8-CASK CASE (p B5)
TRANVERSE DIRECTION

$$F_{H_P} = \overset{a_h}{0.67g} \times 30' \times 64' \times 3' \times \frac{0.15\ KCF}{g} = 579\ K$$

ΣM_o TO FIND LOCATION OF R TO RESIST MOMENT DUE TO F_H's

$$\overset{=F_V}{R}\,\Delta b = \overset{\text{PAD}}{1.5' \times 579\,K} + \overset{\text{CASKS}}{(3' + 9.83')\,2030\,K}$$

$$\Delta b = \frac{868.5 + 26{,}045\ K\text{-}FT}{7612.\ K} = 3.54\ FT$$

ADD $e_{b_{F_V}} = 0.27\ FT \Rightarrow e_b = 3.54 + 0.27 = 3.81\ FT$

$$B' = B - 2e_b = 30' - 2 \times 3.81' = 22.38\ FT$$

DYN BEARING CAPACITY OF PAD: 8-CASK CASE

SIMILARLY FOR LONGITUDINAL DIRECTION

$F_{H_c} = 1330\ K$ (p B5)

$$\Sigma M_o \qquad \overset{R=F_v}{7612\ K}\ \Delta l = \overset{PAD}{1.5' \times 579\ K} + \overset{CASKS}{(3' + 9.83')(1330\ K)}$$

$$\Delta l = \frac{868.5 + 17{,}064\ K\text{-}FT}{7612\ K} = 2.36'$$

ADD $e_{l_{F_v}} = 0.05\ FT \Rightarrow e_l = 2.36' + 0.05' = 2.41'$

$$L' = L - 2e_l = 64' - 2 \times 2.41' = 59.18\ FT$$

$$q_{ACTUAL} = \frac{F_v}{B' \times L'} = \frac{7612\ K}{22.38\ FT \times 59.18\ FT} = \underline{5.75\ KSF}$$

DYN BEARING CAPACITY OF PAD: 8-CASK CASE

$$q_{ALLOW} = \frac{q_{ULT}}{FS} = \frac{c_u N_c s_c d_c i_c + \gamma D_f N_q s_q d_q i_q}{1.1} \quad \text{FOR } \phi = 0$$

$c_u = 2.2$ KSF $\quad N_c = 5.14 \quad N_q = 1.0$ FOR $\phi = 0$

$s_c = 1 + \frac{B}{L}\frac{N_q}{N_c}$, BUT ASSUME STRIP BECAUSE PADS ARE SO CLOSE TOGETHER IN ROW $\therefore s_c = 1.0$

$$d_c = 1 + 0.4\left(\frac{D_f}{B}\right) = 1 + 0.4\left(\frac{3'}{22.38'}\right) = 1.05$$

↑ USE B'

$$i_c = i_q = \left(1 - \frac{\beta}{90°}\right)^2 \quad \text{WHERE} \quad \beta = \tan^{-1}\frac{F_H}{F_V}$$

$$F_H = 2030\text{ K} + \overset{a_h}{0.67g} \times \frac{30' \times 64' \times 3'}{g} \times 0.15\frac{\text{K}}{\text{FT}^3} = 2609\text{ K}$$

↑ 8-CASK DE, p B5 $\qquad$ PAD = 579 K

$F_V = 7612$ K

$$\beta = \tan^{-1}\frac{2609\text{ K}}{7612\text{ K}} = 18.9°$$

$$\therefore i_c = i_q = \left(1 - \frac{18.9°}{90°}\right)^2 = 0.62$$

$\gamma = 125$ PCF (STRUCTURAL FILL) $\qquad D_f = 3'$

$s_q = 1 + \frac{B}{L}\tan\phi = 1.0$ SINCE $\phi = 0$

$d_q = 1 + 2\tan\phi\,(1 - \sin\phi)^2\frac{D_f}{B} = 1.0$ SINCE $\phi = 0$

DYN BEARING CAPACITY OF PAD: 8-CASK CASE

$$q_{ALLOW} = \frac{\overset{C_u}{2.2\ KSF} \times \overset{N_c}{5.14} \times \overset{S_c}{1.0} \times \overset{d_c}{1.05} \times \overset{i_c}{0.62} + \overset{\gamma}{0.125\ KCF} \times \overset{D_f}{3'} \times \overset{N_q}{1.0} \times \overset{S_q}{1.0} \times \overset{d_q}{1.0} \times \overset{i_q}{0.62}}{FS = 1.1}$$

$$q_{ALLOW} = \frac{7.36^{KSF} + 0.23^{KSF}}{1.1} = 6.90\ KSF$$

NOTE: THIS IS > q_{ACTUAL} = 5.75 KSF ∴ OK

SUMMARY OF RESULTS OF
DYNAMIC BEARING CAPACITY OF PAD
FOR 2-CASK, 4-CASK, & 8-CASK
LOADING CASES

LOADING CASE	q_{ACTUAL} KSF	$q_{ALLOWABLE}$ KSF
2-CASK	6.89	7.92
4-CASK	5.38	7.33
8-CASK	5.75	6.90

DYN BEARING CAPACITY OF PAD:

NOTE: THE VERTICAL INERTIA FORCES DUE TO THE DESIGN EARTHQUAKE CAN ACT UP OR DOWN. THE PREVIOUS PAGES ILLUSTRATE THAT THERE IS AN ADEQUATE FACTOR OF SAFETY AGAINST A BEARING CAPACITY FAILURE WHEN THESE FORCES ACT DOWN. WHEN THEY ACT IN THE UPWARD DIRECTION, THEY REDUCE THE ACTUAL BEARING PRESSURE, WHICH INCREASES THE FACTOR OF SAFETY. HOWEVER, REDUCING THE VERTICAL LOADS RESULTS IN AN INCREASED ANGLE OF INCLINATION, WHICH IS A SLIDING STABILITY PROBLEM, RATHER THAN A BEARING CAPACITY PROBLEM.

SLIDING STABILITY WAS CHECKED FOR THE HORIZONTAL FORCES DUE TO THE DESIGN EARTHQUAKE SHOWN ON p. B5 AND FOUND TO BE ADEQUATE BY ICEC IN CALC 0599601-SC(P017)-1, REV 0, PP 179-181 (INCLUDED IN ATTACHMENT B).

CONCLUSIONS

Static Analysis

The factors of safety (FS) for the static bearing capacity are:

Total Stress Analysis FS = 6.27
Effective Stress Analysis FS = 13.4

The gross allowable static bearing capacity is 4 ksf.

Seismic Analysis

The factors of safety for the seismic analysis are dependent on the coefficient of friction between the cask and the pad. For all earthquake loading cases, a factor of safety greater than 1.1 for seismic stability can be achieved.

The stability analyses were performed for various values of μ and the following values of gross allowable bearing pressures were determined for the worst case (case 3):

Coefficient of Friction Between Casks and Pad μ	Gross Allowable Bearing Pressure $q_{allowable}$ ksf
0.00	8.98
0.10	8.07
0.20	7.23
0.30	6.47
0.40	5.79
0.50	5.18
0.60	4.64
0.67	4.30

The bearing capacity of the pad for the soil pressures determined by the pad designer for 2-cask, 4-cask, and 8-cask loadings were also determined. The actual bearing pressures are less than the allowable bearing pressures for each of these cases, as shown in the summary of these results on p 46.

The foregoing applies for the case where the pad is constructed directly on the in situ soils, so that the cohesion of the silty clay/clayey silt is available to resist the horizontal earthquake forces. If granular material is placed beneath the pads, the factor of safety against sliding of the pad is adequate only if μ between the cask and the pad is $\leq$ 0.3, as shown on p 14.

REFERENCES

1. TERZAGHI, K & PECK, K, 1967, "SOIL MECHANICS IN ENGINEERING PRACTICE", JOHN WILEY & SONS, pg 112.

2. DAS, B, 1990, "PRINCIPLES OF GEOTECHNICAL ENGINEERING", PWS-KENT, PP. 441-526. BOSTON, MA

3. SWEC, 1997a, "GEOTECHNICAL DATA REPORT," REPORT NO. 05996.01-G(B)-02, BOSTON, MA.

4. LETTER REPORT FROM GEOMATRIX ADDRESSED TO JOHN DONNELL, 9-13-96, PAGE 5.

5. SWEC, 1997b, "GEOTECHNICAL DESIGN CRITERIA," CALC 05996.01-G(B)-05, BOSTON, MA.

6. NAVFAC (1982), DM-7.2, "FOUNDATIONS AND EARTH STRUCTURES," DEPT OF THE NAVY, NAVAL FACILITIES ENGINEERING COMMAND, ALEXANDRIA, VA, p. 63.

7. SWEC, 1982, GEOTECHNICAL TECHNICAL GUIDELINE 6.15, REV 1, "DETERMINATION OF LATERAL PRESSURES ON BURIED STRUCTURES IN GRANULAR SOILS," STONE & WEBSTER ENG'G CORP, BOSTON, MA

8. GEOMATRIX CONSULTANTS, INC & WILLIAM LETTIS & ASSOC'S, 1997, PFSF REPORT 0599601-G(P05)-1 REV 0, "DETERMINISTIC EARTHQUAKE GROUND MOTION ANALYSIS," SAN FRANCISCO, CA TABLE 4-1, p 41.

9. SWEC PFSF CALC 05996.01-G(B)-03, REV 1, "ESTIMATE STATIC SETTLEMENT OF STORAGE PADS," BOSTON, MA, MAY 8, 1997.

TABLE 1 - SEISMIC CASE 2

DYNAMIC BEARING CAPACITY OF STORAGE PAD

B =	30.00 ft	0.67 g = EQ_H	
L =	64.00 ft	0.69 g = EQ_V	
D_f =	3.00 ft	N_c = 5.14	Das (1990)
c_u =	2.20 KSF	N_q = 1.00	

F_V = 6280 K = Wt of Cask & Pad + EQ_V due to Cask & Pad

F_{HC} = Minimum of [μ x (WT + EQ_V of Cask) or EQ_H of Cask]

F_{HP} = 579 K (EQ_H of Pad)

	WT K	EQ_V K	EQ_H K
Casks	2852	1968	1911
Pad	864	596	579

Structural Backfill above base of footing:

γ = 0.125 KSF ϕ = 0 degrees

CG of cask = 118" above base of cask, based on p 3.2-5 of HI-STORM TSAR, Rev 1, Jan '97*.

μ	Δb ft	Moment@Center of Pad Base: F_{HC} & F_{HP} K-ft	F_{VC} @ Δb K-ft	ΣM_O K-ft	$e_B = e_L$ ft	F_{HC} K	β degrees	$i_c = i_q$	Gross q_{ult} ksf	q_{act} ksf	Gross q_{all} for FS=1.1	FS
0.00	0.00	868	0	868	0.14	0	5.27	0.89	10.77	3.32	9.79	3.25
0.10	0.98	2,314	4,740	7,054	1.12	482	9.59	0.80	9.70	3.66	8.82	2.65
0.20	1.97	3,760	9,480	13,240	2.11	964	13.80	0.72	8.71	4.07	7.92	2.14
0.30	2.95	5,206	14,219	19,426	3.09	1446	17.87	0.64	7.80	4.56	7.09	1.71
0.40	3.90	6,601	18,791	25,392	4.04	1911	21.63	0.58	7.01	5.13	6.38	1.37
0.50	3.90	6,601	18,791	25,392	4.04	1911	21.63	0.58	7.01	5.13	6.38	1.37
0.60	3.90	6,601	18,791	25,392	4.04	1911	21.63	0.58	7.01	5.13	6.38	1.37
0.67	3.90	6,601	18,791	25,392	4.04	1911	21.63	0.58	7.01	5.13	6.38	1.37

Where:

$$\Delta b = \frac{118'' \times 1'/12'' \times F_{HC}}{(WT_C + EQ_{VC})} \qquad q_{all} = \frac{q_{ult}}{1.1} \qquad FS = \frac{q_{ult} = c_u N_c s_c d_c i_c + \gamma D_f N_q s_q d_q i_q}{q_{act} = F_V / (B' \times L')}$$

Δb = Offset of F_V of Cask from center of Pad

$\beta = \tan^{-1}[(F_{HP} + F_{HC}) / F_V]$

$s_c = 1 + (B/L)(N_q/N_c) = 1.0$ $s_q = 1 + (B/L)\tan\phi = 1.0$ $e_B = \Sigma M_O/F_V$

$d_c = 1 + 0.4(D_f/B) = 1.04$ $d_q = 1 + 2\tan\phi \times (1 - \sin\phi)^2 D_f/B = 1.0$ $B' = B - 2e_B$

$i_c = (1 - \beta/90)^2$ $i_q = i_c$ $L' = L - 2e_L$

Note: Assume $e_L = e_B$, since the earthquake forces in the direction of the length could equal those in the direction of the width.

Assume L » B; therefore $s_c = 1.0$

* See p C4 of Calc 05996.01-G(B)-05-0.

[geotl]\05996\calc\brng_cap\pad.xls on 6/28/97

STONE & WEBSTER ENGINEERING CORPORATION

CALCULATION SHEET

J.O. OR W.O. NO. 05996.01

DIVISION & GROUP G(B)

CALCULATION NO. 04-3

OPTIONAL TASK CODE

CALCULATION IDENTIFICATION NUMBER

PAGE 50

5010.65

TABLE 2 - SEISMIC CASE 3

DYNAMIC BEARING CAPACITY OF STORAGE PAD

B =	30.00 ft	0.67 g = EQ_H	
L =	64.00 ft	0 g = EQ_V	
D_f =	3.00 ft	N_c = 5.14	Das (1990)
c_u =	2.20 KSF	N_q = 1.00	

F_V = 3716 K = Wt of Cask & Pad + EQ_V due to Cask & Pad

F_{HC} = Minimum of [μ x (WT + EQ_V of Cask) or EQ_H of Cask]

F_{HP} = 579 K (EQ_H of Pad)

	WT K	EQ_V K	EQ_H K
Casks	2852	0	1911
Pad	864	0	579

Structural Backfill above base of footing:

γ = 0.125 KSF ϕ = 0 degrees

CG of cask = 118" above base of cask, based on p 3.2-5 of HI-STORM TSAR, Rev 1, Jan '97*.

μ	Δb ft	Moment@Center of Pad Base: F_{HC} & F_{HP} K-ft	F_{VC} @ Δb K-ft	ΣM_O K-ft	$e_B = e_L$ ft	F_{HC} K	β degrees	$i_c = i_q$	Gross q_{ult} ksf	q_{act} ksf	Gross q_{all} for FS=1.1	FS
0.00	0.00	868	0	868	0.23	0	8.85	0.81	9.88	1.98	8.98	4.99
0.10	0.98	1,724	2,805	4,529	1.22	285	13.09	0.73	8.87	2.19	8.07	4.05
0.20	1.97	2,580	5,609	8,189	2.20	570	17.19	0.65	7.95	2.44	7.23	3.26
0.30	2.95	3,435	8,414	11,849	3.19	856	21.11	0.59	7.12	2.73	6.47	2.61
0.40	3.93	4,291	11,219	15,509	4.17	1141	24.83	0.52	6.37	3.08	5.79	2.07
0.50	4.92	5,147	14,023	19,170	5.16	1426	28.35	0.47	5.70	3.52	5.18	1.62
0.60	5.90	6,002	16,828	22,830	6.14	1711	31.64	0.42	5.11	4.06	4.64	1.26
0.67	6.59	6,601	18,791	25,392	6.83	1911	33.82	0.39	4.73	4.52	4.30	1.05

Where: $\Delta b = \dfrac{118'' \times 1'/12'' \times F_{HC}}{(WT_C + EQ_{VC})}$ $q_{all} = \dfrac{q_{ult}}{1.1}$ $FS = \dfrac{q_{ult} = c_u N_c s_c d_c i_c + \gamma D_f N_q s_q d_q i_q}{q_{act} = F_V / (B' \times L')}$

Δb = Offset of F_V of Cask from center of Pad $\beta = \tan^{-1}[(F_{HP} + F_{HC}) / F_V]$

$s_c = 1 + (B/L)(N_q/N_c) = 1.0$ $s_q = 1 + (B/L)\tan\phi = 1.0$ $e_B = \Sigma M_O/F_V$

$d_c = 1 + 0.4(D_f/B) = 1.04$ $d_q = 1 + 2\tan\phi \times (1 - \sin\phi)^2 D_f/B = 1.0$ $B' = B - 2e_B$

$i_c = (1 - \beta/90)^2$ $i_q = i_c$ $L' = L - 2e_L$

Note: Assume $e_L = e_B$, since the earthquake forces in the direction of the length could equal those in the direction of the width.

Assume L » B; therefore s_c = 1.0

* See p C4 of Calc 05996.01-G(B)-05-0.

[geotl]\j05996\calc\brng_cap\pad.xls on 6/26/97

STONE & WEBSTER ENGINEERING CORPORATION

CALCULATION SHEET

J.O. OR W.O. NO. 05996.01

DIVISION & GROUP G(B)

CALCULATION NO. 04-3

OPTIONAL TASK CODE

CALCULATION IDENTIFICATION NUMBER

PAGE 51

5010 65

TABLE 3

DYNAMIC BEARING CAPACITY OF PAD

Summary of Vertical Soil Bearing Pressures (ksf) from ICEC (See Attachment B)

Loading	Point	A	B	C	D	E	F	G	H	J
2-Cask	Cask LL	1.67	1.67	1.67	0.00	0.00	0.00	0.00	0.00	0.00
	Cask EQ	3.34	2.00	1.45	0.74	0.32	0.41	0.00	0.00	0.00
	Pad DL	0.45	0.45	0.45	0.45	0.45	0.45	0.45	0.45	0.45
	Pad EQ	0.31	0.31	0.31	0.31	0.31	0.31	0.31	0.31	0.31
	100% Vert	**5.77**	**4.43**	**3.88**	**1.50**	**1.08**	**1.17**	**0.76**	**0.76**	**0.76**
4-Cask	Cask LL	1.86	1.86	1.86	0.93	0.93	0.93	0.00	0.00	0.00
	Cask EQ	1.91	1.46	2.10	0.66	0.45	1.11	0.00	0.00	0.00
	Pad DL	0.45	0.45	0.45	0.45	0.45	0.45	0.45	0.45	0.45
	Pad EQ	0.31	0.31	0.31	0.31	0.31	0.31	0.31	0.31	0.31
	100% Vert	**4.53**	**4.08**	**4.72**	**2.35**	**2.14**	**2.80**	**0.76**	**0.76**	**0.76**
8-Cask	Cask LL	1.57	1.57	1.57	1.57	1.57	1.57	1.57	1.57	1.57
	Cask EQ	2.06	1.11	2.45	2.34	0.67	2.76	1.90	1.05	2.54
	Pad DL	0.45	0.45	0.45	0.45	0.45	0.45	0.45	0.45	0.45
	Pad EQ	0.31	0.31	0.31	0.31	0.31	0.31	0.31	0.31	0.31
	100% Vert	**4.39**	**3.44**	**4.78**	**4.67**	**3.00**	**5.09**	**4.23**	**3.38**	**4.87**

TO APR 3 1997 T. E. Spanseller

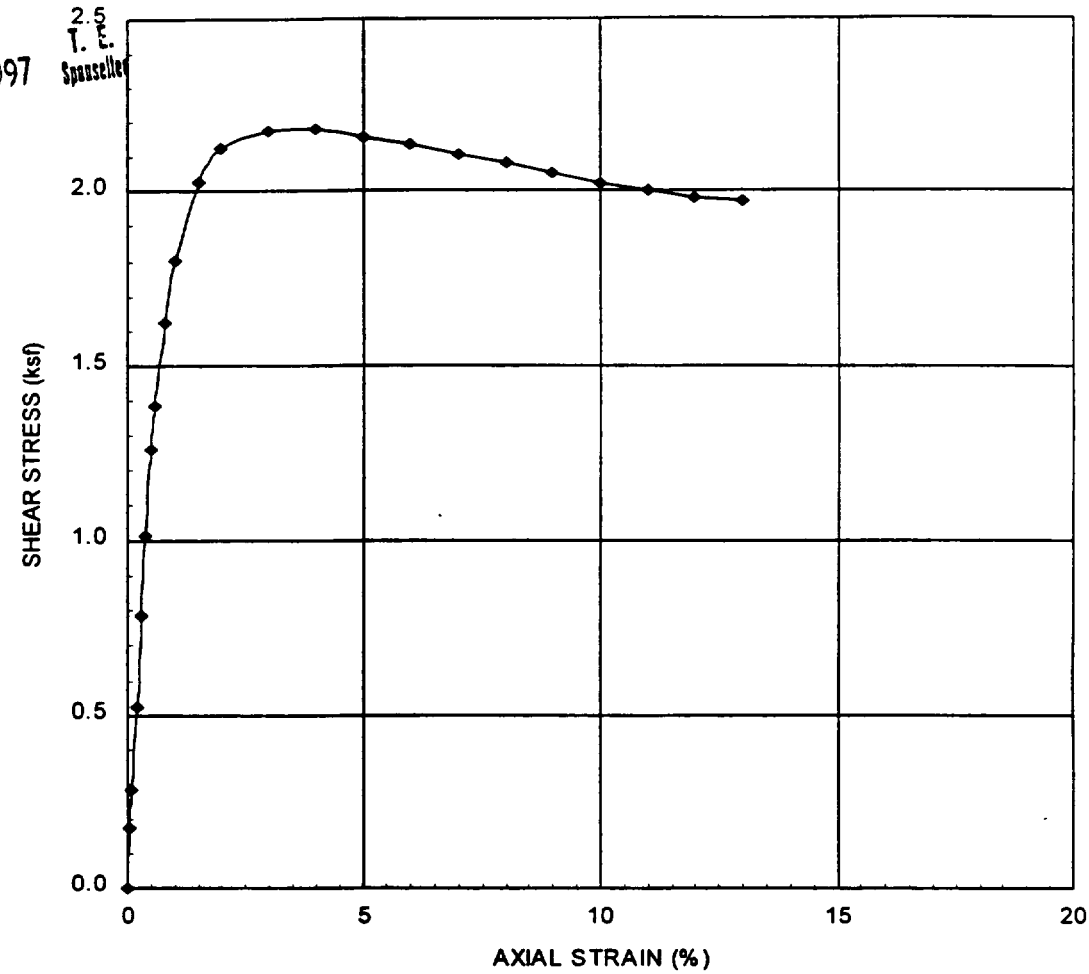

SAMPLE INFORMATION:

BORING:	B-4	DATE:	12/21/96
SAMPLE:	U-3D	TESTED BY:	ACS
DEPTH:	10.4 ft	CHECKED:	PJT
DESCRIPTION:	silty CLAY/clayey SILT		

SPECIMEN INFORMATION: (start of shear)

HEIGHT:	0.532 ft	WATER CONTENT:	27.4 %
DIAMETER:	0.238 ft	DRY UNIT WEIGHT:	67.1 pcf.
AREA:	0.0443 ft²		

TEST DATA:

LOADING:	Axial Compression	STRAIN RATE:	0.6 %/min
CELL PRESSURE:	1.3 ksf		

UNDRAINED SHEAR STRENGTH:	2.18 ksf
COMPRESSIVE STRENGTH:	4.36 ksf
FAILURE STRAIN:	4.0 %

PRIVATE FUEL STORAGE FACILITY
SKULL VALLEY
PRIVATE FUEL STORAGE, LLC

FIGURE 1

STONE & WEBSTER ENGINEERING CORP. BOSTON, MASSACHUSETTS	UNCONSOLIDATED UNDRAINED COMPRESSION TEST BORING B-4, SAMPLE U-3D	JO 05996.01 January 1997

...ED APR 3 1997 T. E. Spanseller

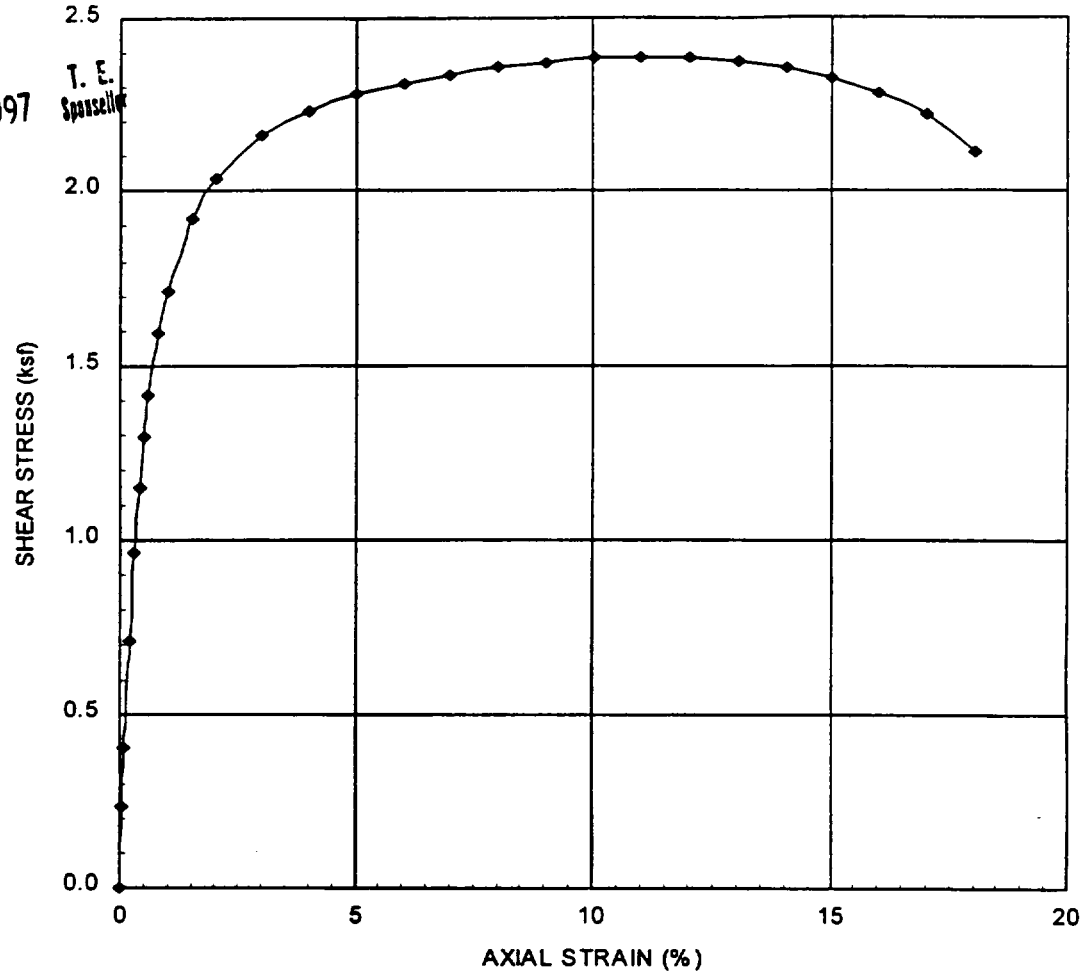

SAMPLE INFORMATION:

BORING:	C-2	DATE:	12/18/96
SAMPLE:	U-2D	TESTED BY:	ACS
DEPTH:	11.1 ft	CHECKED:	PJT
DESCRIPTION:	clayey SILT		

SPECIMEN INFORMATION: (start of shear)

HEIGHT:	0.553 ft	WATER CONTENT:	35.6 %
DIAMETER:	0.238 ft	DRY UNIT WEIGHT:	57.9 pcf
AREA:	0.0444 ft²		

TEST DATA:

LOADING:	Axial Compression	STRAIN RATE:	0.6 %/min
CELL PRESSURE:	1.3 ksf		

UNDRAINED SHEAR STRENGTH:	2.39 ksf
COMPRESSIVE STRENGTH:	4.77 ksf
FAILURE STRAIN:	11.0 %

PRIVATE FUEL STORAGE FACILITY
SKULL VALLEY
PRIVATE FUEL STORAGE, LLC

FIGURE 2

STONE & WEBSTER ENGINEERING CORP. BOSTON, MASSACHUSETTS	UNCONSOLIDATED UNDRAINED COMPRESSION TEST BORING C-2, SAMPLE U-2D	JO 05996.01 January 1997

ATTACHMENT A TO CALC 05996.01-G(B)-04-2 p A1/1

NOTES OF TELEPHONE CONVERSATION

JO No. 05996.01

PRIVATE FUEL STORAGE, LLC
PRIVATE FUEL STORAGE FACILITY

Date: 06-19-97
Time: 2:45 PM EDT

FROM:	Stan M. Macie	SWEC-Denver 1E		Tie Line 321-7305
	Wen Tseng	(ICEC)	Voice	(510) 841-7328
			(FAX)	(510) 841-7438
TO:	Paul J. Trudeau	SWEC-Boston 245/03		(617) 589-8473

SUBJECT: DYNAMIC BEARING CAPACITY OF PAD

DISCUSSION:

WTseng reported that his pad design analyses are being prepared for three loading cases: 2 casks, 4 casks, and 8 casks. The dynamic loads that he is using are based on the forcing time histories he received from Holtec. These forcing time histories were developed using a coefficient of friction between the cask and the pad of 0.2 and 0.8, where 0.2 provides the lower bound and 0.8 provides the upper bound loads from the cask to the pad.

He indicated that the bearing pressures at the base of the pad are greatest for the 2-cask dynamic loading case for $\mu = 0.8$ between the cask and the pad, because of eccentricity of the loading. For this case, the vertical pressures at the 30' wide loaded end of the pad are 5.77 ksf at one corner and 3.87 ksf at the other. He reported that it is reasonable to assume this pressure decreases linearly to 0 at a distance of ~32 ft; i.e., approximately half of the pad is loaded in this case. He also indicated that the horizontal pressure at the base of the pad is 1.04 ksf at the 30' wide end of the pad that is loaded by the 2 casks, and that this pressure decreases linearly over a distance of ~40' from the loaded end. He noted that the vertical pressures include the loadings (DL + dynamic loadings) of the casks and the pad, but the horizontal pressures apply only to the casks. Therefore, the inertia force of the whole pad must be added to the horizontal loads calculated based on the horizontal pressure distribution described above.

Since the table of allowable bearing pressures as a function of coefficient of friction between the cask and the pad that is in the design criteria does not include a value for $\mu = 0.8$, WTseng asked PJTrudeau to provide the allowable bearing pressure for this case.

ACTION ITEMS:

SUPERSEDED BY ATT B 3

PJTrudeau to determine the dynamic allowable bearing pressure for the 2-cask loading case.

COPY TO: NTGeorges Boston 245/03
SMMacie Denver 1E

ATTACHMENT B TO CALC 05996.01-G(B)-04-3

P B1/8

CEC

CALCULATION SHEET

CALC. NO. SC(P017)-1 REV. NO. 0

ORIGINATOR M. Tsai DATE 6/20/97 CHECKED [illegible] DATE 6/20/97

PROJECT Private Fuel Storage Facility JOB NO. 1083-000

SUBJECT Storage Pad Analysis and Design SHEET NO. 174

6.2 Site Bearing Stability checks

6.2.1 Vertical soil bearing pressure and horizontal soil shear stresses

The soil pressures due to 7 casks with one transporter plus one cask and 100% impact from CECSAP (Attachment A):

nodes	displacement (ft)	K_s (subgrade modulus)	P_s (ksf)
287	-1.525E-01	20 k/ft³	3.05
293	-1.135E-01	20	2.27
299	-7.743E-02	20	1.55
157	-1.141E-01	20	2.28
163	-8.931E-02	20	1.77
169	-6.477E-02	20	1.30
1	-7.444E-02	20	1.49
7	-4.836E-02	20	1.17
3	-4.20E-02	20	0.84

Post-it® Fax Note 7671	Date 6/25/97	# of pages ▶ 8
To PAUL TRUDEAU	From SAN MACIE	
Co./Dept. SWEC	Co. SWEC	
Phone #	Phone #	
Fax # 2959	Fax #	

ATT B CALC 05996.01-G(B)-04-3

B2

CALCULATION SHEET

CALC. NO. SC(PO17)-1 REV. NO. 0

ORIGINATOR M. Tsay DATE 6/20/97 CHECKED MSS DATE 6-20-97

PROJECT Private Fuel Storage Facility JOB NO. 1083-000

SUBJECT Storage Pad Analysis and Design SHEET NO. 175

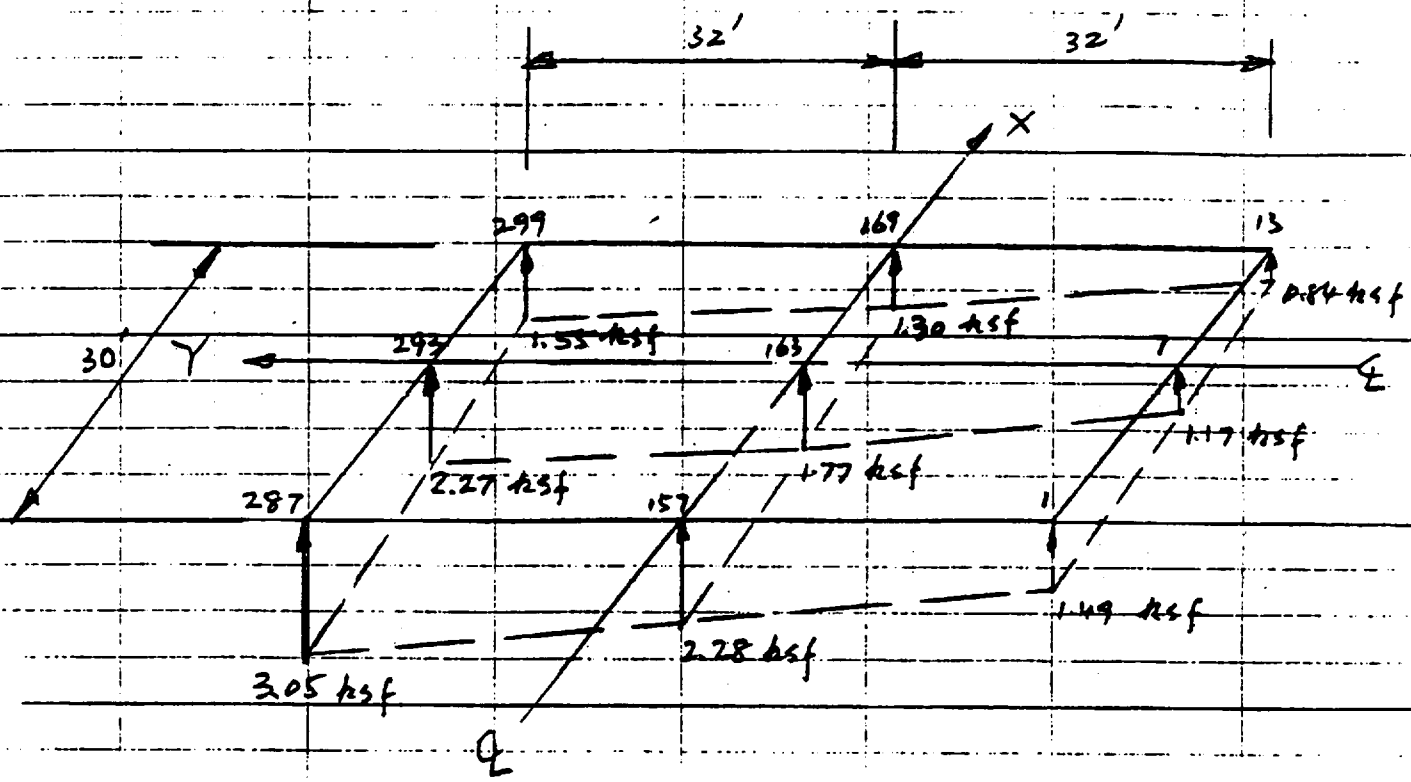

Vertical soil pressure for live load of 7 casks plus one cask on Transporter with a dynamic impact factor of 1.0

FIG. P-1

ATT B Calc 05996.01-G(B)-04-3 B3

CALCULATION SHEET

CALC. NO. SC(P017)-1 REV. NO. 0

ORIGINATOR [illegible] DATE 6/20/97 CHECKED [illegible] DATE 6-20-97

PROJECT Private Fuel Storage Facility JOB NO. 1083-000

SUBJECT Storage Pad Analysis and Design SHEET NO. 176

SUMMARY OF DYNAMIC VERTICAL SOIL BEARING PRESSURES

Node No.	2 CASKS Δ_{max} (1) (ft)	2 CASKS P (2) (k/ft²)	4 CASKS Δ_{max} (1) (ft)	4 CASKS P (2) (k/ft²)	8 CASKS Δ_{max} (1) (ft)	8 CASKS P (2) (k/ft²)
1	NA	0.	NA	0.	.03139	1.899
7	NA	0.	NA	0.	.01733	1.048
13	NA	0.	NA	0.	.04200	2.541
144	.01230	0.744	.01082	0.655	.03868	2.340
150	.00532	0.322	.00742	0.449	.01106	0.669
156	.00681	0.412	.01832	1.108	.04559	2.758
287	.05525	3.342	.03156	1.909	.03410	2.063
293	.03314	2.005	.02408	1.457	.01831	1.108
299	.02391	1.446	.03466	2.097	.04046	2.448

Note: (1) = Δ_{max} obtained from CECSAP shown on p. 75

(2) $P = \Delta_{max} \cdot K_v' = 60.494$ K/FT/FT²

where $K_v' = \frac{K_v}{30' \times 64'}$, and $K_v = 9.679 \times 10^6 \frac{LB}{IN} = 1.1615 \times 10^5 \frac{K}{FT}$

(REF. 3, p. C-6)

ATT B CALC 05996.01-G(B)-04-3 B4

CALCULATION SHEET

CALC. NO. SC(Pad)-1 REV. NO. 0

ORIGINATOR [illegible] DATE 6-20-97 CHECKED [illegible] DATE 6/20/97

PROJECT Private Fuel Storage Facility JOB NO. 1083-000

SUBJECT Storage Pad Analysis and Design SHEET NO. 177

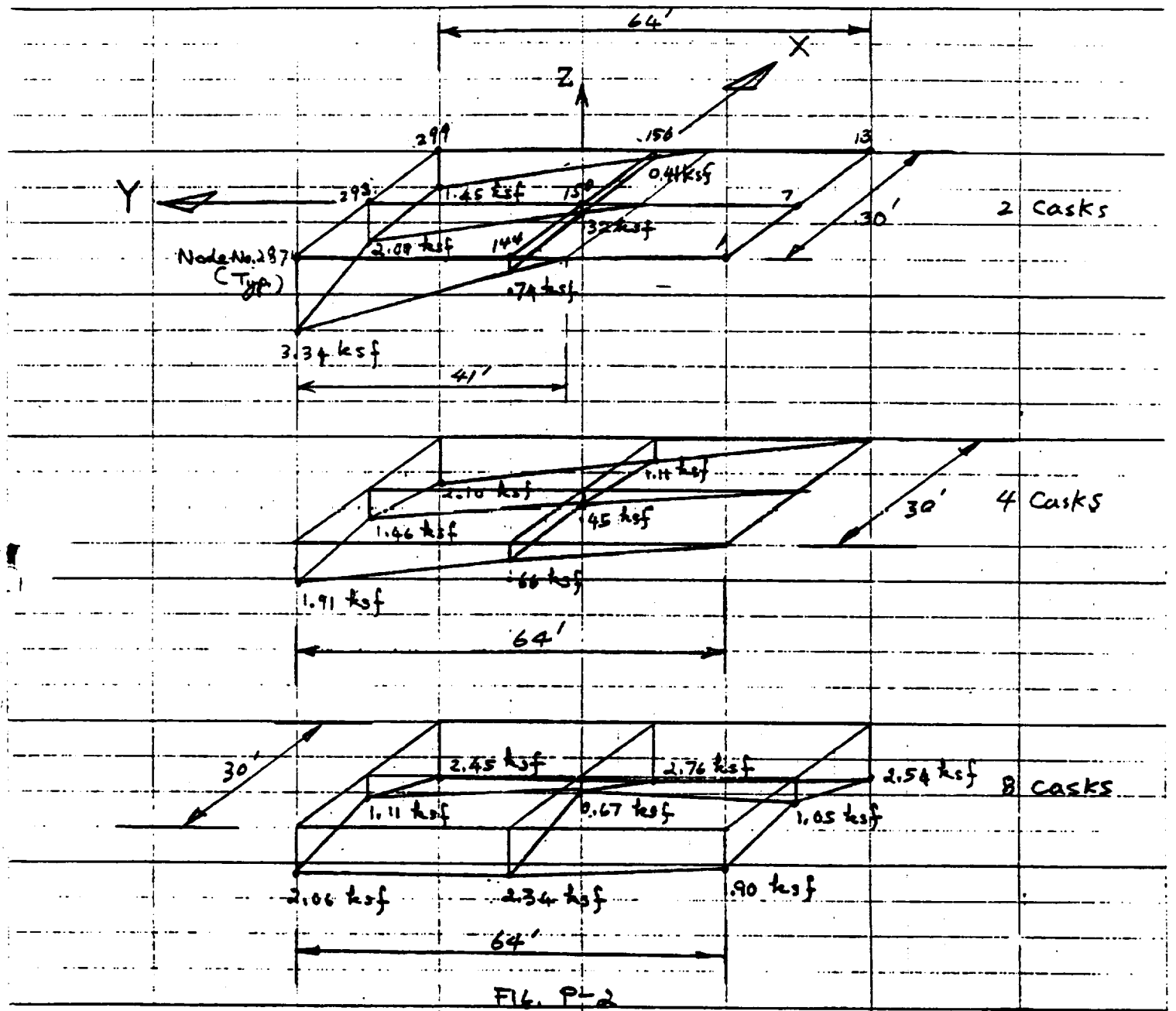

FIG. PL-2

Maximum Vertical Soil Pressure (P_V) Due To Design Earthquake (Excluding Pad Inertial Force)

ATT B CALC 05996.01-G(B)-04-3 B5

CALCULATION SHEET

CALC. NO. SC(P017)-1 REV. NO. 0

ORIGINATOR KK DATE 6/20/97 CHECKED MSZ DATE 6-20-97

PROJECT Private Fuel Storage Facility JOB NO. 1083-000

SUBJECT Storage Pad Analysis and Design SHEET NO. 178

SUMMARY TABLE FOR
VERTICAL SOIL BEARING PRESSURES AND
HORIZONTAL SOIL SHEAR FORCES OR STRESSES

LOADING CONDITION	P_V (1) (K/FT^2)	F_{HL} (2) (KIPS)	F_{HT} (2) (KIPS)
D	0.45	0.	0.
L (2 CASKS)	1.67	0.	0.
L (4 CASKS)	1.86	0.	0.
L (8 CASKS)	1.57	0.	0.
L (7 CASKS + 1 TRANSPORTER WITH A DYNAMIC IMPACT FACTOR)	SEE FIG. P-1	0. $0.67 \times 3' \times 30' \times 64' \times 0.15 \frac{K}{FT^3} = 579^K \approx 580K$ PER TELCON PJT & WEN TSENG 6/27/97	0.
E (PAD INERTIA)	0.31	58	58
E (2 CASKS)	SEE FIG. P-2	670	730
E (4 CASKS)	SEE FIG. P-2	1195	910
E (8 CASKS)	SEE FIG. P-2	1330	2030

NOTES: (1) P_V = VERTICAL SOIL BEARING PRESSURES PER UNIT AREA

(2) F_{HL} AND F_{HT} ARE TOTAL FORCES FOR THE ENTIRE PAD TO BE DISTRIBUTED OVER THE CONTACT AREA SHOWN IN FIG. P-2

ATT B CALL 05996.01-G(B)-04-3

B6

CALCULATION SHEET

CALC. NO. SC(P0177-1 REV. NO. 0

ORIGINATOR [illegible] DATE 6/17/97 CHECKED [illegible] DATE 6/17/97

PROJECT Private Fuel Storage Facility JOB NO. 1083-000

SUBJECT Storage Pad Analysis and Design SHEET NO. 179

6.2.2 Horizontal Sliding Stability Check

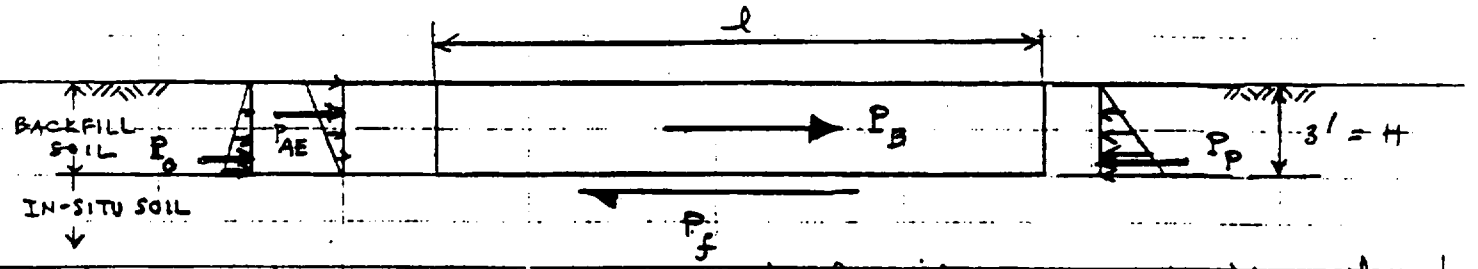

To be conservative in lateral soil pressures, backfill soil is used as side soil as shown above

Total at-rest pressure: $P_o = \frac{1}{2} K_o \cdot \gamma H^2$

where $K_o = 0.43$ and $\gamma = 0.125$ KCF (Backfill soil, see Ref. 8)

Total earthquake active pressure: $P_{AE} = \frac{1}{2} \Delta K_{AE} \gamma H^2$

where $\Delta K_{AE} = \frac{3}{4} \alpha_h$, $\alpha_h = 0.67$, and $\gamma = 0.125$ KCF (Ref. 8)

Total dynamic force acting on the pad:

$$P_B = (P_c^2 + P_I^2)^{1/2}$$

where P_c = dynamic force acting on the pad resulting from applying dynamic loads exerted by the casks on top of the pad as obtained from CECSAP analyses on p. 72, and $P_I = W_{pad} \times \alpha_h = W_{pad} \times 0.67$

Allowable passive pressure: $P_p = \frac{1}{2} K_p \gamma H^2$

where $K_p = 3.7$, $\gamma = 0.125$ KCF (Ref. 8)

Allowable adhesive force: $P_f = c \times l \times w$

where $c = 2.2$ KSF, l = length of the pad in y-direction = 64', and w = width of the pad = 30' (Ref. 8)

ATT B CALC 05996.01-G(B)-04-3

B7

CALCULATION SHEET

CALC. NO. SC(P017)-1 REV. NO. 0

ORIGINATOR [illegible] DATE 6/17/97 CHECKED MST DATE 6/17/97

PROJECT Private Fuel Storage Pad JOB NO. 1083-000

SUBJECT Storage Pad Analysis and Design SHEET NO. 180

Forces acting in the x-direction (short direction of the pad, 30') are calculated as follows:

$P_o = \frac{1}{2} \times 0.43 \times 0.125 \times 3^2 \times 64 = 15.5$ kips

$P_{AE} = \frac{1}{2} \times (\frac{3}{4} \times 0.67) \times .125 \times 3^2 \times 64 = 18.1$ kips

$P_c = F_x = 2030$ kips (from CEESAP, 8 cases, see p. 72)

$P_I = .150 \times 30 \times 64 \times 3 \times 0.67 = 579$ kips

$P_B = (2030^2 + 579^2)^{1/2} = 2111$ kips

$P_p = \frac{1}{2} \times 3.7 \times .125 \times 3^2 \times 64 = 133$ kips

$P_f = 2.2 \times 64 \times 30 = 4224$ kips

Forces acting in the y-direction (long direction of the pad, 64')

$P_o = \frac{1}{2} \times .43 \times .125 \times 3^2 \times 30 = 7.3$ kips

$P_{AE} = \frac{1}{2} \times (\frac{3}{4} \times 0.67) \times .125 \times 3^2 \times 30 = 8.5$ kips

$P_c = F_y = 1330$ kips (from CEESAP, 8 cases, see p. 72)

$P_I = .150 \times 30 \times 64 \times 3 \times 0.67 = 579$ kips

$P_B = (1330^2 + 579^2)^{1/2} = 1451$ kips

$P_p = \frac{1}{2} \times 3.7 \times .125 \times 3^2 \times 30 = 62$ kips

$P_f = 2.2 \times 64 \times 30 = 4224$ kips

CEC

CALCULATION SHEET

CALC. NO. SC(P017)-1 REV. NO. 0

ORIGINATOR KW DATE 6/17/97 CHECKED MTT DATE 6/17/97

PROJECT Private Fuel Storage Pad JOB NO. 1083-000

SUBJECT Storage Pad Analysis and Design SHEET NO. 181

	x-direction	y-direction
P_o	15.5 kips	7.3 kips
P_{AE}	18.1 kips	8.5 kips
P_B	2111 kips	1451 kips
Total Lateral Force = P_D =	2145 kips	1467 kips
P_p	18.3 kips	.62 kips
P_f	4224 kips	4224 kips
Total resistance = P_R =	4357 kips	4286 kips

Factor of safety against sliding ($FS_{sliding}$) in the x-direction can be calculated as:

$$FS_{sliding,x} = \frac{P_R}{P_D} = \frac{4357}{2145} = 2.03 > 1.1 \Rightarrow \text{no sliding}$$

(allowable, Ref. 8)

$FS_{sliding}$ in the y-direction can be calculated as:

$$FS_{sliding,y} = \frac{P_R}{P_D} = \frac{4286}{1467} = 2.92 > 1.1 \Rightarrow \text{no sliding}$$