Entergy

Entergy Operations, Inc.
P O Box 756
Port Gibson, MS 39150
Tel 601 437 6409
Fax 601 437 2795

William A. Eaton
Vice President
Operations
Grand Gulf Nuclear Station

October 13, 2000

U.S. Nuclear Regulatory Commission
Washington, D.C. 20555

Attention: Document Control Desk

Subject: Grand Gulf Nuclear Station
Docket No. 50-416
License No. NPF-29
Unanalyzed Condition – Turbine Control Valves May Move in Excess of Design Assumptions
LER 2000-006-00

GNRO-2000/00076

Gentlemen:

Attached is Licensee Event Report (LER) 2000-006-00, which is a final report.

Yours truly,

William A Eaton

WAE/RRJ
Attachment: LER 2000-006-00
cc: Ms. J. L. Dixon-Herrity, GGNS Senior Resident (w/a)
Mr. D. E. Levanway (Wise Carter)(w/a)
Mr. L. J. Smith (Wise Carter) (w/a)
Mr. N. S. Reynolds (w/a)
Mr. H. L. Thomas (w/o)

Mr. Ellis W. Merschoff (w/a)
Regional Administrator
U.S. Nuclear Regulatory Commission
Region IV
611 Ryan Plaza Drive Suite 400
Arlington, TX 76011

ATTN: ADDRESSEE ONLY
Mr. S. P. Sekerak, NRR/DLPM/PD IV-I (W/2)
U.S. Nuclear Regulatory Commission
One White Flint North, Mail Stop 07-D1
11555 Rockville Pike
Rockville, MD 20852-2378

IE22

NRC FORM 366 (6-1998) U.S. NUCLEAR REGULATORY COMMISSION

LICENSEE EVENT REPORT (LER)

APPROVED BY OMB NO. 3150-0104 EXPIRES 06/30/2001
Estimated burden per response to comply with this mandatory information collection request 50.0 hrs. Reported lessons learned are incorporated into the licensing process and fed back to industry. Forward comments regarding burden estimate to the Records Management Branch (T-6 F33), U.S. Nuclear Regulatory Commission, Washington, DC 20555-0001, and to the Paperwork Reduction Project (3150-0104), Office of Management and Budget, Washington, DC 20503. If an information collection does not display a currently valid OMB control number, the NRC may not conduct or sponsor, and a person is not required to respond to, the information collection.

FACILITY NAME (1)	DOCKET NUMBER (2)	PAGE (3)
Grand Gulf Nuclear Station, Unit 1	05000-416	1 of 5

TITLE (4)
Unanalyzed Condition – Turbine Control Valves May Move in Excess of Design Assumptions

EVENT DATE (5)			LER NUMBER (6)			REPORT DATE (7)			OTHER FACILITIES INVOLVED (8)	
MONTH	DAY	YEAR	YEAR	SEQUENTIAL NUMBER	REVISION NUMBER	MONTH	DAY	YEAR	FACILITY NAME	DOCKET NUMBER
									N/A	05000
09	18	2000	2000	-- 006 --	00	10	13	2000	N/A	05000

OPERATING MODE (9)	1	THIS REPORT IS SUBMITTED PURSUANT TO THE REQUIREMENTS OF 10 CFR § (Check one or more) (11)							
			20.2201(b)		20.2203(a)(2)(v)		50.73(a)(2)(i)		50.73(a)(2)(viii)
POWER LEVEL (10)	13%		20.2203(a)(1)		20.2203(a)(3)(i)	X	50.73(a)(2)(ii)		50.73(a)(2)(x)
			20.2203(a)(2)(i)		20.2203(a)(3)(ii)		50.73(a)(2)(iii)		73.71
			20.2203(a)(2)(ii)		20.2203(a)(4)		50.73(a)(2)(iv)		OTHER
			20.2203(a)(2)(iii)		50.36(c)(1)		50.73(a)(2)(v)		Specify in Abstract below or in NRC Form 366A
			20.2203(a)(2)(iv)		50.36(c)(2)		50.73(a)(2)(vii)		

LICENSEE CONTACT FOR THIS LER (12)

NAME	TELEPHONE NUMBER (include Area Code)
Rita R. Jackson / Senior Licensing Specialist	601-437-2149

COMPLETE ONE LINE FOR EACH COMPONENT FAILURE DESCRIBED IN THIS REPORT (13)

CAUSE	SYSTEM	COMPONENT	MANUFACTURER	REPORTABLE TO EPIX	CAUSE	SYSTEM	COMPONENT	MANUFACTURER	REPORTABLE TO EPIX

SUPPLEMENTAL REPORT EXPECTED (14)				EXPECTED SUBMISSION DATE (15)	MONTH	DAY	YEAR
	YES (If yes, complete EXPECTED SUBMISSION DATE).	X	NO				

ABSTRACT (Limit to 1400 spaces, i. e., approximately 15 single-spaced typewritten lines) (16)

On September 18, 2000, during evaluation of the data from a recent reactor scram that occurred on September 15, 2000, an unanalyzed condition was identified. Specifically, a main generator partial load reject can actuate a circuit contained in the turbine controls that may cause Turbine Control Valve (TCV) motion in excess of design assumptions and may not always actuate a reactor scram/recirculation pump downshift as assumed by analysis. No End of Cycle / Recirculation Pump Trip (EOC/RPT) initiation occurred with the TCV fast closure. It appears that the EOC/RPT logic was not satisfied.

During this event, both the direct scram and the bypass valves functioned as designed. Although there was some limited reactor pressurization (as seen by the secondary pressure scram signal), this transient is bounded by the assumptions in the analysis due to the slower TCV closure rate and bypass function experienced in this event. Therefore all operating margins were protected during the event and the health and safety of the public was not affected.

This event is being reported pursuant to 10CFR50.73(a)(2)(ii).

A. Reportable Occurrence

On September 18, 2000, during evaluation of the data from a recent reactor scram that occurred on September 15, 2000, an unanalyzed condition was identified. Specifically, a main generator partial load reject can actuate a circuit contained in the turbine controls that may cause Turbine Control Valve (TCV) motion in excess of design assumptions and may not always actuate a reactor scram/recirculation pump downshift as assumed by analysis. Theoretically, with valve motion in excess of design assumption, the reactor scram/recirculation pump trip may fail to actuate and, assuming failure of the bypass valves, Minimum Critical Power Ratio (MCPR) limits could be affected.

Therefore, because an unanalyzed condition was identified, it is being reported pursuant to 10CFR50.73(a)(2)(ii).

B. Initial Conditions

At the time of the determination of reportability, the plant was in MODE 1 and reactor power was at 13 percent.

C. Description of Occurrence

For the following discussion, refer to the attached figure, page 5 of 5.

As a result of the transient on 9/15/00, generator output power swung enough to pick up one of the two load reject circuits (JC01 was adjusted to approximately 450% power drop per second, P801 was set at approximately 600%. Both should have been set at 450%). The JC01 load reject circuit that actuated caused the following two actions:

1. The load reference signal was turned off, which left only the speed signal to the turbine. This caused the turbine control valves to close quickly to reduce generator load from 100% to about 12%.
2. The rate limiter circuit associated with the control valves was bypassed, which normally limits valve speed to 40% change in valve position per second.

The P801 load reject circuit is designed to dump all EHC pressure off of the control valves, causing them to fast close. This would have caused all 4 of the End of Cycle/Recirculation Pump Trip (EOC/RPT) secondary fluid pressure sensors to actuate, resulting in a scram and tripping the recirculation pumps. However, since it was set at approximately 600% per second and the load reject did not occur, it did not actuate. Therefore, hydraulic pressure was reduced through the Electro-Hydraulic Control (EHC) system (as set by the speed signal) rather than being dumped from actuation of the load reject solenoids (N32F506A & B)[TG]. It appears that only 2 of the 4 pressure switches actuated, which happened to be in a combination that caused a reactor scram but not an EOC/RPT.

As a result of this event, Condition Report CR-GGN-2000-1352 was written and a Significant Event Response Team (SERT) was formed to investigate this event and recommend long term actions.

D. Apparent Cause

During the scram, all safety systems responded properly (see LER 2000-005-00), except that no EOC/RPT initiation occurred as a result of TCV fast closure. It should be noted that only the JC01 logic detected a load reject signal. The P801 load reject relay N41M791 (see attached figure) did not trip, so the expected 800 msec dump of secondary fluid did not occur. This event allowed a TCV fast closure to occur for about 125 msec before EHC began to control TCVs to maintain minimum load. Data is unavailable to determine the exact reason the EOC/RPT initiation did not occur, but it appears that the EOC/RPT logic was not satisfied.

Due to differences in Reactor Protection System (RPS) and EOC/RPT logic, and calibration tolerances, it is possible to get a RPS initiation without EOC/RPT. Secondary fluid pressure of 44.3 psig or less should result in a reactor scram and EOC/RPT. For EOC/RPT initiation, channels A and B or C and D (C71-N605A/B/C/D) must trip. RPS requires channels A or C and B or D. It appears that TCV fast closure may have been sensed by only two logic channels (A and D or B and C) [IT]. Data is unavailable to confirm the specific secondary fluid pressure channels that tripped.

RPS actuation with no EOC/RPT is possibly explained by the extremely brief duration (about 125 msec) of the downward spike in secondary fluid pressure. Based on GETARS data, the load reject signal existed for about 50 msec, and TCV D began to close about 100 msec after the load reject signal was received. The start of valve movement represents the point where secondary fluid pressure is less than 44.3 psig. The rate of TCV closure began to decrease about 125 msec after start of valve movement, indicating secondary fluid pressure returned above the TCV fast closure setpoint. The lead TCV position was then maintained at about 12% open. Due to the short duration of the transient, and calibration tolerances, all four of the logic channels may not have reached the 44.3 psig setpoint before secondary fluid pressure started to recover.

E. Corrective Actions

Immediate Actions

The plant was restricted to operating at a level below that which would require EOC/RPT (<40% power and slow speed recirculation pump operation) until EOC/RPT operability was resolved. The N41-M791 load reject relay was recalibrated to the required setpoints. Engineering Request (ER) 2000-0770-00, Rev. 0 was issued to raise the TCV secondary fluid pressure setpoint for EOC/RPT (and RPS) from 44.3 to 46.0 psig. The purpose of this change is to ensure sufficient logic channels trip as required on TCV fast closure to initiate the reactor scram and EOC/RPT recirculation pump downshift to Low Frequency Motor Generator (LFMG).

Long Term Actions

Condition Report CR-GGN-2000-1352 was initiated to investigate the failure of EOC/RPT to actuate and to address Turbine/Generator and RPS response to load reject events. A Significant Event Response Team (SERT) was formed to investigate this failure and recommend long term actions.

F. Safety Assessment

The safety significance of this event centers around failure of the EOC/RPT to function in response to a partial generator load reject and the associated TCV fast closure. The purpose of this function is to trip the recirculation pumps to slow speed in anticipation of a pressurization transient in the reactor vessel. The EOC/RPT is activated whenever main turbine electro-hydraulic control (EHC) secondary fluid pressure drops below 44.3 psig. The conditions necessary to achieve the 44.3 psig are governed by the turbine control system. The EOC/RPT function is credited in this cycle-specific transient analysis in the development of the MCPR operating limits.

As described in the GGNS UFSAR 15.2.2, the generator load rejection and the generator load rejection with failure of the bypass valves are classified as incidents of moderate frequency or anticipated operational transients. Events in this category are analyzed to prevent fuel-cladding failures. In this case, operating limits are established, such that, if the event occurs, the Tech Spec 2.1.1.2 MCPR safety limit and Linear Heat Generation Rate (LHGR) overpower requirements are protected. During this event, both the direct scram and the bypass valves functioned as designed. Although there was some limited reactor pressurization (as seen by the secondary pressure scram signal), this transient is bounded by that assumed in the analysis due to the slower TCV closure rate and bypass function experienced in this event. Therefore all operating margins were protected during the event and the health and safety of the public was not affected.

Another significant aspect of this event is the potential failure of the scram function. The direct scram function is also activated by low EHC secondary fluid pressure with identical setpoints and equipment as the EOC/RPT. Based on a generic BWR-6 analysis performed by the NSSS vendor for the initial cycle, failure of the direct scram with concurrent failures of the EOC/RPT and the bypass system concluded that, although fuel operating limits are exceeded, no fuel damage occurs due to the brief duration of the event.

G. Additional Information

Energy Industry Identification System (EIIS) Codes are identified in the text within brackets [ ].

Figure - Load Reject Logic Diagram (see page 5 of 5)

LICENSEE EVENT REPORT (LER)

FACILITY NAME (1)	DOCKET (2)	LER NUMBER (6)			PAGE (3)
		YEAR	SEQUENTIAL NUMBER	REVISION NUMBER	
Grand Gulf Nuclear Station, Unit 1	05000-416	2000	006	00	5 OF 5

TEXT *(If more space is required, use additional copies of NRC Form 366A) (17)*

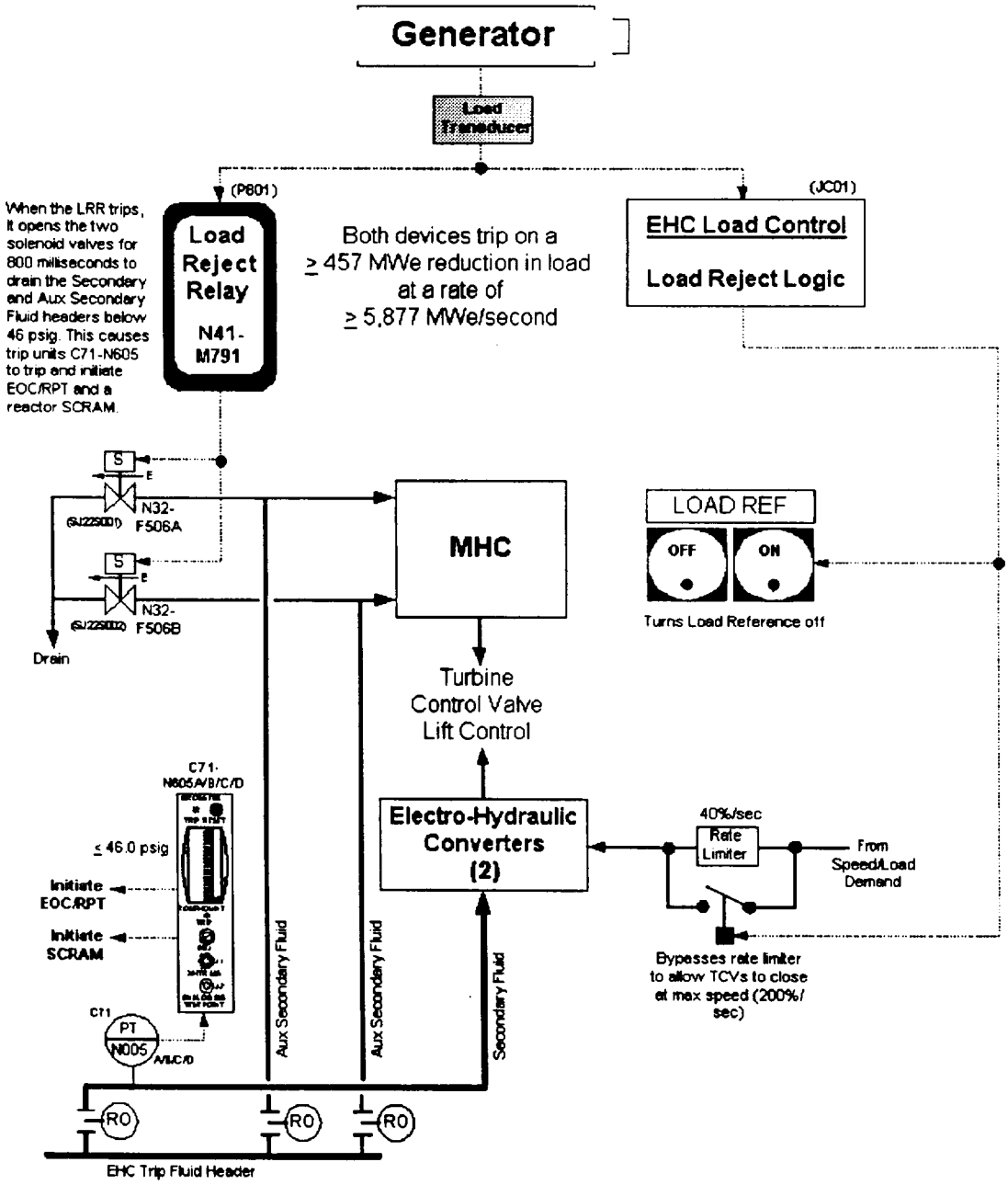

LOAD REJECT LOGIC

FOR INFORMATION ONLY

Revision Date: 9/20/00

Figure