Appendix B8

ANSYS Stress Intensity Contour Plots for Run PT24PSDP

Note:

The stress plots shown in Figures B8-3, B8-4, B8-5, B8-8, B8-9, and B8-10 exclude elements adjacent to the rail support (bottom centerline).

ML010250105

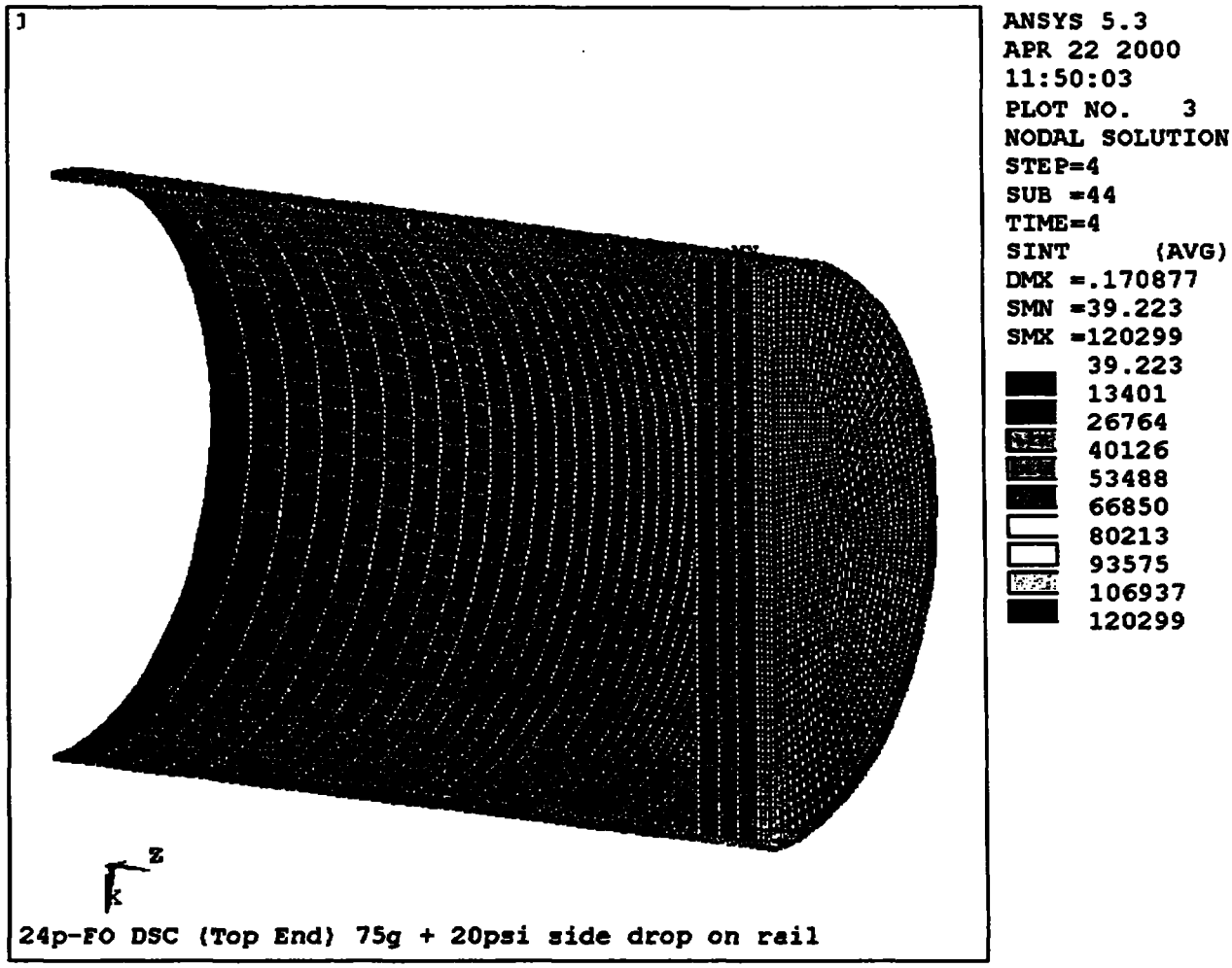

Figure B8-1

24P-FO DSC Shell Assembly, Top End Components

Stress Intensity Contour

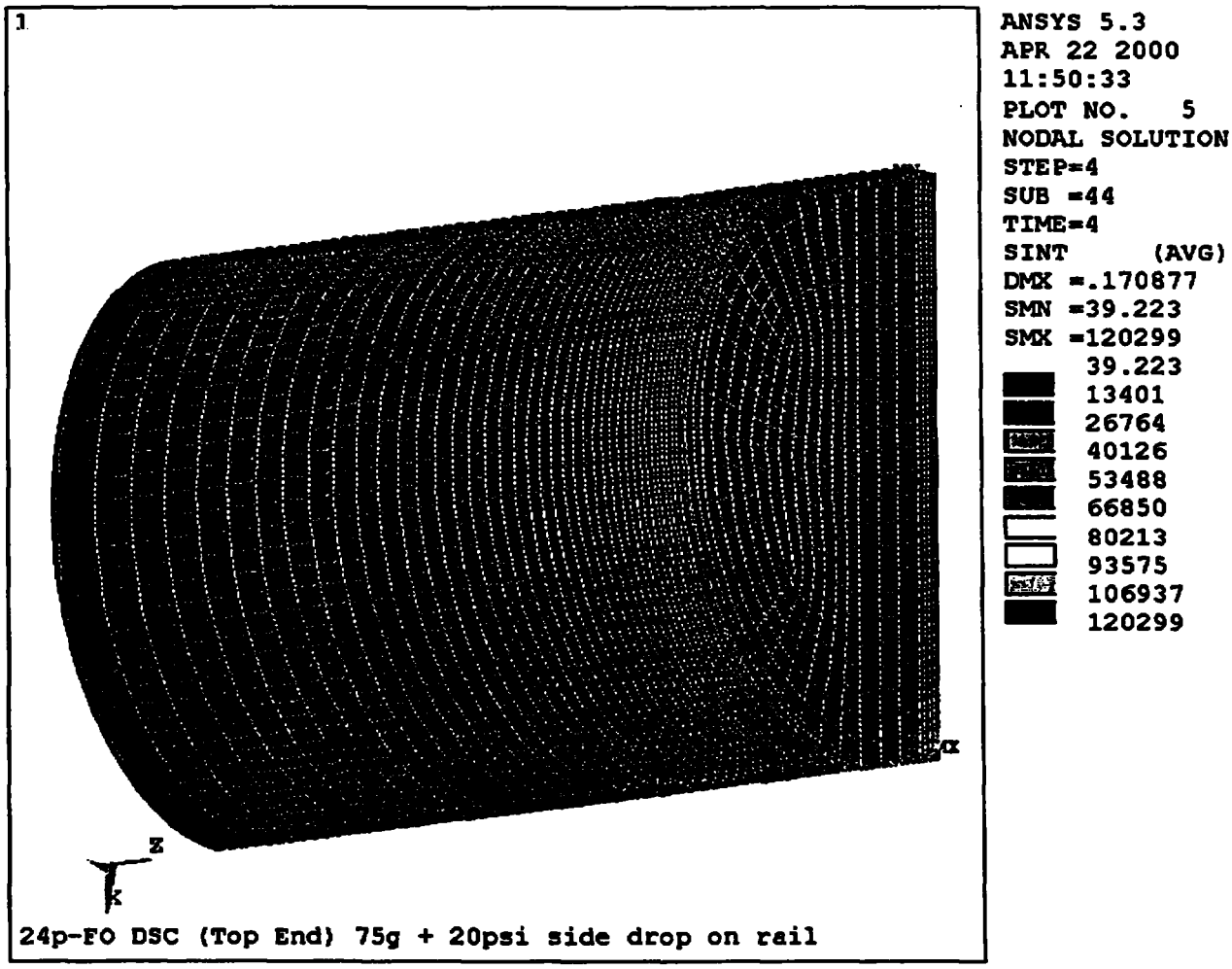

Figure B8-2

24P-FO DSC Shell Assembly, Top End Components

Stress Intensity Contour

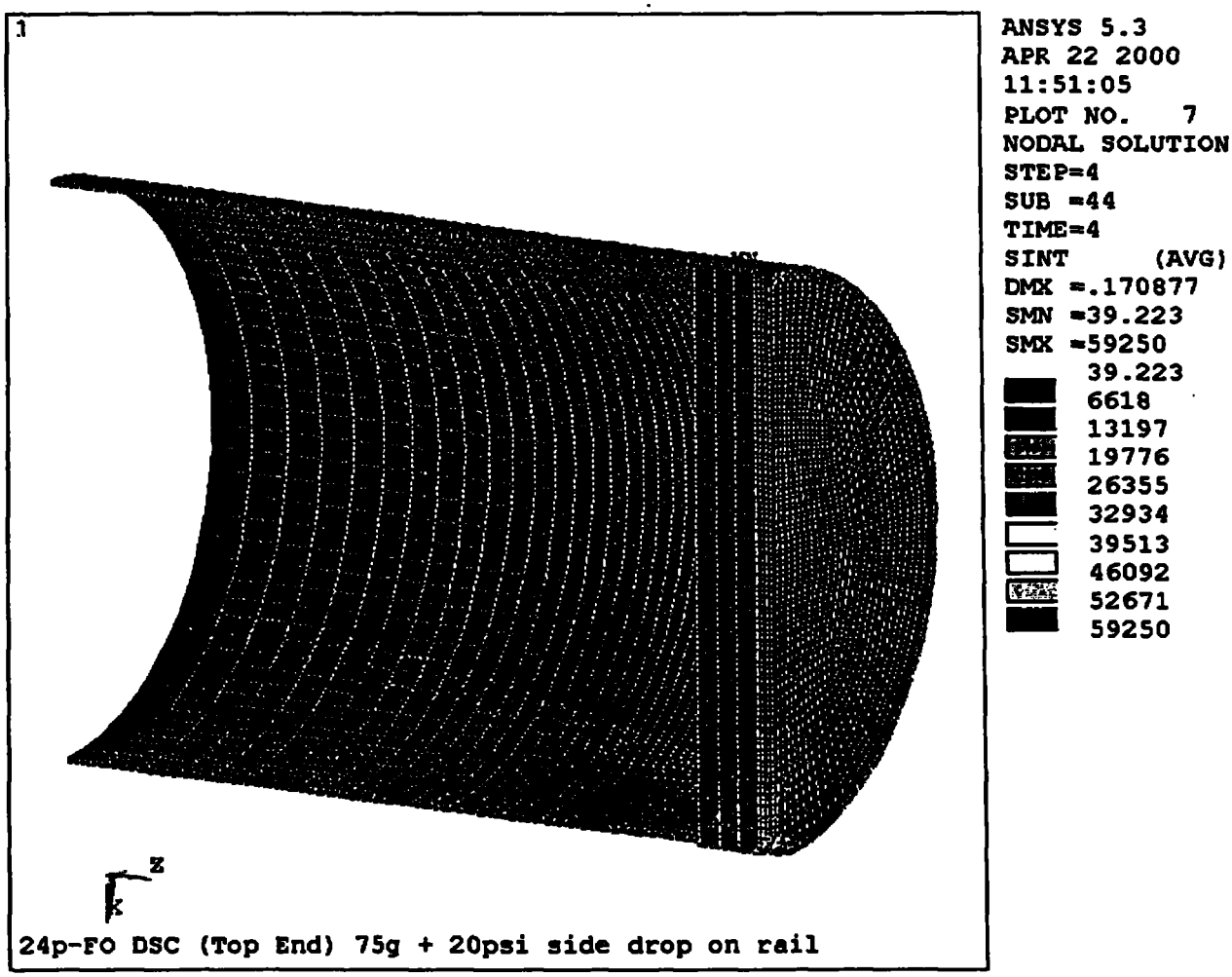

Figure B8-3

24P-FO DSC Shell Assembly, Top End Components

Stress Intensity Contour

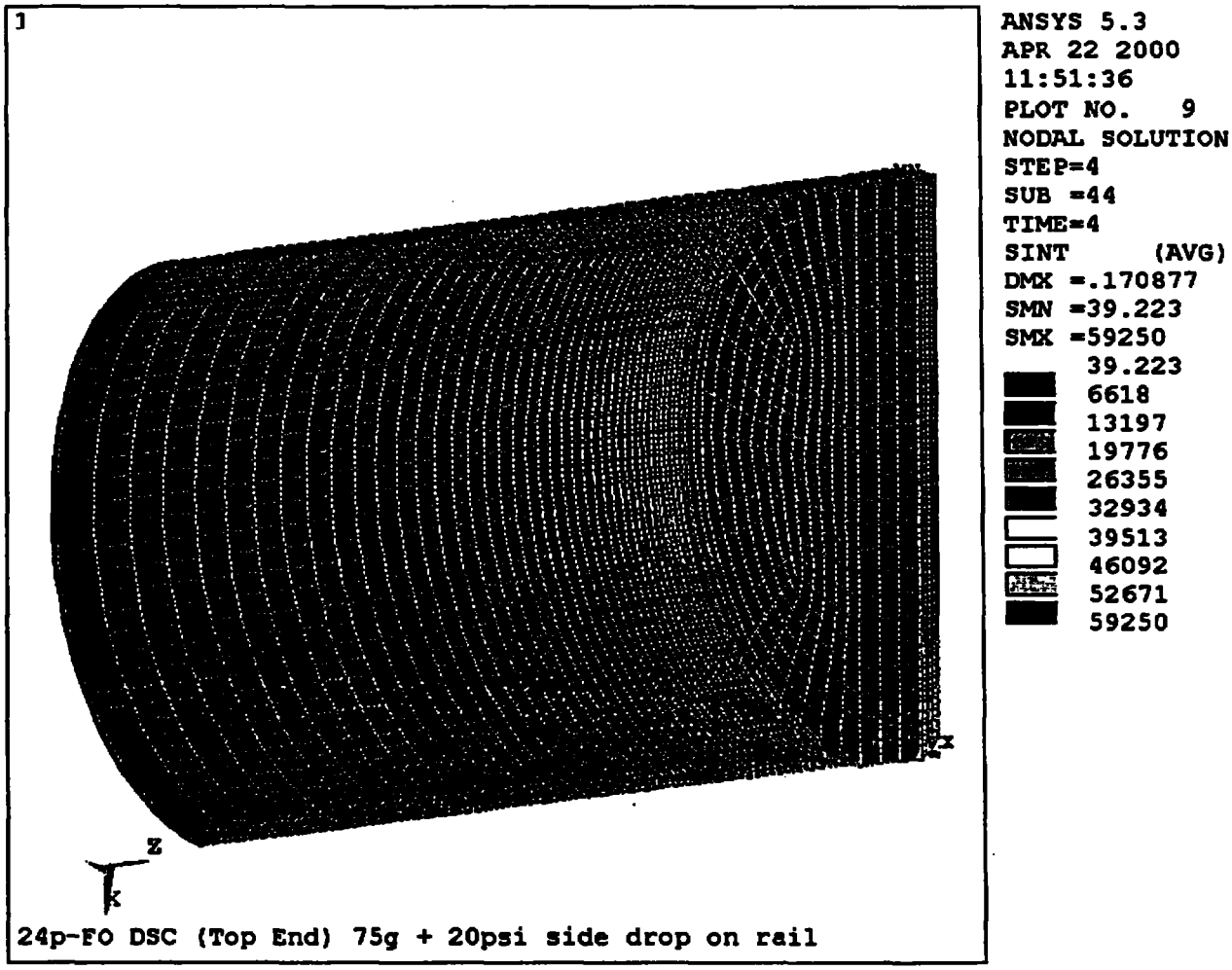

Figure B8-4

24P-FO DSC Shell Assembly, Top End Components

Stress Intensity Contour

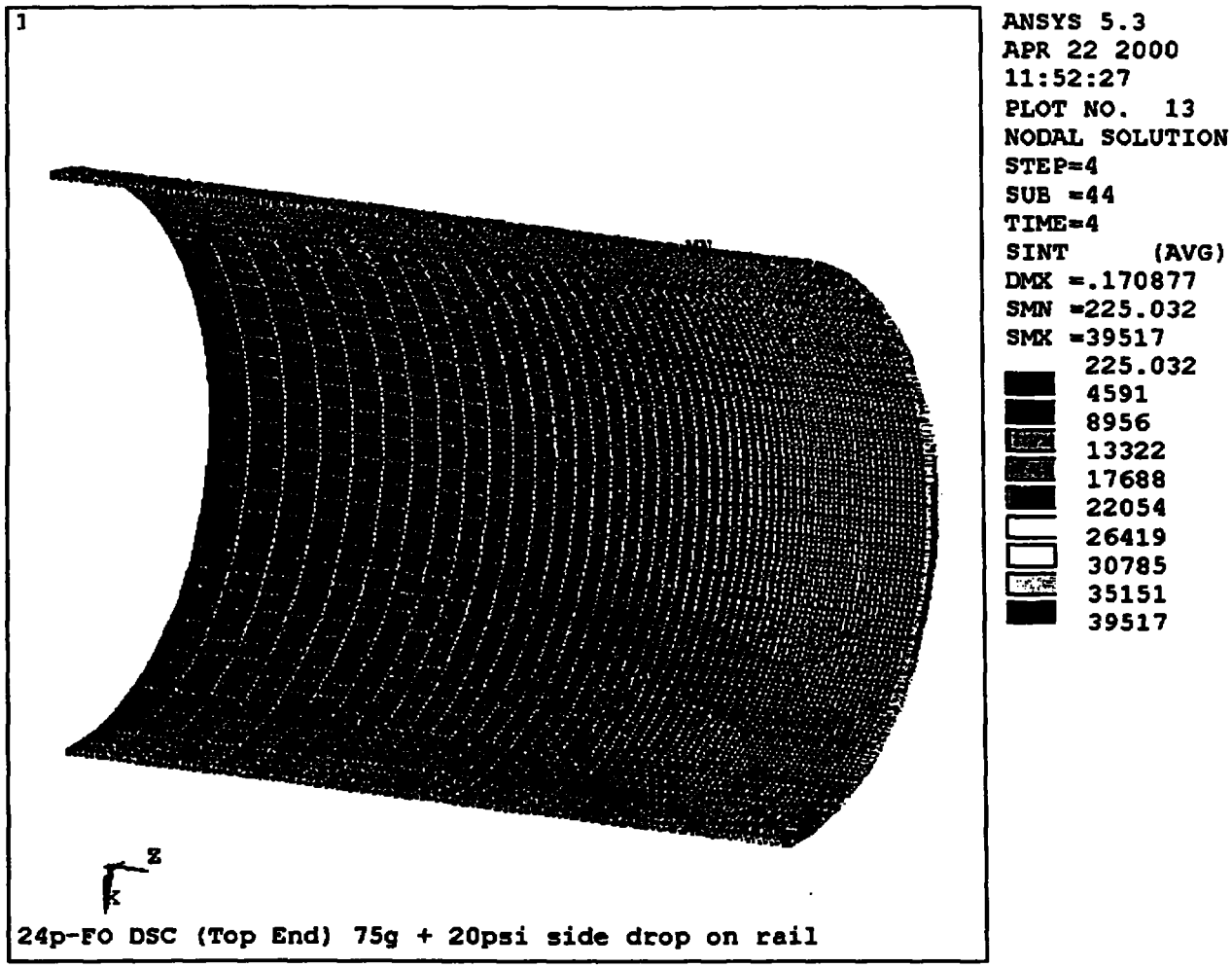

Figure B8-5

24P-FO DSC Shell Assembly, Cylindrical Shell (Top Half)

Stress Intensity Contour

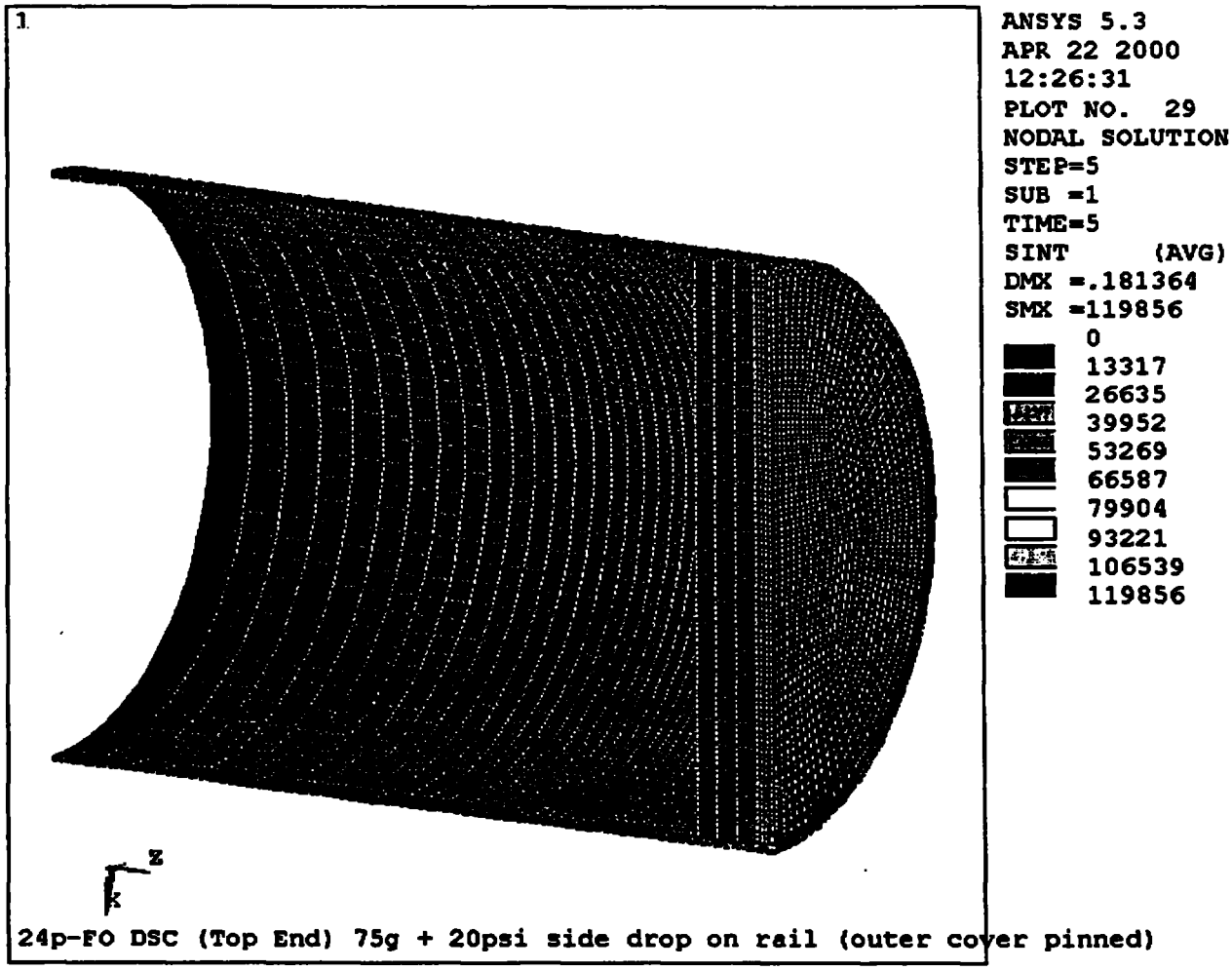

Figure B8-6

24P-FO DSC Shell Assembly, Top End Components

Stress Intensity Contour

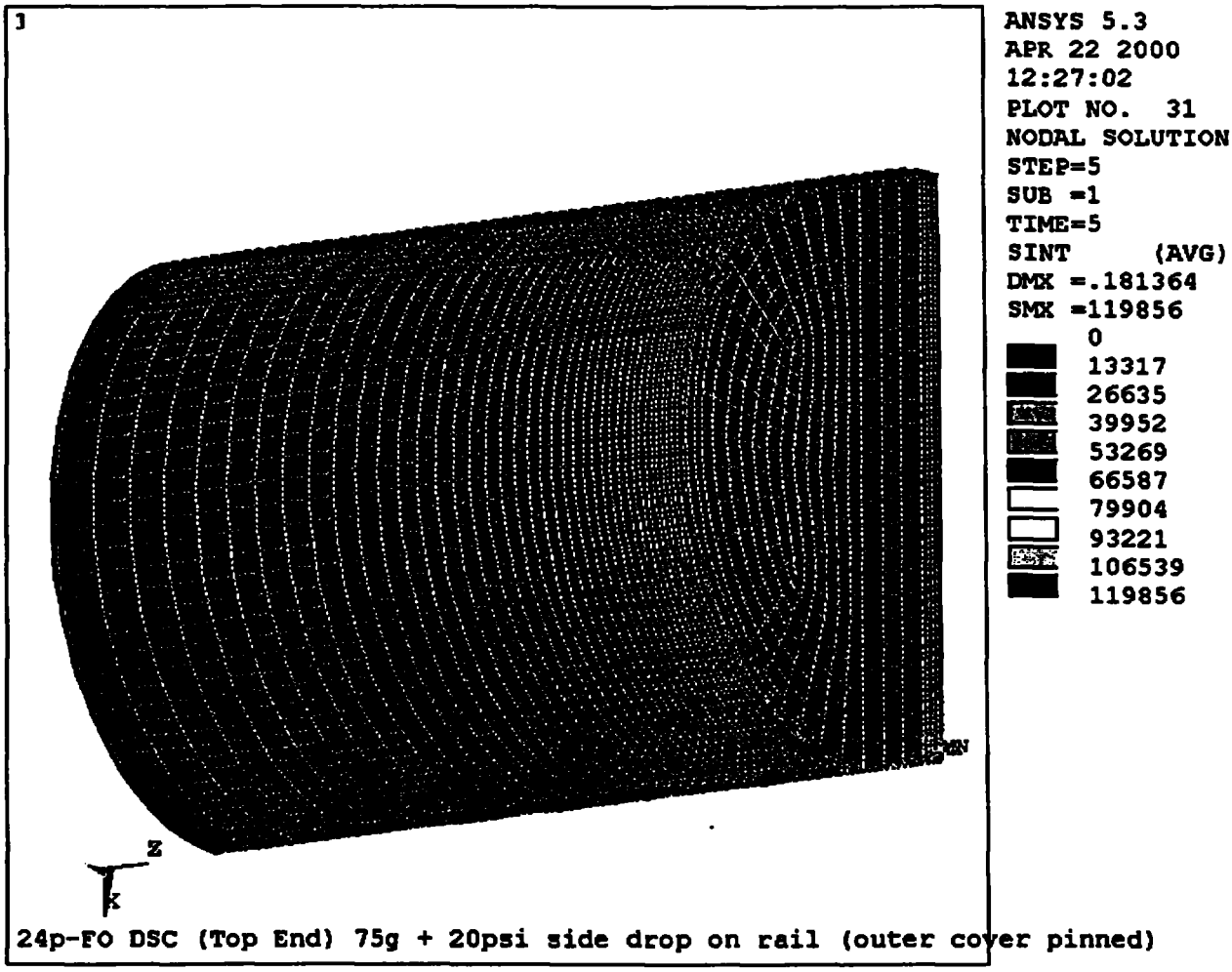

Figure B8-7

24P-FO DSC Shell Assembly, Top End Components

Stress Intensity Contour

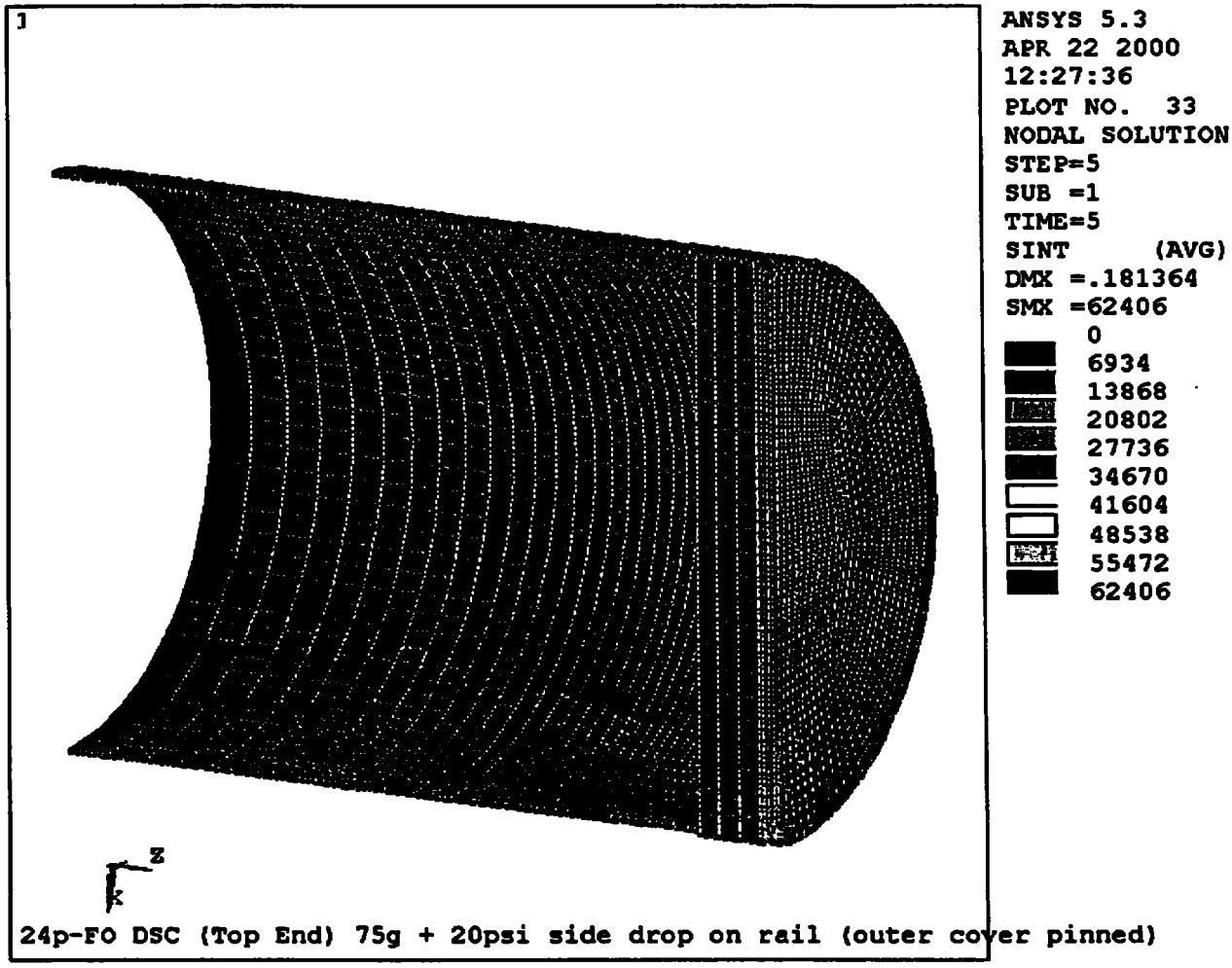

Figure B8-8

24P-FO DSC Shell Assembly, Top End Components

Stress Intensity Contour

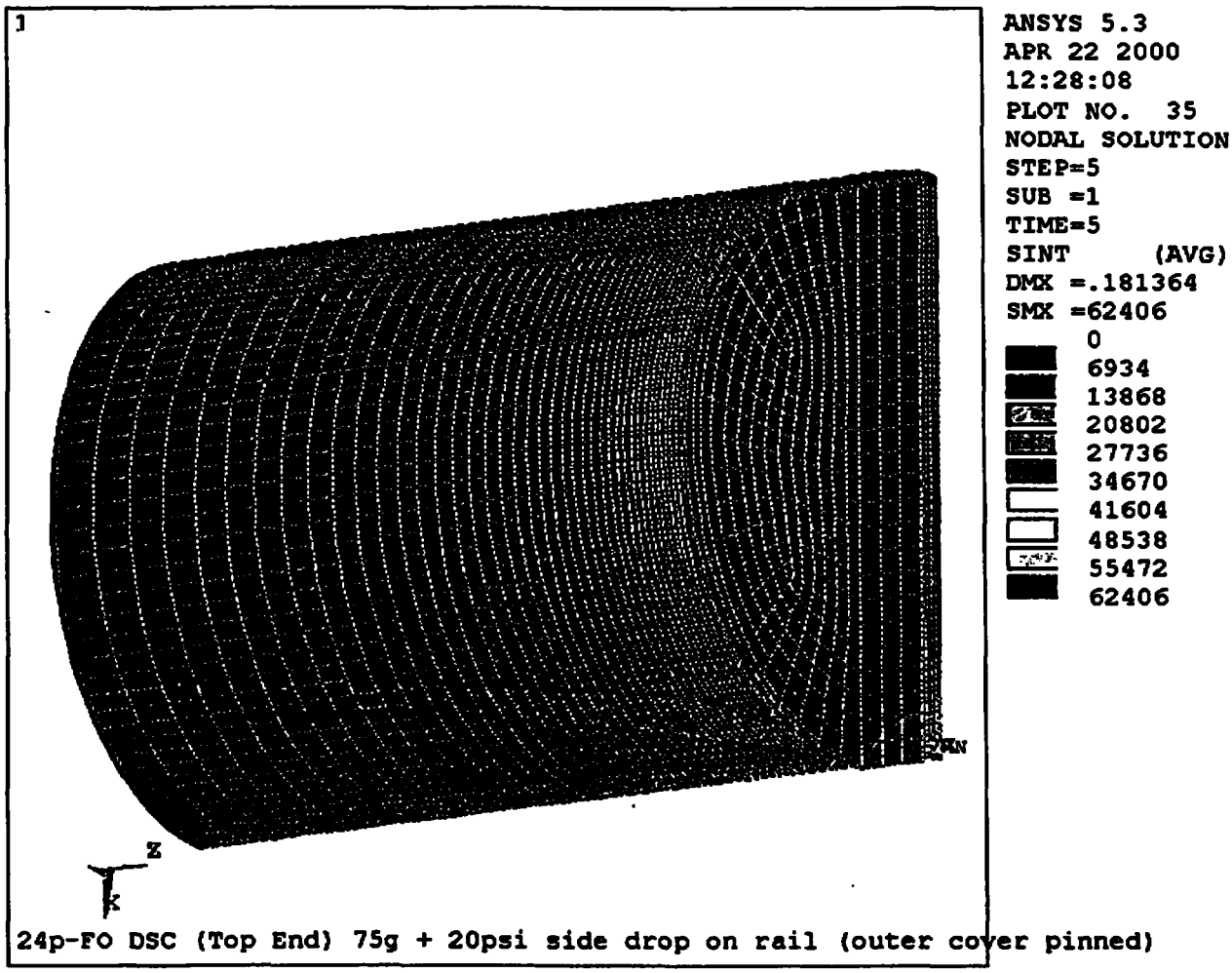

Figure B8-9

24P-FO DSC Shell Assembly, Top End Components

Stress Intensity Contour

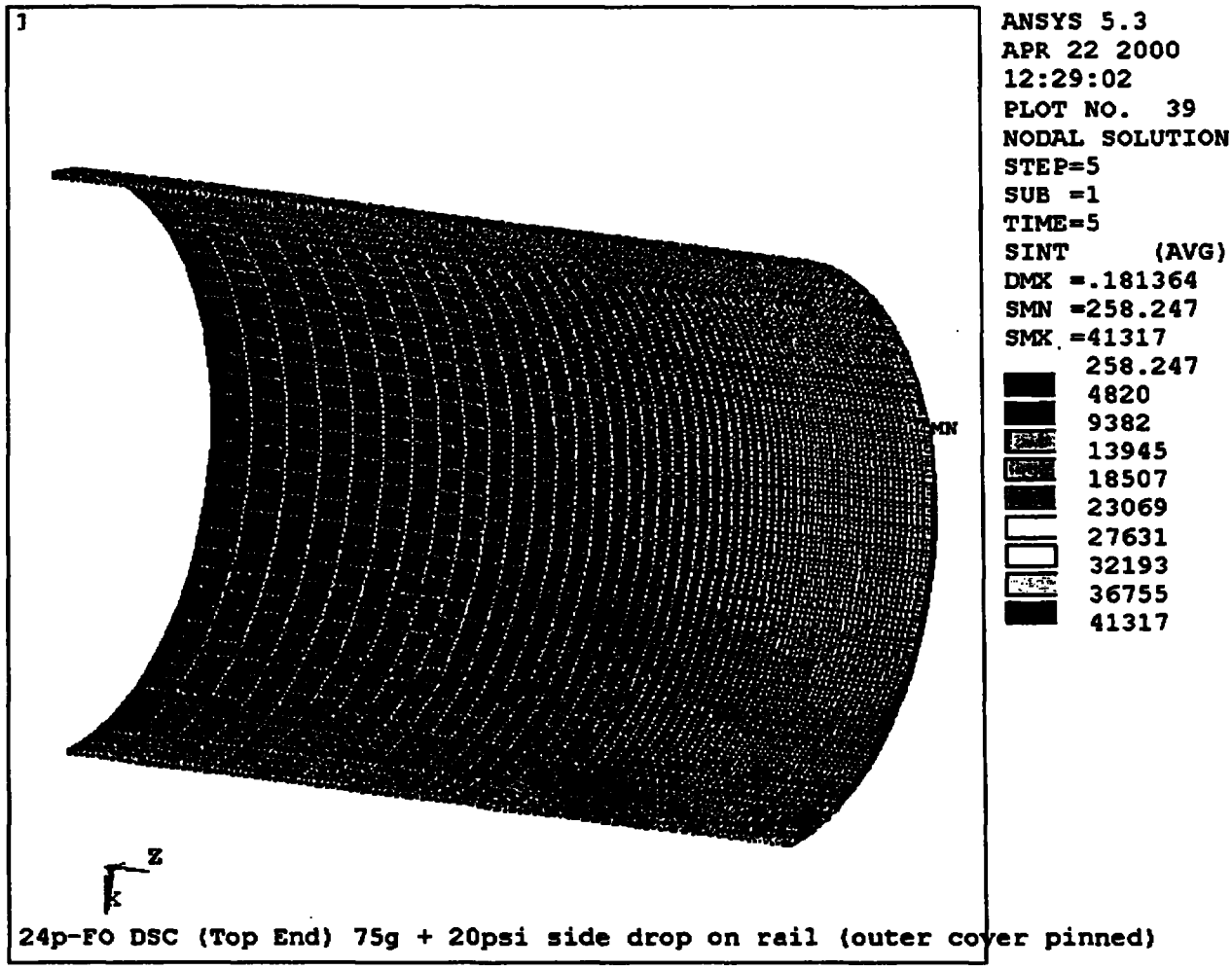

Figure B8-10

24P-FO DSC Shell Assembly, Cylindrical Shell (Top Half)

Stress Intensity Contour

Appendix B9

ANSYS Temperature and Stress Intensity Contour Plots for Run PT24PTH

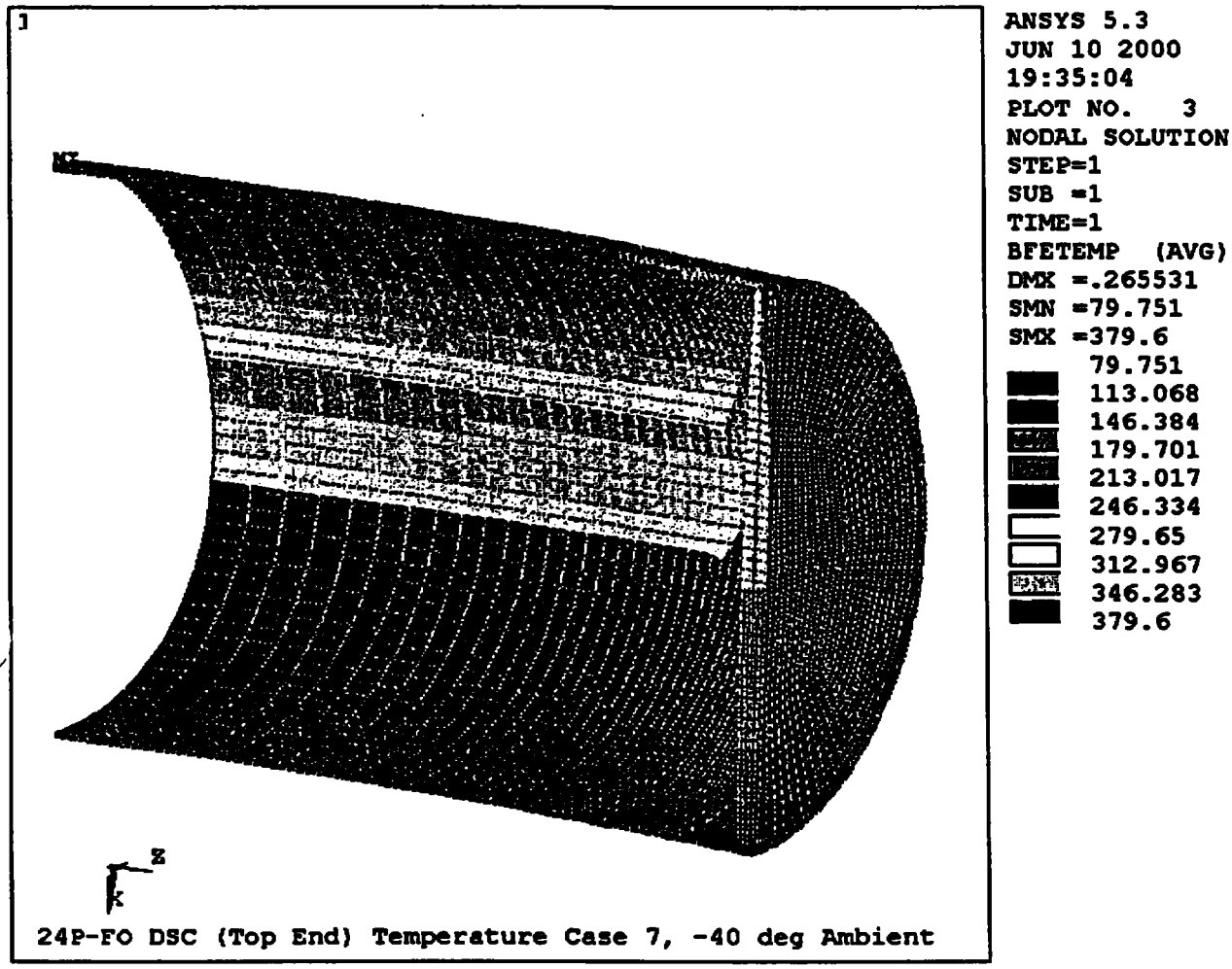

Figure B9-1

24P-FO DSC Shell Assembly, Top End Components

Temperature Contour

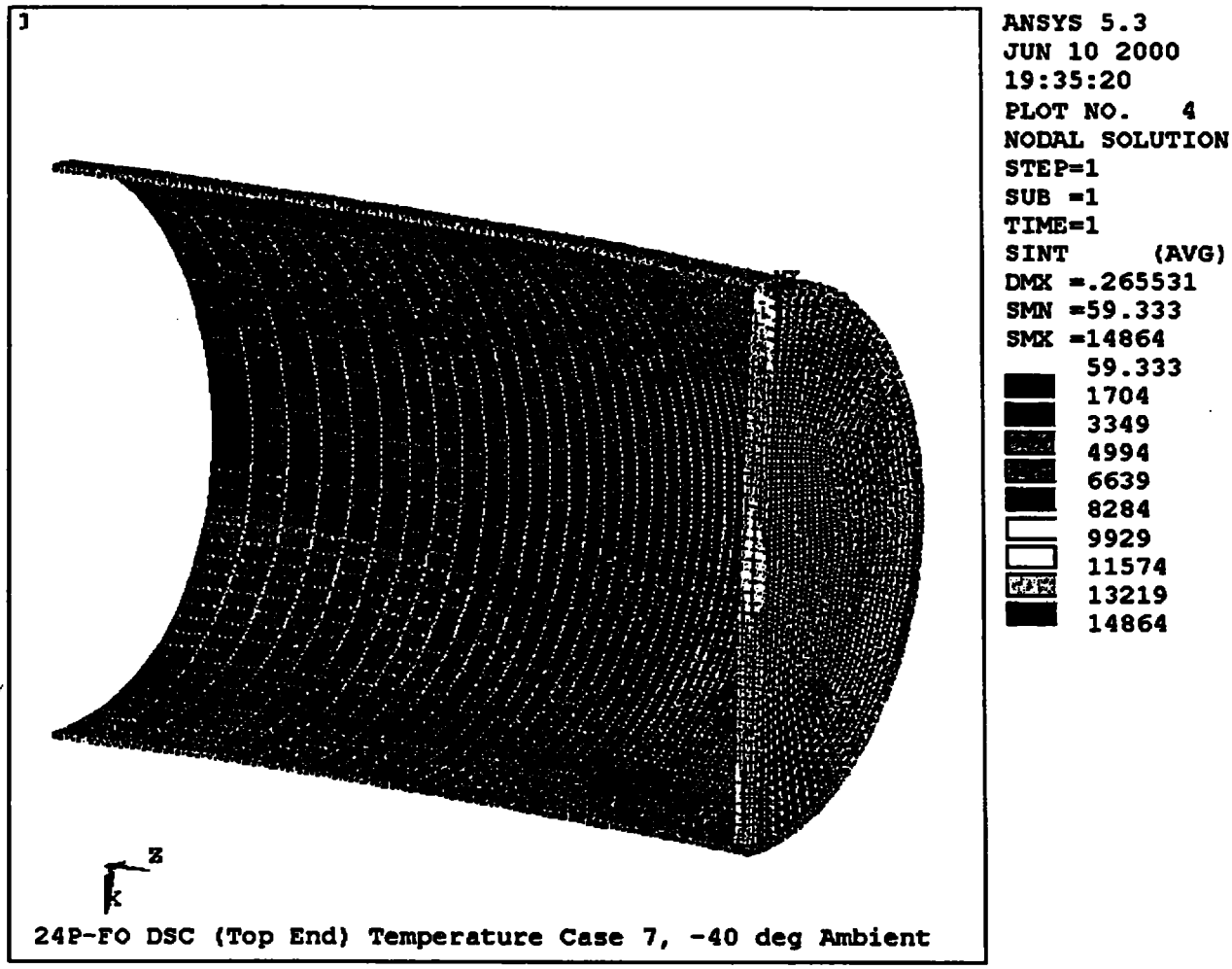

Figure B9-2

24P-FO DSC Shell Assembly, Top End Components

Stress Intensity Contour

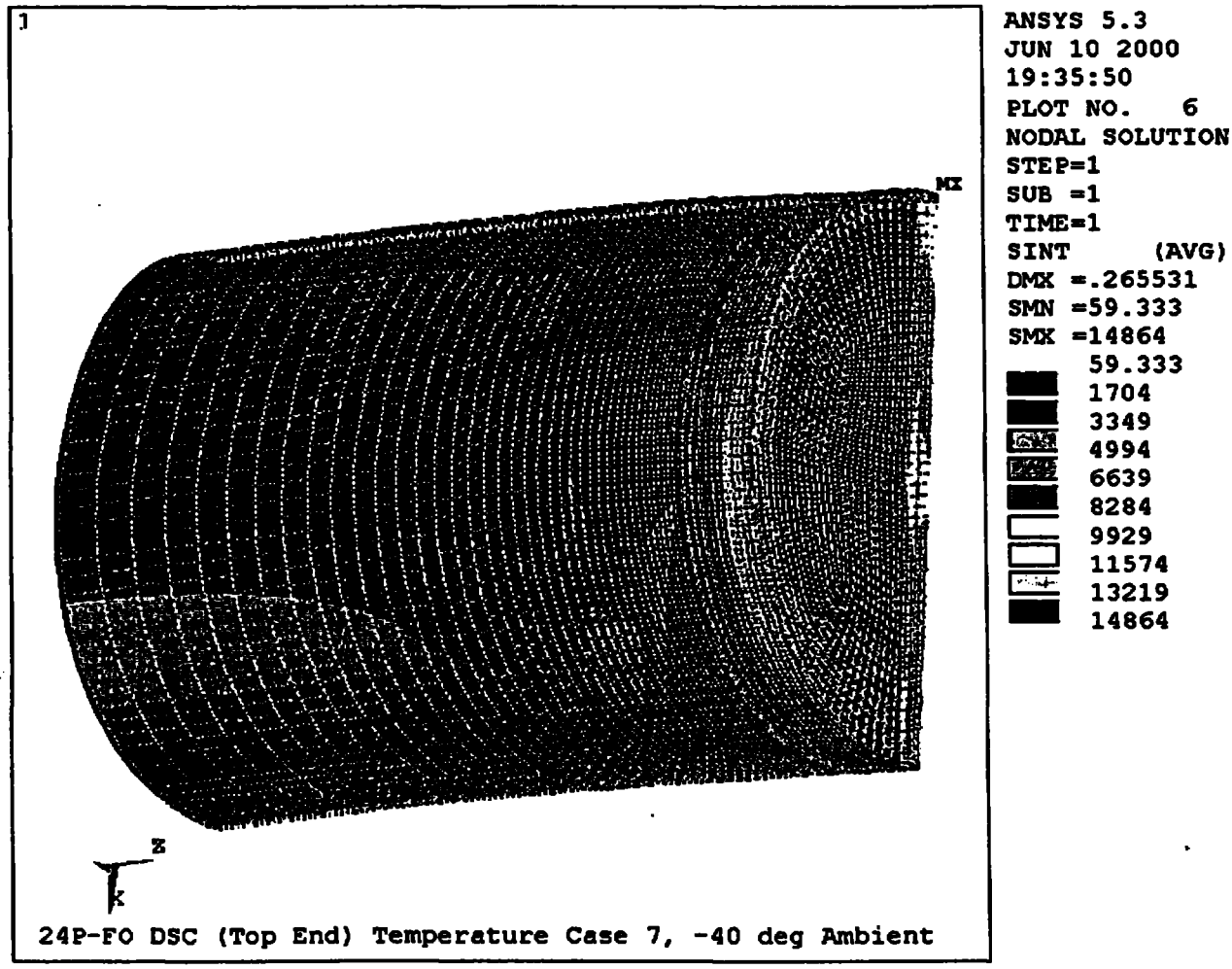

Figure B9-3

24P-FO DSC Shell Assembly, Top End Components

Stress Intensity Contour

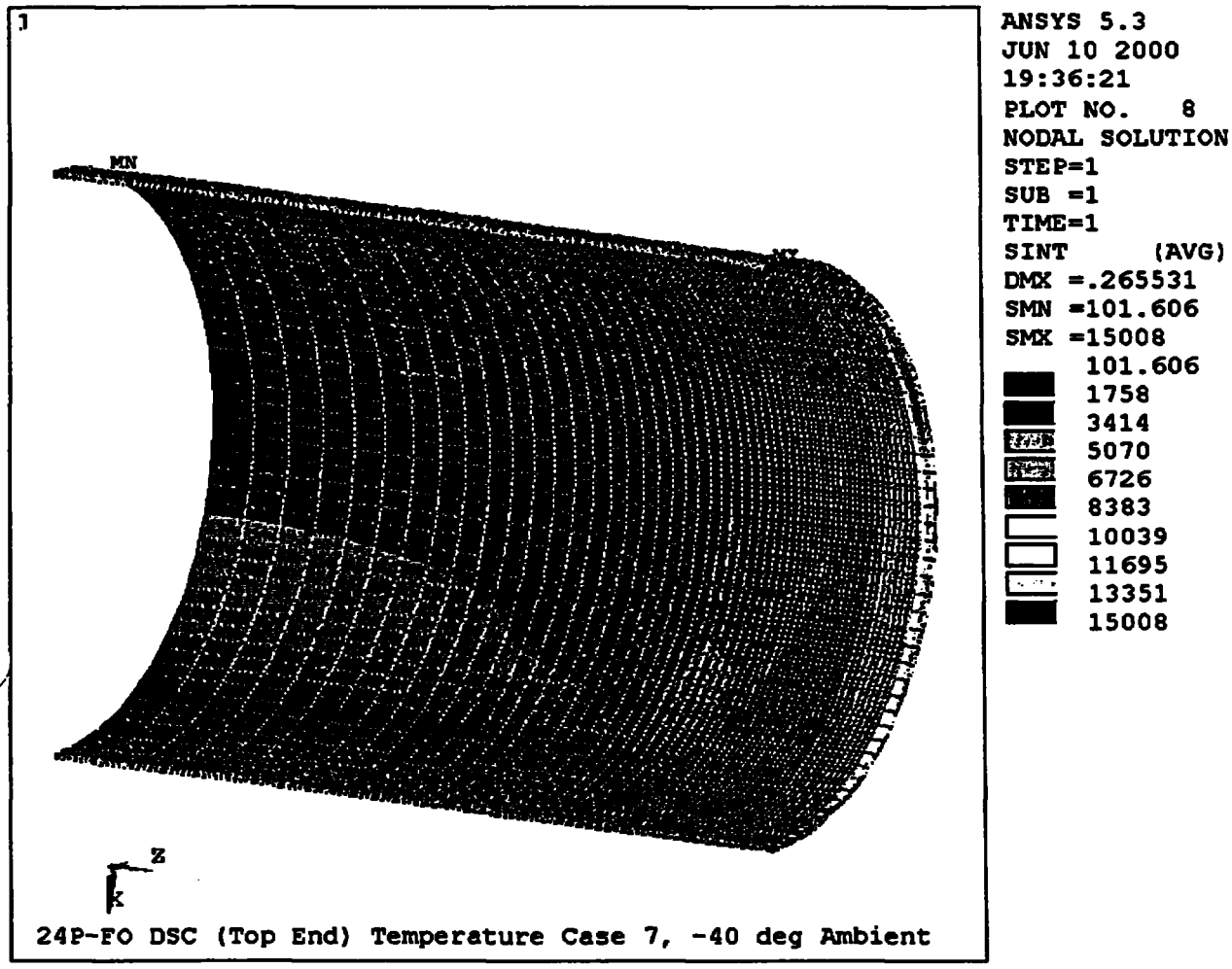

Figure B9-4

24P-FO DSC Shell Assembly, Cylindrical Shell (Top Half)

Stress Intensity Contour

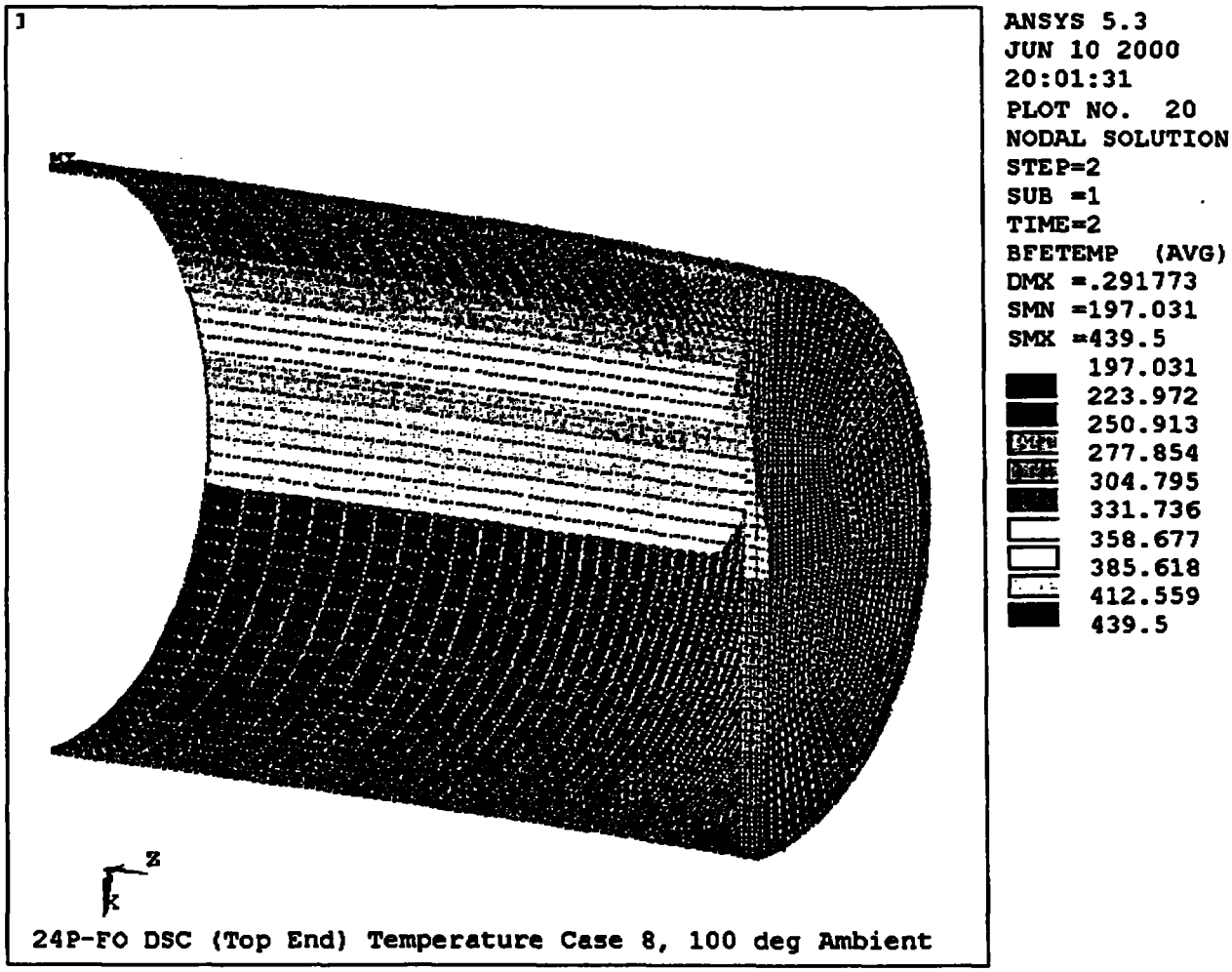

Figure B9-5

24P-FO DSC Shell Assembly, Top End Components

Temperature Contour

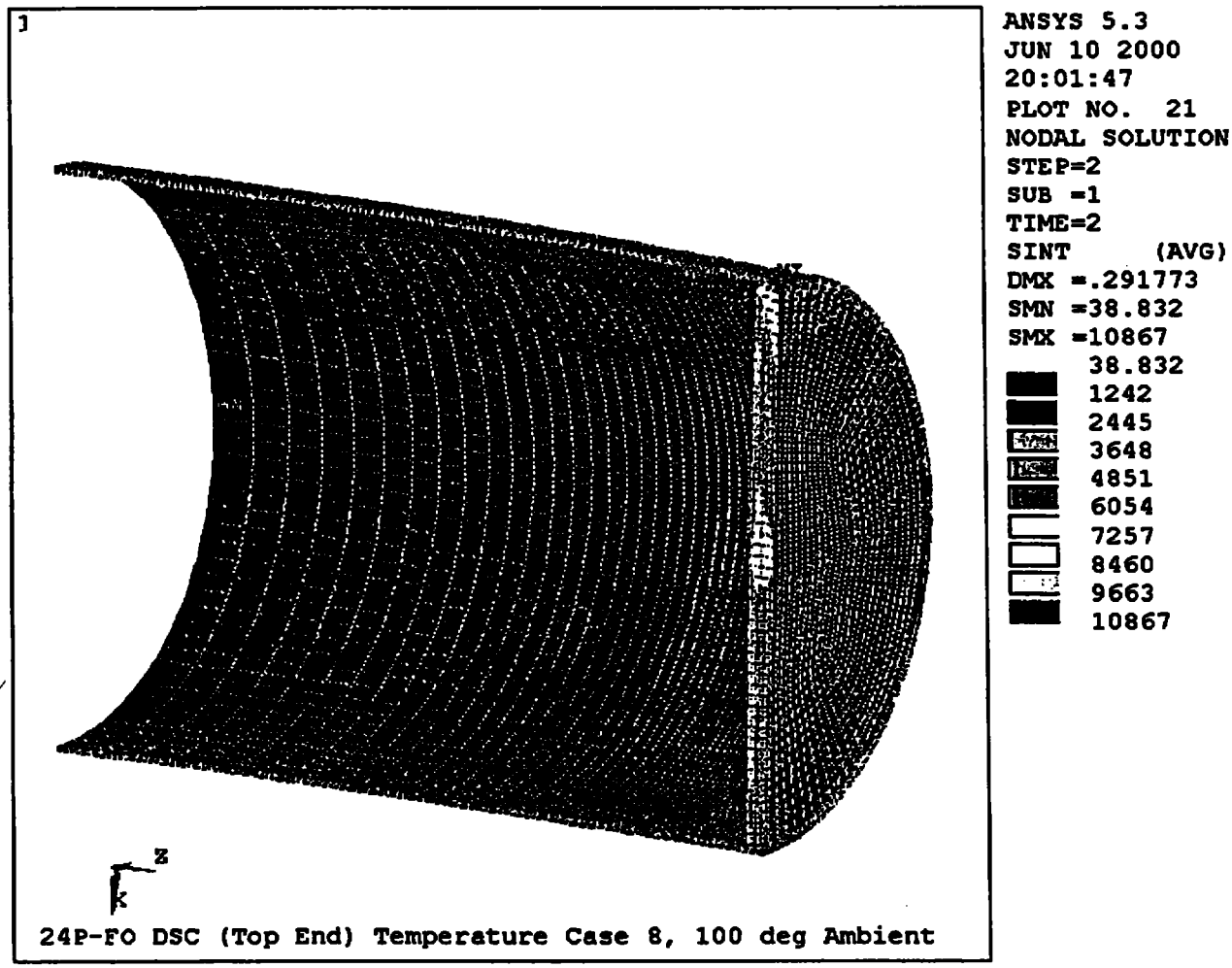

Figure B9-6

24P-FO DSC Shell Assembly, Top End Components

Stress Intensity Contour

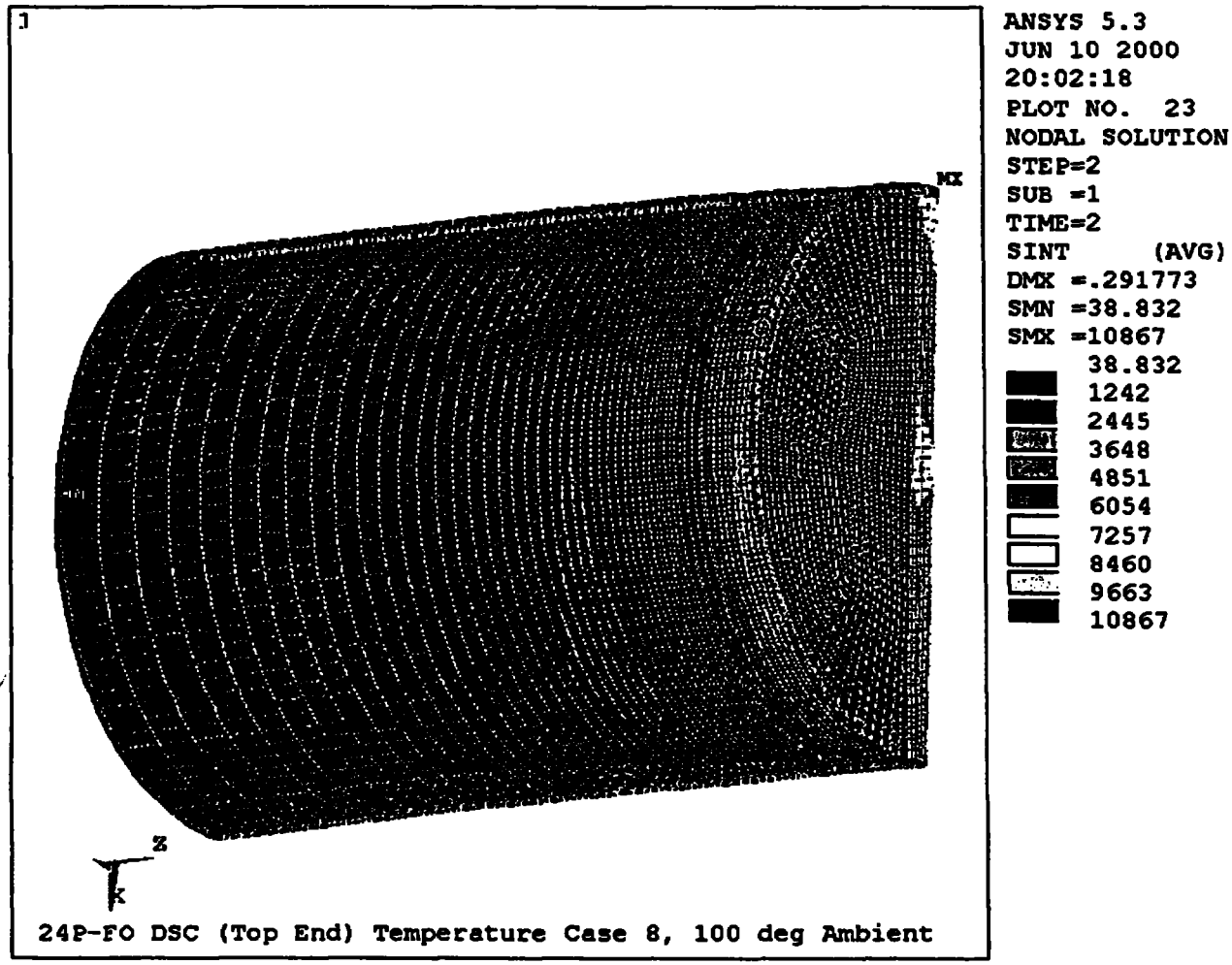

Figure B9-7

24P-FO DSC Shell Assembly, Top End Components

Stress Intensity Contour

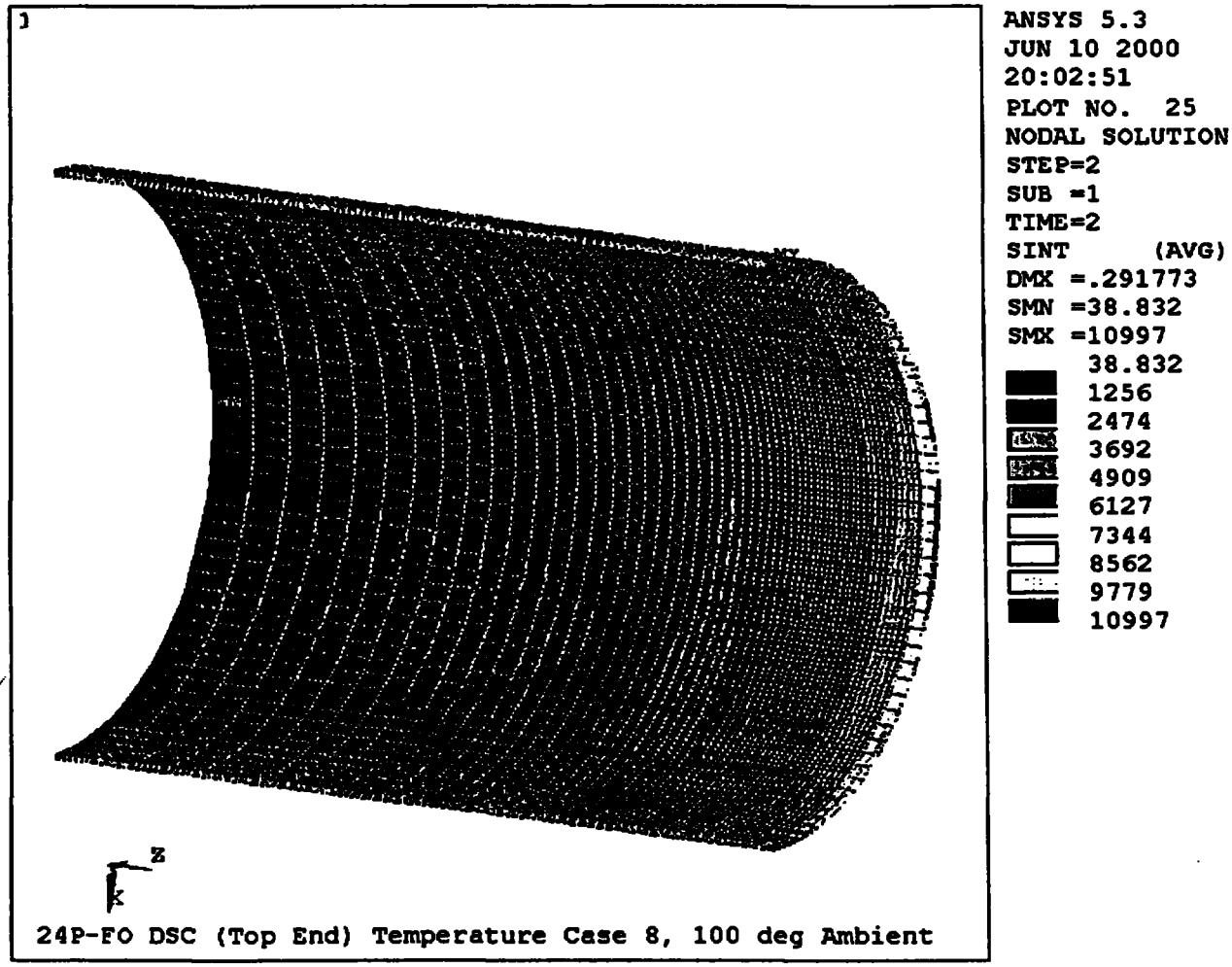

Figure B9-8

24P-FO DSC Shell Assembly, Cylindrical Shell (Top Half)

Stress Intensity Contour

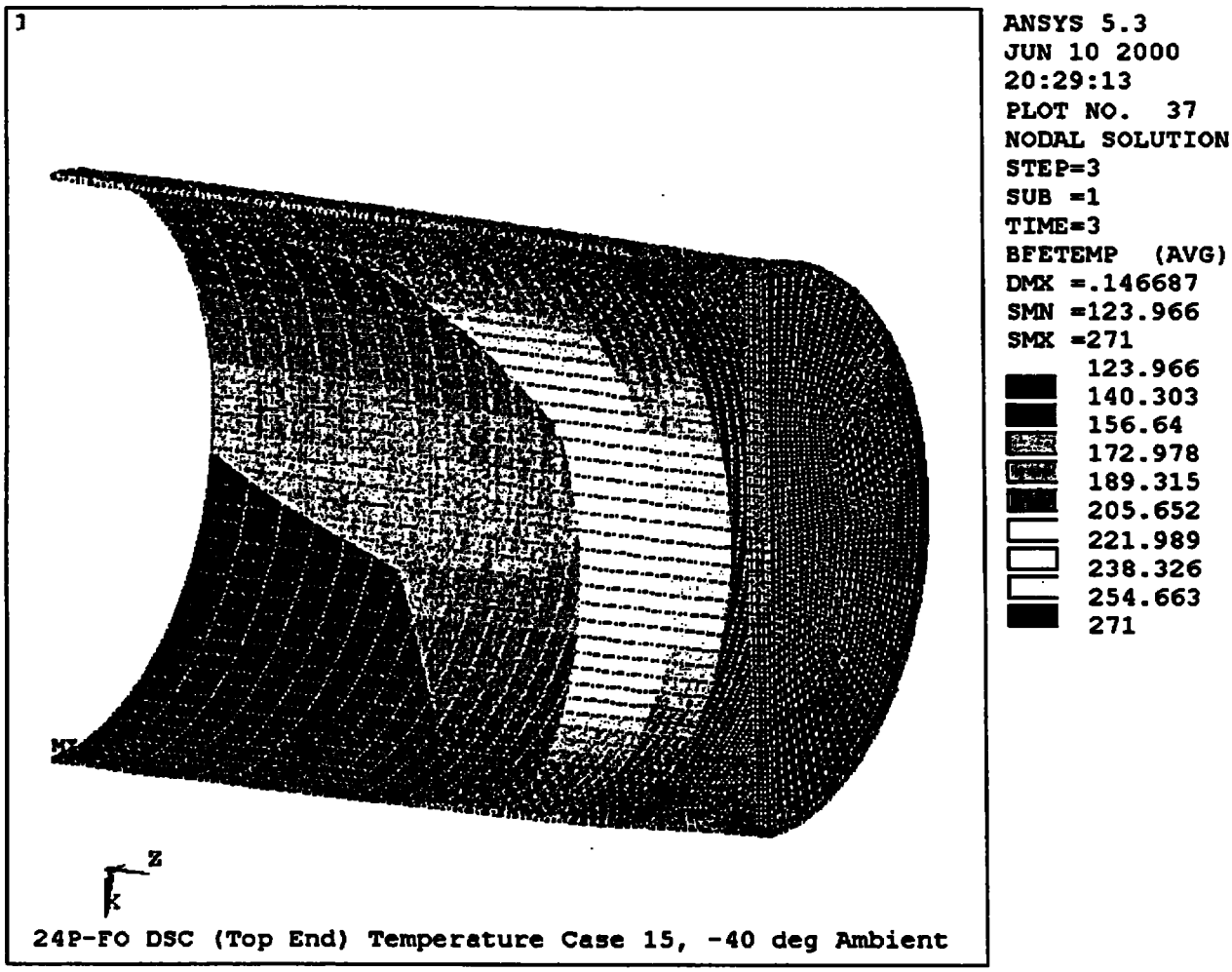

Figure B9-9

24P-FO DSC Shell Assembly, Top End Components

Temperature Contour

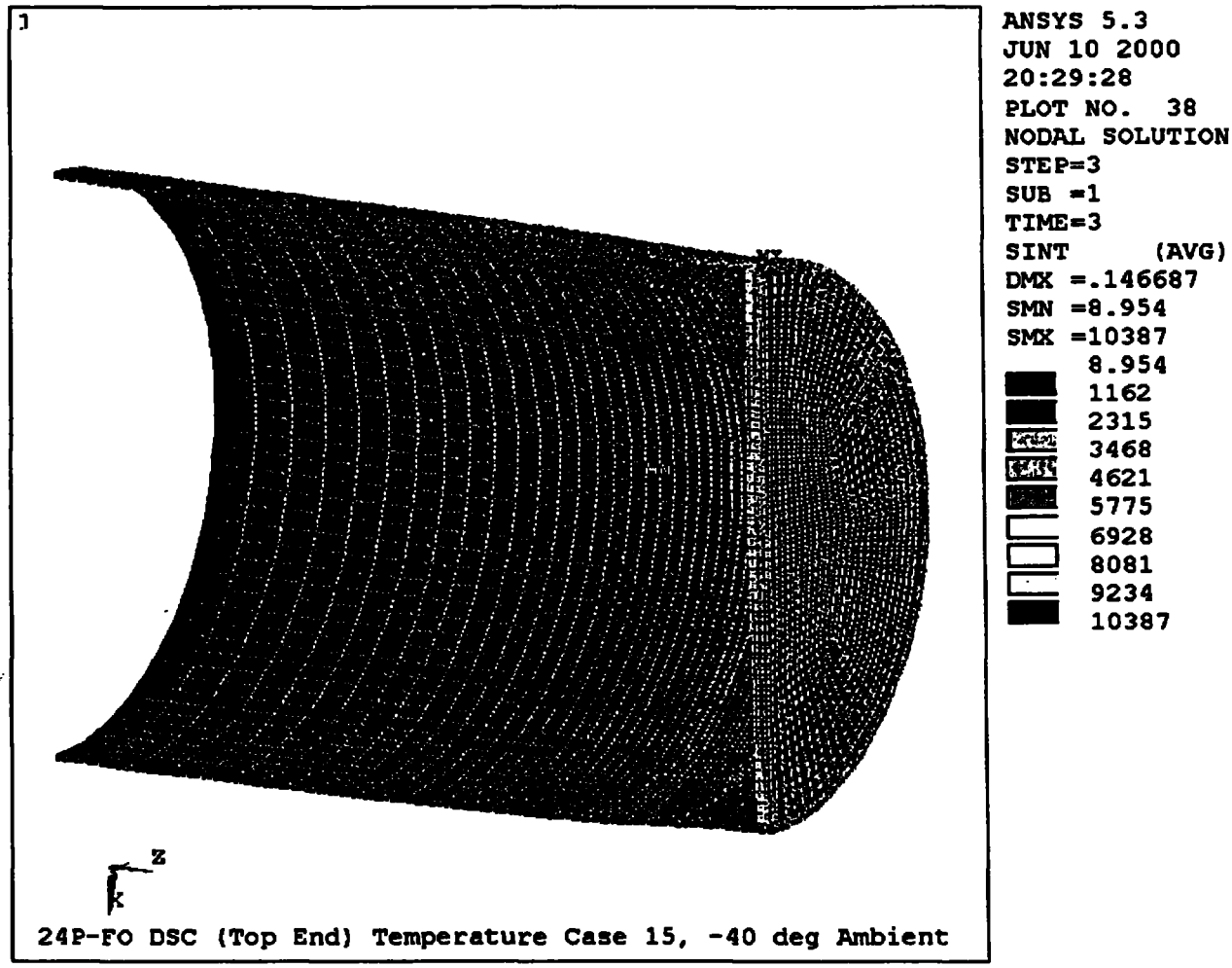

Figure B9-10

24P-FO DSC Shell Assembly, Top End Components

Stress Intensity Contour

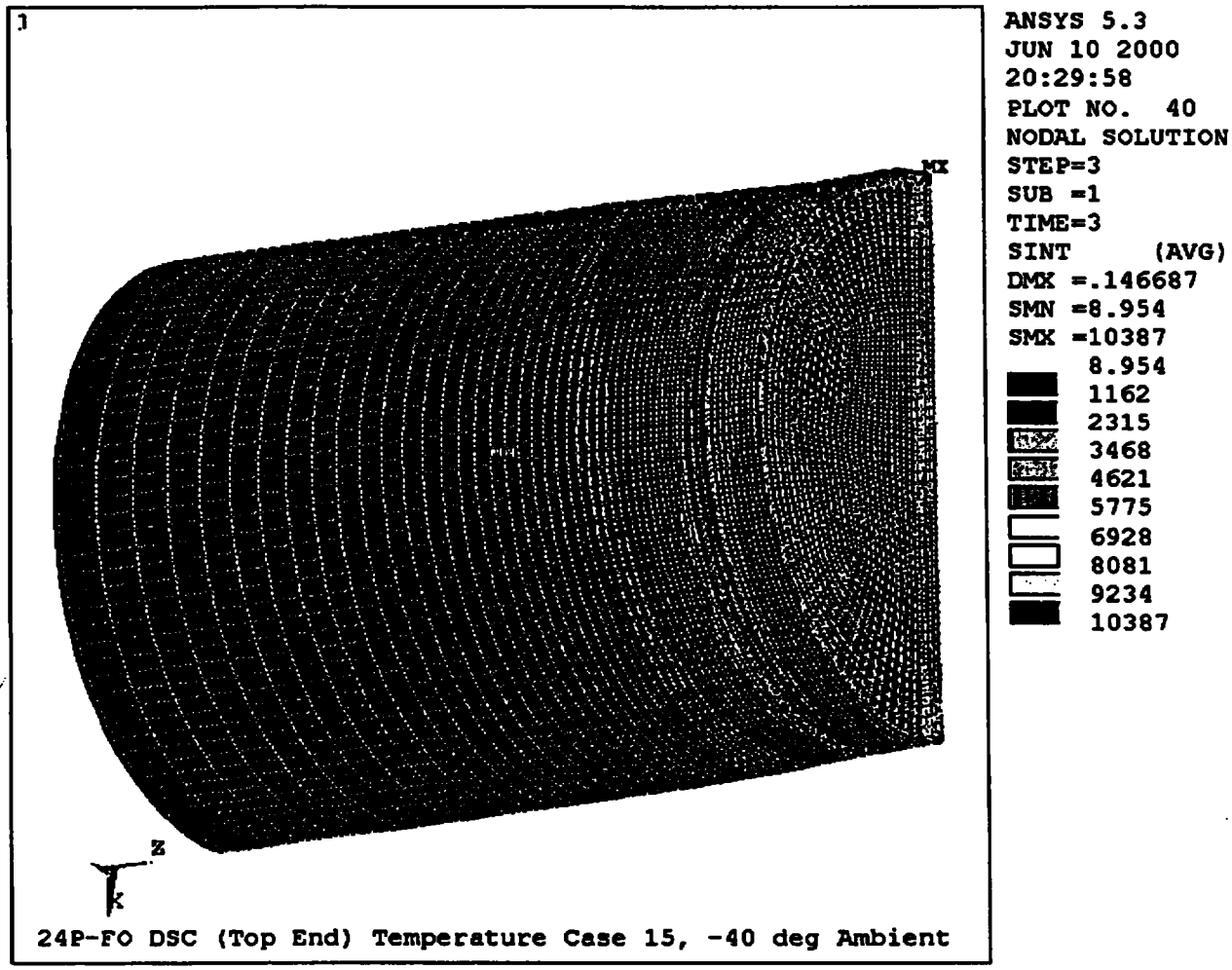

Figure B9-11

24P-FO DSC Shell Assembly, Top End Components

Stress Intensity Contour

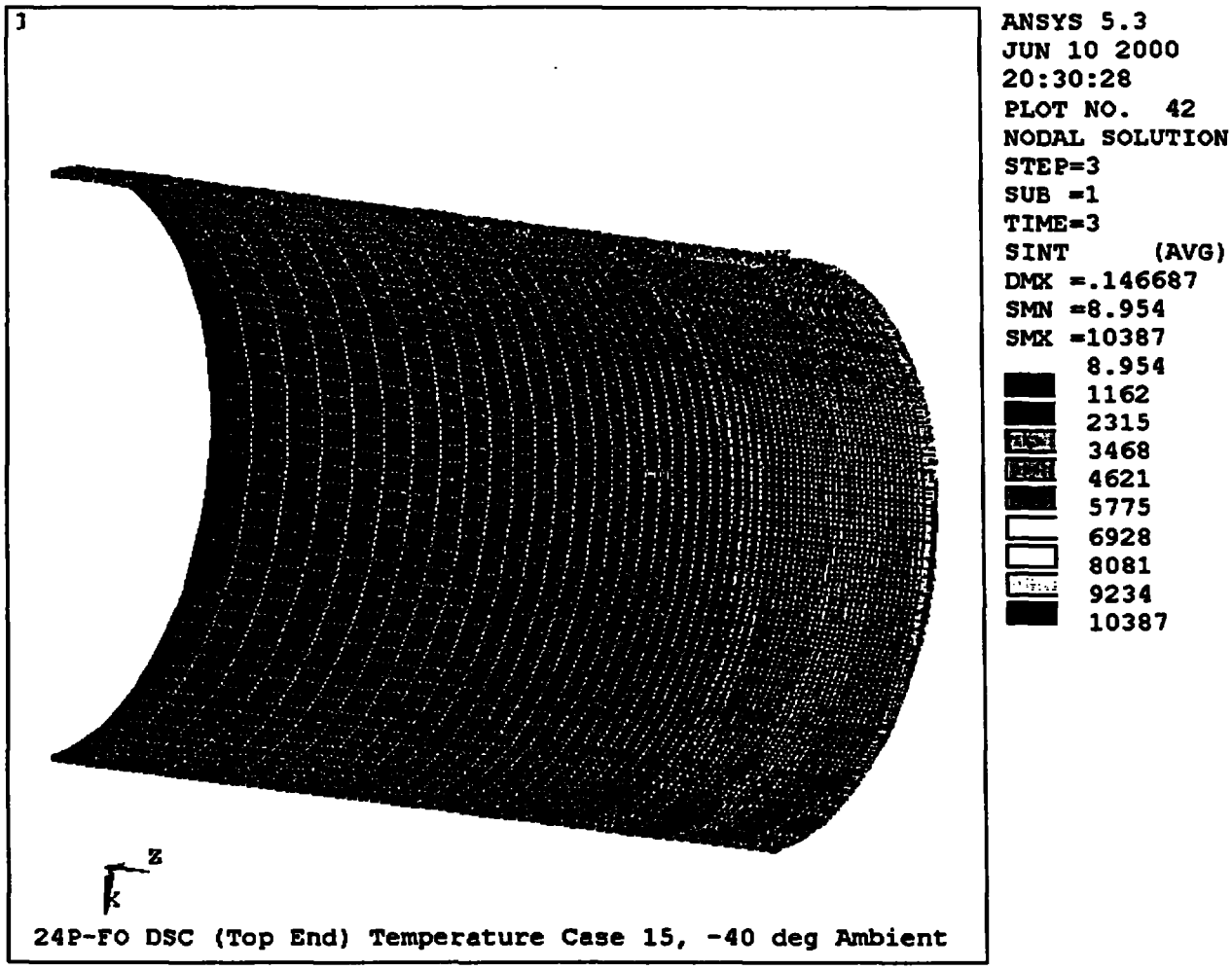

Figure B9-12

24P-FO DSC Shell Assembly, Cylindrical Shell (Top Half)

Stress Intensity Contour

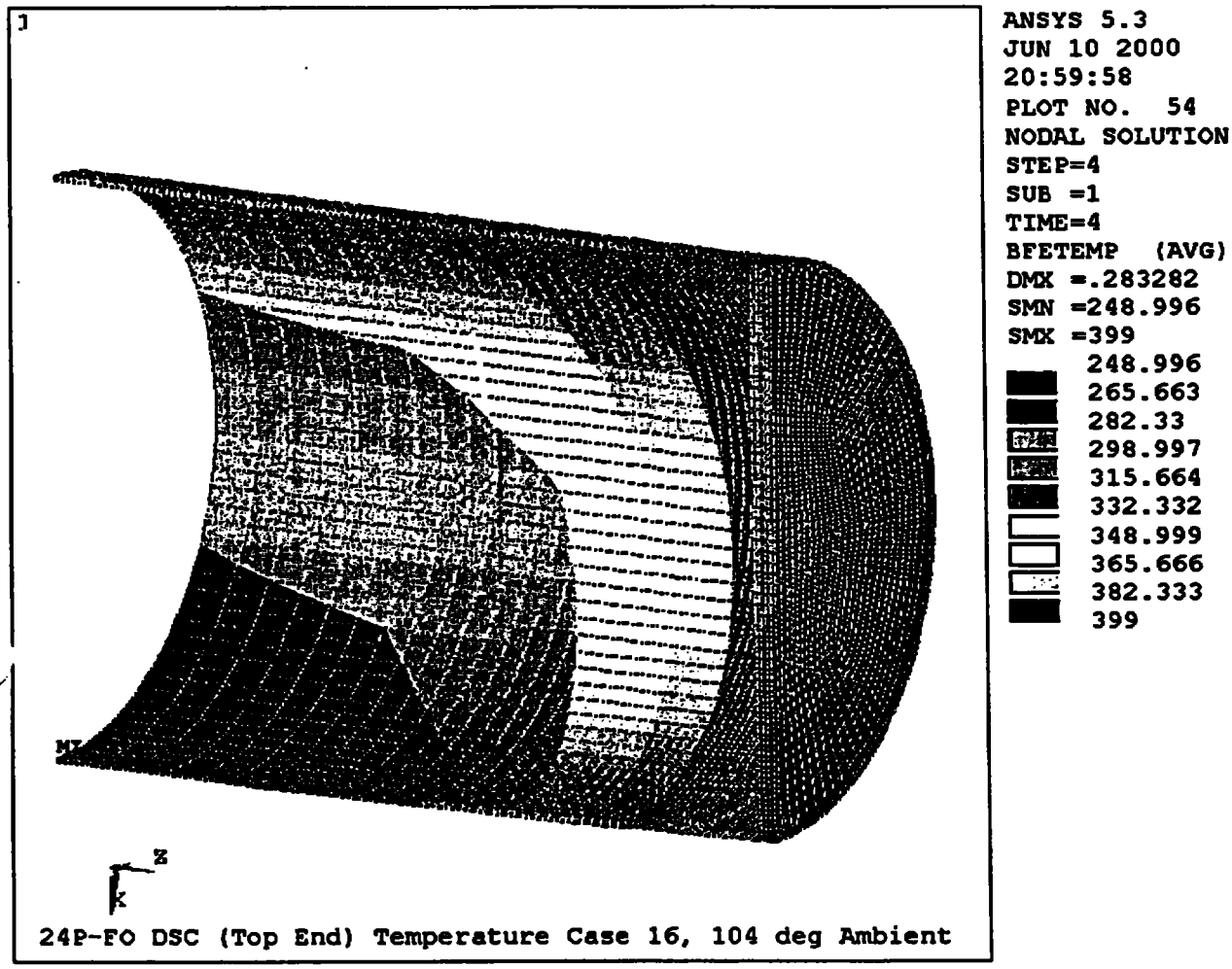

Figure B9-13

24P-FO DSC Shell Assembly, Top End Components

Temperature Contour

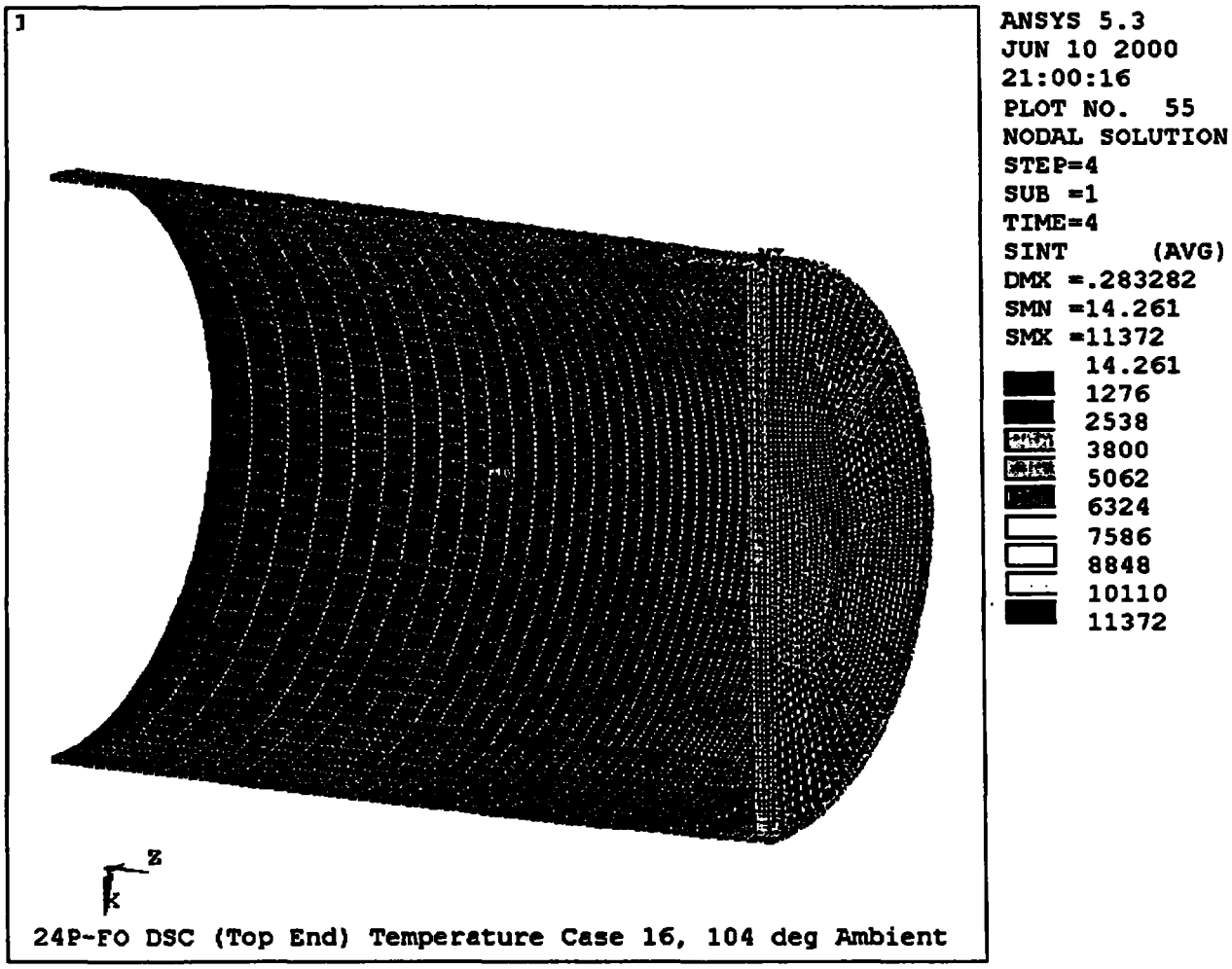

Figure B9-14

24P-FO DSC Shell Assembly, Top End Components

Stress Intensity Contour

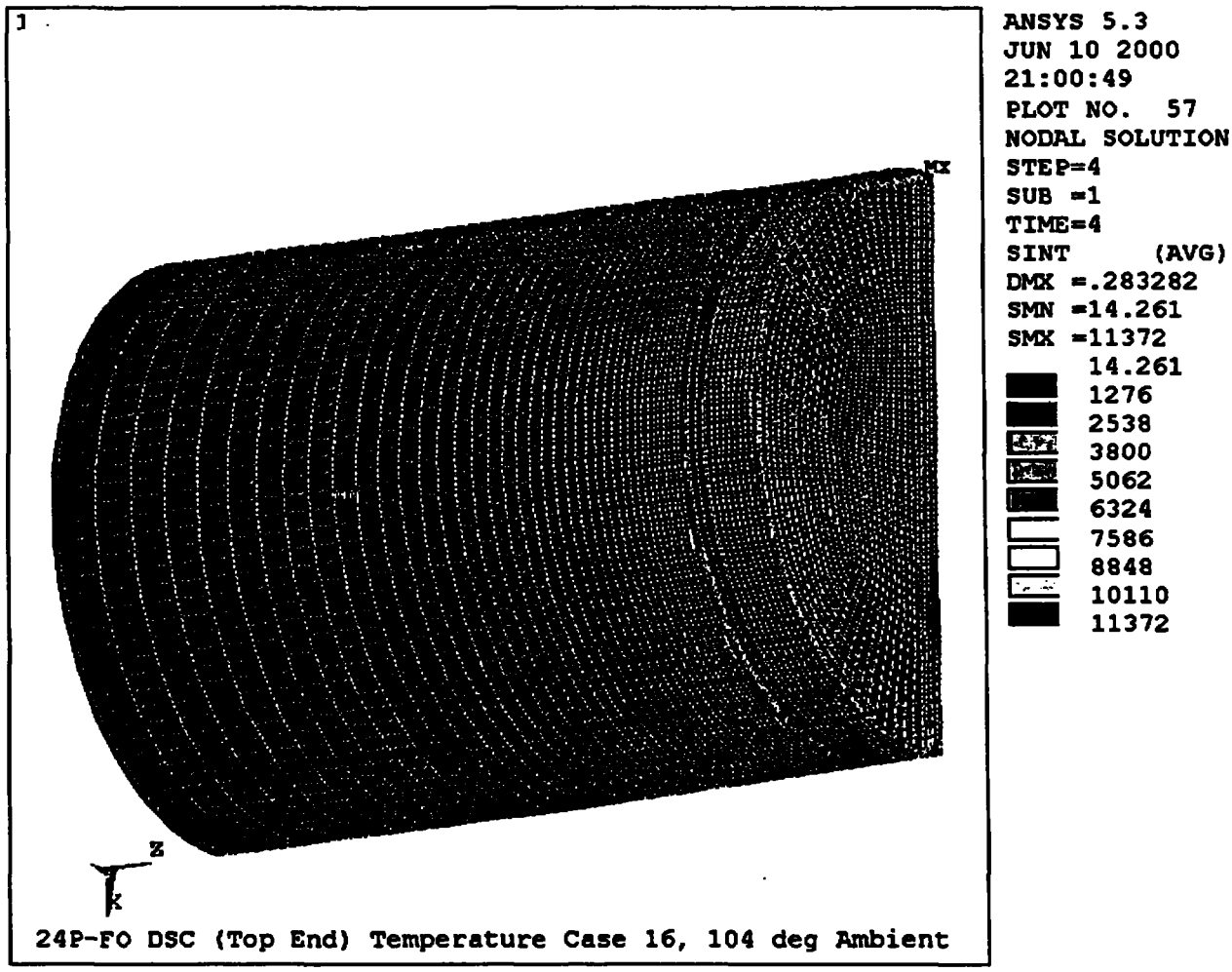

Figure B9-15

24P-FO DSC Shell Assembly, Top End Components

Stress Intensity Contour

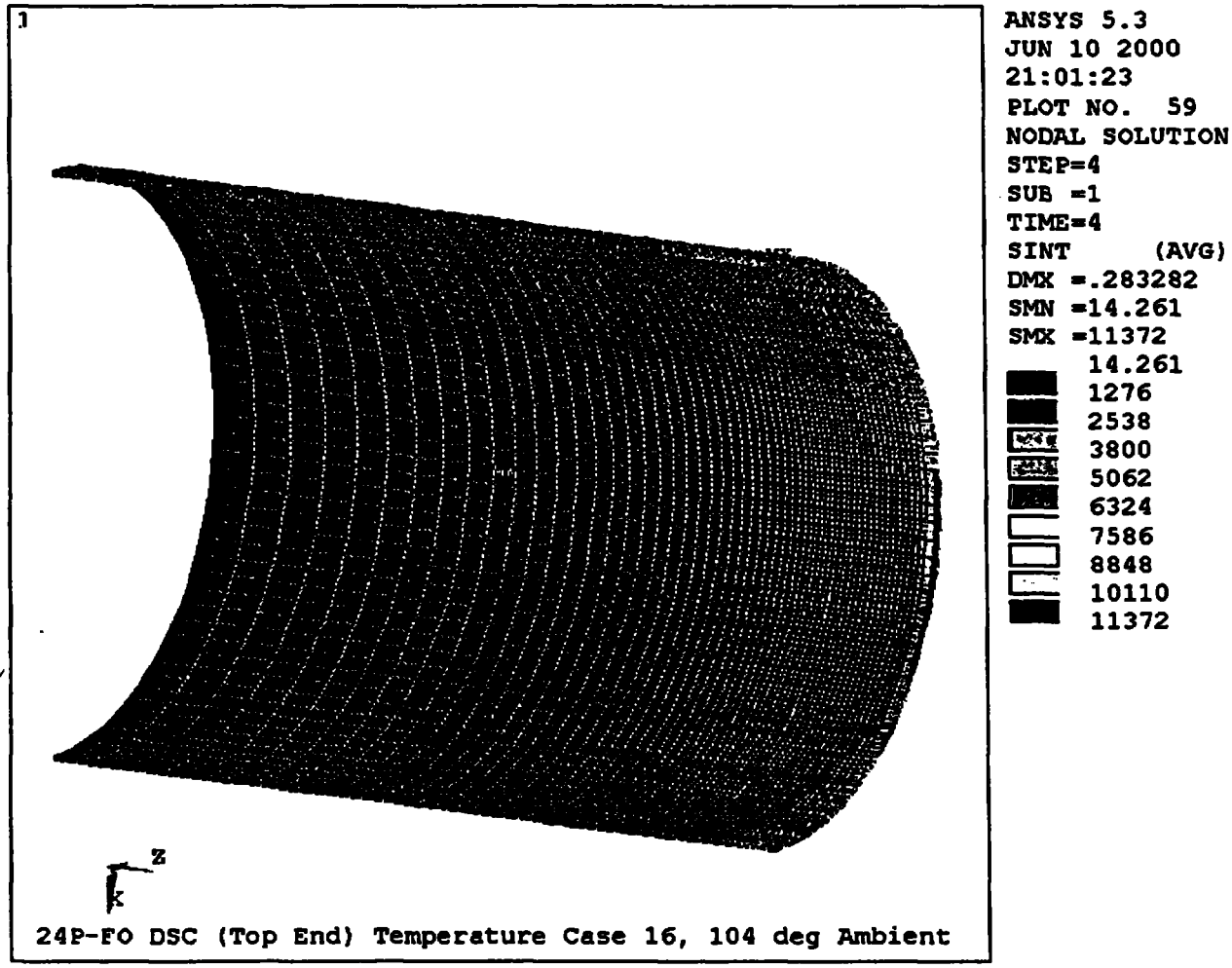

Figure B9-16

24P-FO DSC Shell Assembly, Cylindrical Shell (Top Half)

Stress Intensity Contour

Appendix B10

ANSYS Temperature and Stress Intensity Contour Plots for Run PT24PTH2

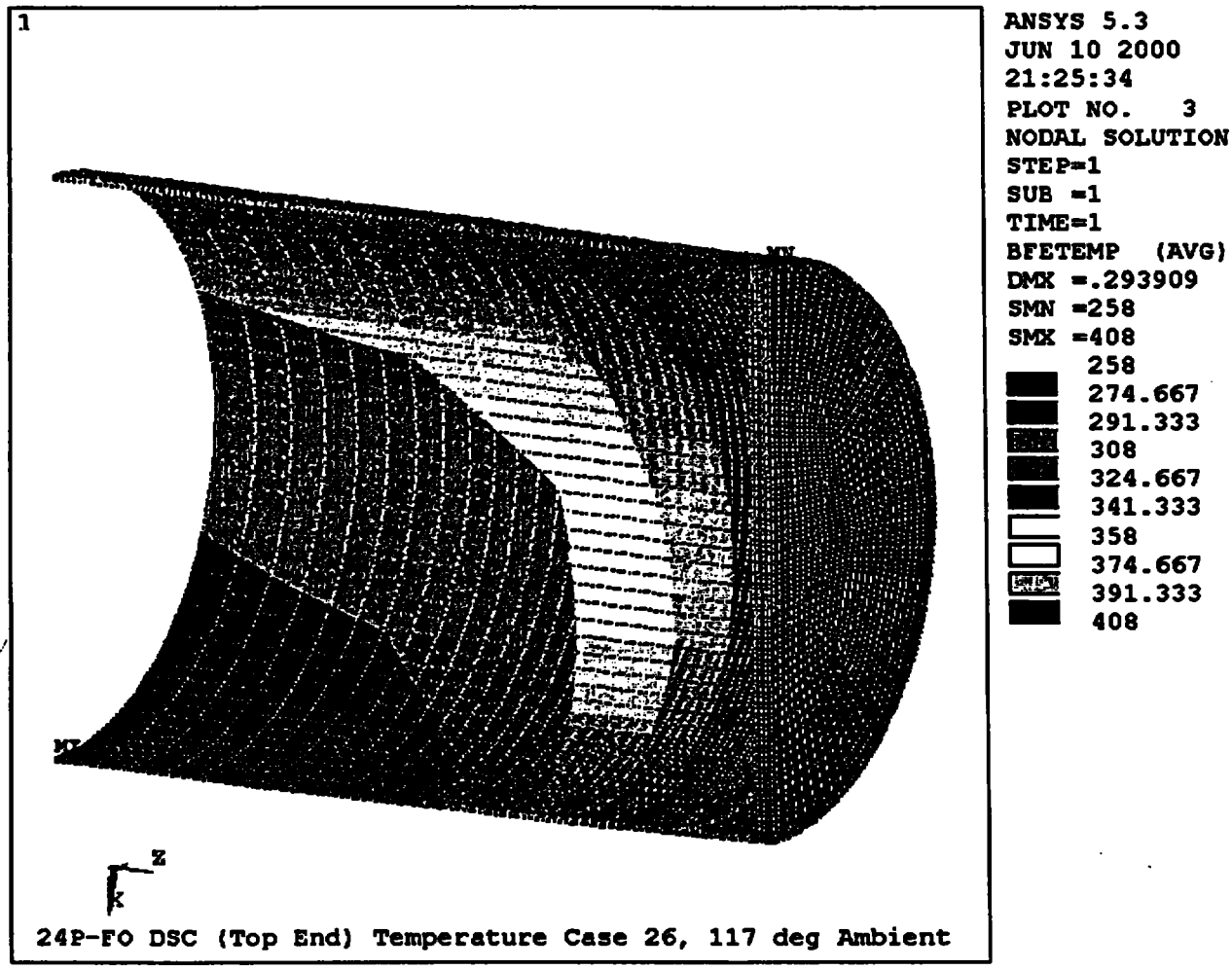

Figure B10-1

24P-FO DSC Shell Assembly, Top End Components

Temperature Contour

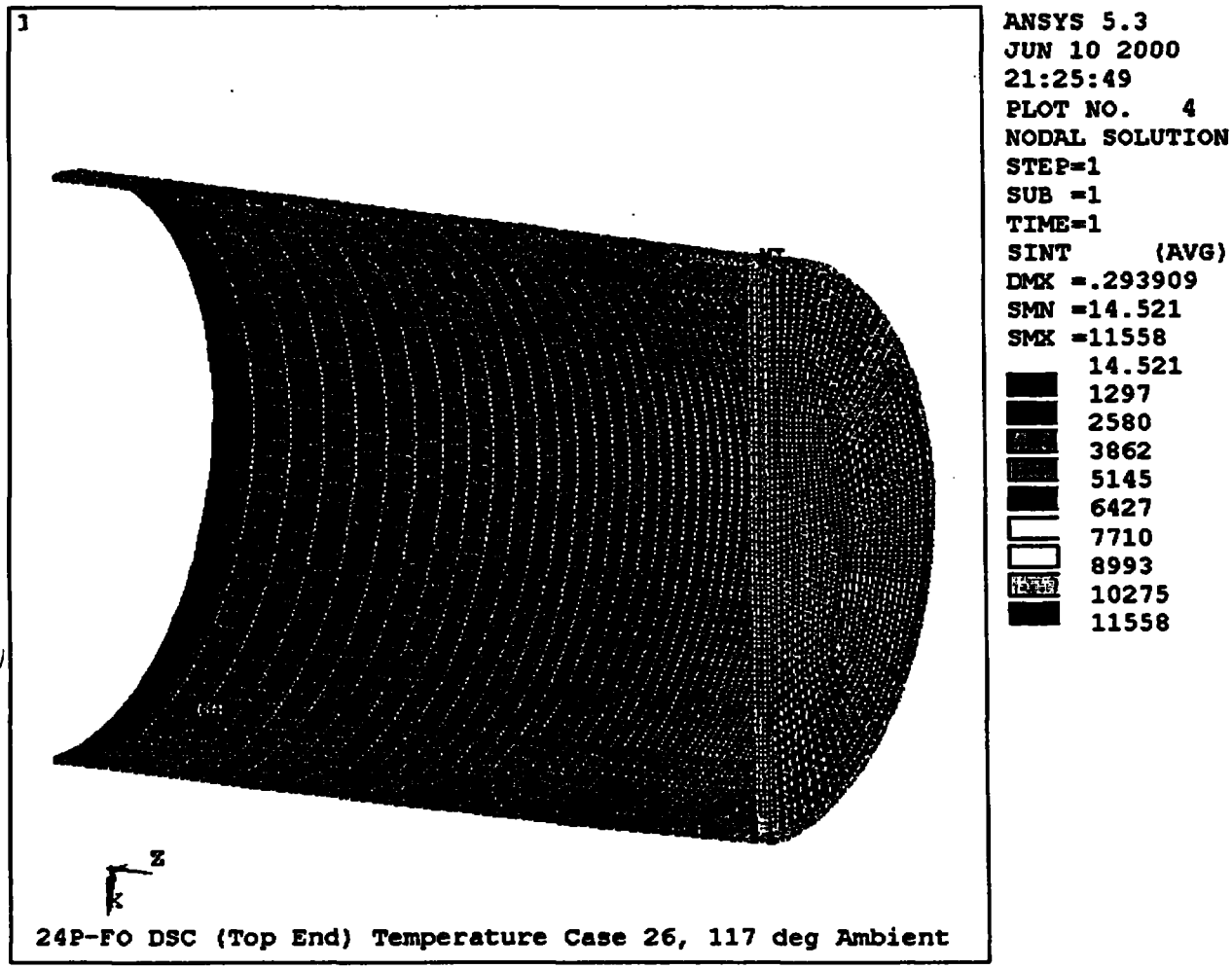

Figure B10-2

24P-FO DSC Shell Assembly, Top End Components

Stress Intensity Contour

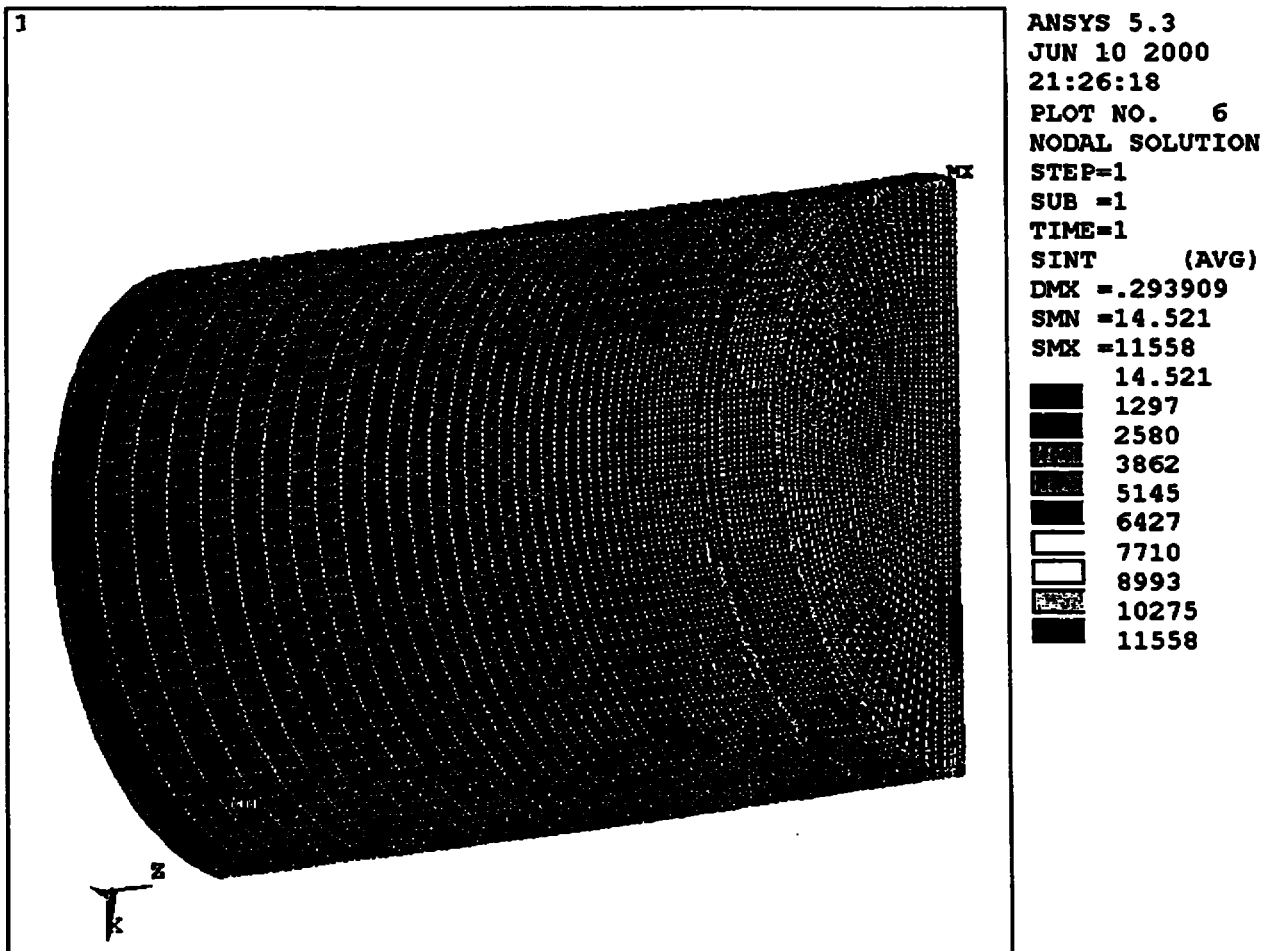

Figure B10-3

24P-FO DSC Shell Assembly, Top End Components

Stress Intensity Contour

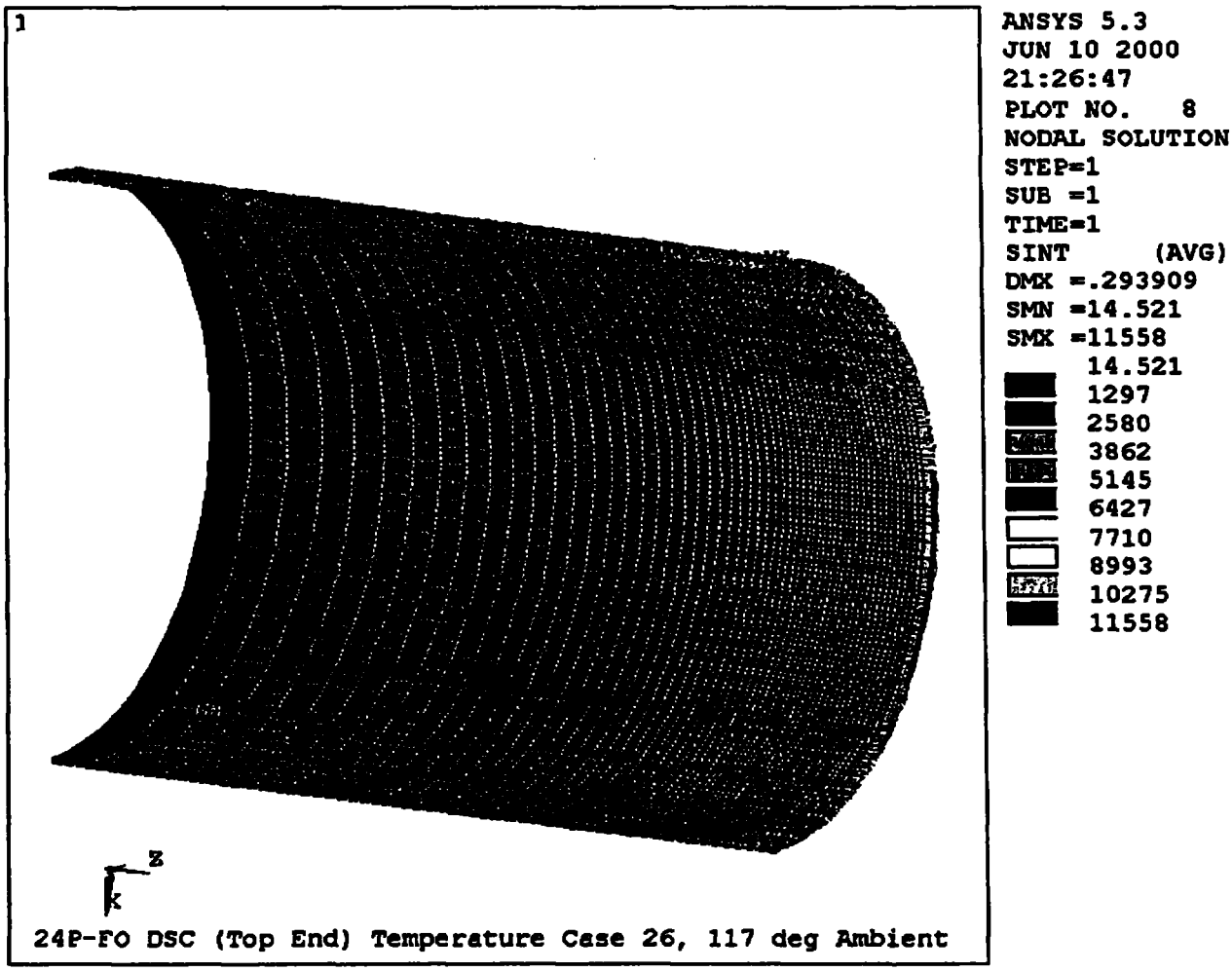

Figure B10-4

24P-FO DSC Shell Assembly, Cylindrical Shell (Top Half)

Stress Intensity Contour

Appendix B11

ANSYS Stress Intensity Contour Plots for Run PT24PTHP

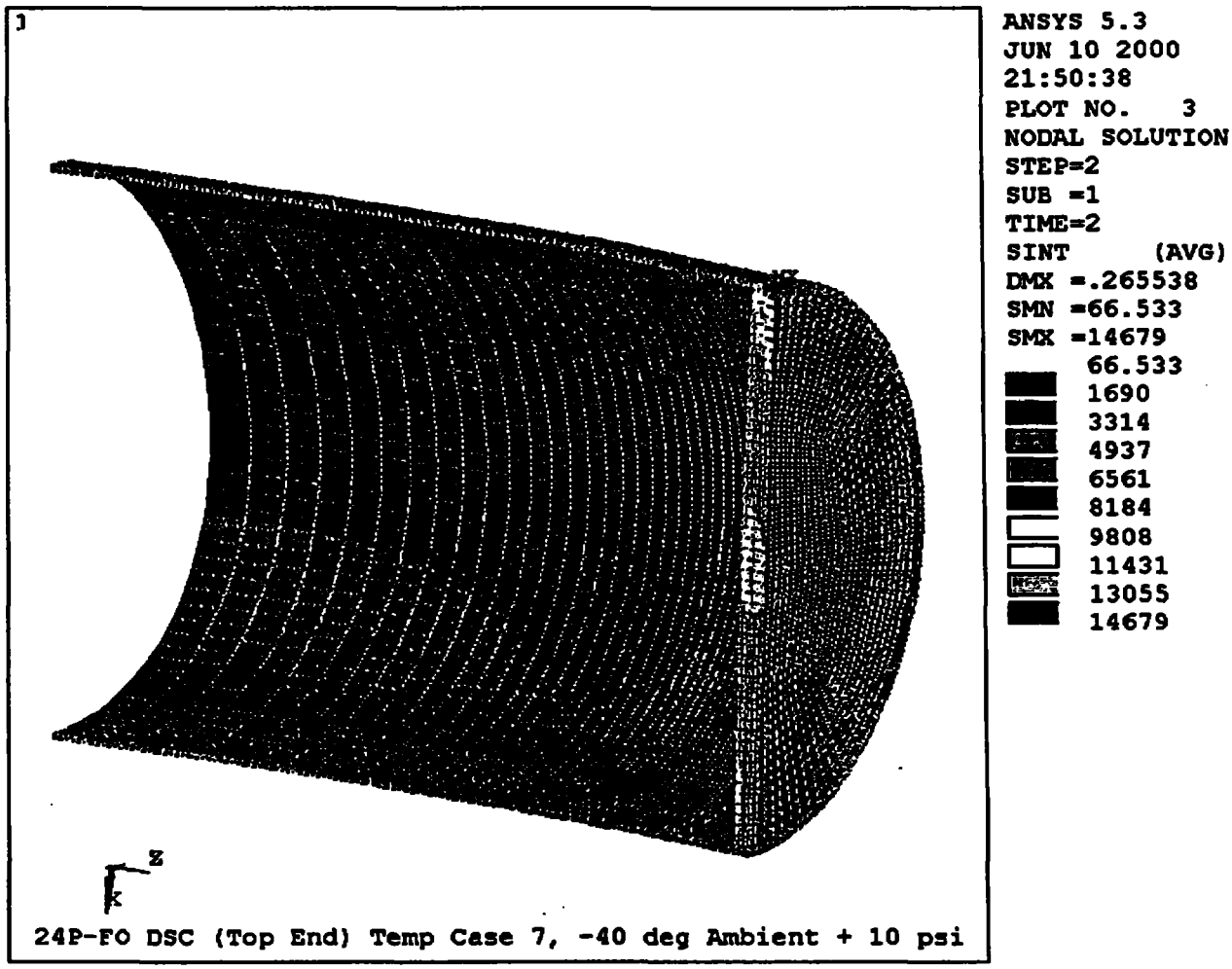

Figure B11-1

24P-FO DSC Shell Assembly, Top End Components

Stress Intensity Contour

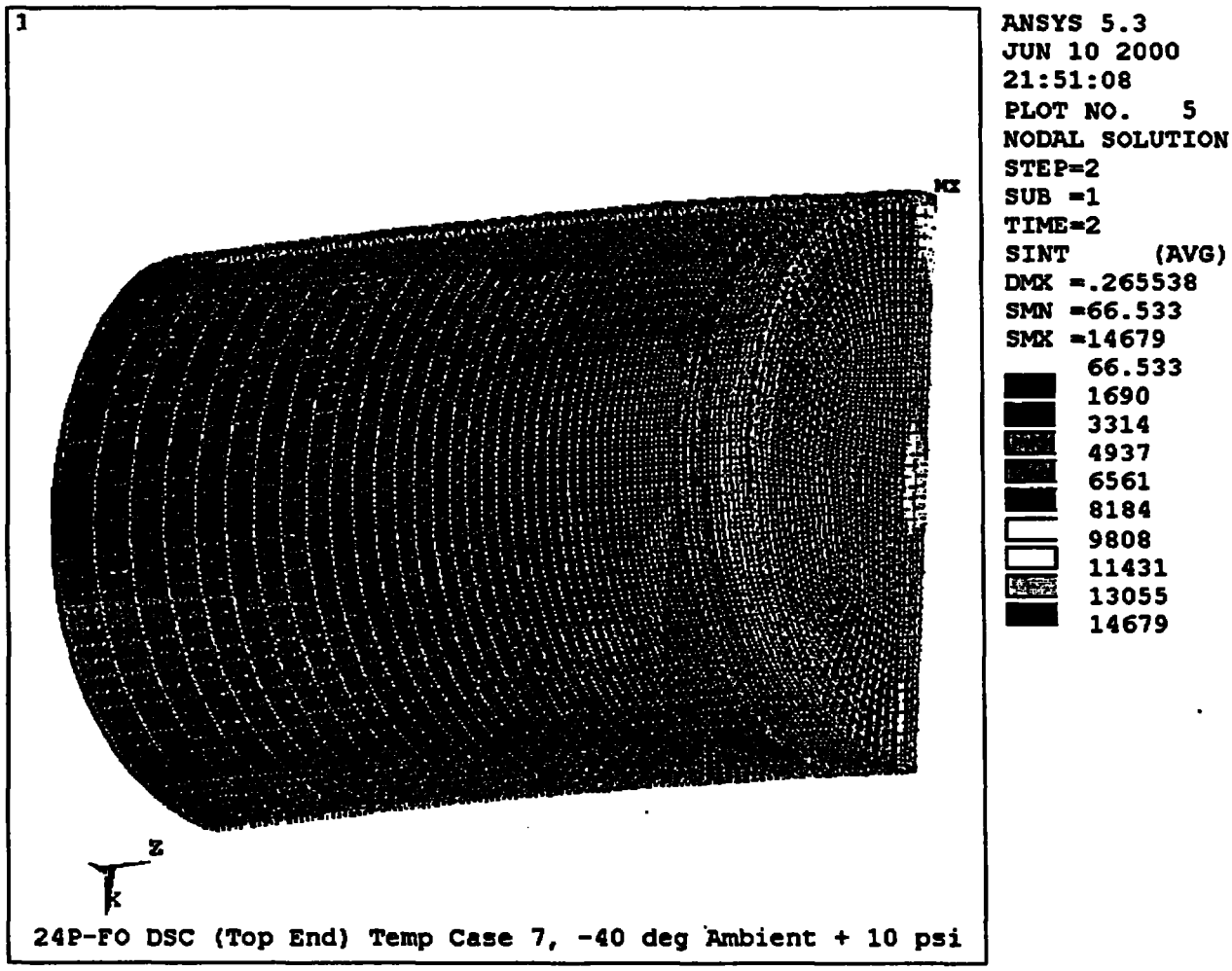

Figure B11-2

24P-FO DSC Shell Assembly, Top End Components

Stress Intensity Contour

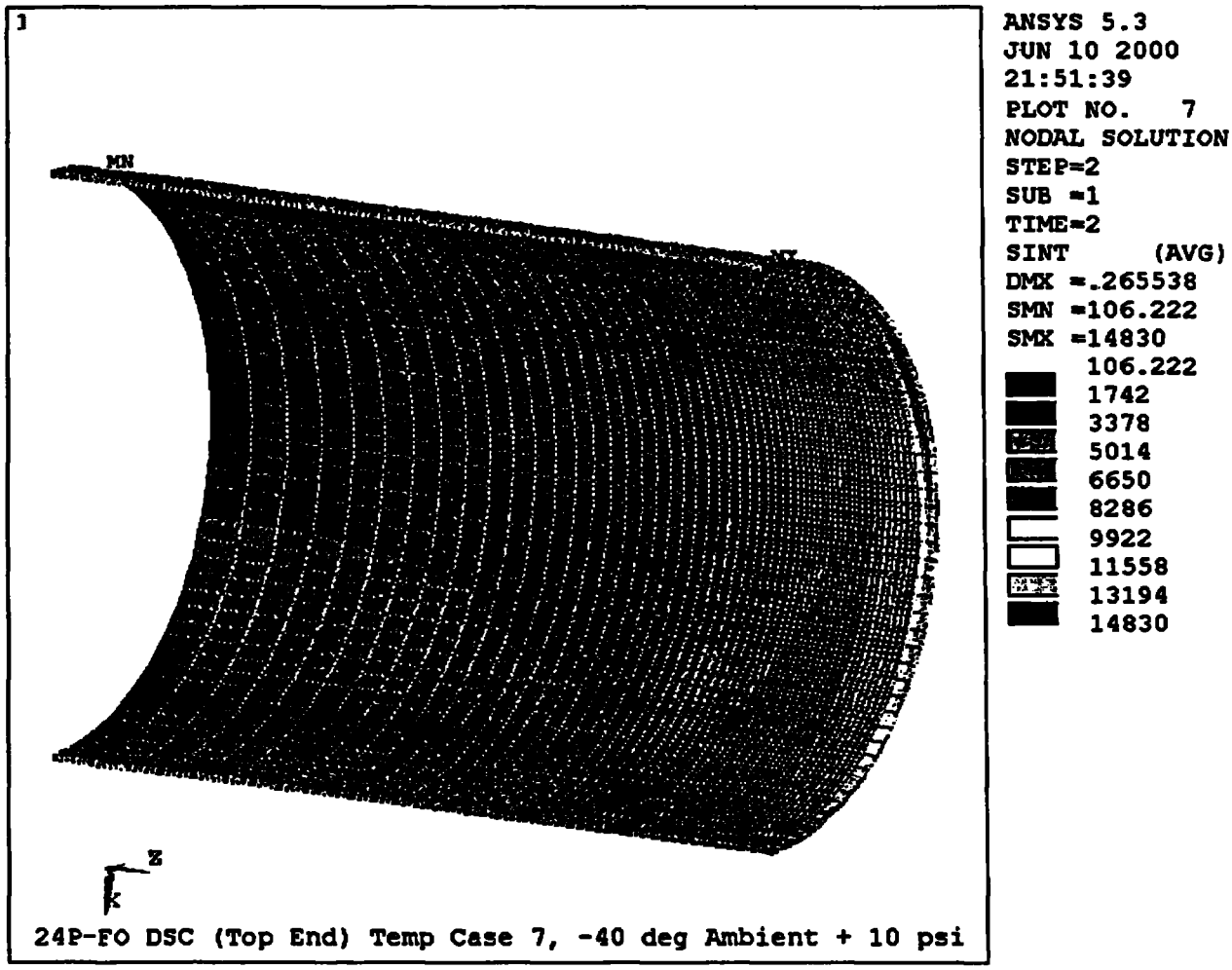

Figure B11-3

24P-FO DSC Shell Assembly, Cylindrical Shell (Top Half)

Stress Intensity Contour

Appendix B11

ANSYS Stress Intensity Contour Plots for Run PT24PTHP

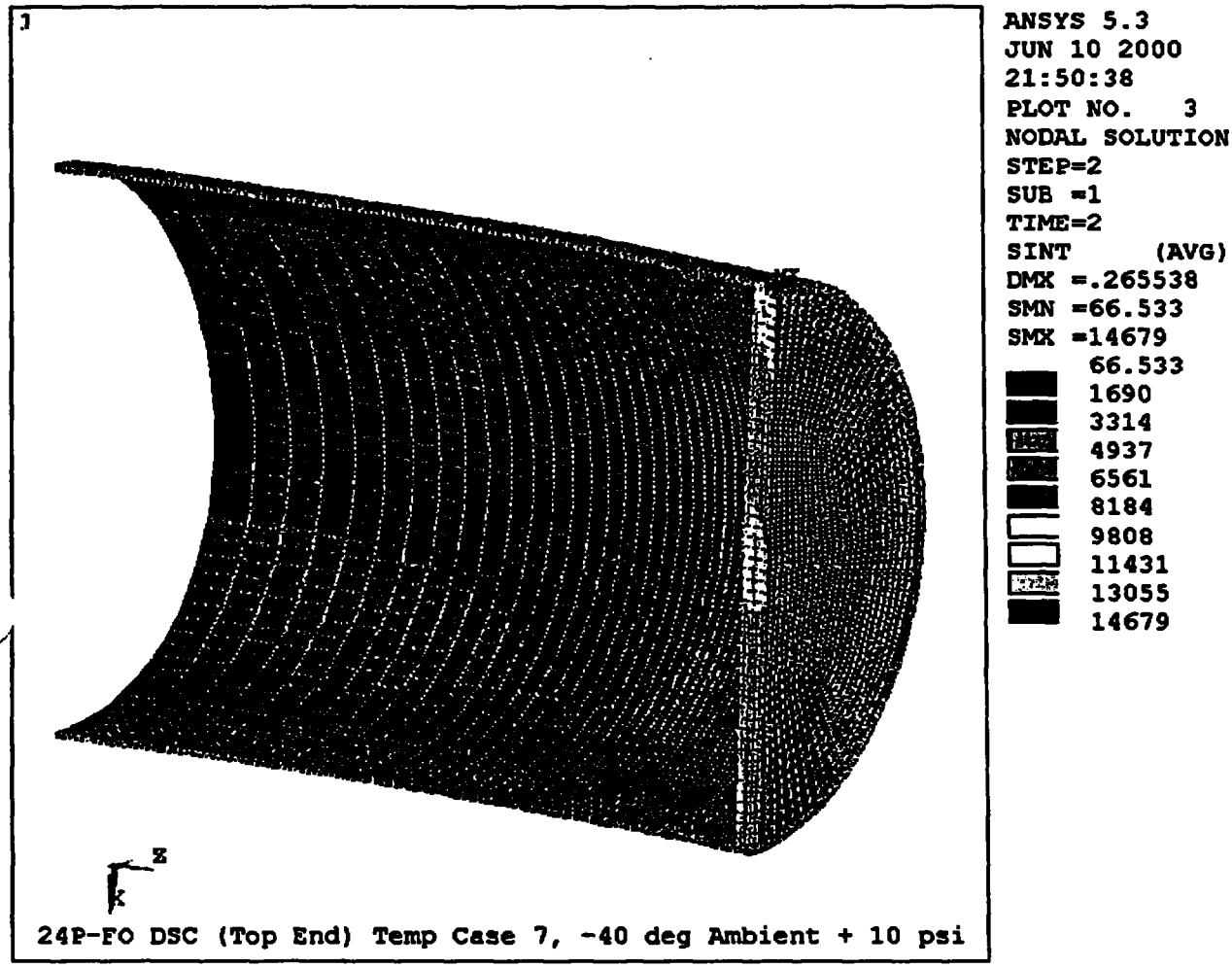

Figure B11-1

24P-FO DSC Shell Assembly, Top End Components

Stress Intensity Contour

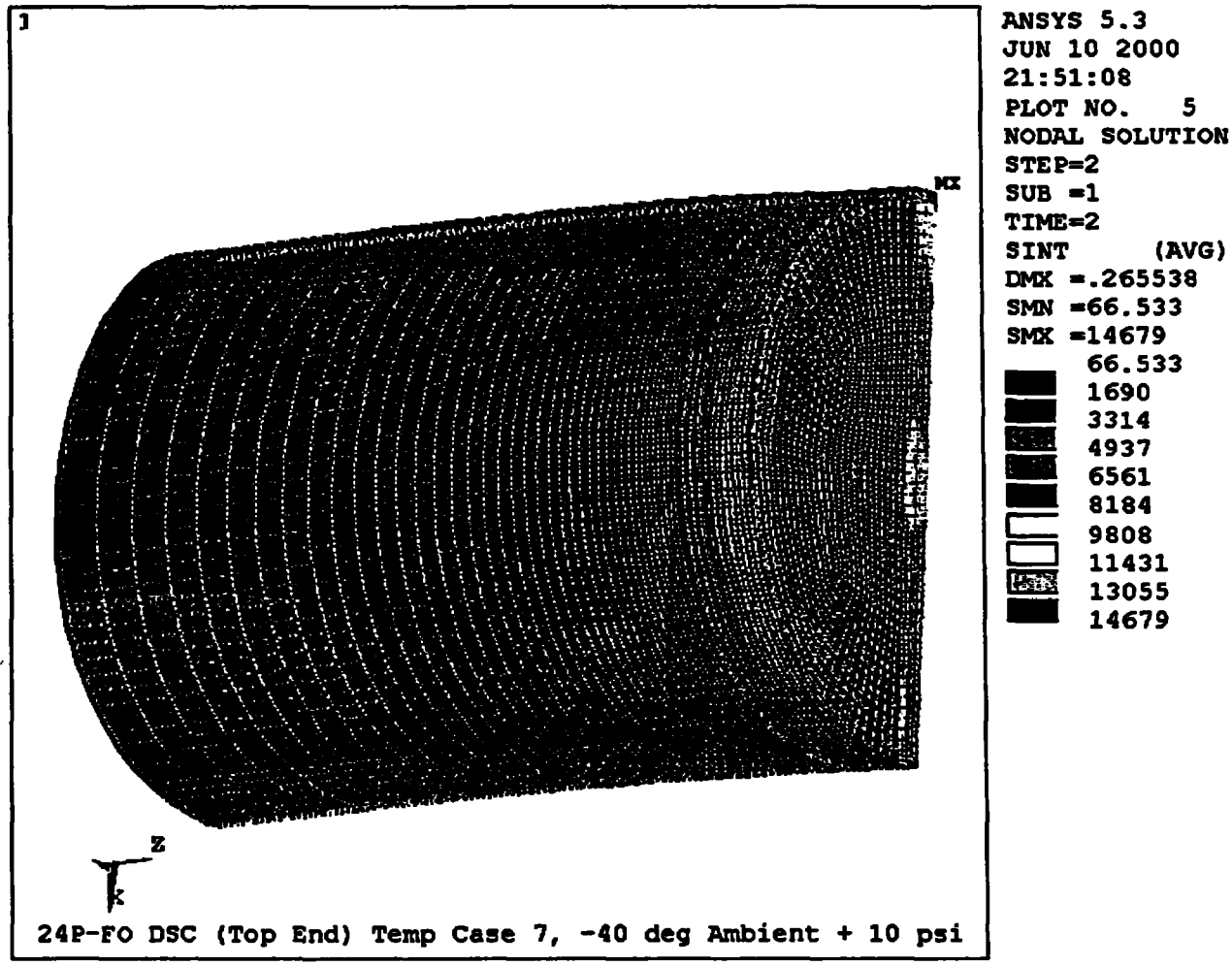

Figure B11-2

24P-FO DSC Shell Assembly, Top End Components

Stress Intensity Contour

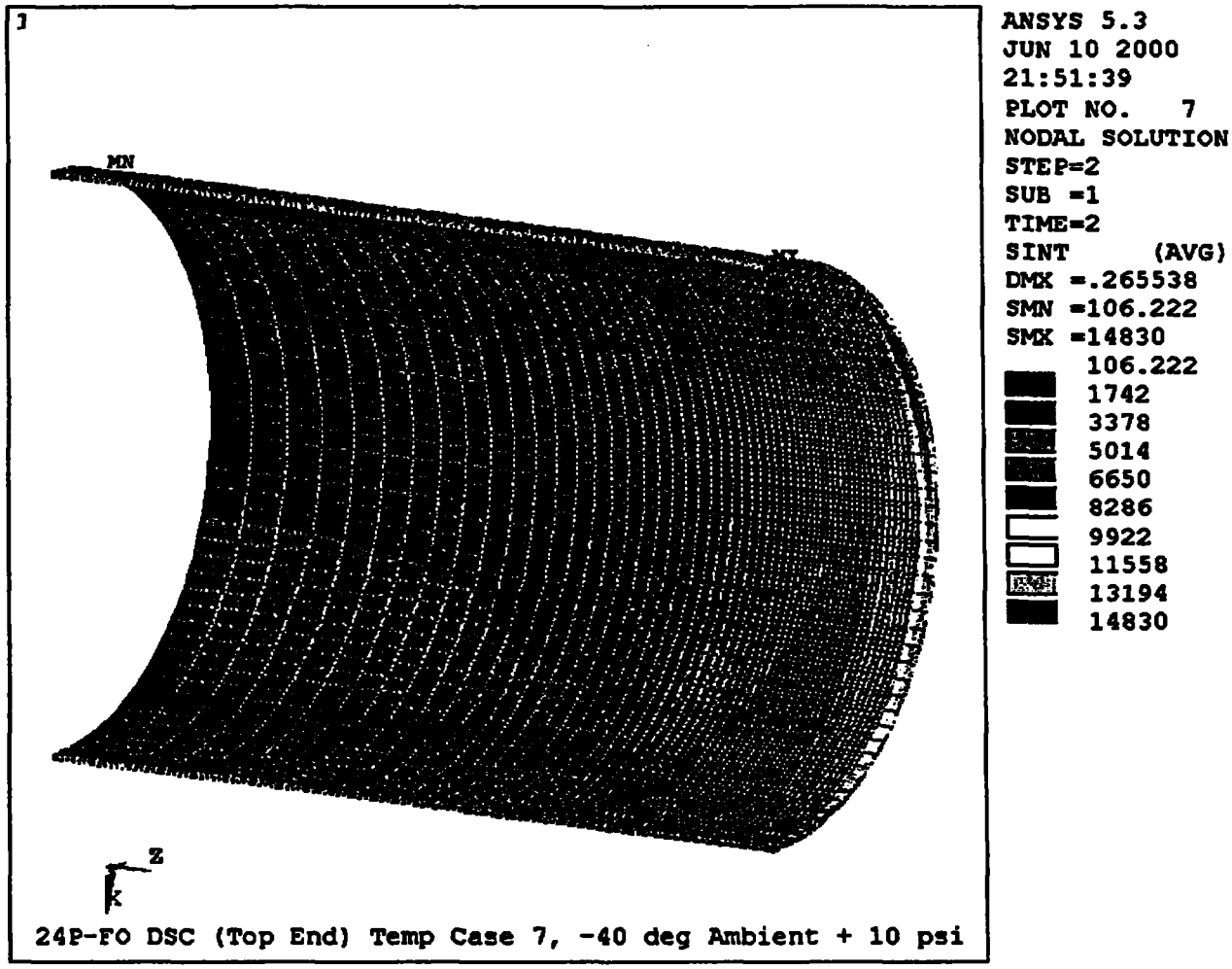

Figure B11-3

24P-FO DSC Shell Assembly, Cylindrical Shell (Top Half)

Stress Intensity Contour

Appendix B12

ANSYS Stress Intensity Contour Plots for Run PT24PTP2

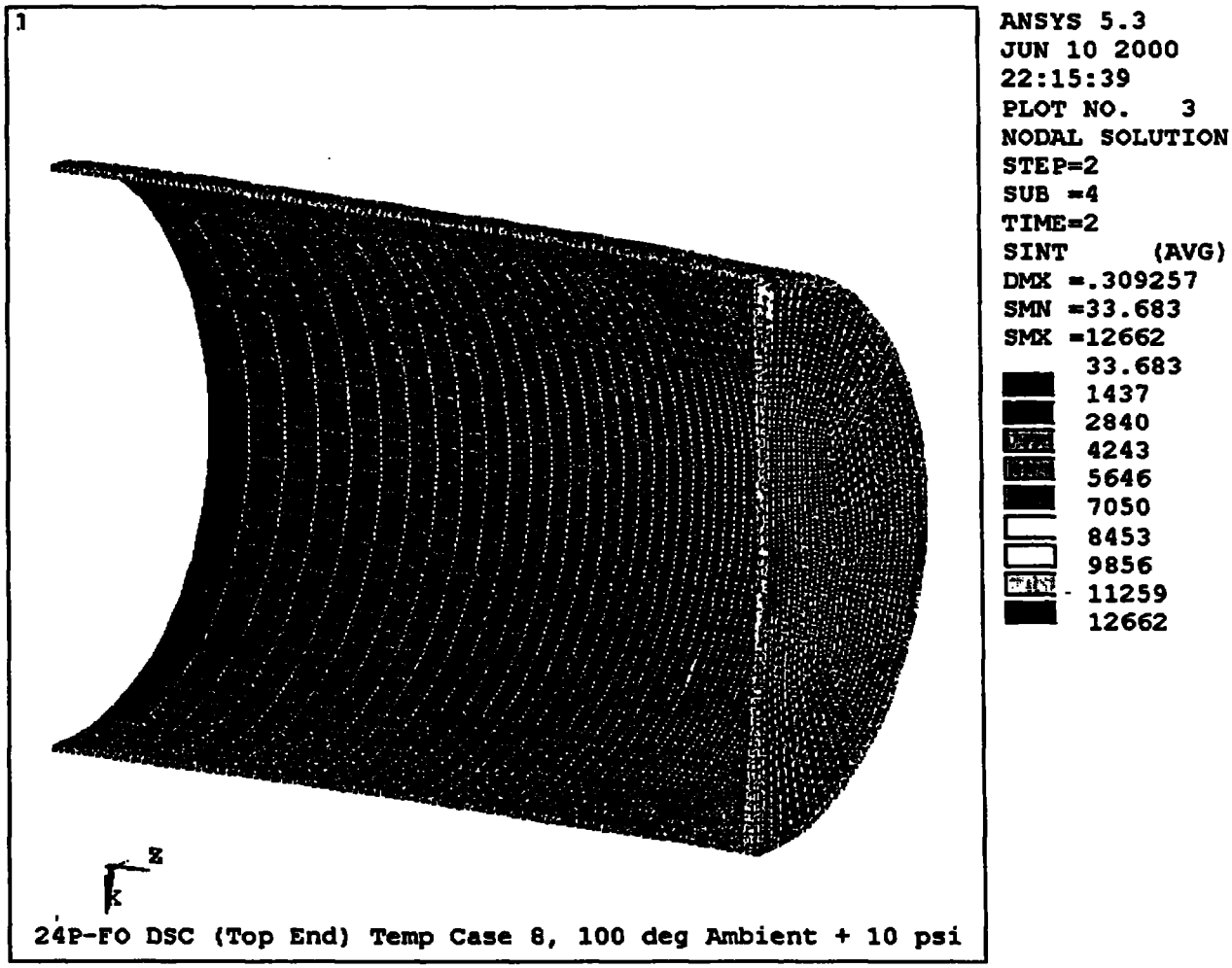

Figure B12-1

24P-FO DSC Shell Assembly, Top End Components

Stress Intensity Contour

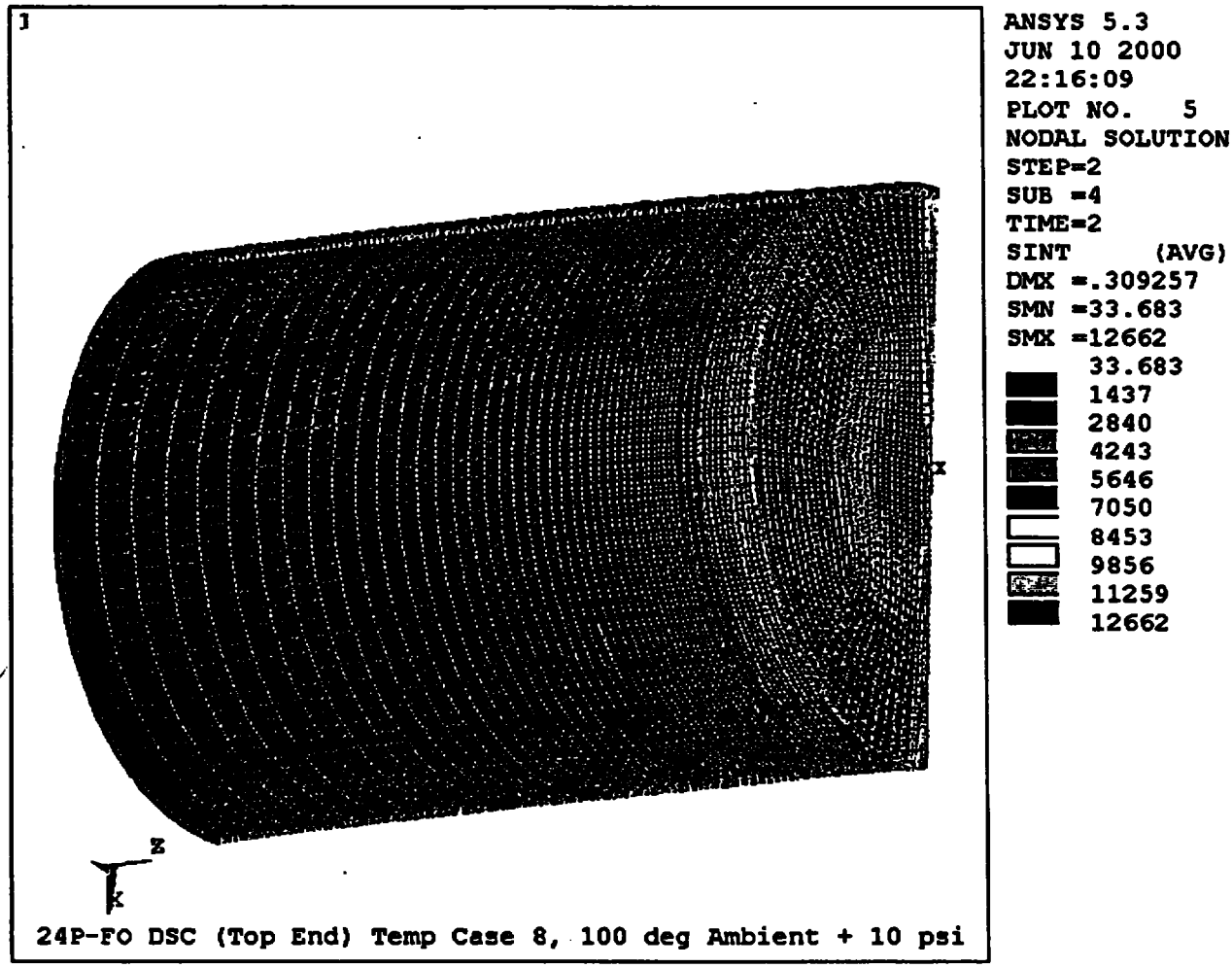

Figure B12-2

24P-FO DSC Shell Assembly, Top End Components

Stress Intensity Contour

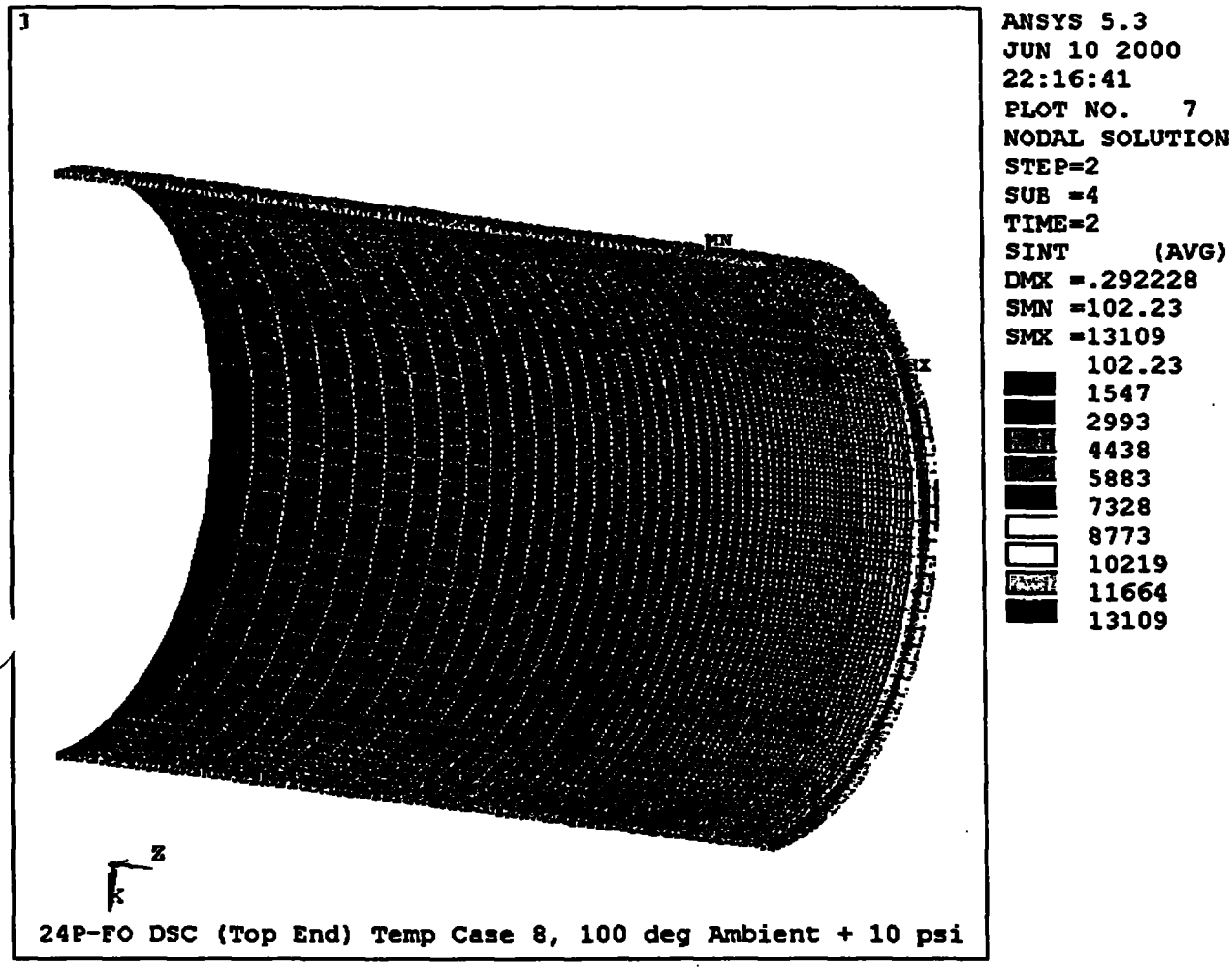

Figure B12-3

24P-FO DSC Shell Assembly, Cylindrical Shell (Top Half)

Stress Intensity Contour

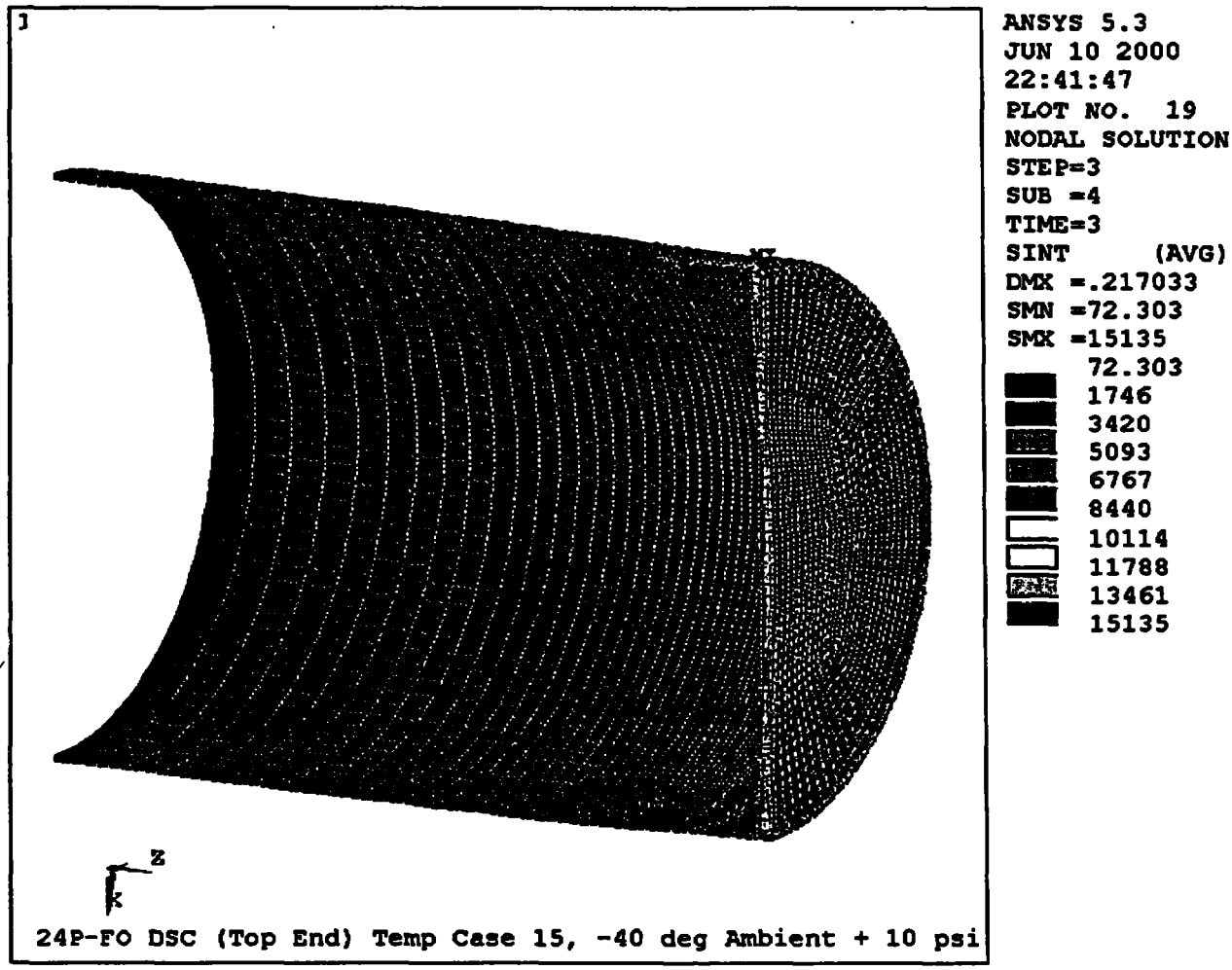

Figure B12-4

24P-FO DSC Shell Assembly, Top End Components

Stress Intensity Contour

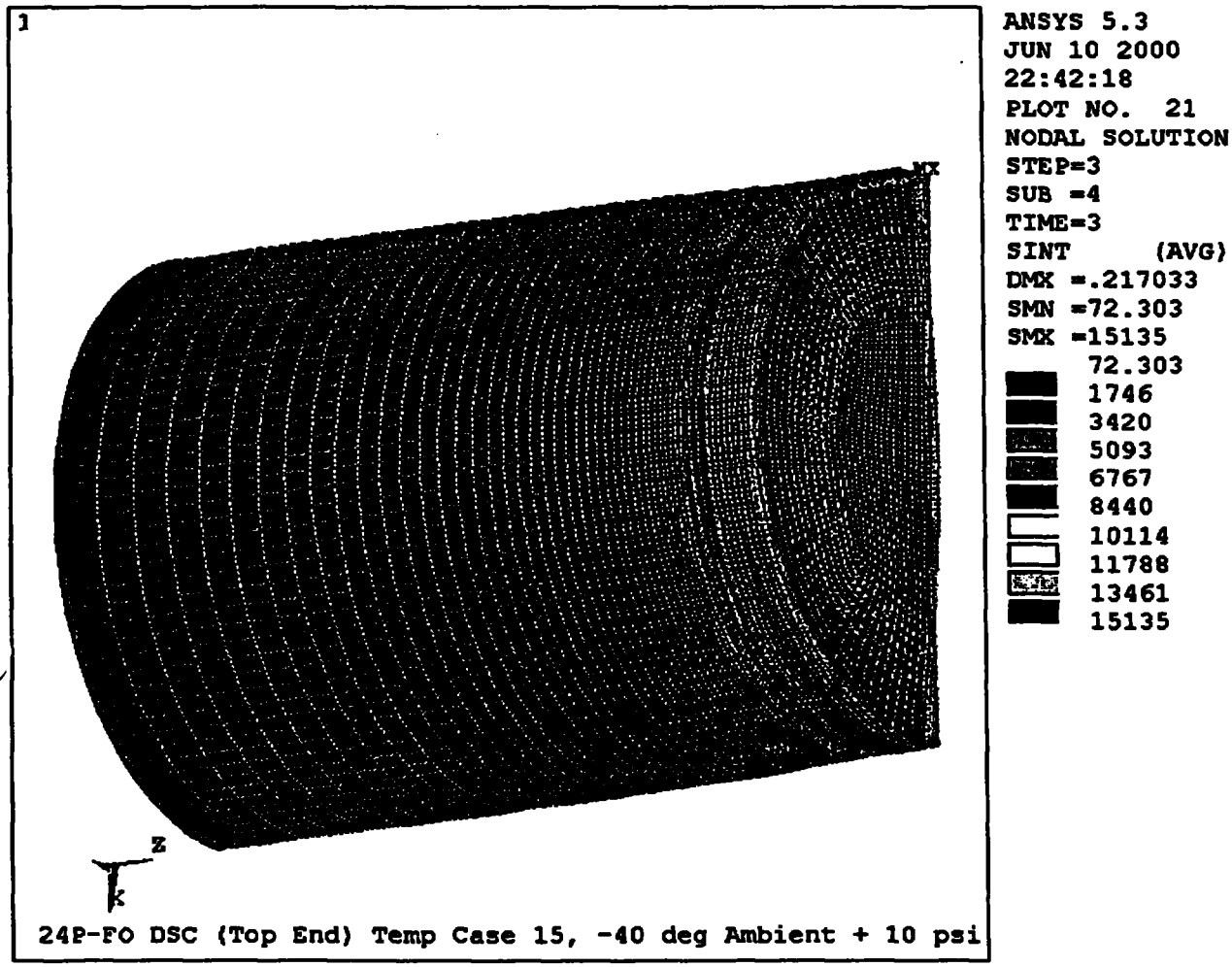

Figure B12-5

24P-FO DSC Shell Assembly, Top End Components

Stress Intensity Contour

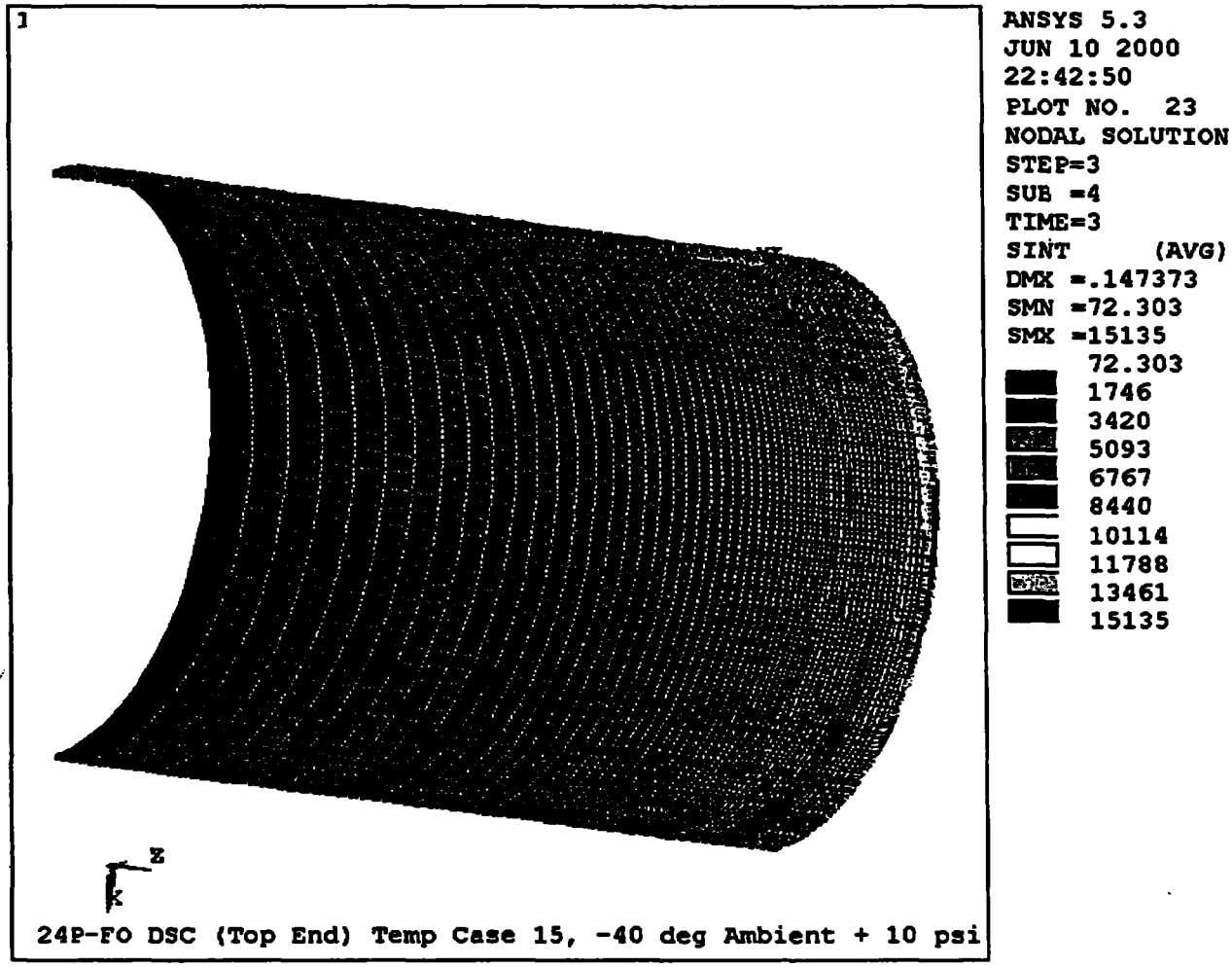

Figure B12-6

24P-FO DSC Shell Assembly, Cylindrical Shell (Top Half)

Stress Intensity Contour

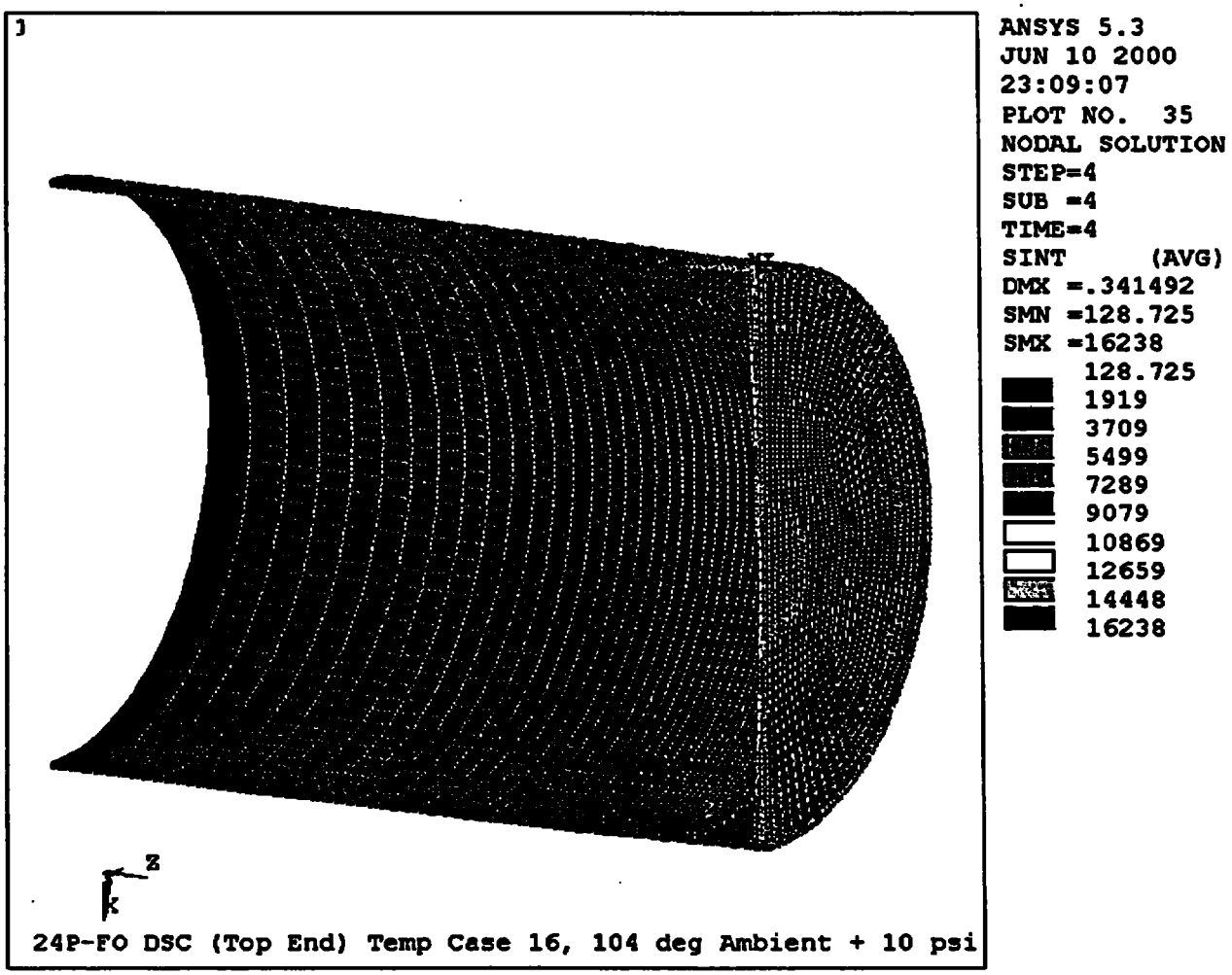

Figure B12-7

24P-FO DSC Shell Assembly, Top End Components

Stress Intensity Contour

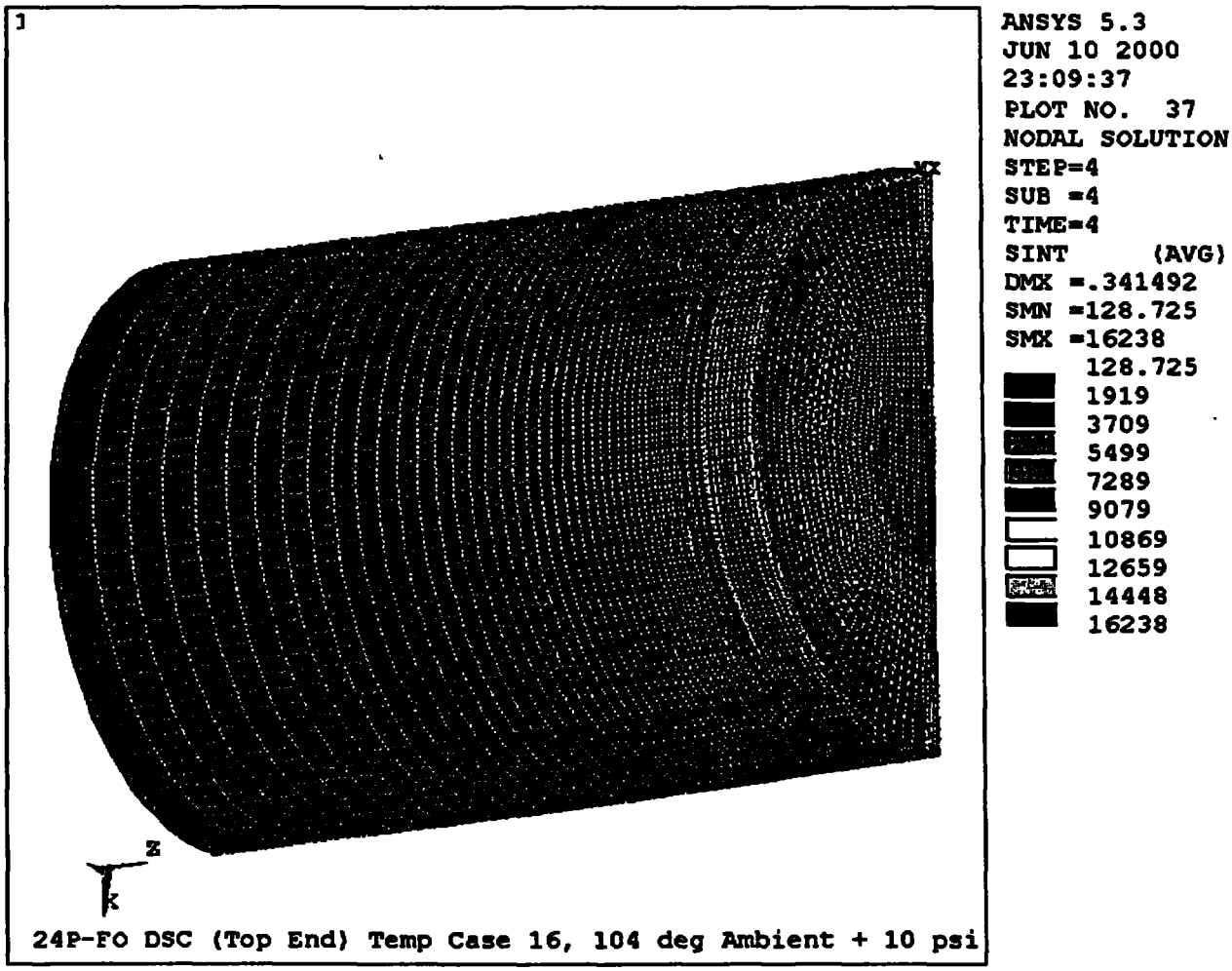

Figure B12-8

24P-FO DSC Shell Assembly, Top End Components

Stress Intensity Contour

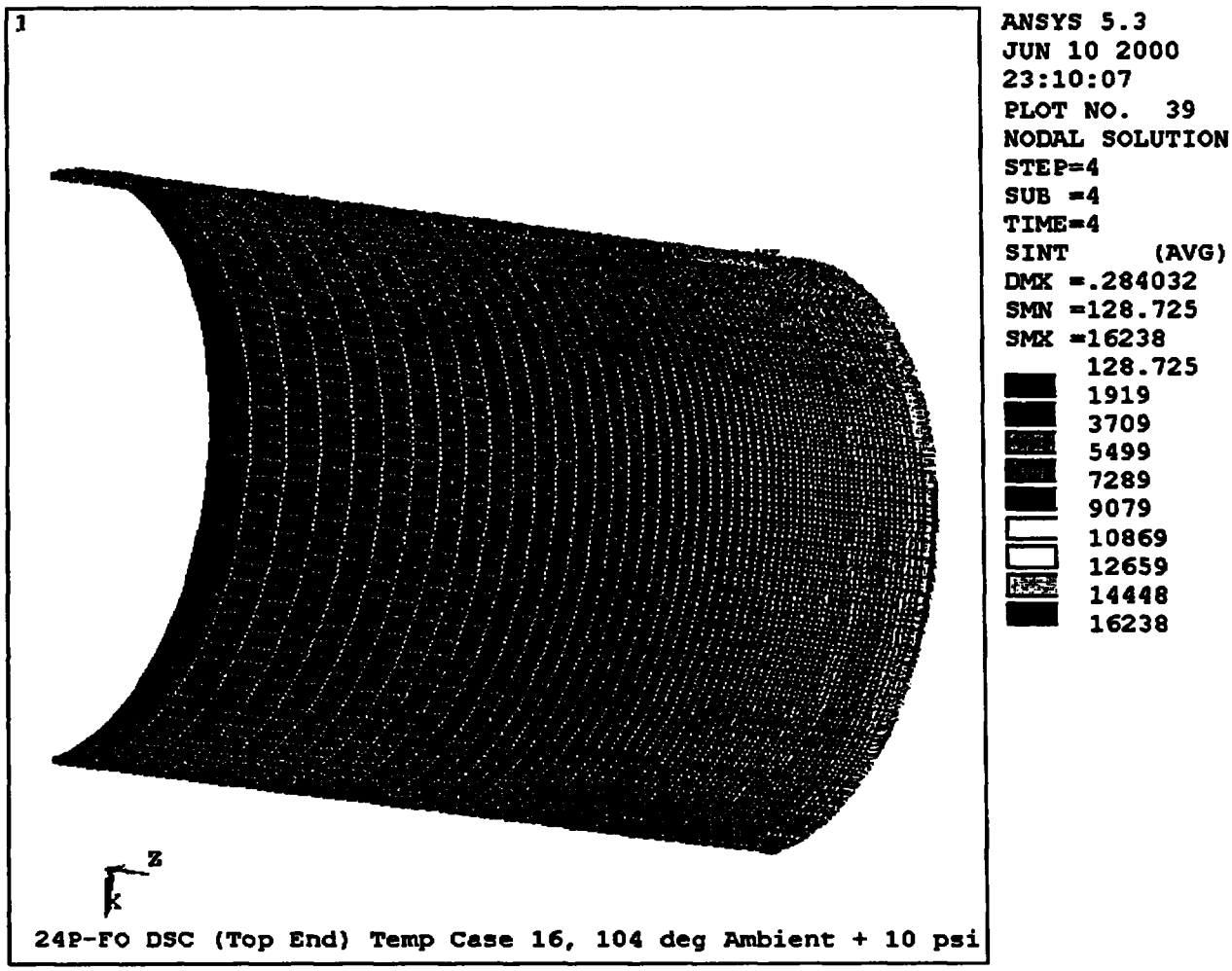

Figure B12-9

24P-FO DSC Shell Assembly, Cylindrical Shell (Top Half)

Stress Intensity Contour

Appendix B13

ANSYS Stress Intensity Contour Plots for Run PT24PTP3

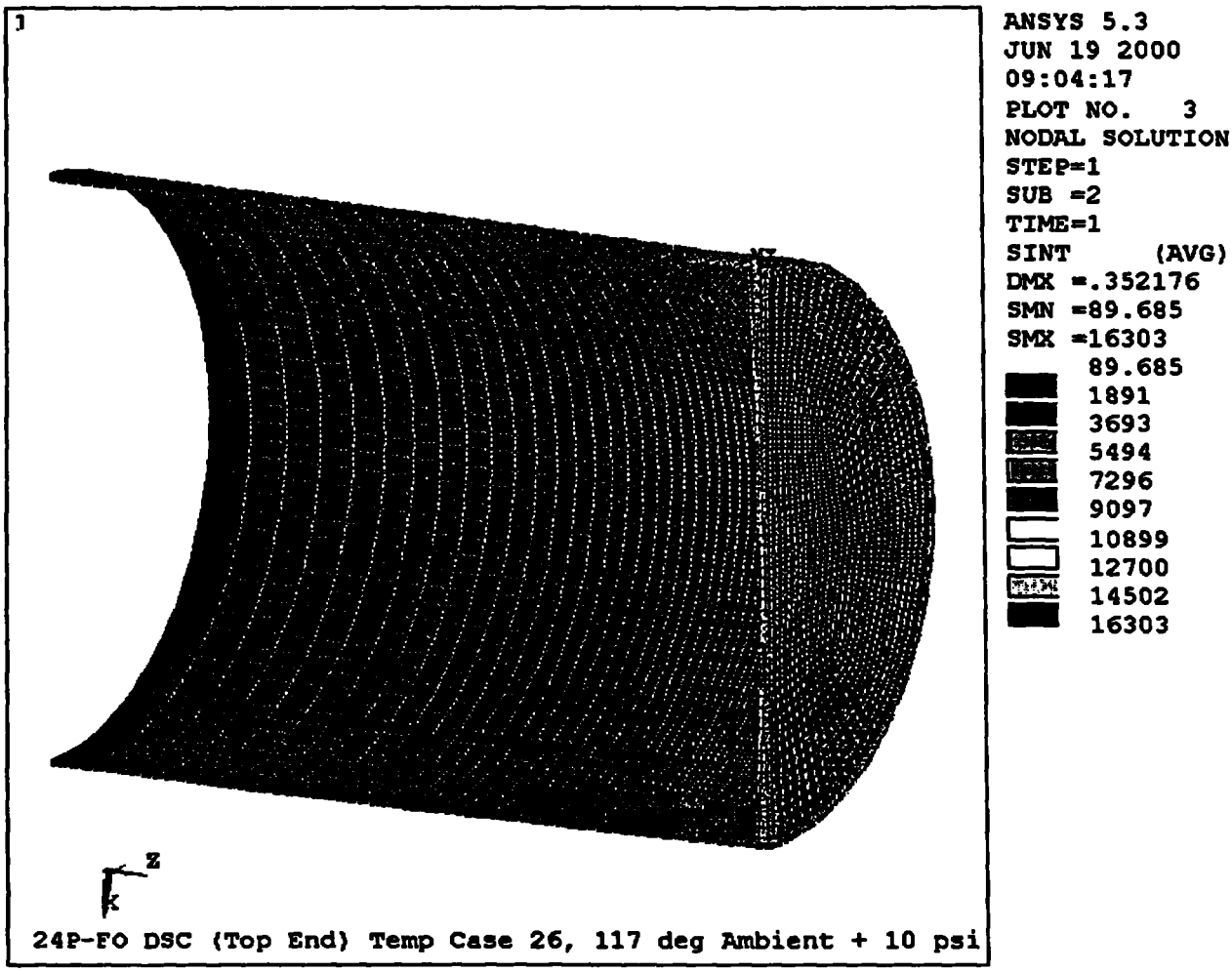

Figure B13-1

24P-FO DSC Shell Assembly, Top End Components

Stress Intensity Contour

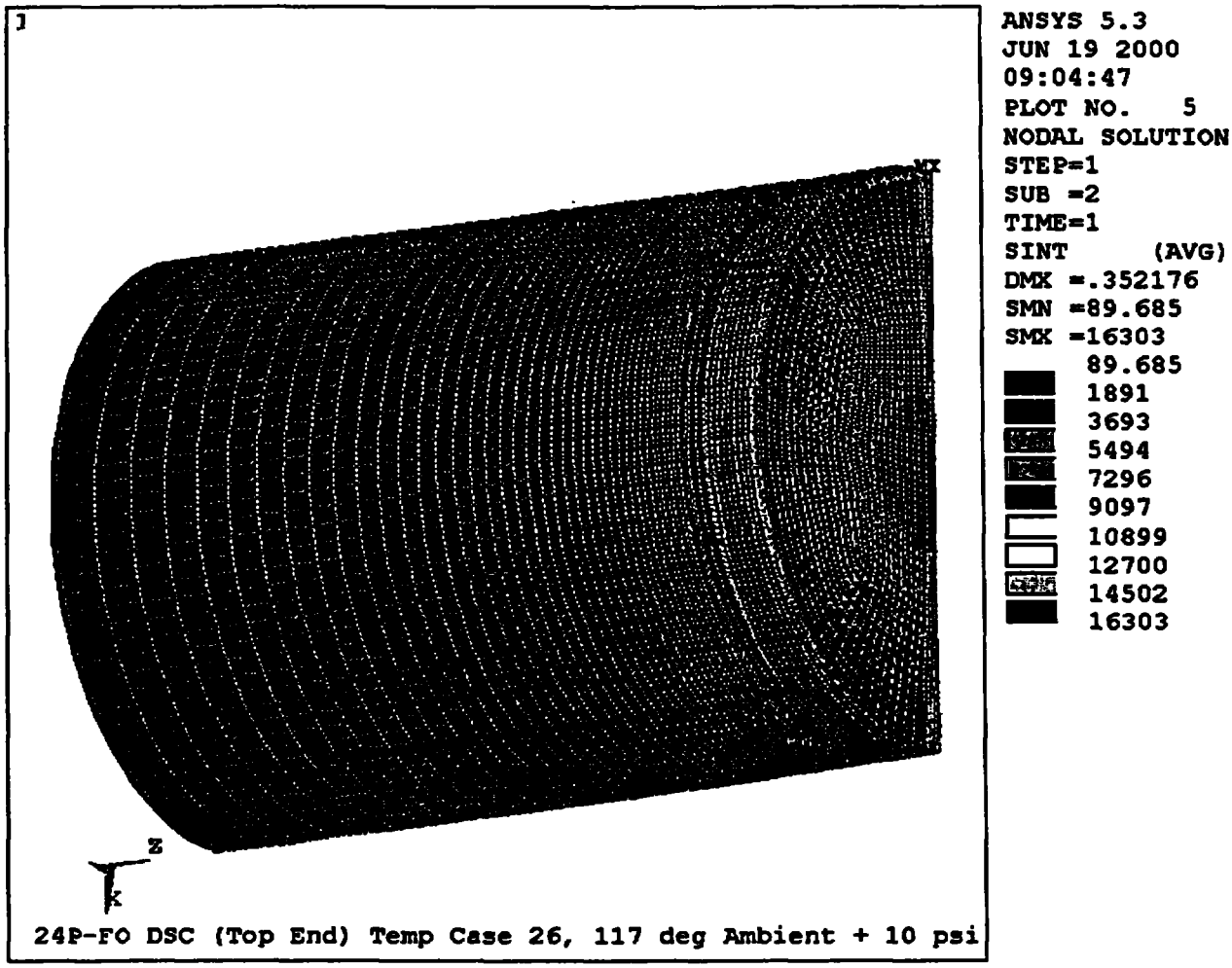

Figure B13-2

24P-FO DSC Shell Assembly, Top End Components

Stress Intensity Contour

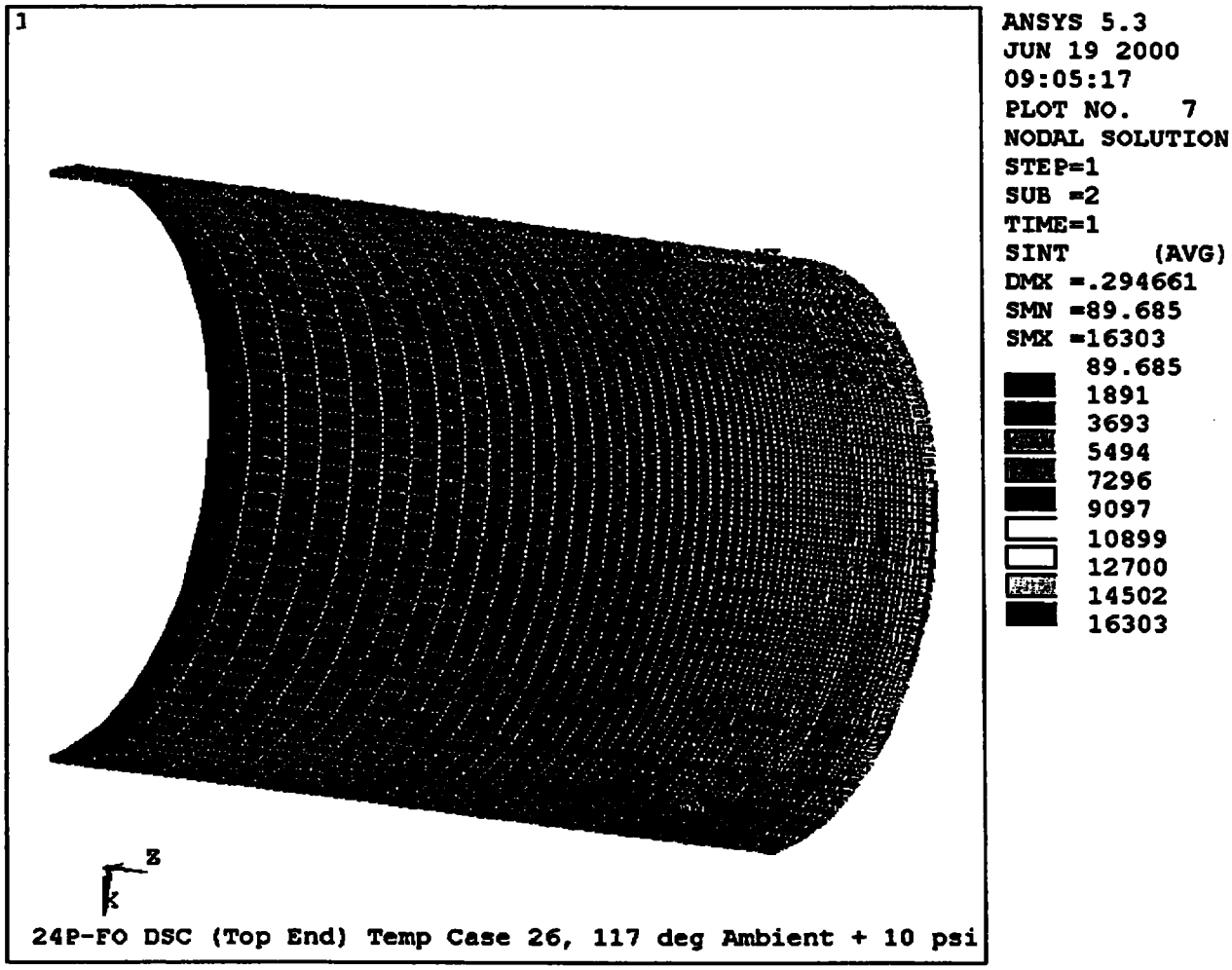

Figure B13-3

24P-FO DSC Shell Assembly, Cylindrical Shell (Top Half)

Stress Intensity Contour

Appendix B14

ANSYS Stress Intensity Contour Plots for Run PB24PLT

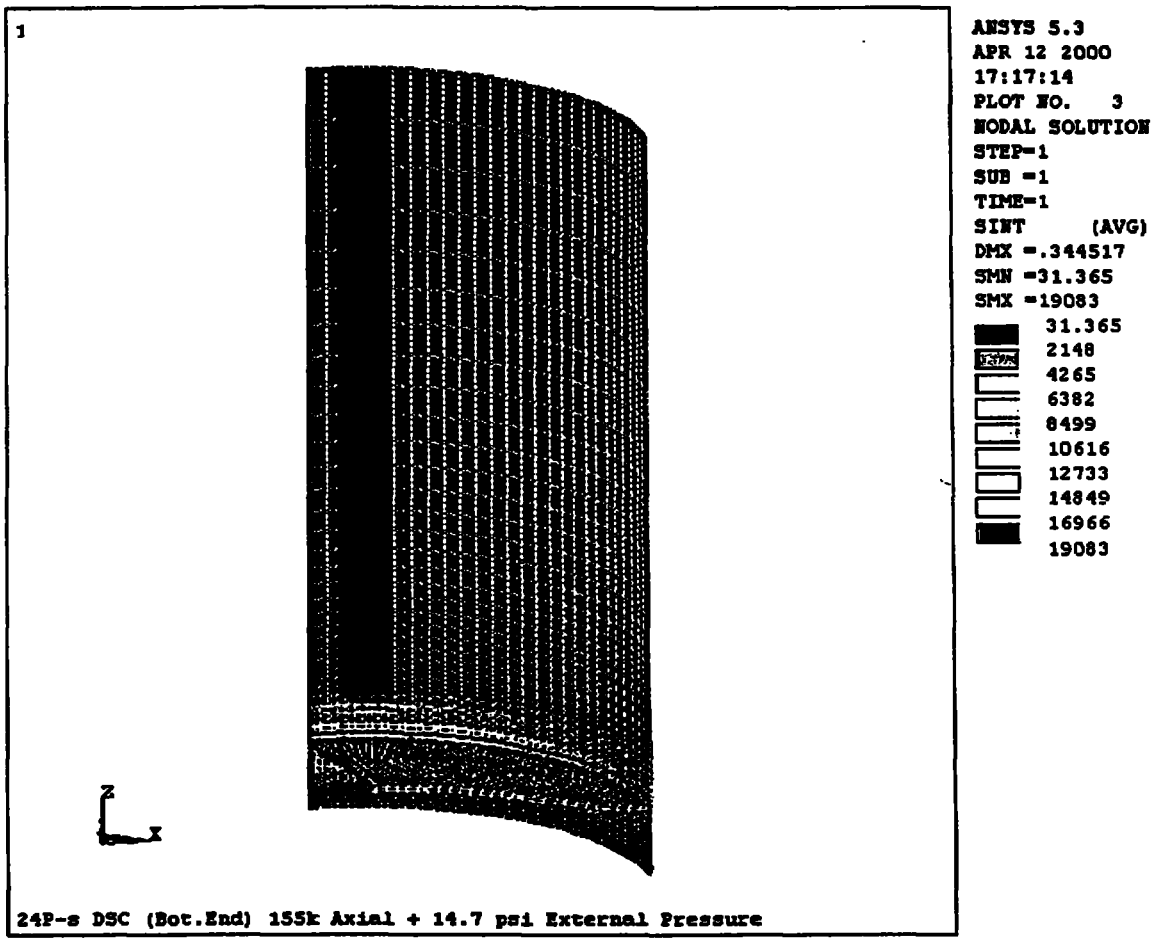

Figure B14-1

24P-FO DSC Shell Assembly, Bottom End Components

Stress Intensity Contour

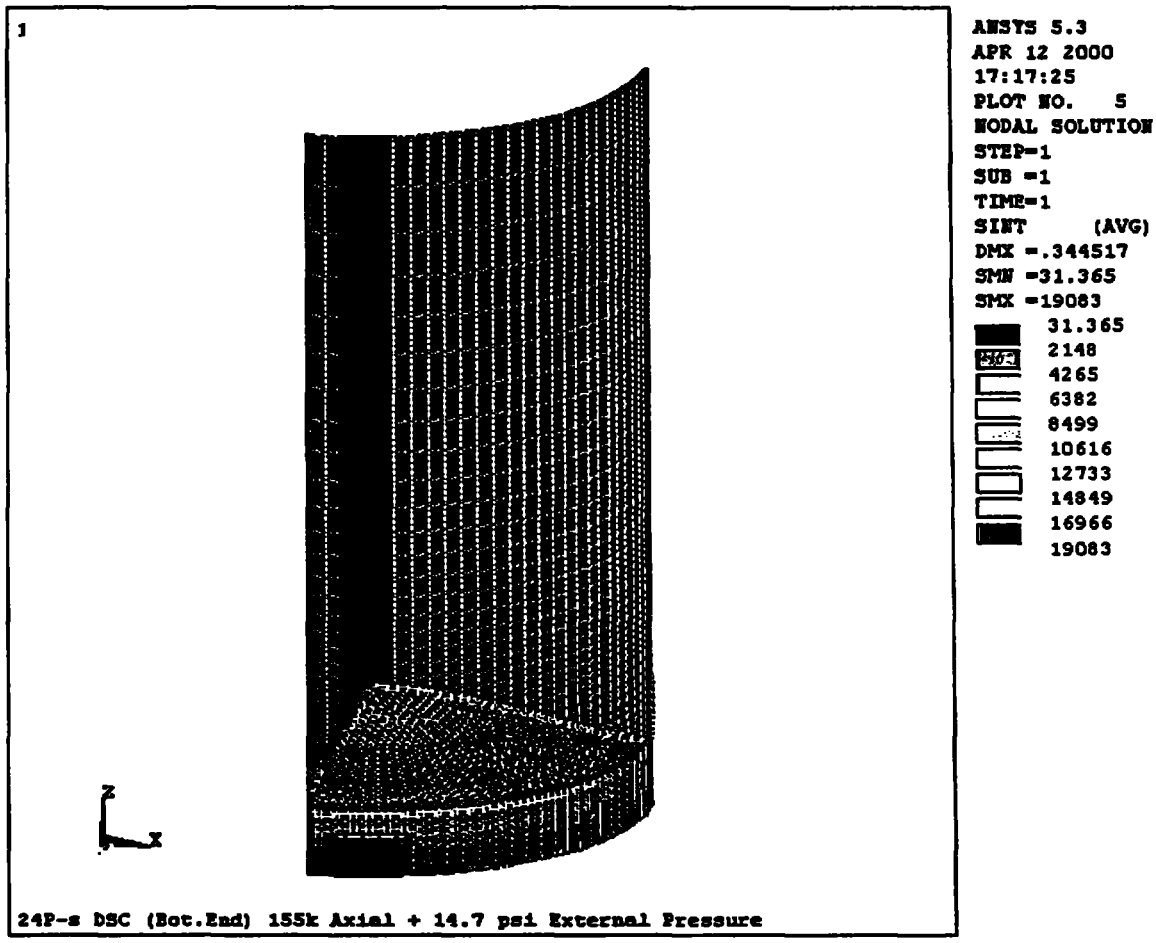

Figure B14-2

24P-FO DSC Shell Assembly, Bottom End Components

Stress Intensity Contour

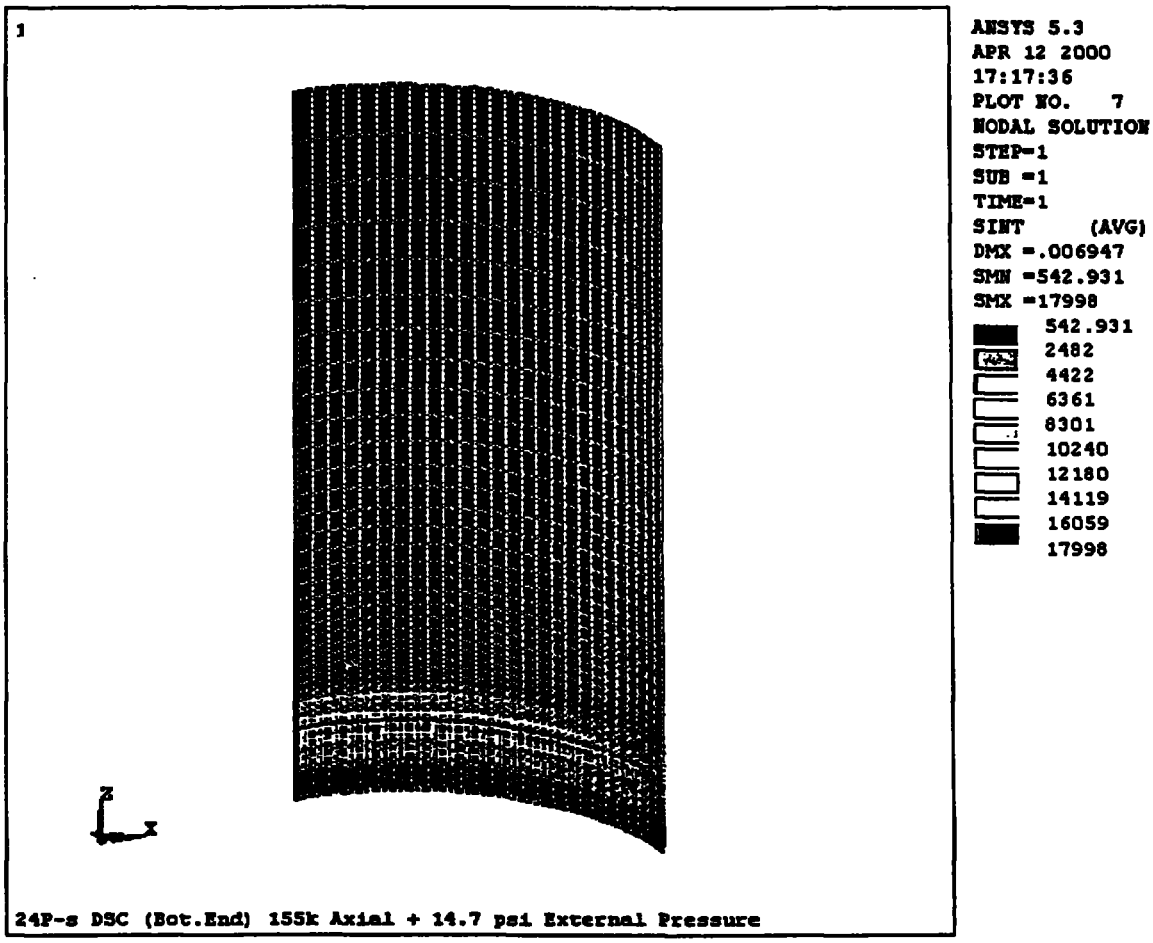

Figure B14-3

24P-FO DSC Shell Assembly, Cylindrical Shell (Bottom Half)

Stress Intensity Contour

Appendix B15

ANSYS Stress Intensity Contour Plots for Run PB24PIP

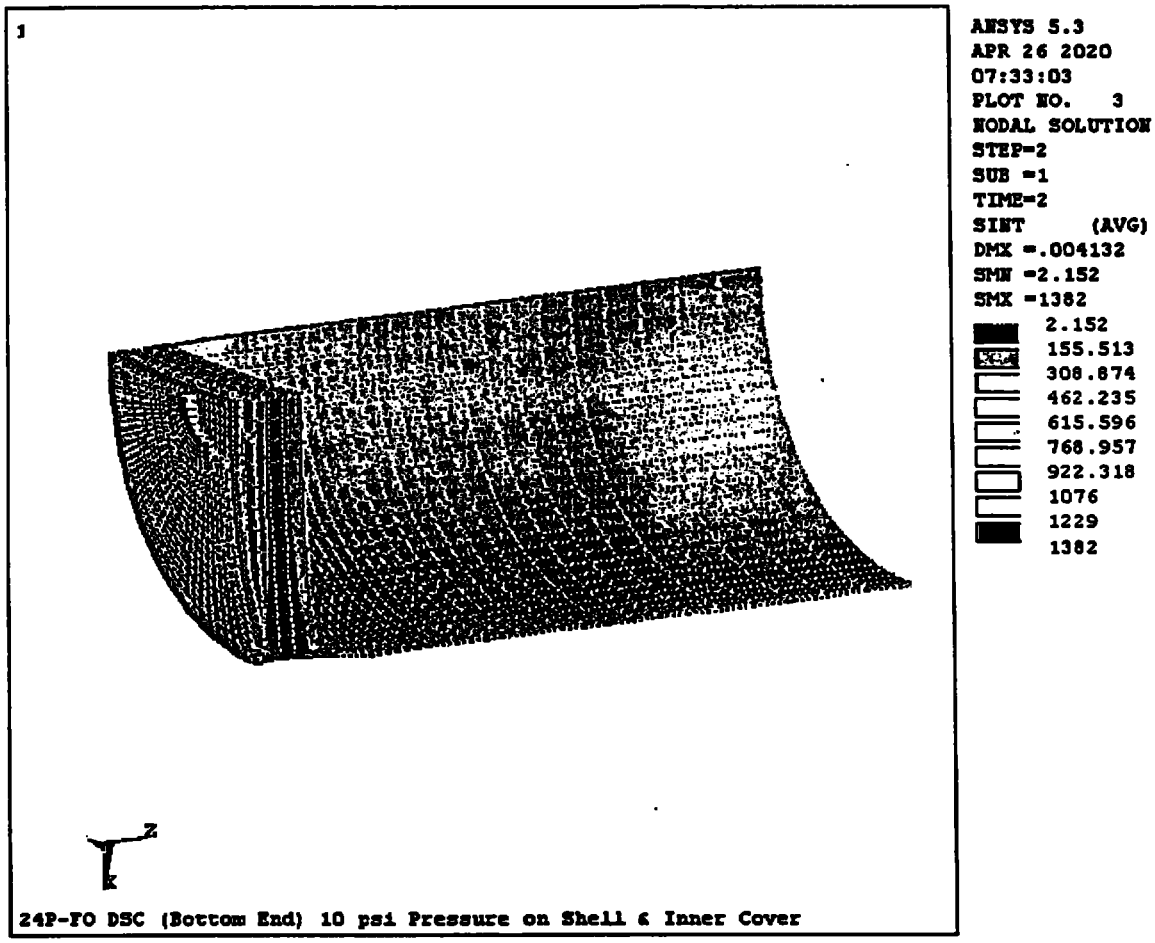

Figure B15-1

24P-FO DSC Shell Assembly, Bottom End Components

Stress Intensity Contour

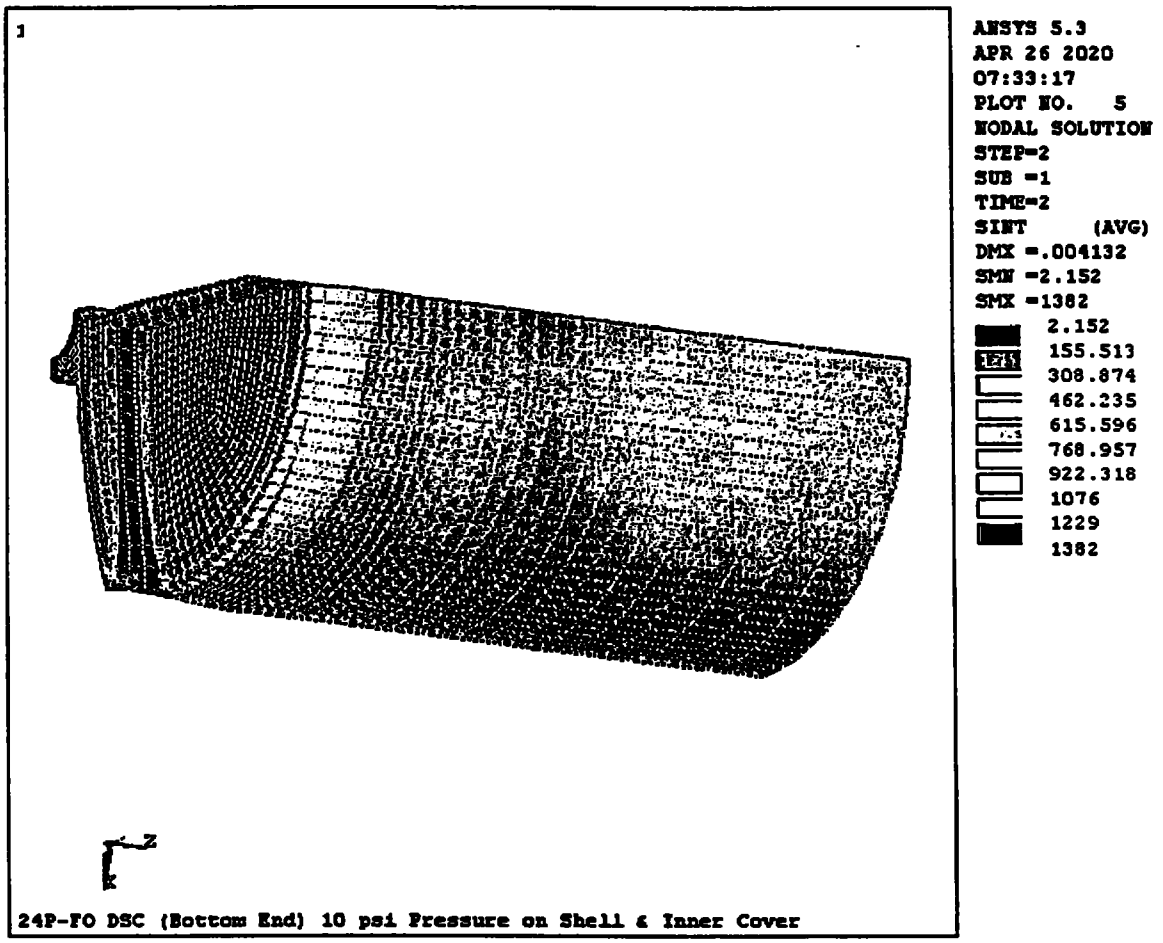

Figure B15-2

24P-FO DSC Shell Assembly, Bottom End Components

Stress Intensity Contour

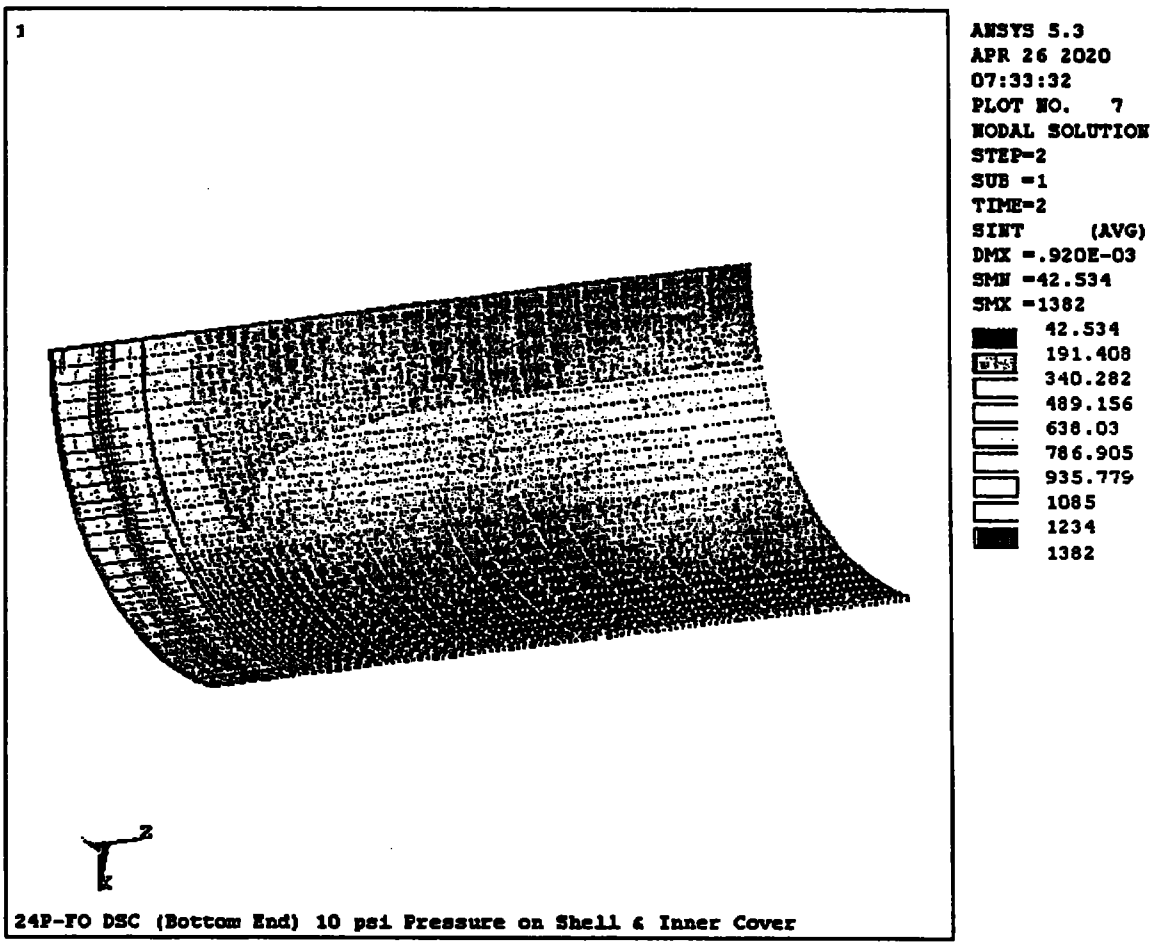

Figure B15-3

24P-FO DSC Shell Assembly, Cylindrical Shell (Bottom Half)

Stress Intensity Contour

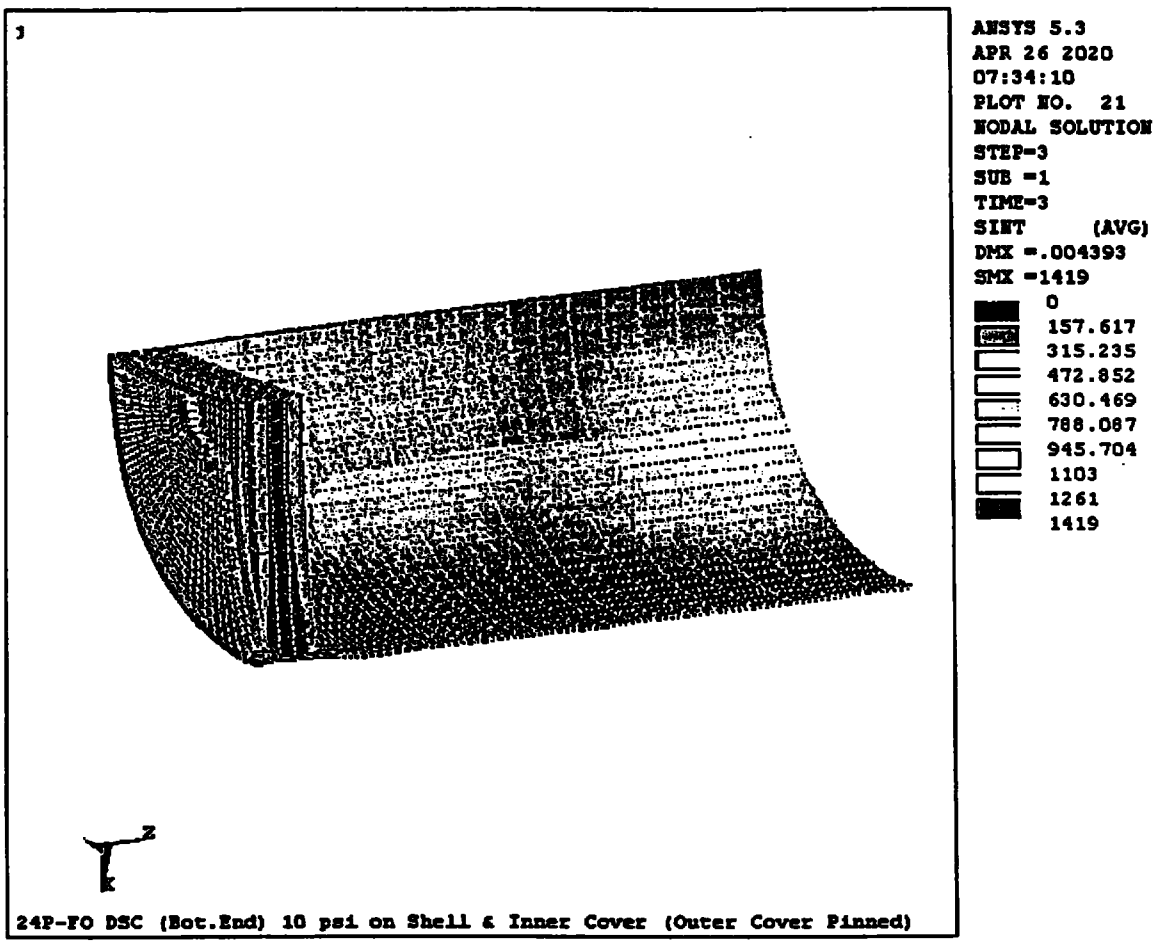

Figure B15-4

24P-FO DSC Shell Assembly, Bottom End Components

Stress Intensity Contour

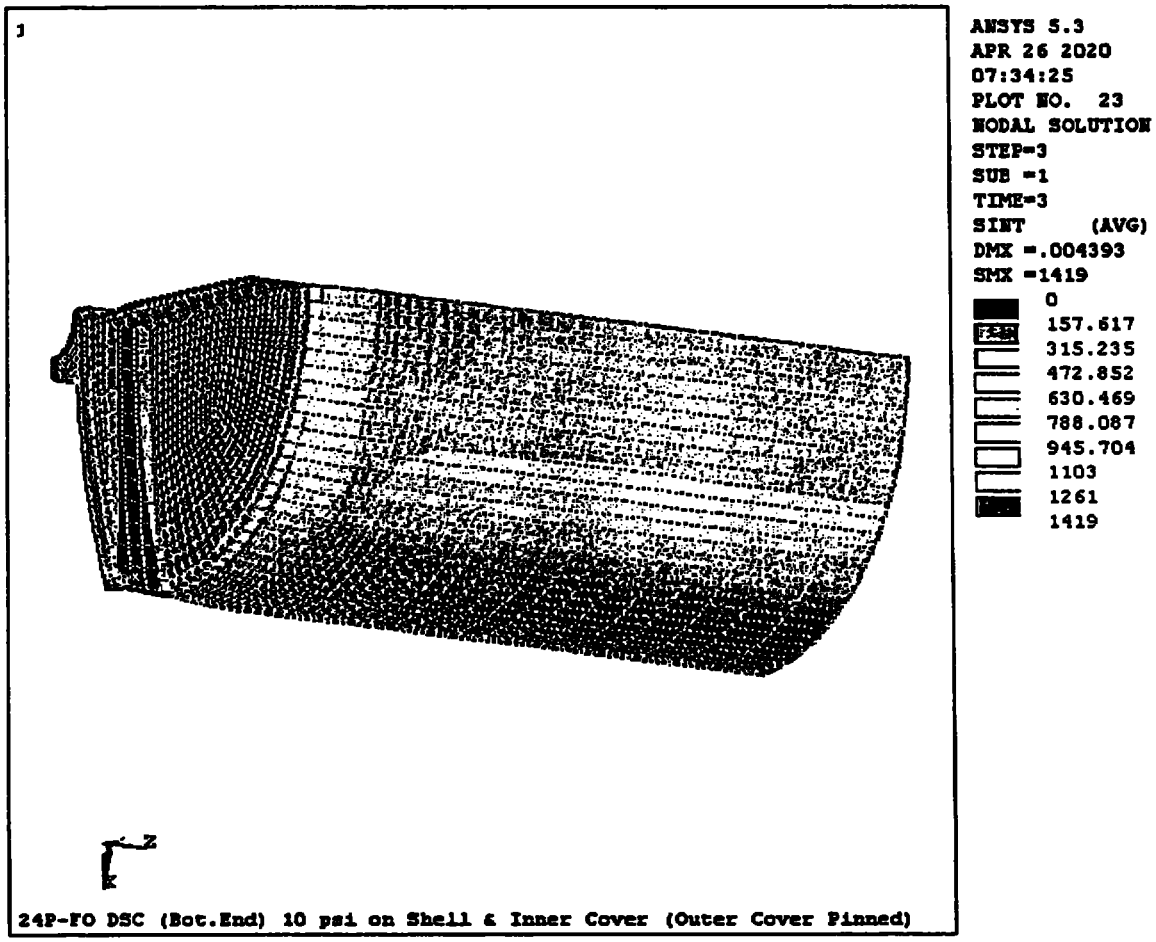

Figure B15-5

24P-FO DSC Shell Assembly, Bottom End Components

Stress Intensity Contour

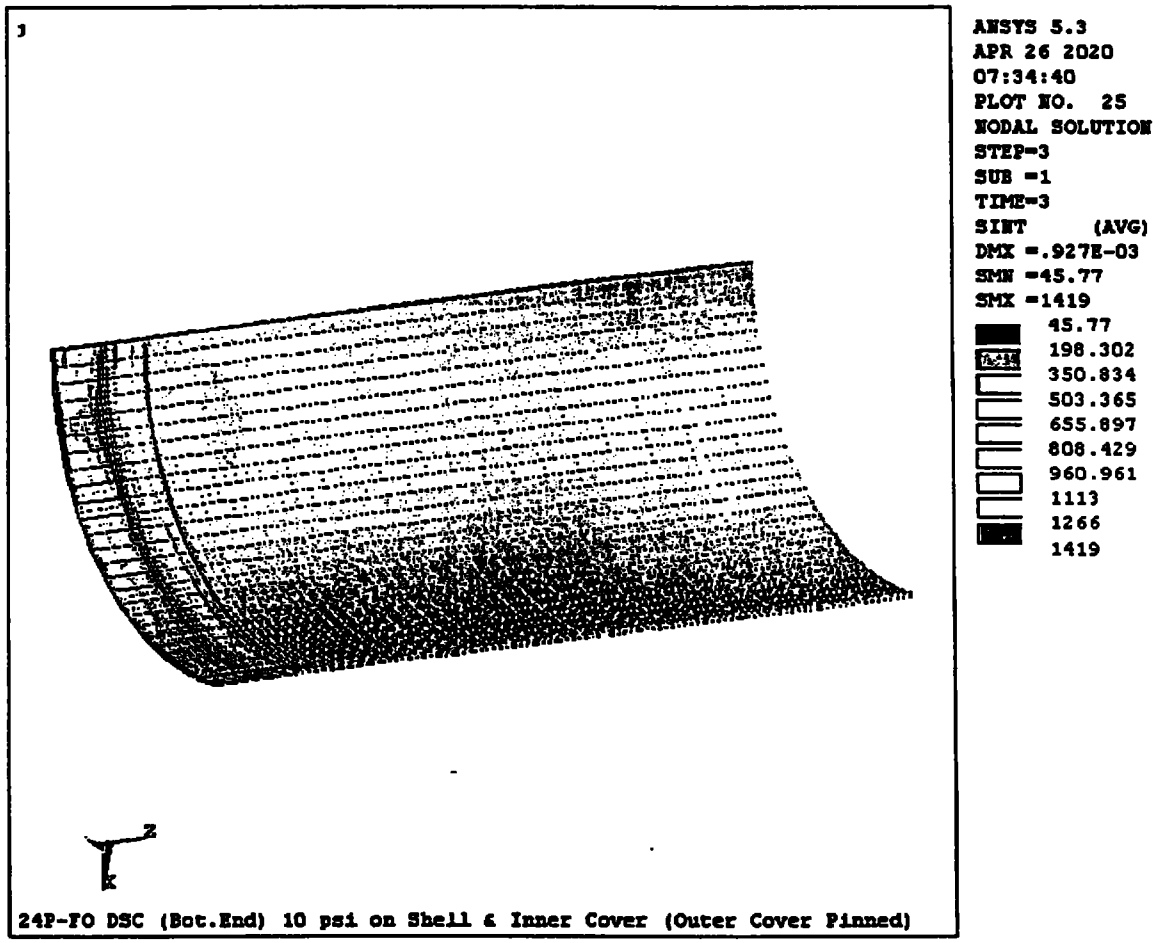

Figure B15-6

24P-FO DSC Shell Assembly, Cylindrical Shell (Bottom Half)

Stress Intensity Contour

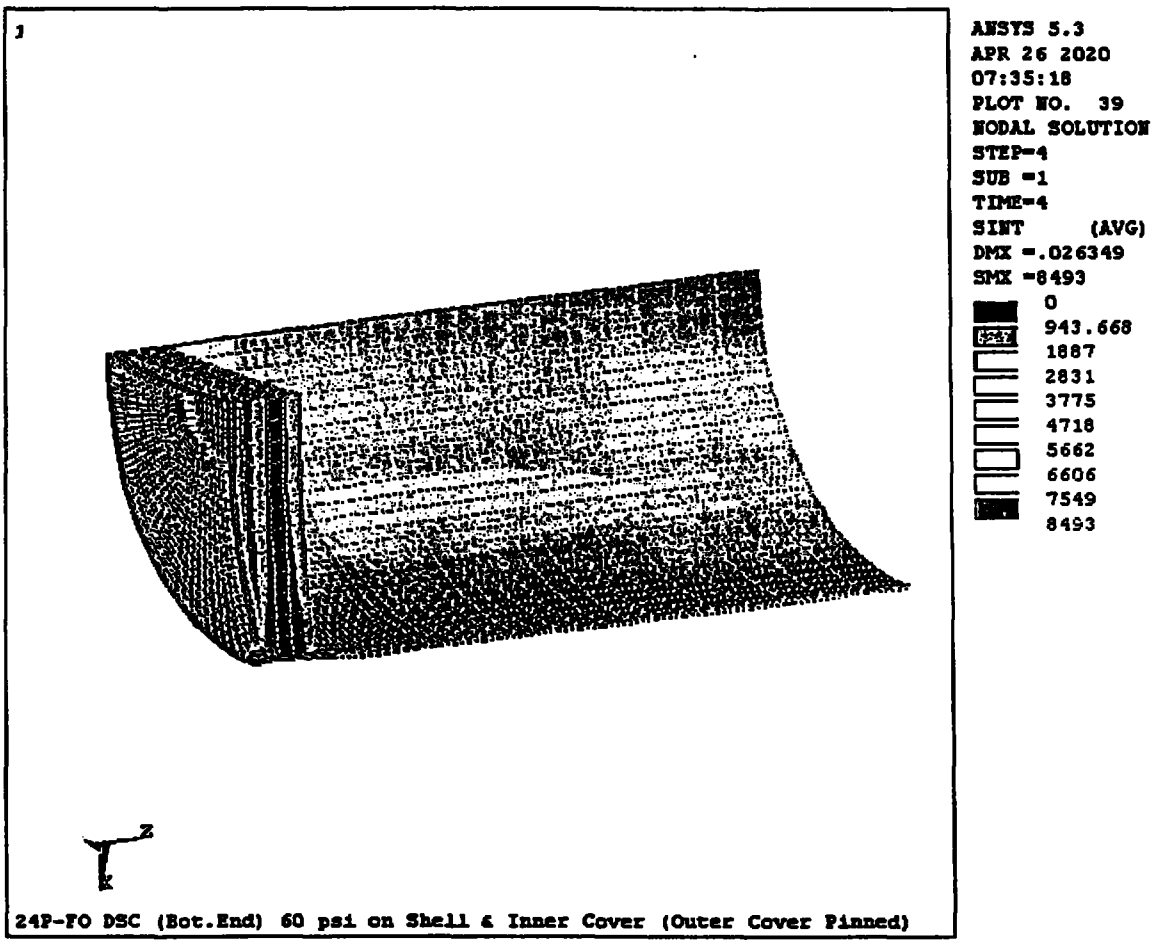

Figure B15-7

24P-FO DSC Shell Assembly, Bottom End Components

Stress Intensity Contour

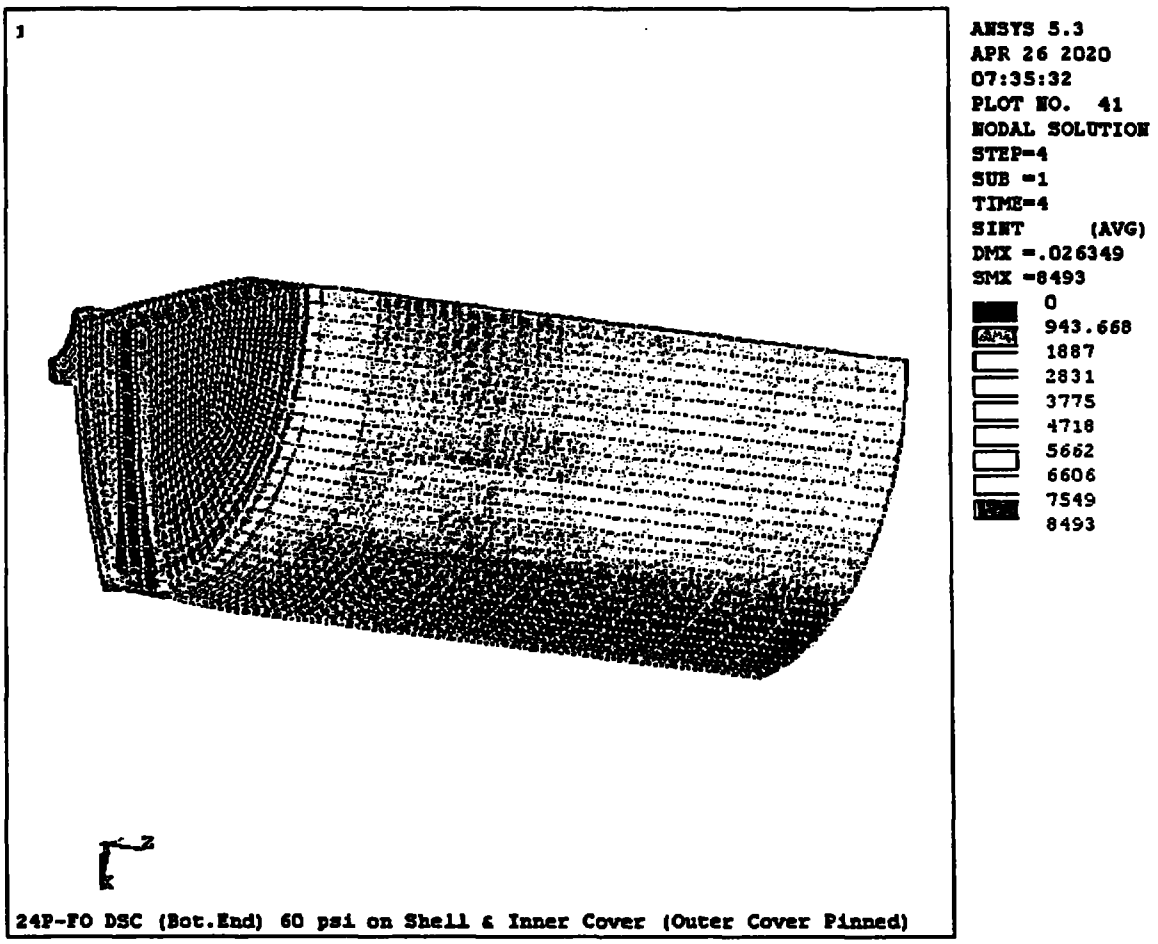

Figure B15-8

24P-FO DSC Shell Assembly, Bottom End Components

Stress Intensity Contour

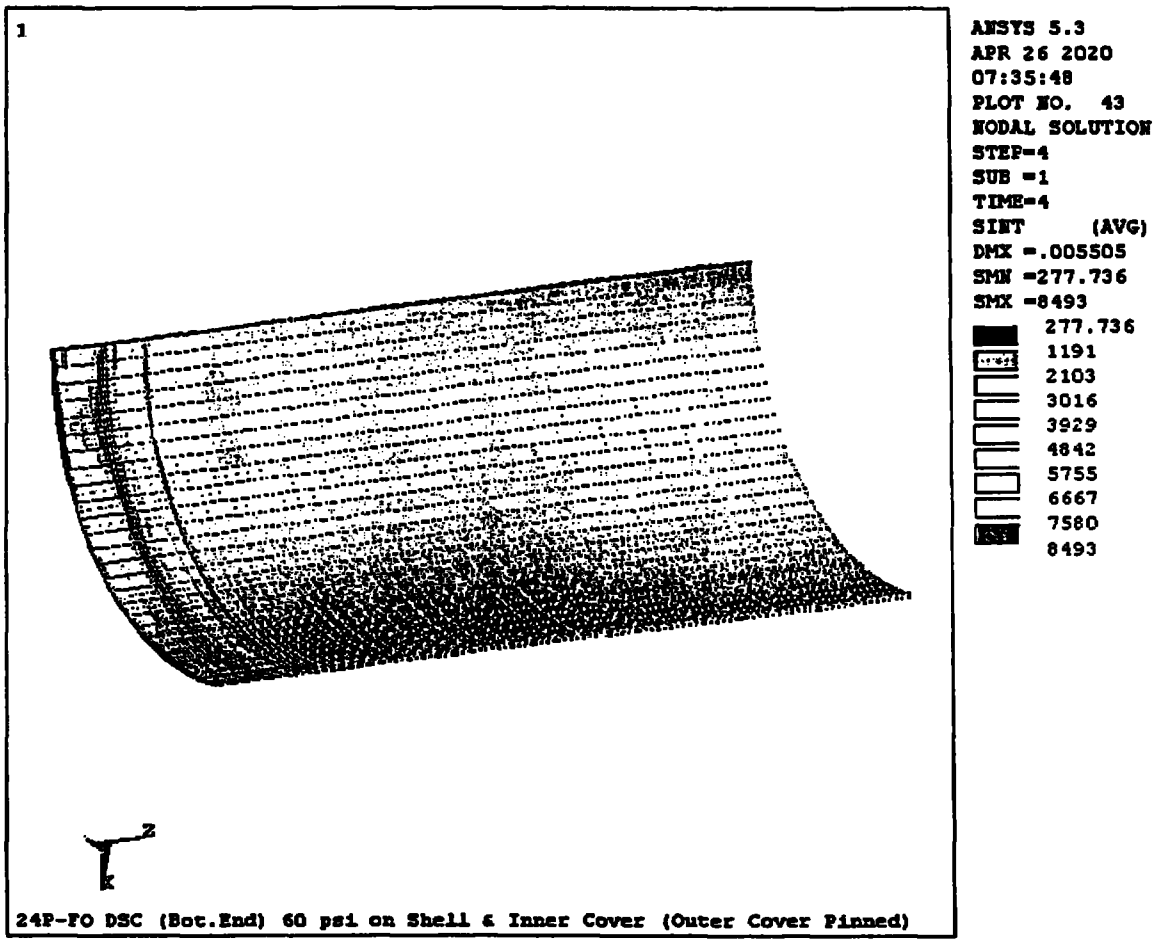

Figure B15-9

24P-FO DSC Shell Assembly, Cylindrical Shell (Bottom Half)

Stress Intensity Contour

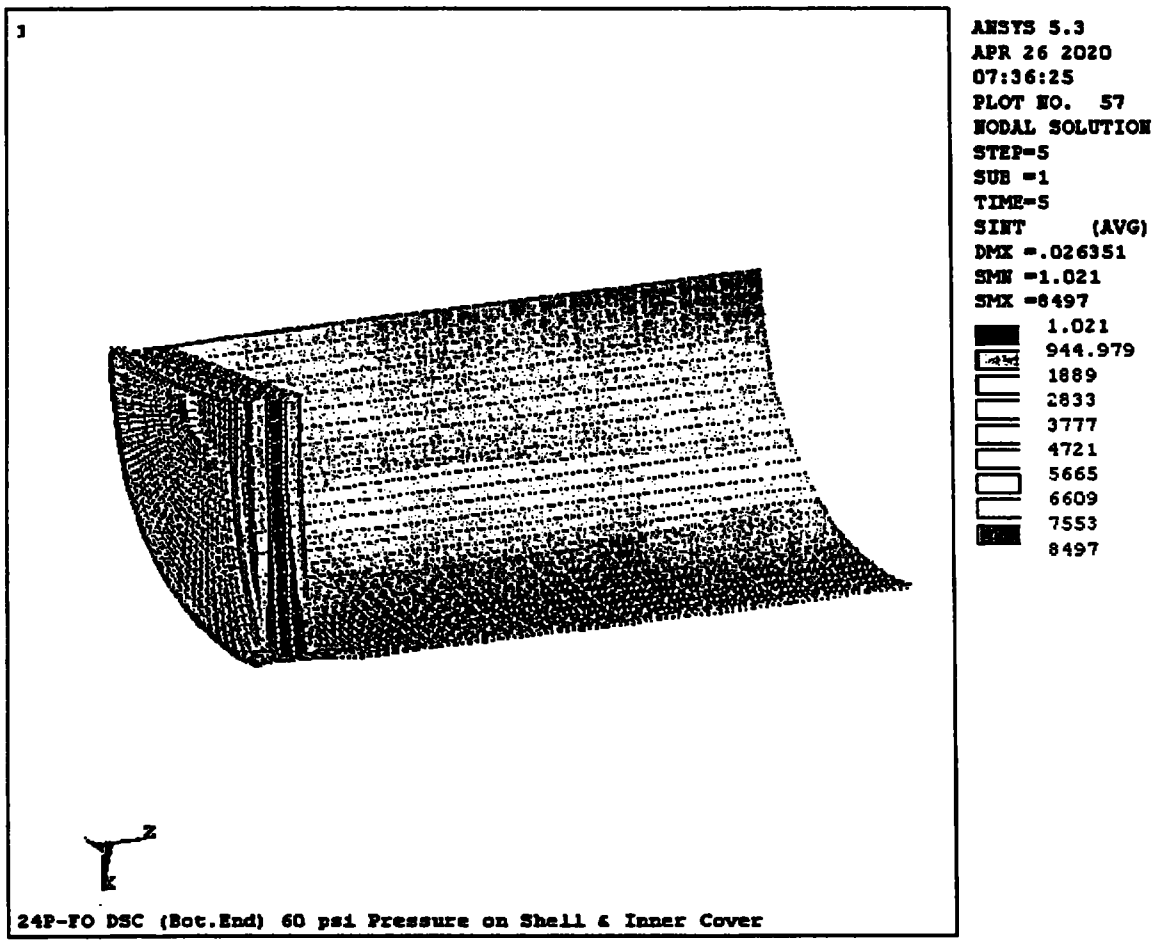

Figure B15-10

24P-FO DSC Shell Assembly, Bottom End Components

Stress Intensity Contour

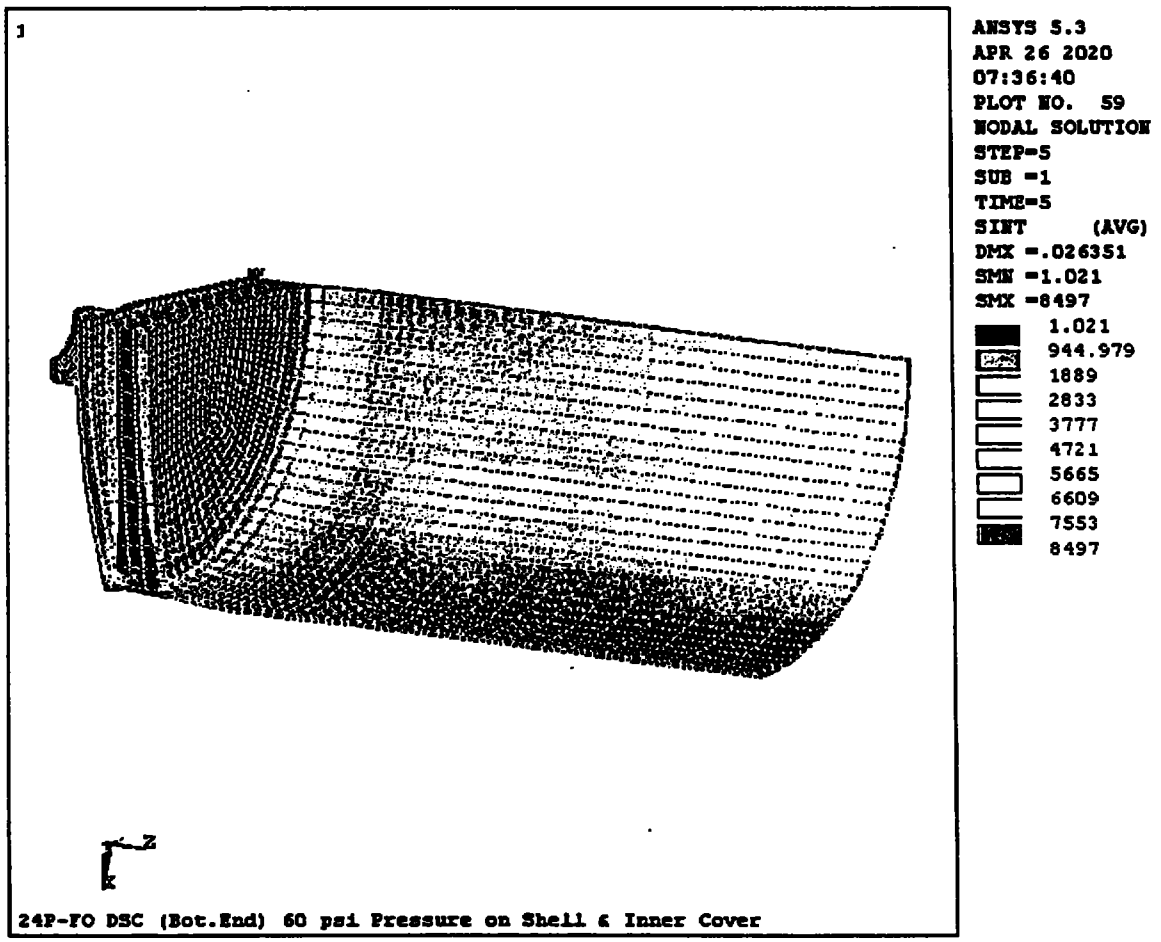

Figure B15-11

24P-FO DSC Shell Assembly, Bottom End Components

Stress Intensity Contour

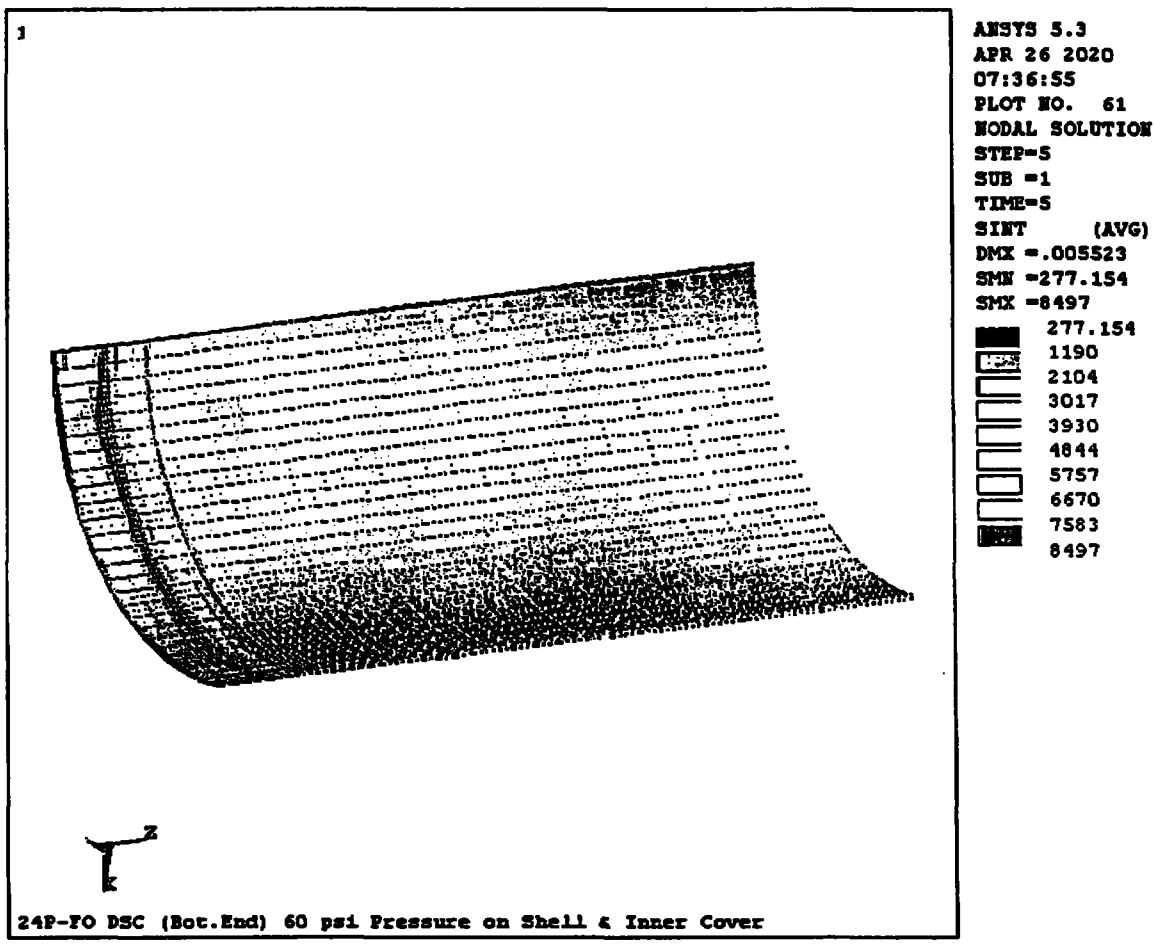
1
ANSYS 5.3
APR 26 2020
07:36:55
PLOT NO. 61
NODAL SOLUTION
STEP=5
SUB =1
TIME=5
SINT (AVG)
DMX =.005523
SMN =277.154
SMX =8497
277.154
1190
2104
3017
3930
4844
5757
6670
7583
8497
Z
Y
X
24P-FO DSC (Bot.End) 60 psi Pressure on Shell & Inner Cover

Appendix B16

ANSYS Stress Intensity Contour Plots for Run PB24PFL

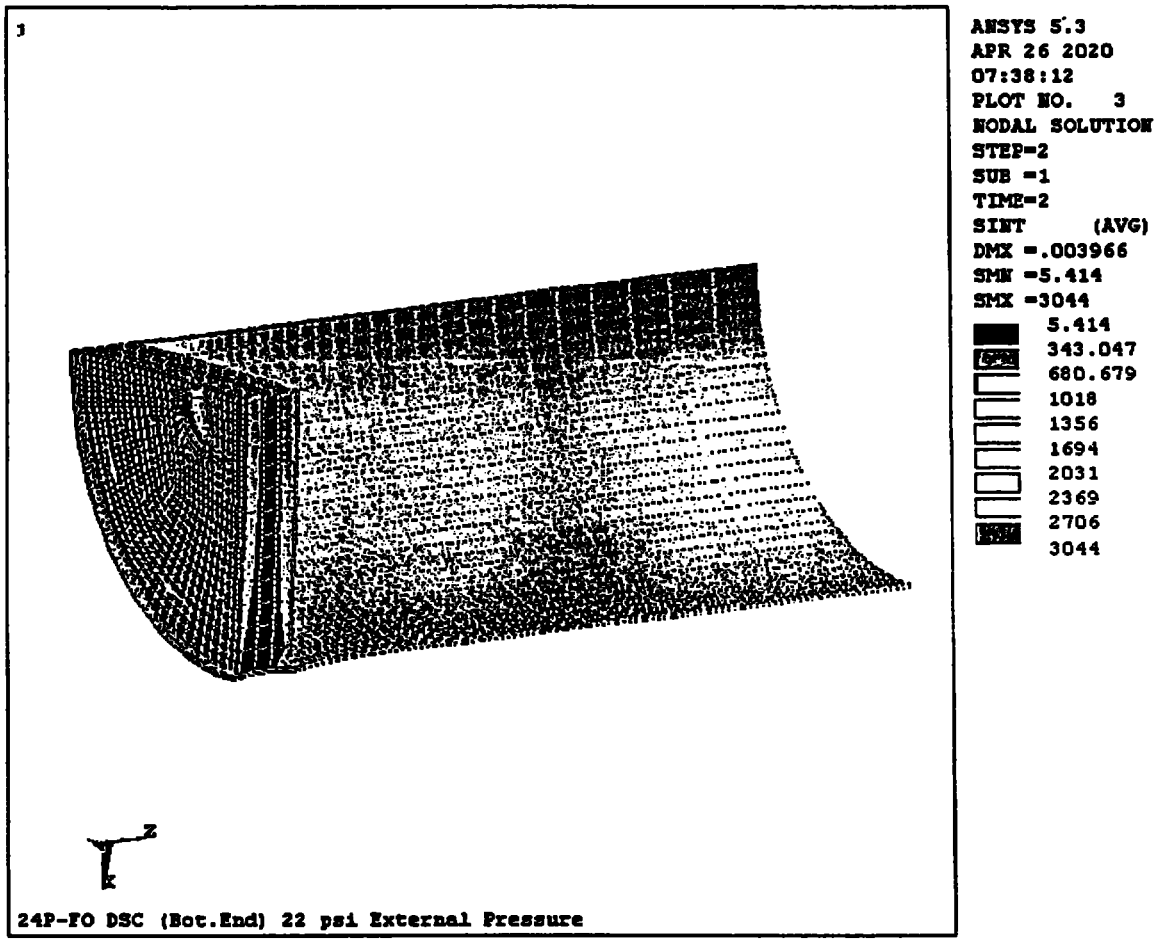

Figure B16-1

24P-FO DSC Shell Assembly, Cylindrical Shell (Bottom Half)

Stress Intensity Contour

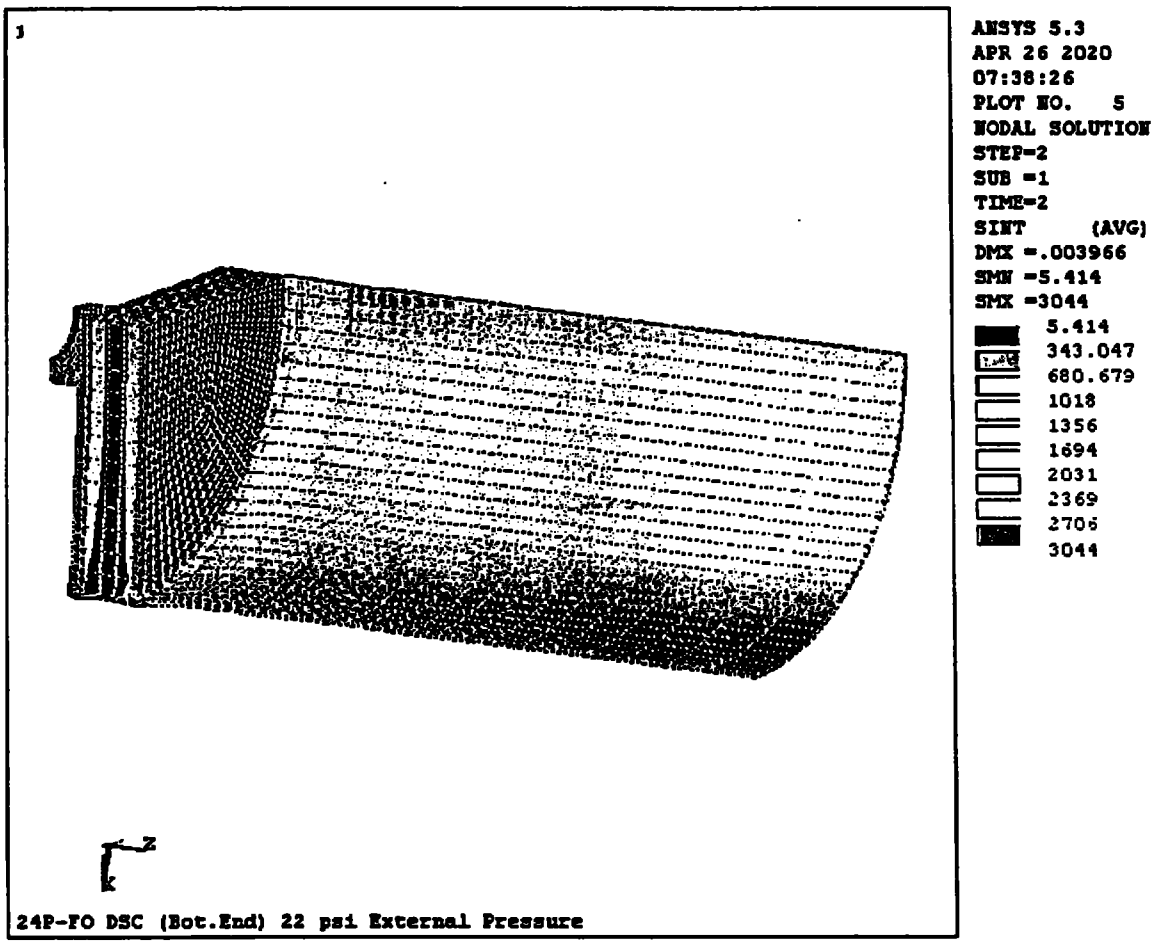

Figure B16-2

24P-FO DSC Shell Assembly, Bottom End Components

Stress Intensity Contour

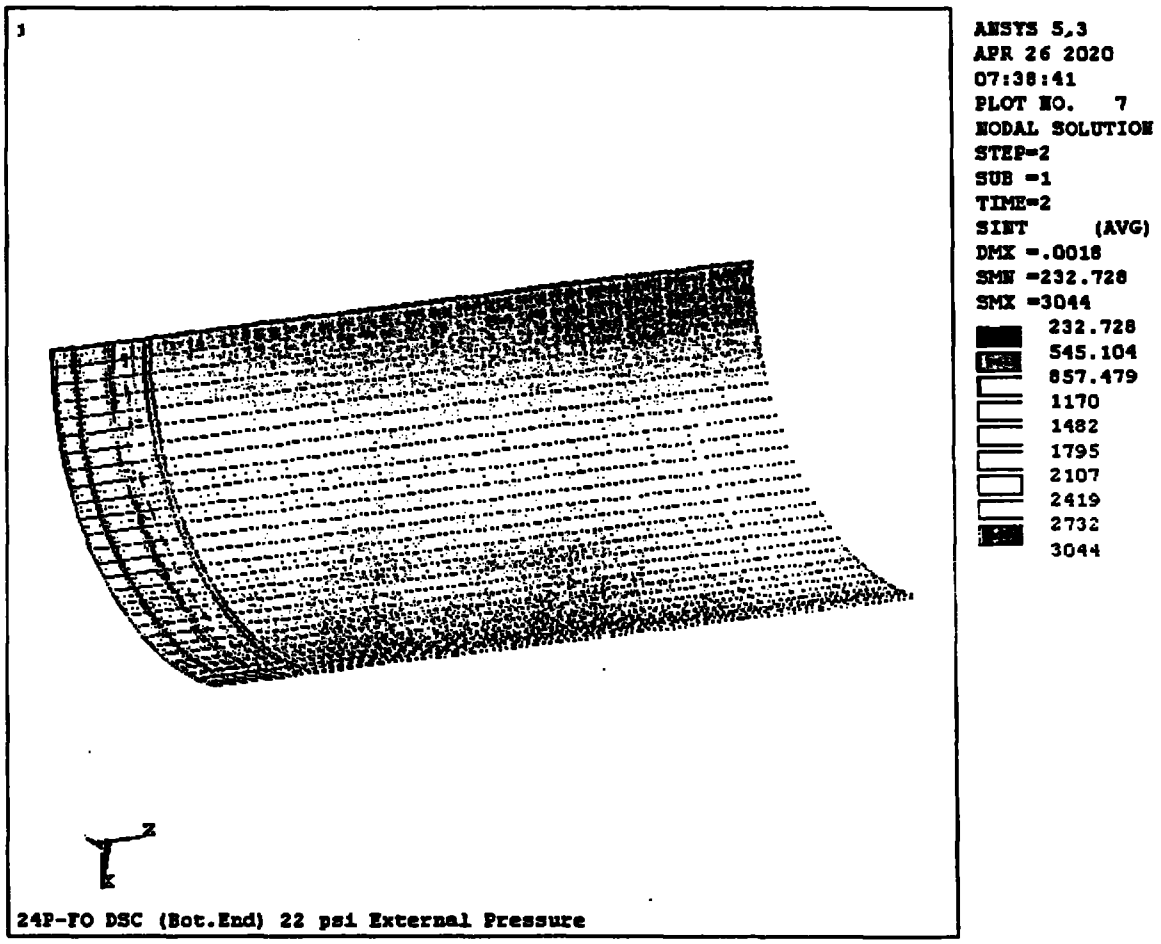

Figure B16-3

24P-FO DSC Shell Assembly, Cylindrical Shell (Bottom Half)

Stress Intensity Contour

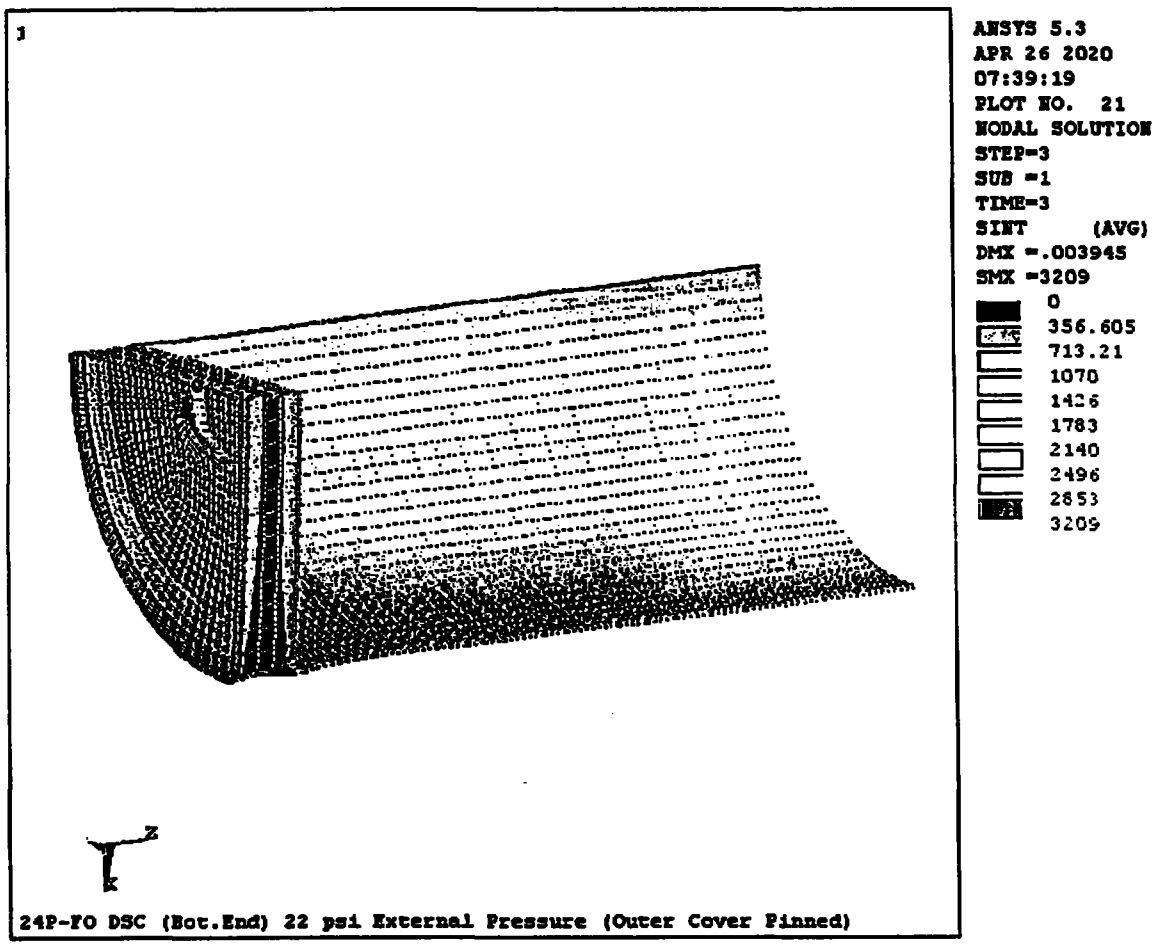

Figure B16-4

24P-FO DSC Shell Assembly, Bottom End Components

Stress Intensity Contour

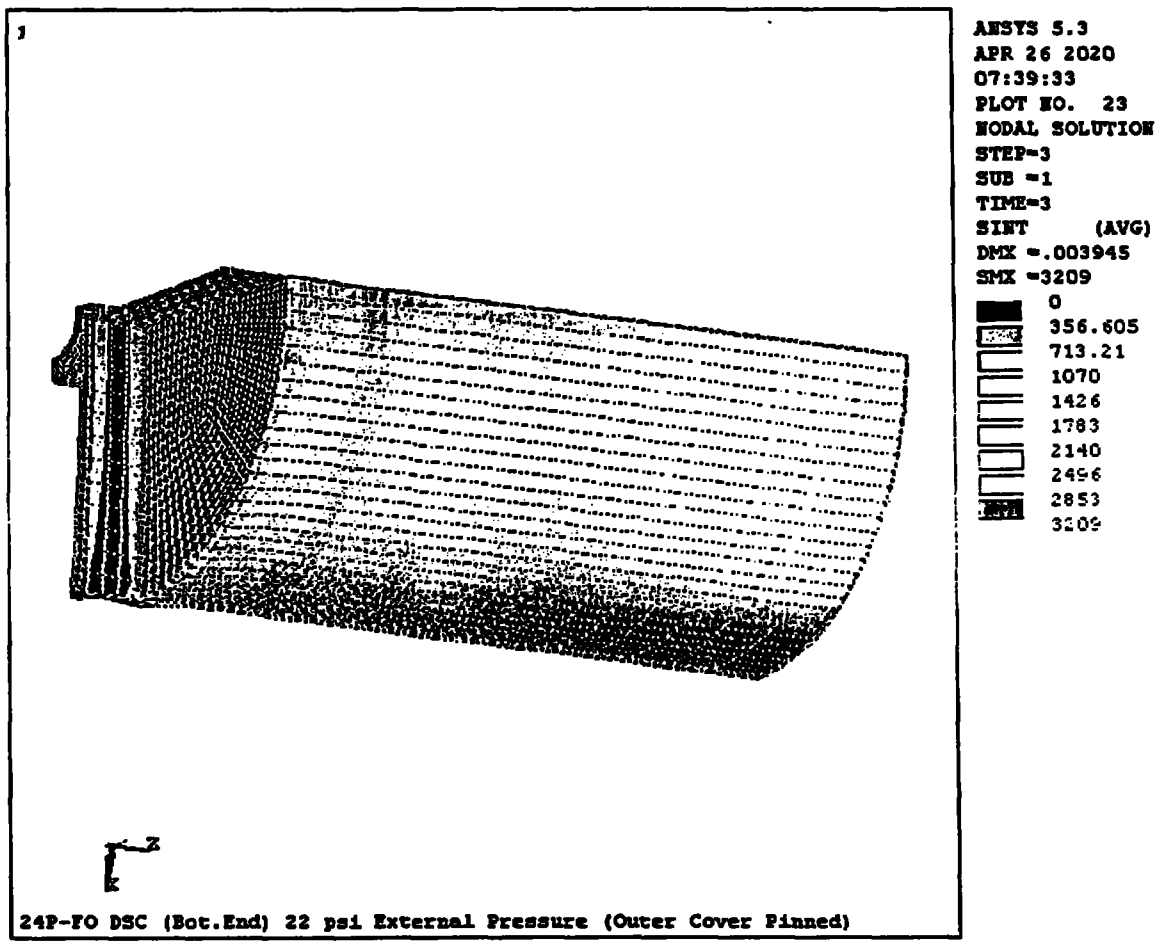

Figure B16-5

24P-FO DSC Shell Assembly, Bottom End Components

Stress Intensity Contour

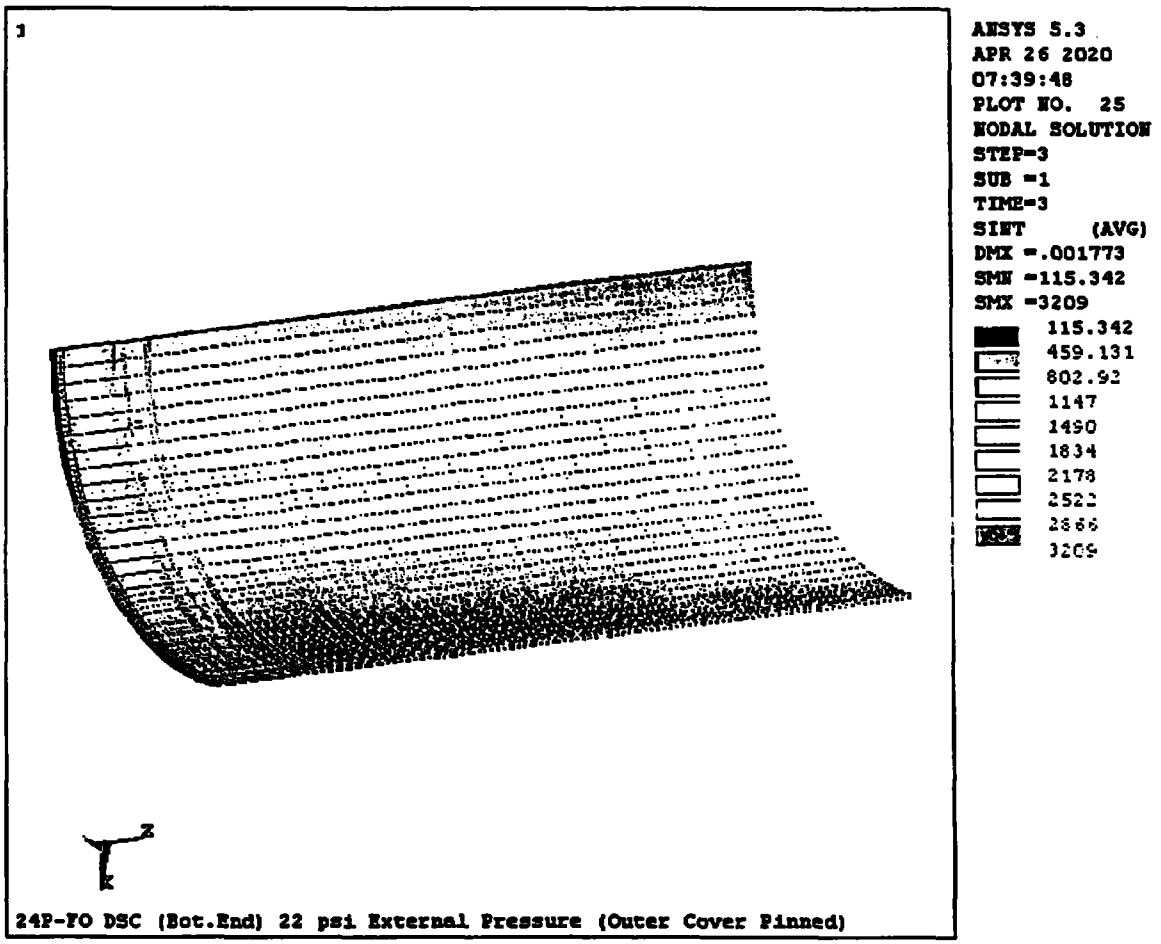

Figure B16-6

24P-FO DSC Shell Assembly, Cylindrical Shell (Bottom Half)

Stress Intensity Contour

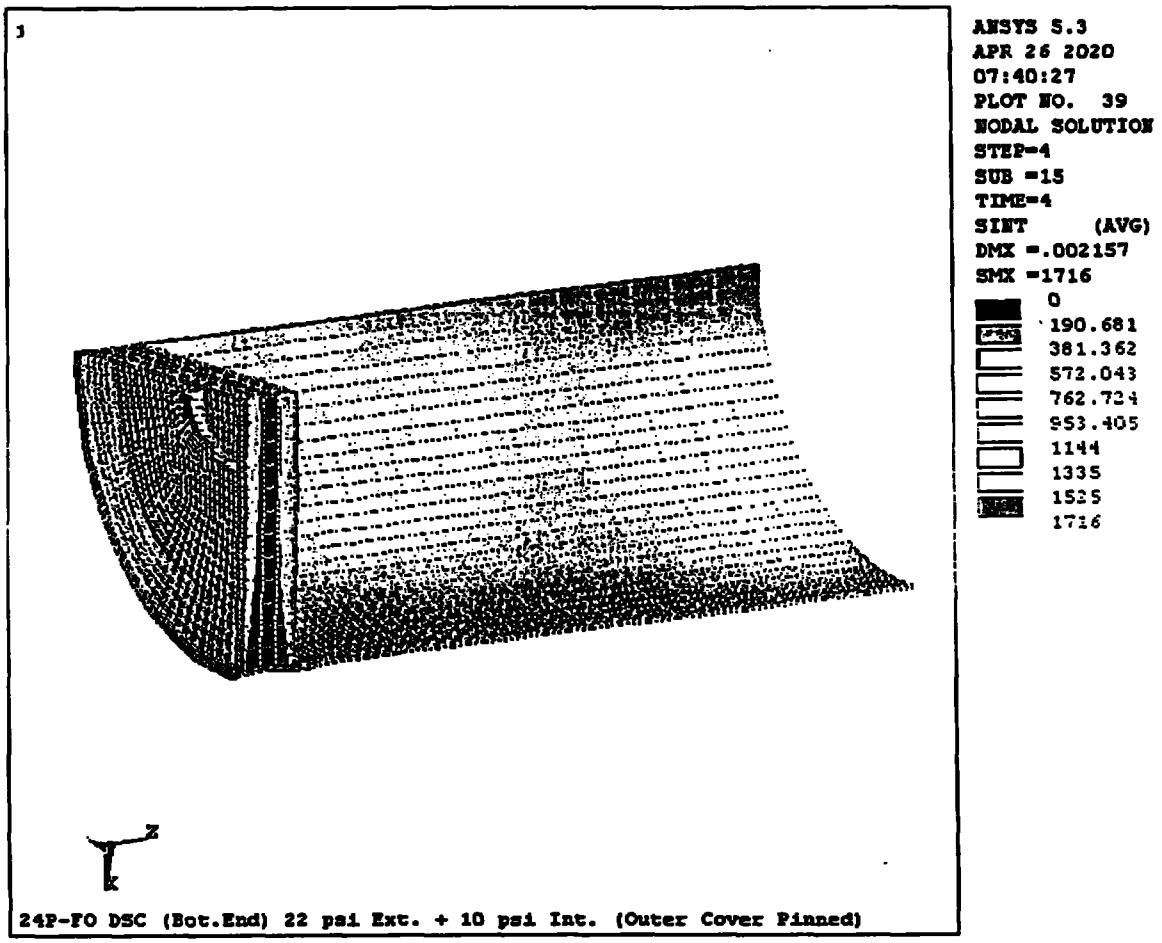

Figure B16-7

24P-FO DSC Shell Assembly, Bottom End Components

Stress Intensity Contour

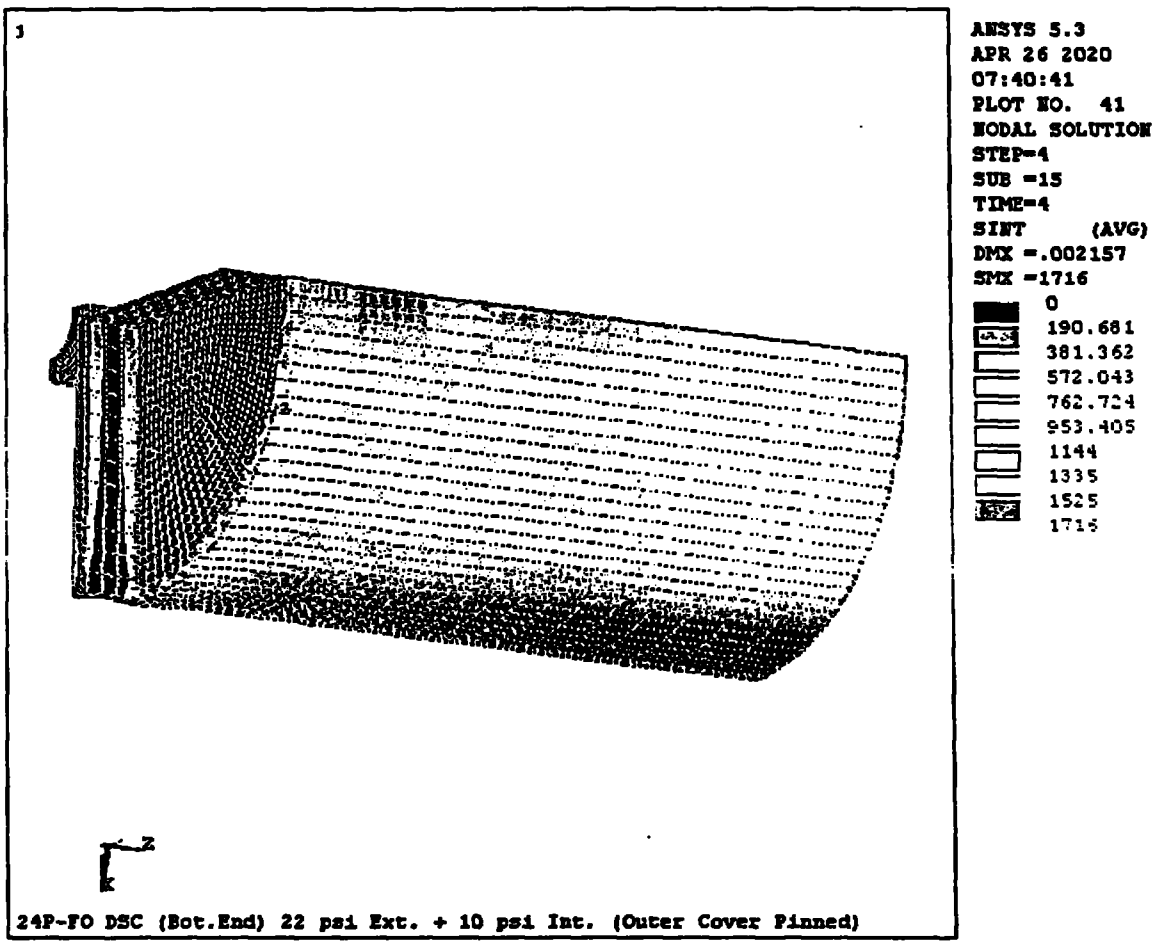

Figure B16-8

24P-FO DSC Shell Assembly, Bottom End Components

Stress Intensity Contour

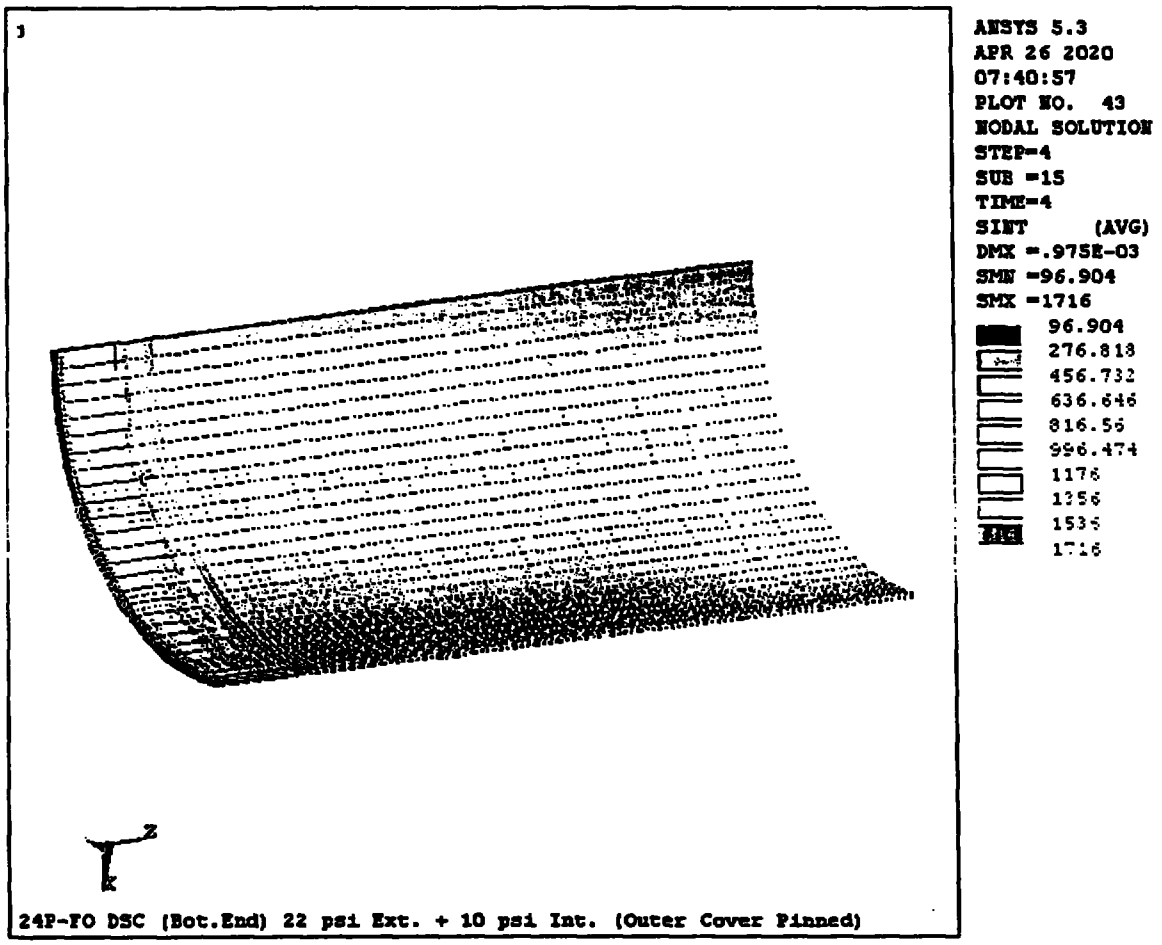

Figure B16-9

24P-FO DSC Shell Assembly, Cylindrical Shell (Bottom Half)

Stress Intensity Contour

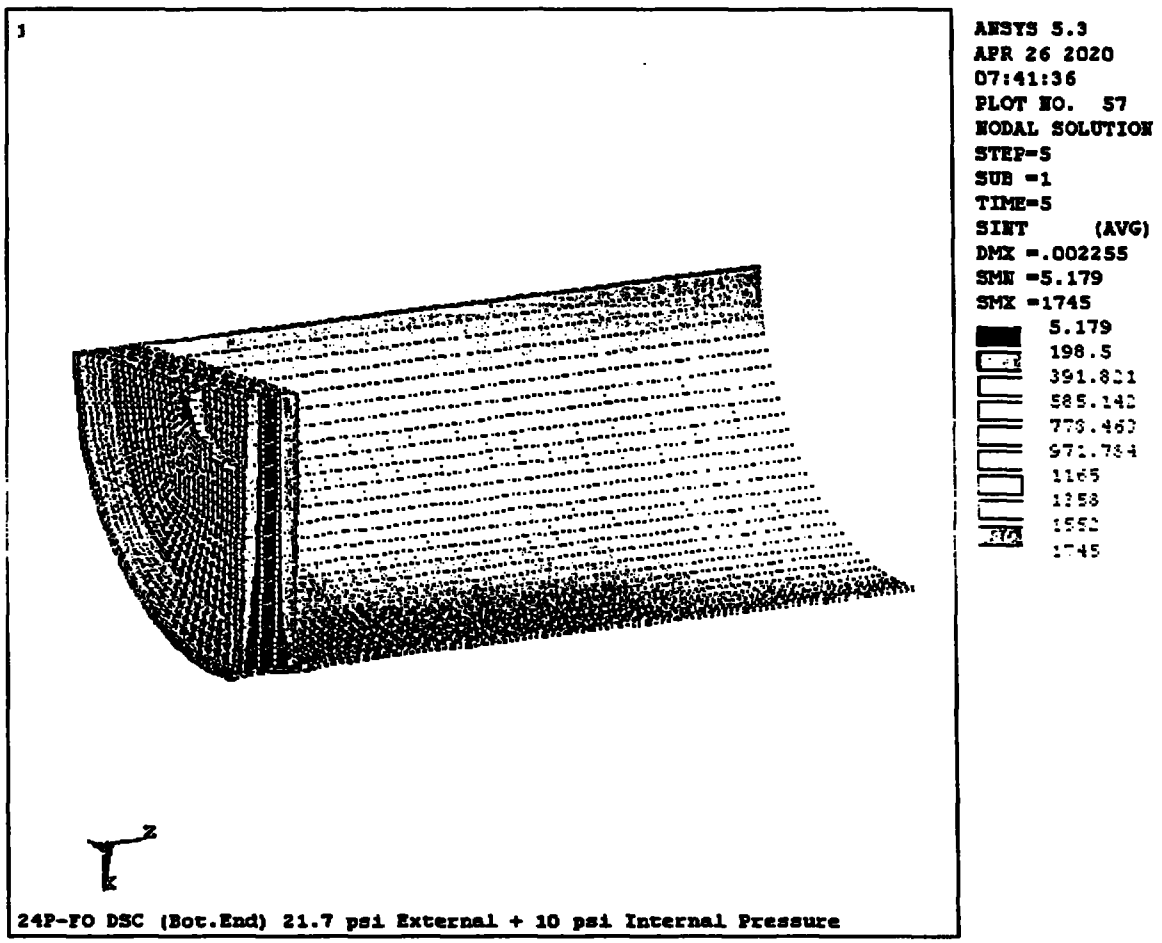

Figure B16-10

24P-FO DSC Shell Assembly, Bottom End Components

Stress Intensity Contour

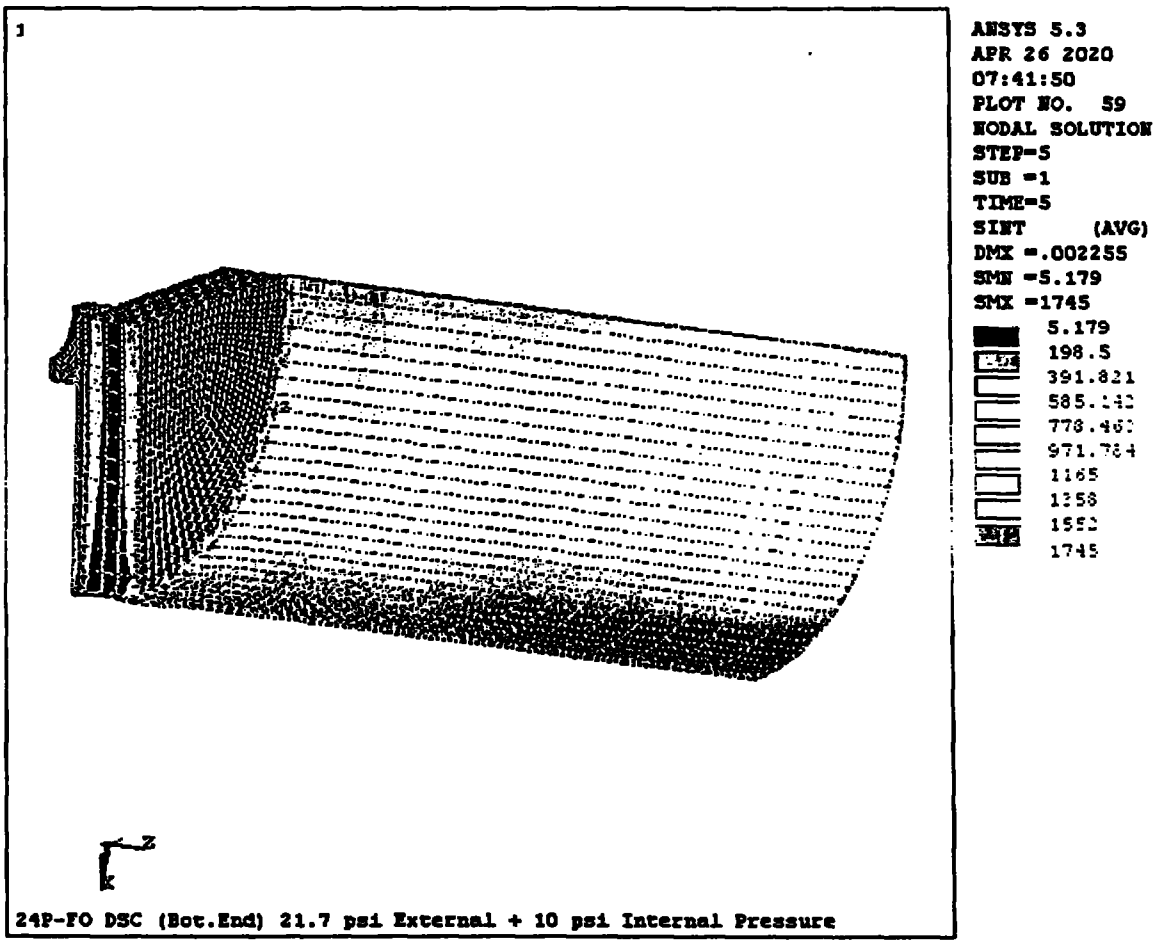

Figure B16-11

24P-FO DSC Shell Assembly, Bottom End Components

Stress Intensity Contour

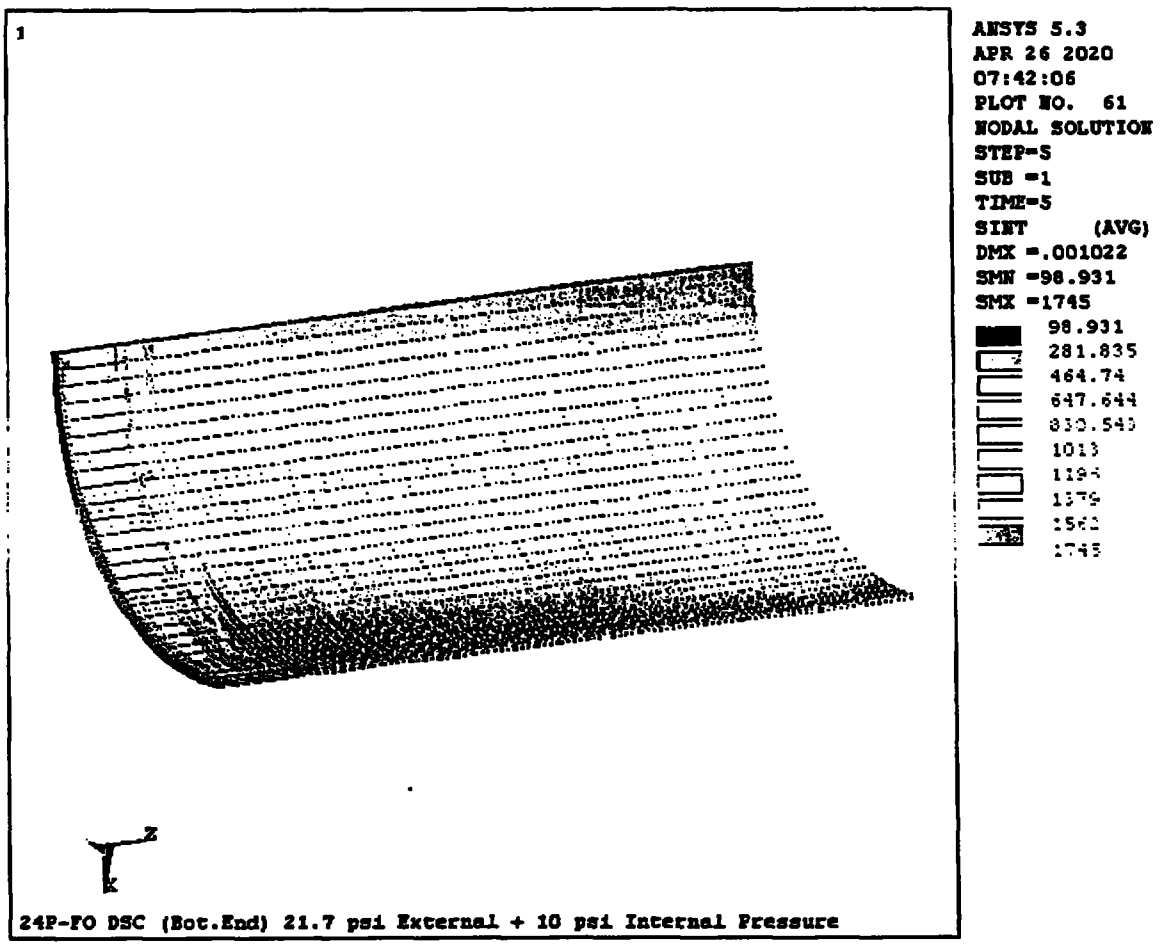

Figure B16-12

24P-FO DSC Shell Assembly, Cylindrical Shell (Bottom Half)

Stress Intensity Contour

Appendix B17

ANSYS Stress Intensity Contour Plots for Run PB24P1G

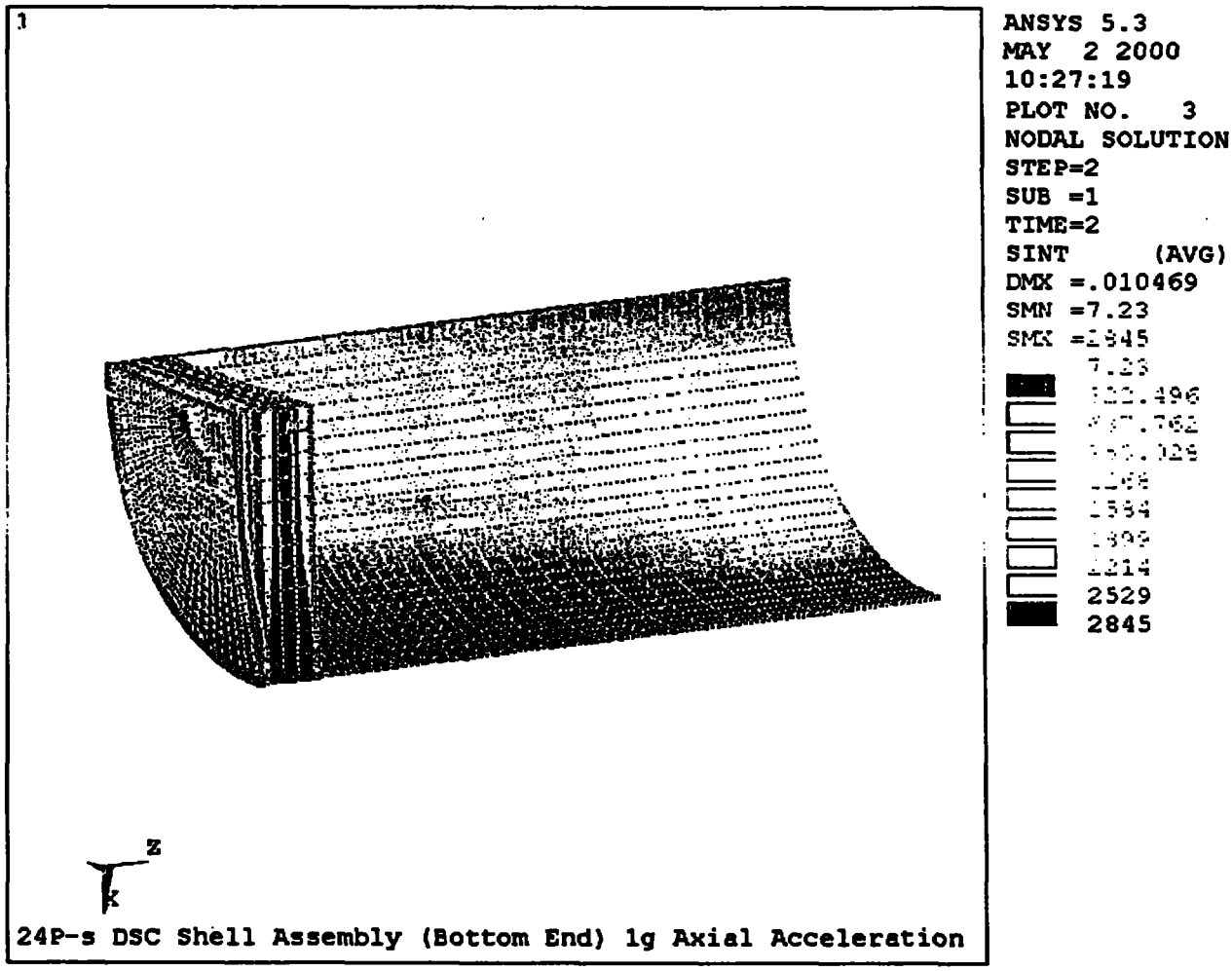

Figure B17-1

24P-FO DSC Shell Assembly, Bottom End Components

Stress Intensity Contour

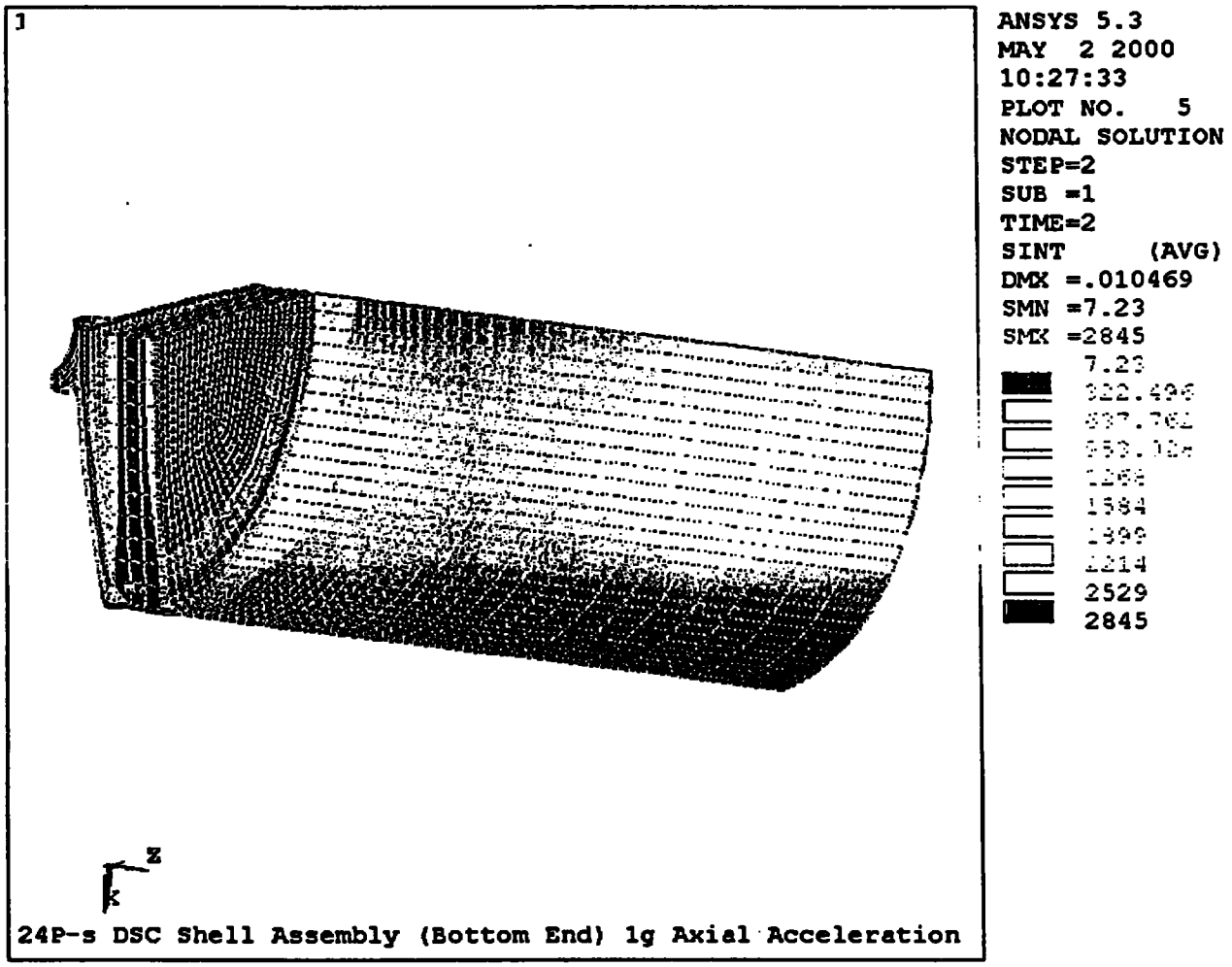

Figure B17-2

24P-FO DSC Shell Assembly, Bottom End Components

Stress Intensity Contour

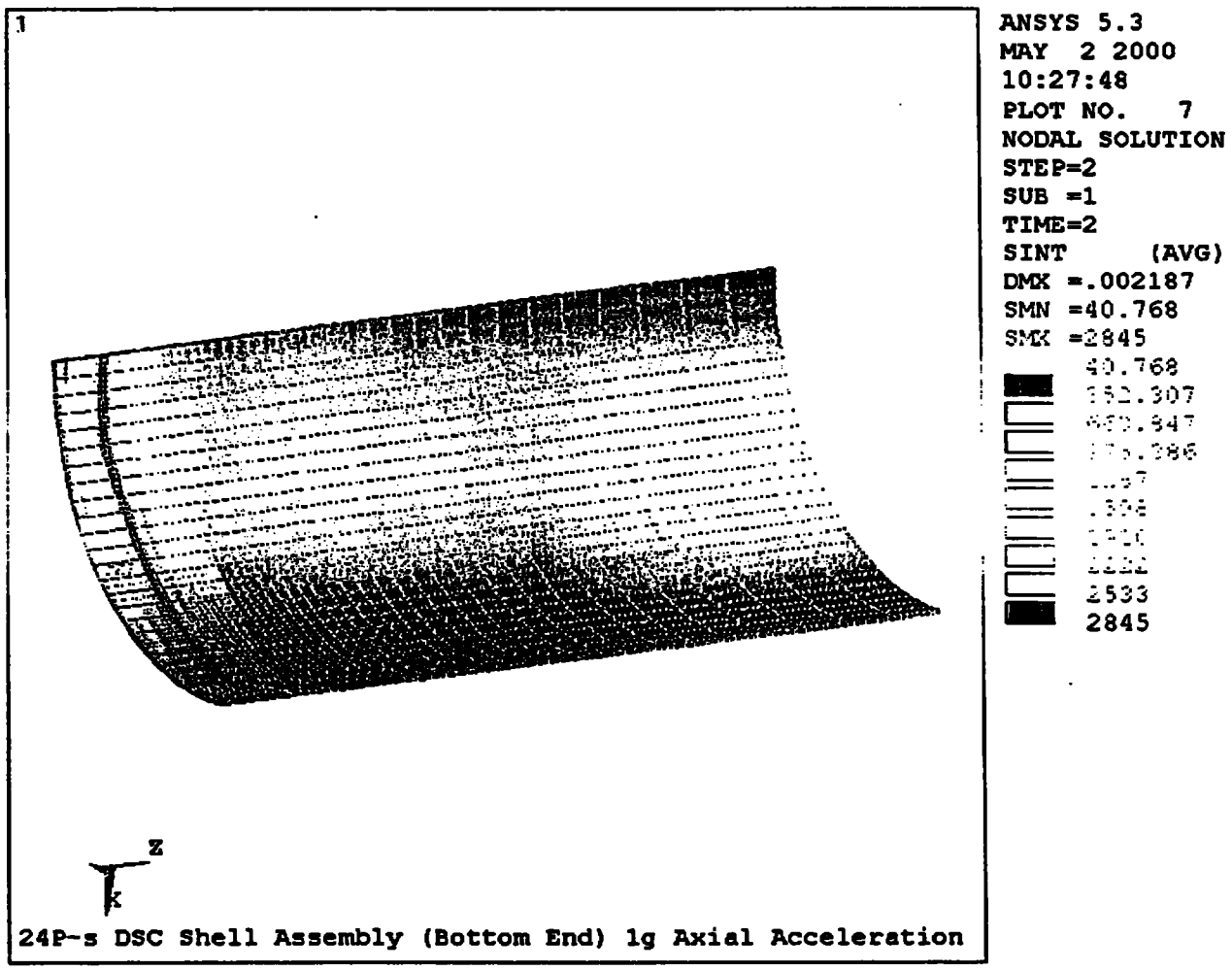

Figure B17-3

24P-FO DSC Shell Assembly, Cylindrical Shell (Bottom Half)

Stress Intensity Contour

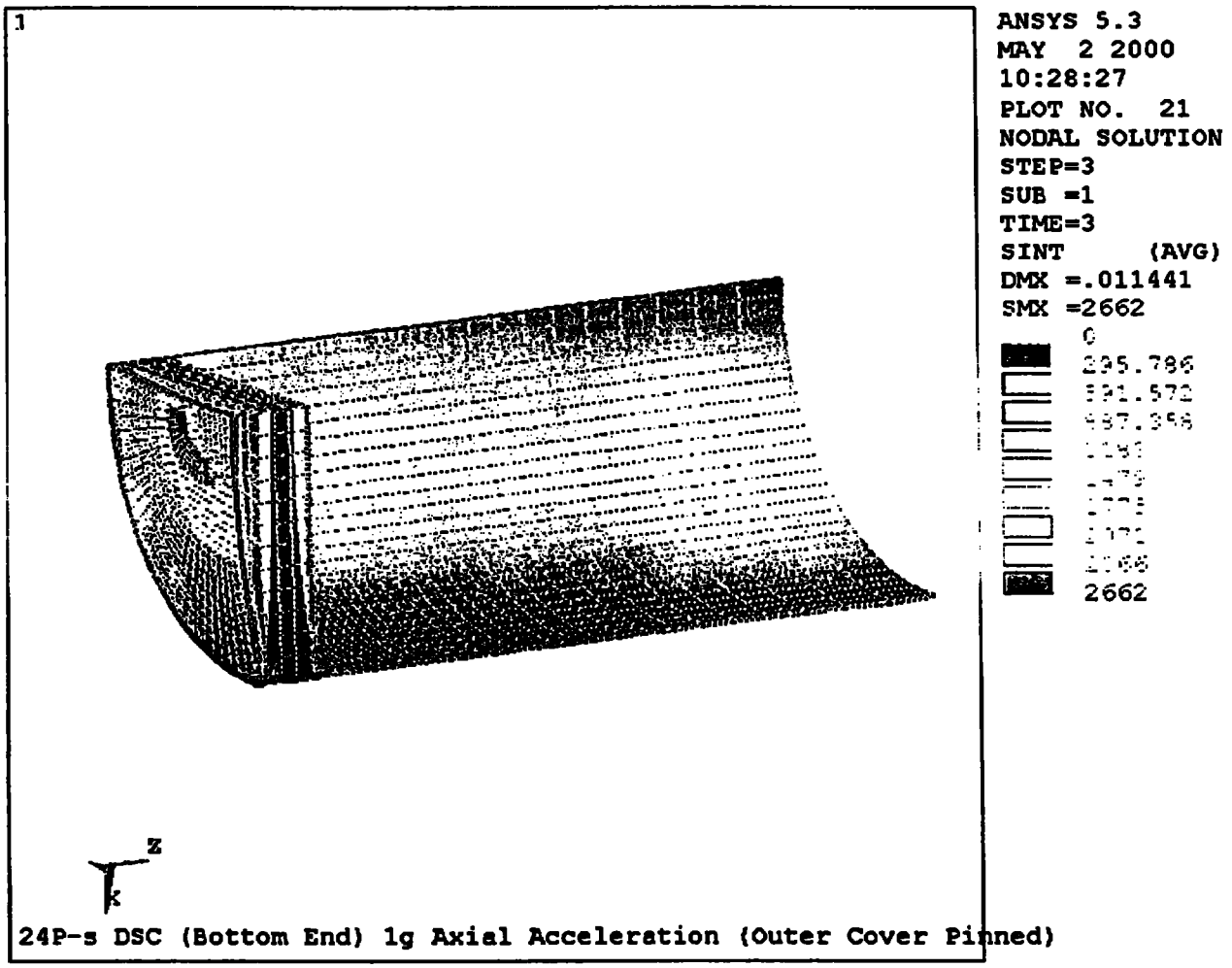

Figure B17-4

24P-FO DSC Shell Assembly, Bottom End Components

Stress Intensity Contour

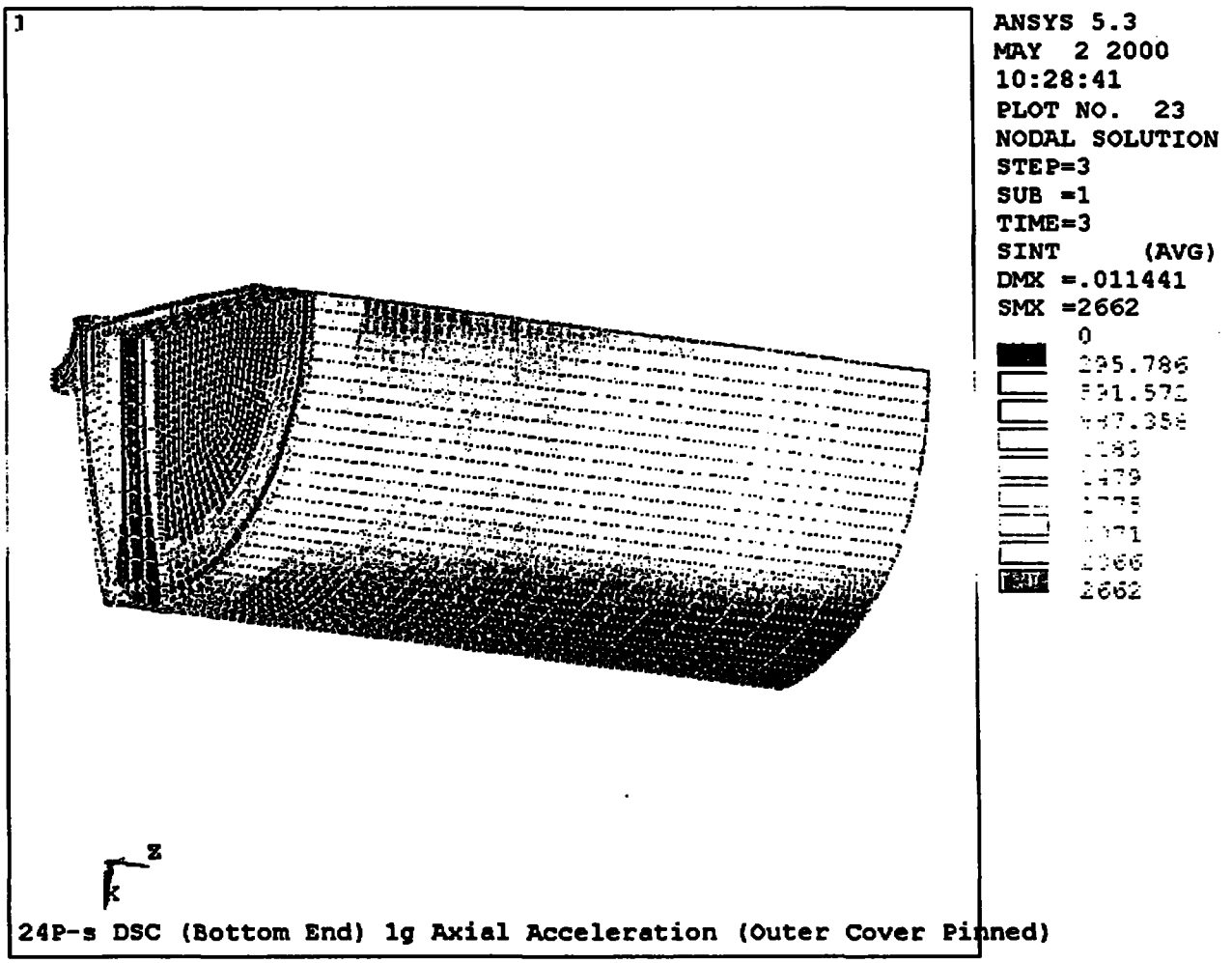

Figure B17-5

24P-FO DSC Shell Assembly, Bottom End Components

Stress Intensity Contour

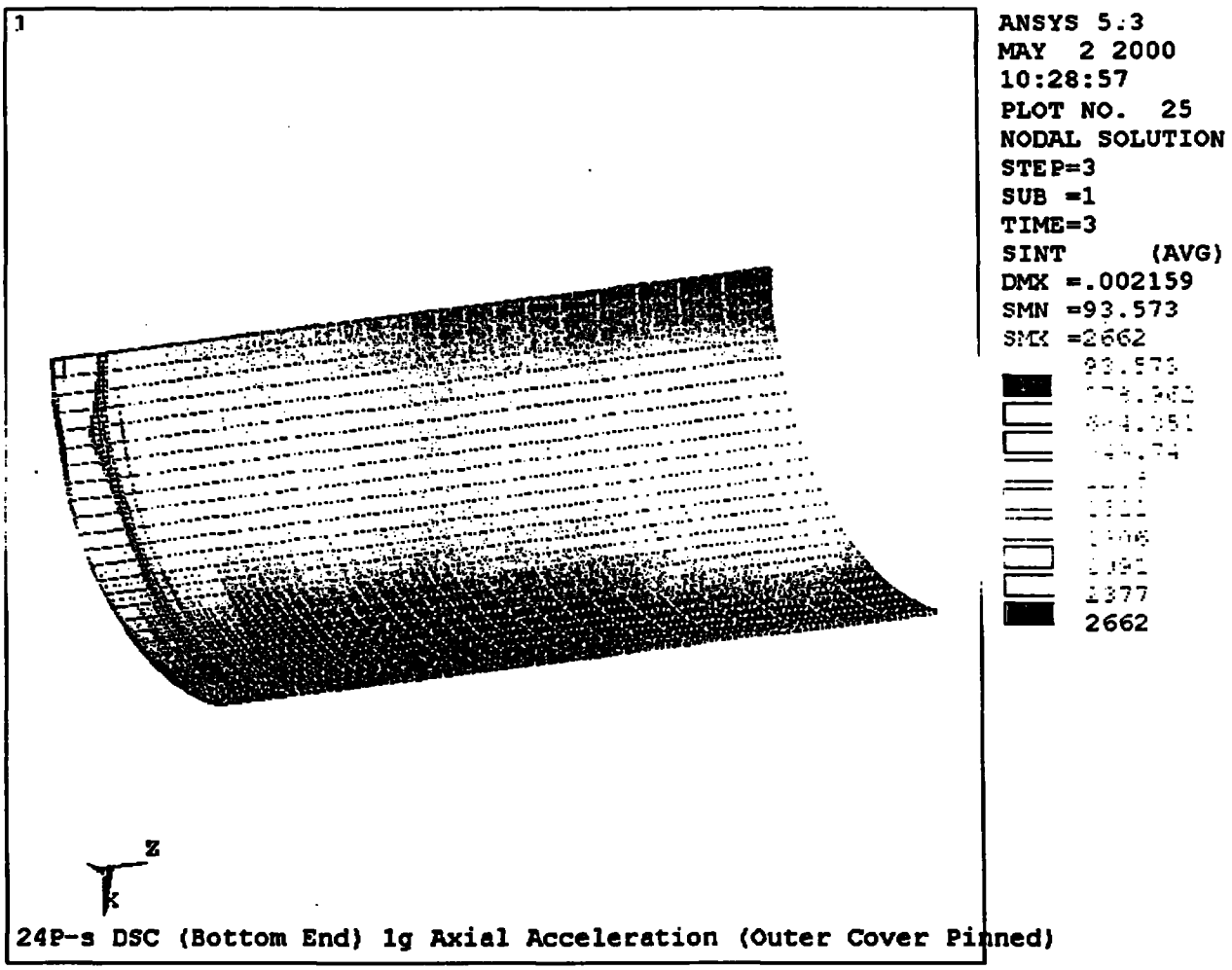

Figure B17-6

24P-FO DSC Shell Assembly, Cylindrical Shell (Bottom Half)

Stress Intensity Contour

Appendix B18

ANSYS Stress Intensity Contour Plots for Run PB24PDW

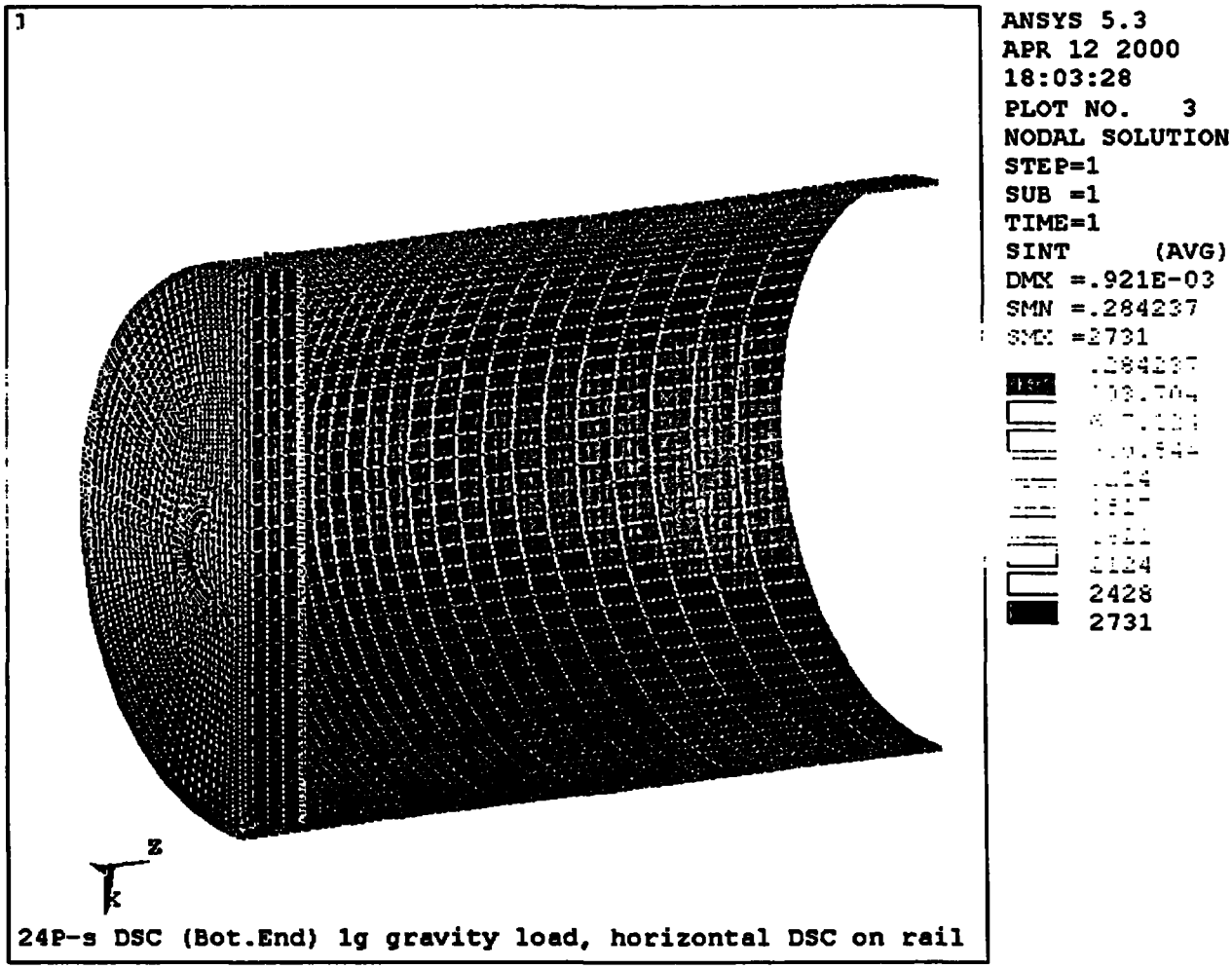

Figure B18-1

24P-FO DSC Shell Assembly, Bottom End Components

Stress Intensity Contour

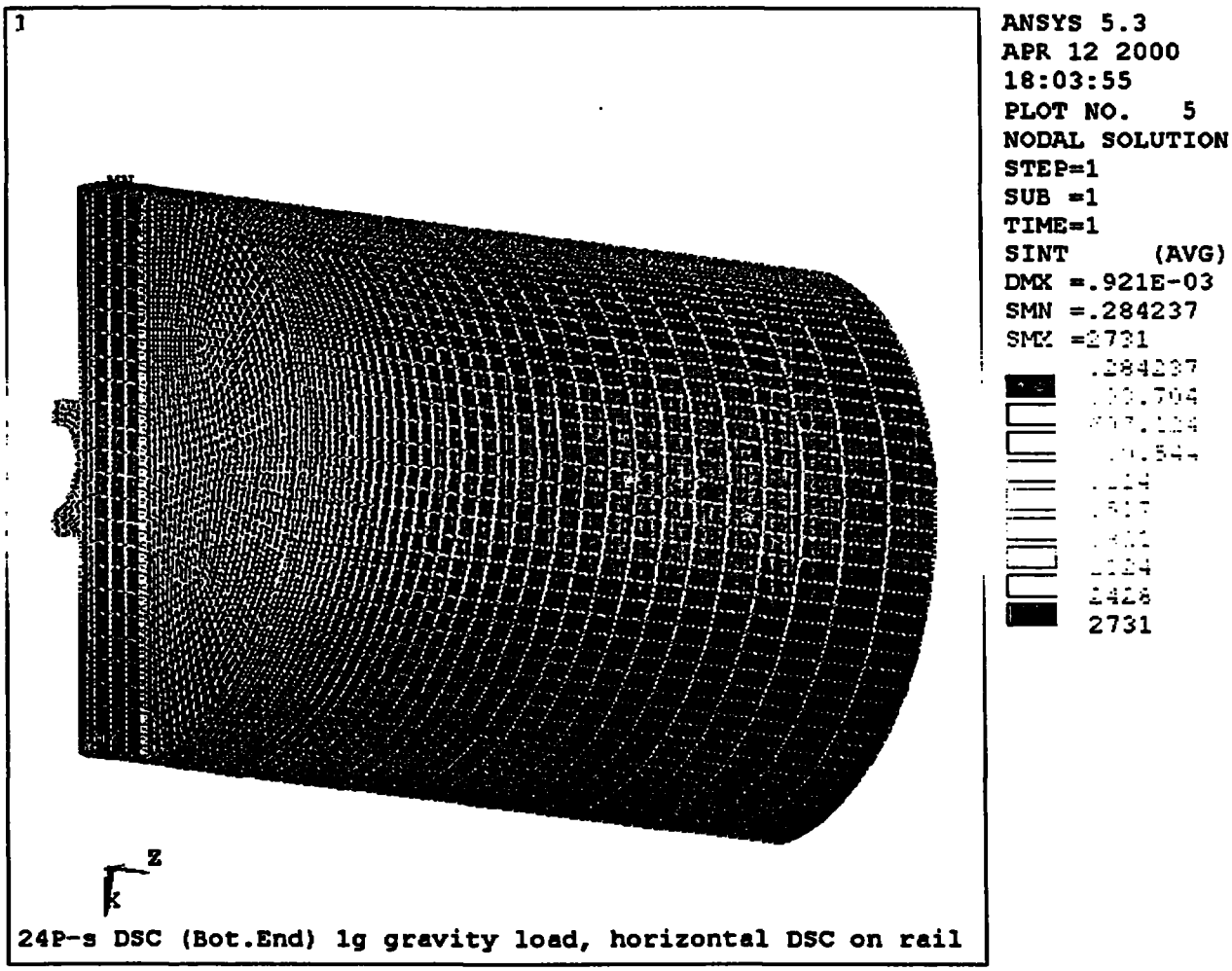

Figure B18-2

24P-FO DSC Shell Assembly, Bottom End Components

Stress Intensity Contour

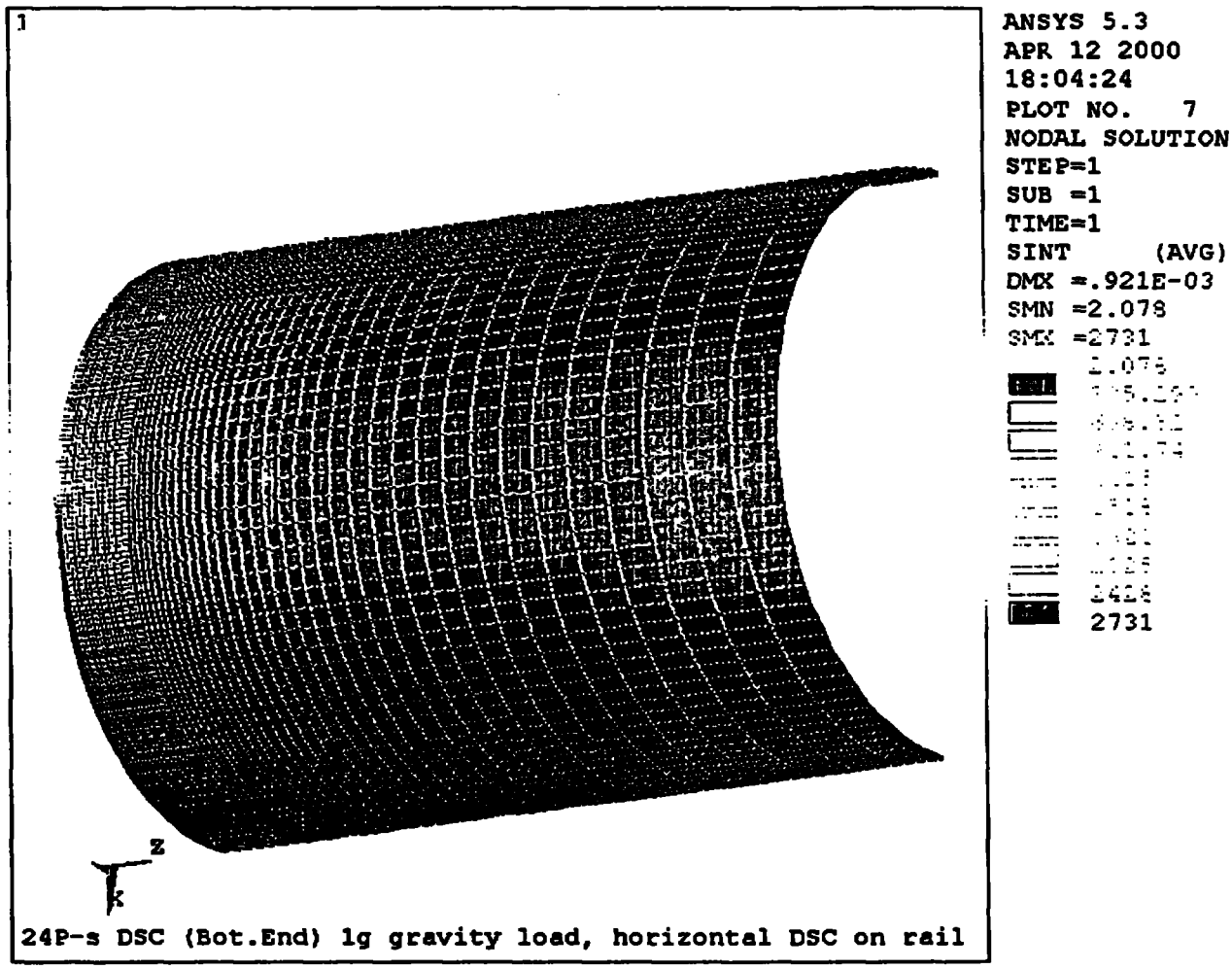

Figure B18-3

24P-FO DSC Shell Assembly, Cylindrical Shell (Bottom Half)

Stress Intensity Contour

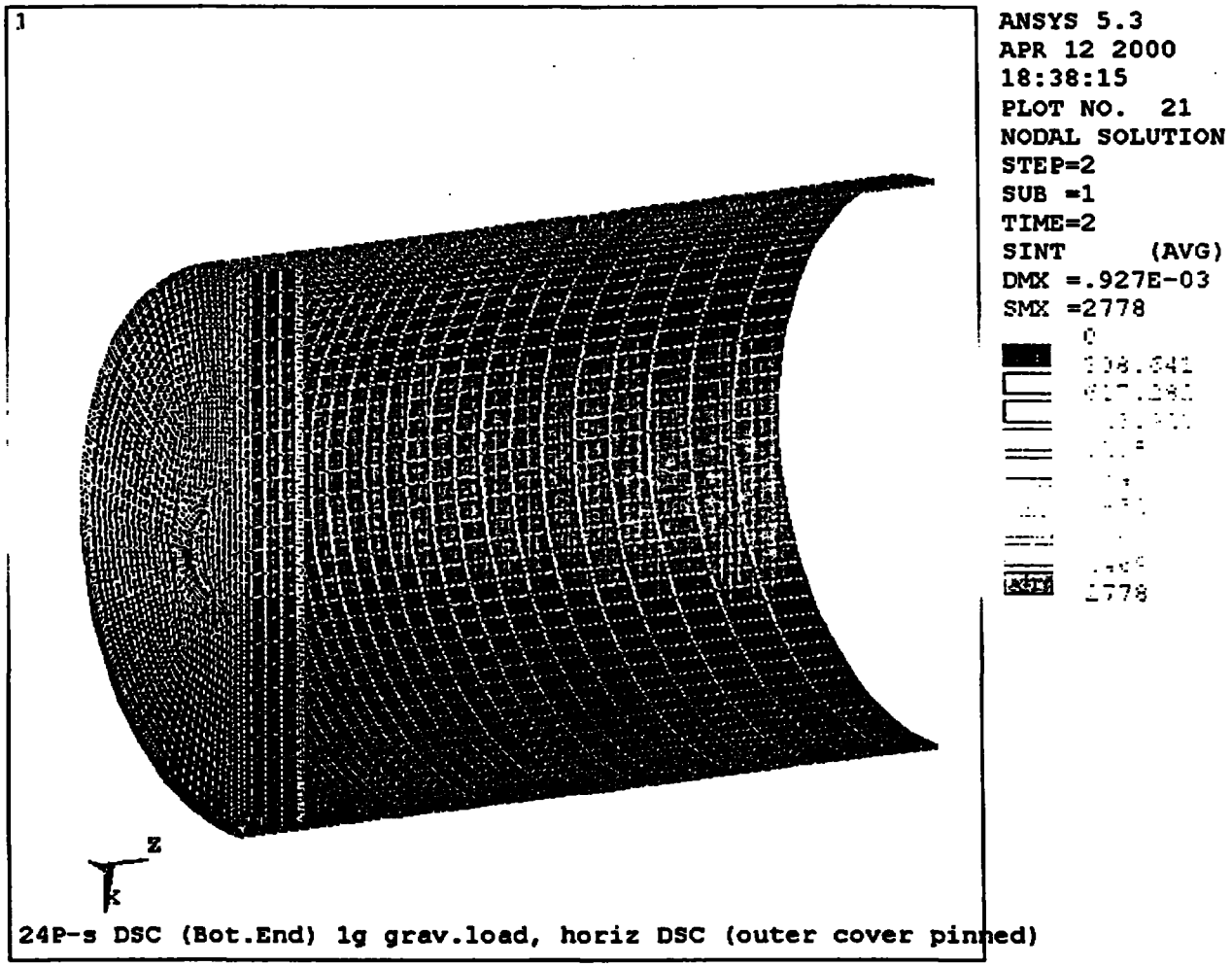

Figure B18-4

24P-FO DSC Shell Assembly, Bottom End Components

Stress Intensity Contour

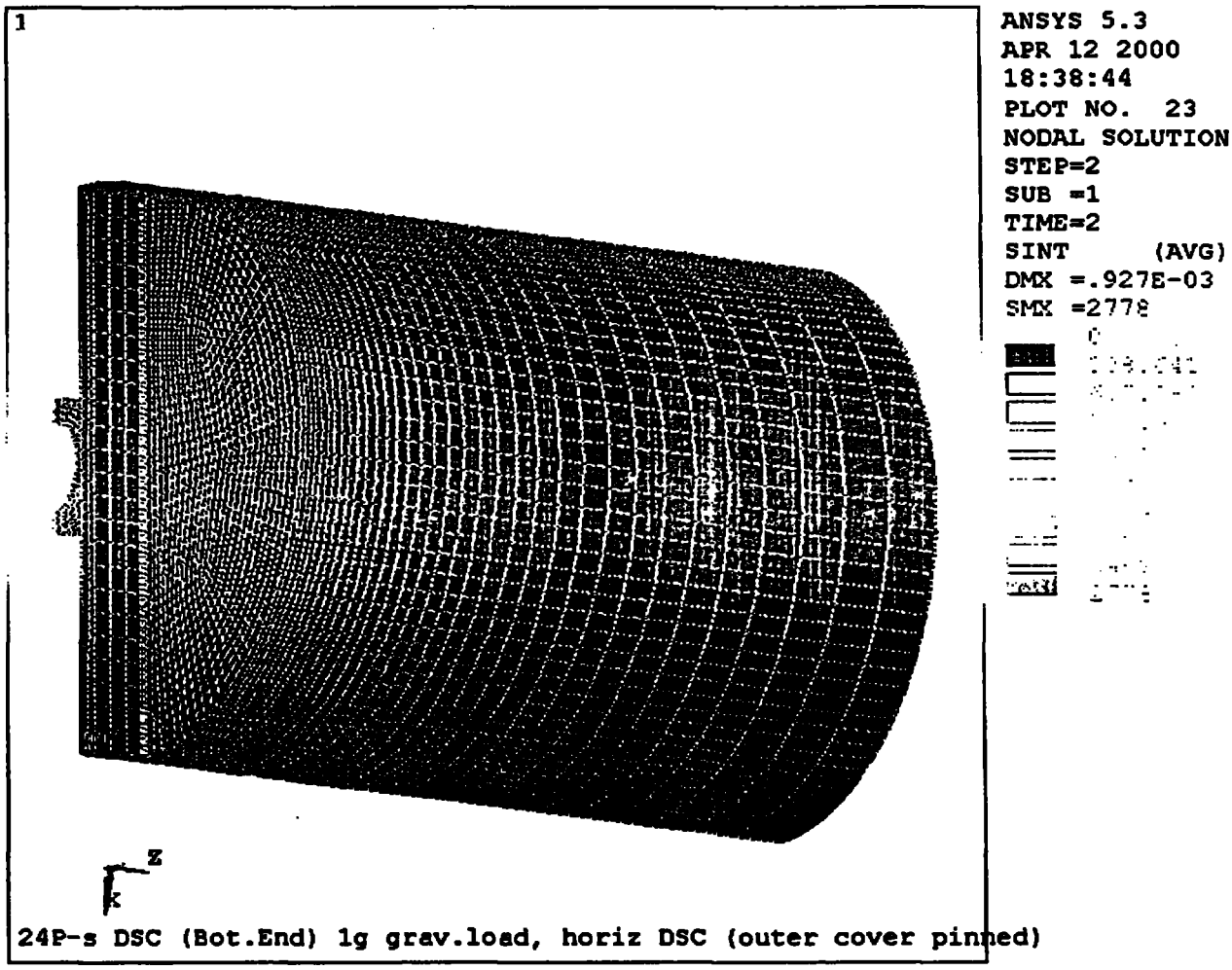

Figure B18-5

24P-FO DSC Shell Assembly, Bottom End Components

Stress Intensity Contour

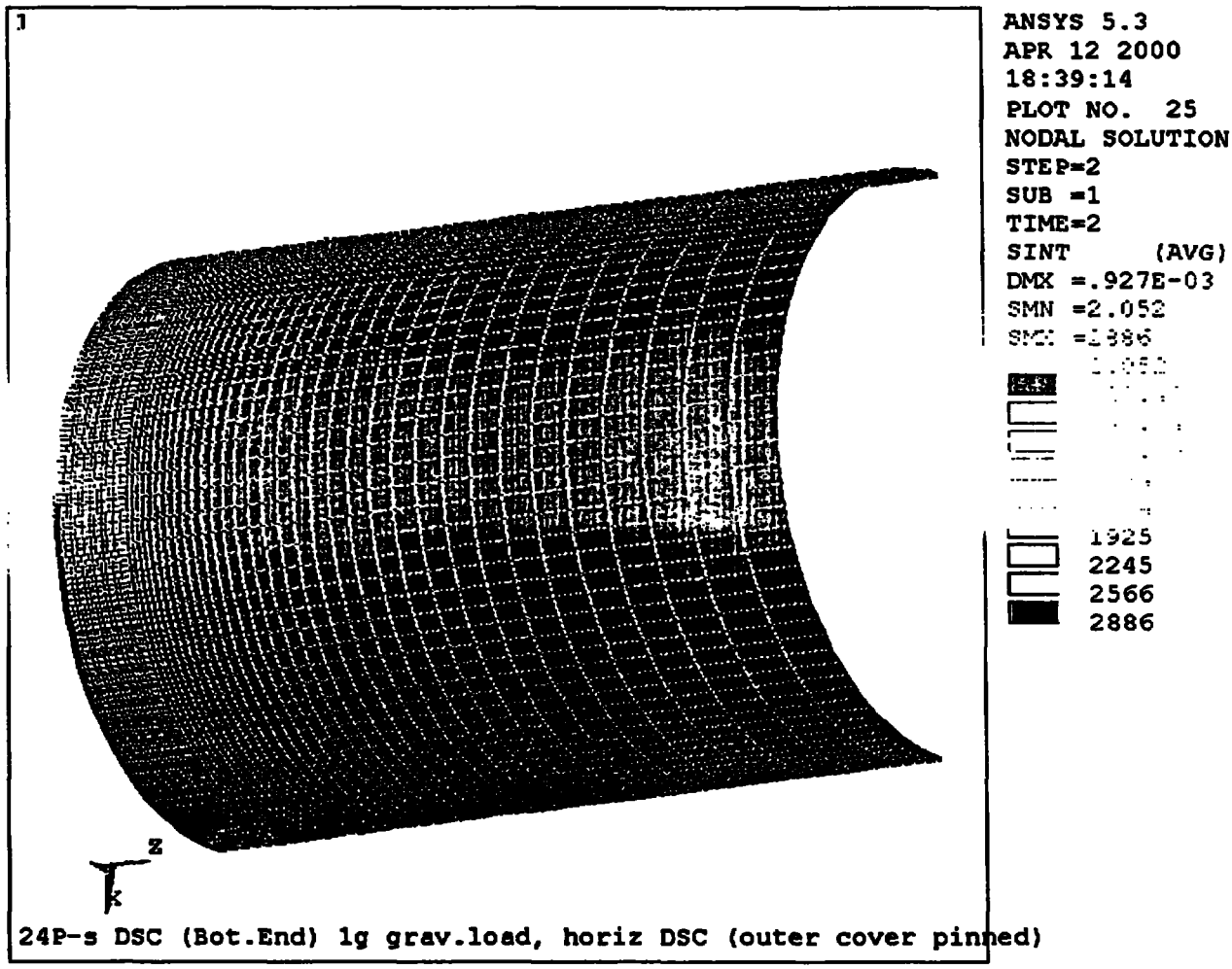

Figure B18-6

24P-FO DSC Shell Assembly, Cylindrical Shell (Bottom Half)

Stress Intensity Contour

Appendix B19

ANSYS Stress Intensity Contour Plots for Run PB24THRM

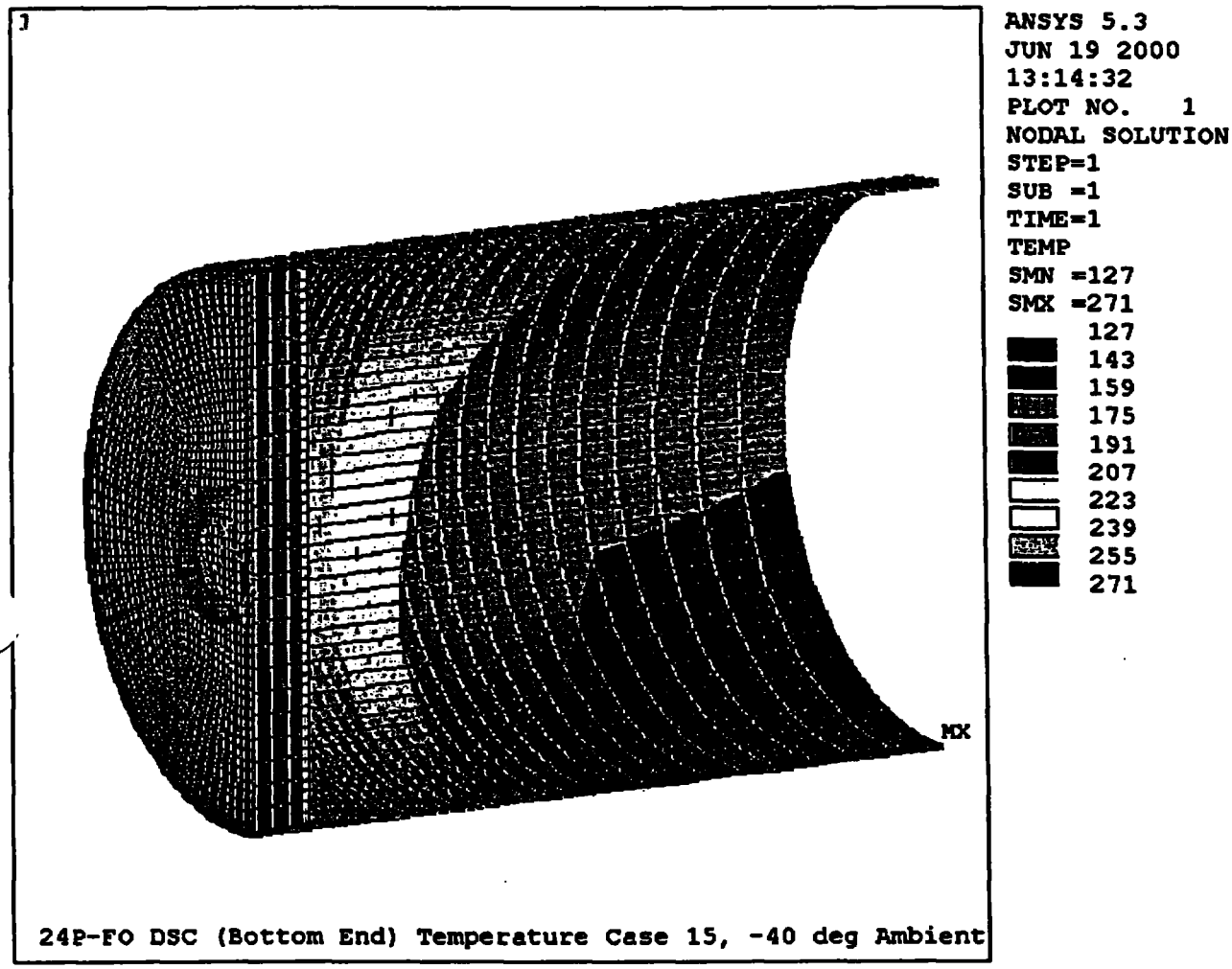

Figure B19-1

24P-FO DSC Shell Assembly, Bottom End Components

Thermal Contour

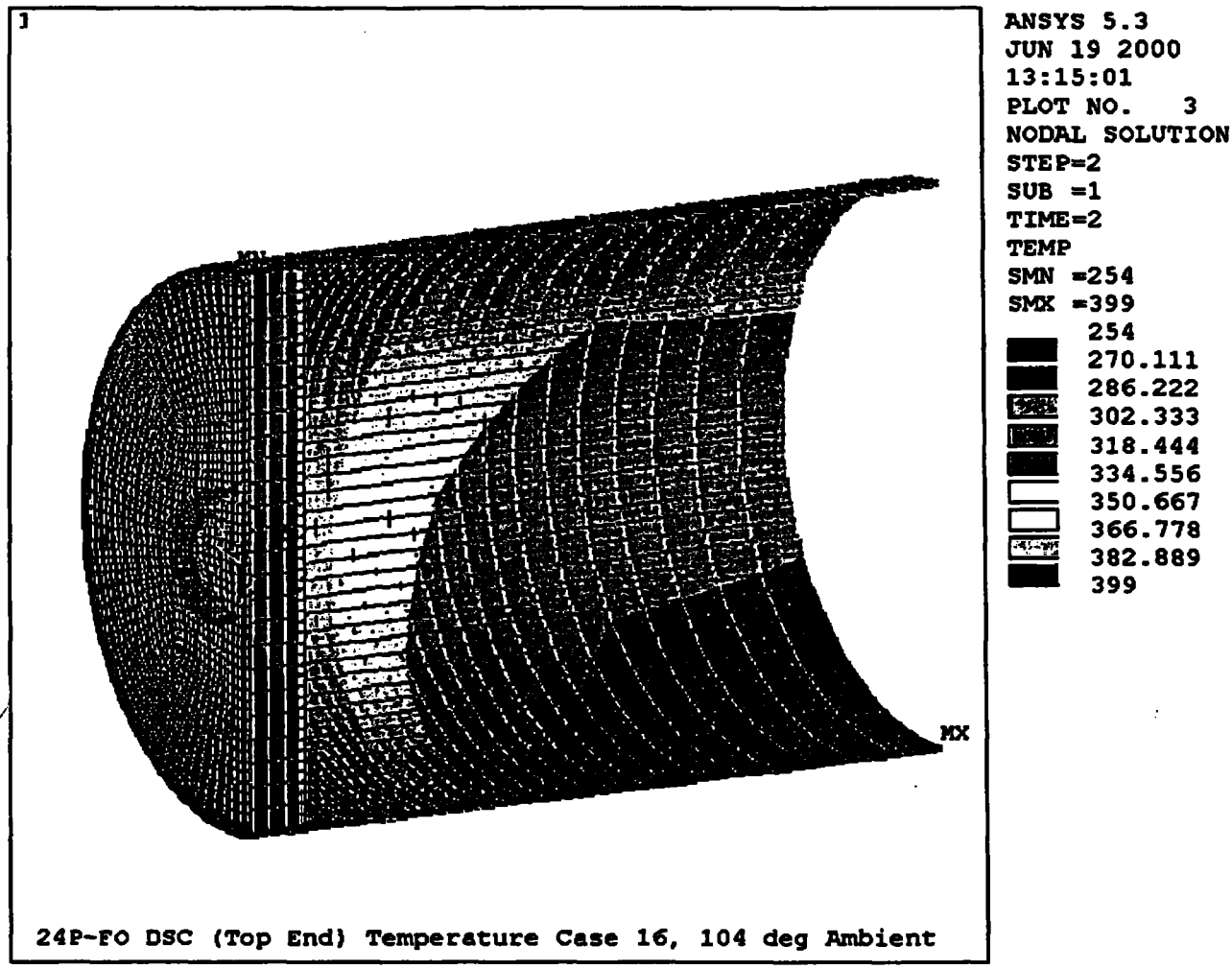

Figure B19-3

24P-FO DSC Shell Assembly, Bottom End Components

Thermal Contour

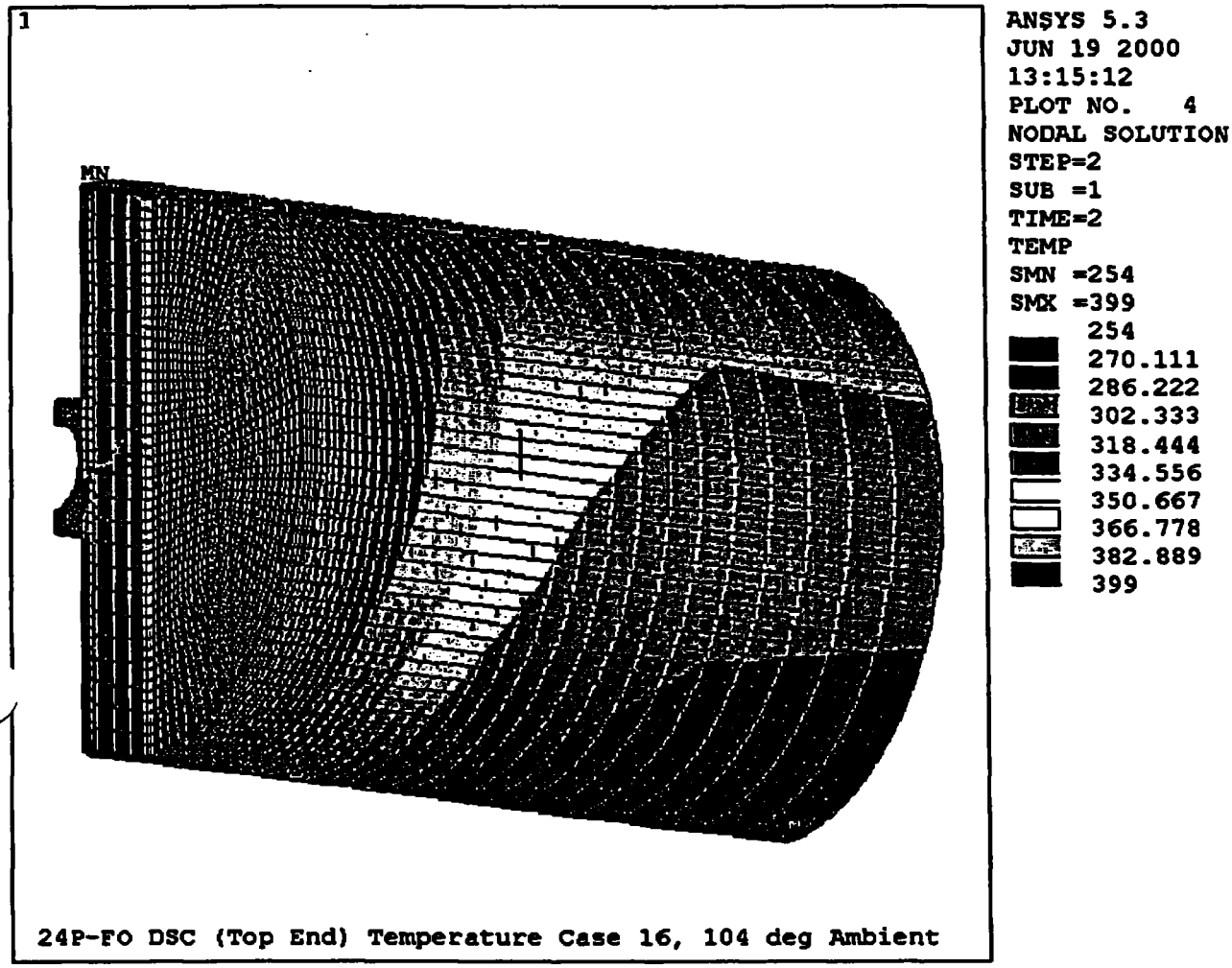

Figure B19-4

24P-FO DSC Shell Assembly, Bottom End Components

Thermal Contour

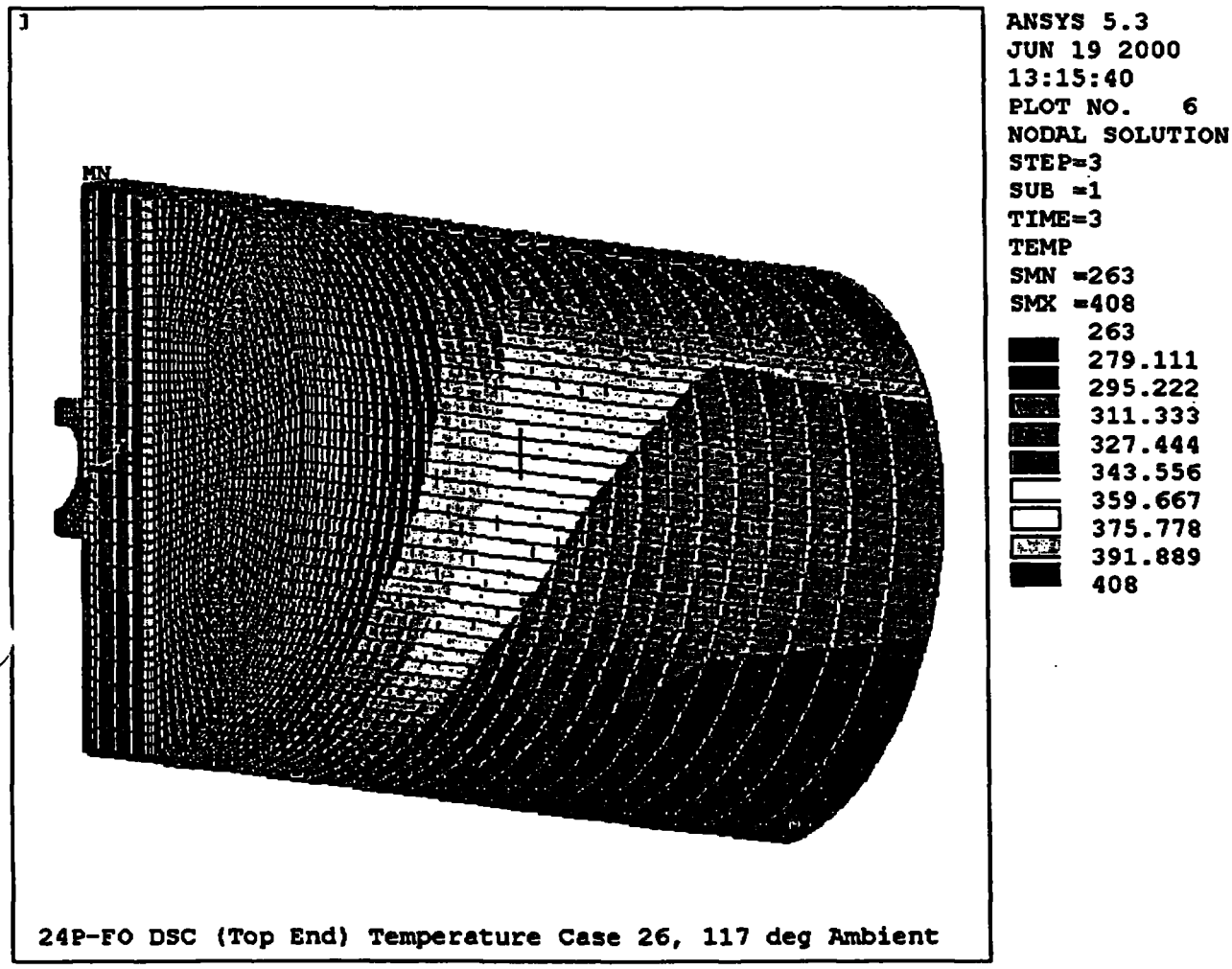

Figure B19-5

24P-FO DSC Shell Assembly, Bottom End Components

Thermal Contour

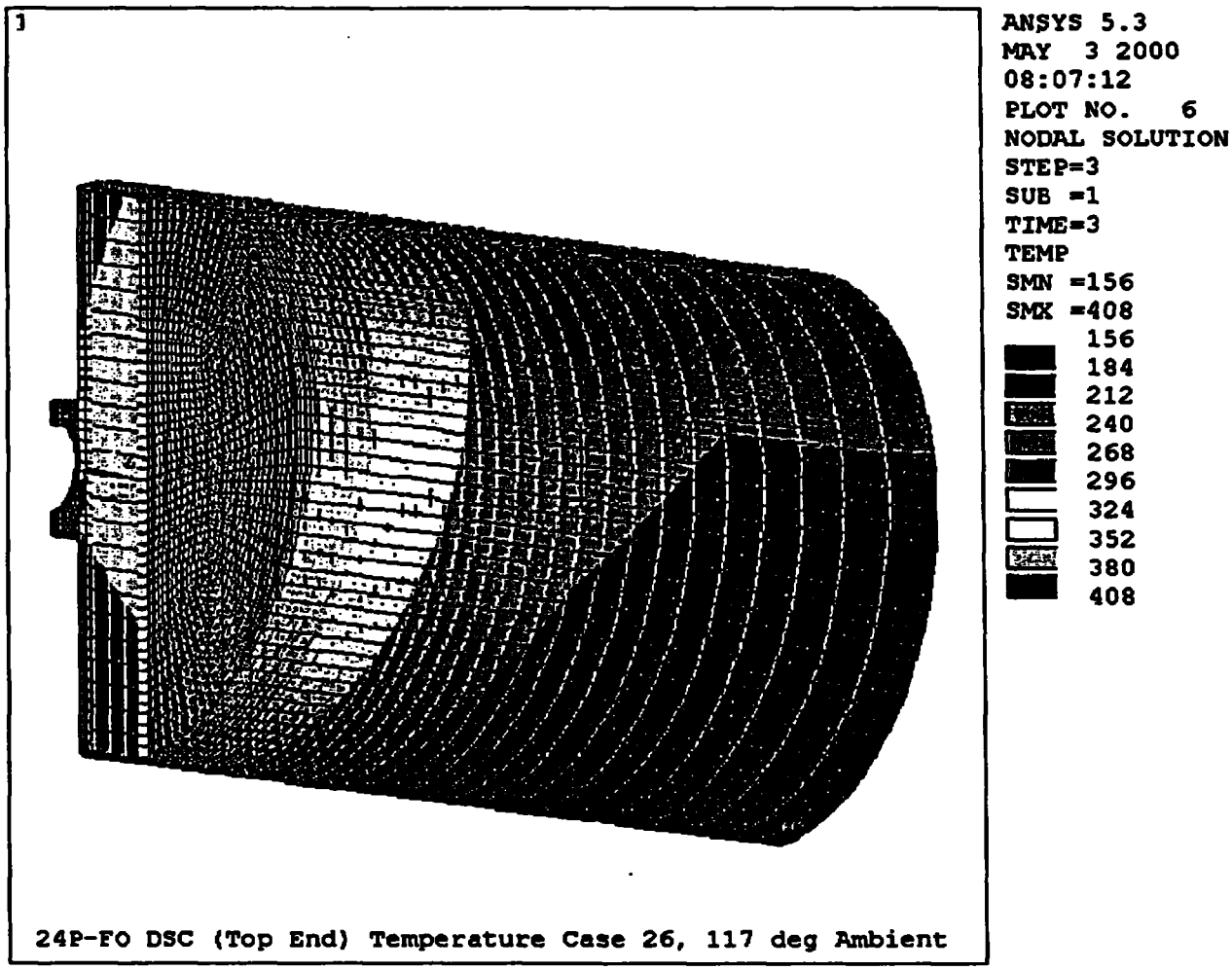

Figure B19-6

24P-FO DSC Shell Assembly, Bottom End Components

Thermal Contour

Appendix B20

ANSYS Stress Intensity Contour Plots for Run PB24PSD2

Note:

The stress plots shown in Figures B20-3, B20-4, B20-6, B20-9, B20-10, and B20-12 exclude elements adjacent to the rail support (bottom centerline).

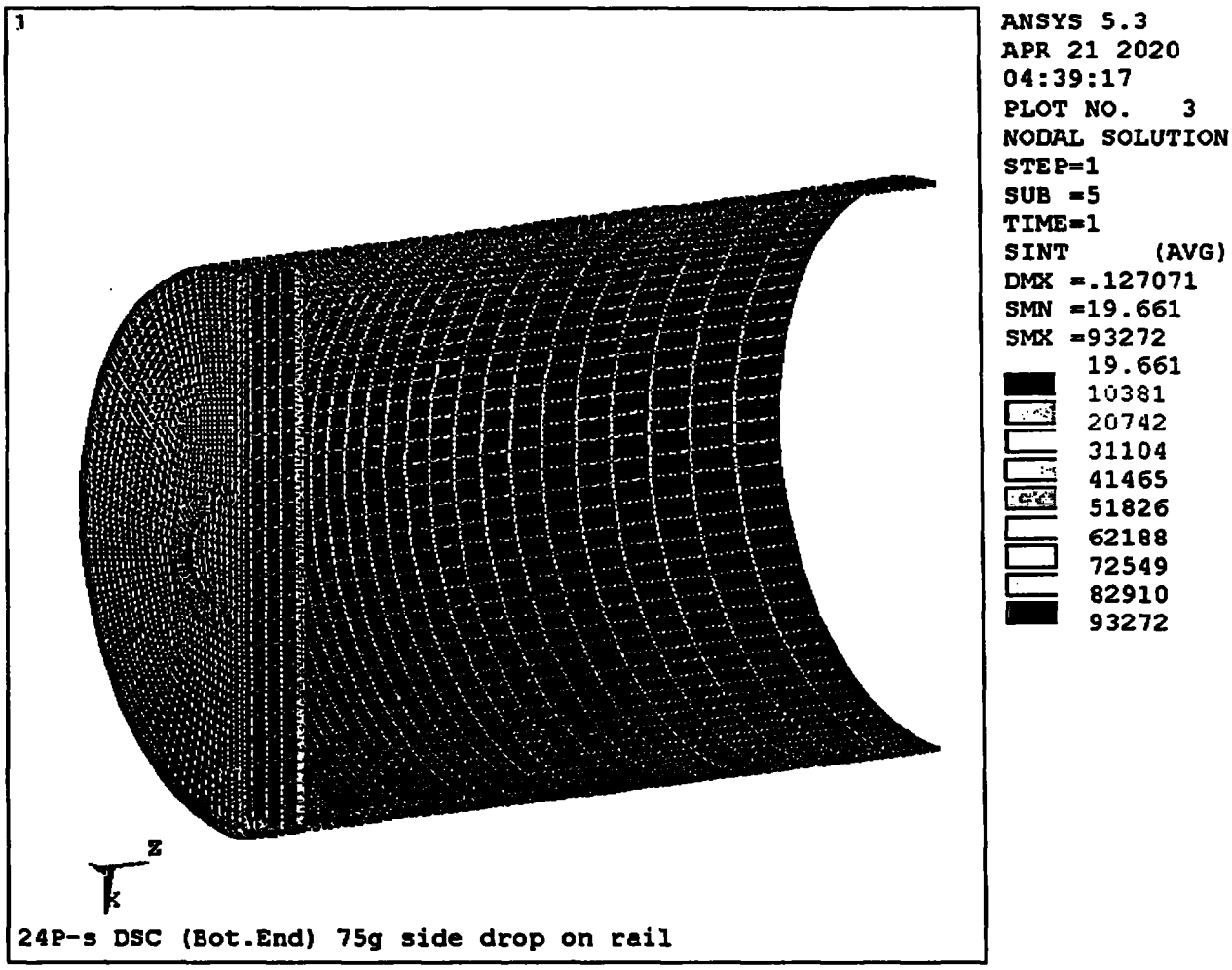

Figure B20-1

24P-FO DSC Shell Assembly, Bottom End Components

Stress Intensity Contour

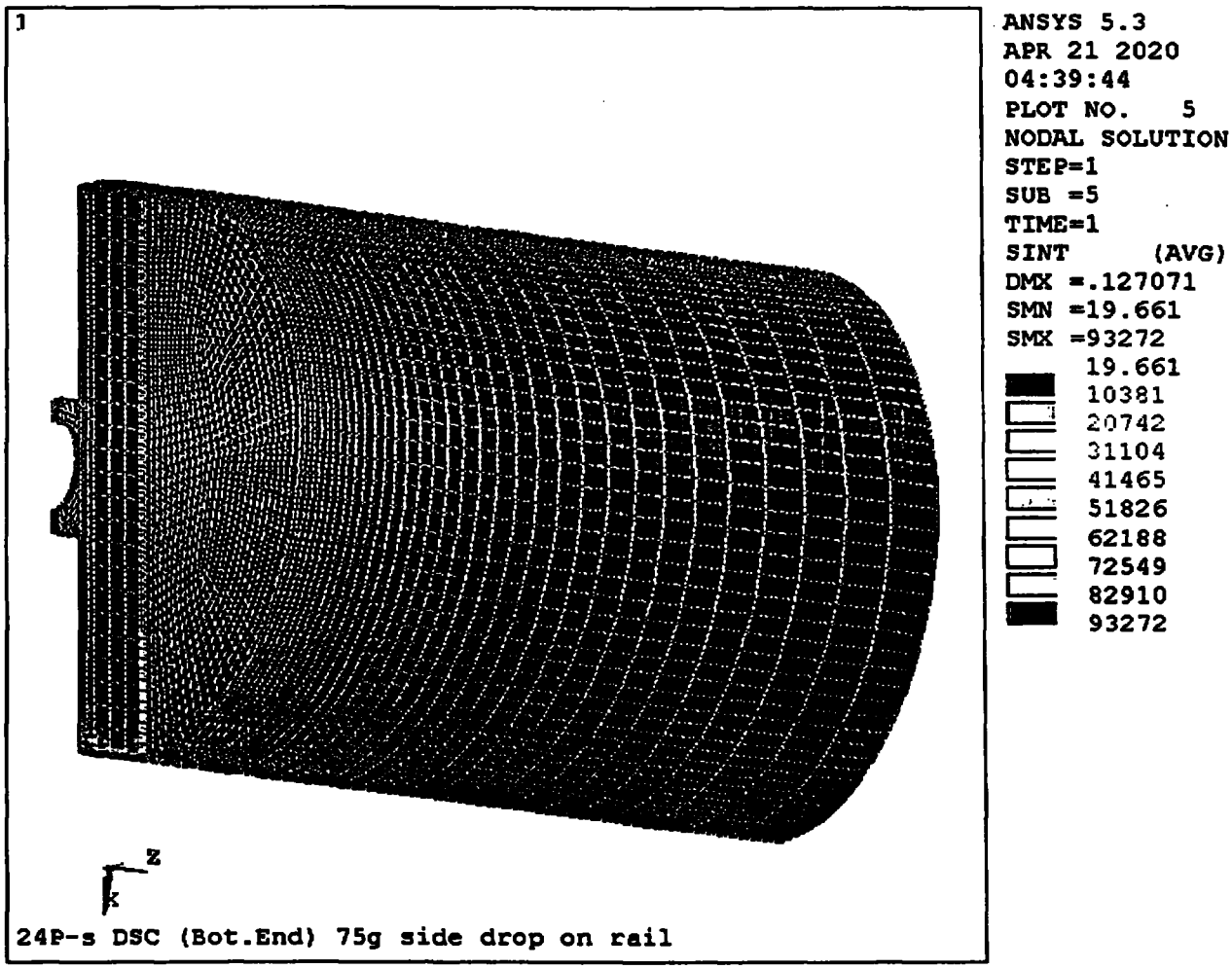

Figure B20-2

24P-FO DSC Shell Assembly, Bottom End Components

Stress Intensity Contour

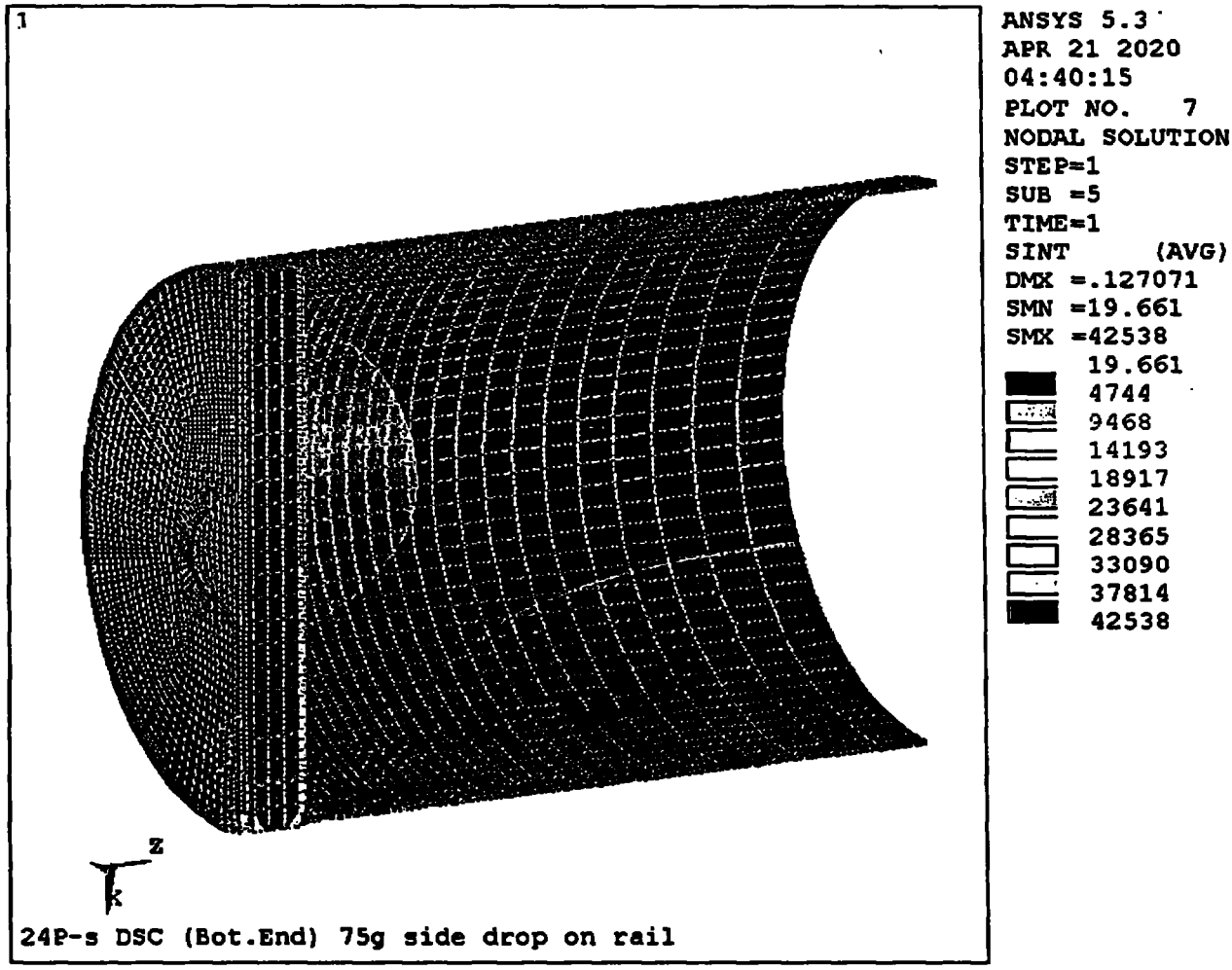

Figure B20-3

24P-FO DSC Shell Assembly, Bottom End Components

Stress Intensity Contour

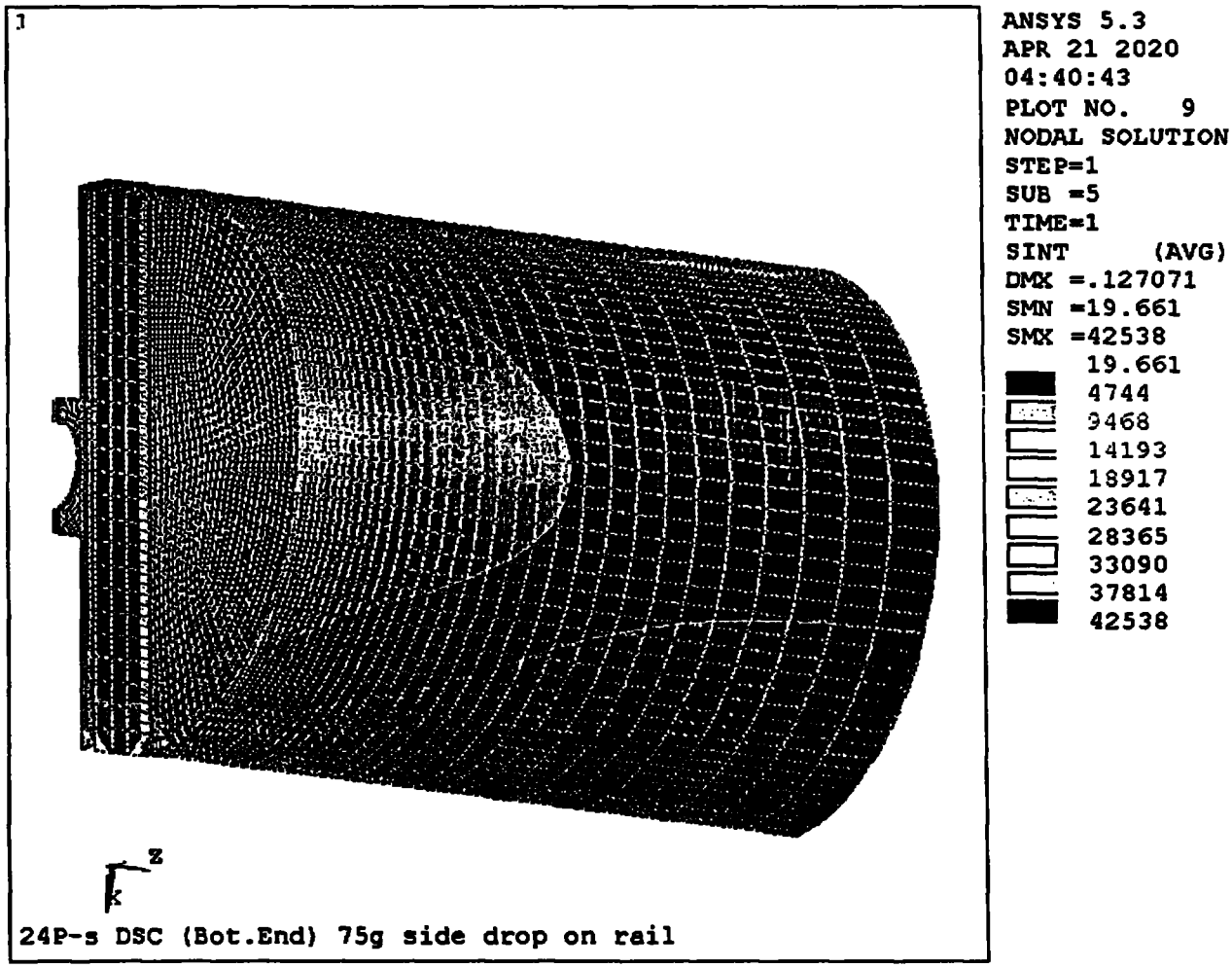

Figure B20-4

24P-FO DSC Shell Assembly, Bottom End Components

Stress Intensity Contour

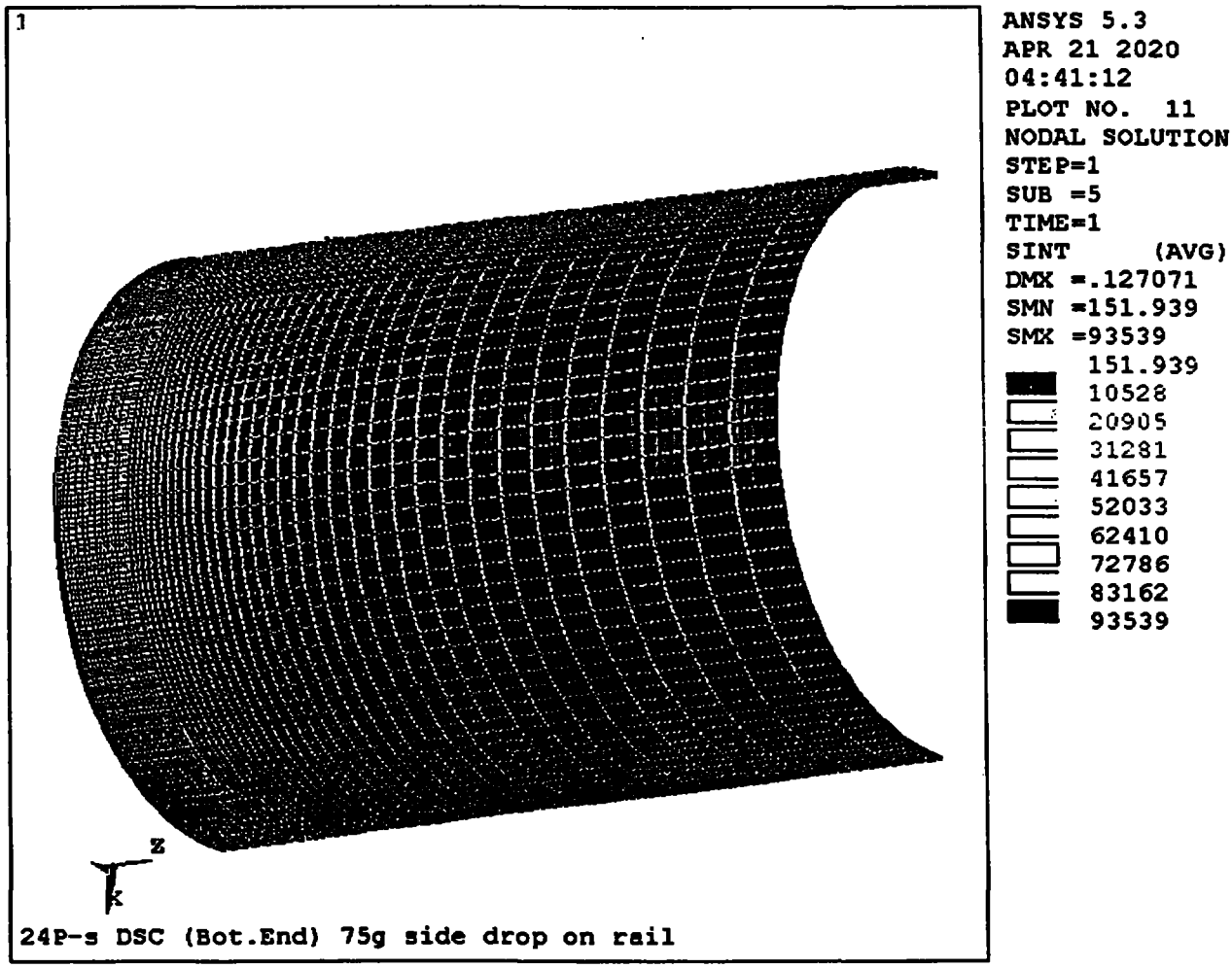

Figure B20-5

24P-FO DSC Shell Assembly, Cylindrical Shell (Bottom Half)

Stress Intensity Contour

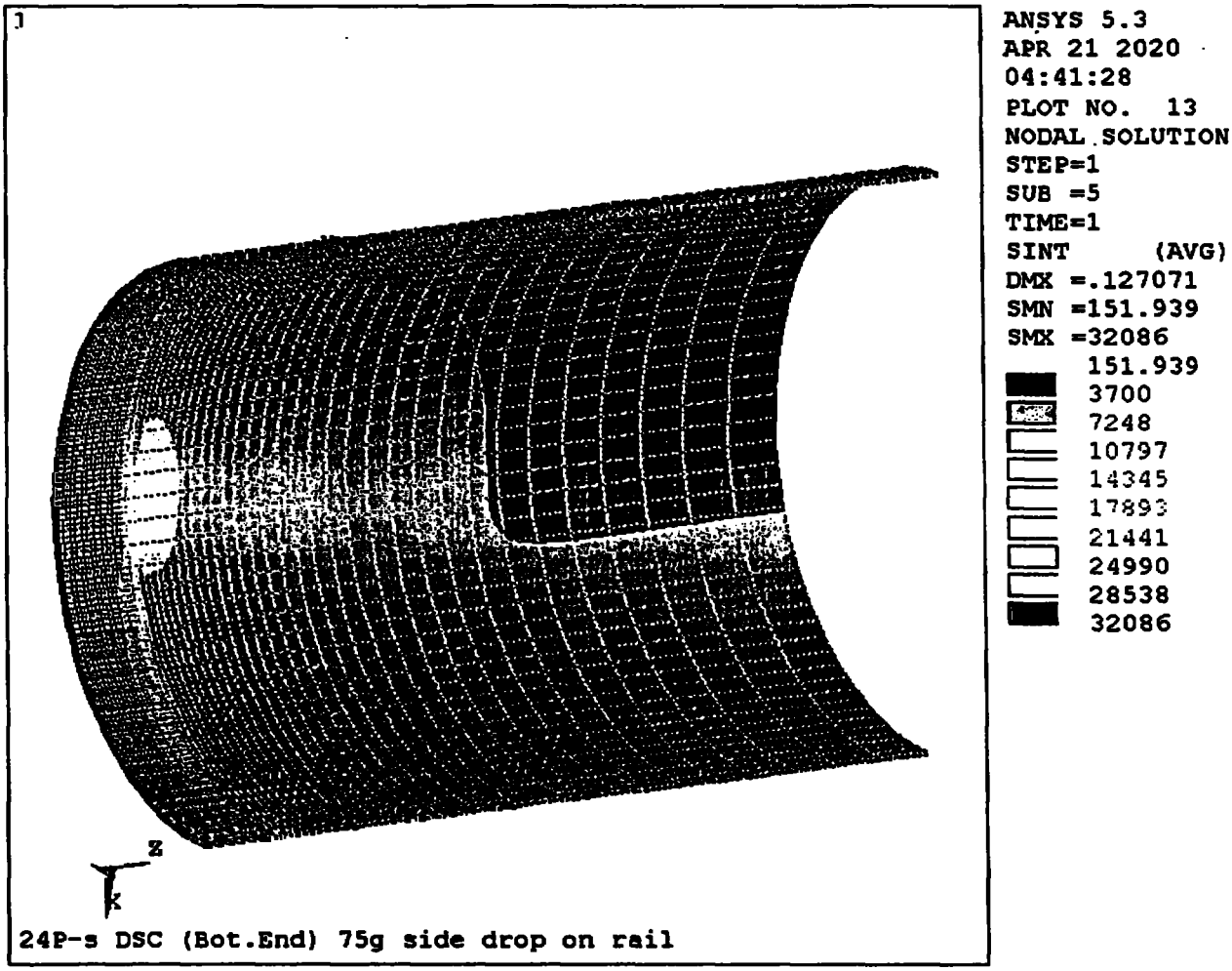

Figure B20-6

24P-FO DSC Shell Assembly, Cylindrical Shell (Bottom Half)

Stress Intensity Contour

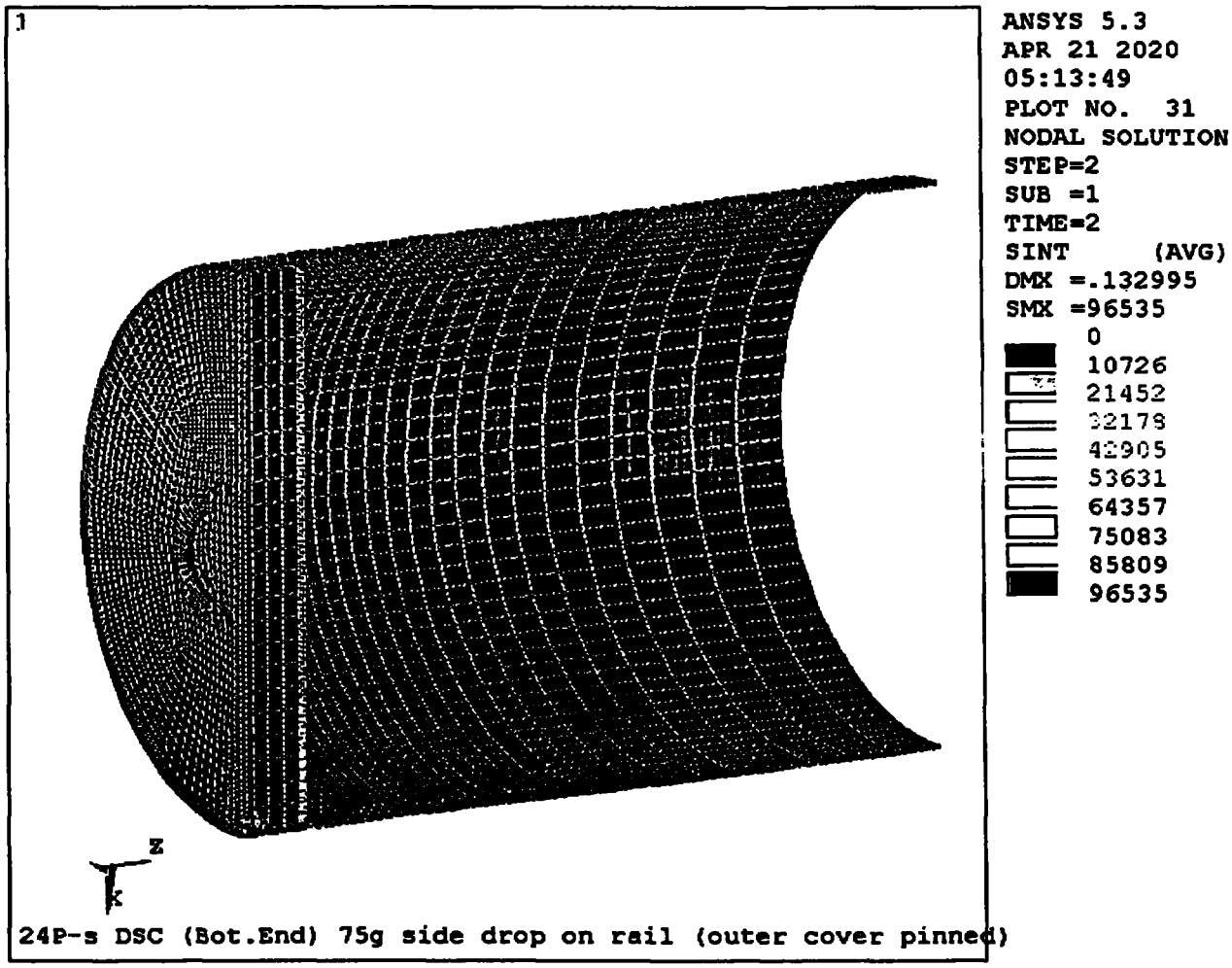

Figure B20-7

24P-FO DSC Shell Assembly, Bottom End Components

Stress Intensity Contour

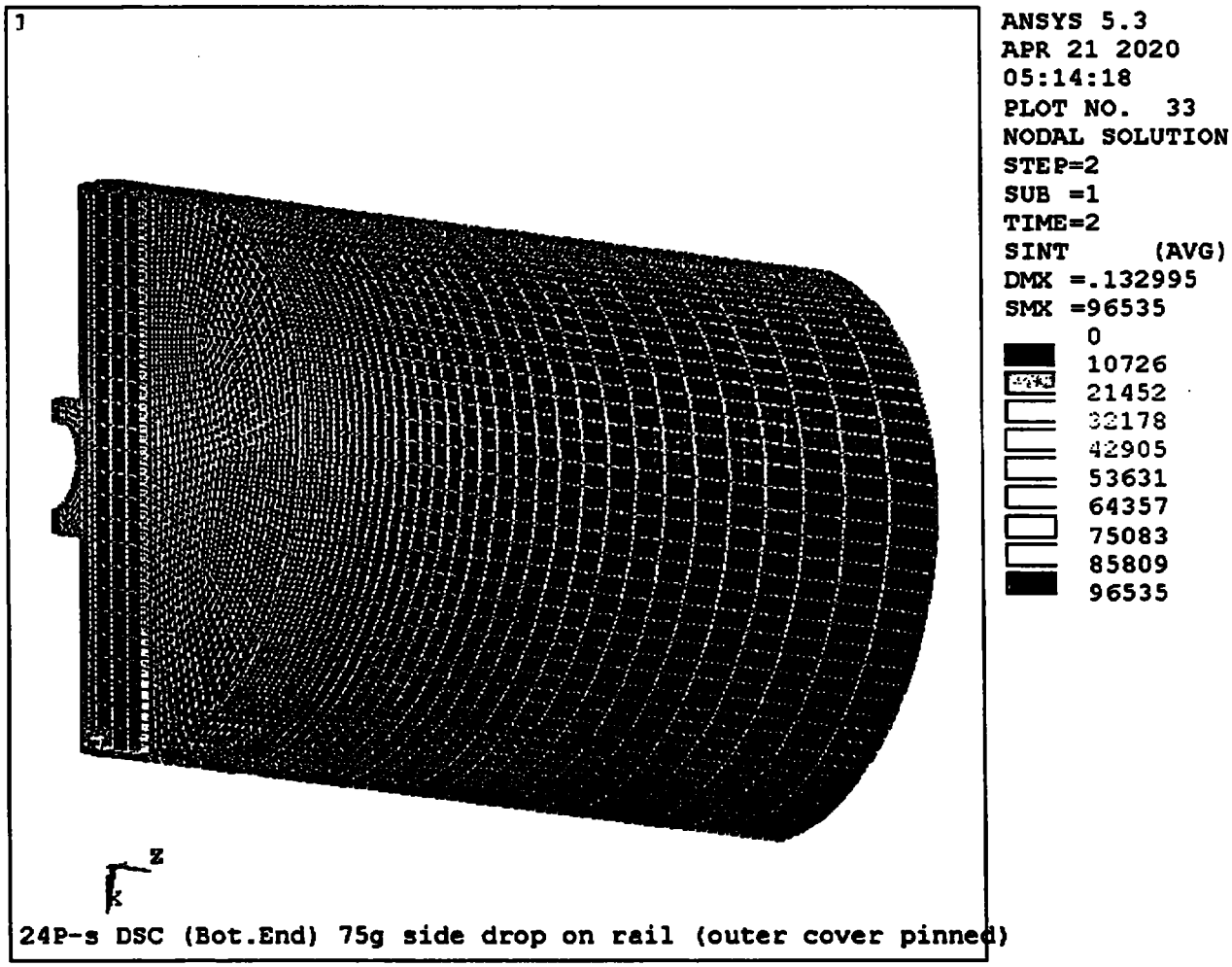

Figure B20-8

24P-FO DSC Shell Assembly, Bottom End Components

Stress Intensity Contour

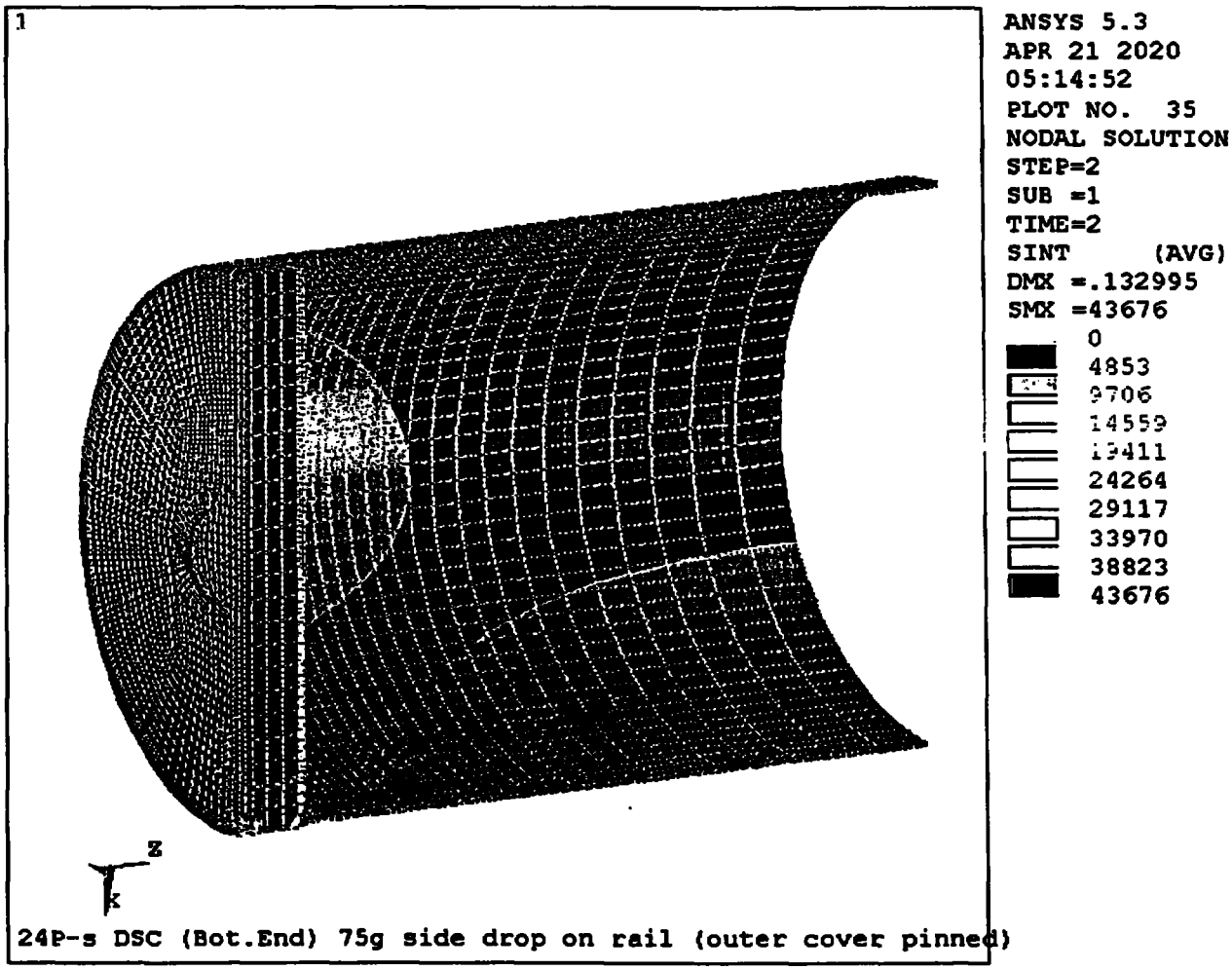

Figure B20-9

24P-FO DSC Shell Assembly, Bottom End Components

Stress Intensity Contour

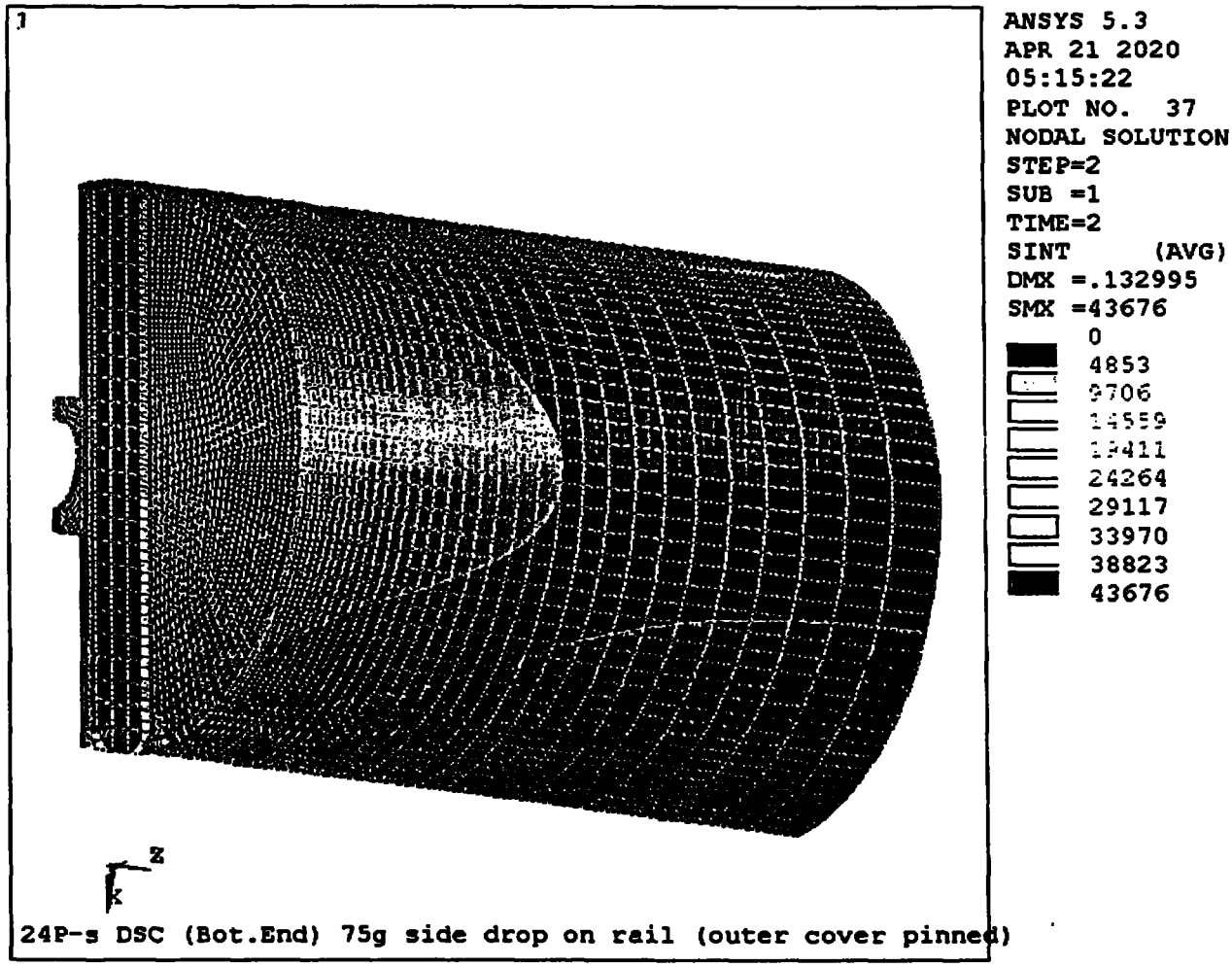

Figure B20-10

24P-FO DSC Shell Assembly, Bottom End Components

Stress Intensity Contour

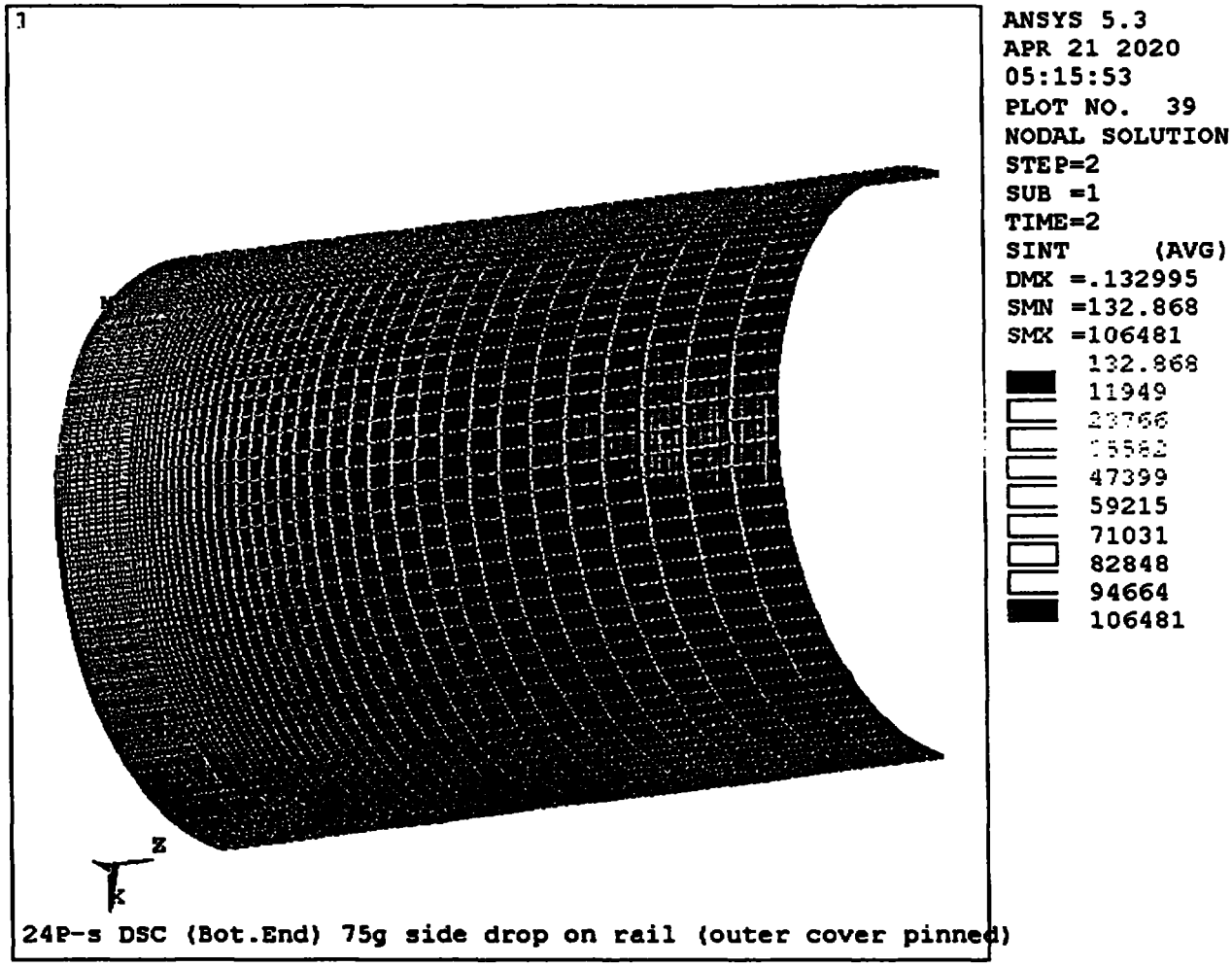

Figure B20-11

24P-FO DSC Shell Assembly, Cylindrical Shell (Bottom Half)

Stress Intensity Contour

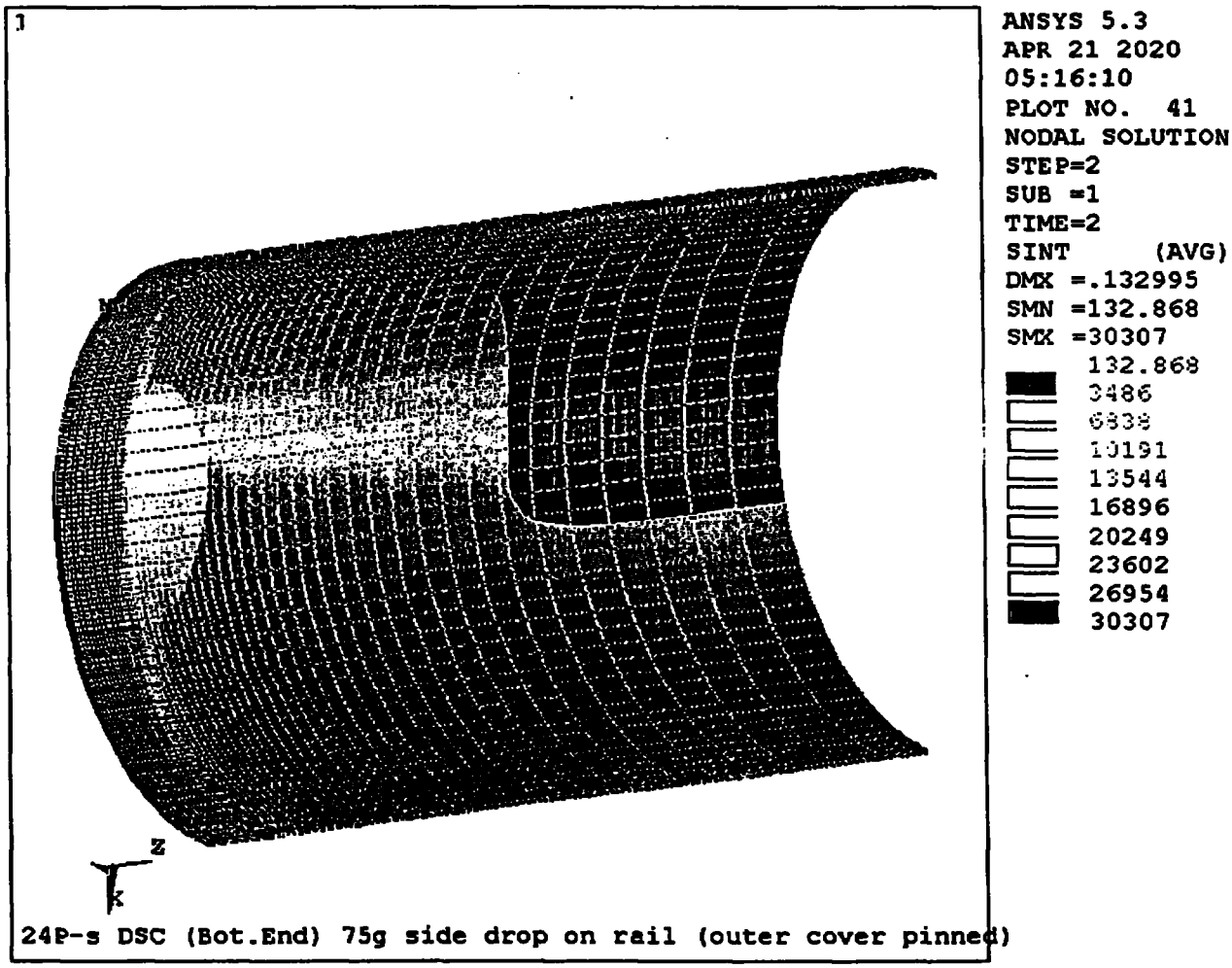

Figure B20-12

24P-FO DSC Shell Assembly, Cylindrical Shell (Bottom Half)

Stress Intensity Contour

Appendix B21

ANSYS Stress Intensity Contour Plots for Run PB24PSD3

Note:

The stress plots shown in Figures B21-3, B21-4, B21-6, B21-9, B21-10, and B24-12 exclude elements adjacent to the rail support (bottom centerline).

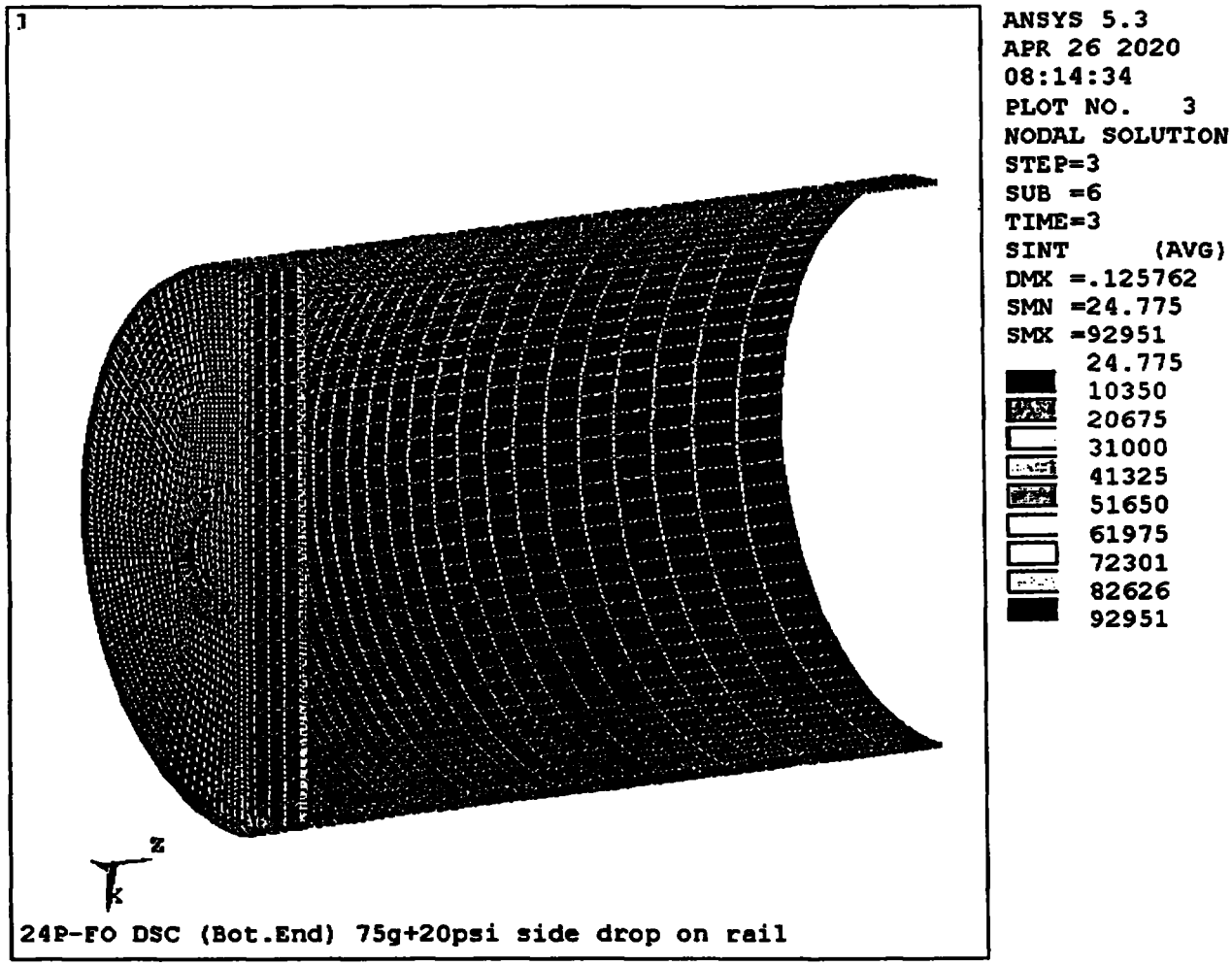

Figure B21-1

24P-FO DSC Shell Assembly, Bottom End Components

Stress Intensity Contour

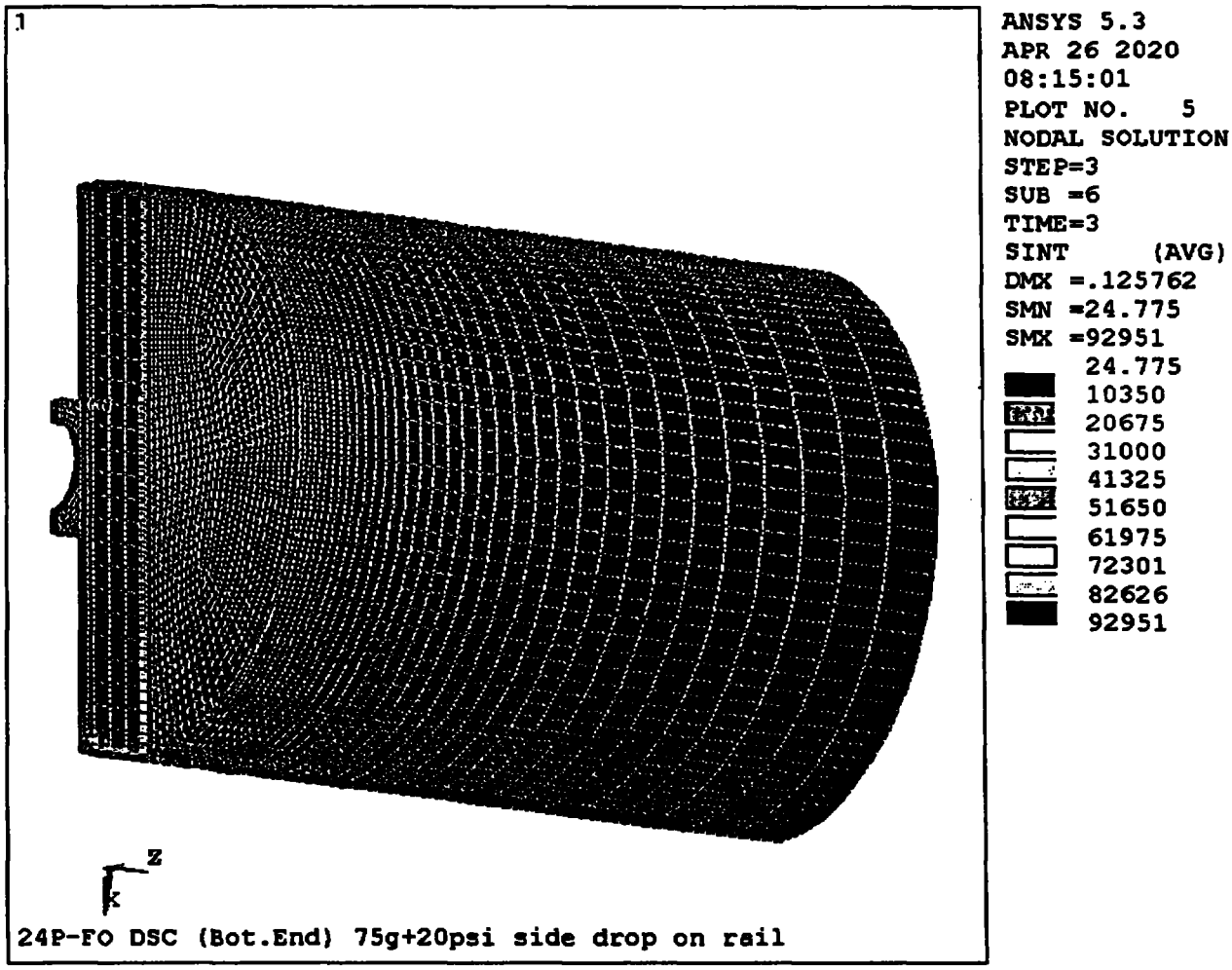

Figure B21-2

24P-FO DSC Shell Assembly, Bottom End Components

Stress Intensity Contour

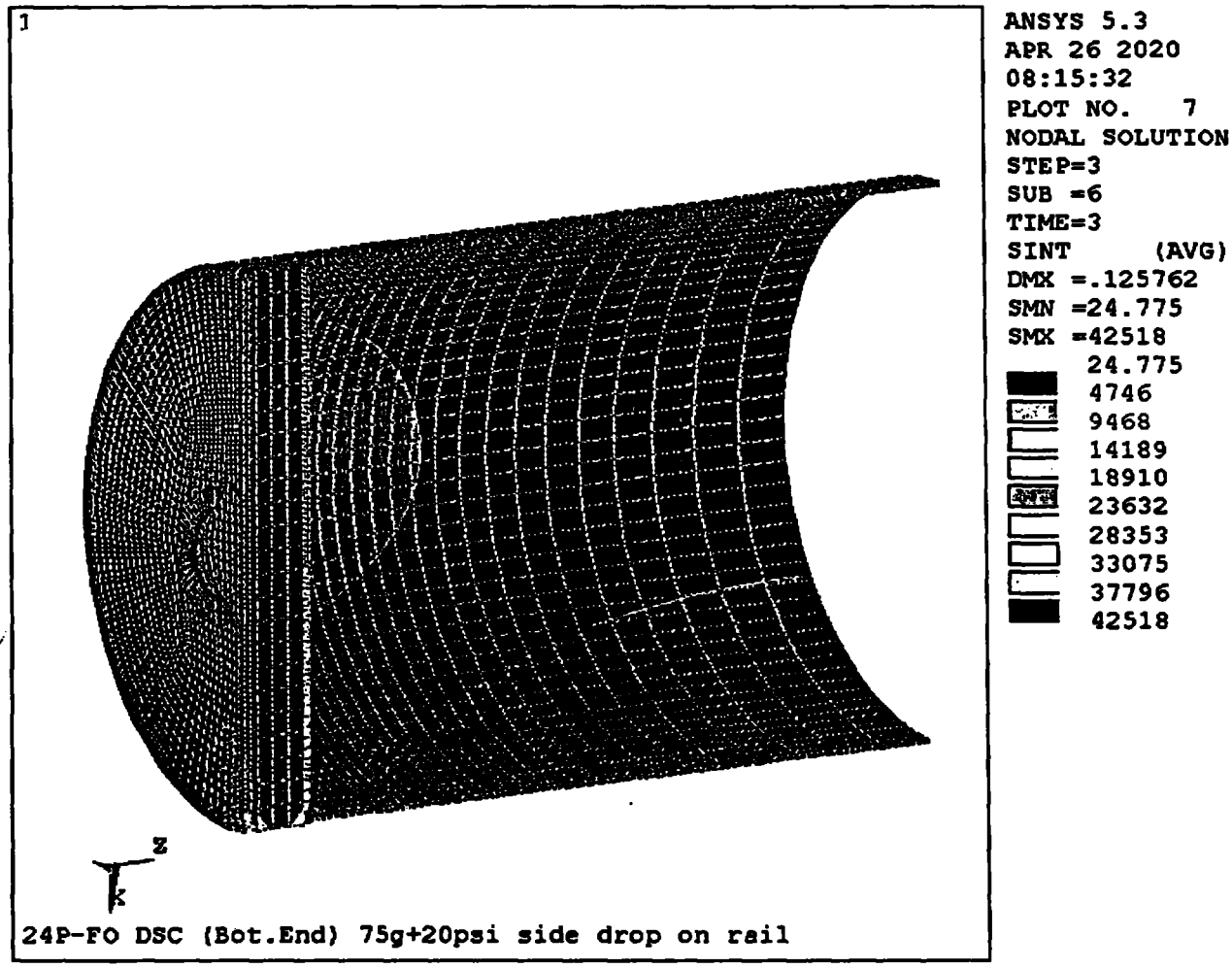

Figure B21-3

24P-FO DSC Shell Assembly, Bottom End Components

Stress Intensity Contour

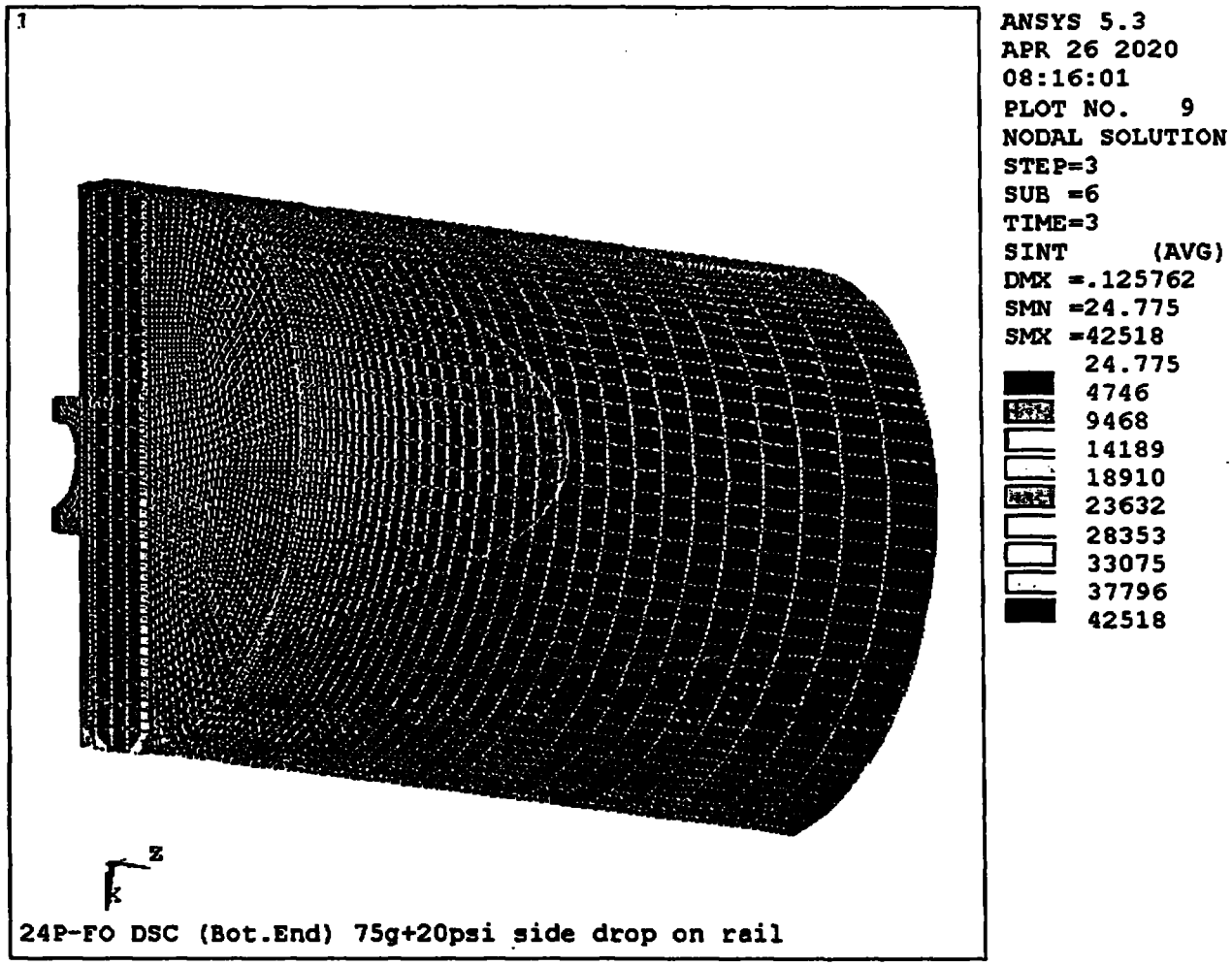

Figure B21-4

24P-FO DSC Shell Assembly, Bottom End Components

Stress Intensity Contour

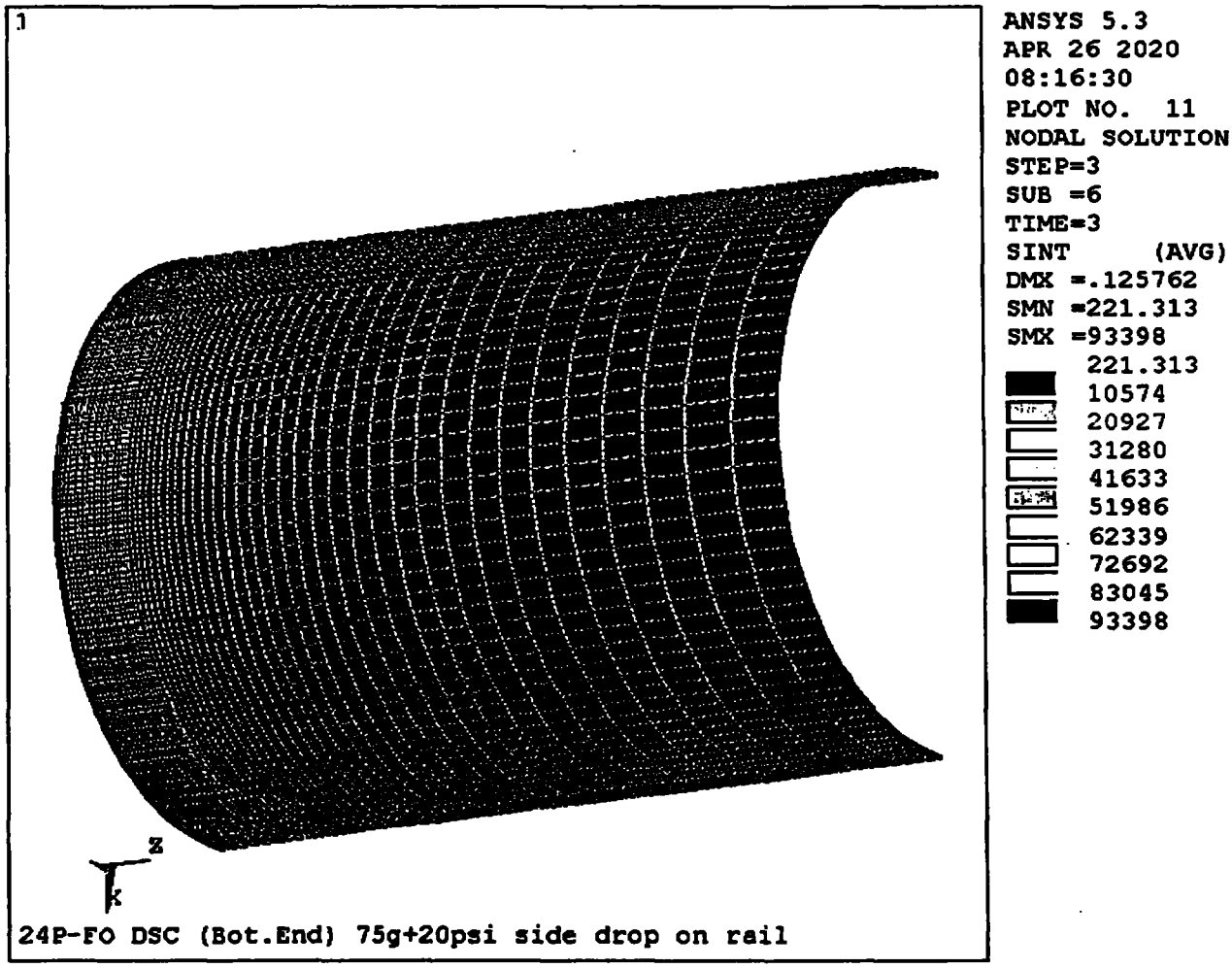

Figure B21-5

24P-FO DSC Shell Assembly, Cylindrical Shell (Bottom Half)

Stress Intensity Contour

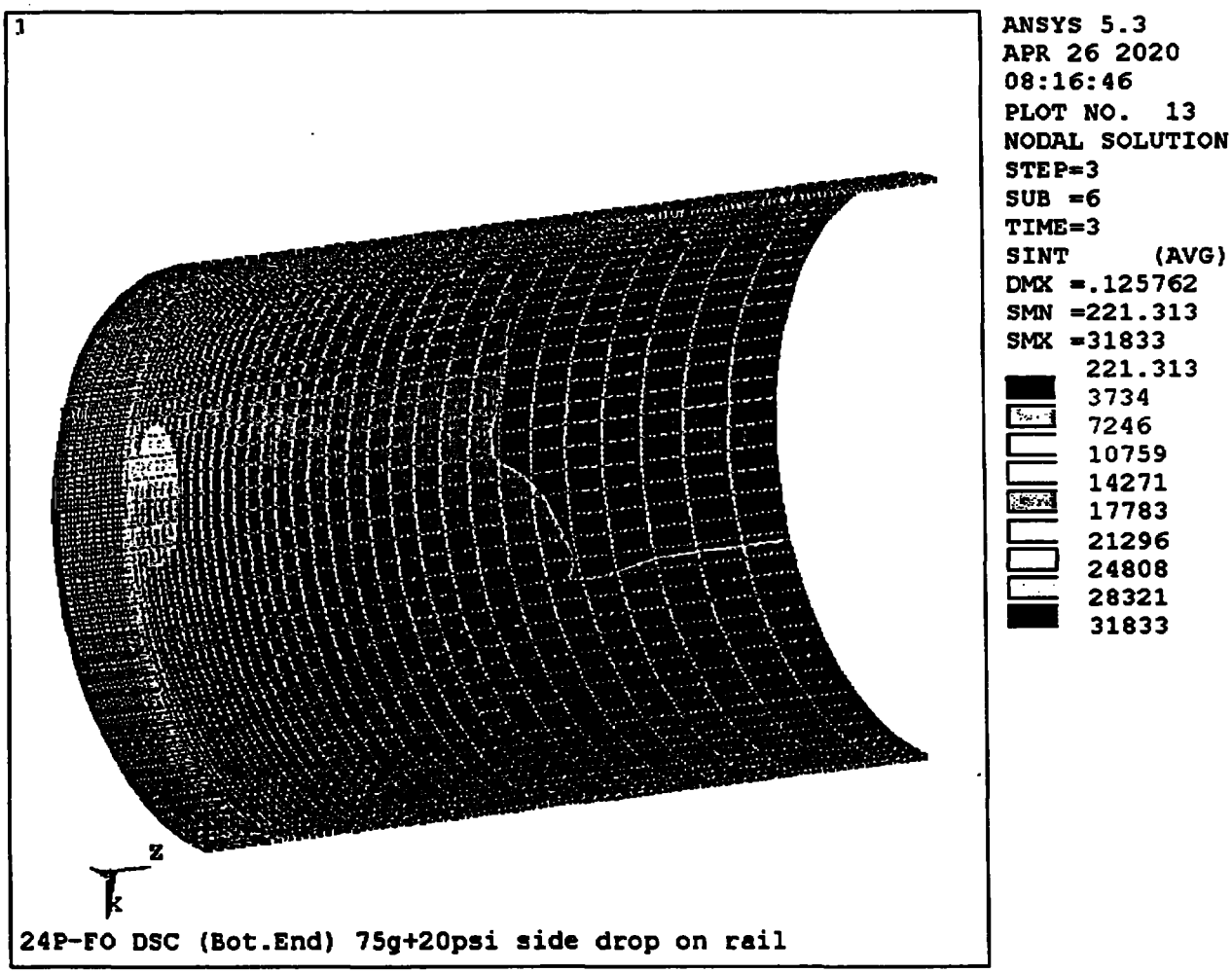

Figure B21-6

24P-FO DSC Shell Assembly, Cylindrical Shell (Bottom Half)

Stress Intensity Contour

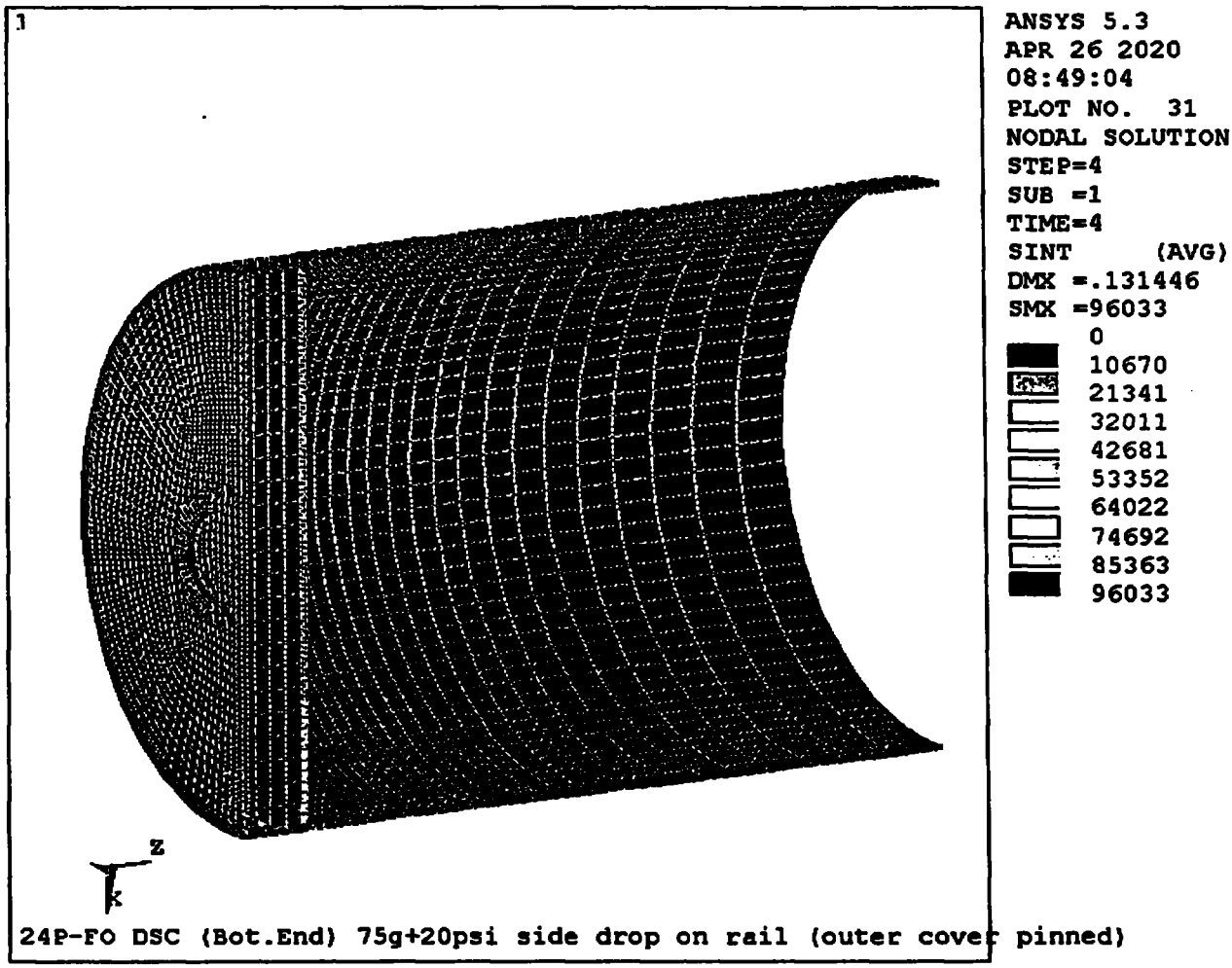

Figure B21-7

24P-FO DSC Shell Assembly, Bottom End Components

Stress Intensity Contour

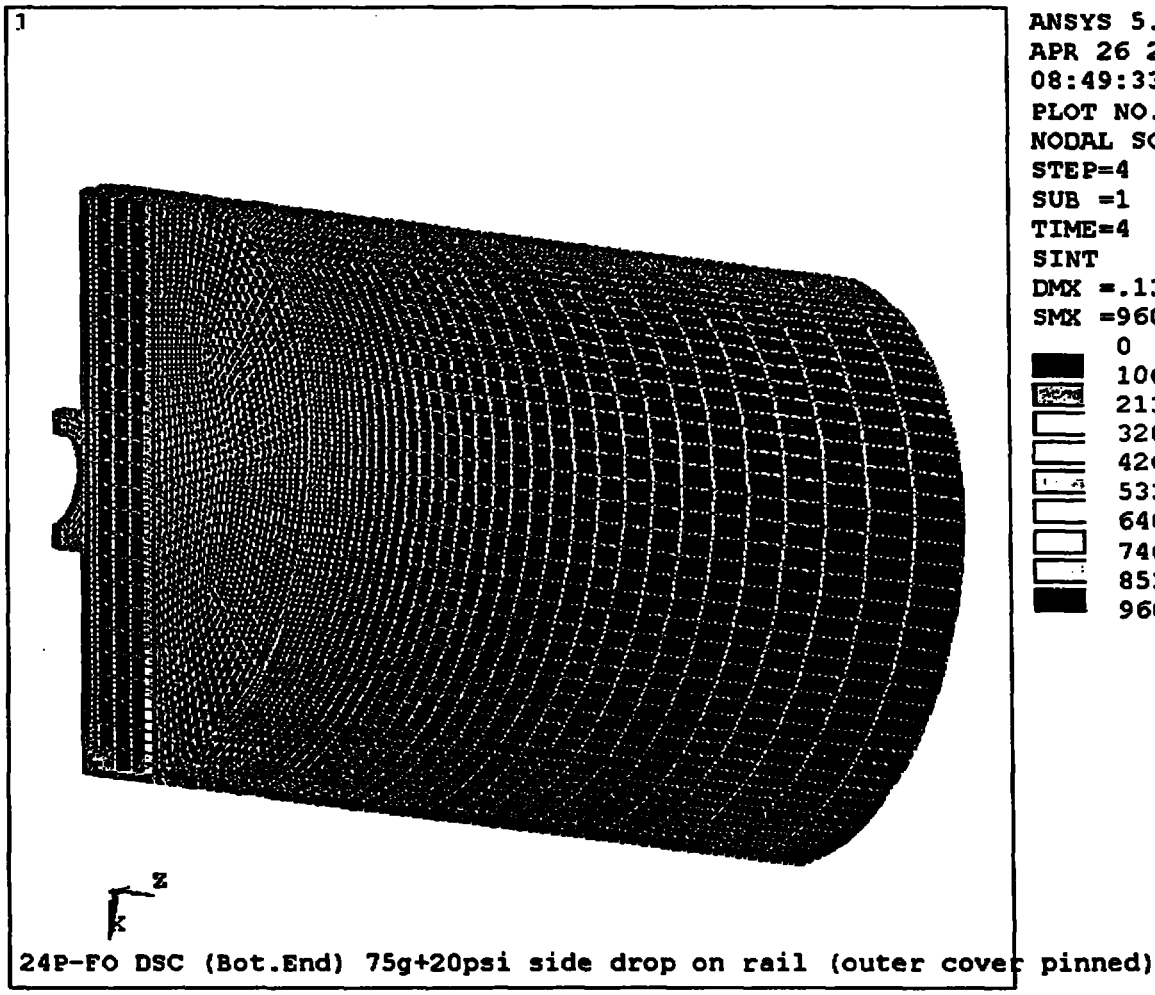

Figure B21-8

24P-FO DSC Shell Assembly, Bottom End Components

Stress Intensity Contour

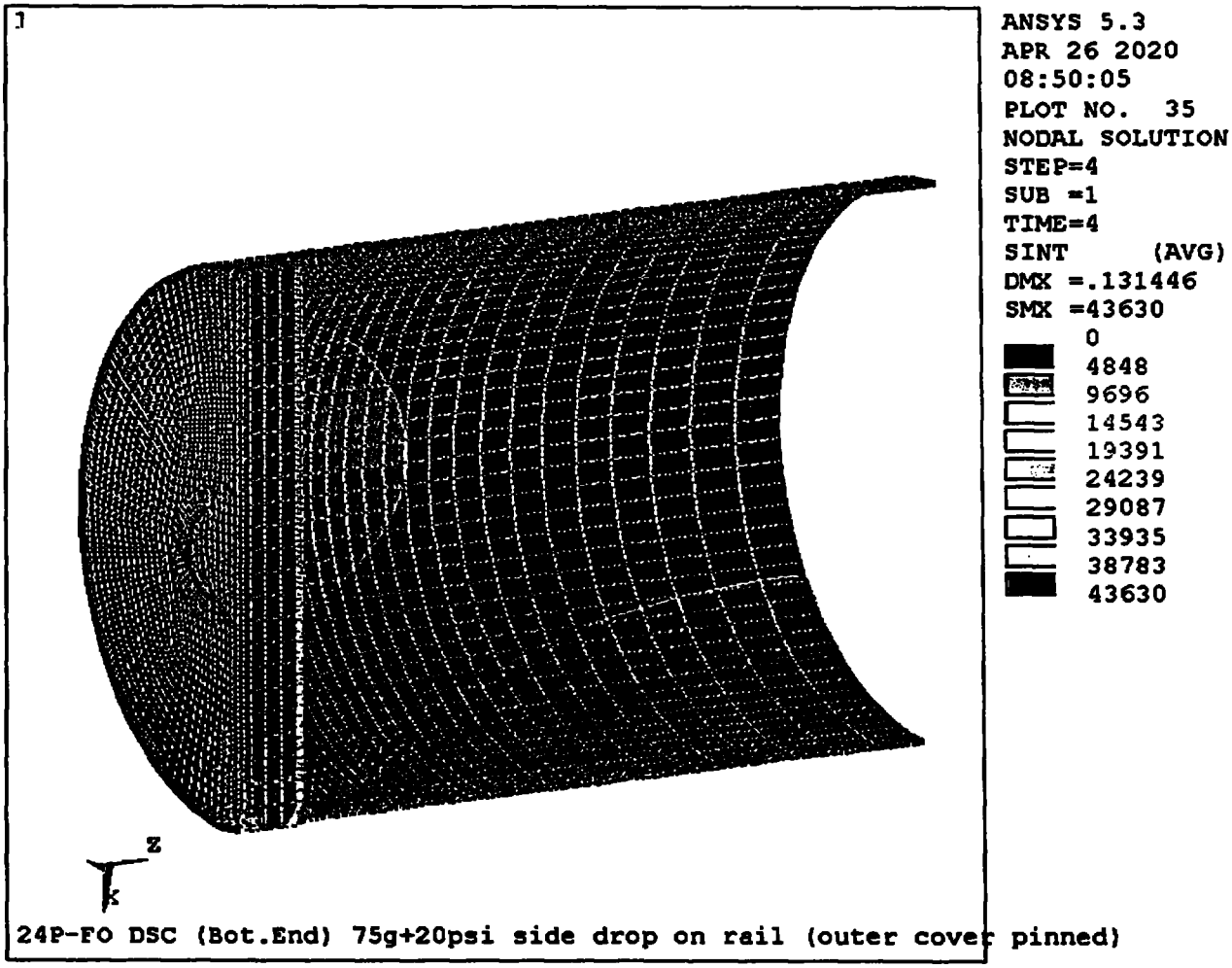

Figure B21-9

24P-FO DSC Shell Assembly, Bottom End Components

Stress Intensity Contour

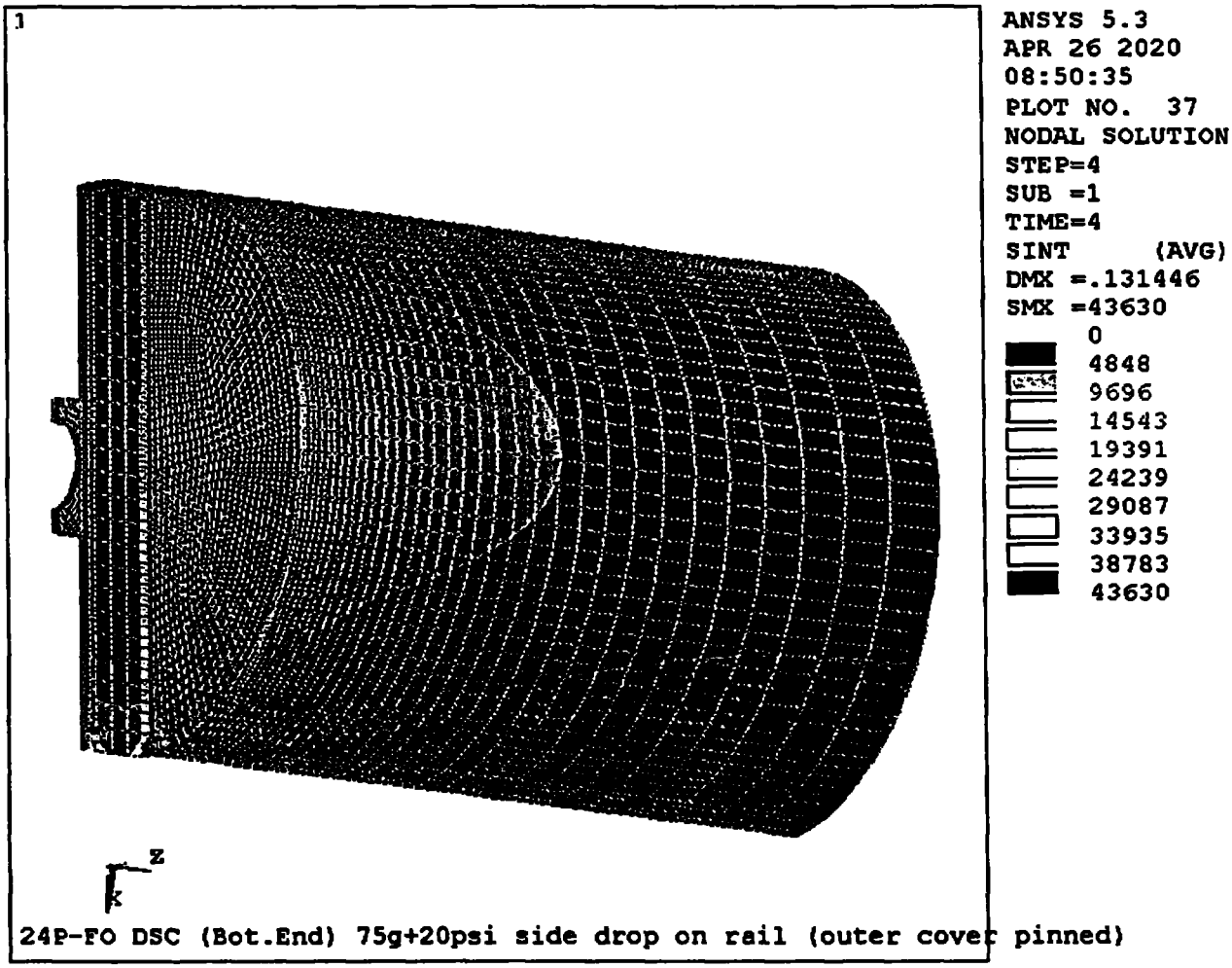

Figure B21-10

24P-FO DSC Shell Assembly, Bottom End Components

Stress Intensity Contour

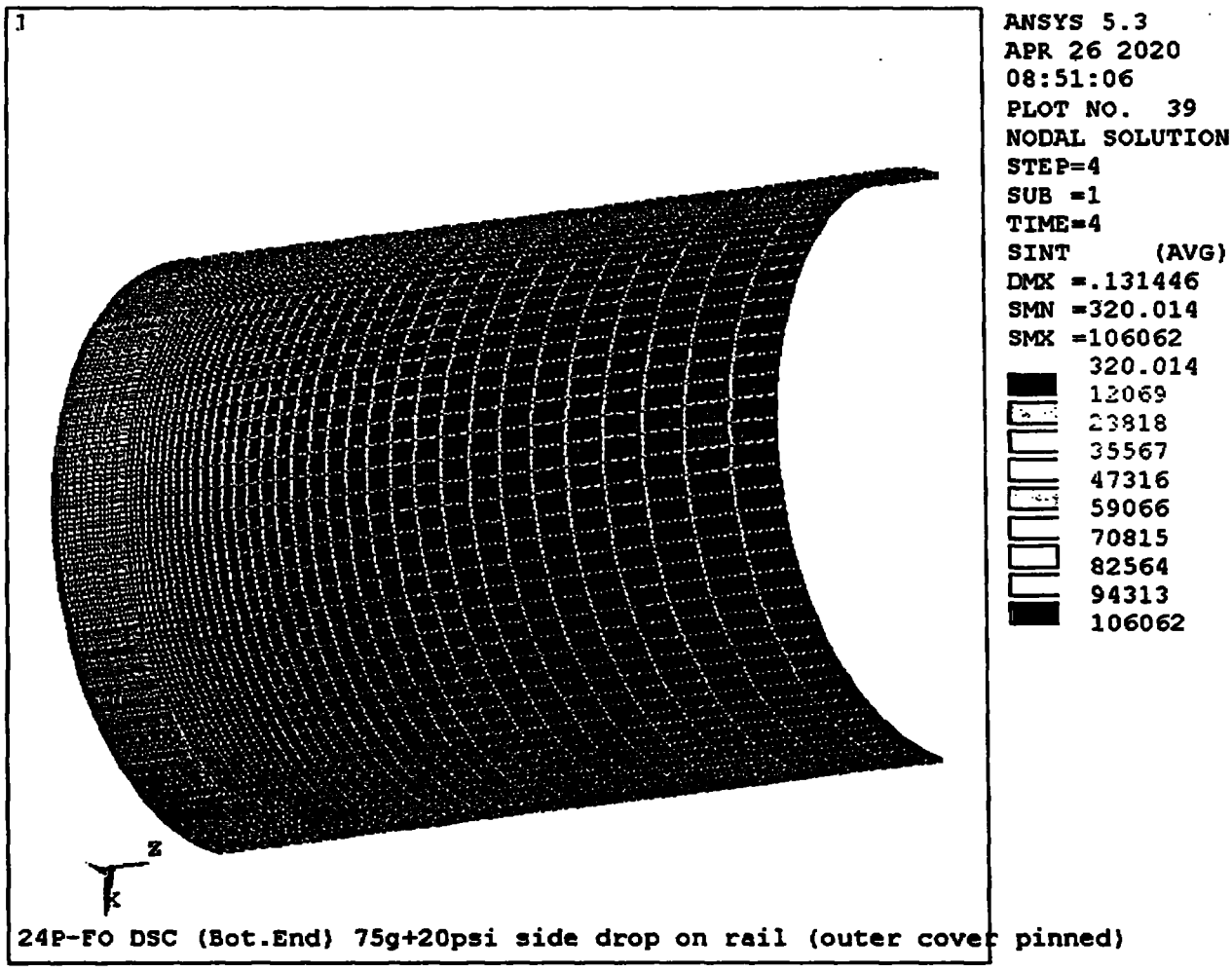

Figure B21-11

24P-FO DSC Shell Assembly, Cylindrical Shell (Bottom Half)

Stress Intensity Contour

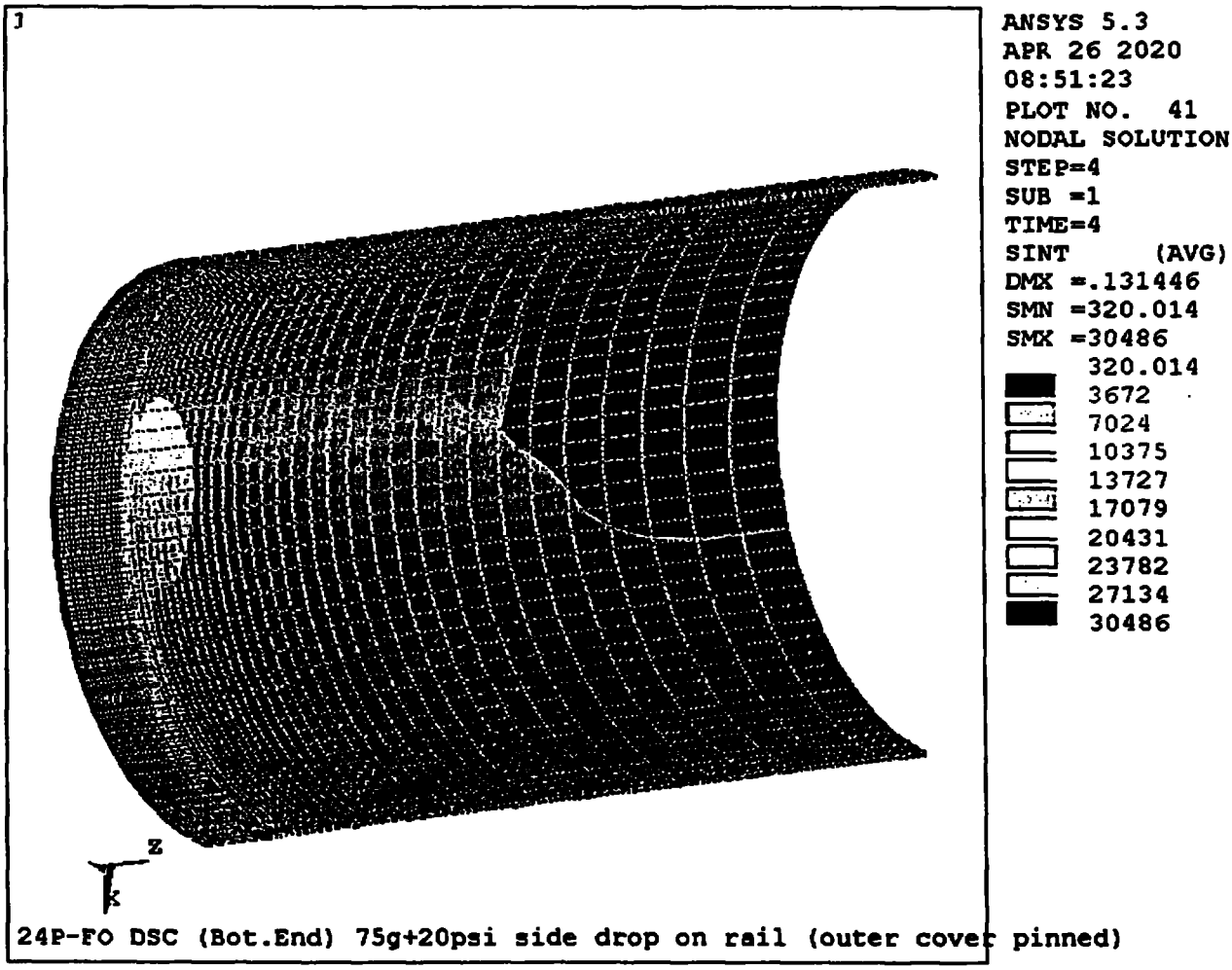

Figure B21-12

24P-FO DSC Shell Assembly, Cylindrical Shell (Bottom Half)

Stress Intensity Contour

Appendix B22

ANSYS Temperature and Stress Intensity Contour Plots for Run PB24PTH

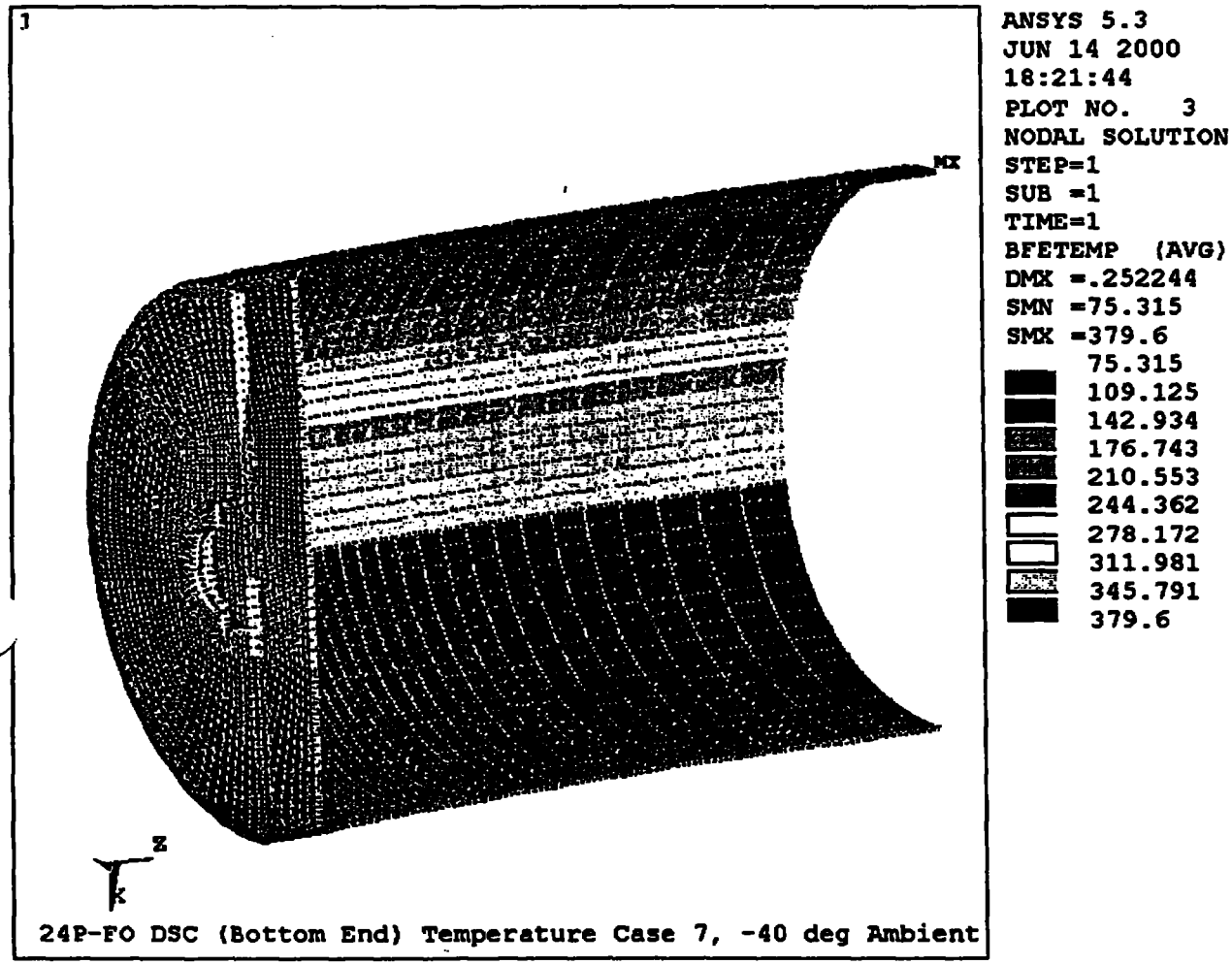

Figure B22-1

24P-FO DSC Shell Assembly, Bottom End Components

Thermal Contour

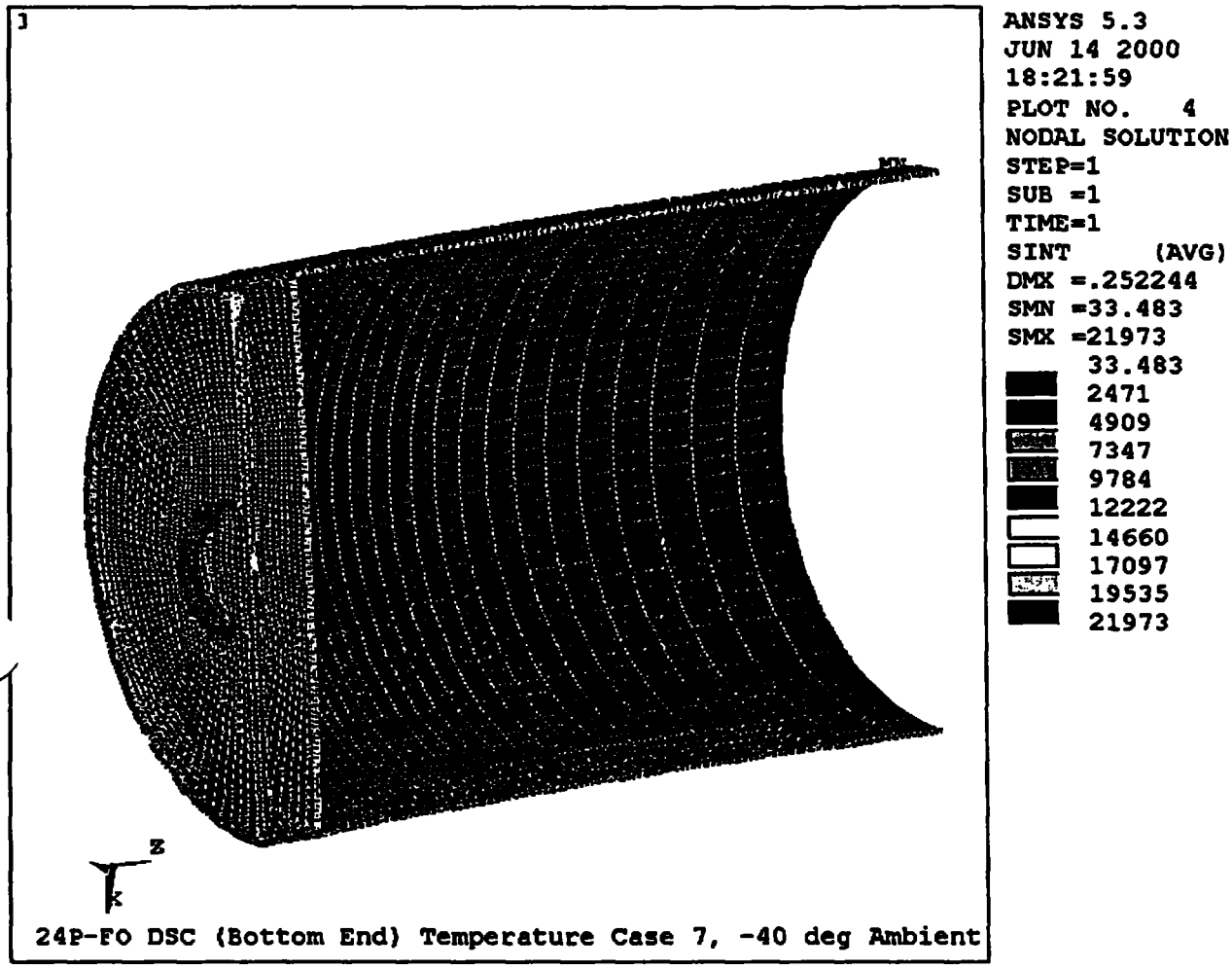

Figure B22-2

24P-FO DSC Shell Assembly, Bottom End Components

Stress Intensity Contour

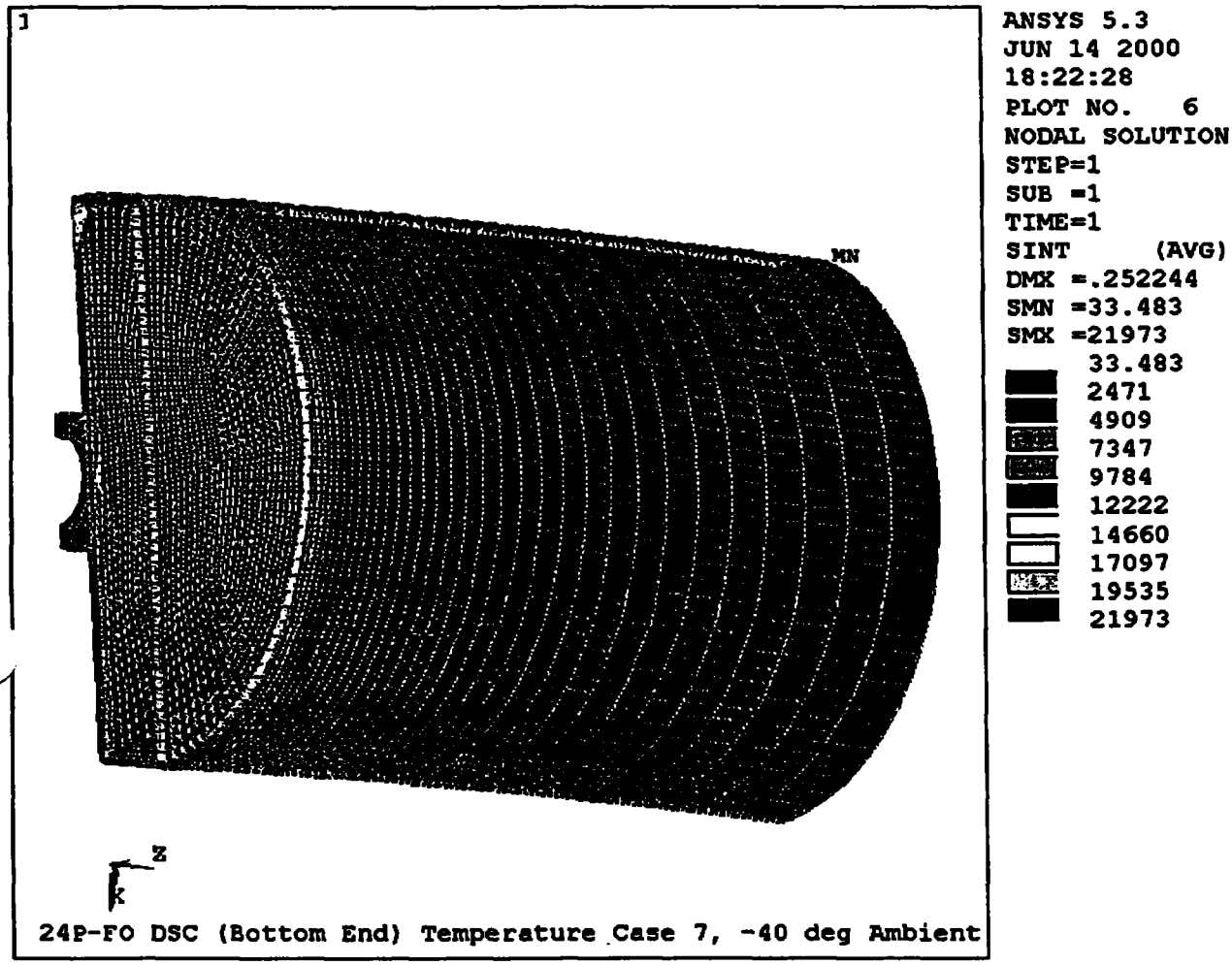

Figure B22-3

24P-FO DSC Shell Assembly, Bottom End Components

Stress Intensity Contour

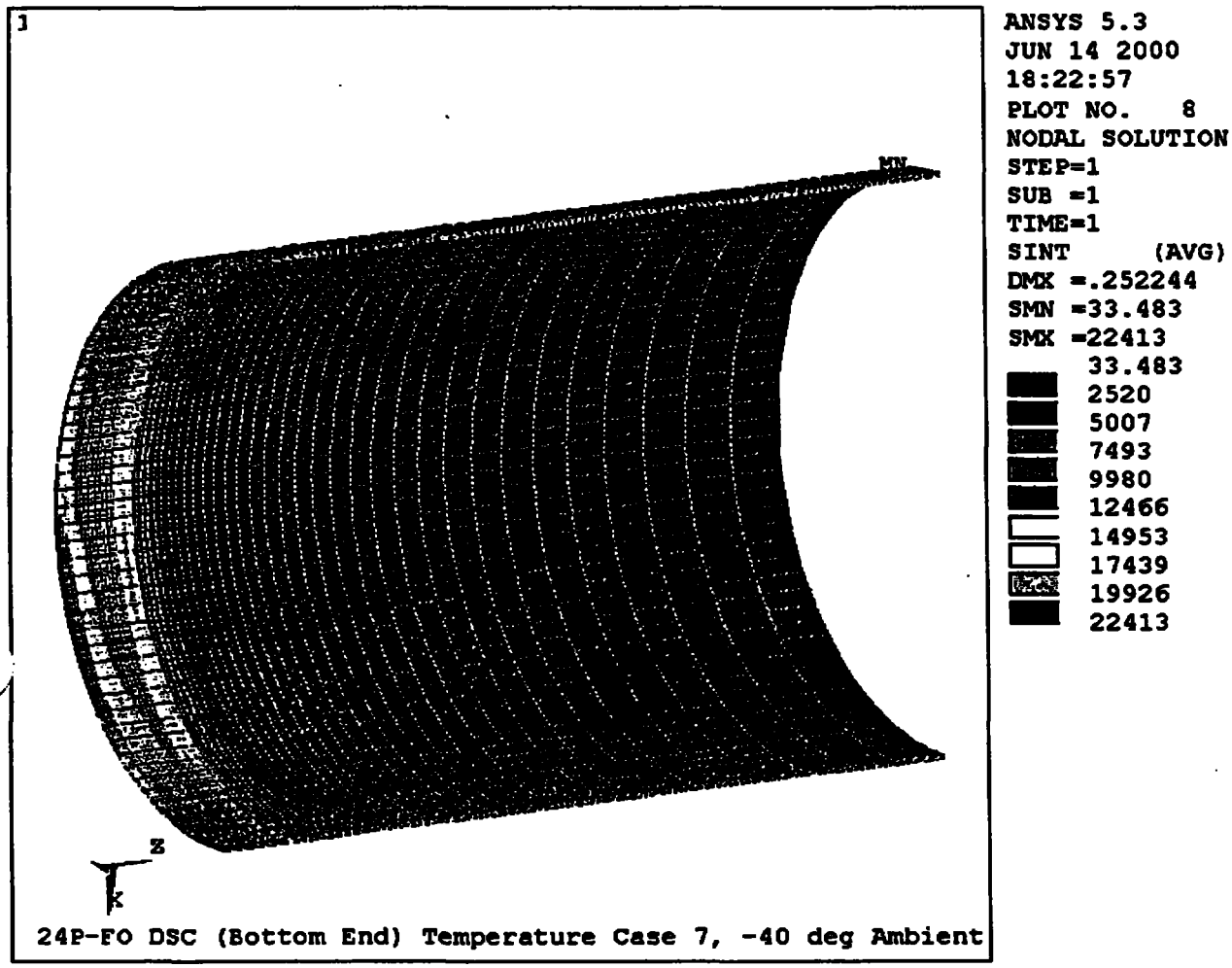

Figure B22-4

24P-FO DSC Shell Assembly, Cylindrical Shell (Bottom Half)

Stress Intensity Contour

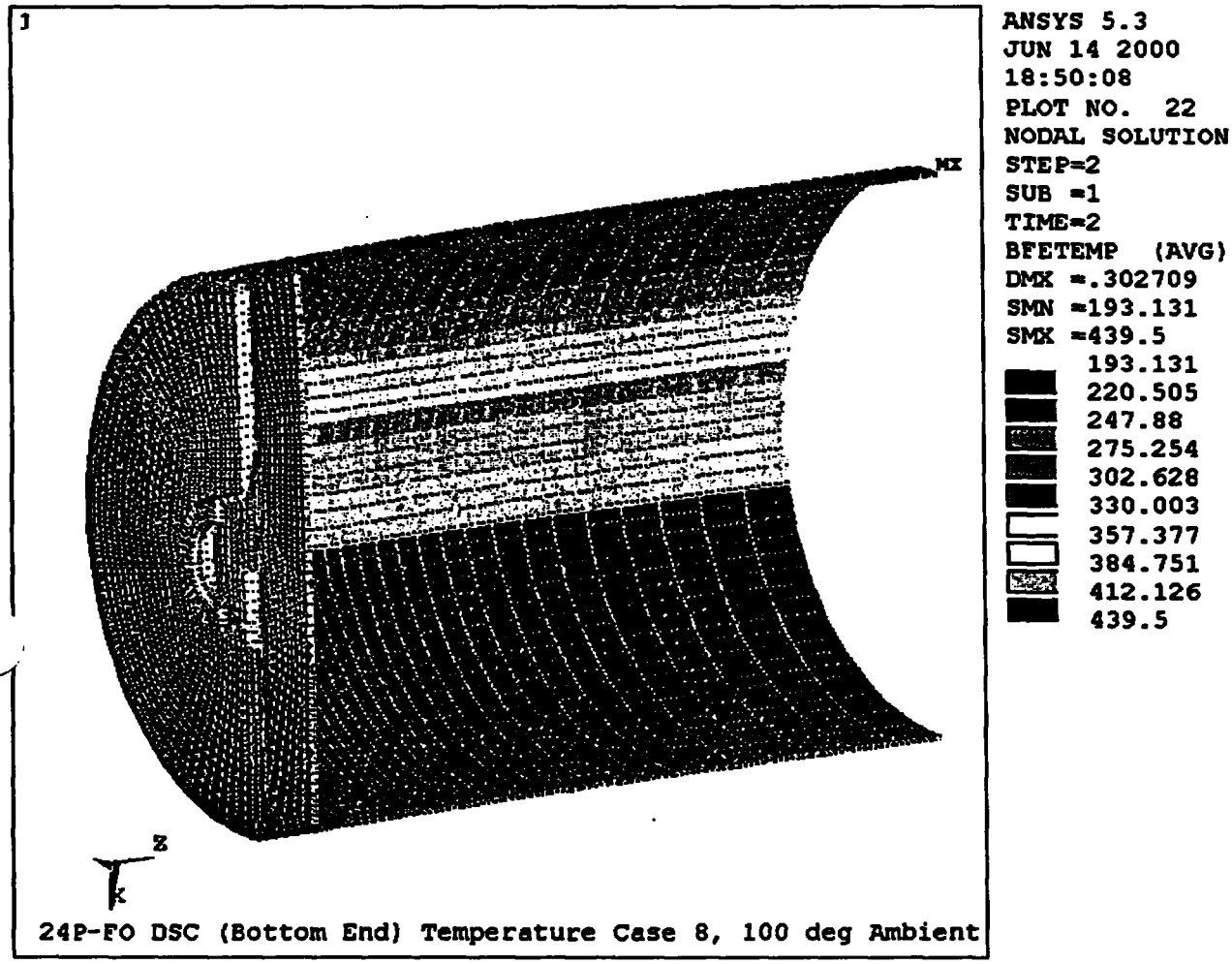

Figure B22-5

24P-FO DSC Shell Assembly, Bottom End Components

Thermal Contour

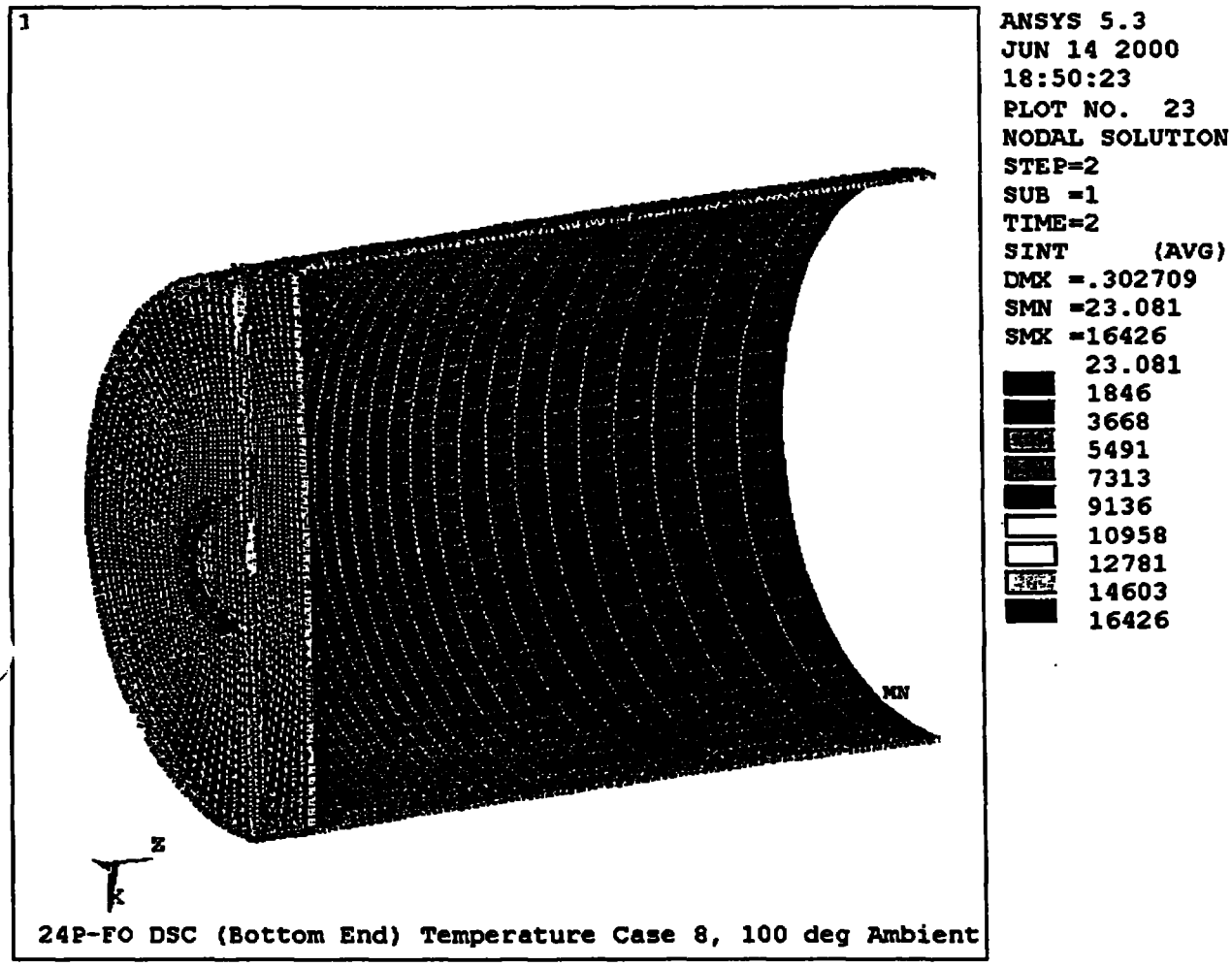

Figure B22-6

24P-FO DSC Shell Assembly, Bottom End Components

Stress Intensity Contour

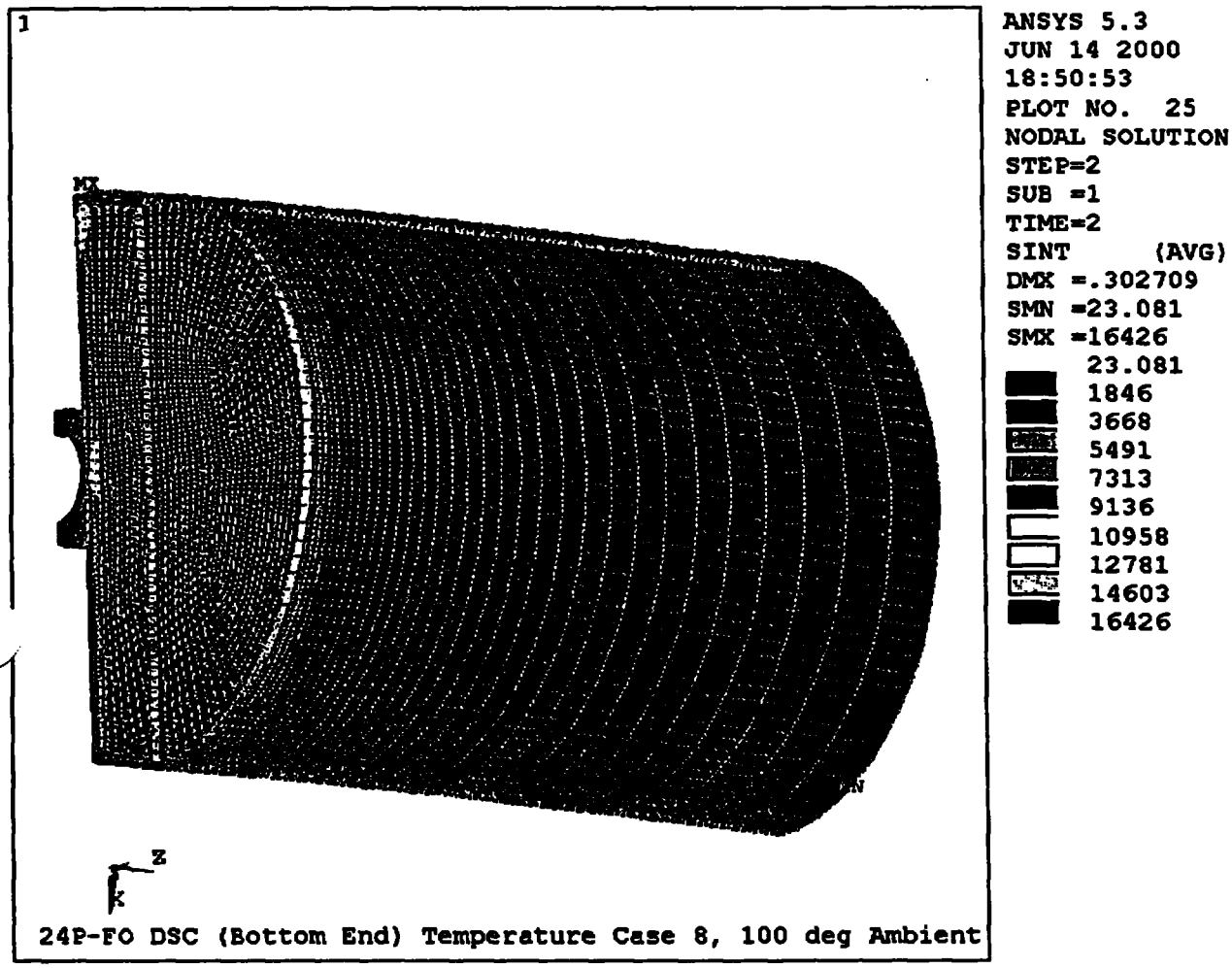

Figure B22-7

24P-FO DSC Shell Assembly, Bottom End Components

Stress Intensity Contour

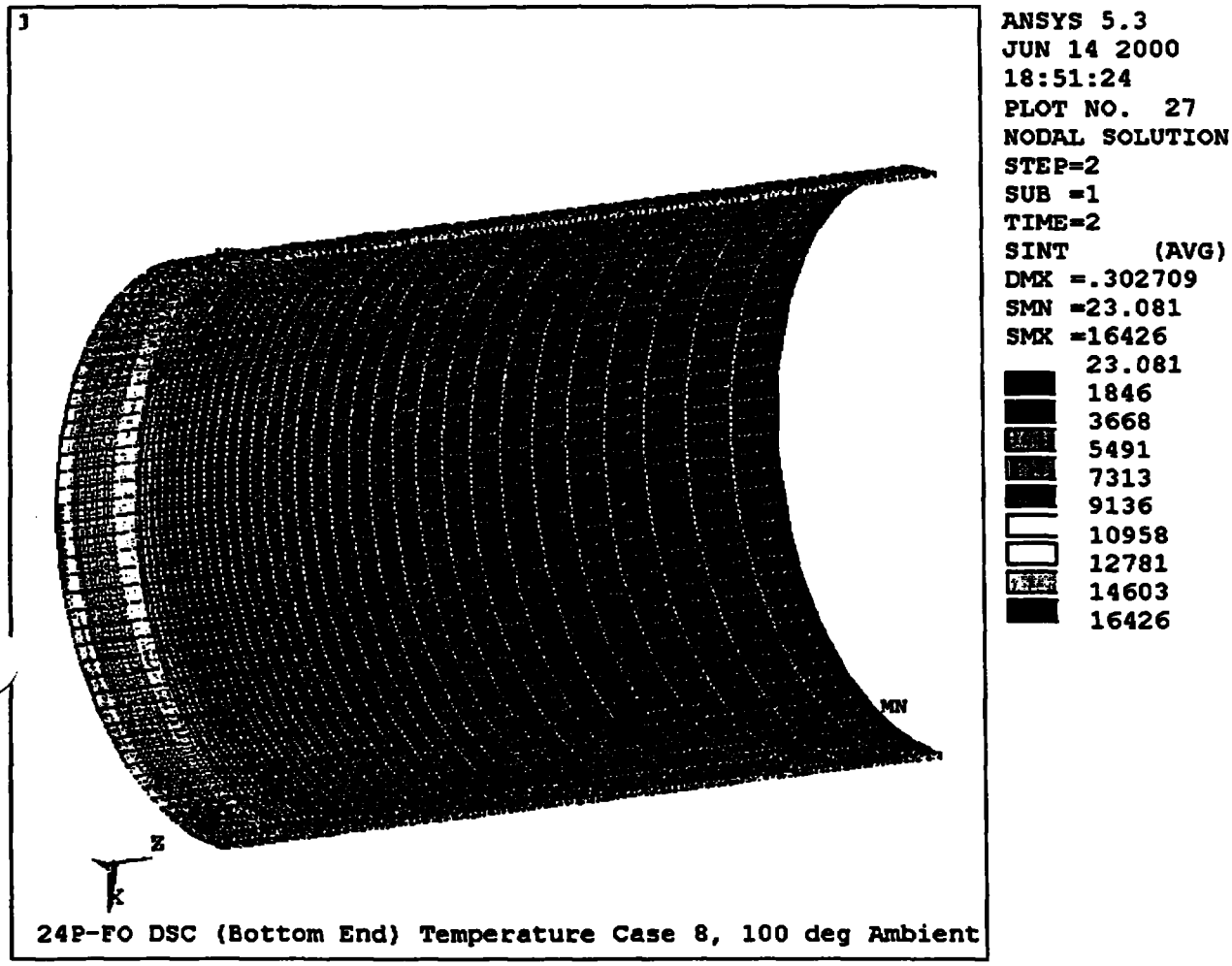

Figure B22-8

24P-FO DSC Shell Assembly, Cylindrical Shell (Bottom Half)

Stress Intensity Contour

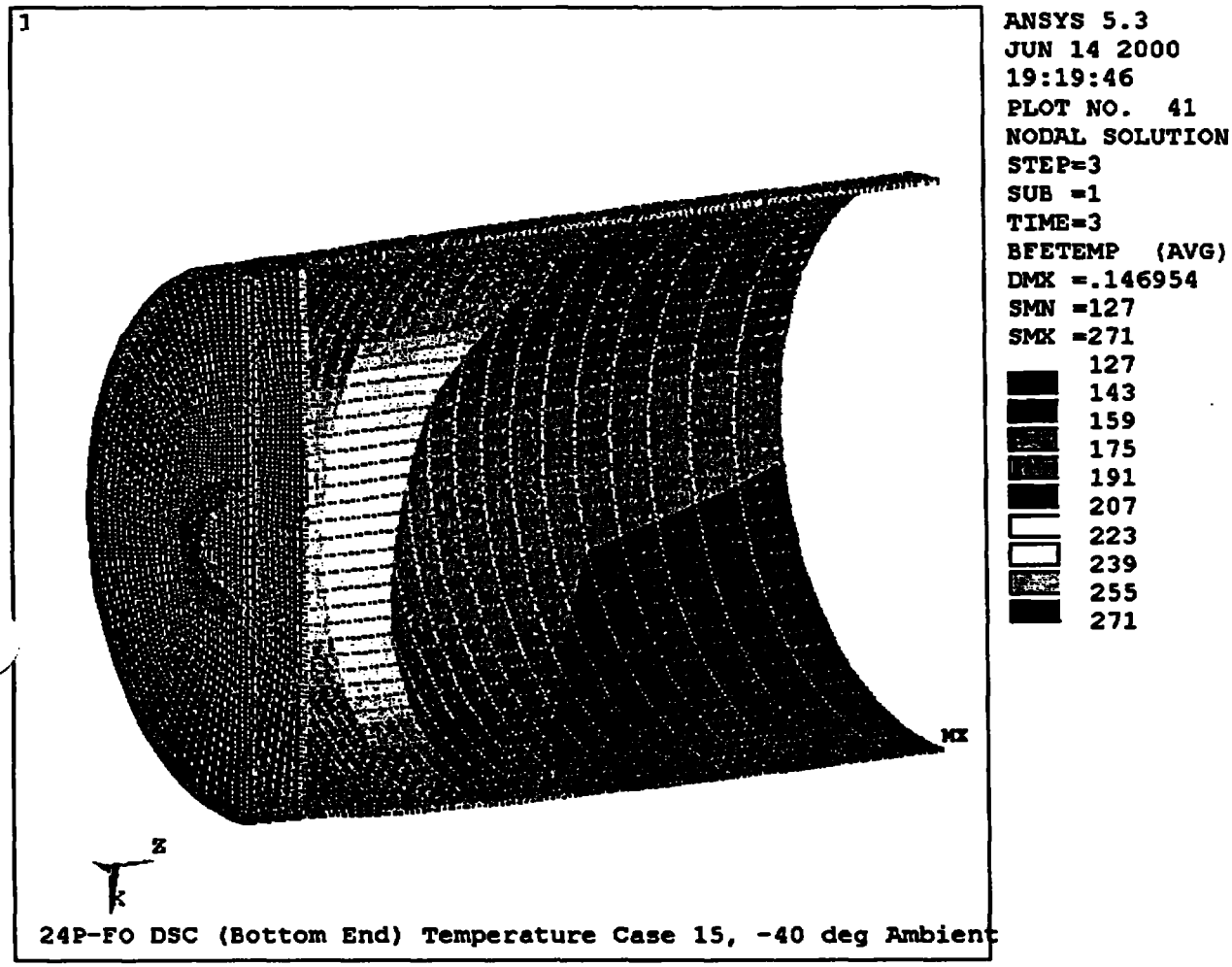

Figure B22-9

24P-FO DSC Shell Assembly, Bottom End Components

Thermal Contour

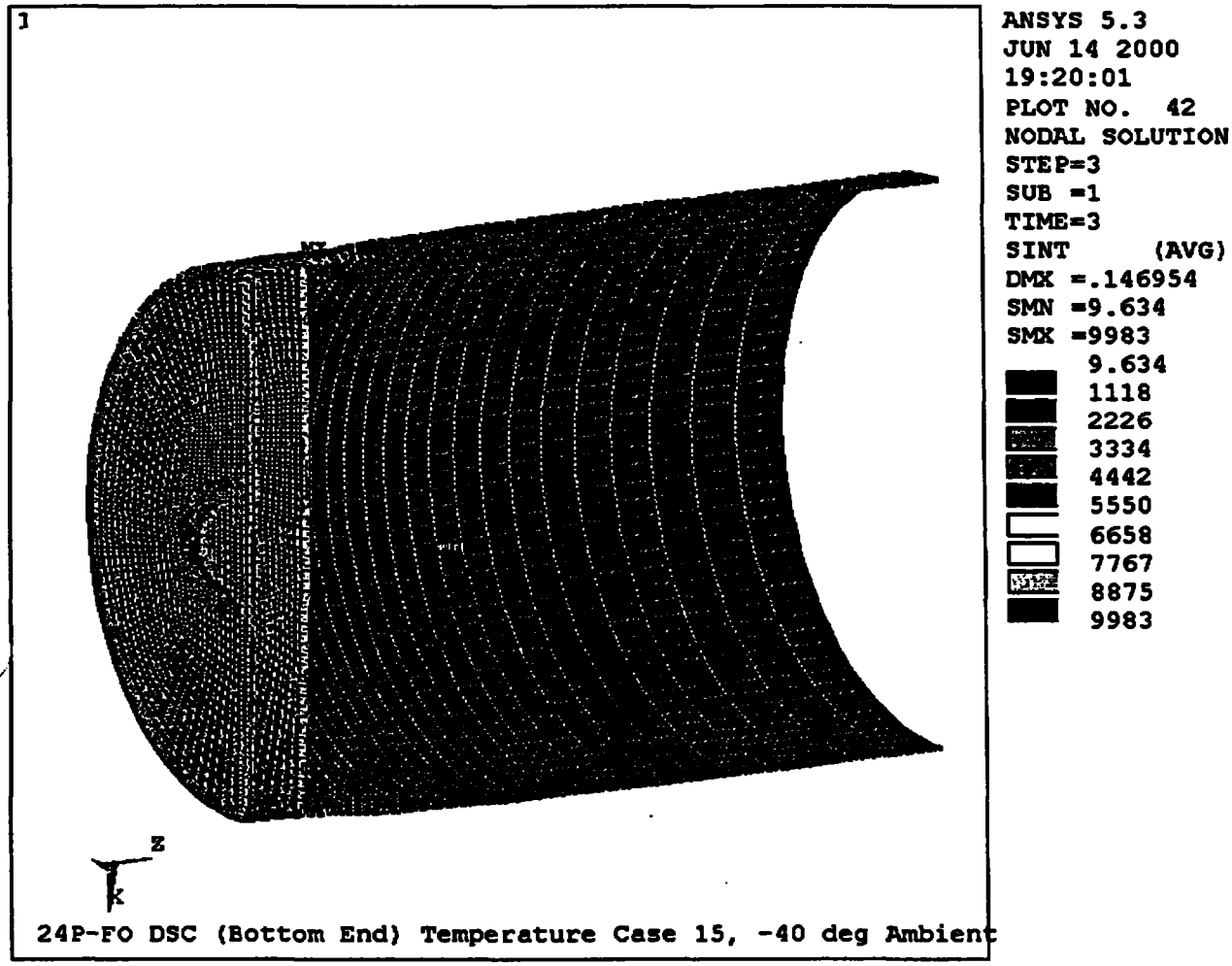

Figure B22-10

24P-FO DSC Shell Assembly, Bottom End Components

Stress Intensity Contour

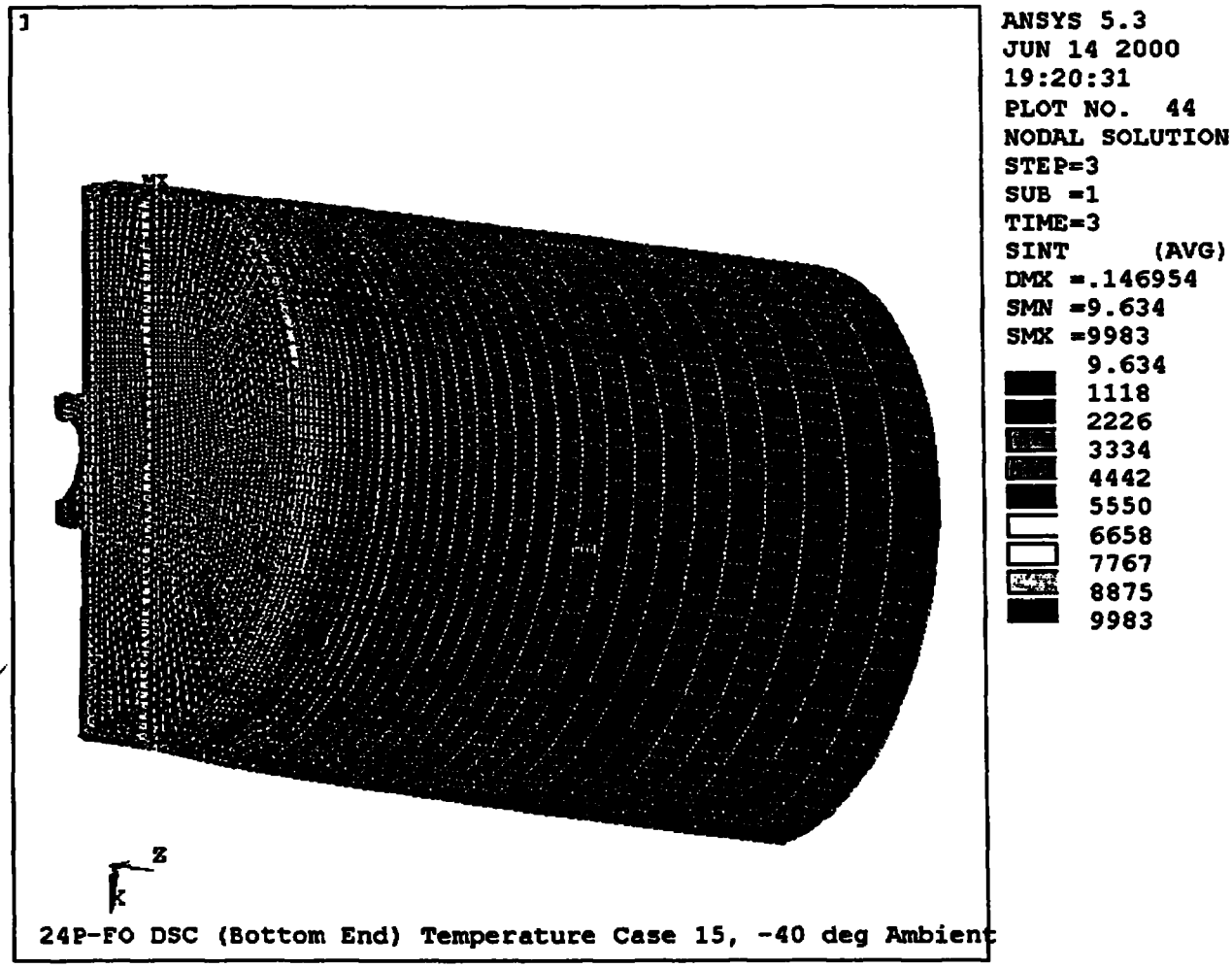

Figure B22-11

24P-FO DSC Shell Assembly, Bottom End Components

Stress Intensity Contour

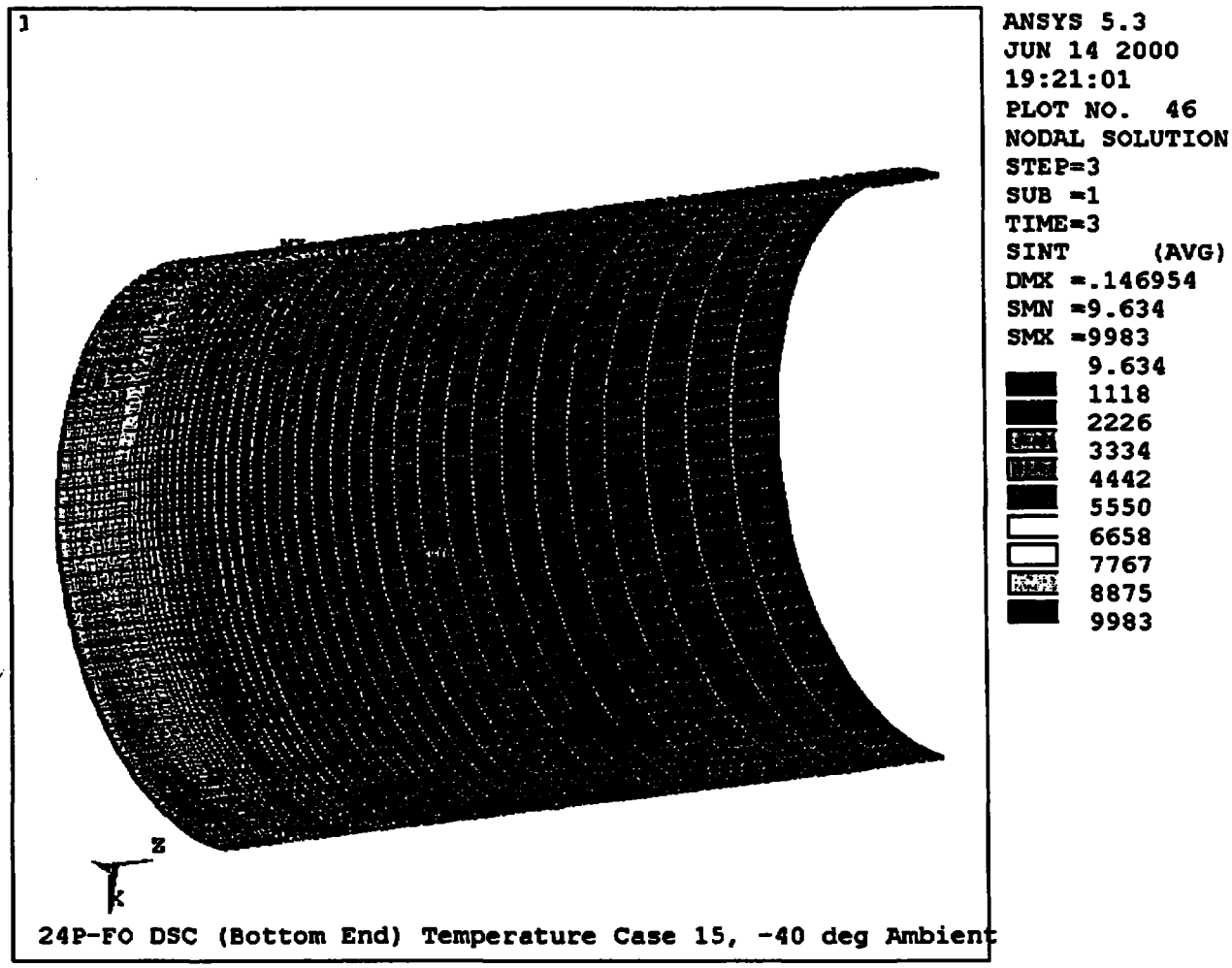

Figure B22-12

24P-FO DSC Shell Assembly, Cylindrical Shell (Bottom Half)

Stress Intensity Contour

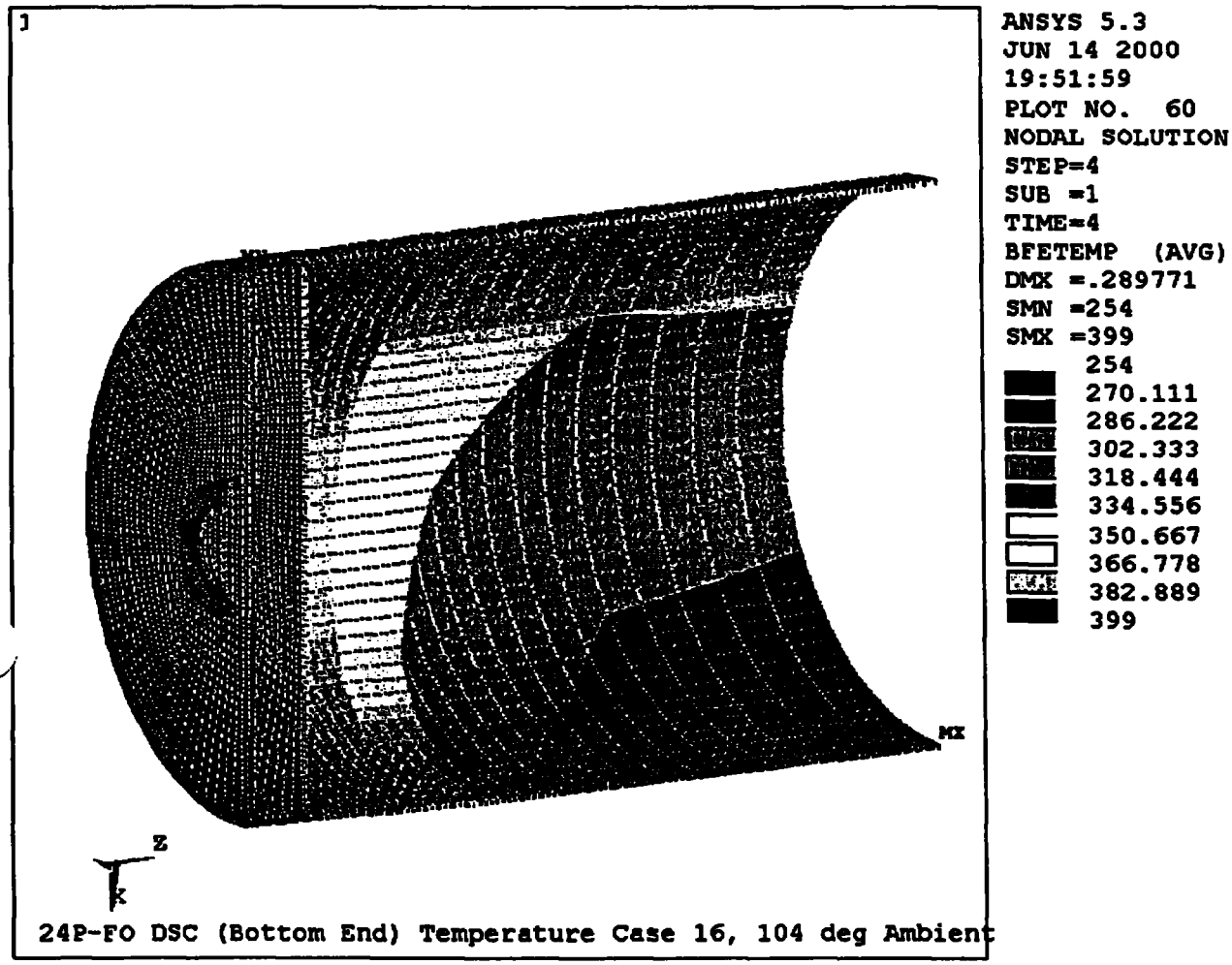

Figure B22-13

24P-FO DSC Shell Assembly, Bottom End Components

Thermal Contour

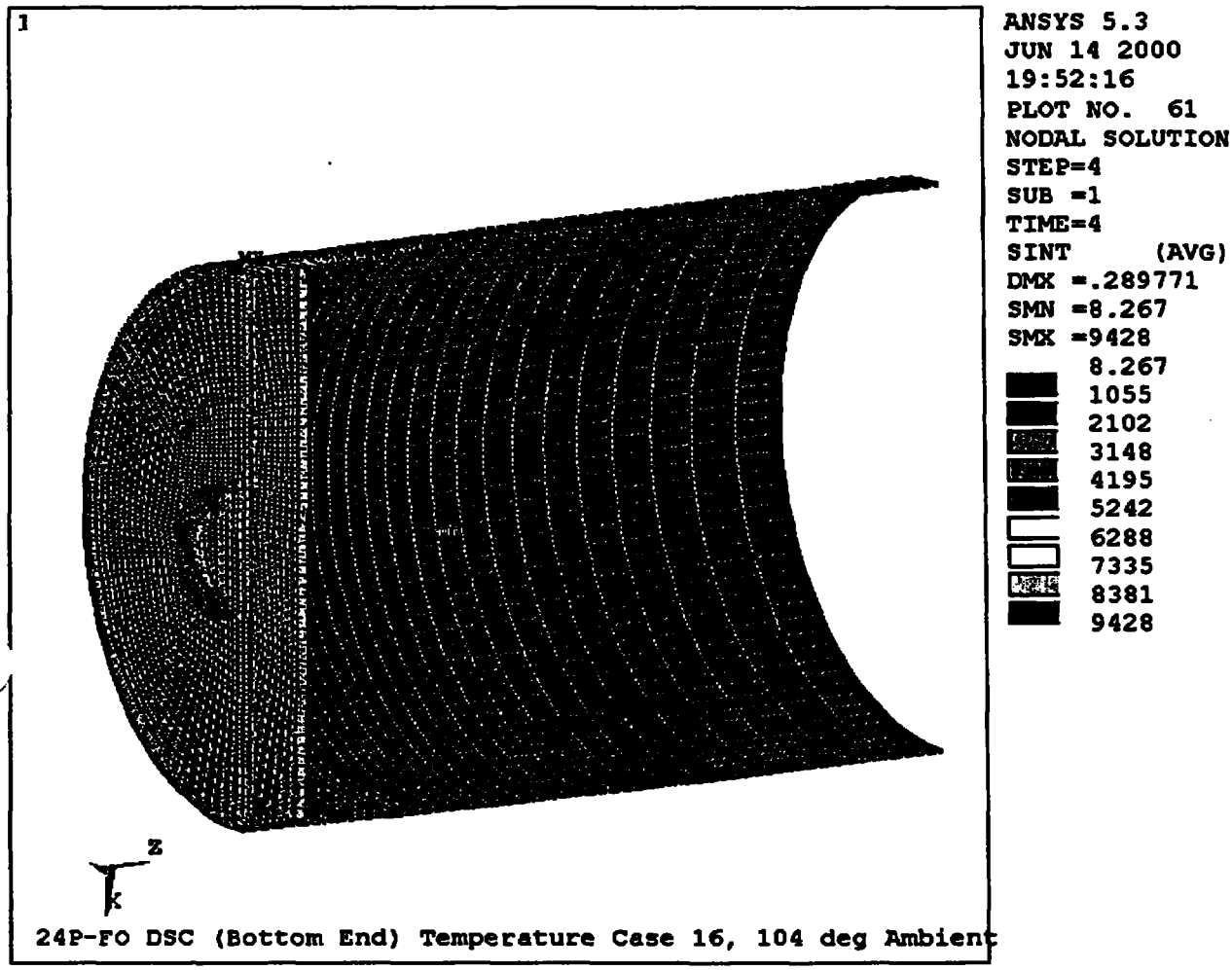

Figure B22-14

24P-FO DSC Shell Assembly, Bottom End Components

Stress Intensity Contour

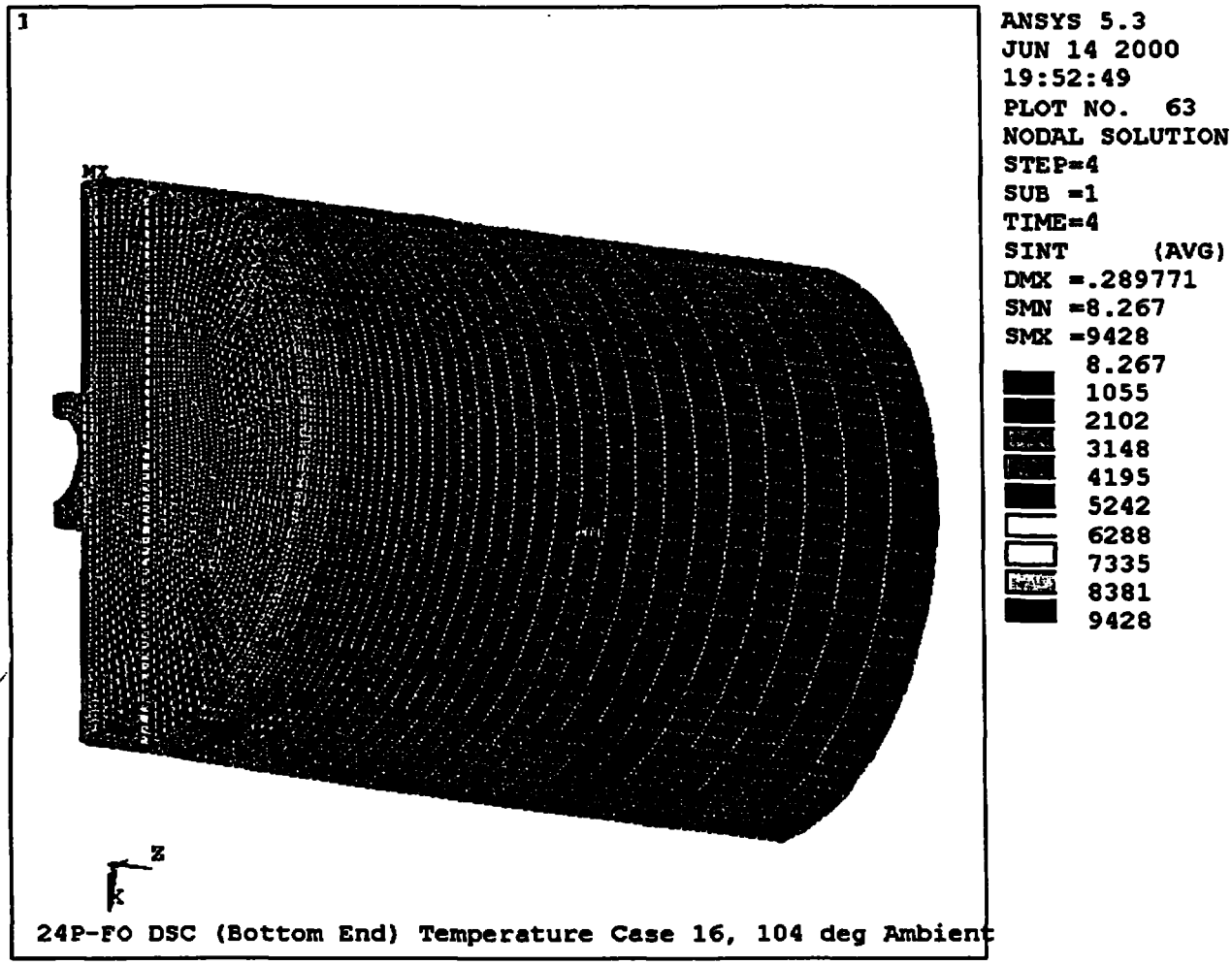

Figure B22-15

24P-FO DSC Shell Assembly, Bottom End Components

Stress Intensity Contour

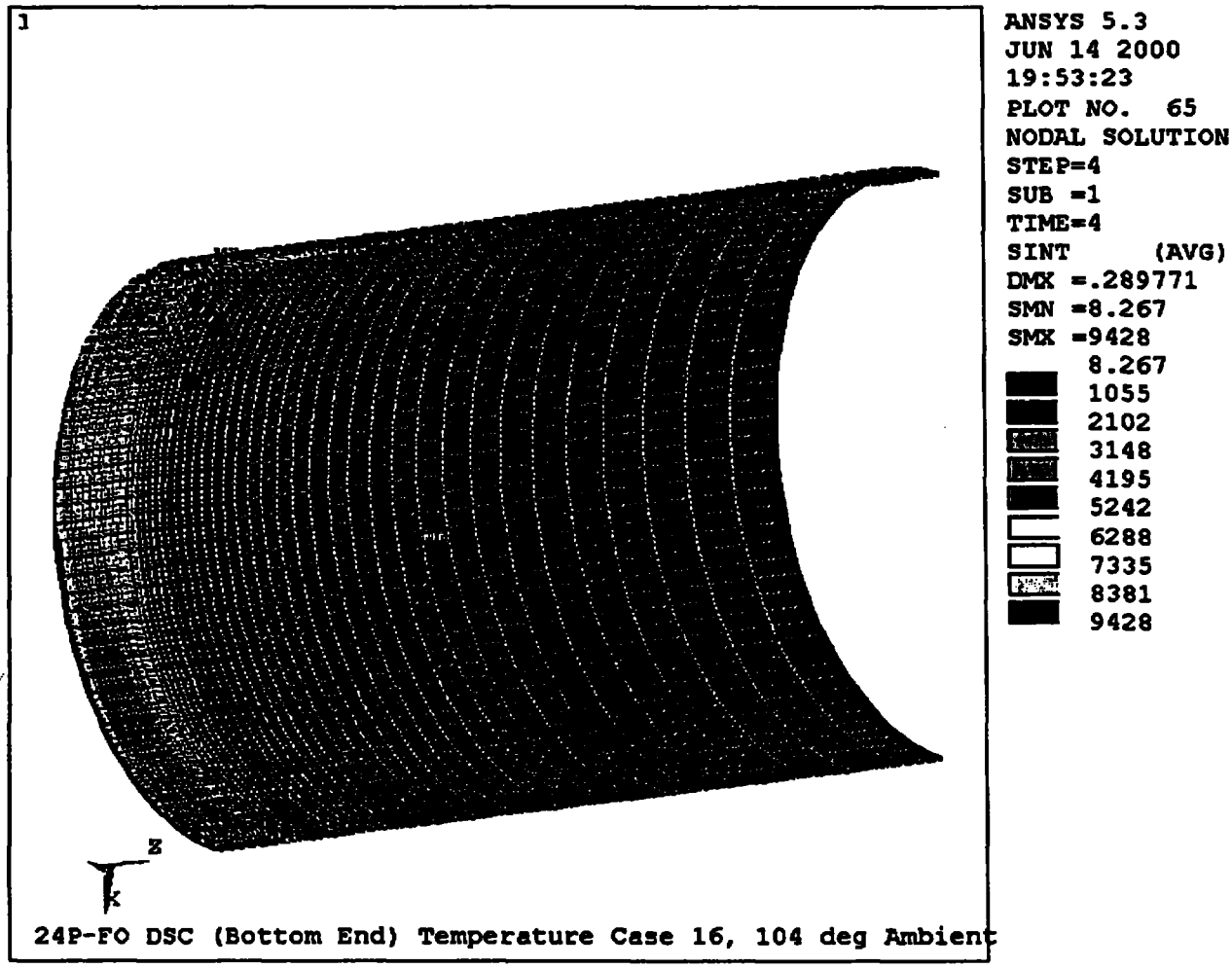

Figure B22-16

24P-FO DSC Shell Assembly, Cylindrical Shell (Bottom Half)

Stress Intensity Contour

Appendix B23

ANSYS Temperature and Stress Intensity Contour Plots for Run PB24PTH2

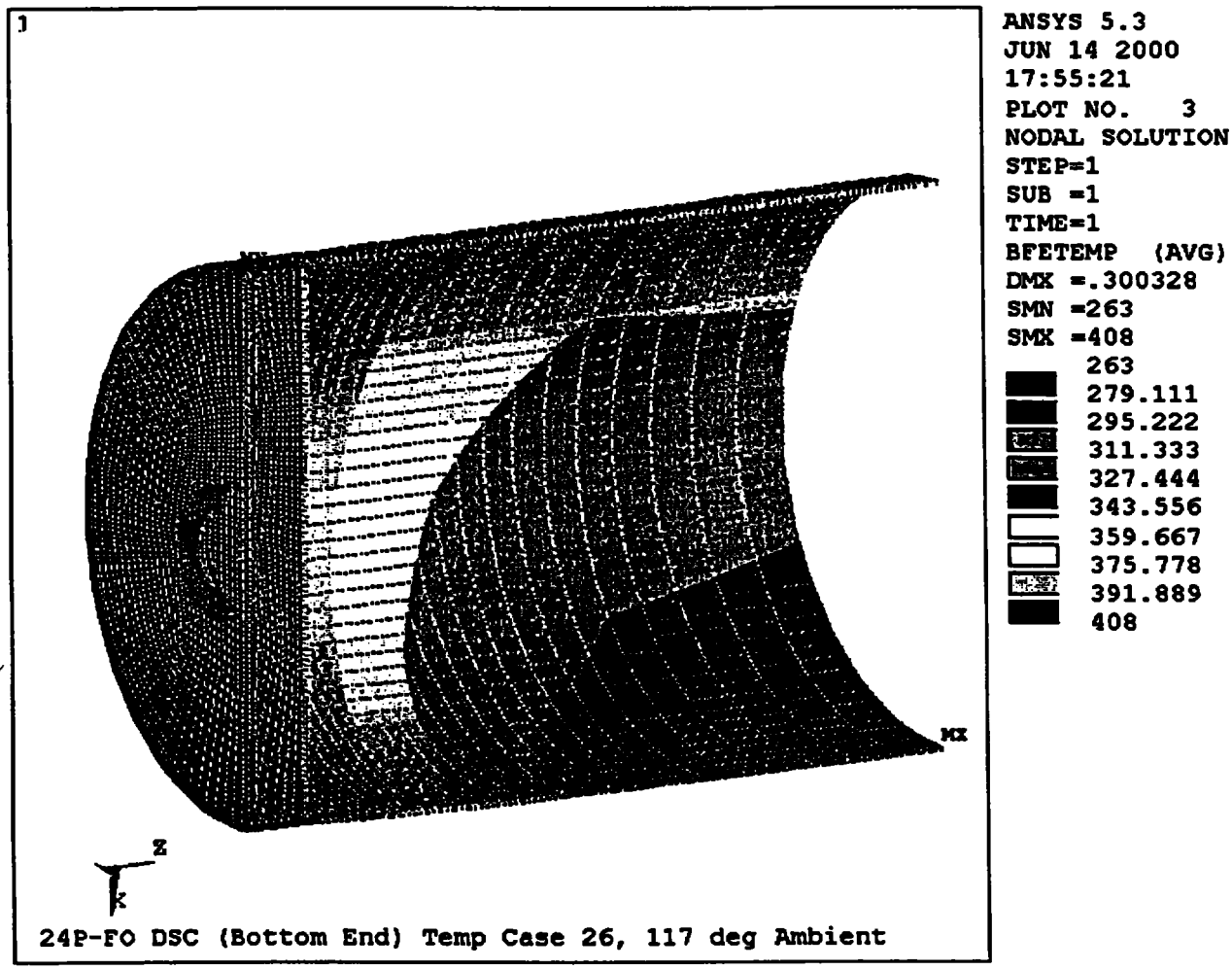

Figure B23-1

24P-FO DSC Shell Assembly, Bottom End Components

Thermal Contour

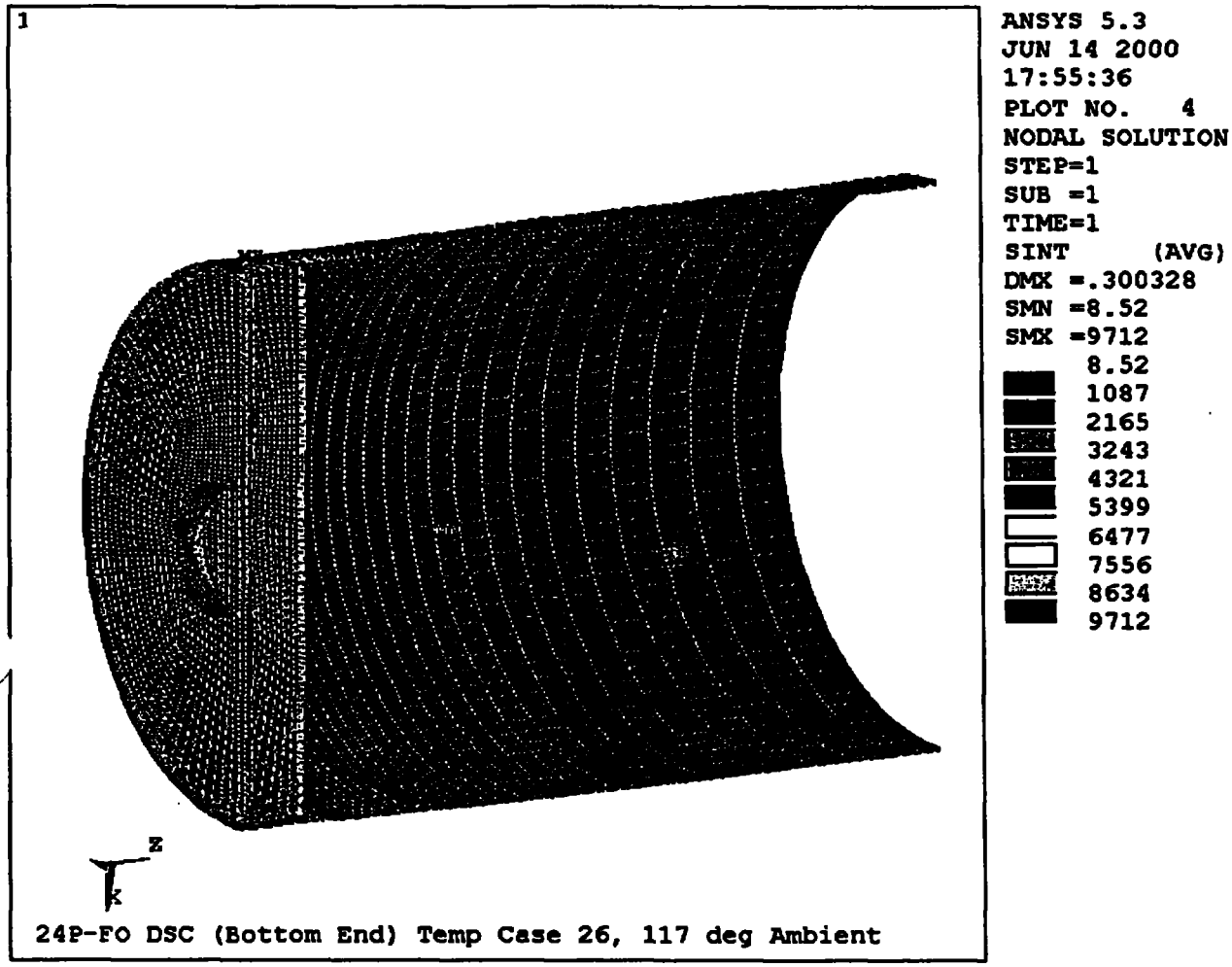

Figure B23-2

24P-FO DSC Shell Assembly, Bottom End Components

Stress Intensity Contour

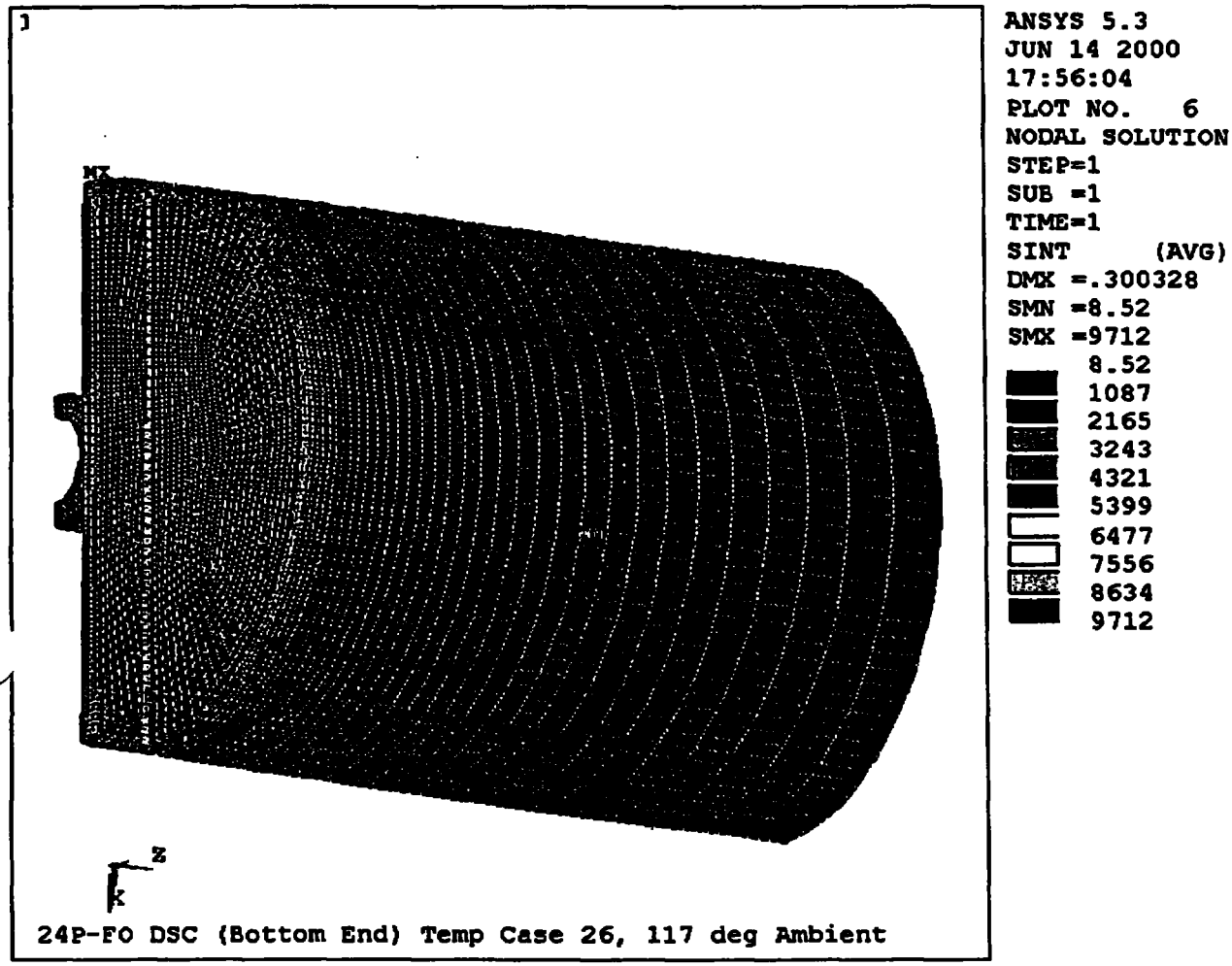

Figure B23-3

24P-FO DSC Shell Assembly, Bottom End Components

Stress Intensity Contour

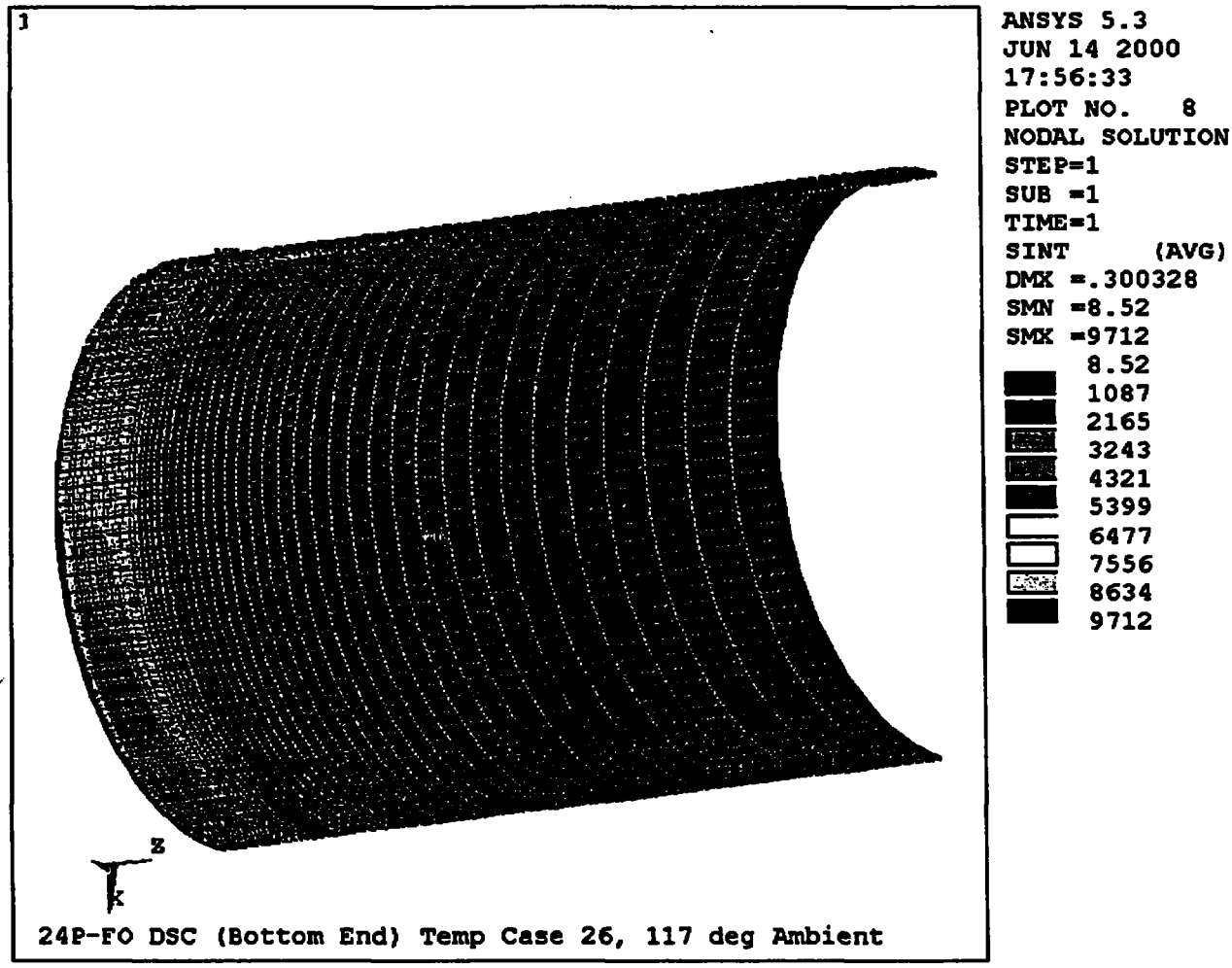

Figure B23-4

24P-FO DSC Shell Assembly, Cylindrical Shell (Bottom Half)

Stress Intensity Contour

Appendix B24

ANSYS Stress Intensity Contour Plots for Run PB24PGP1

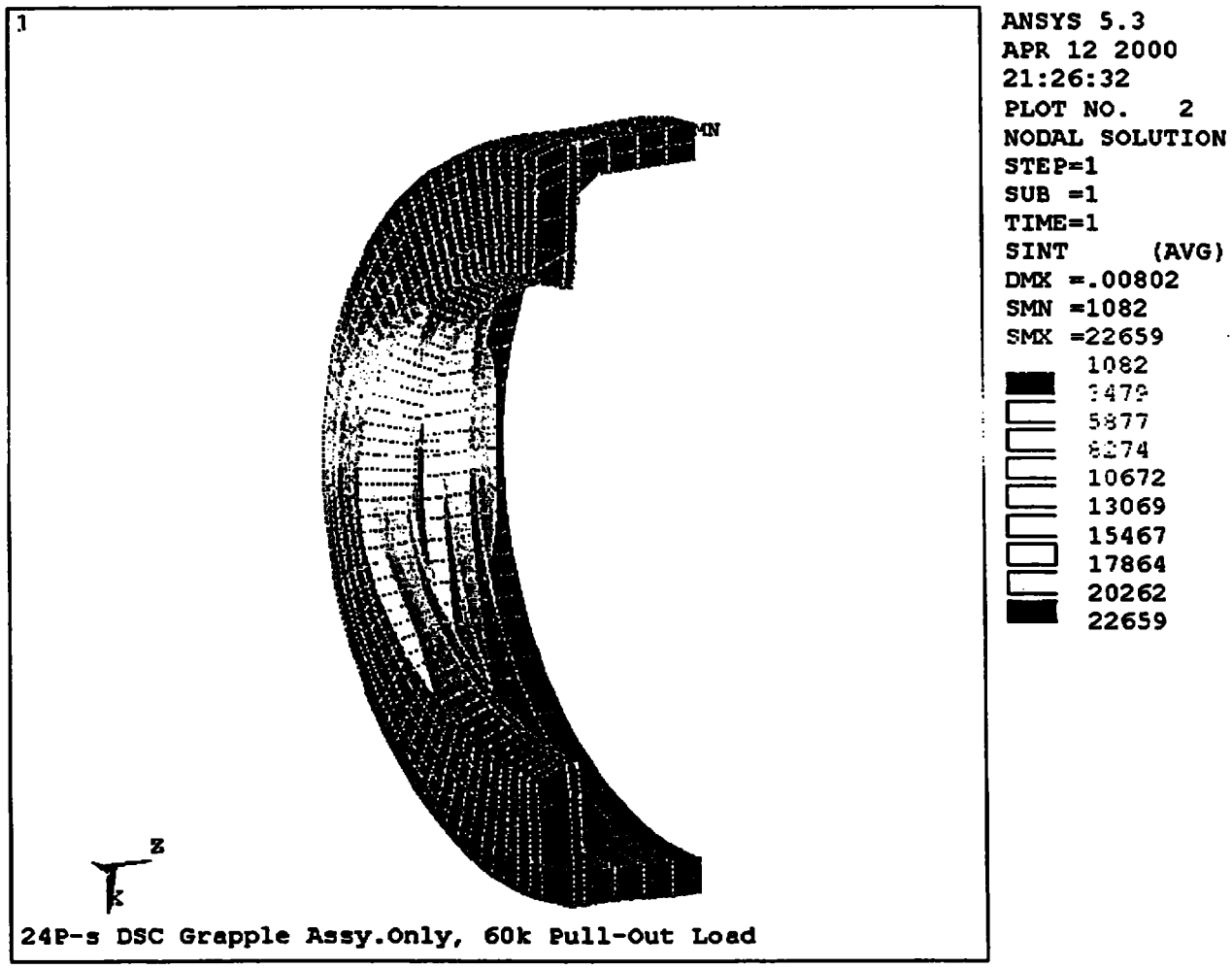

Figure B24-1

24P-FO DSC Shell Assembly, Grapple Assembly

Stress Intensity Contour

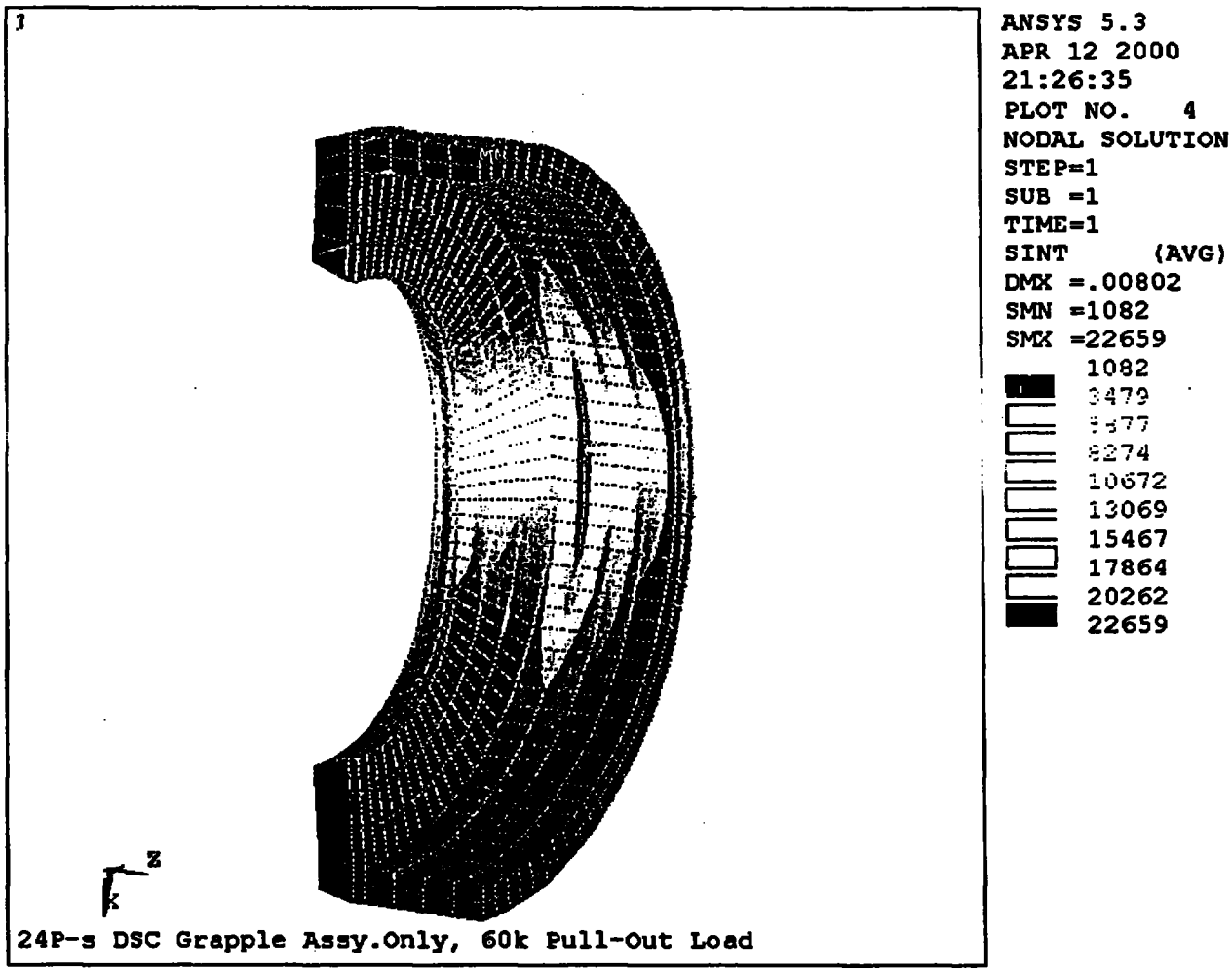

Figure B24-2

24P-FO DSC Shell Assembly, Grapple Assembly

Stress Intensity Contour

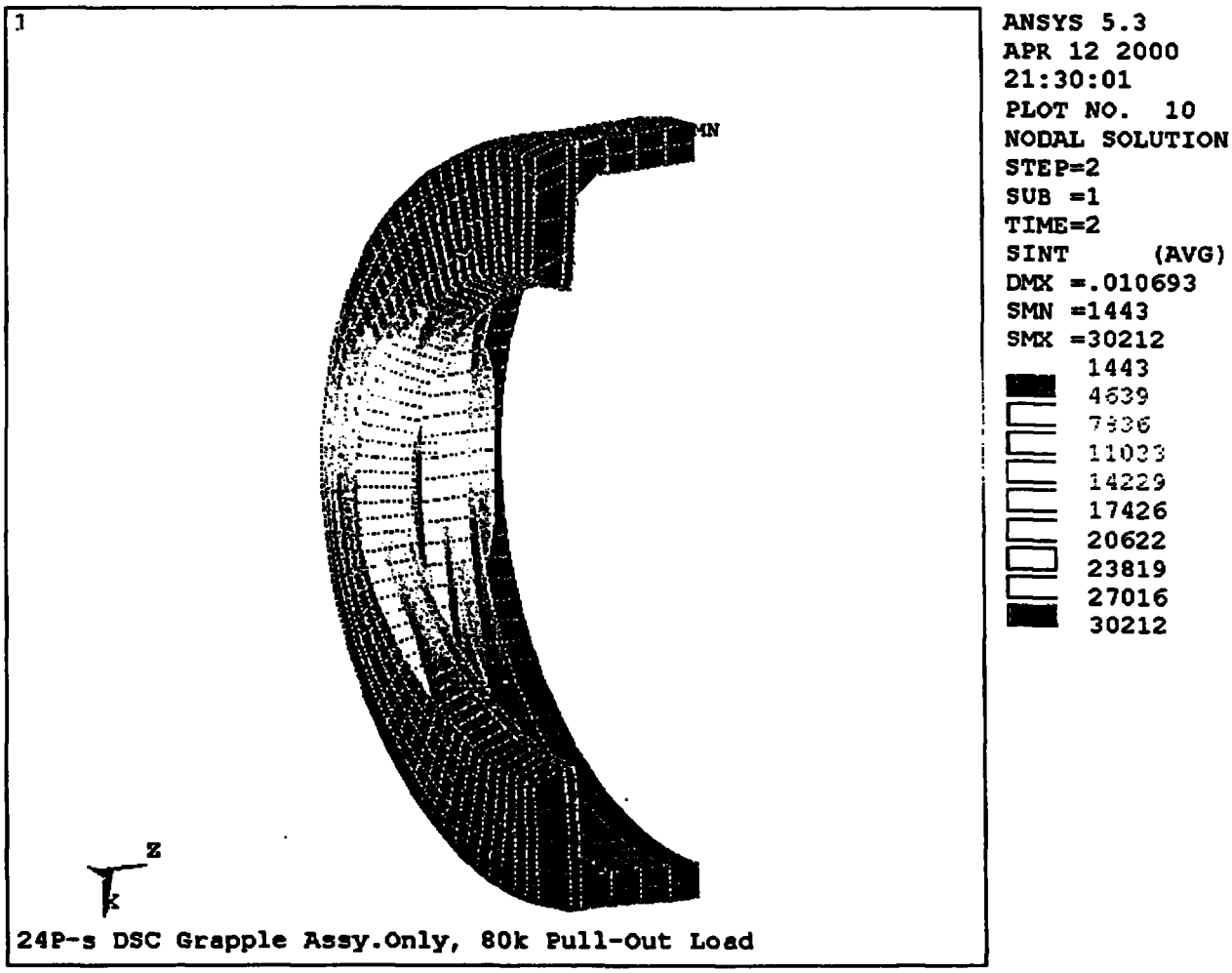

Figure B24-3

24P-FO DSC Shell Assembly, Grapple Assembly

Stress Intensity Contour

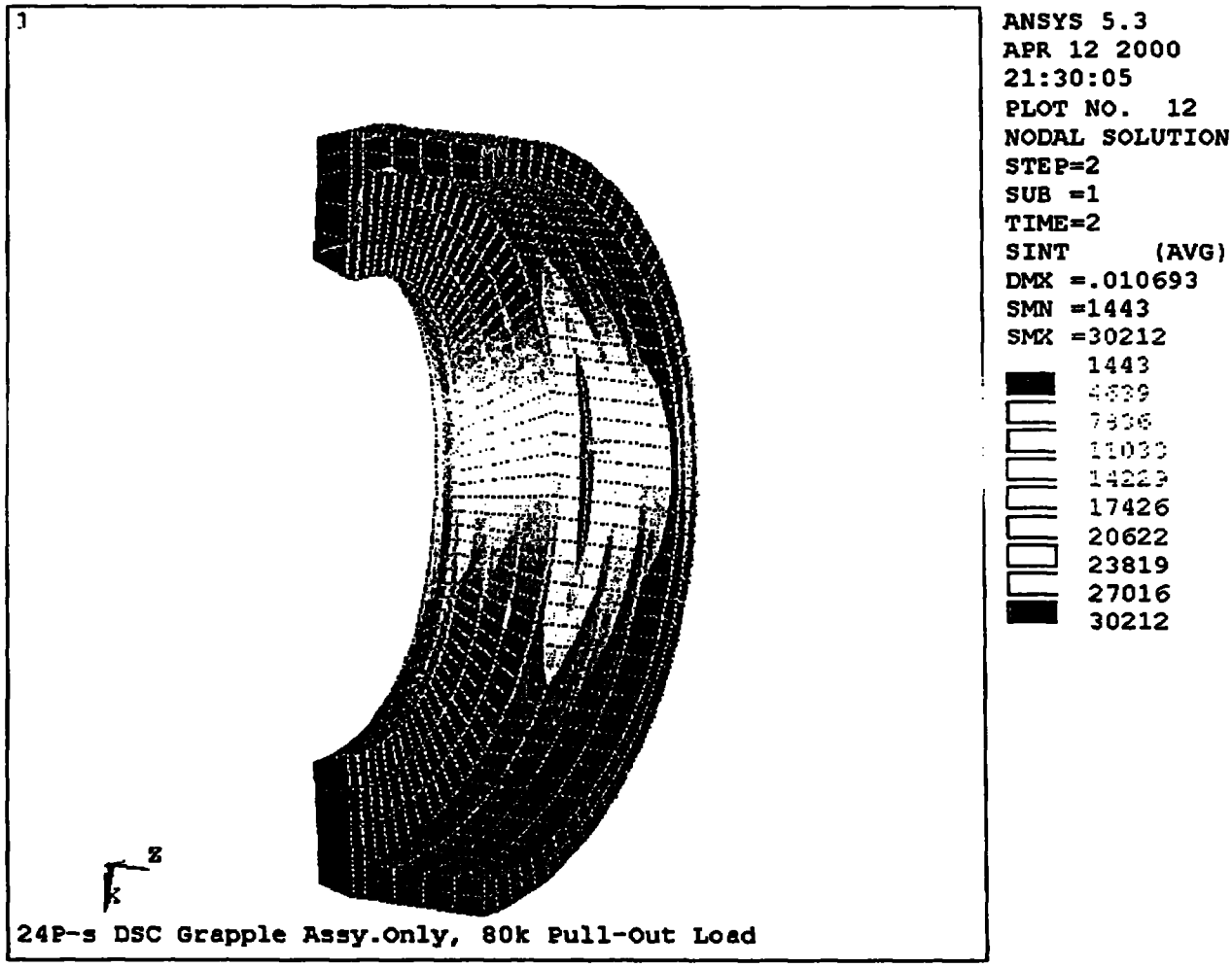

Figure B24-4

24P-FO DSC Shell Assembly, Grapple Assembly

Stress Intensity Contour

Appendix B25

ANSYS Stress Intensity Contour Plots for Run PB24PGP2

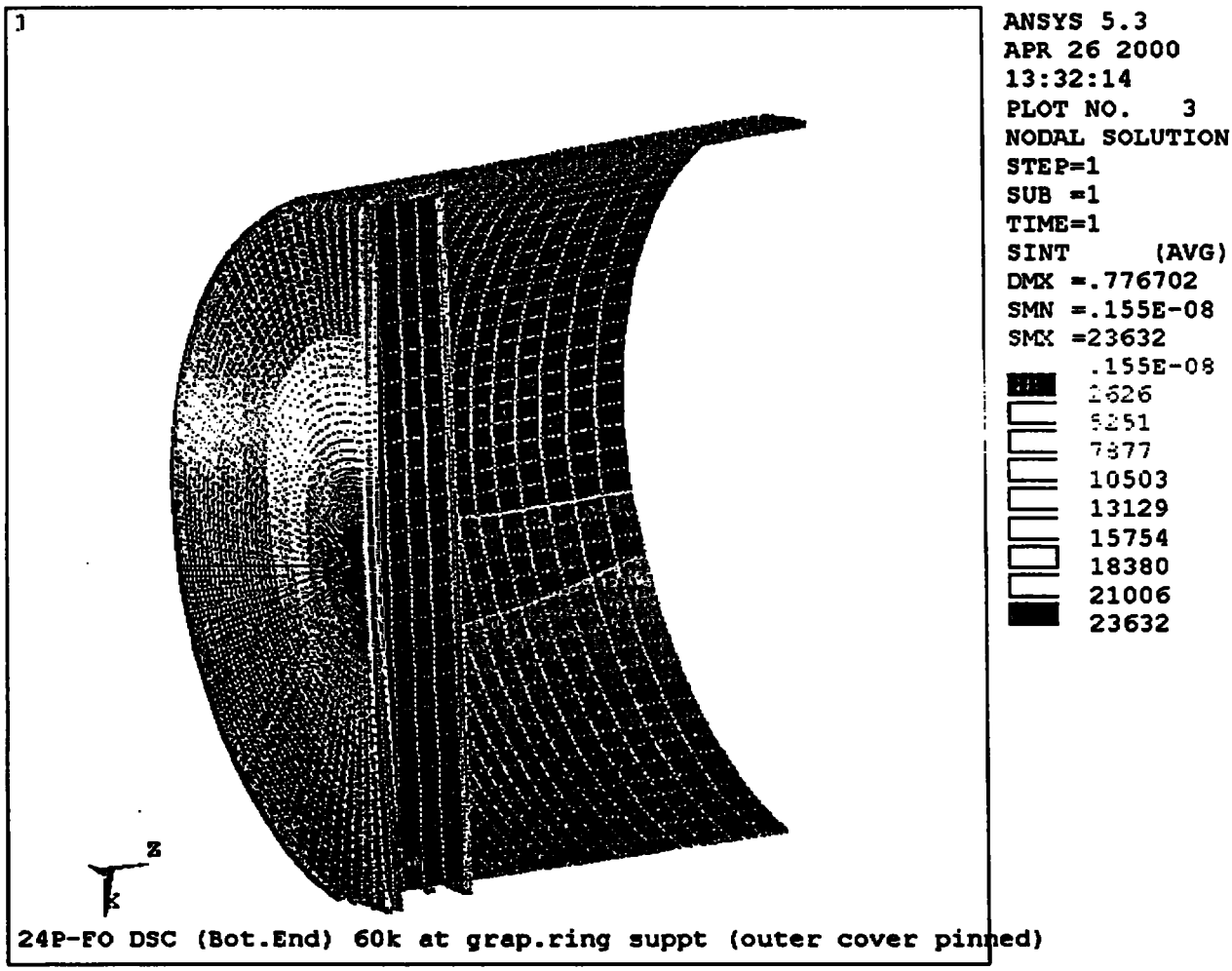

Figure B25-1

24P-FO DSC Shell Assembly, Bottom End Components

Stress Intensity Contour

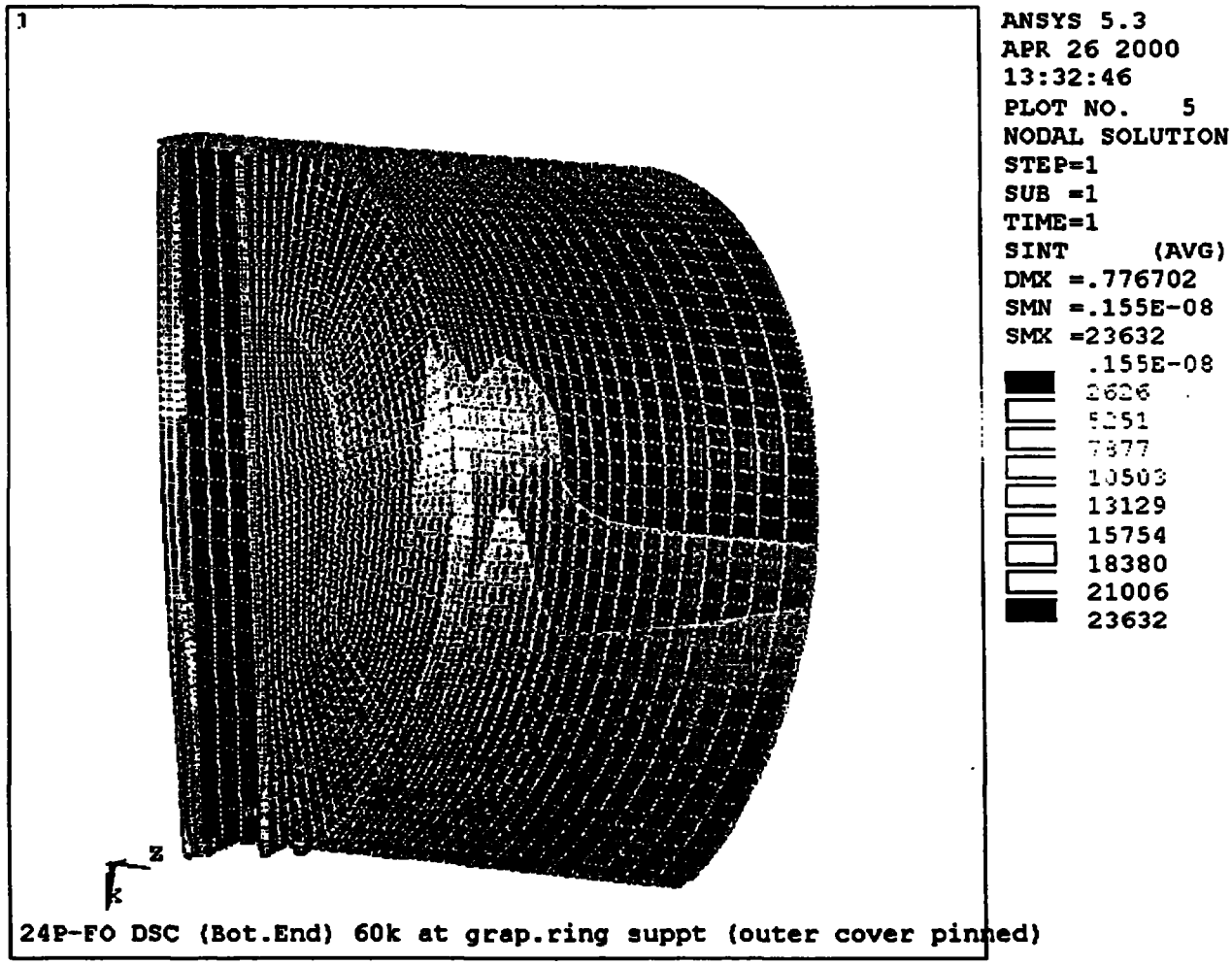

Figure B25-2

24P-FO DSC Shell Assembly, Bottom End Components

Stress Intensity Contour

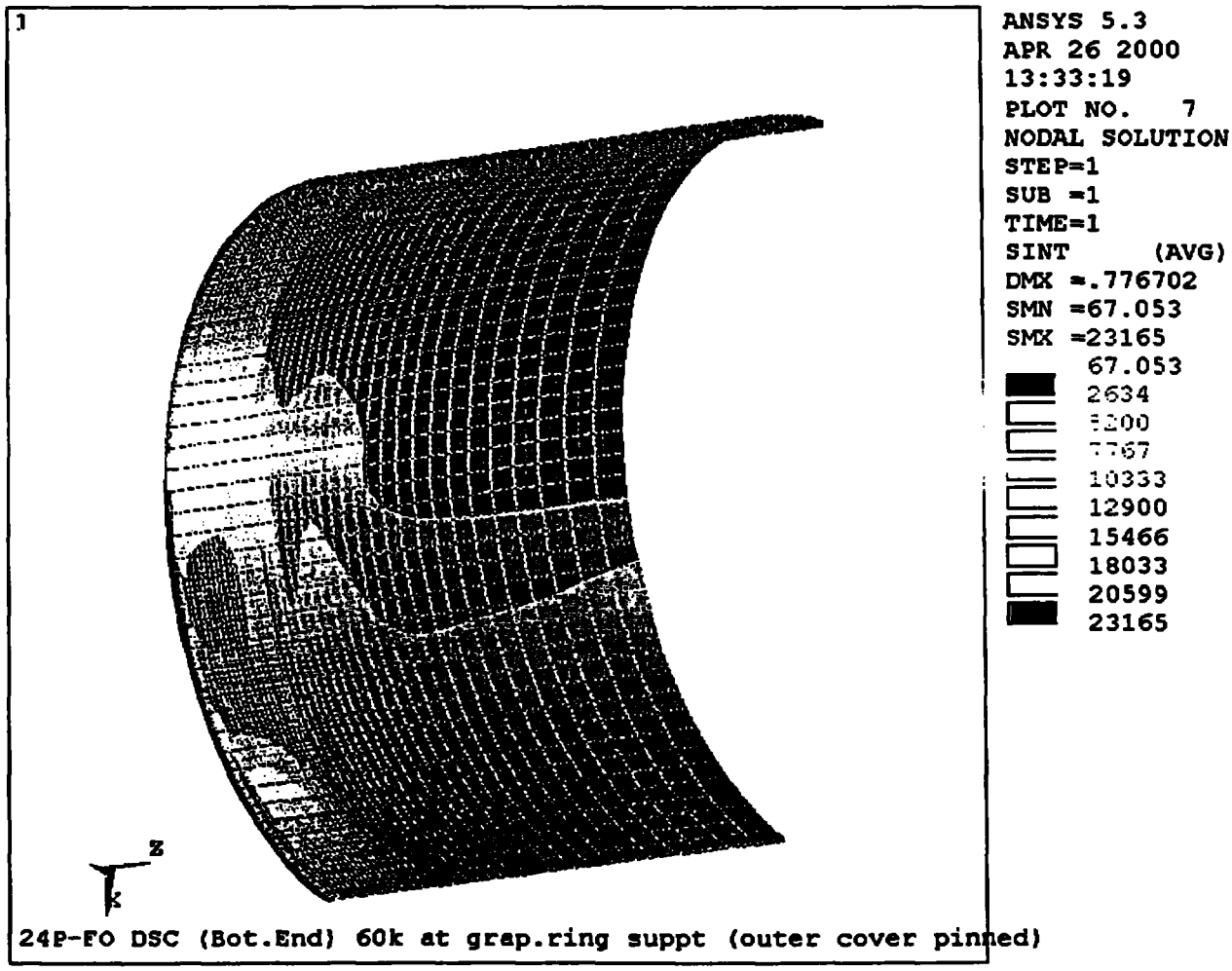

Figure B25-3

24P-FO DSC Shell Assembly, Cylindrical Shell (Bottom Half)

Stress Intensity Contour

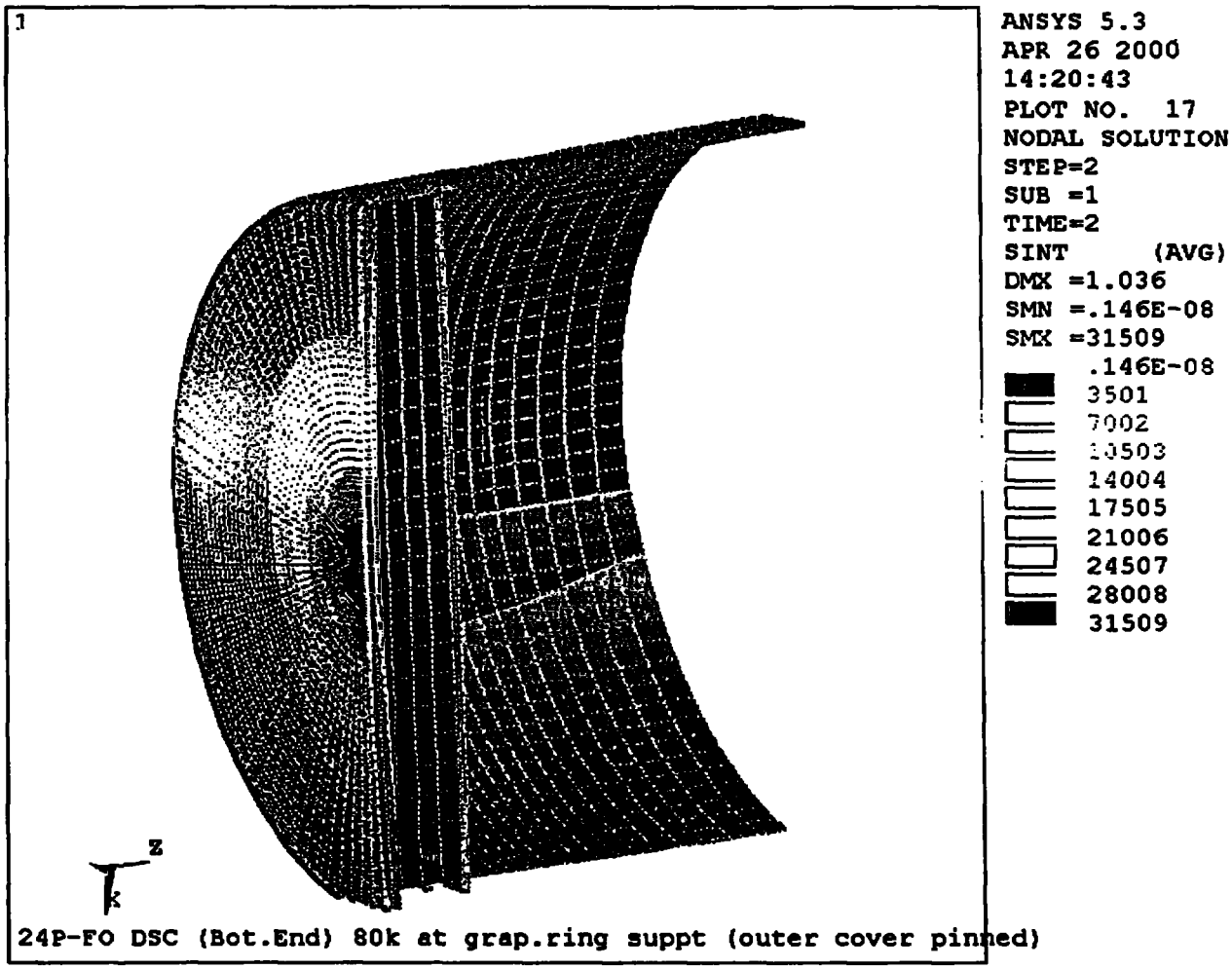

Figure B25-4

24P-FO DSC Shell Assembly, Bottom End Components

Stress Intensity Contour

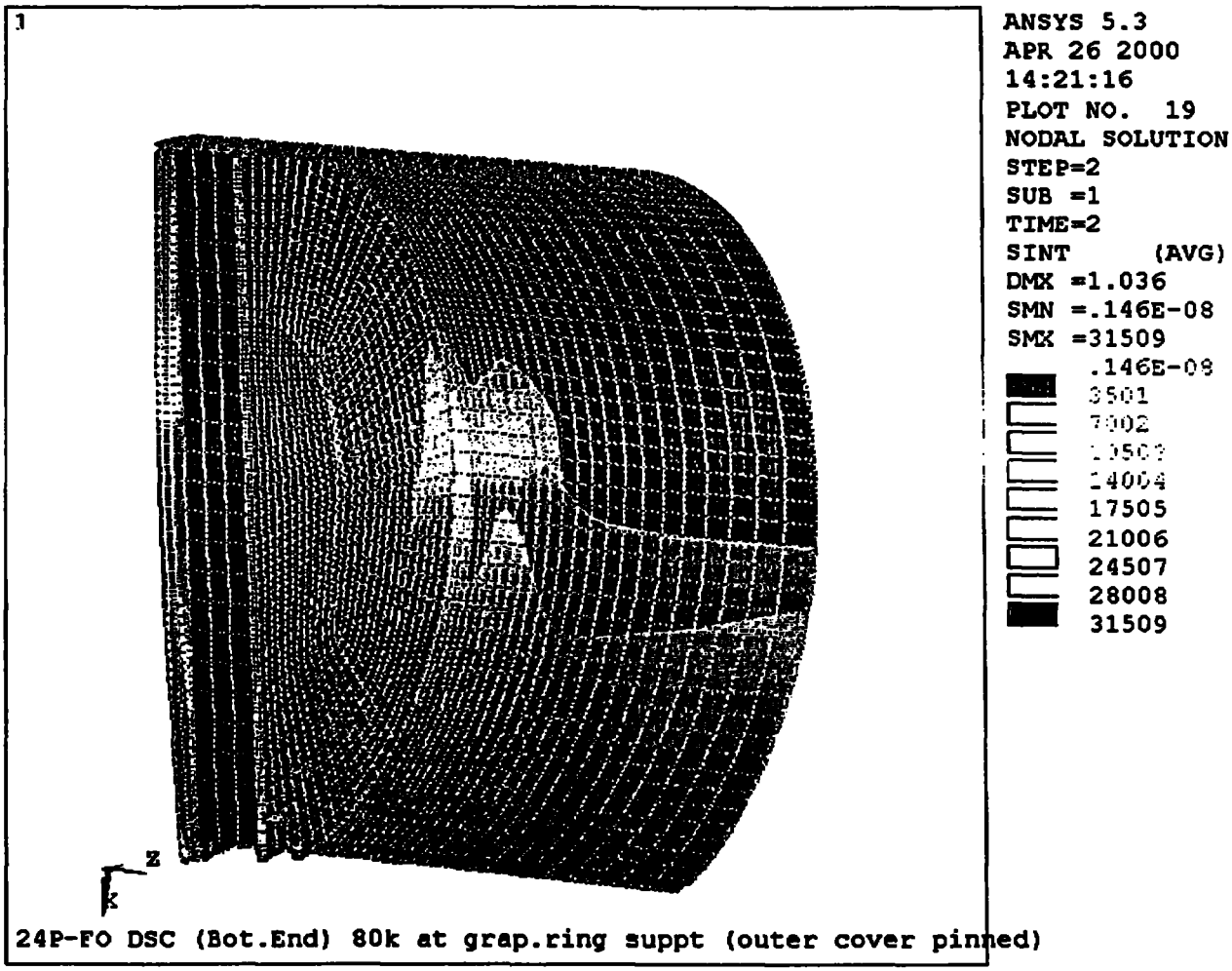

Figure B25-5

24P-FO DSC Shell Assembly, Bottom End Components

Stress Intensity Contour

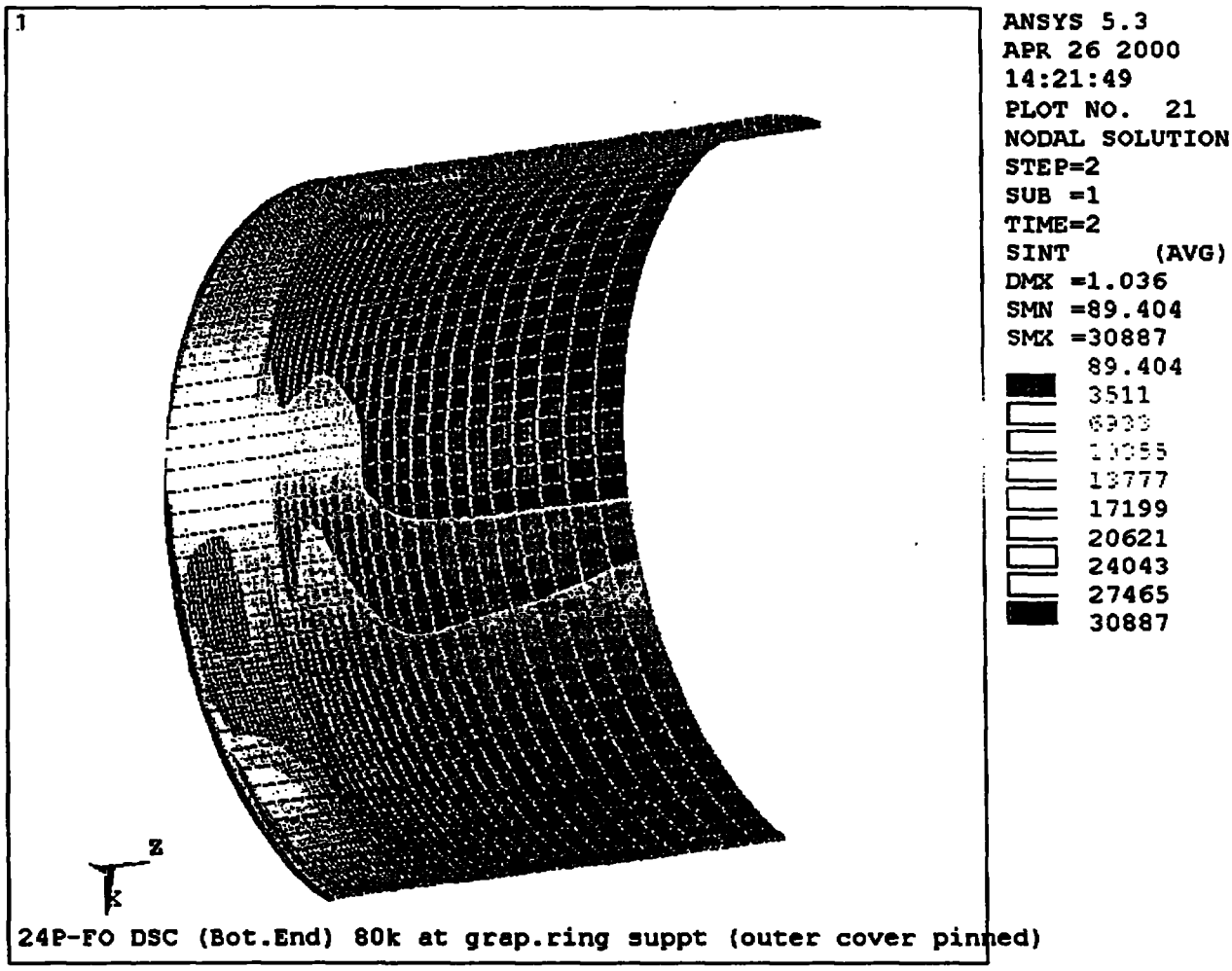

Figure B25-6

24P-FO DSC Shell Assembly, Cylindrical Shell (Bottom Half)

Stress Intensity Contour

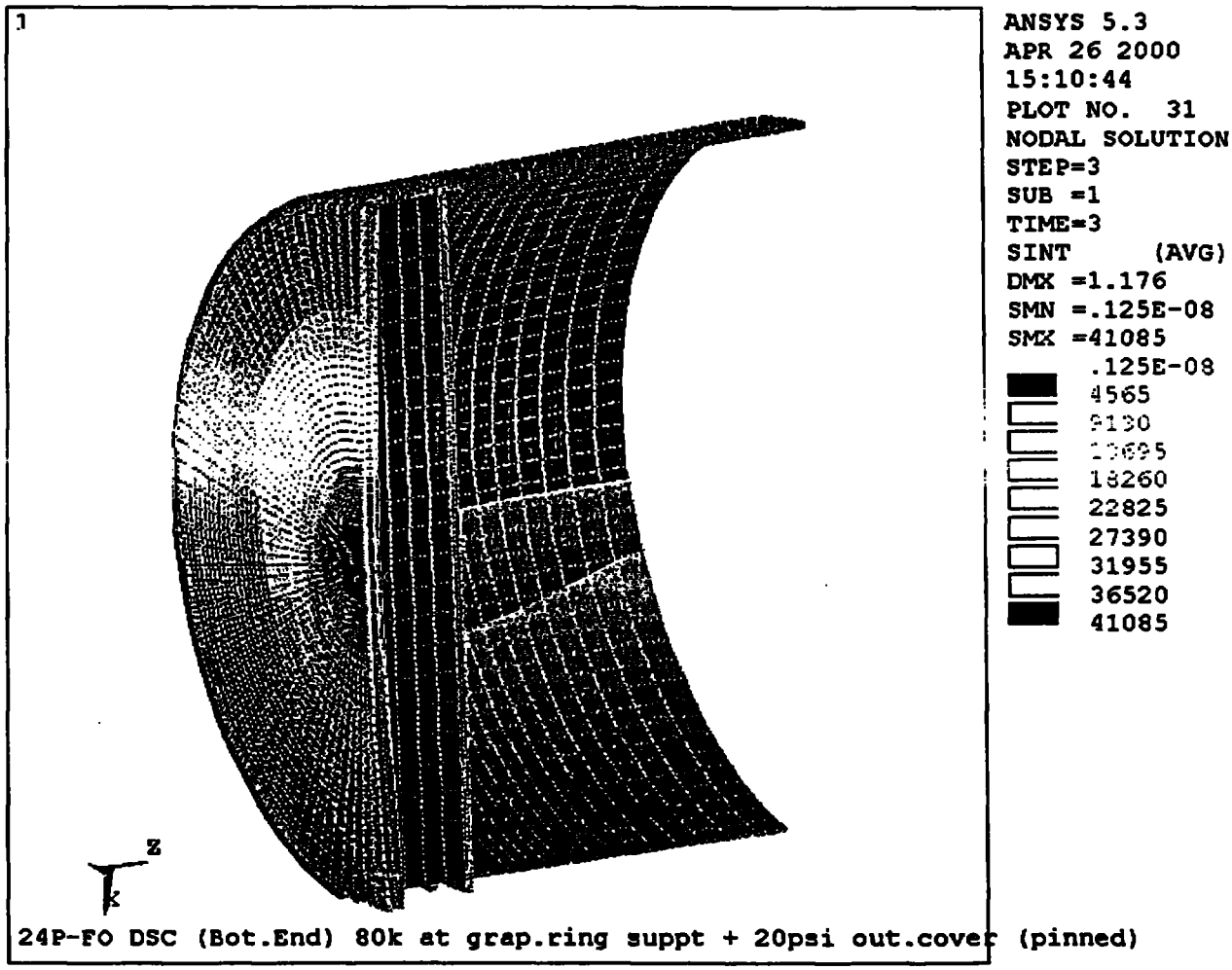

Figure B25-7

24P-FO DSC Shell Assembly, Bottom End Components

Stress Intensity Contour

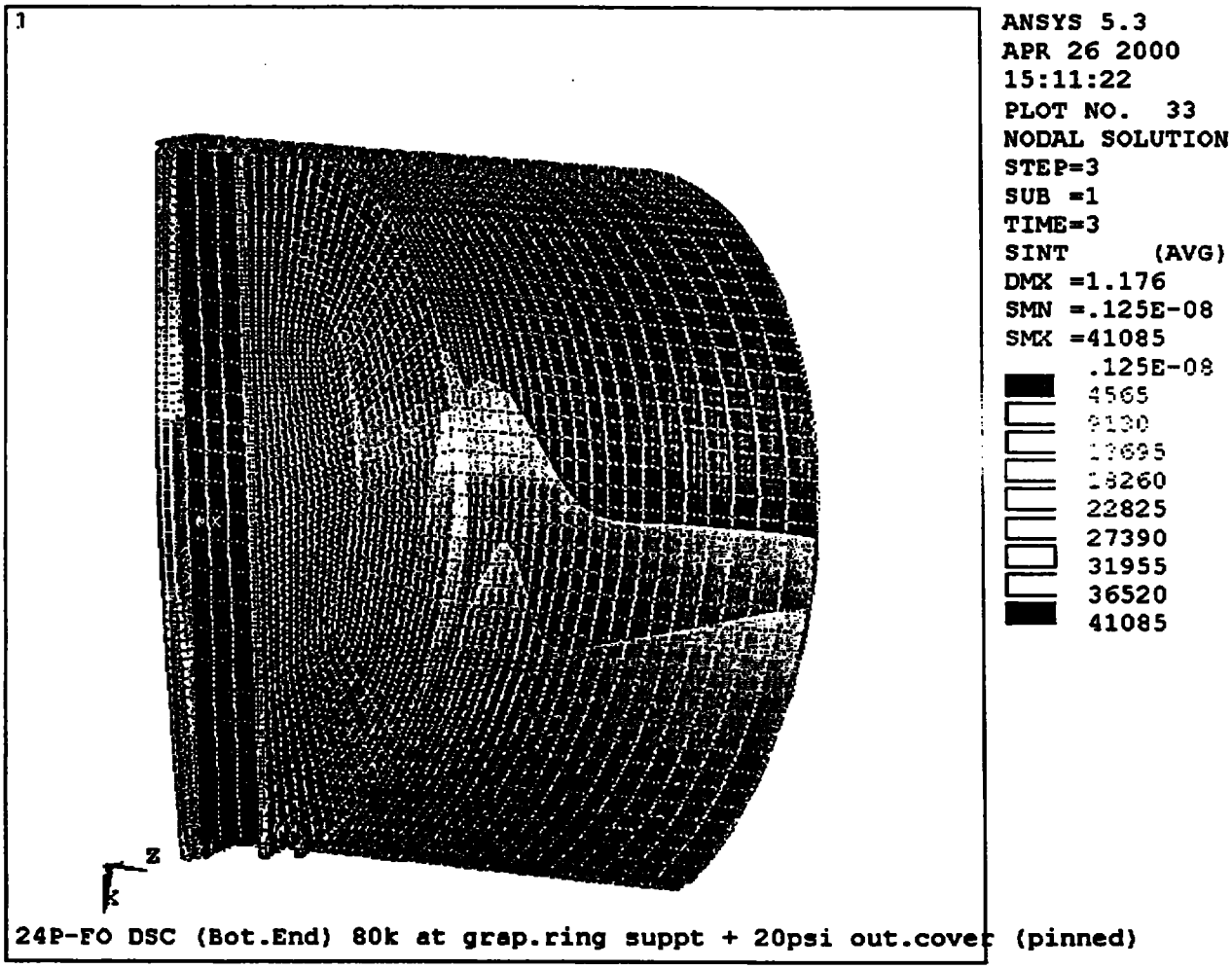

Figure B25-8

24P-FO DSC Shell Assembly, Bottom End Components

Stress Intensity Contour

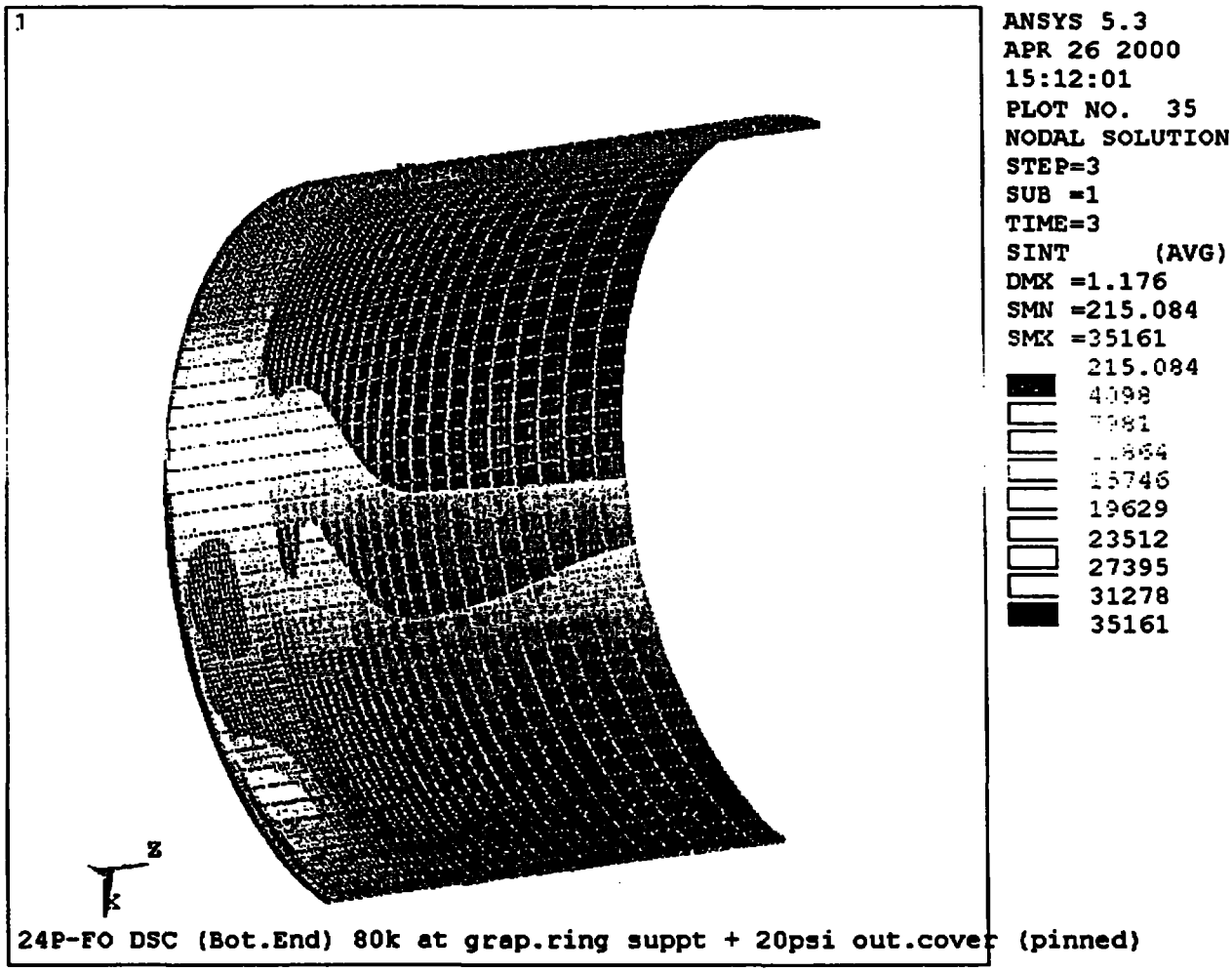

Figure B25-9

24P-FO DSC Shell Assembly, Cylindrical Shell (Bottom Half)

Stress Intensity Contour

Appendix B26

ANSYS Stress Intensity Contour Plots for Run PB24PGP3

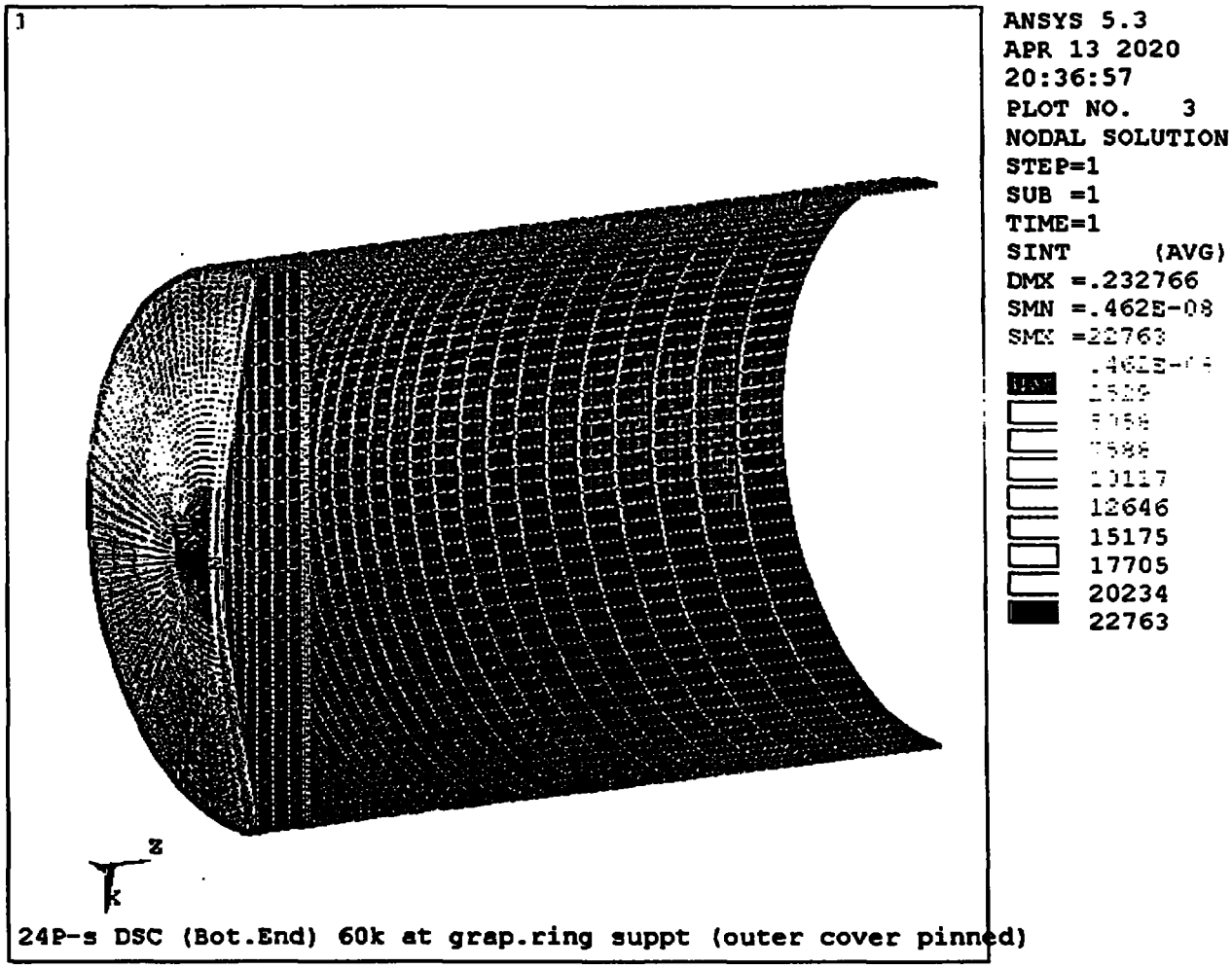

Figure B26-1

24P-FO DSC Shell Assembly, Bottom End Components

Stress Intensity Contour

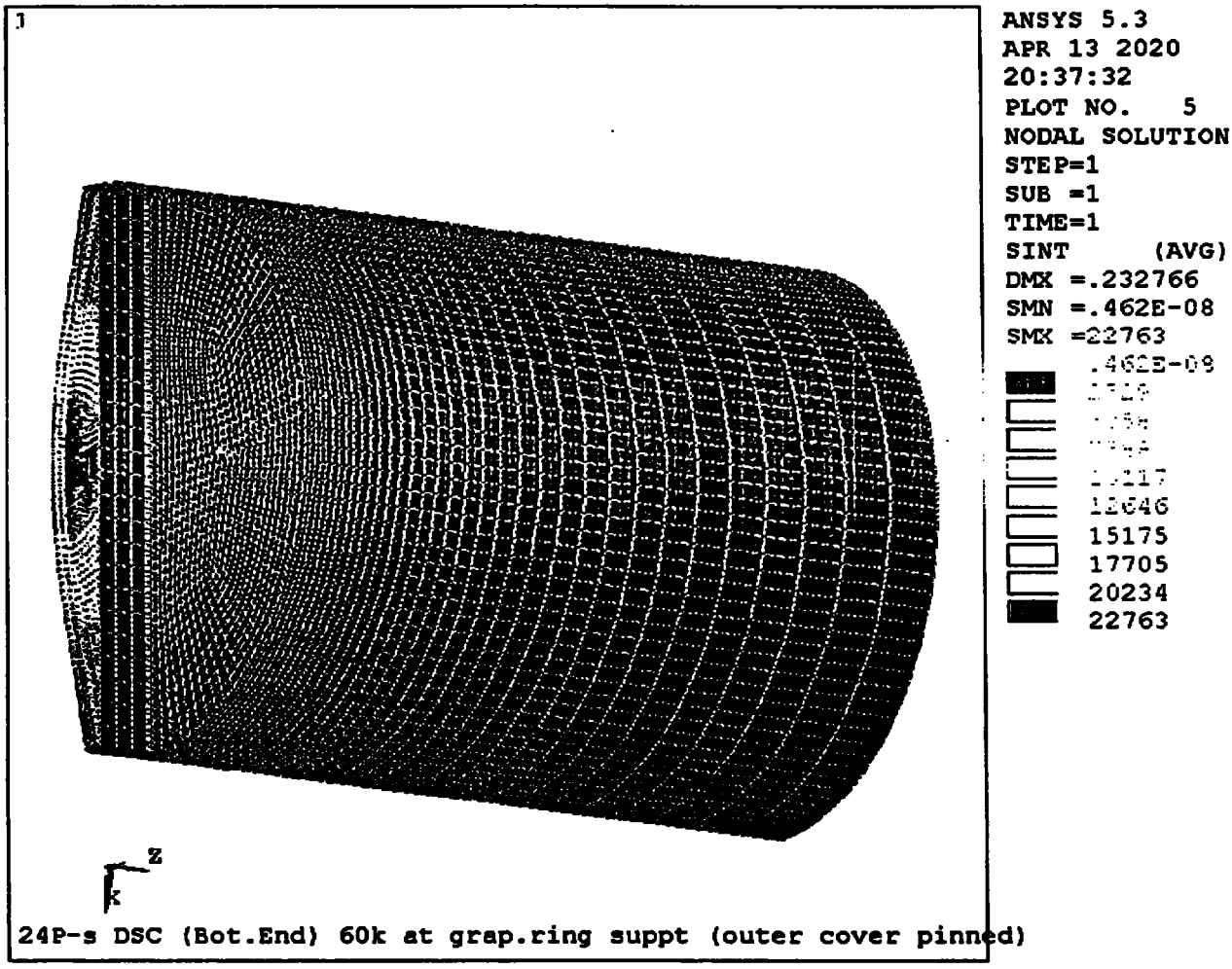

Figure B26-2

24P-FO DSC Shell Assembly, Bottom End Components

Stress Intensity Contour

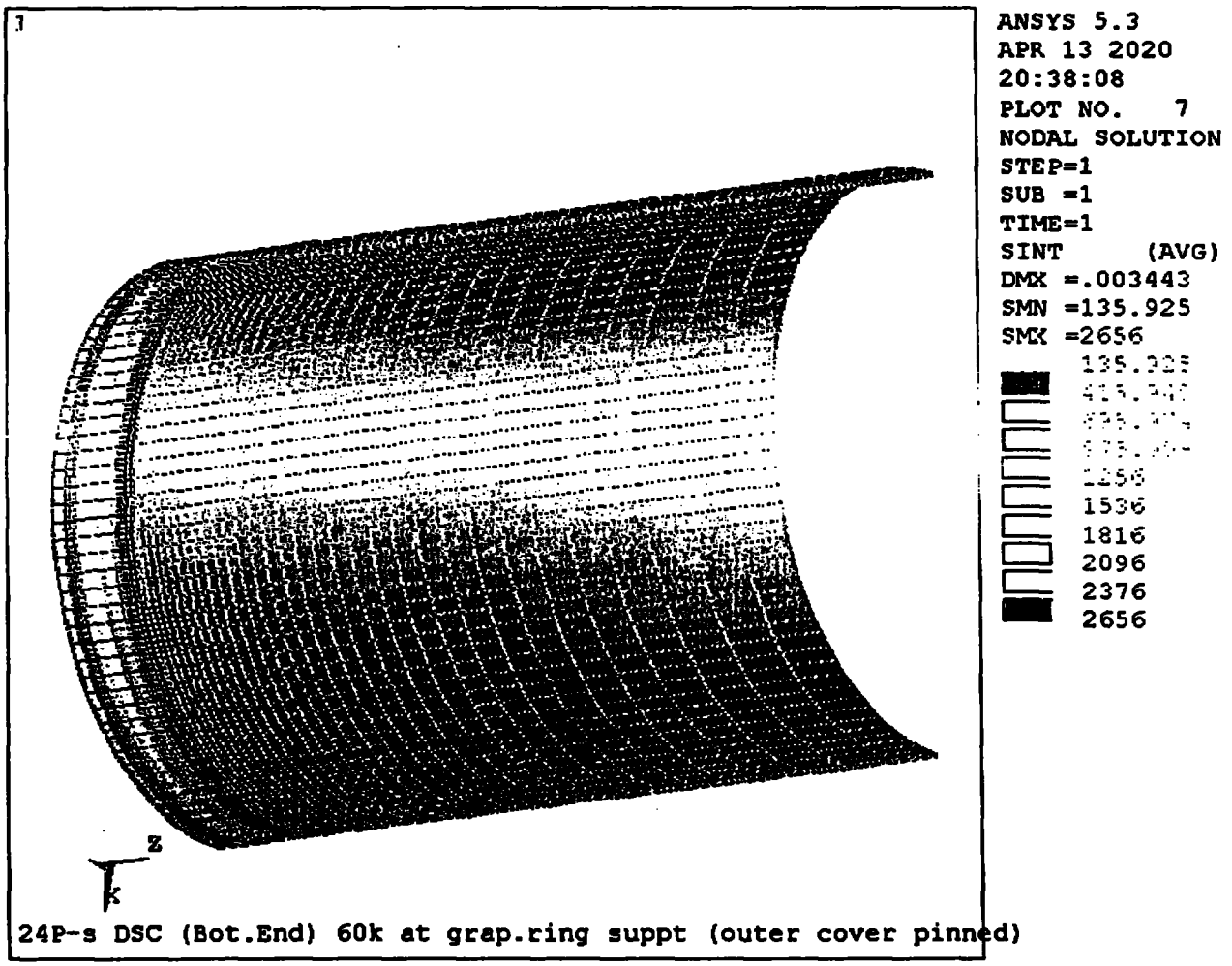

Figure B26-3

24P-FO DSC Shell Assembly, Cylindrical Shell (Bottom Half)

Stress Intensity Contour

Appendix B27

ANSYS Stress Intensity Contour Plots for Run PB24PTHG

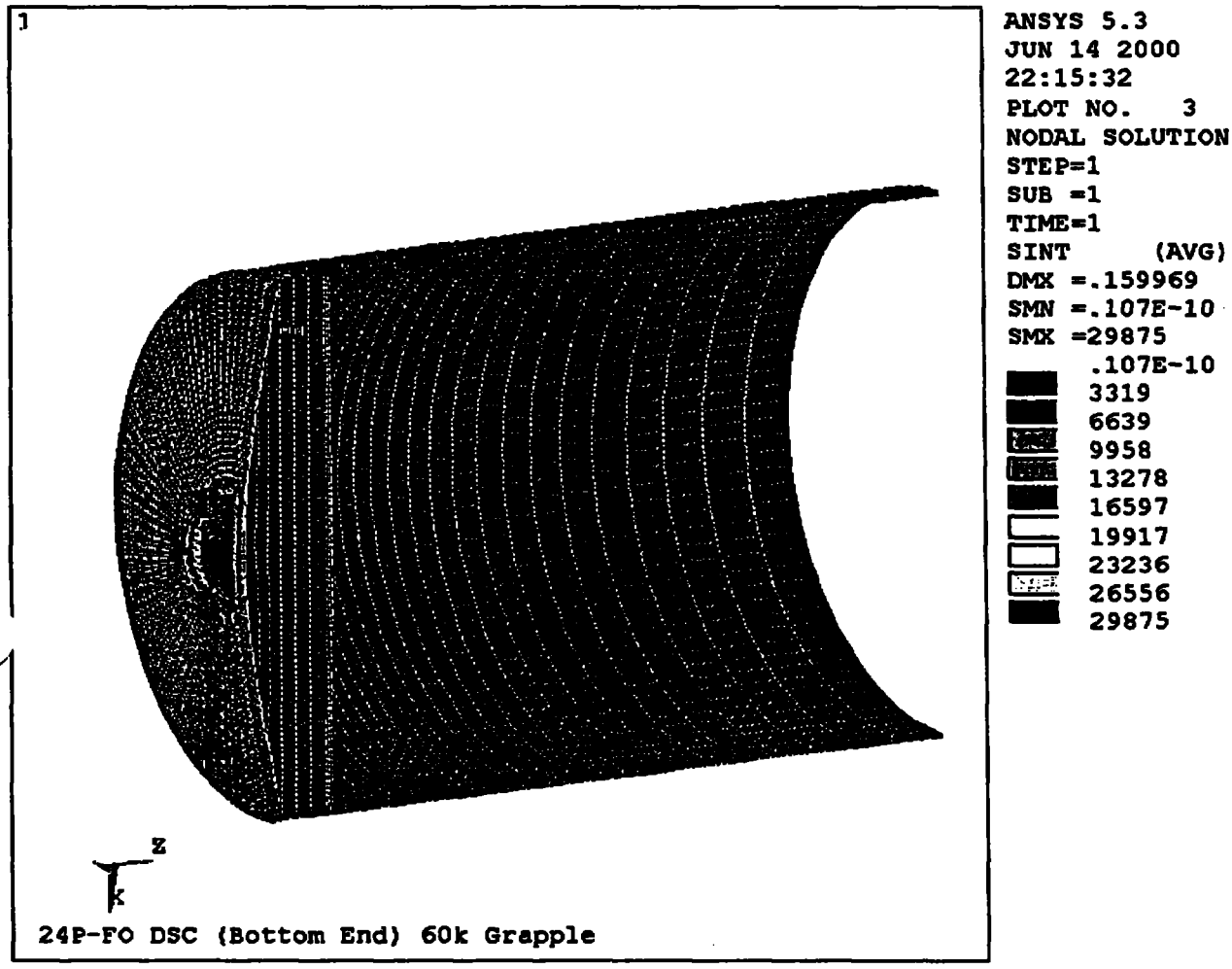

Figure B27-1

24P-FO DSC Shell Assembly, Bottom End Components

Stress Intensity Contour

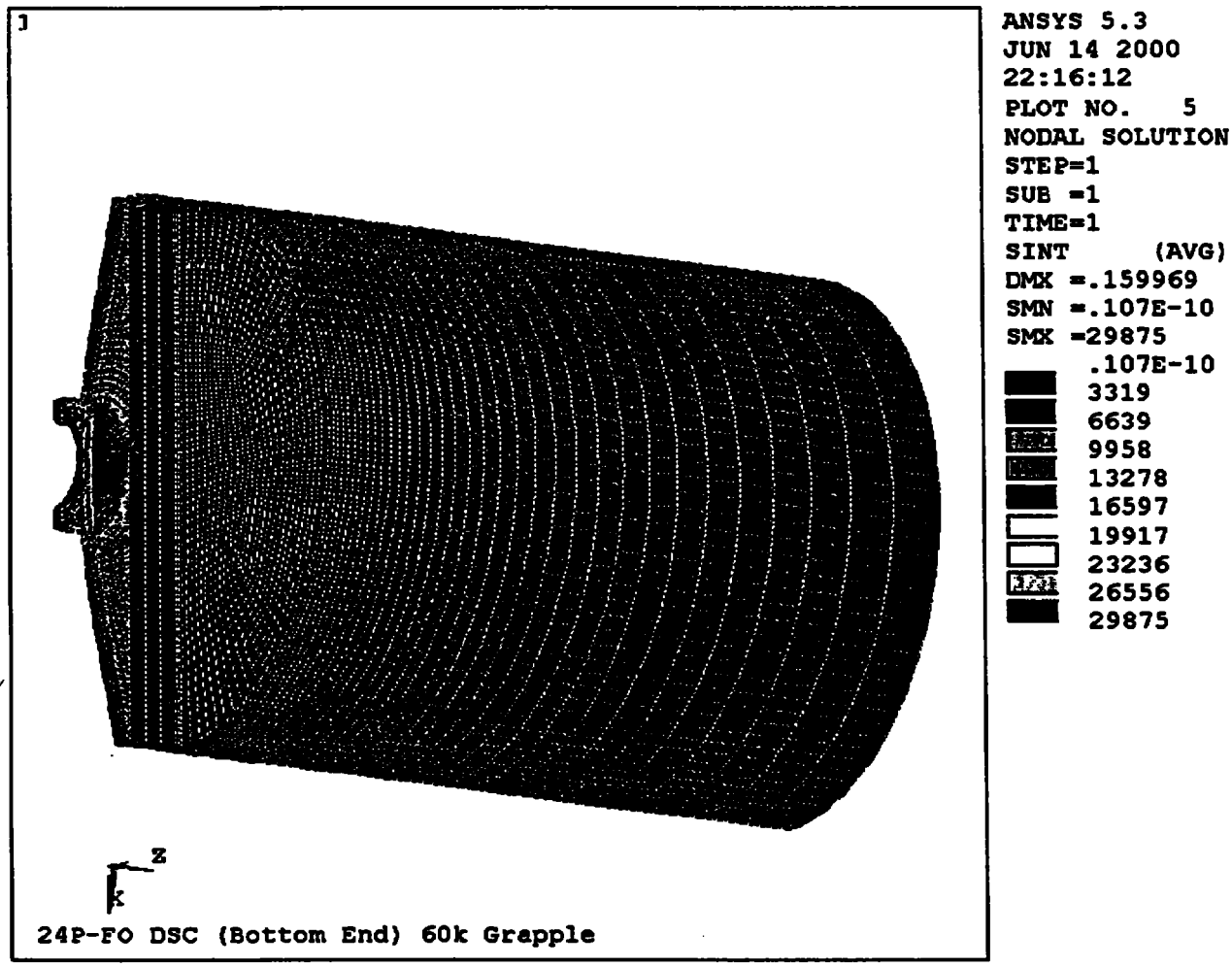

Figure B27-2

24P-FO DSC Shell Assembly, Bottom End Components

Stress Intensity Contour

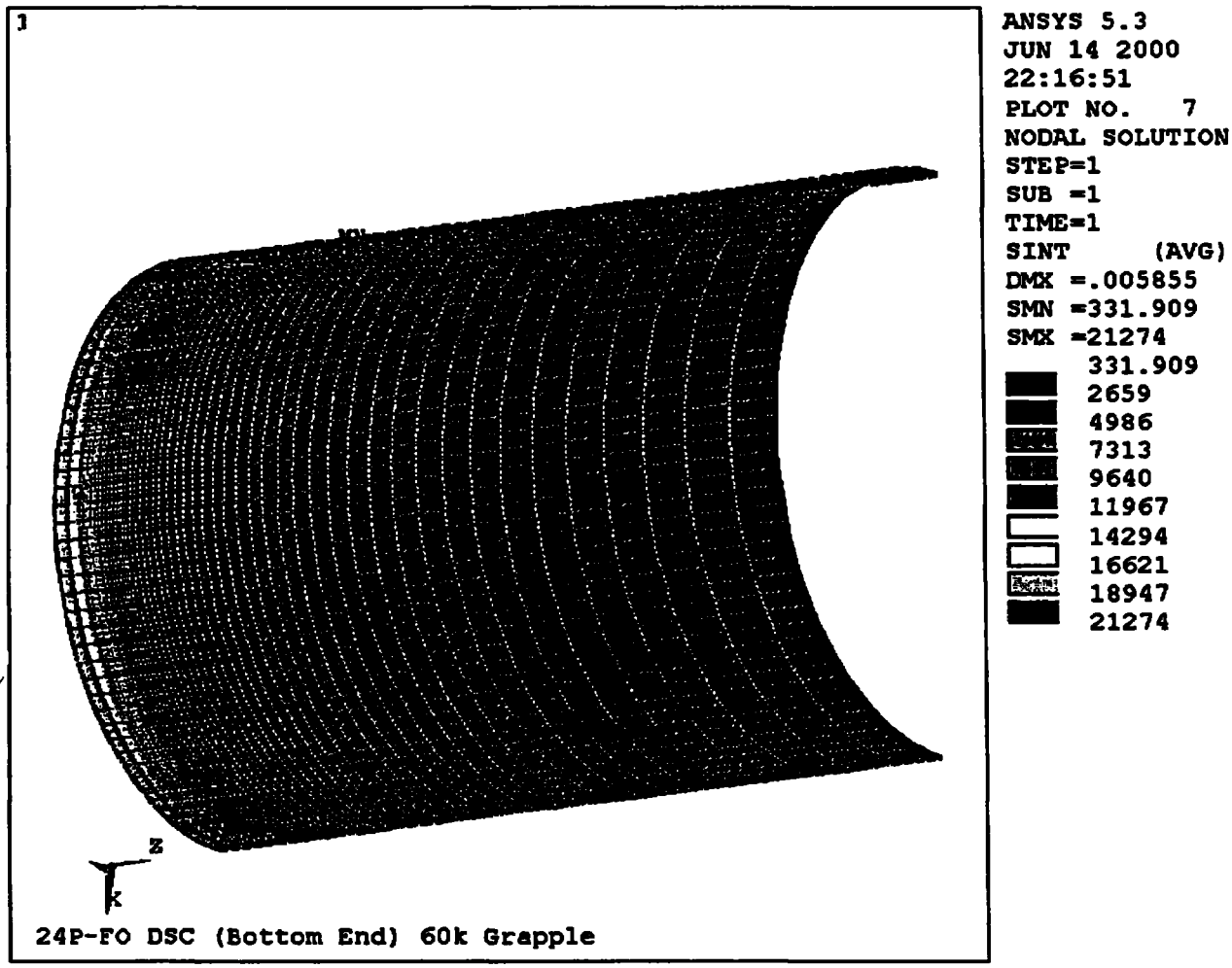

Figure B27-3

24P-FO DSC Shell Assembly, Cylindrical Shell (Bottom Half)

Stress Intensity Contour

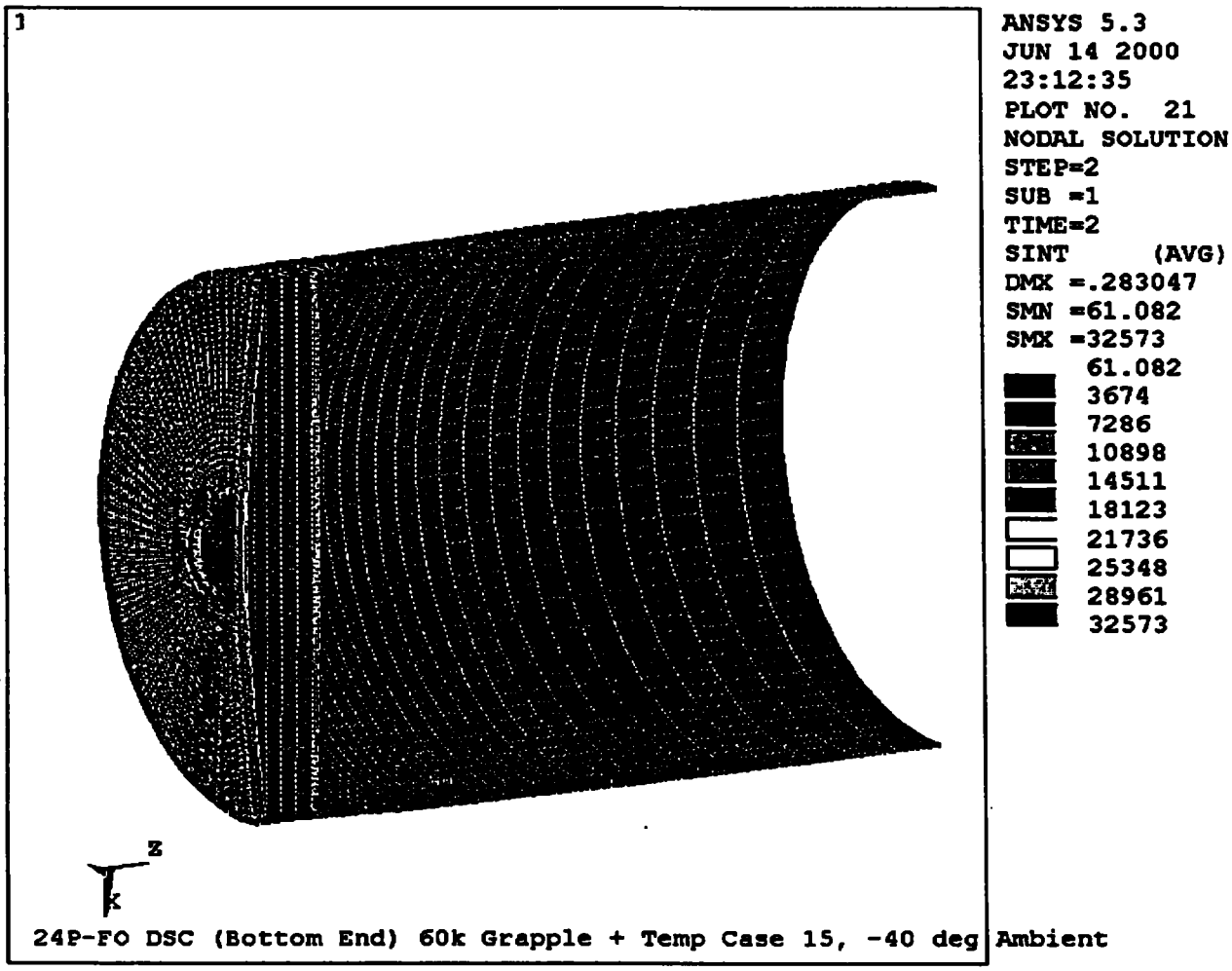

Figure B27-4

24P-FO DSC Shell Assembly, Bottom End Components

Stress Intensity Contour

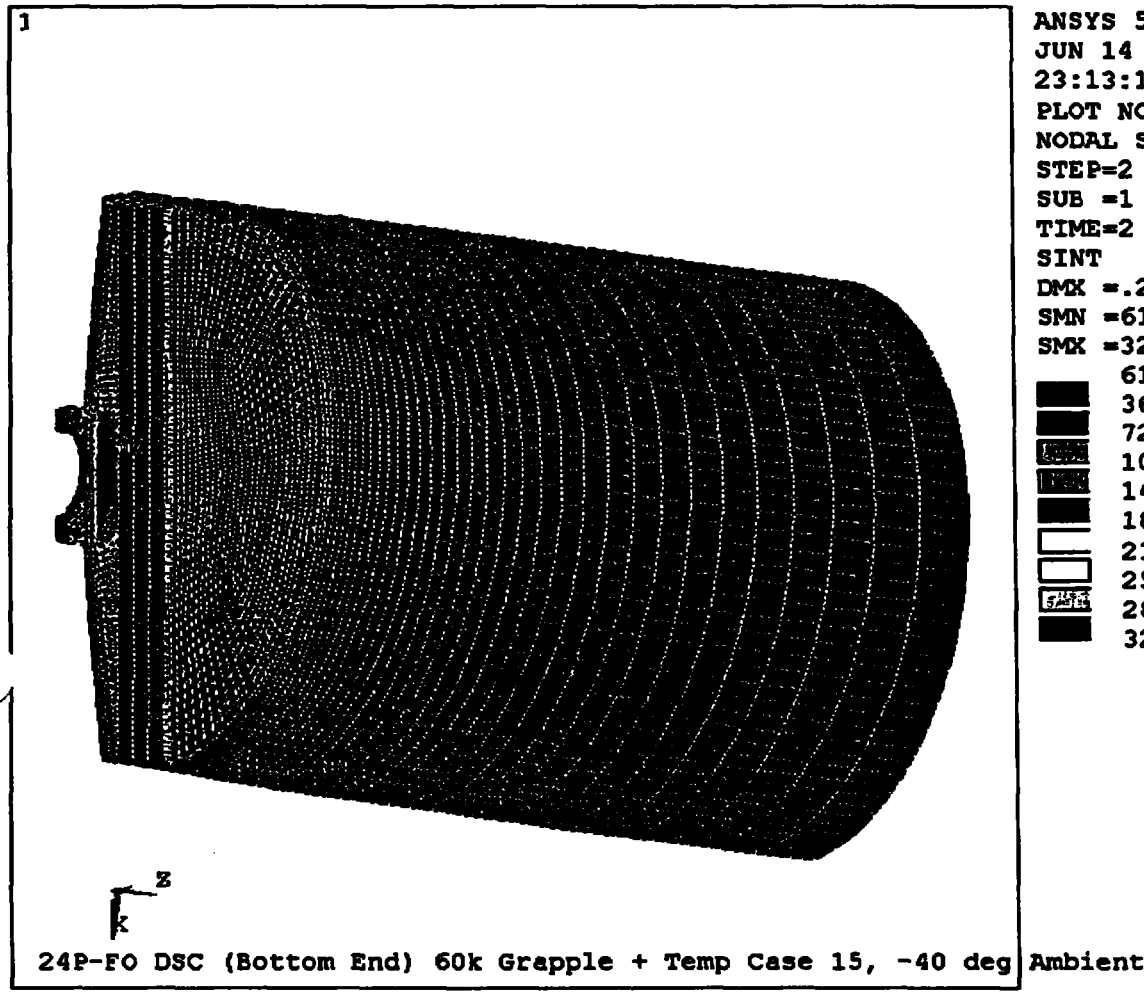

Figure B27-5

24P-FO DSC Shell Assembly, Bottom End Components

Stress Intensity Contour

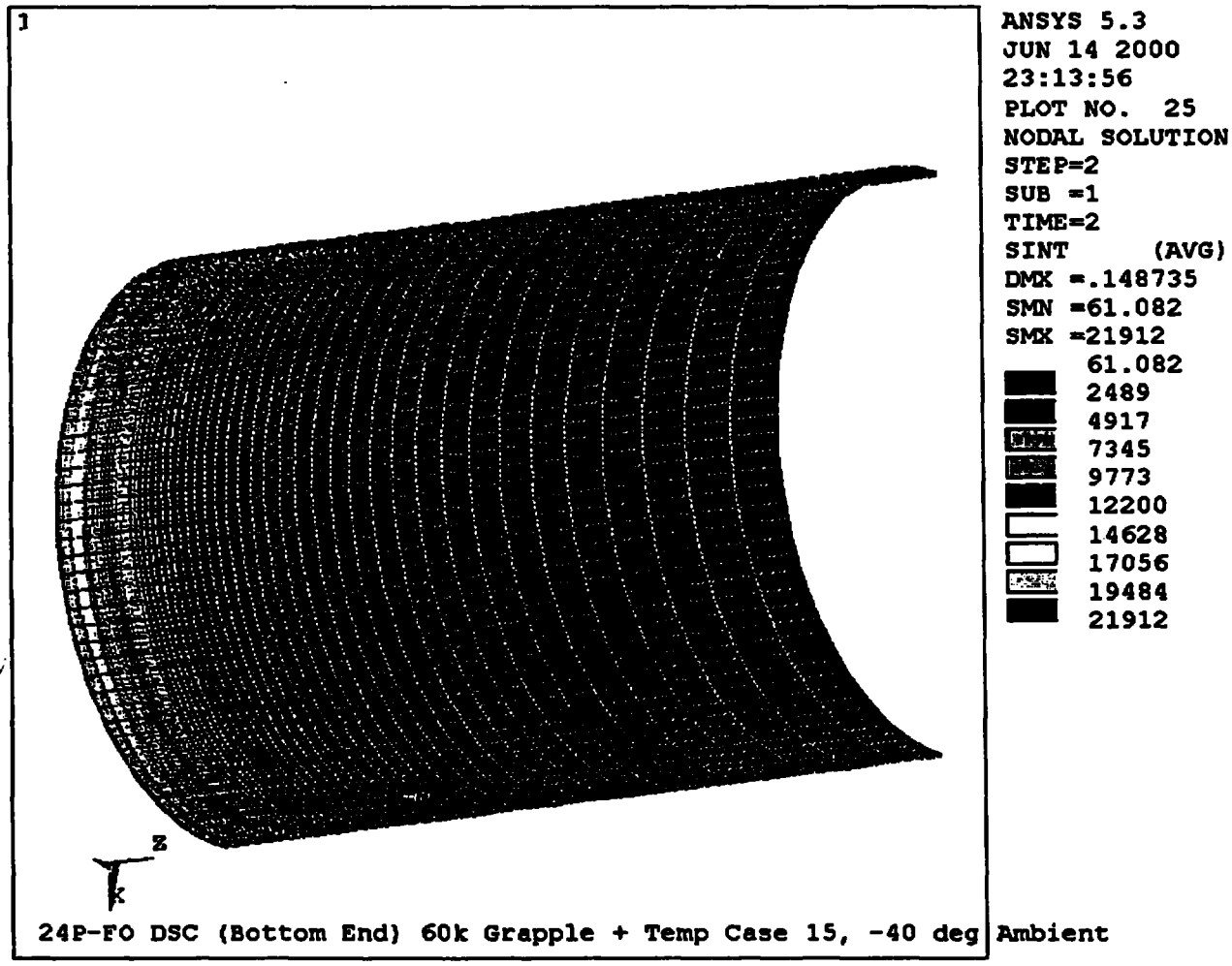

Figure B27-6

24P-FO DSC Shell Assembly, Cylindrical Shell (Bottom Half)

Stress Intensity Contour

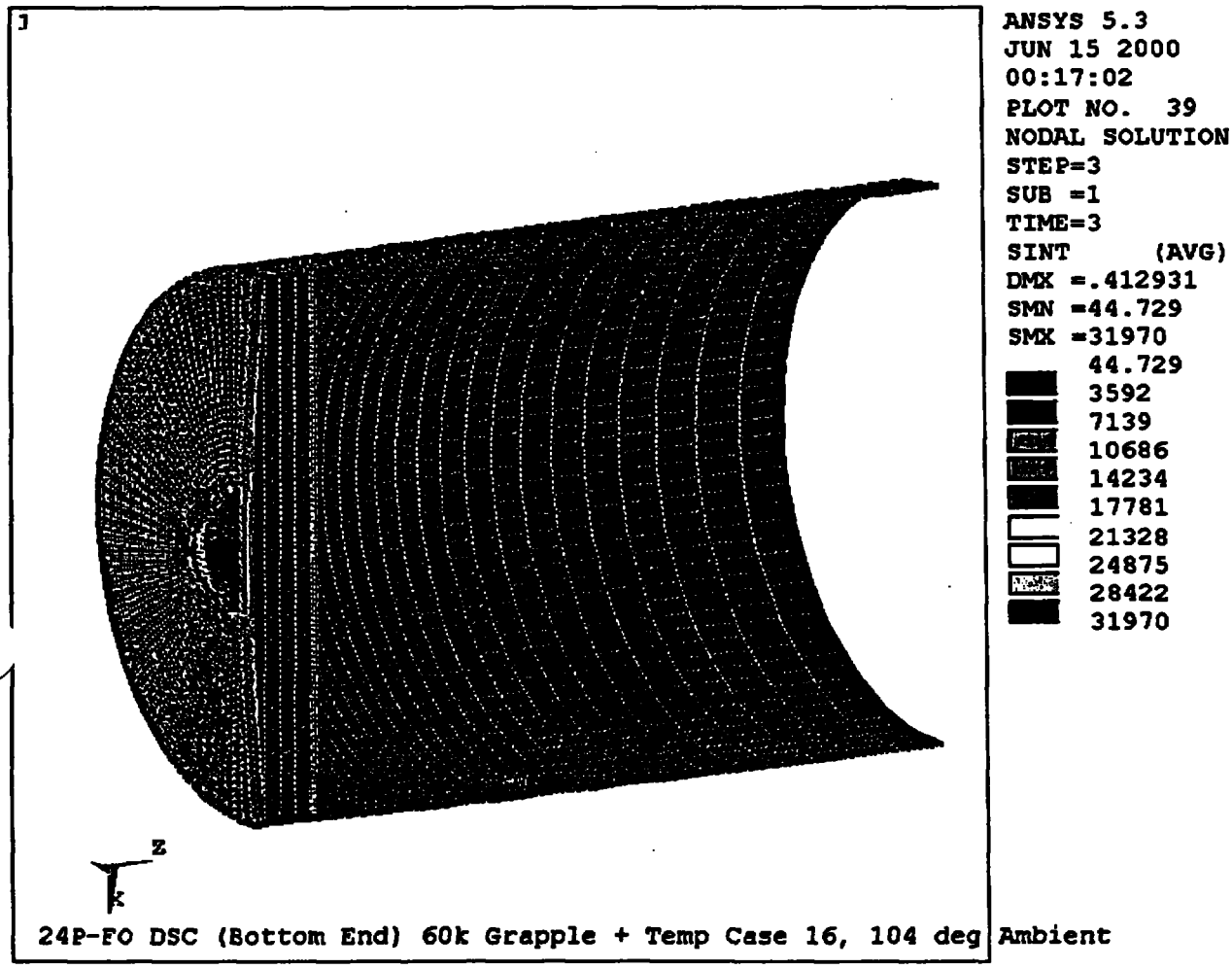

Figure B27-7

24P-FO DSC Shell Assembly, Bottom End Components

Stress Intensity Contour

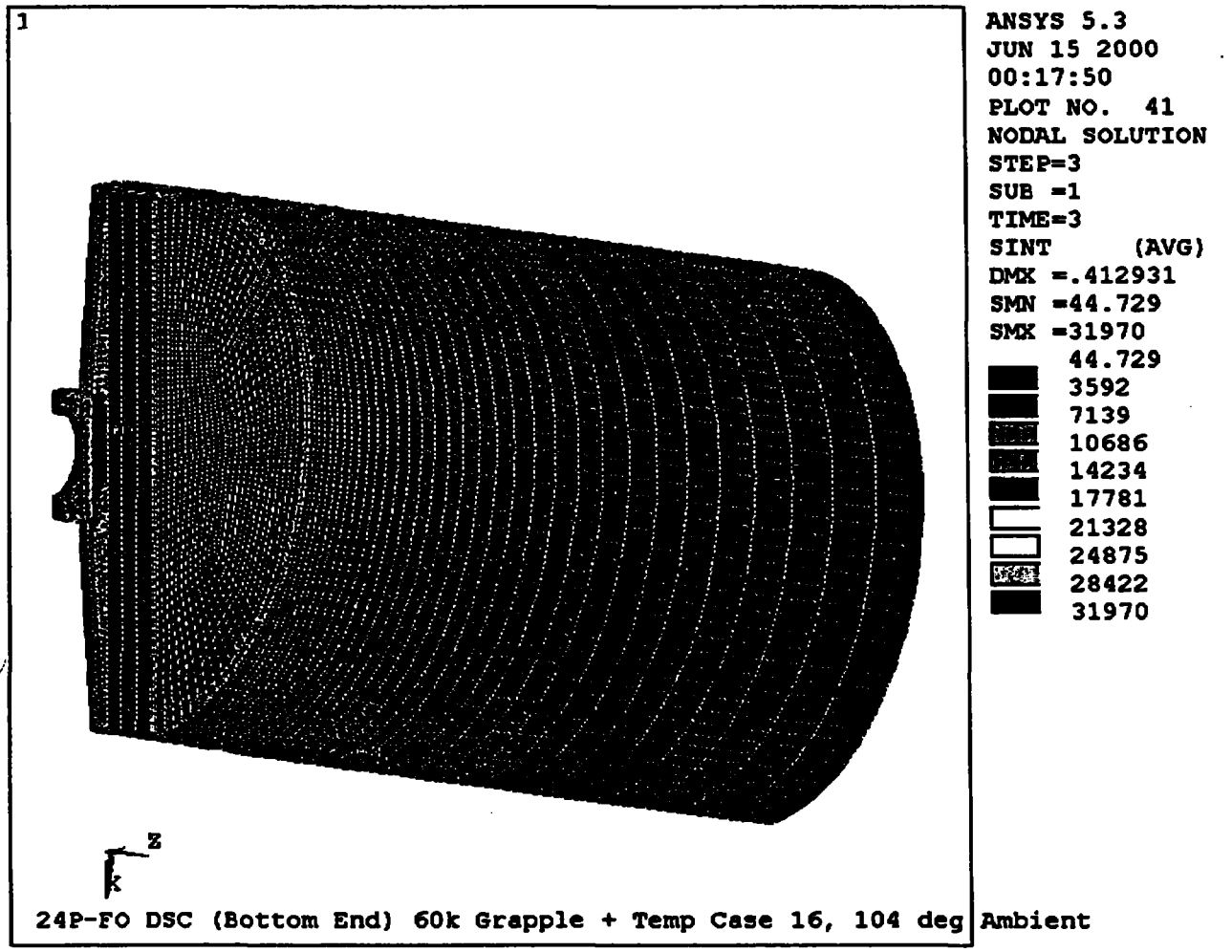

Figure B27-8

24P-FO DSC Shell Assembly, Bottom End Components

Stress Intensity Contour

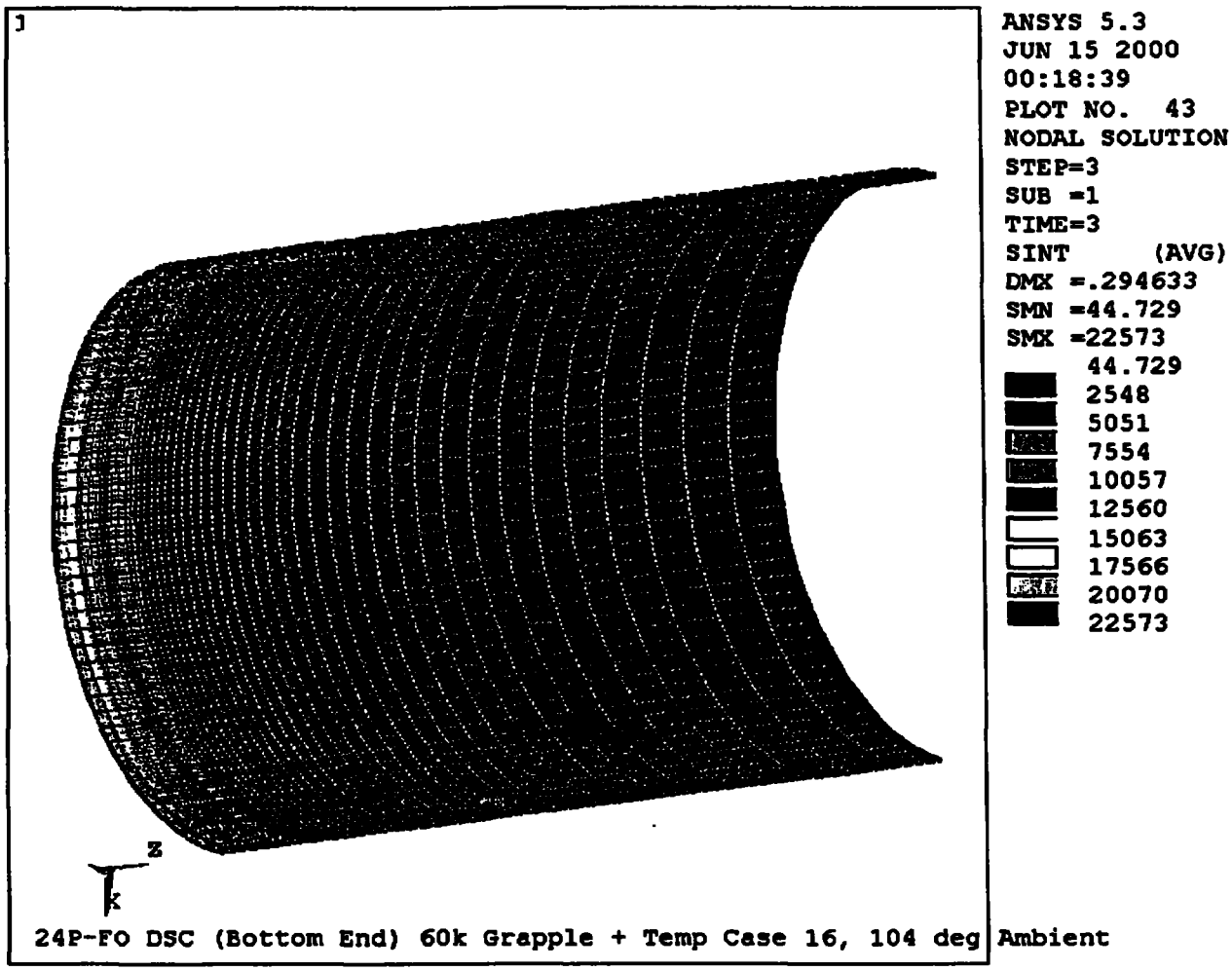

Figure B27-9

24P-FO DSC Shell Assembly, Cylindrical Shell (Bottom Half)

Stress Intensity Contour

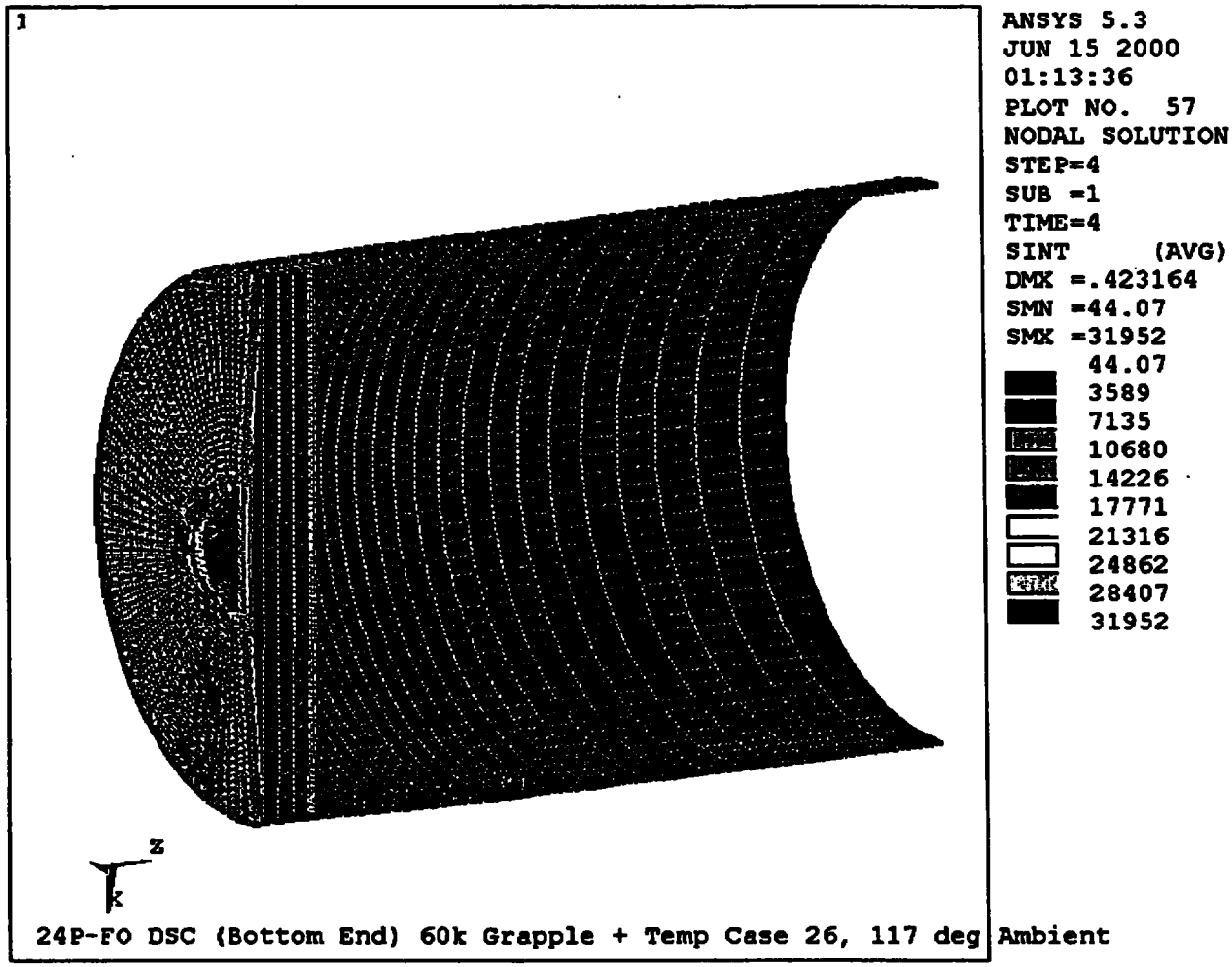

Figure B27-10

24P-FO DSC Shell Assembly, Bottom End Components

Stress Intensity Contour

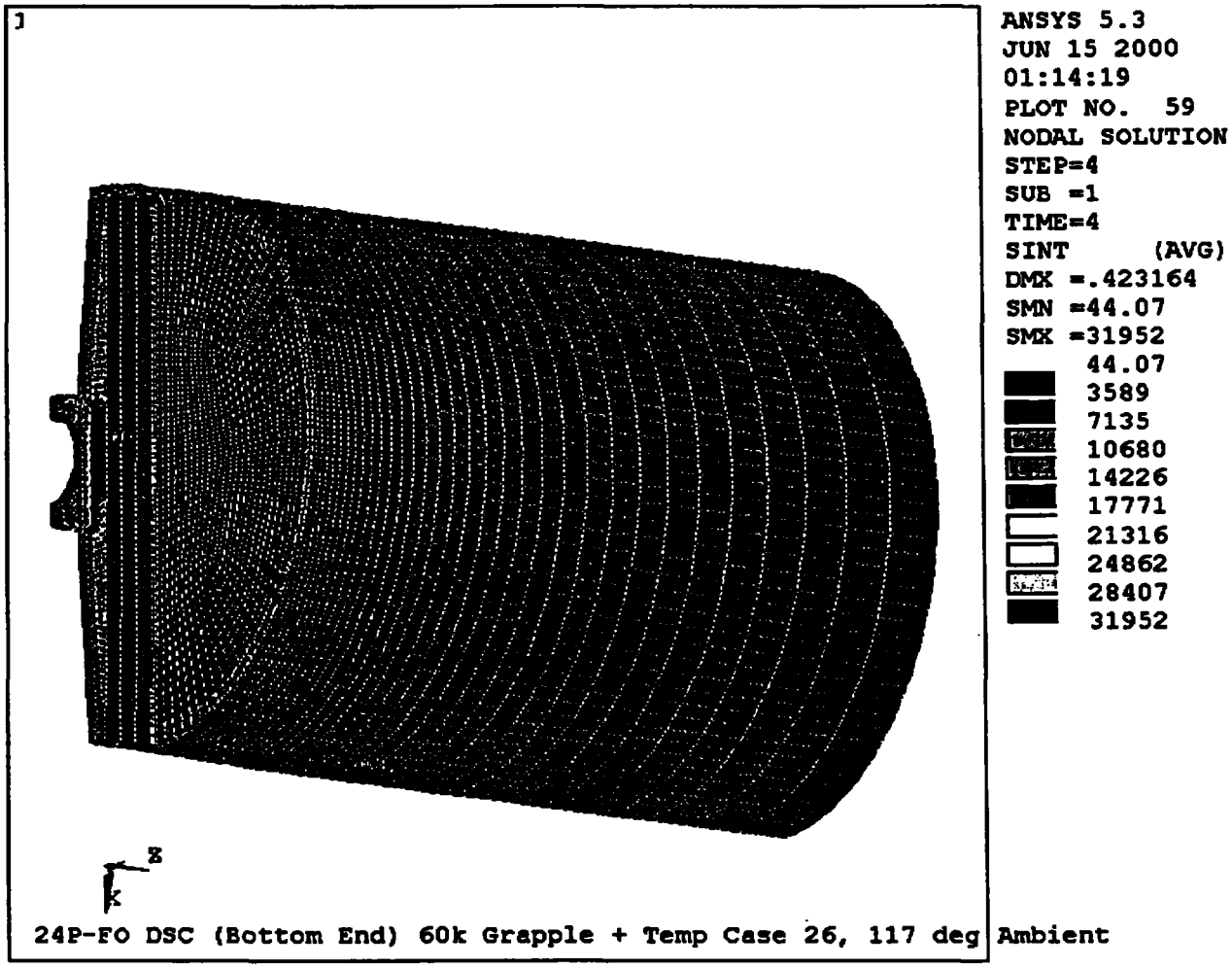

Figure B27-11

24P-FO DSC Shell Assembly, Bottom End Components

Stress Intensity Contour

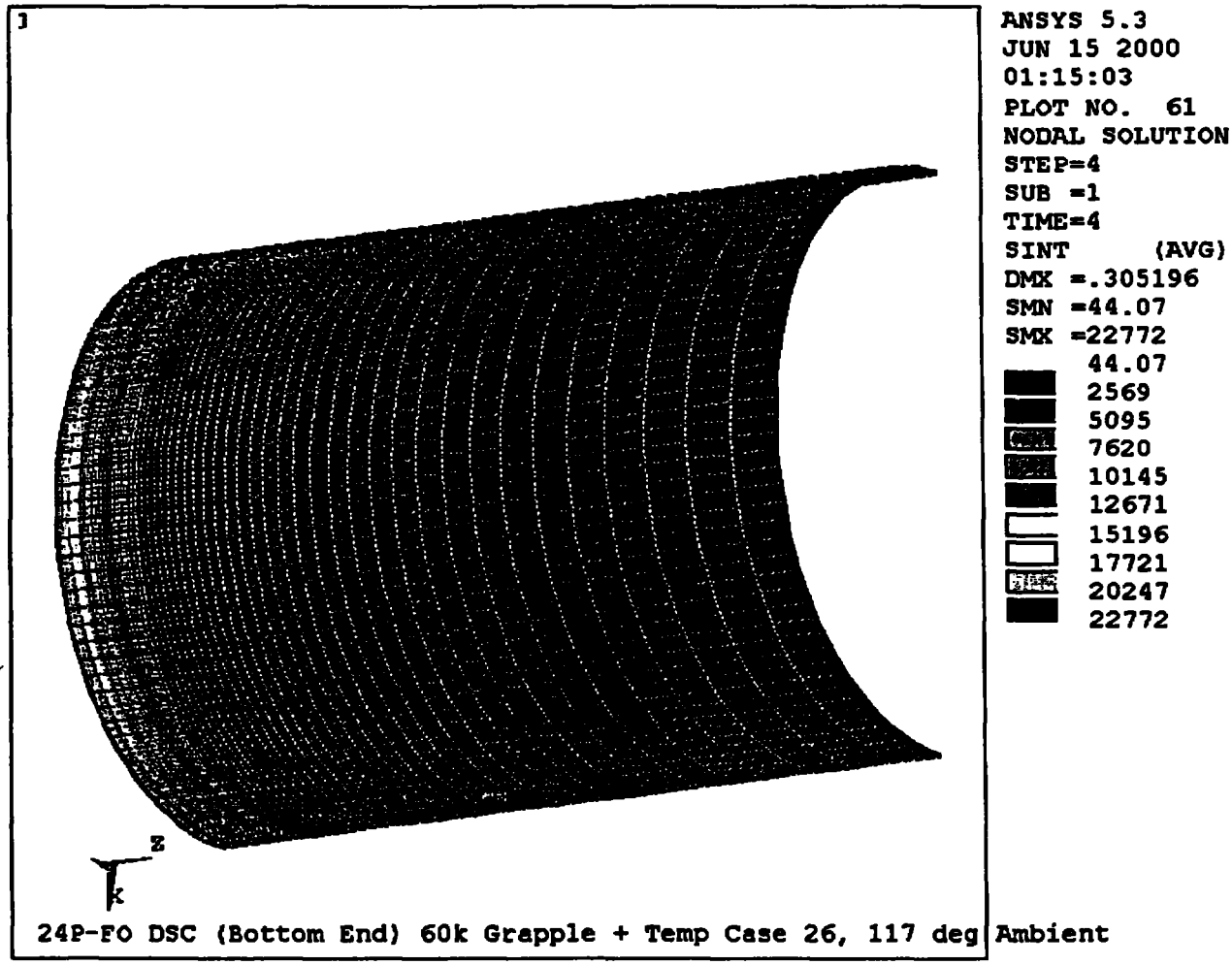

Figure B27-12

24P-FO DSC Shell Assembly, Cylindrical Shell (Bottom Half)

Stress Intensity Contour

Appendix B28

ANSYS Stress Intensity Contour Plots for Run PB24PT-G

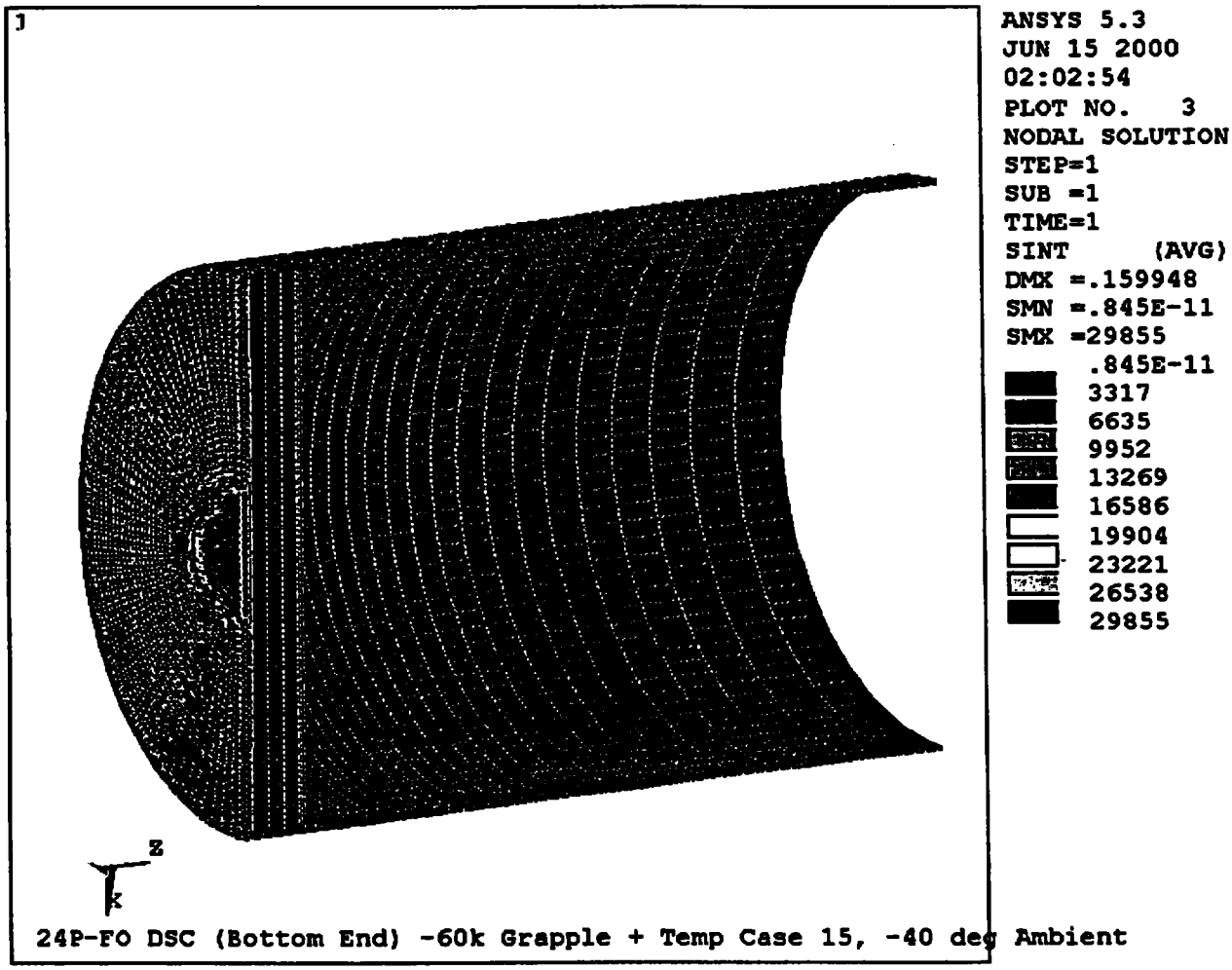

Figure B28-1

24P-FO DSC Shell Assembly, Bottom End Components

Stress Intensity Contour

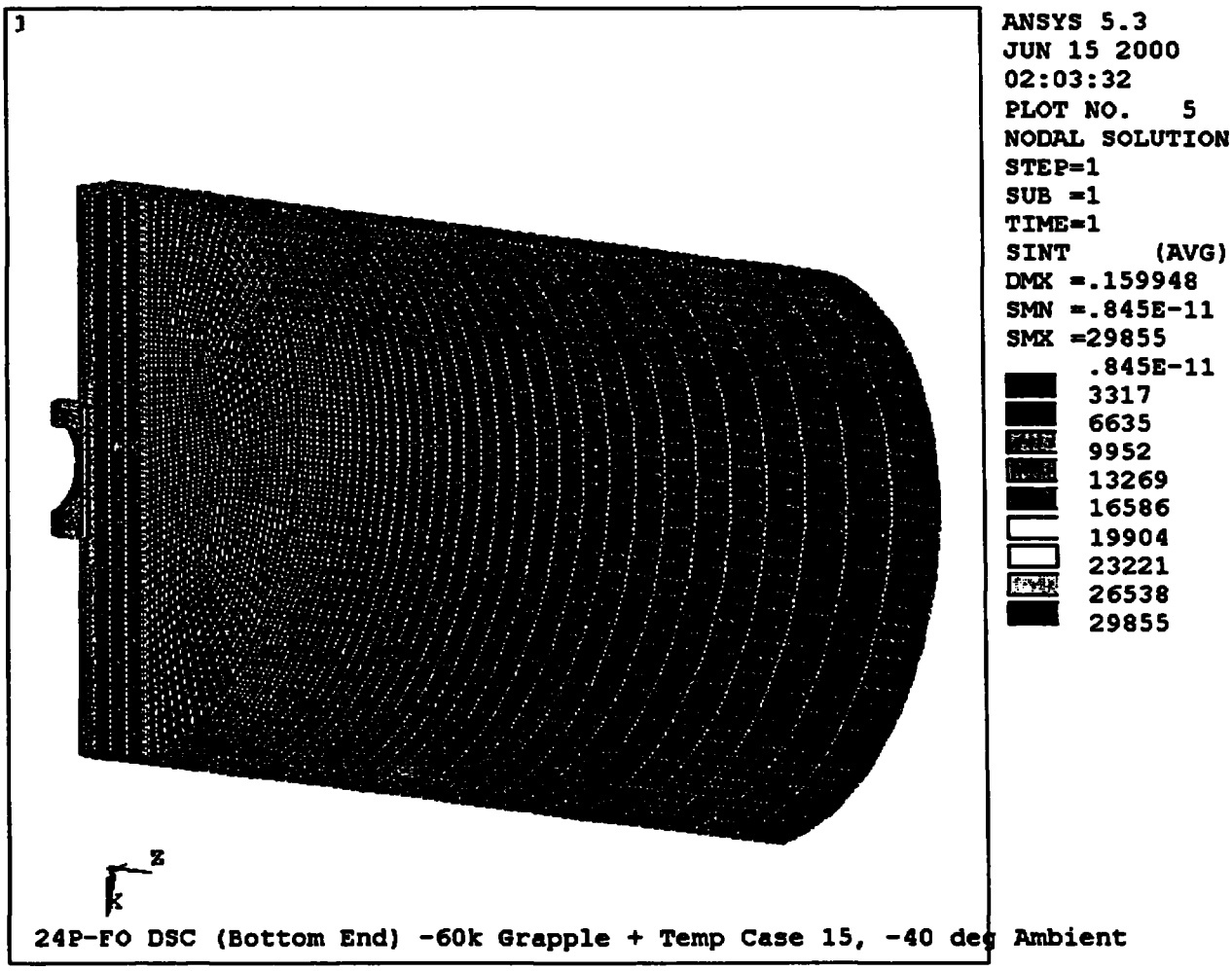

Figure B28-2

24P-FO DSC Shell Assembly, Bottom End Components

Stress Intensity Contour

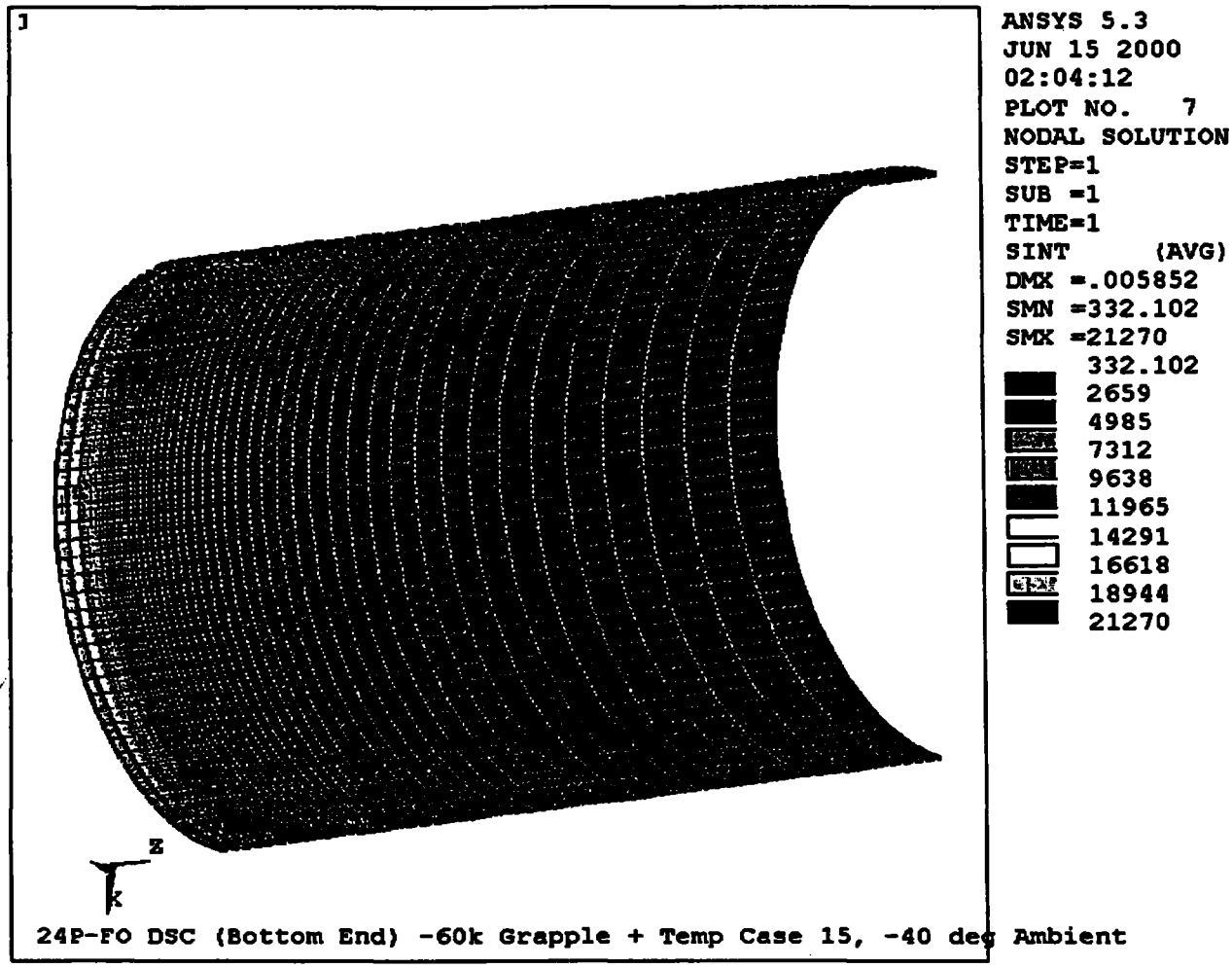

Figure B28-3

24P-FO DSC Shell Assembly, Cylindrical Shell (Bottom Half)

Stress Intensity Contour

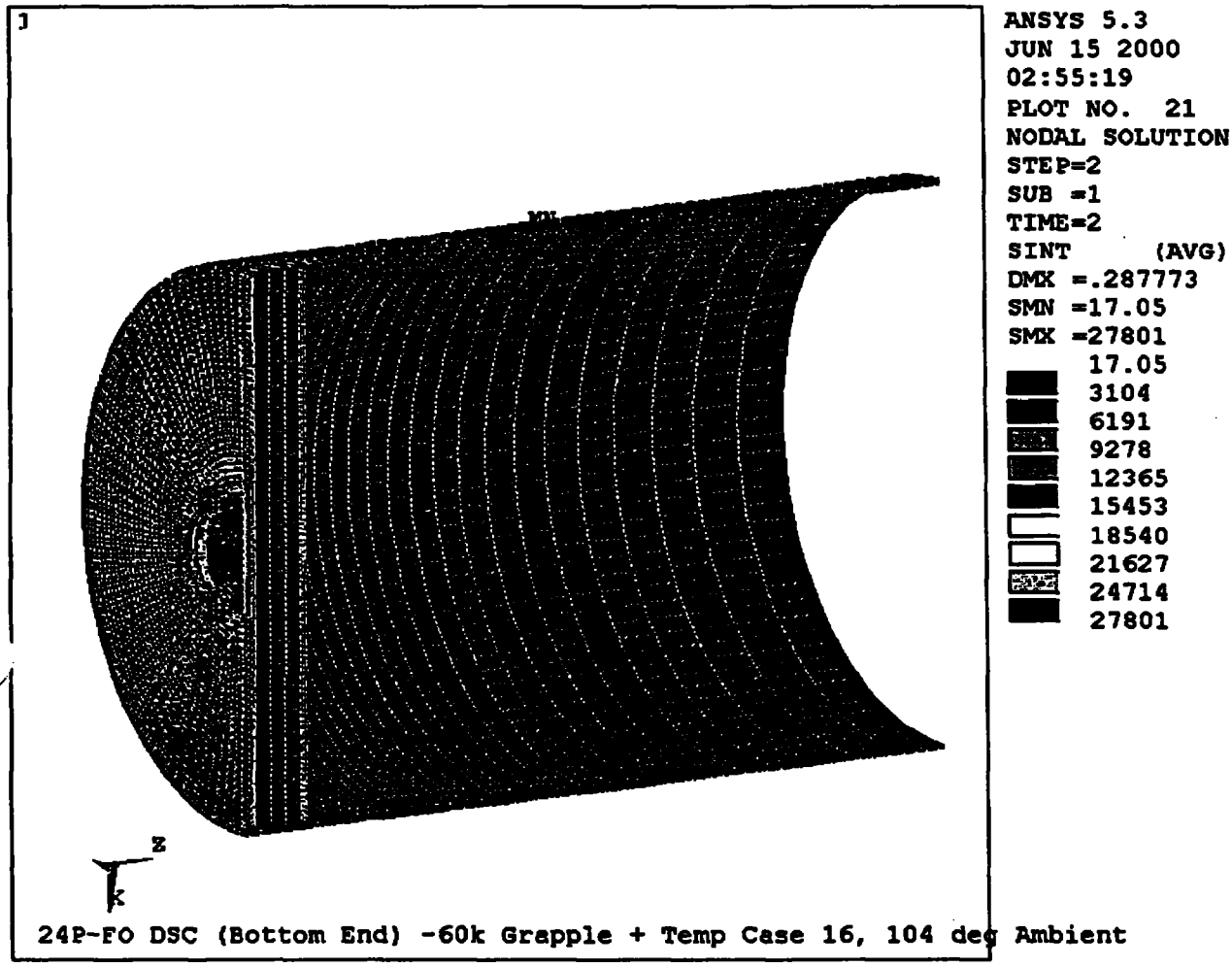

Figure B28-4

24P-FO DSC Shell Assembly, Bottom End Components

Stress Intensity Contour

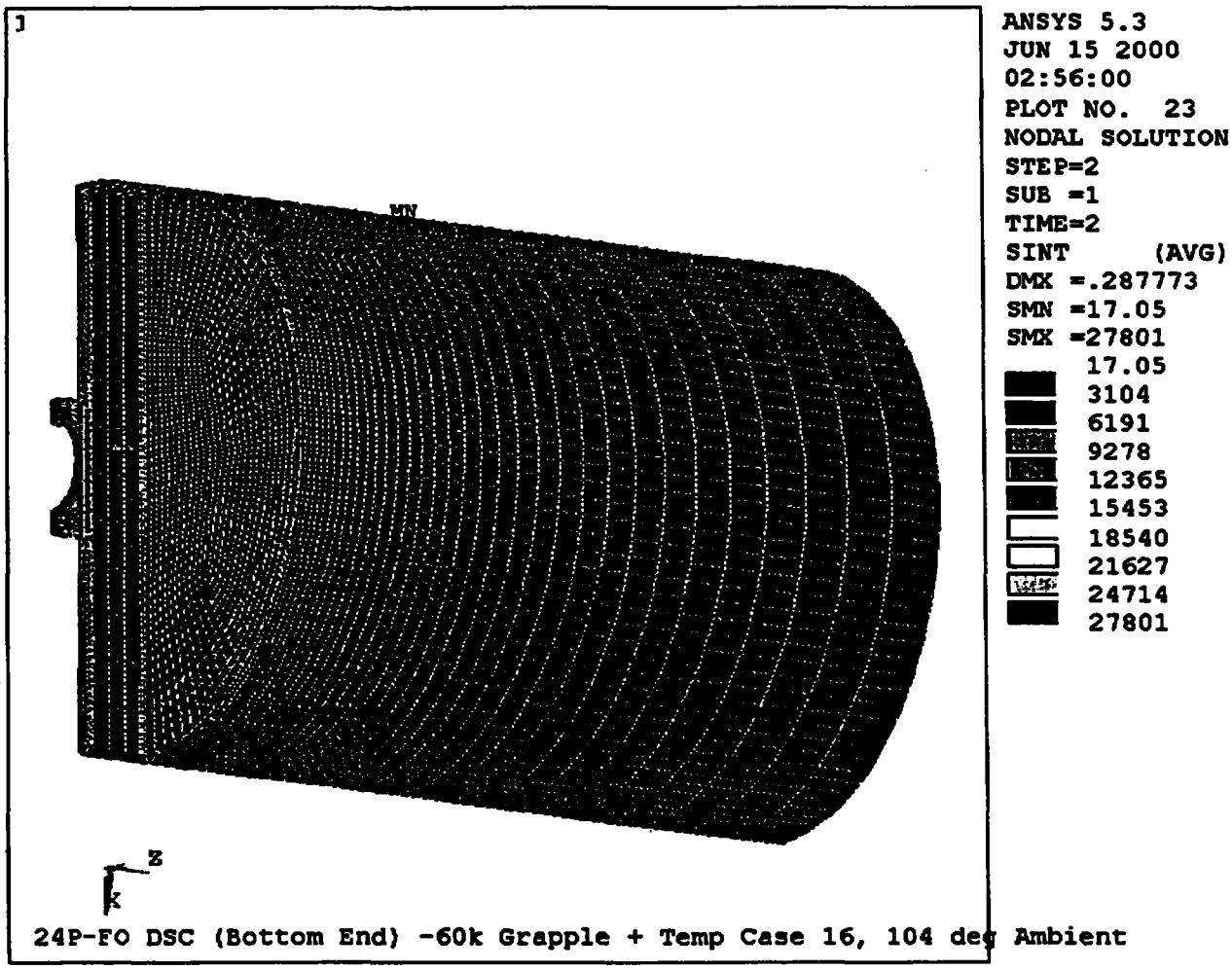

Figure B28-5

24P-FO DSC Shell Assembly, Bottom End Components

Stress Intensity Contour

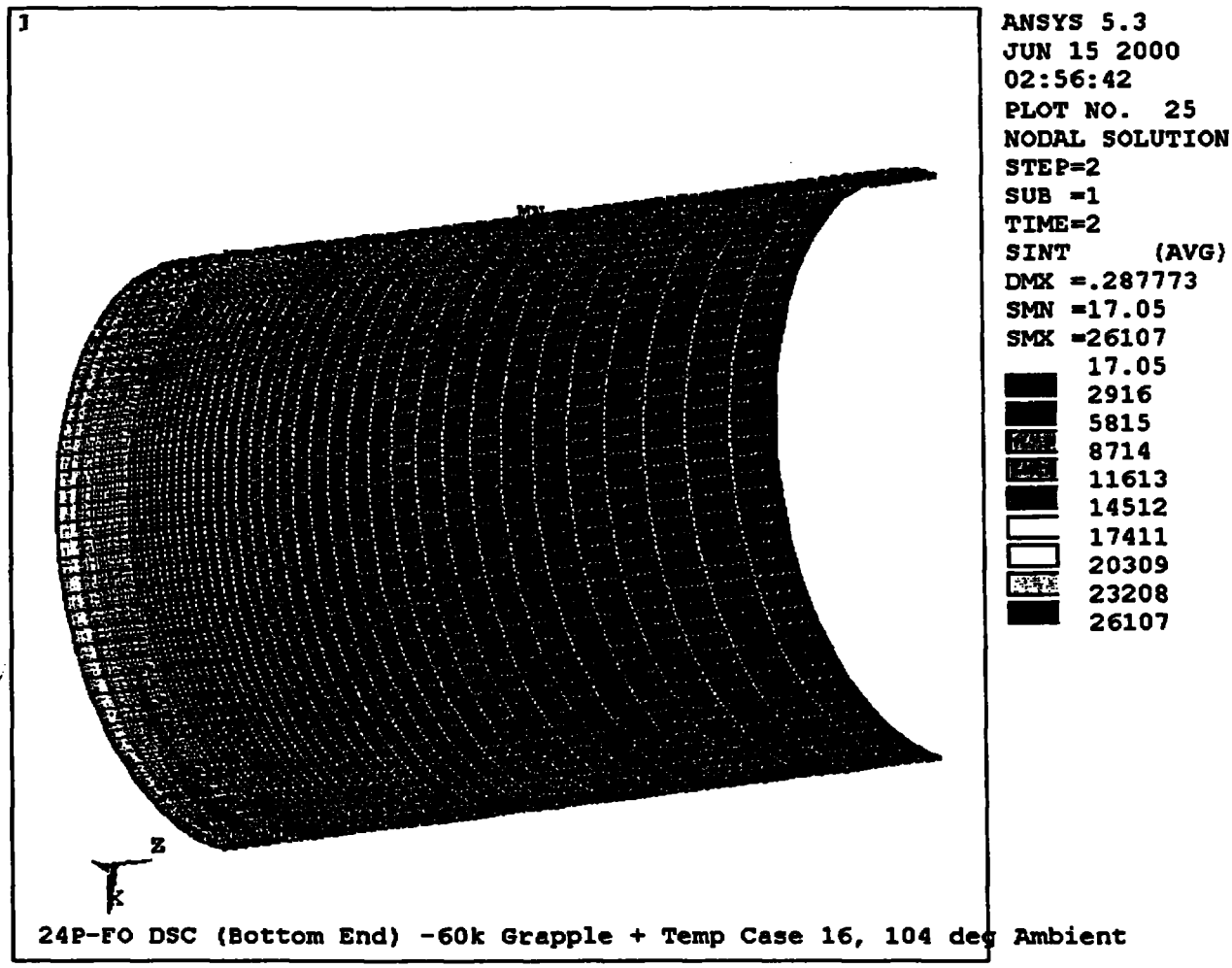

Figure B28-6

24P-FO DSC Shell Assembly, Cylindrical Shell (Bottom Half)

Stress Intensity Contour

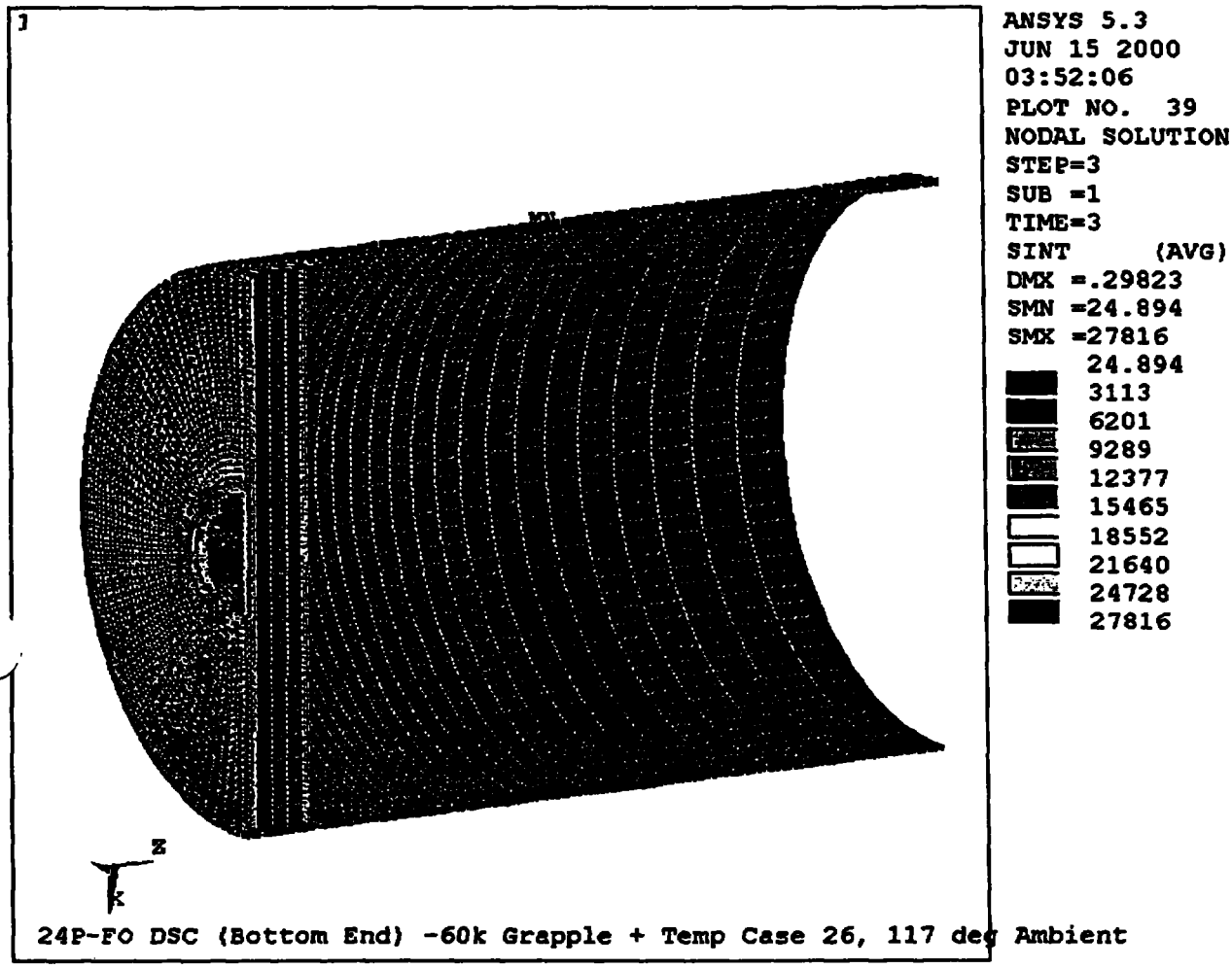

Figure B28-7

24P-FO DSC Shell Assembly, Bottom End Components

Stress Intensity Contour

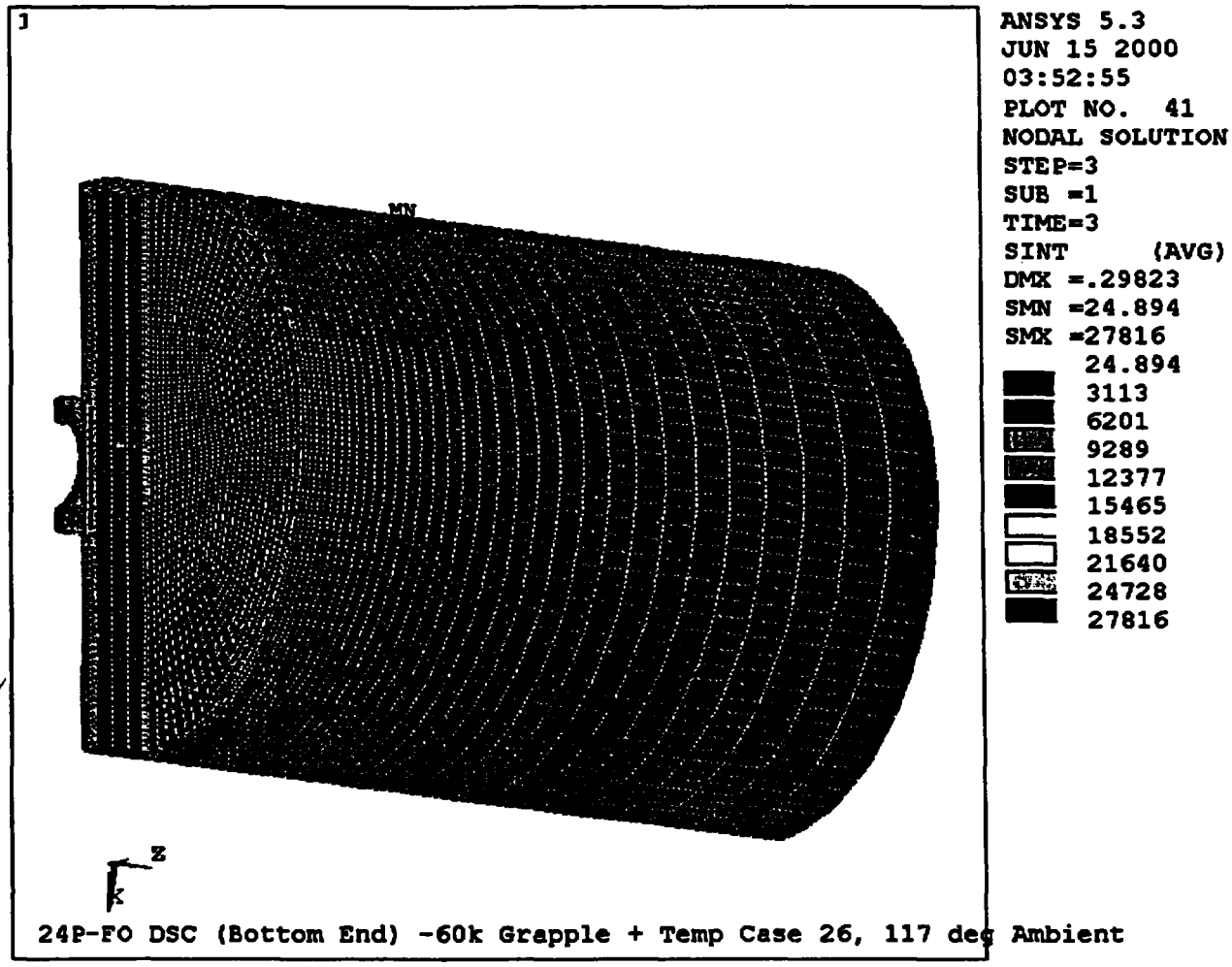

Figure B28-8

24P-FO DSC Shell Assembly, Bottom End Components

Stress Intensity Contour

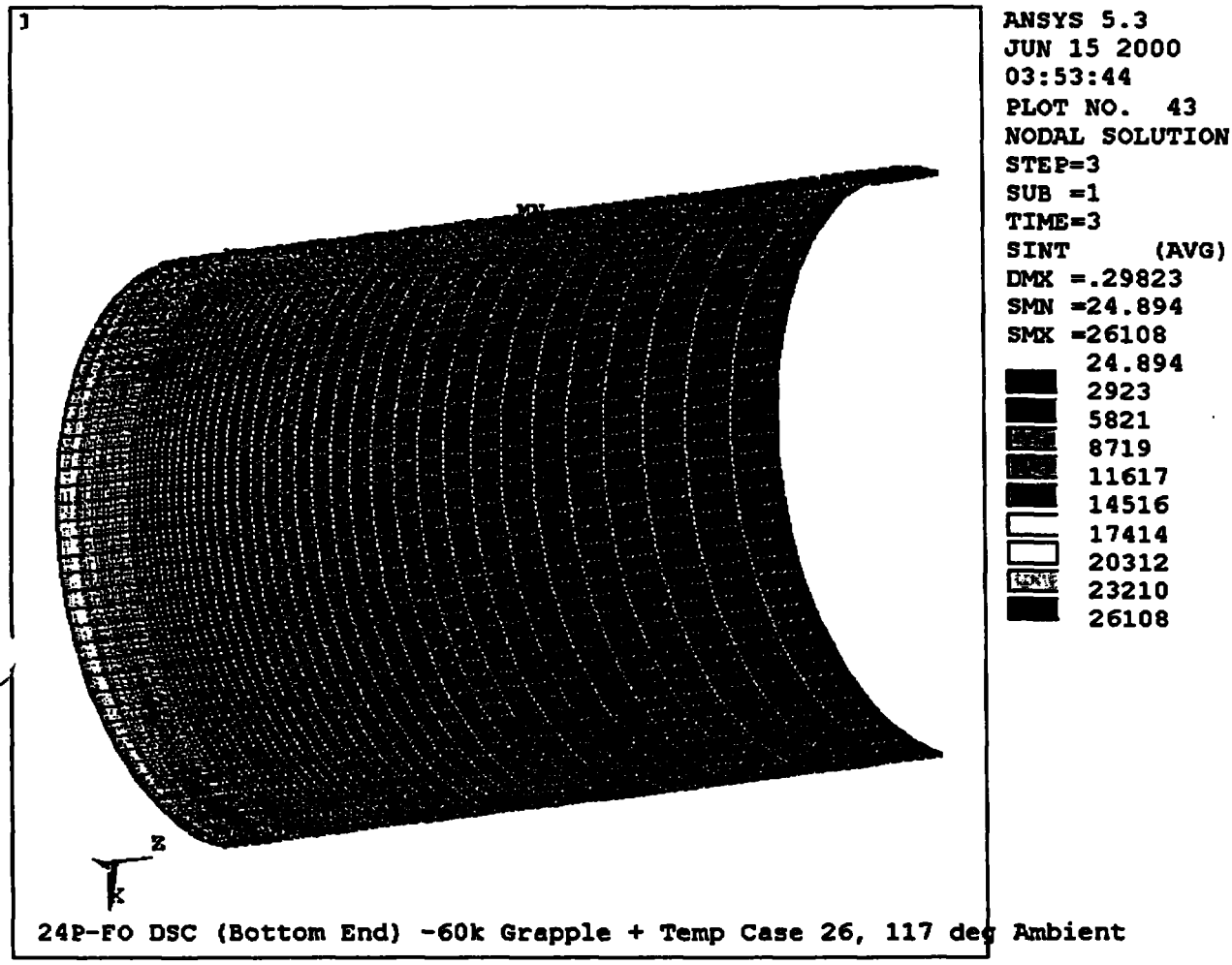

Figure B28-9

24P-FO DSC Shell Assembly, Cylindrical Shell (Bottom Half)

Stress Intensity Contour

Appendix B29

ANSYS Stress Intensity Contour Plots for Run PB24PRAM

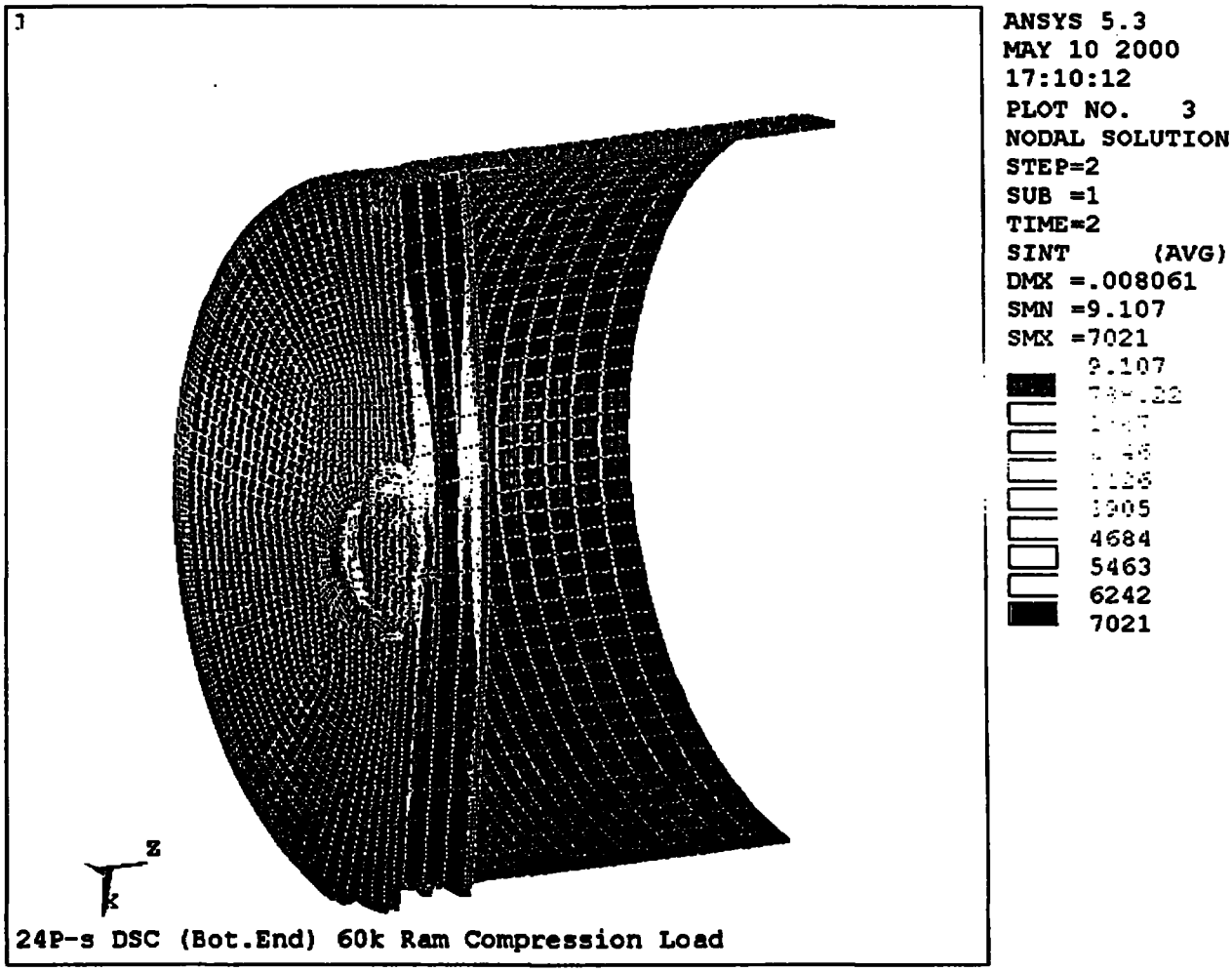

Figure B29-1

24P-FO DSC Shell Assembly, Bottom End Components

Stress Intensity Contour

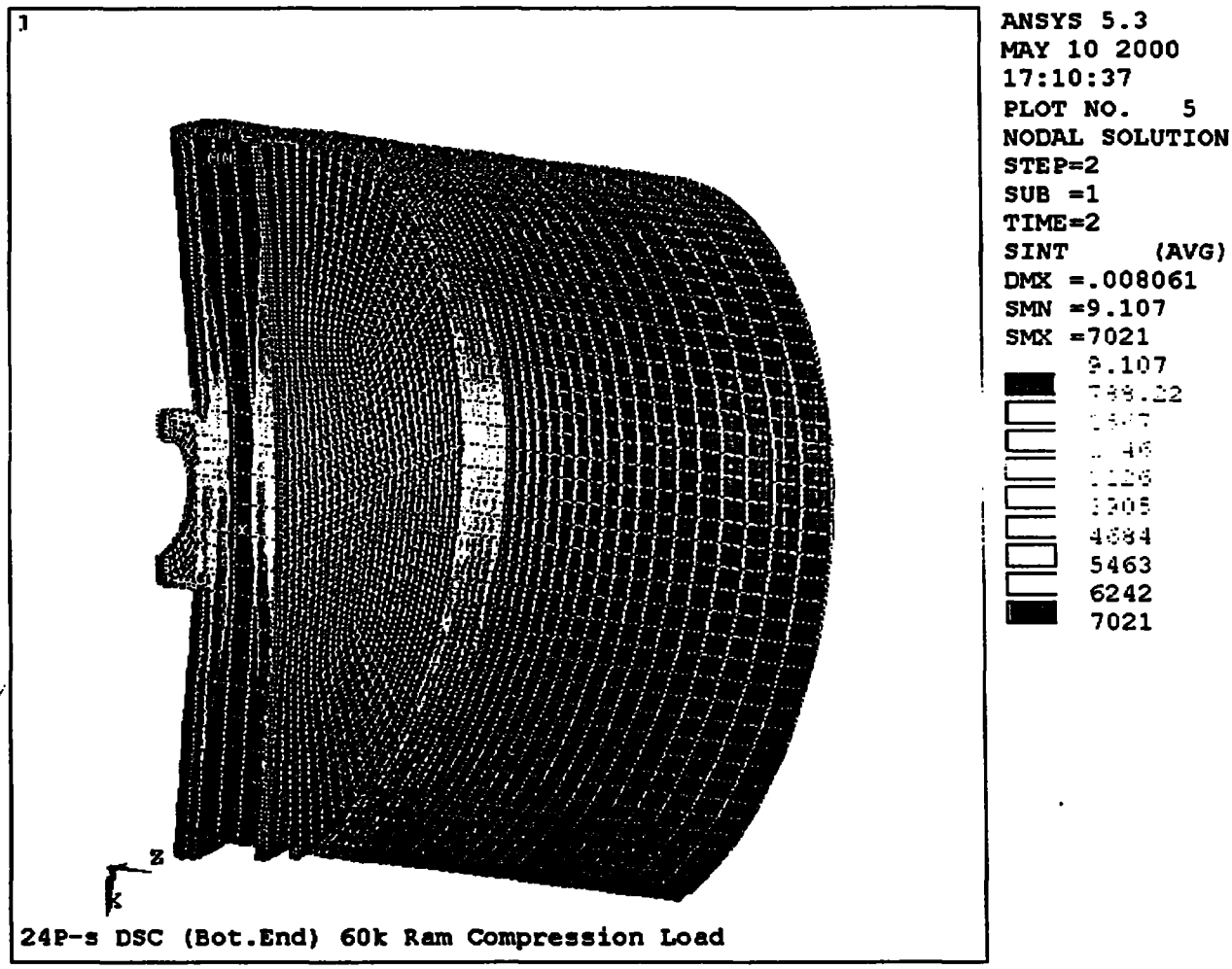

Figure B29-2

24P-FO DSC Shell Assembly, Bottom End Components

Stress Intensity Contour

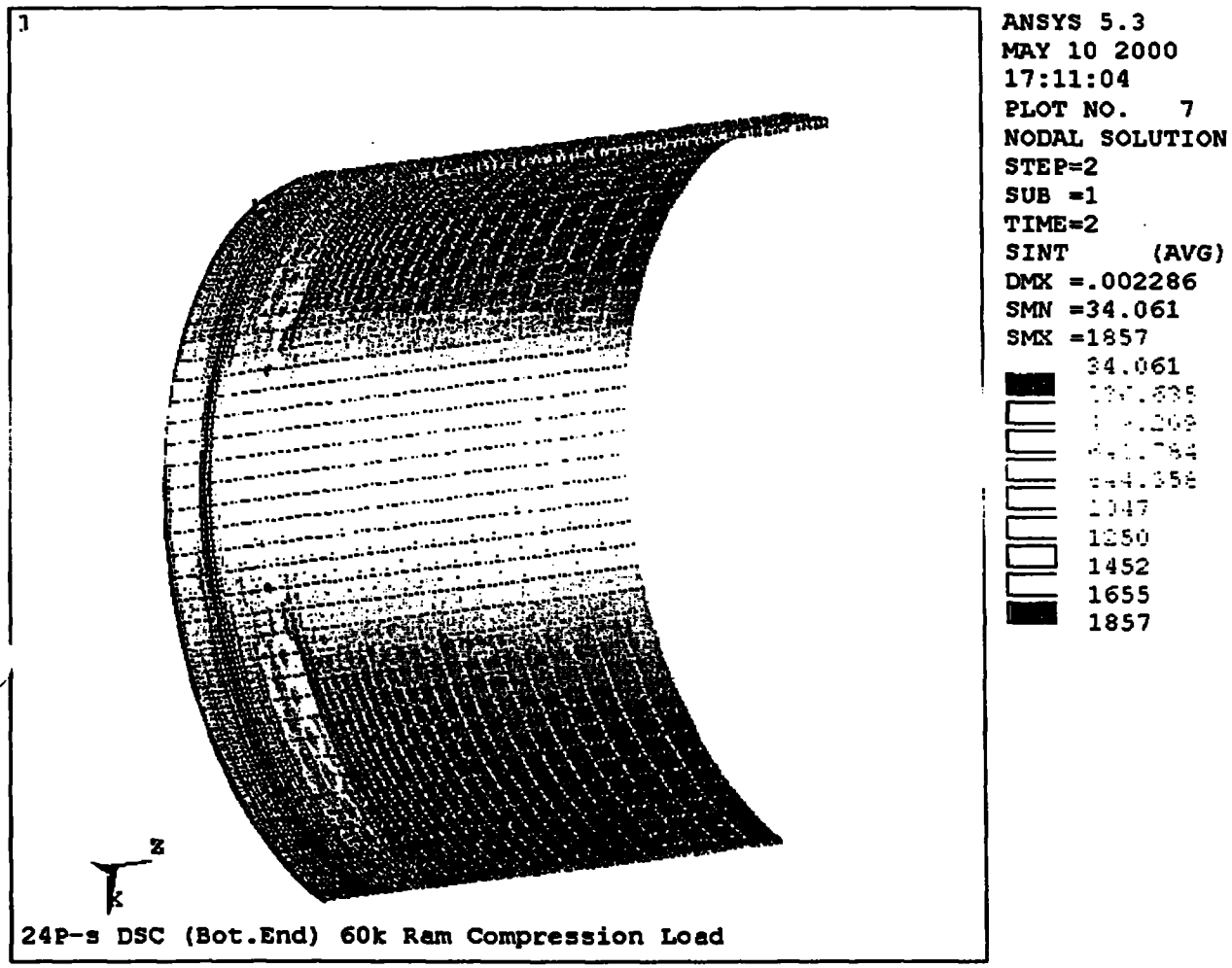

Figure B29-3

24P-FO DSC Shell Assembly, Cylindrical Shell (Bottom Half)

Stress Intensity Contour

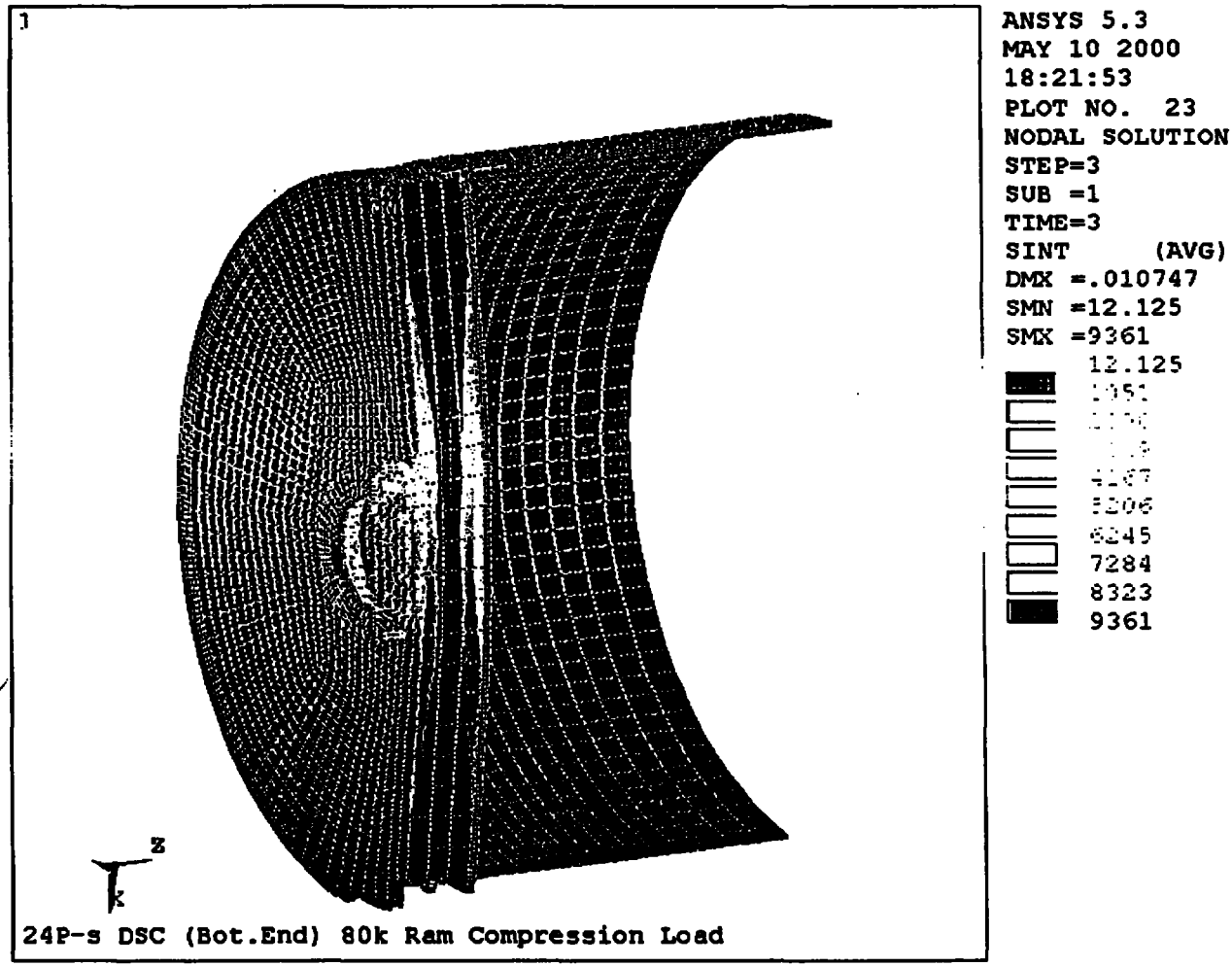

Figure B29-4

24P-FO DSC Shell Assembly, Bottom End Components

Stress Intensity Contour

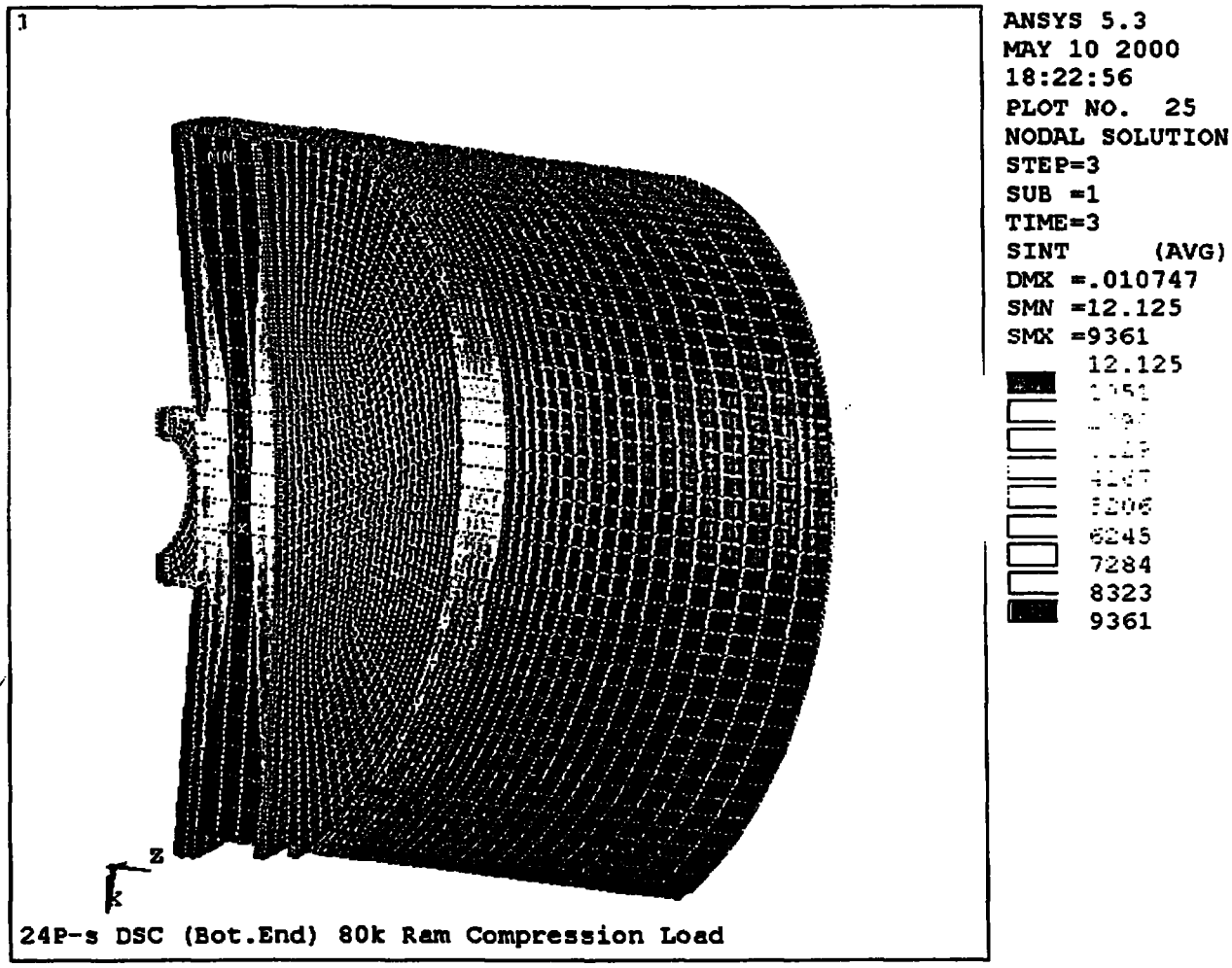

Figure B29-5

24P-FO DSC Shell Assembly, Bottom End Components

Stress Intensity Contour

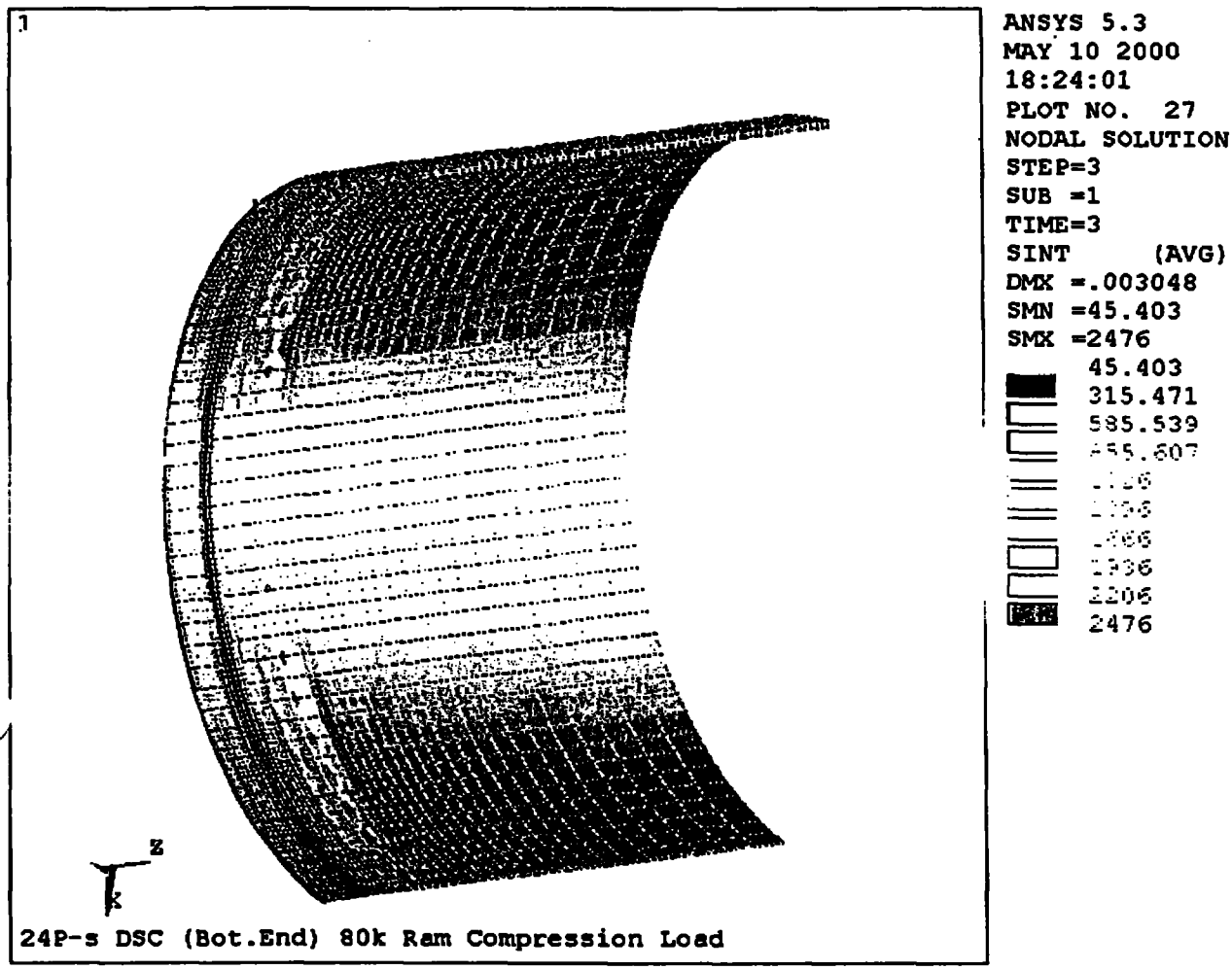

Figure B29-6

24P-FO DSC Shell Assembly, Cylindrical Shell (Bottom Half)

Stress Intensity Contour

Appendix B30

ANSYS Stress Intensity Contour Plots for Run PB24PTHR

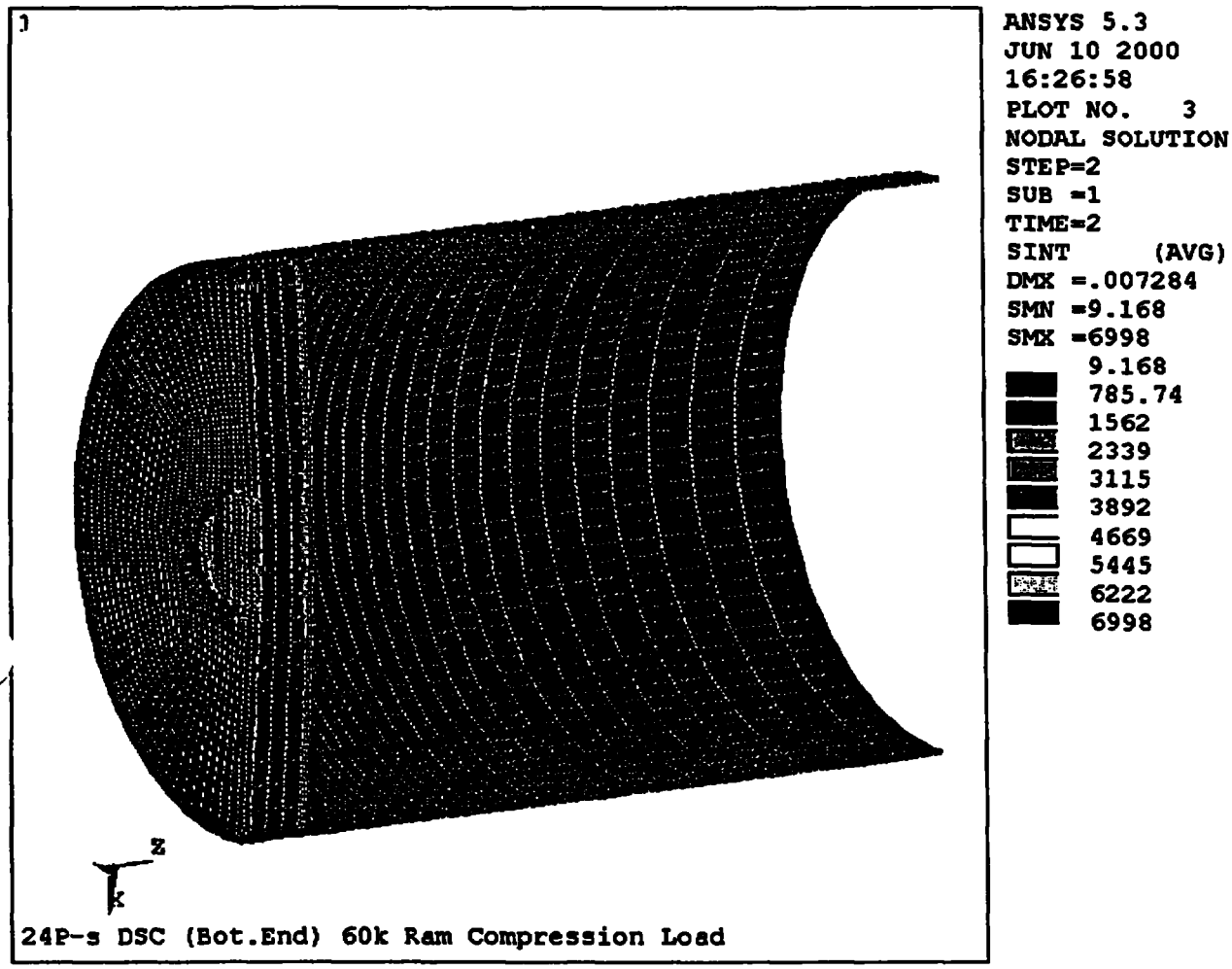

Figure B30-1

24P-FO DSC Shell Assembly, Bottom End Components

Stress Intensity Contour

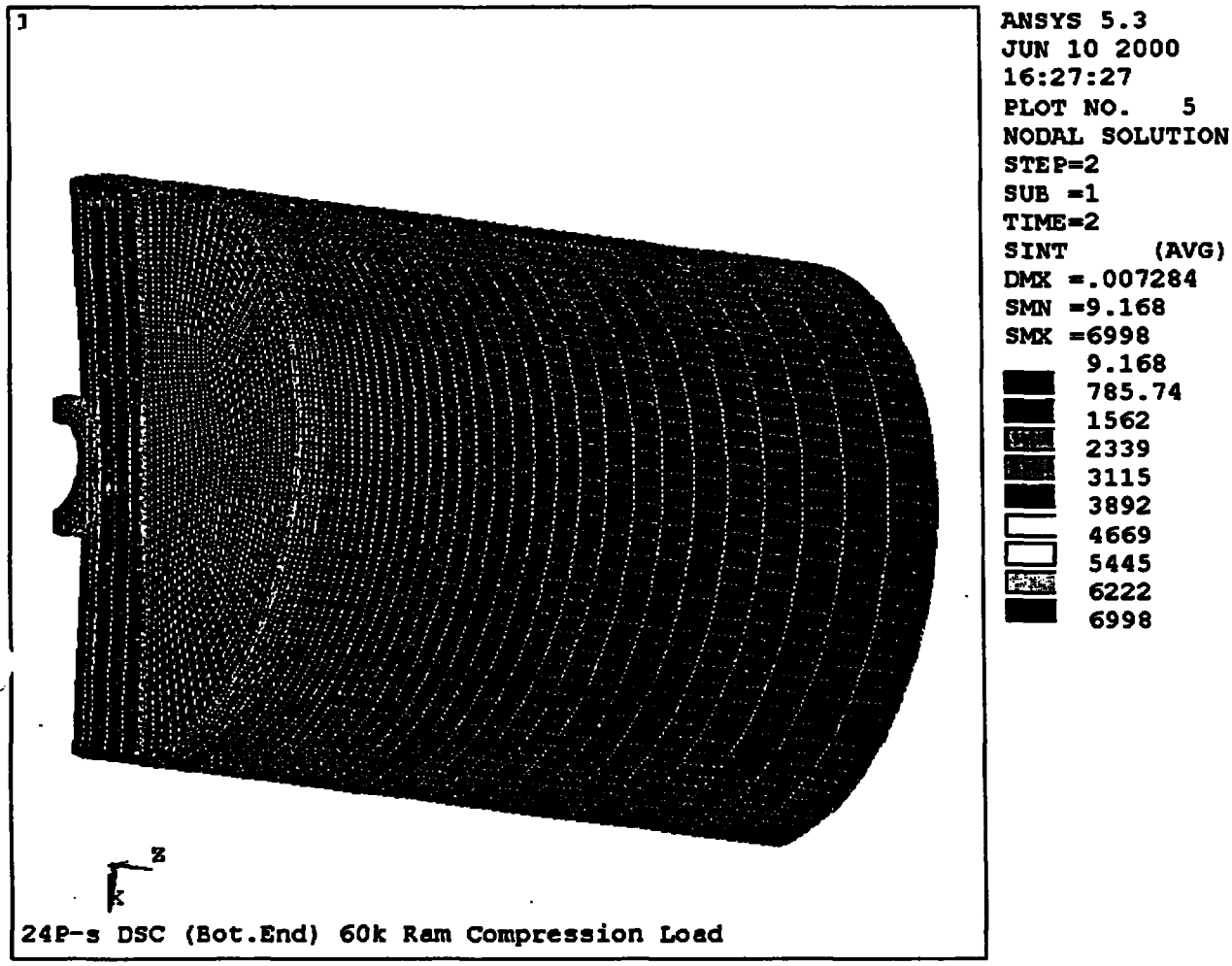

Figure B30-2

24P-FO DSC Shell Assembly, Bottom End Components

Stress Intensity Contour

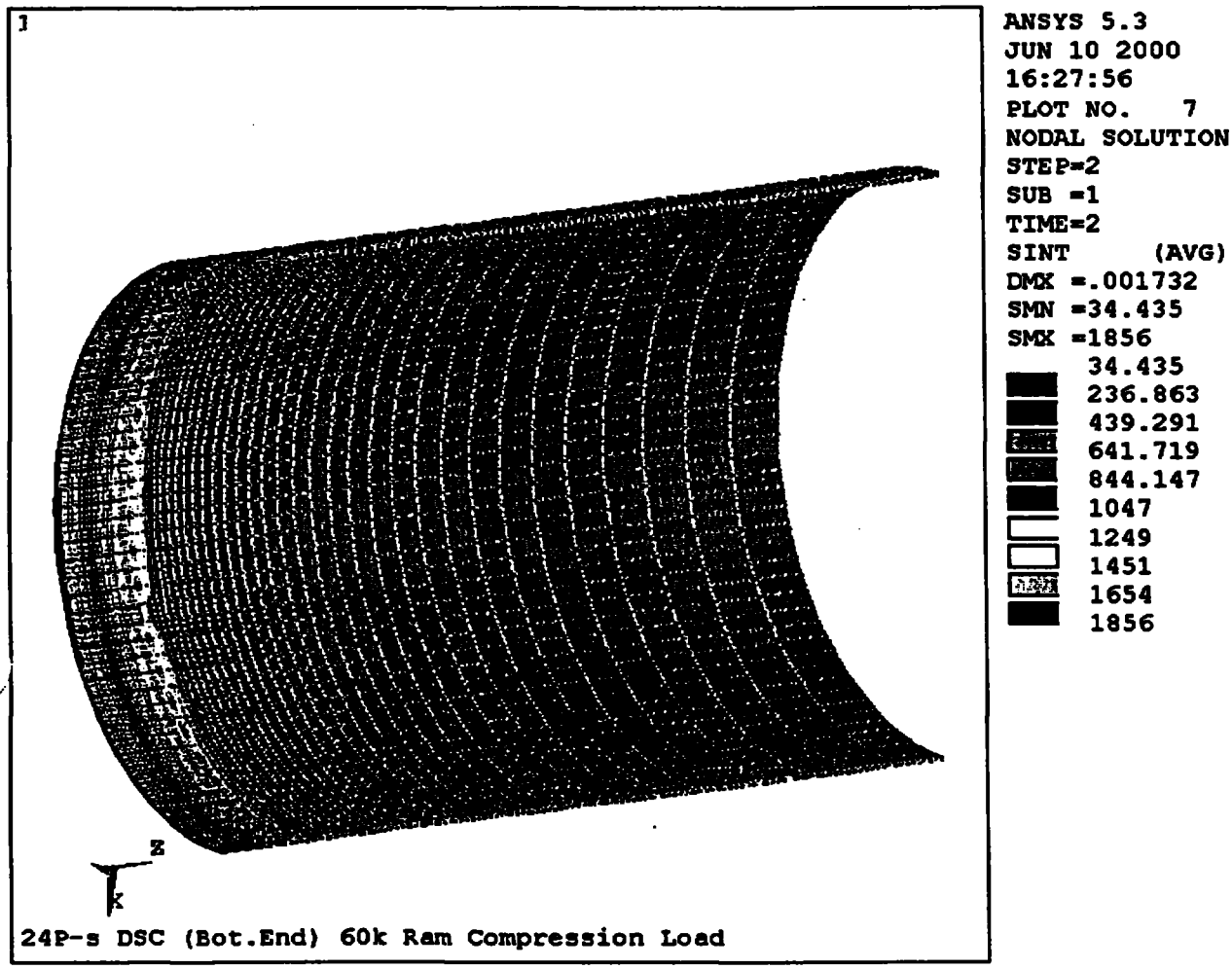

Figure B30-3

24P-FO DSC Shell Assembly, Cylindrical Shell (Bottom Half)

Stress Intensity Contour

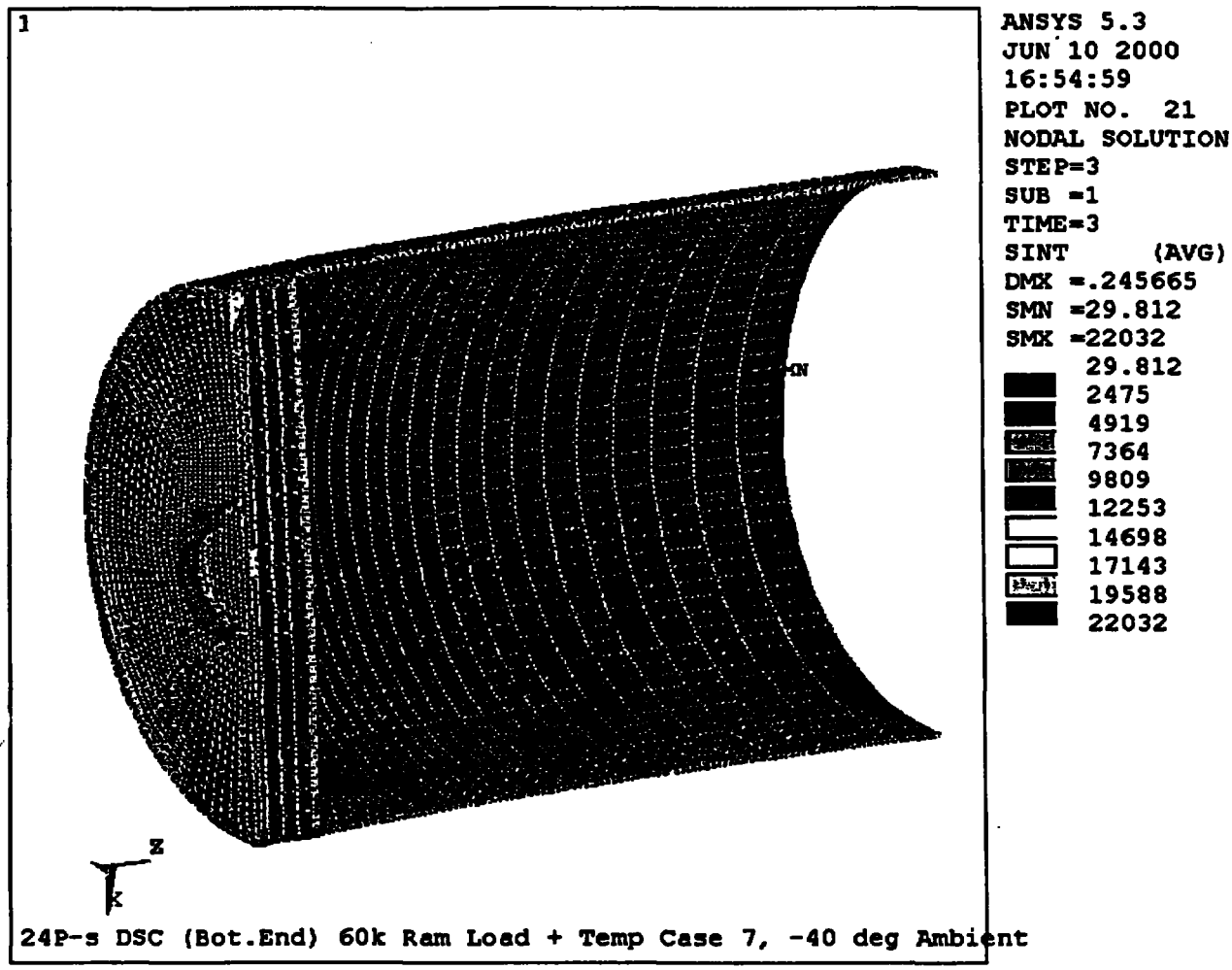

Figure B30-4

24P-FO DSC Shell Assembly, Bottom End Components

Stress Intensity Contour

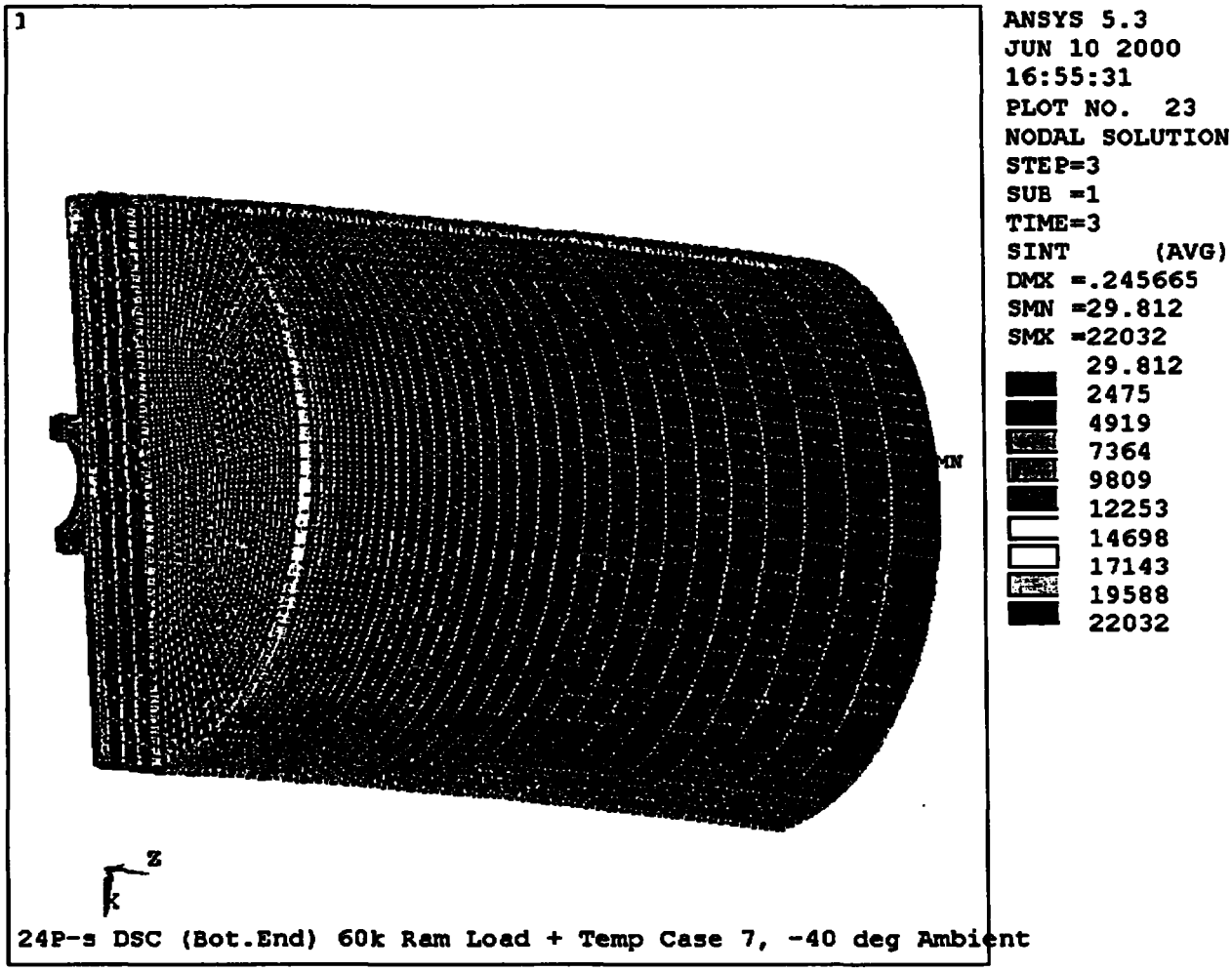

Figure B30-5

24P-FO DSC Shell Assembly, Bottom End Components

Stress Intensity Contour

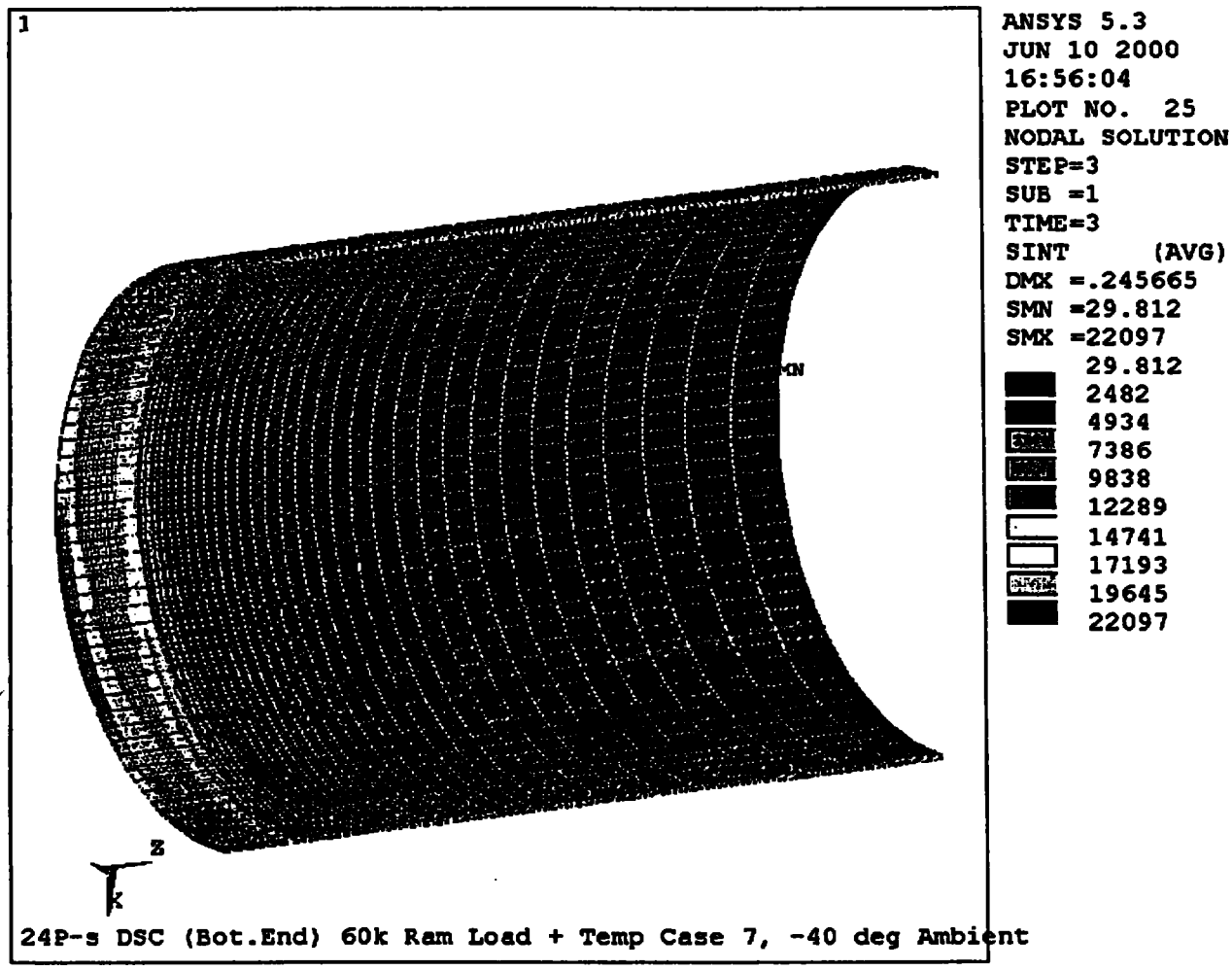

Figure B30-6

24P-FO DSC Shell Assembly, Cylindrical Shell (Bottom Half)

Stress Intensity Contour

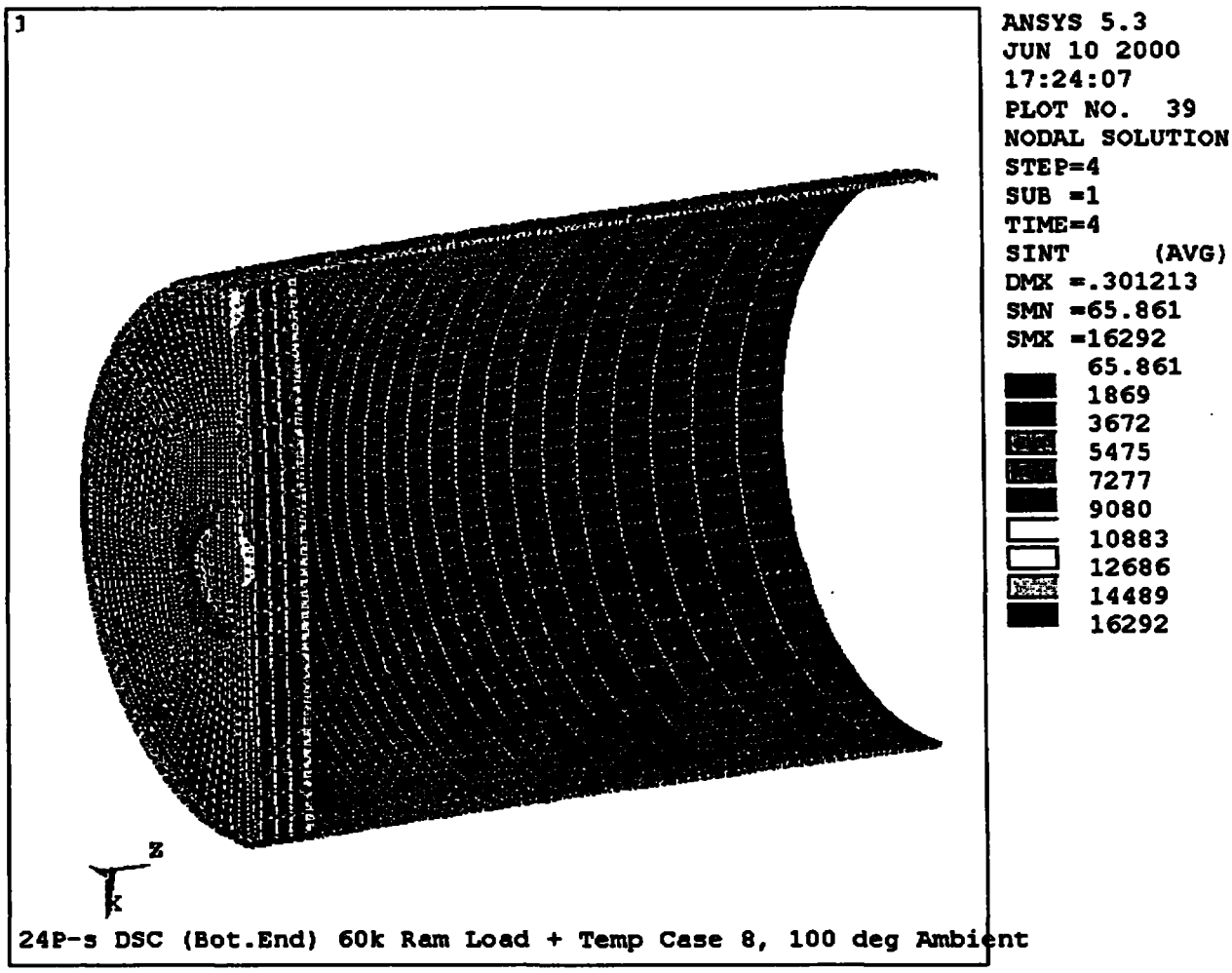

Figure B30-7

24P-FO DSC Shell Assembly, Bottom End Components

Stress Intensity Contour

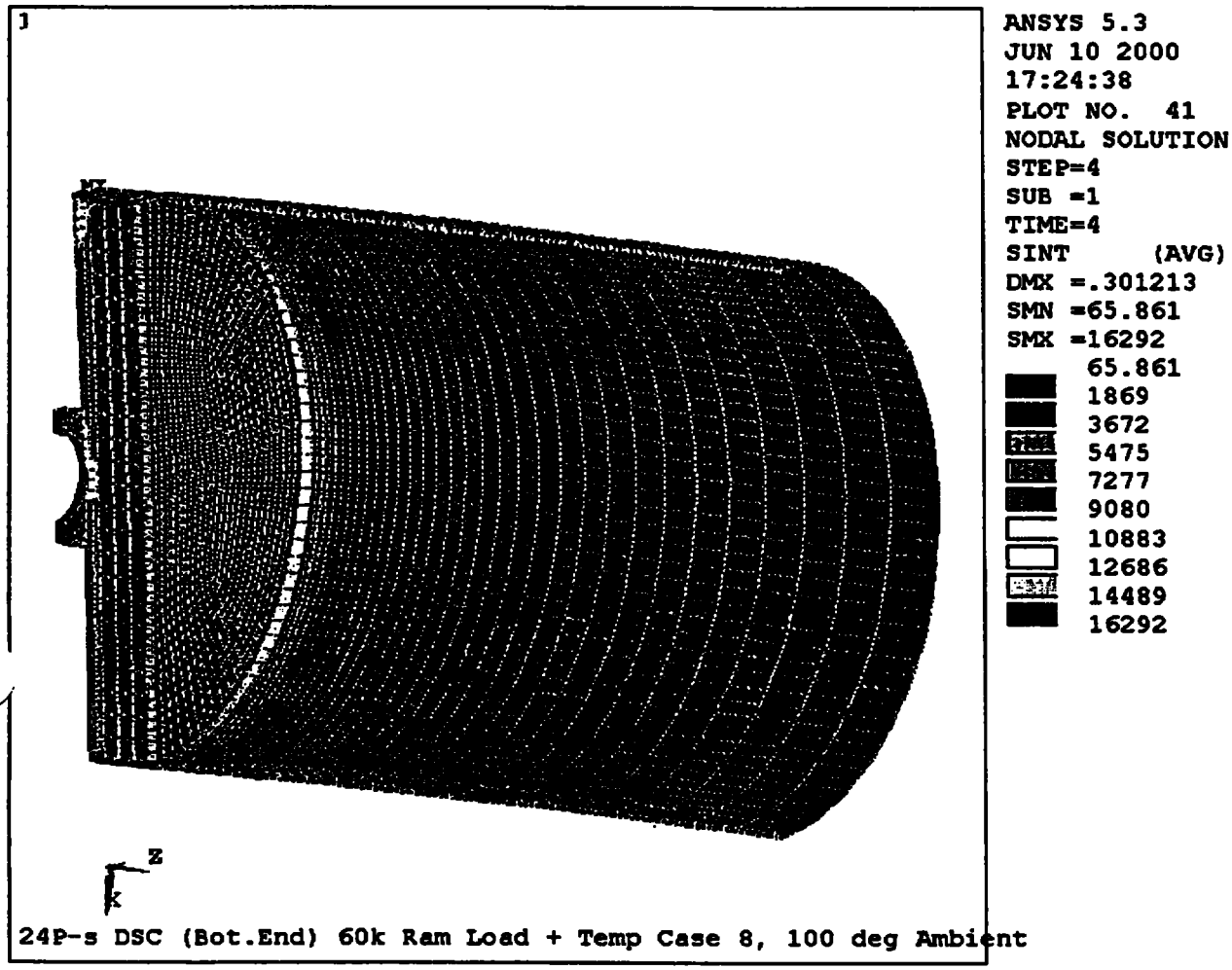

Figure B30-8

24P-FO DSC Shell Assembly, Bottom End Components

Stress Intensity Contour

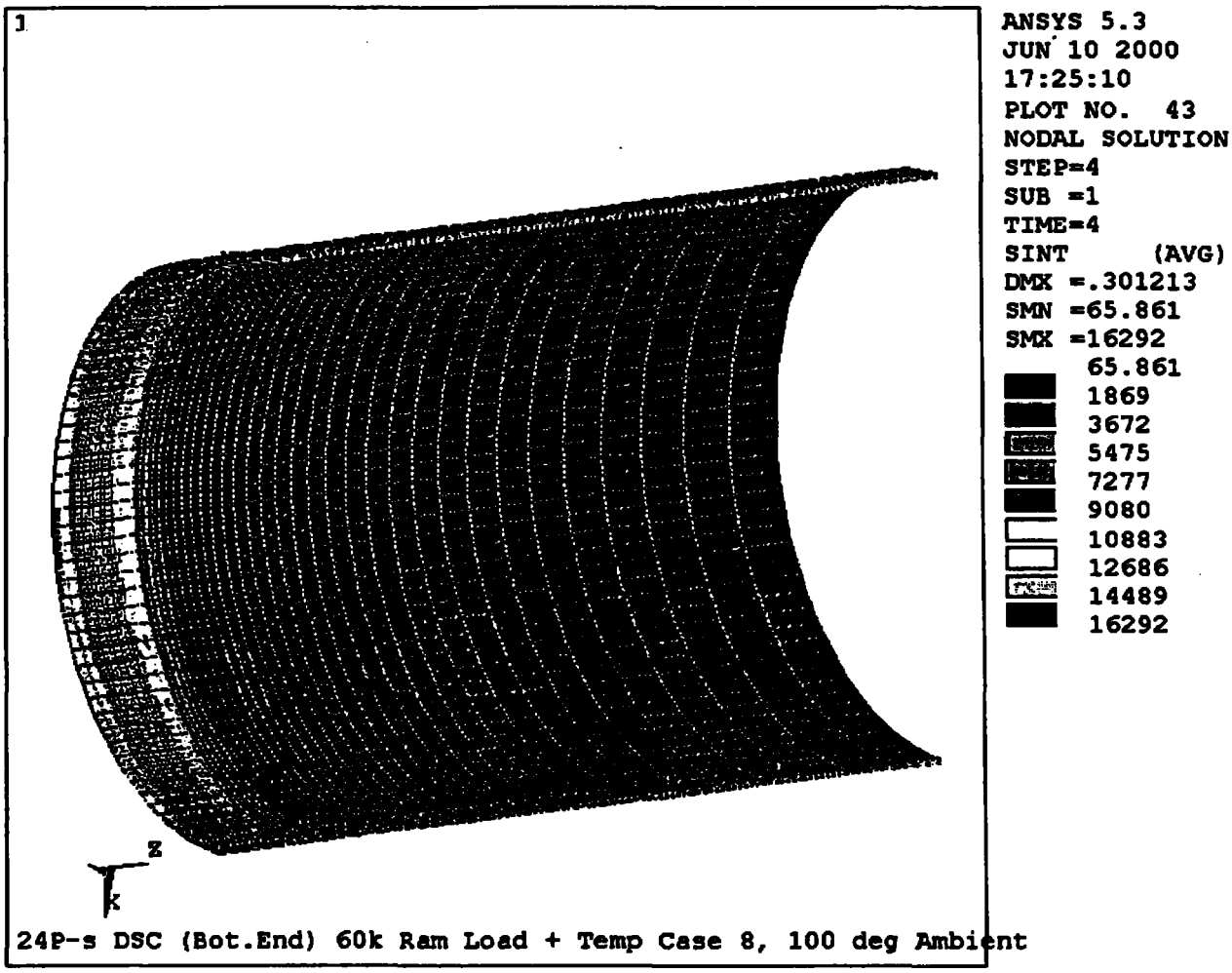

Figure B30-9

24P-FO DSC Shell Assembly, Cylindrical Shell (Bottom Half)

Stress Intensity Contour

Appendix B31

ANSYS Stress Intensity Contour Plots for Run PB24PTR2

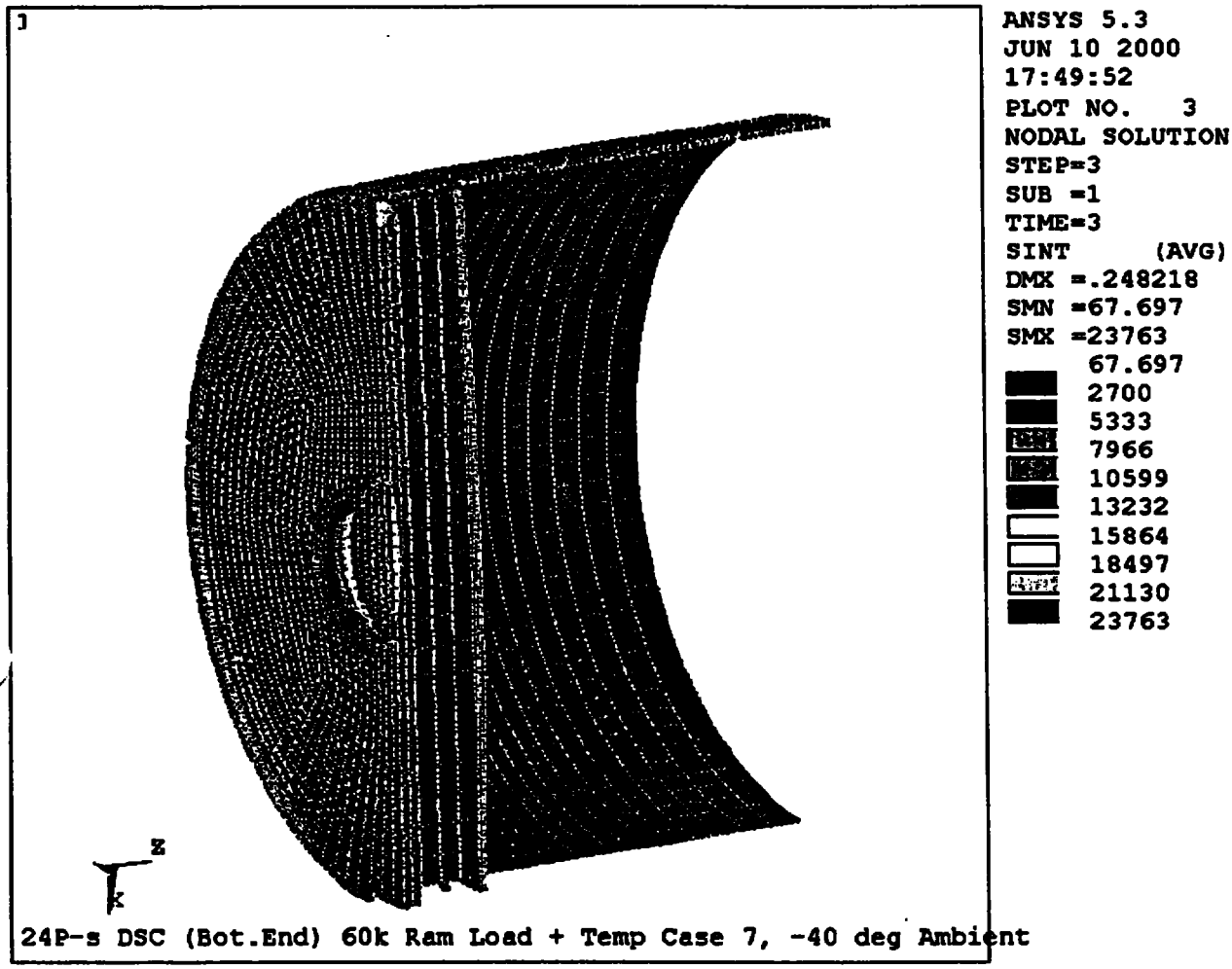

Figure B31-1

24P-FO DSC Shell Assembly, Bottom End Components

Stress Intensity Contour

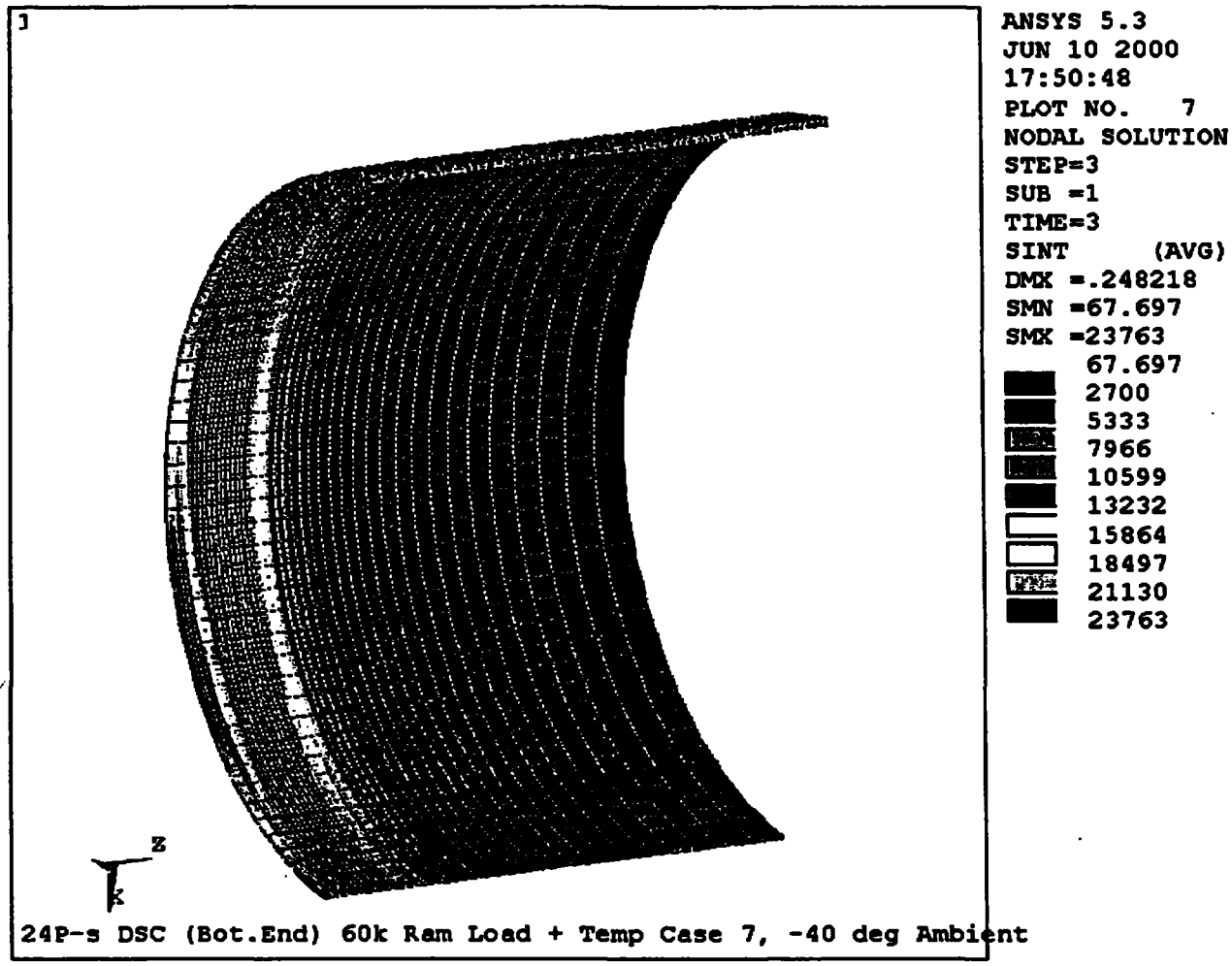

Figure B31-2

24P-FO DSC Shell Assembly, Cylindrical Shell (Bottom Half)

Stress Intensity Contour

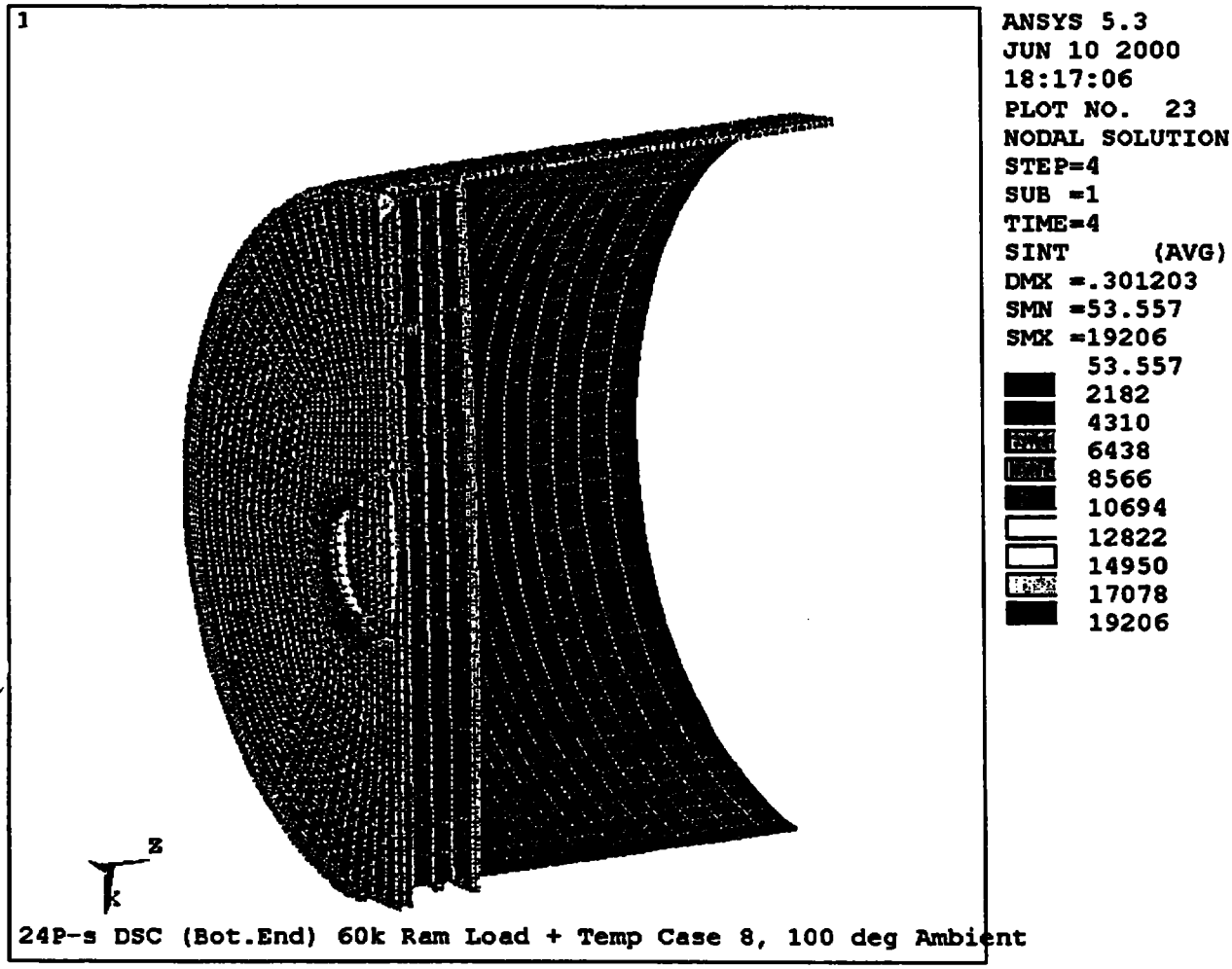

Figure B31-3

24P-FO DSC Shell Assembly, Bottom End Components

Stress Intensity Contour

Appendix B32

ANSYS Stress Intensity Contour Plots for Run PB24PTR3

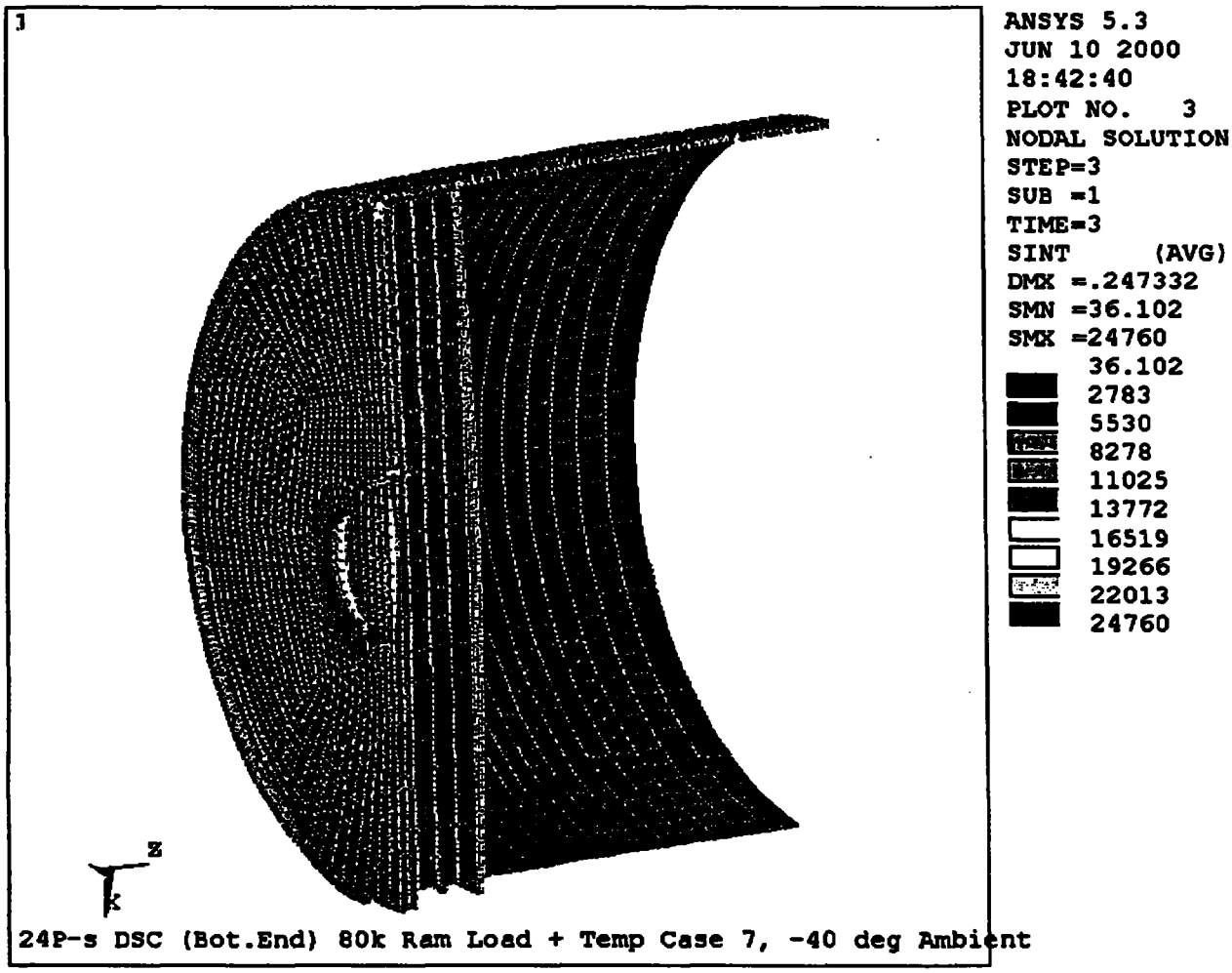

Figure B32-1

24P-FO DSC Shell Assembly, Bottom End Components

Stress Intensity Contour

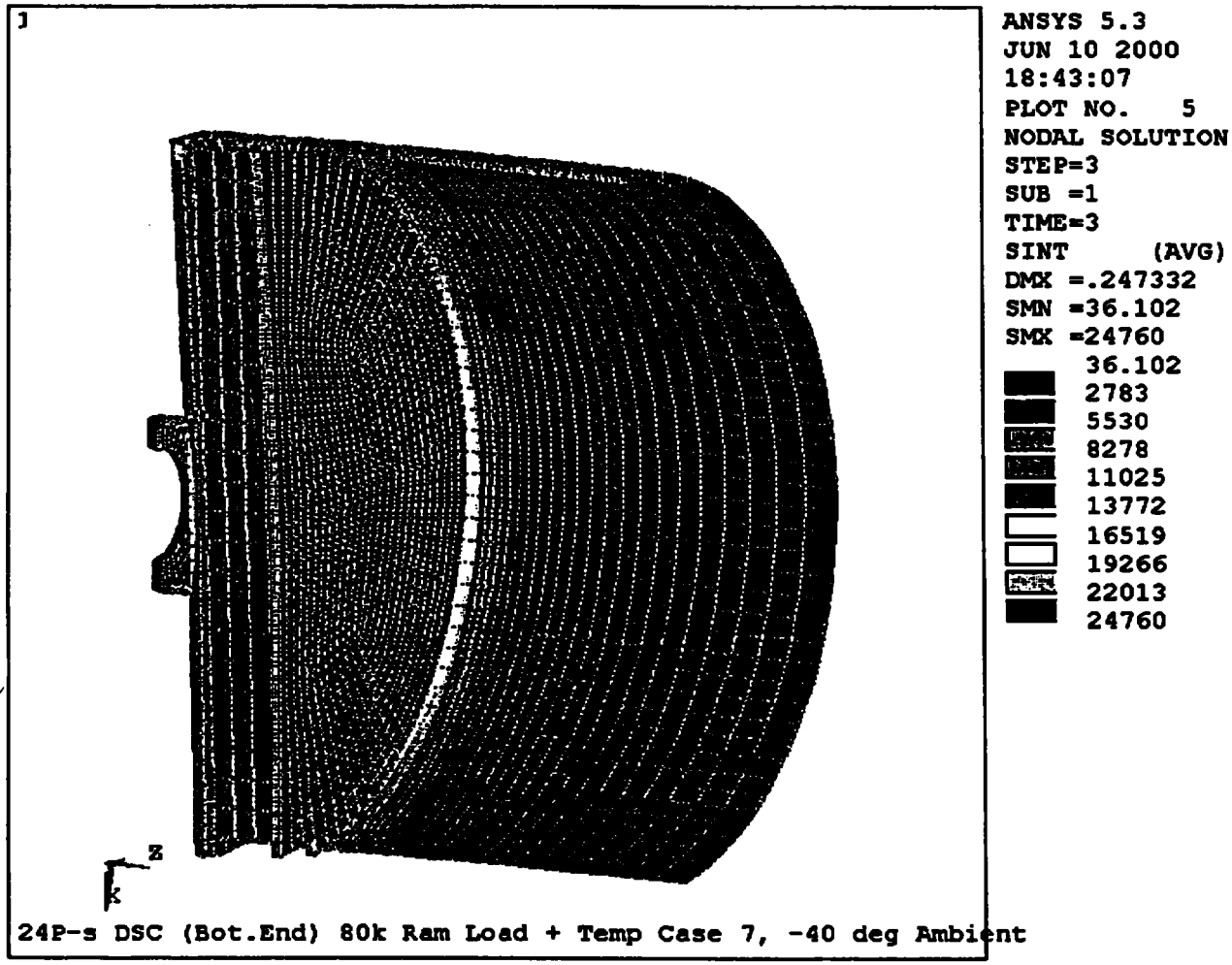

Figure B32-2

24P-FO DSC Shell Assembly, Bottom End Components

Stress Intensity Contour

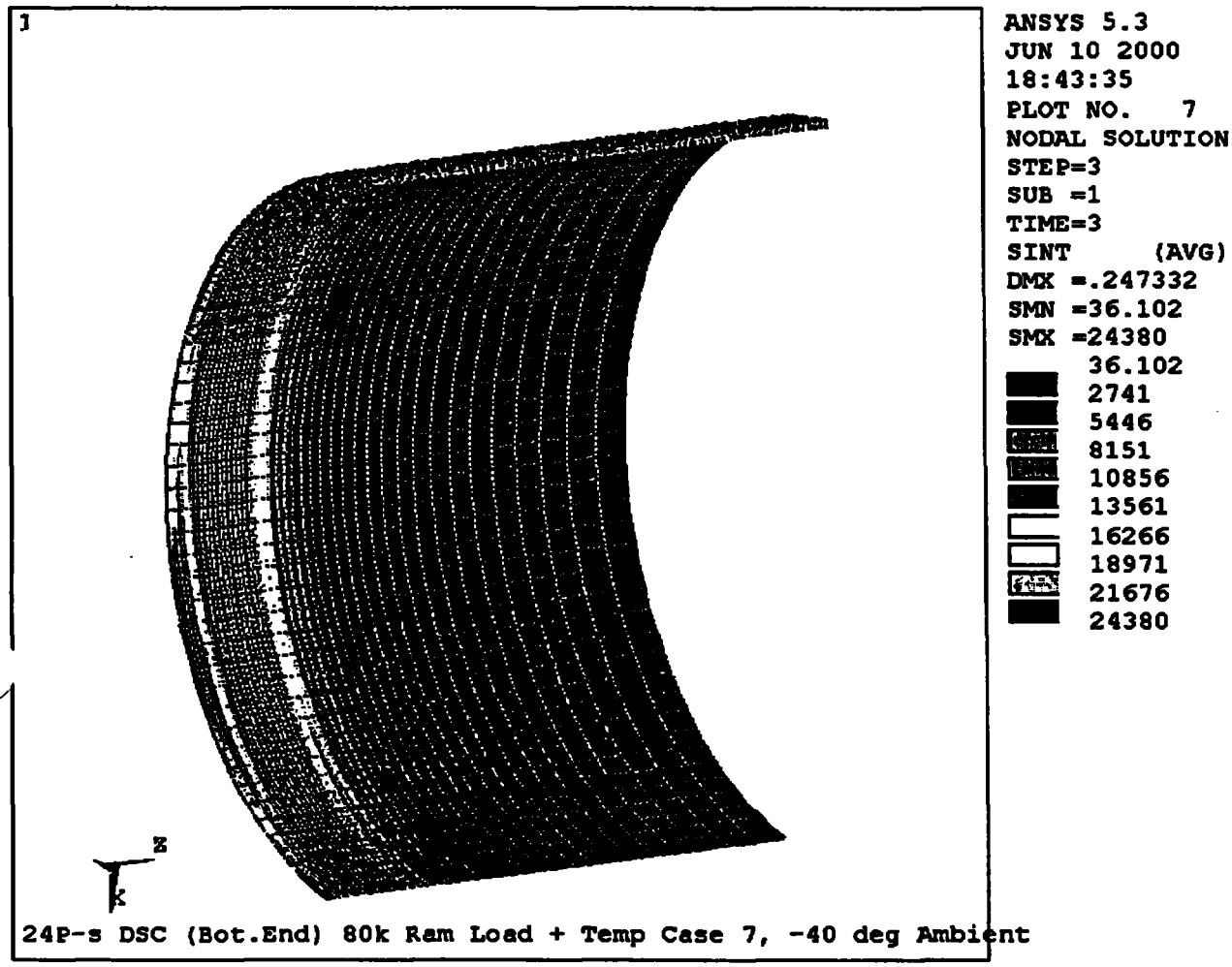

Figure B32-3

24P-FO DSC Shell Assembly, Cylindrical Shell (Bottom Half)

Stress Intensity Contour

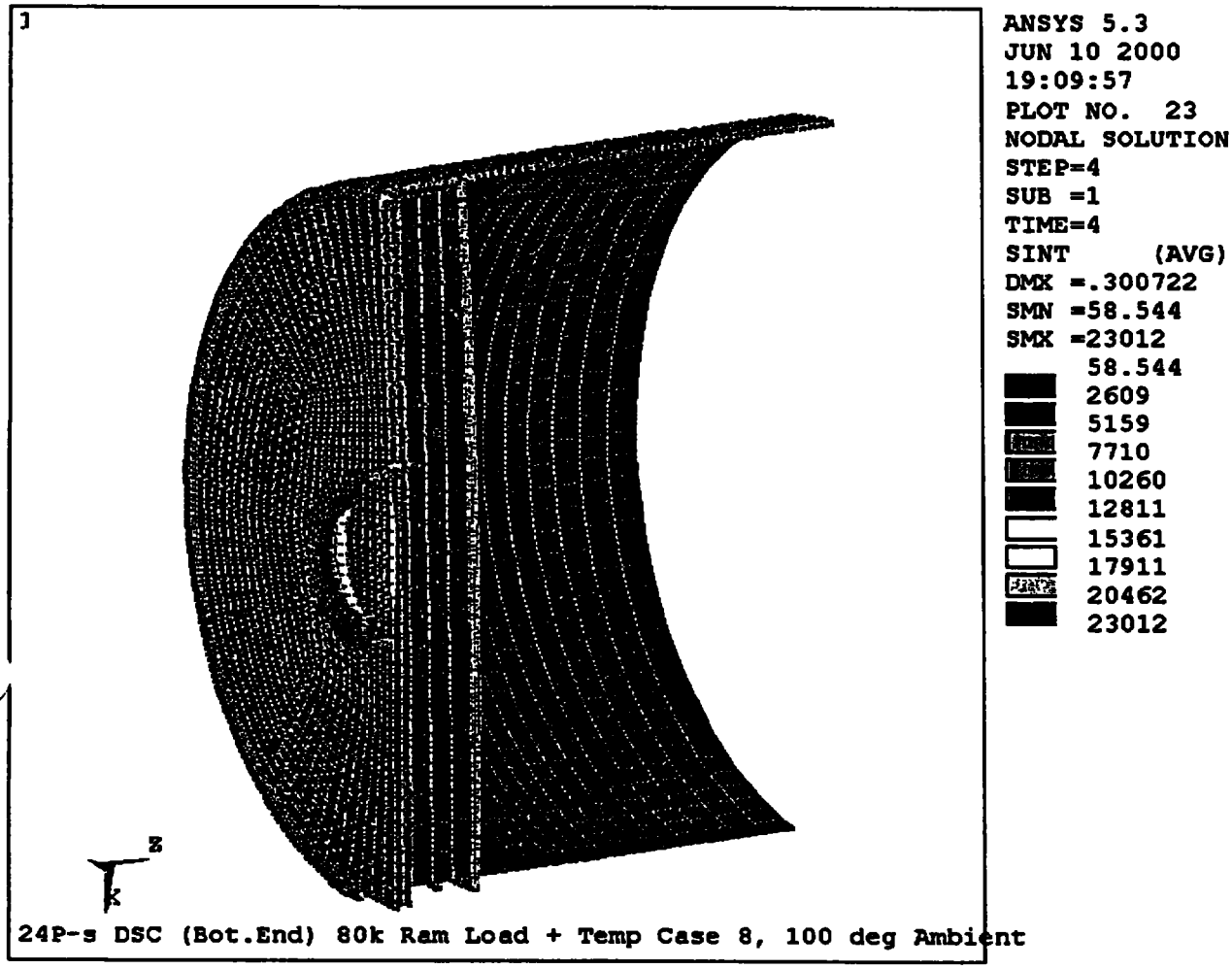

Figure B32-4

24P-FO DSC Shell Assembly, Bottom End Components

Stress Intensity Contour

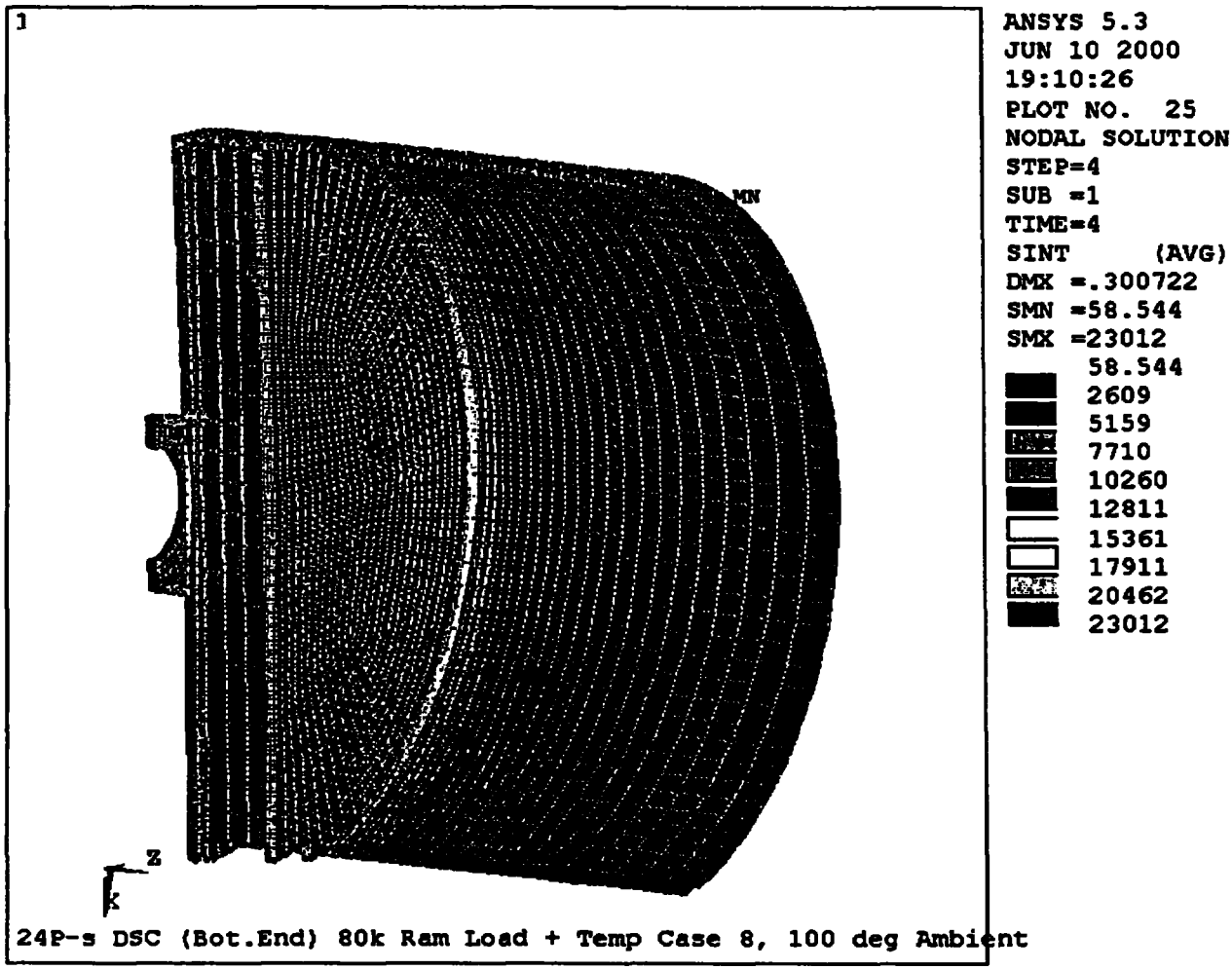

Figure B32-5

24P-FO DSC Shell Assembly, Bottom End Components

Stress Intensity Contour

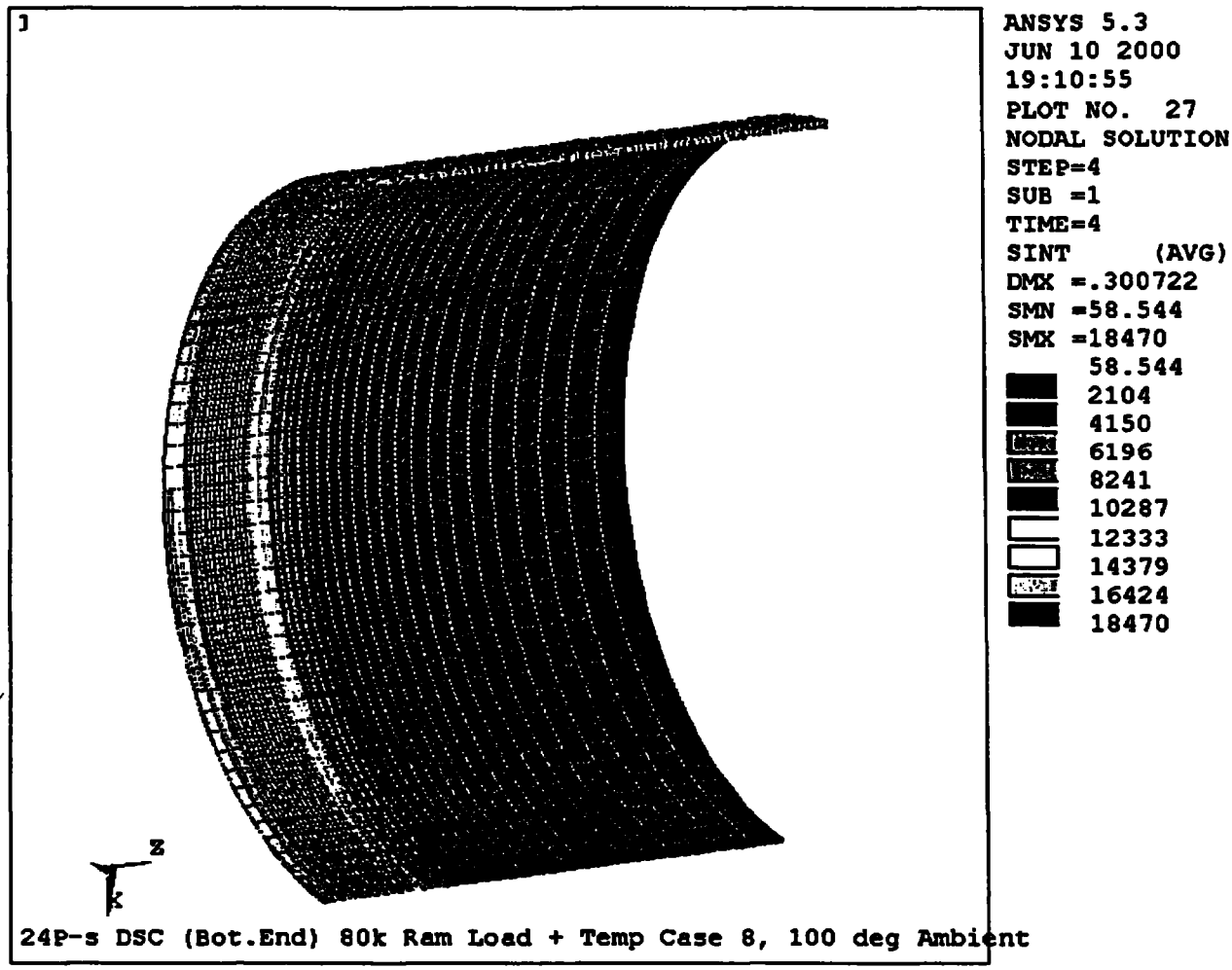

Figure B32-6

24P-FO DSC Shell Assembly, Cylindrical Shell (Bottom Half)

Stress Intensity Contour

Appendix B33

ANSYS Stress Intensity Contour Plots for Run PB24THR2

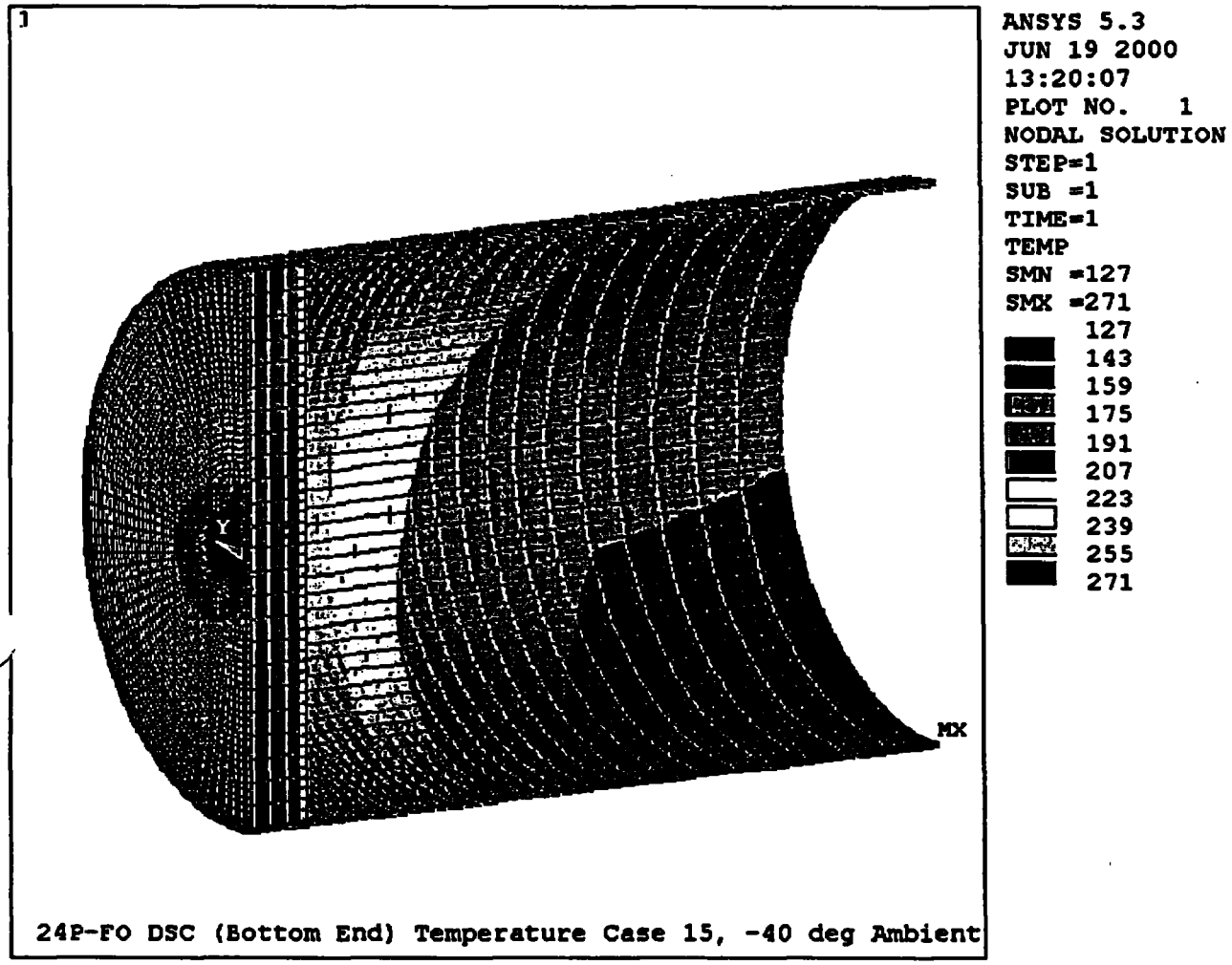

Figure B33-1

24P-FO DSC Shell Assembly, Bottom End Components

Thermal Contour

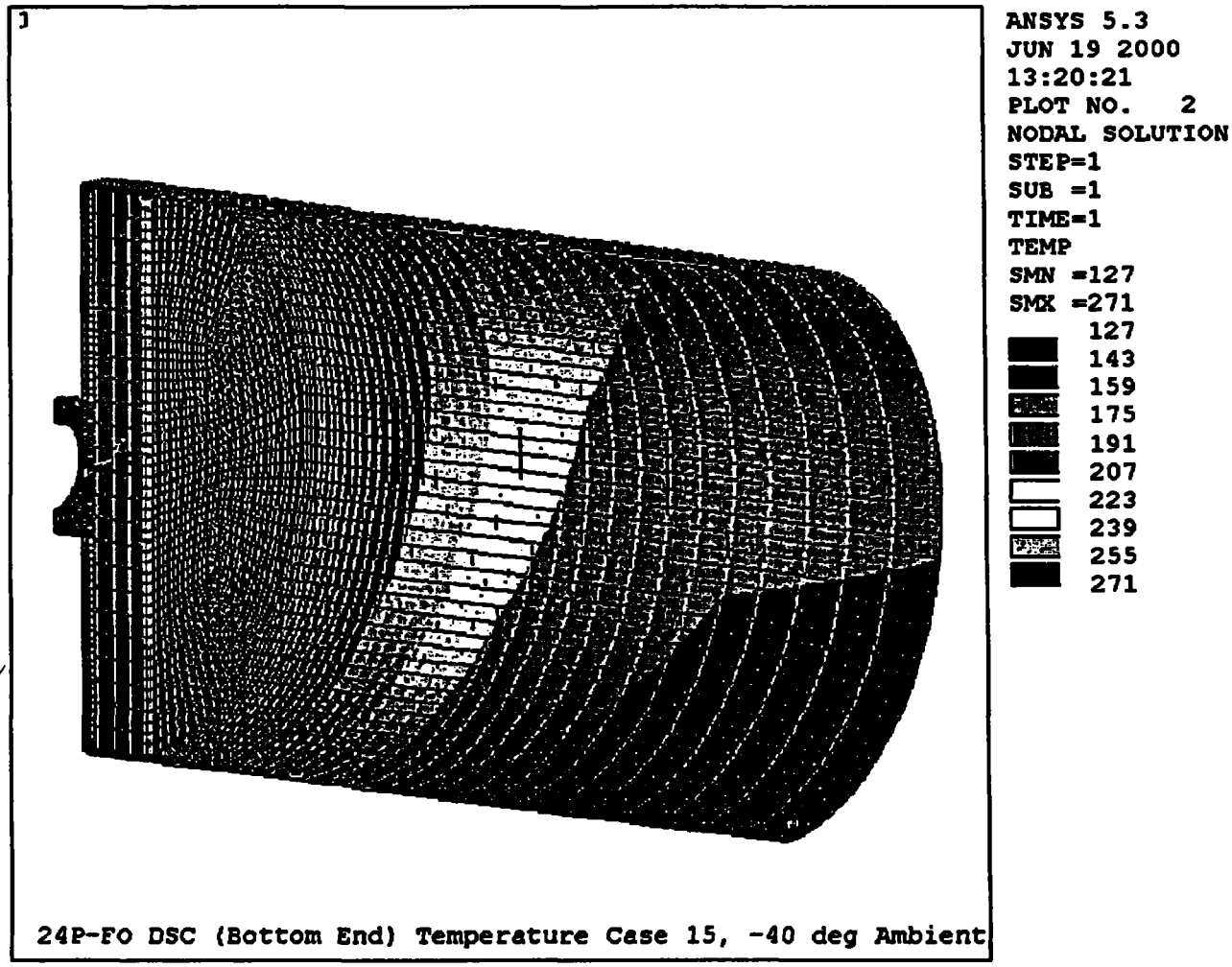

Figure B33-2

24P-FO DSC Shell Assembly, Bottom End Components

Thermal Contour

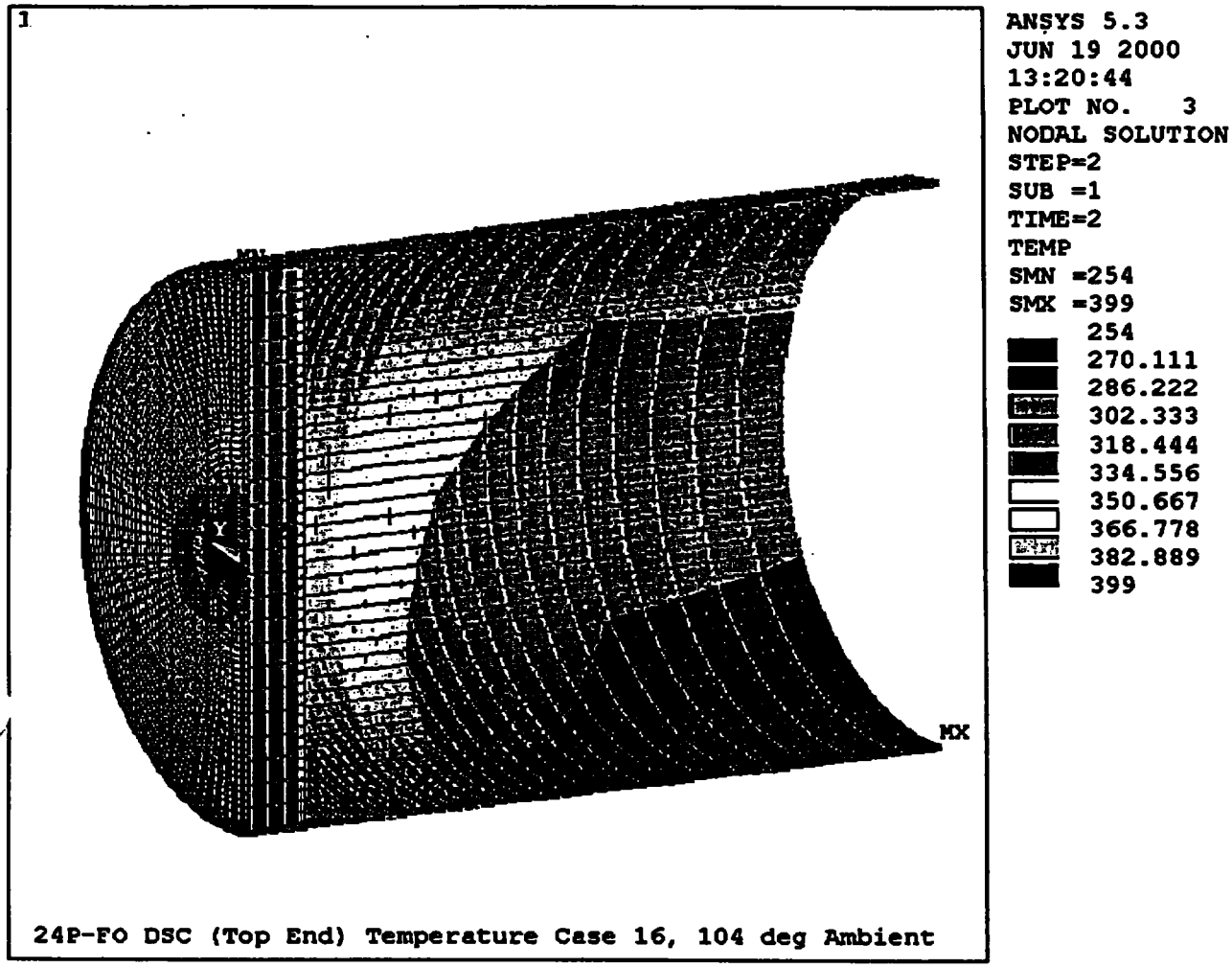

Figure B33-3

24P-FO DSC Shell Assembly, Bottom End Components

Thermal Contour

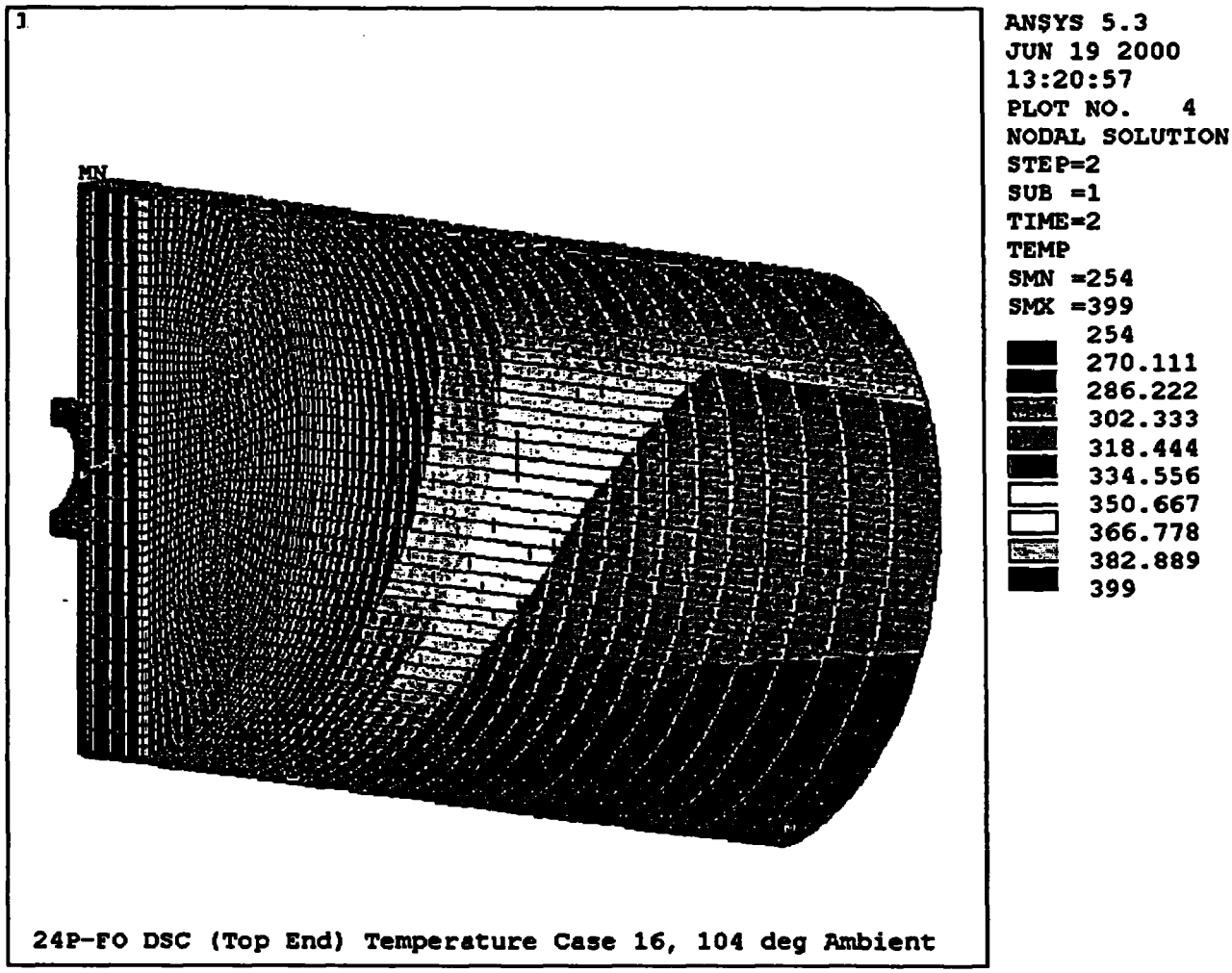

Figure B33-4

24P-FO DSC Shell Assembly, Bottom End Components

Thermal Contour

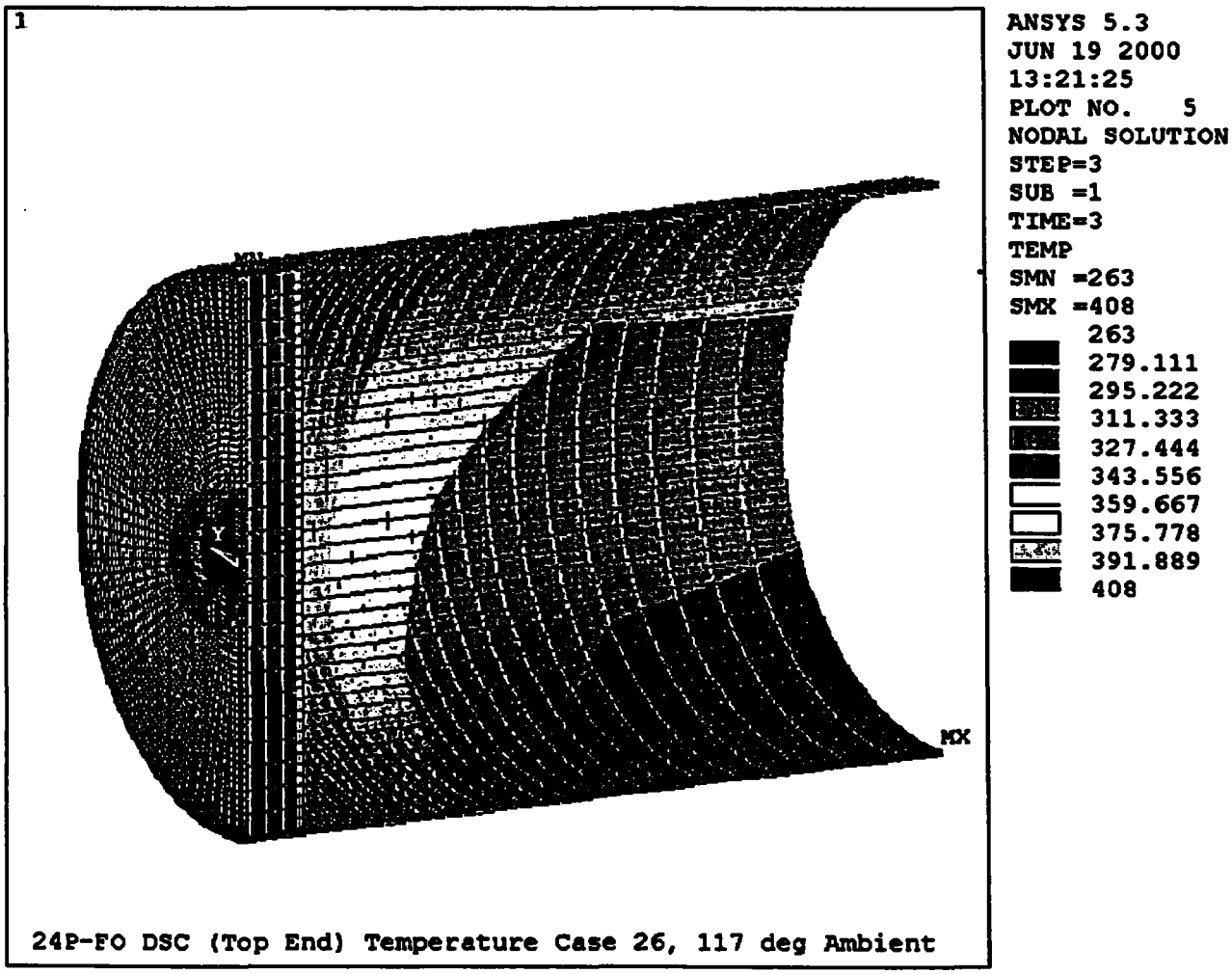

Figure B33-5

24P-FO DSC Shell Assembly, Bottom End Components

Thermal Contour

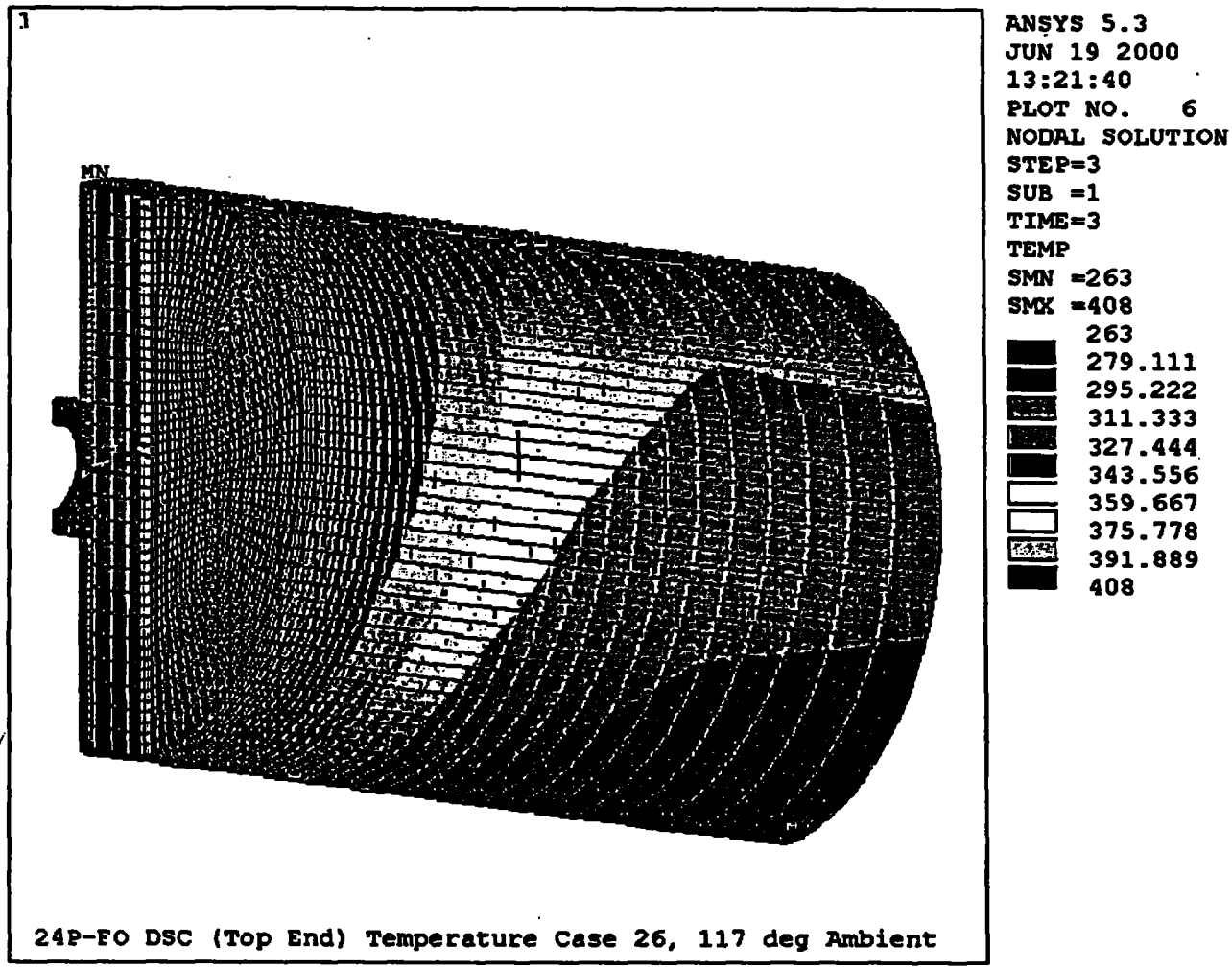

Figure B33-6

24P-FO DSC Shell Assembly, Bottom End Components

Thermal Contour

Appendix B34

ANSYS Stress Intensity Contour Plots for Run PB24PED

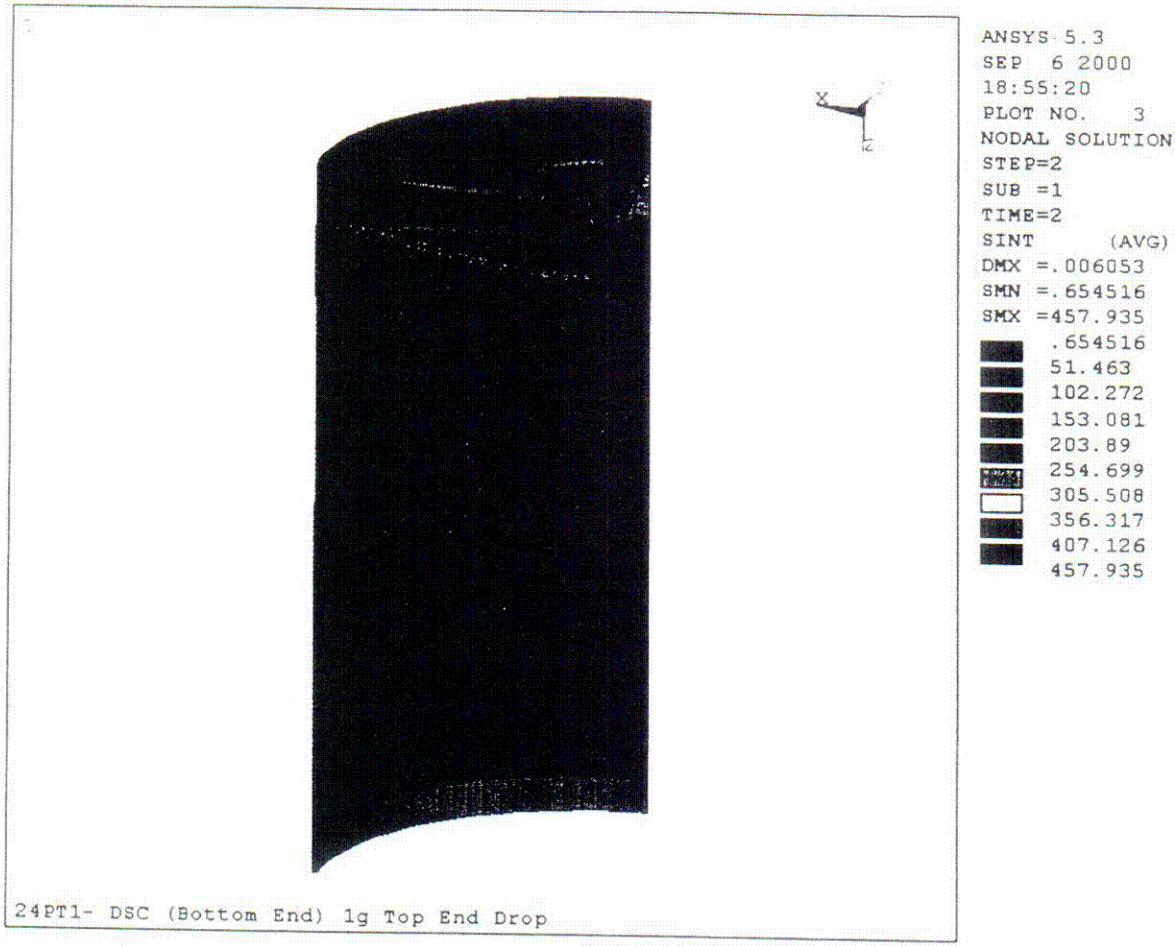

Figure B34-1

24P-FO DSC Shell Assembly, Bottom End Components

Stress Intensity Contour

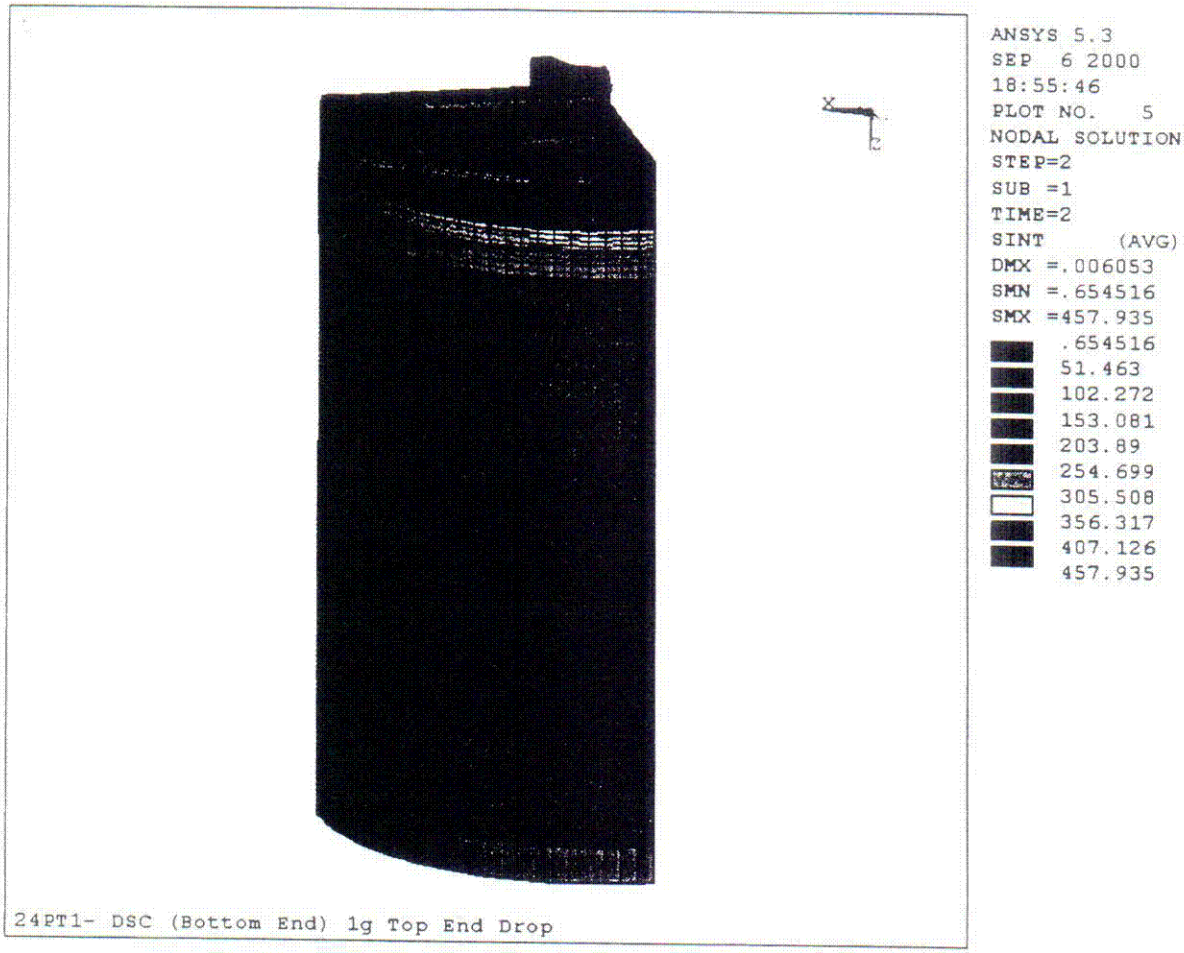

Figure B34-2

24P-FO DSC Shell Assembly, Bottom End Components

Stress Intensity Contour

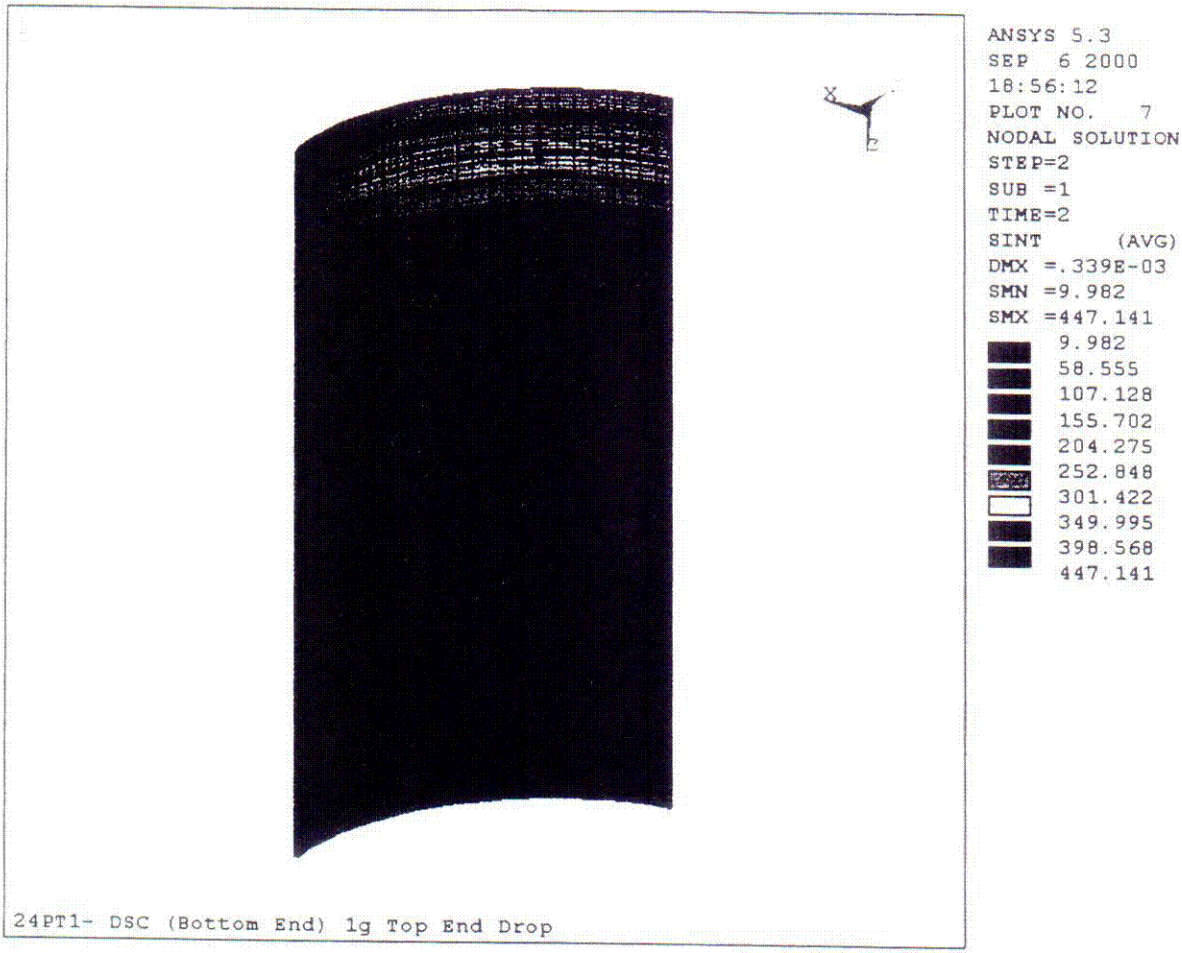

Figure B34-3

24P-FO DSC Shell Assembly, Cylindrical Shell (Bottom Half)

Stress Intensity Contour

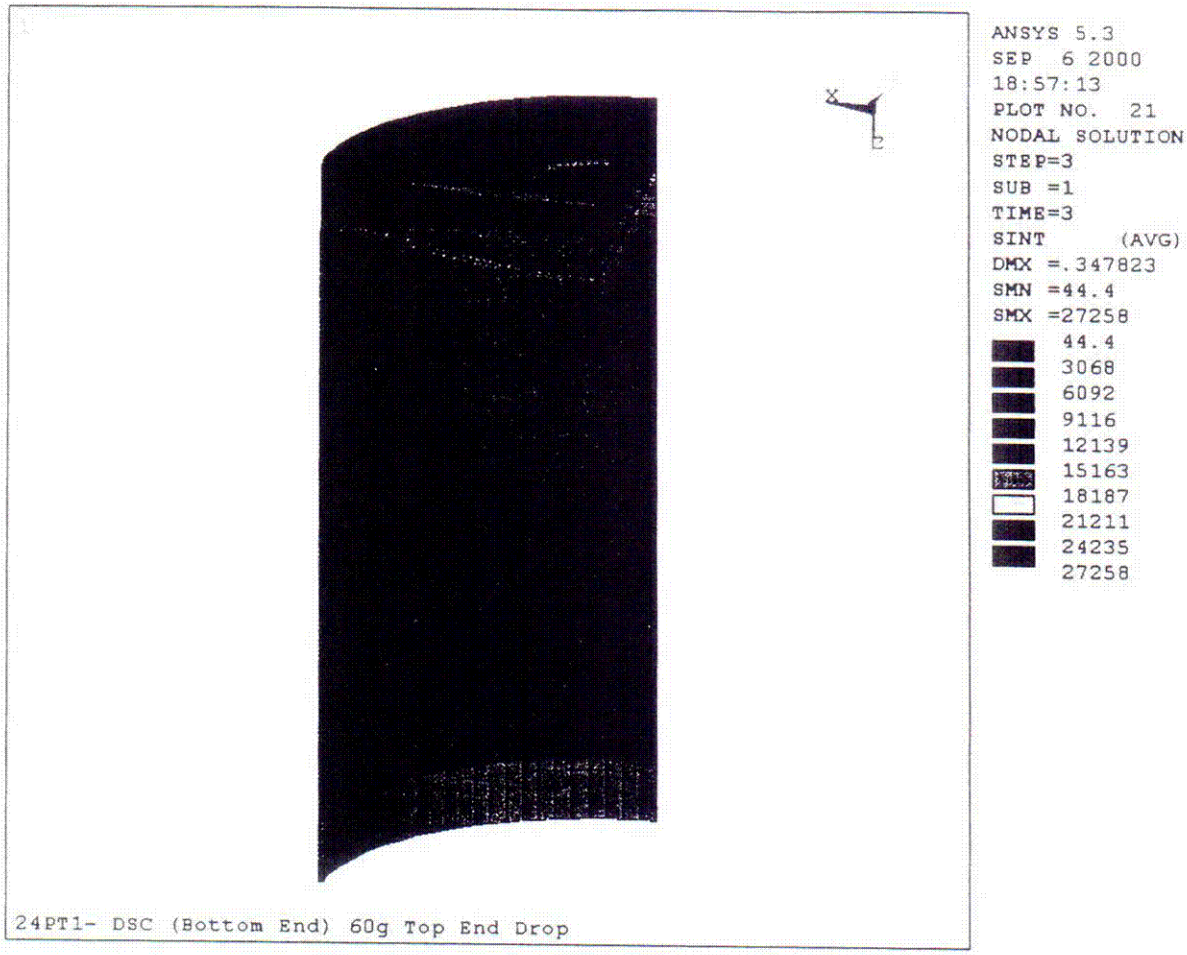

Figure B34-4

24P-FO DSC Shell Assembly, Bottom End Components

Stress Intensity Contour

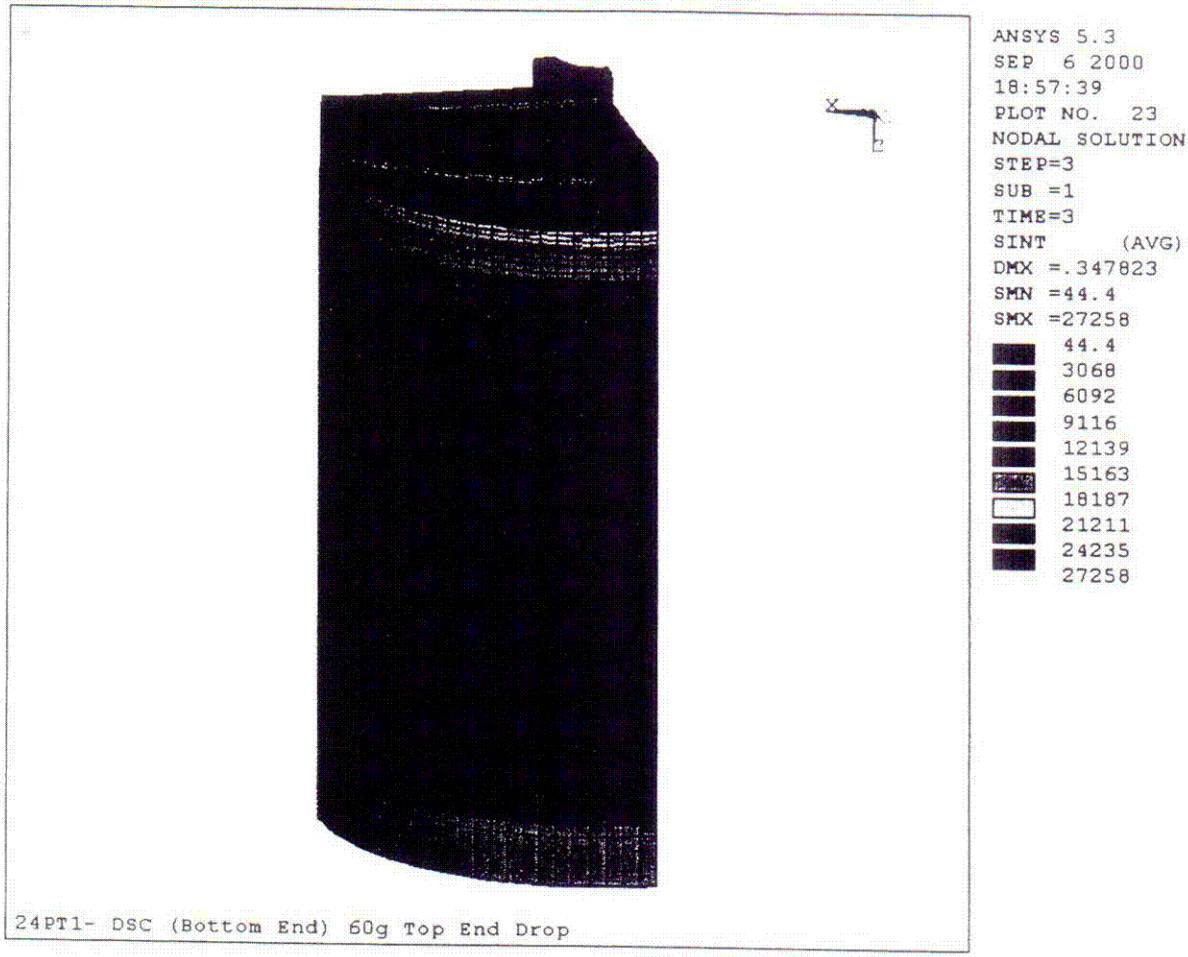

Figure B34-5

24P-FO DSC Shell Assembly, Bottom End Components

Stress Intensity Contour

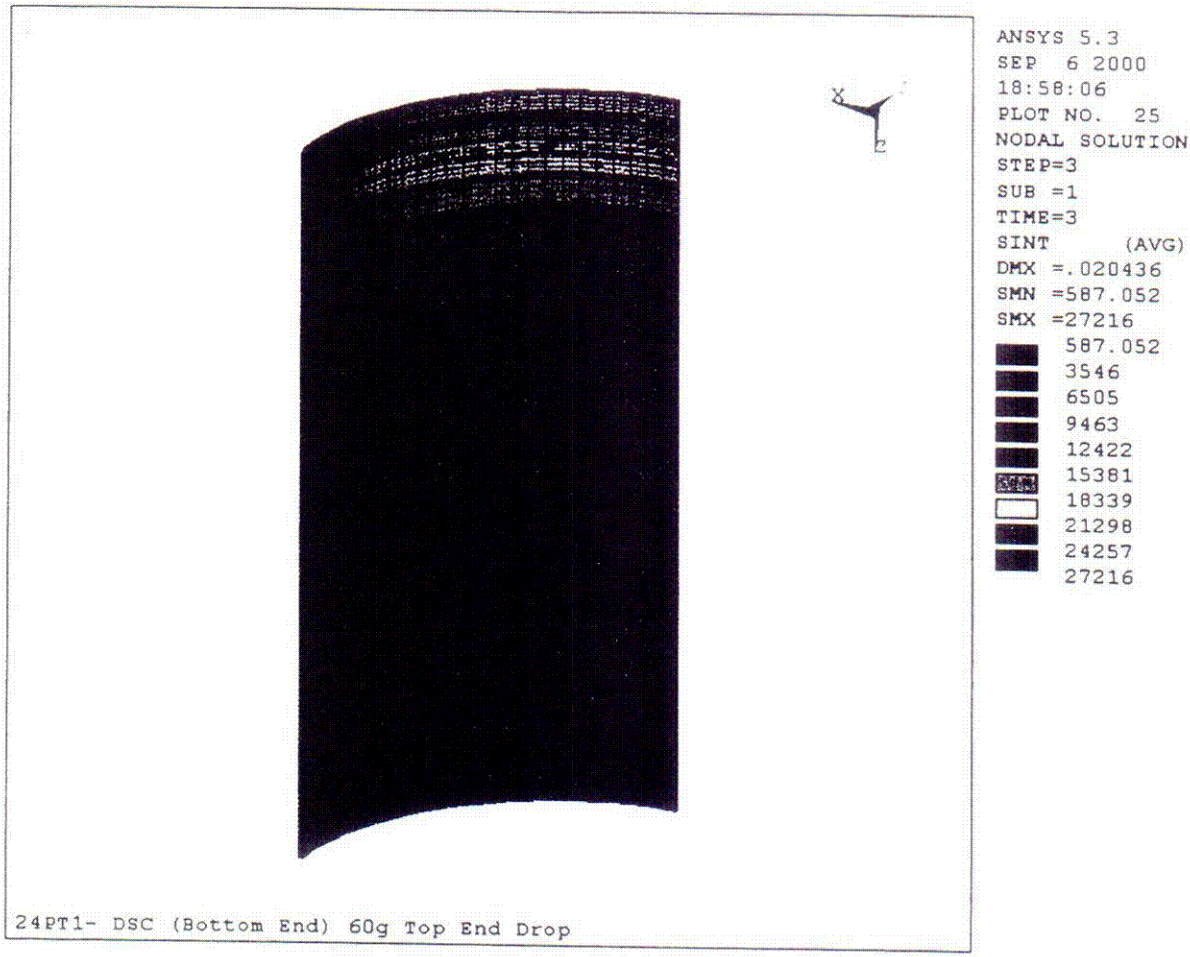

Figure B34-6

24P-FO DSC Shell Assembly, Cylindrical Shell (Bottom Half)

Stress Intensity Contour

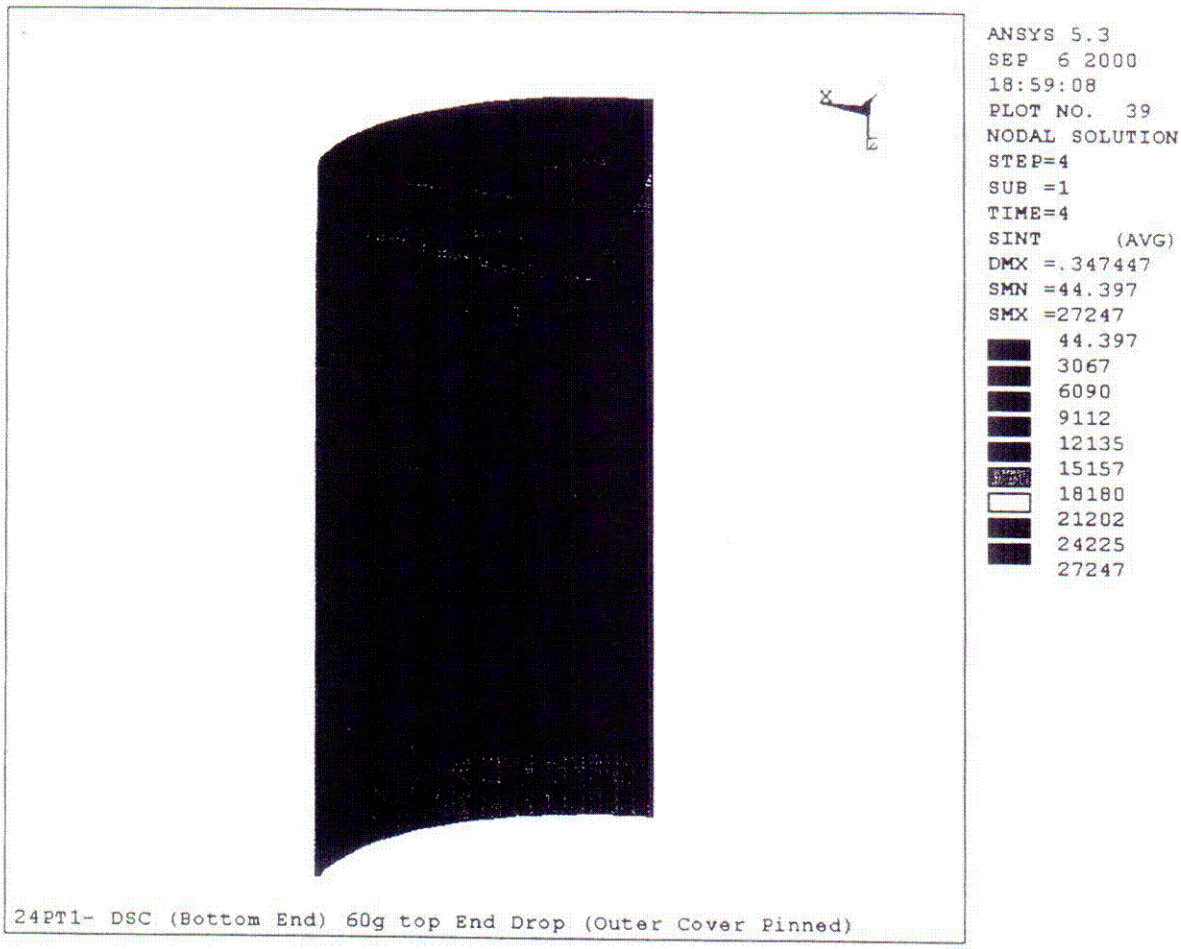

Figure B34-7

24P-FO DSC Shell Assembly, Bottom End Components

Stress Intensity Contour

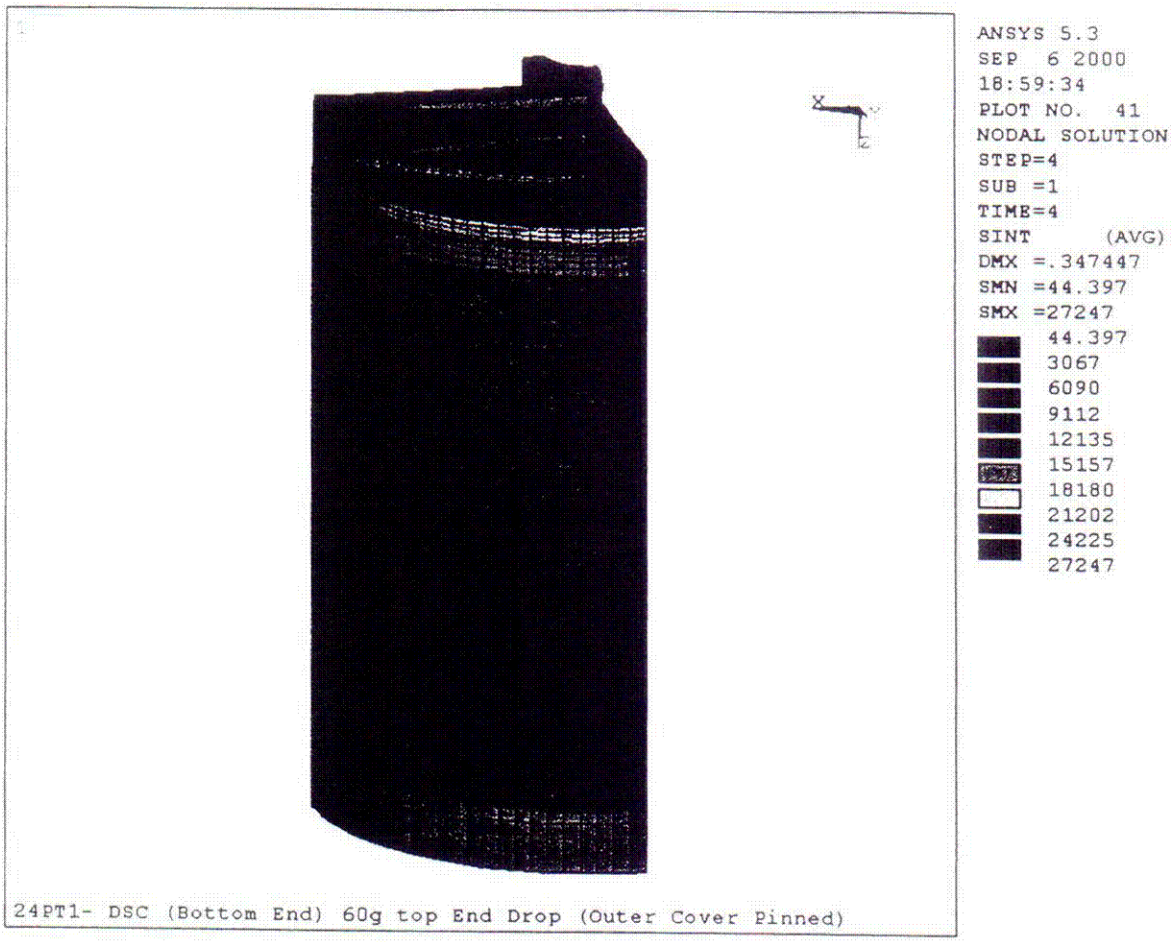

Figure B34-8

24P-FO DSC Shell Assembly, Bottom End Components

Stress Intensity Contour

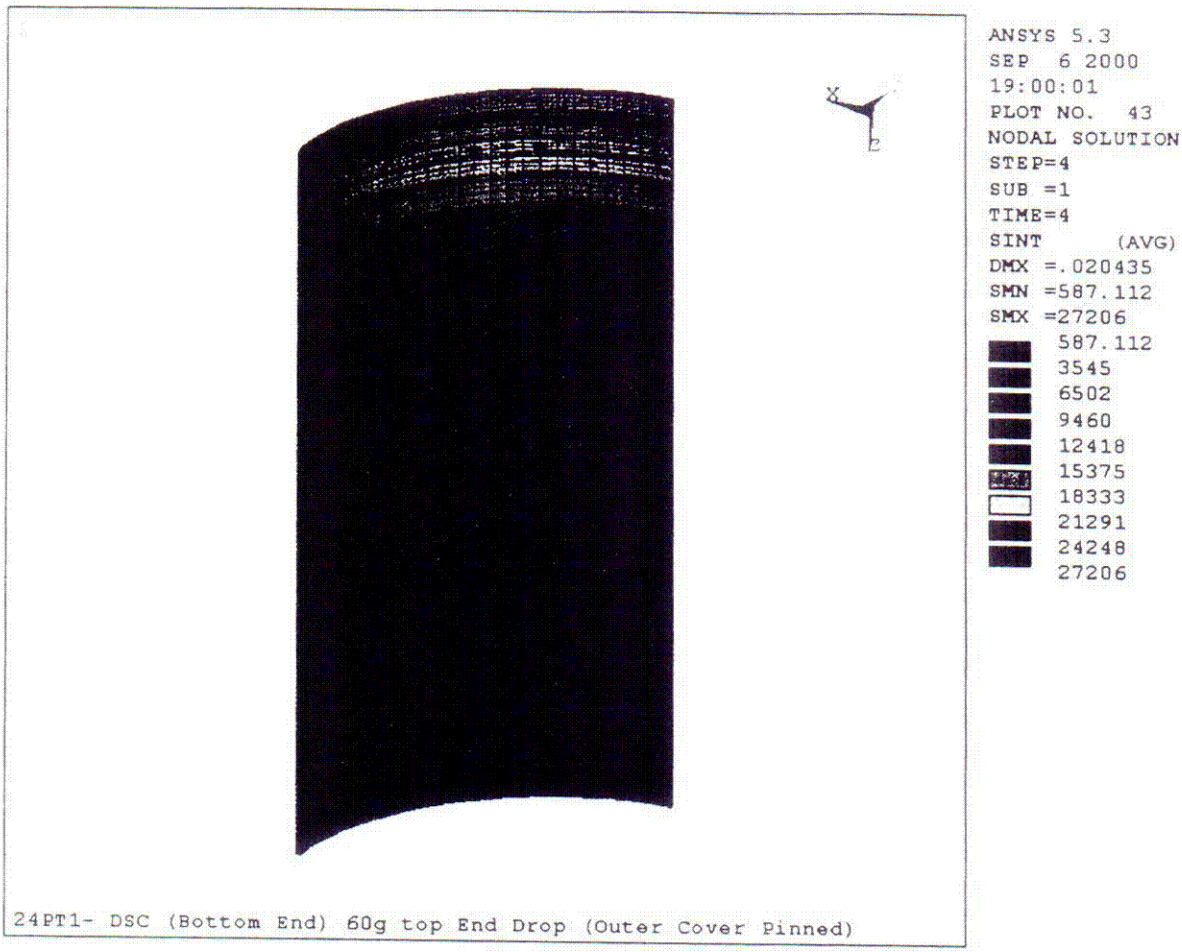

Figure B34-9

24P-FO DSC Shell Assembly, Cylindrical Shell (Bottom Half)

Stress Intensity Contour

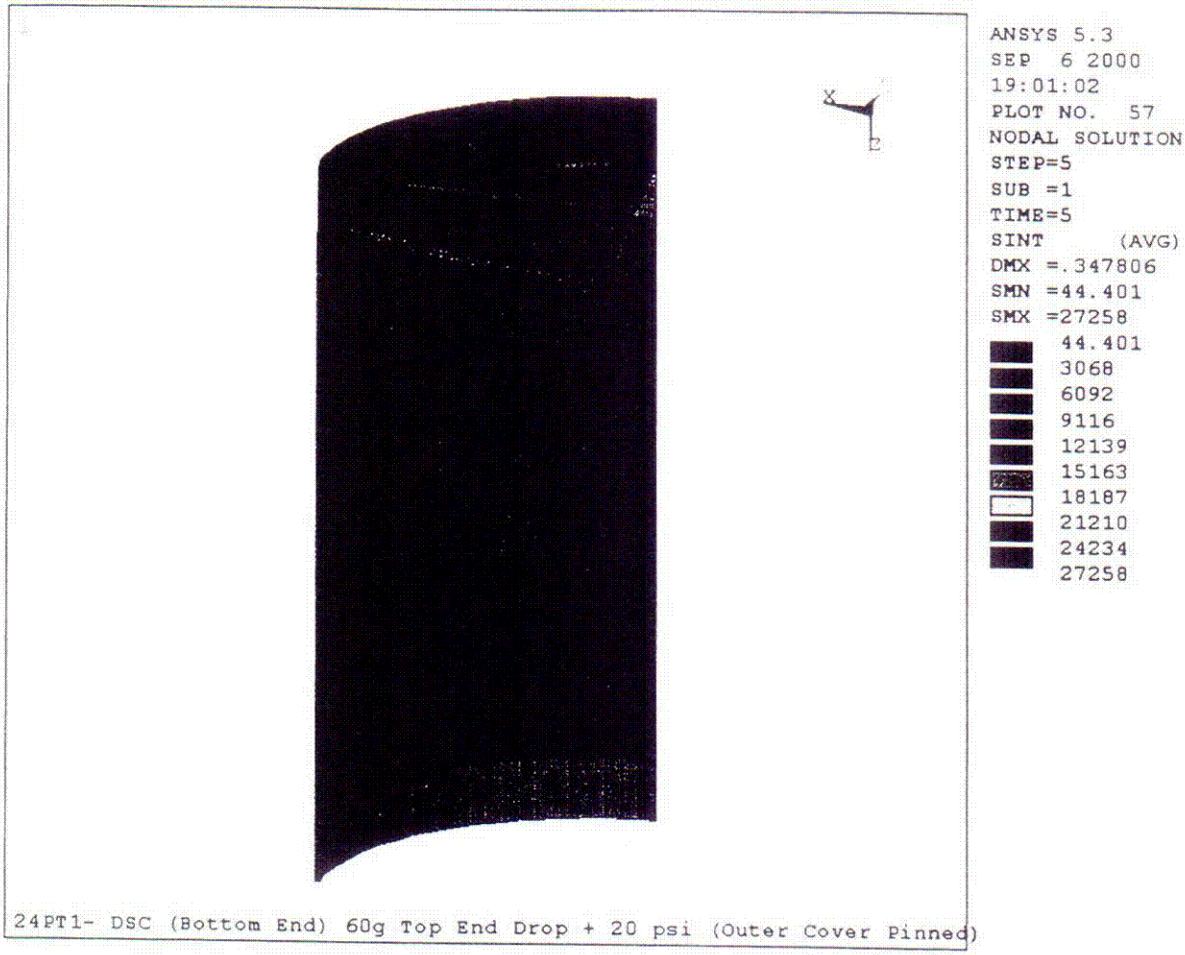

Figure B34-10

24P-FO DSC Shell Assembly, Bottom End Components

Stress Intensity Contour

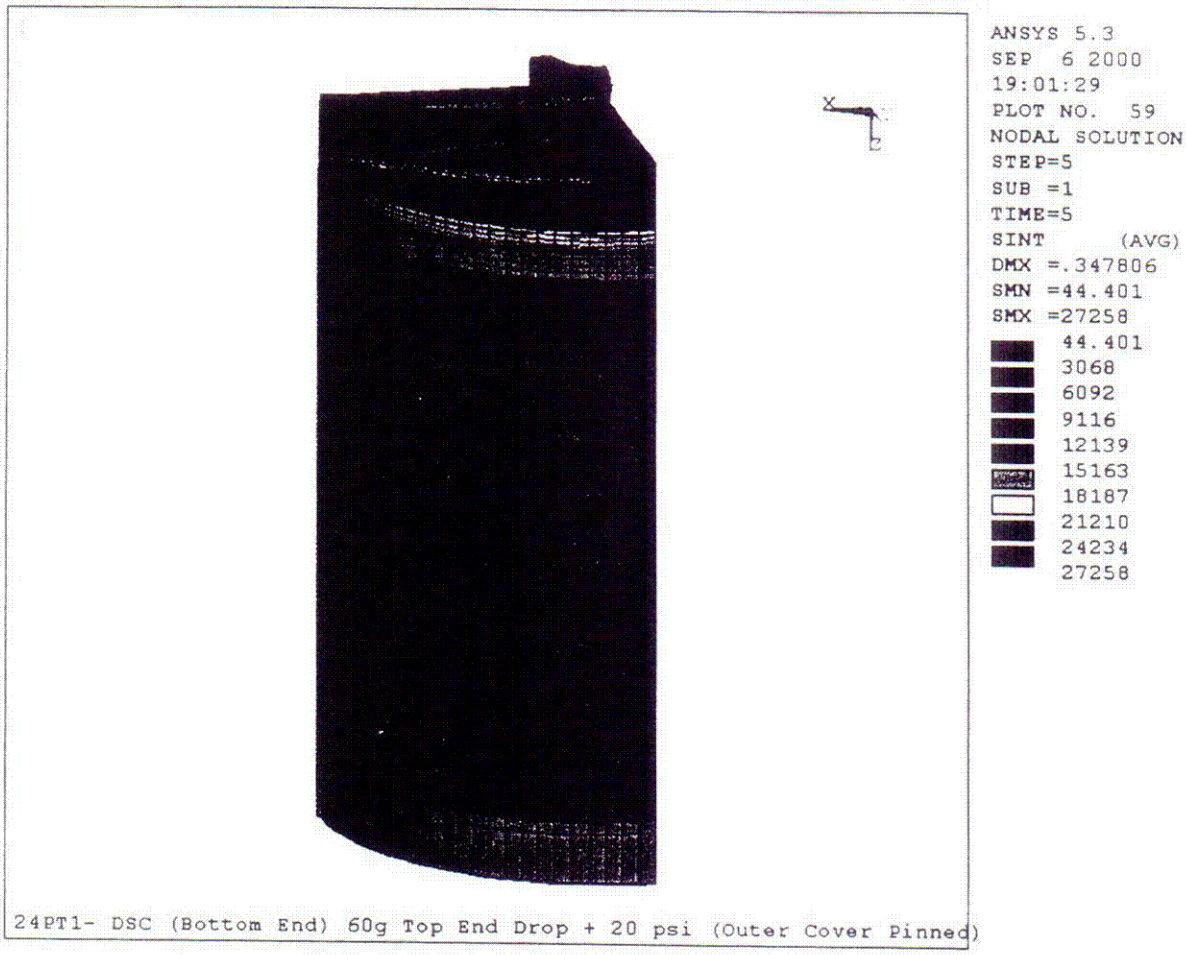

Figure B34-11

24P-FO DSC Shell Assembly, Bottom End Components

Stress Intensity Contour

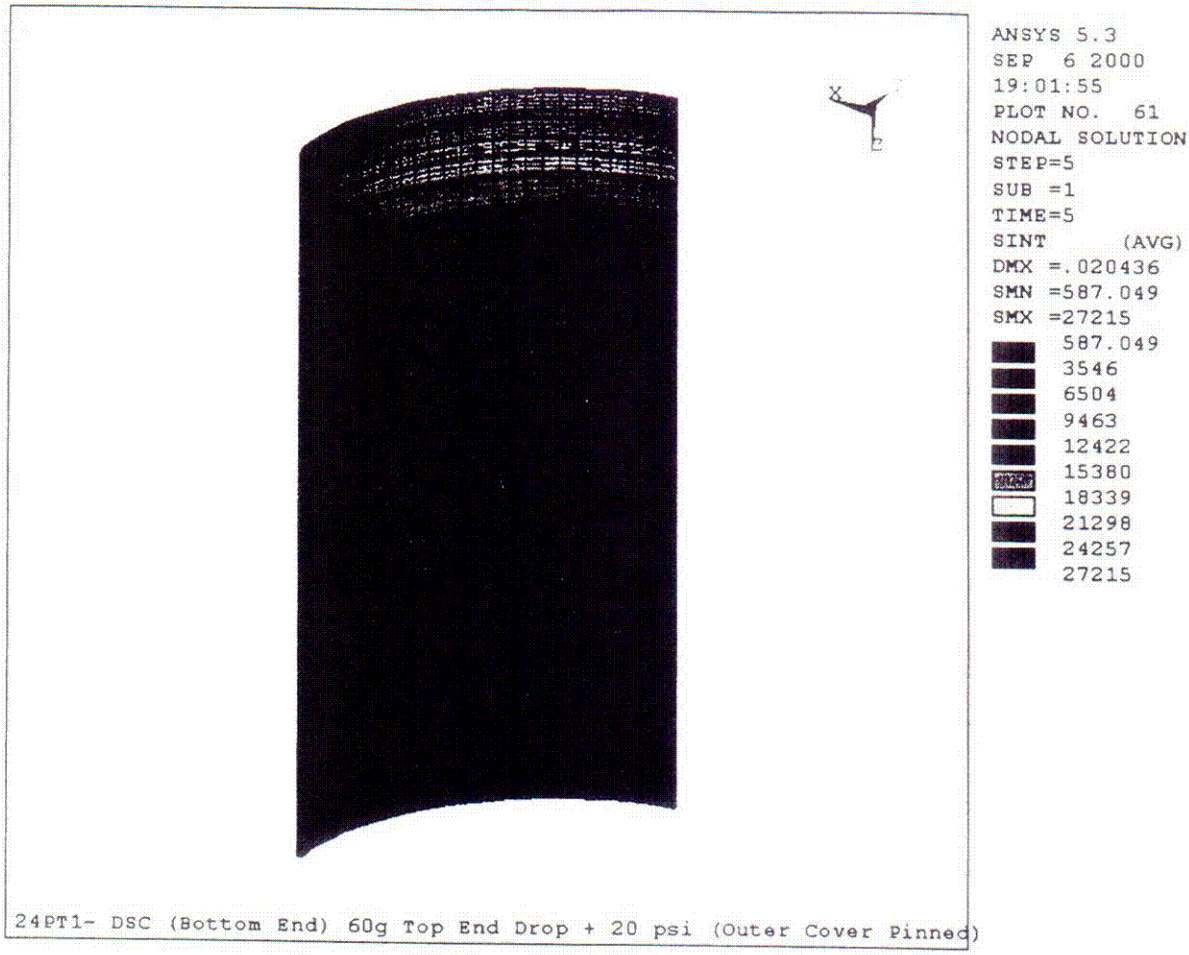

Figure B34-12

24P-FO DSC Shell Assembly, Cylindrical Shell (Bottom Half)

Stress Intensity Contour

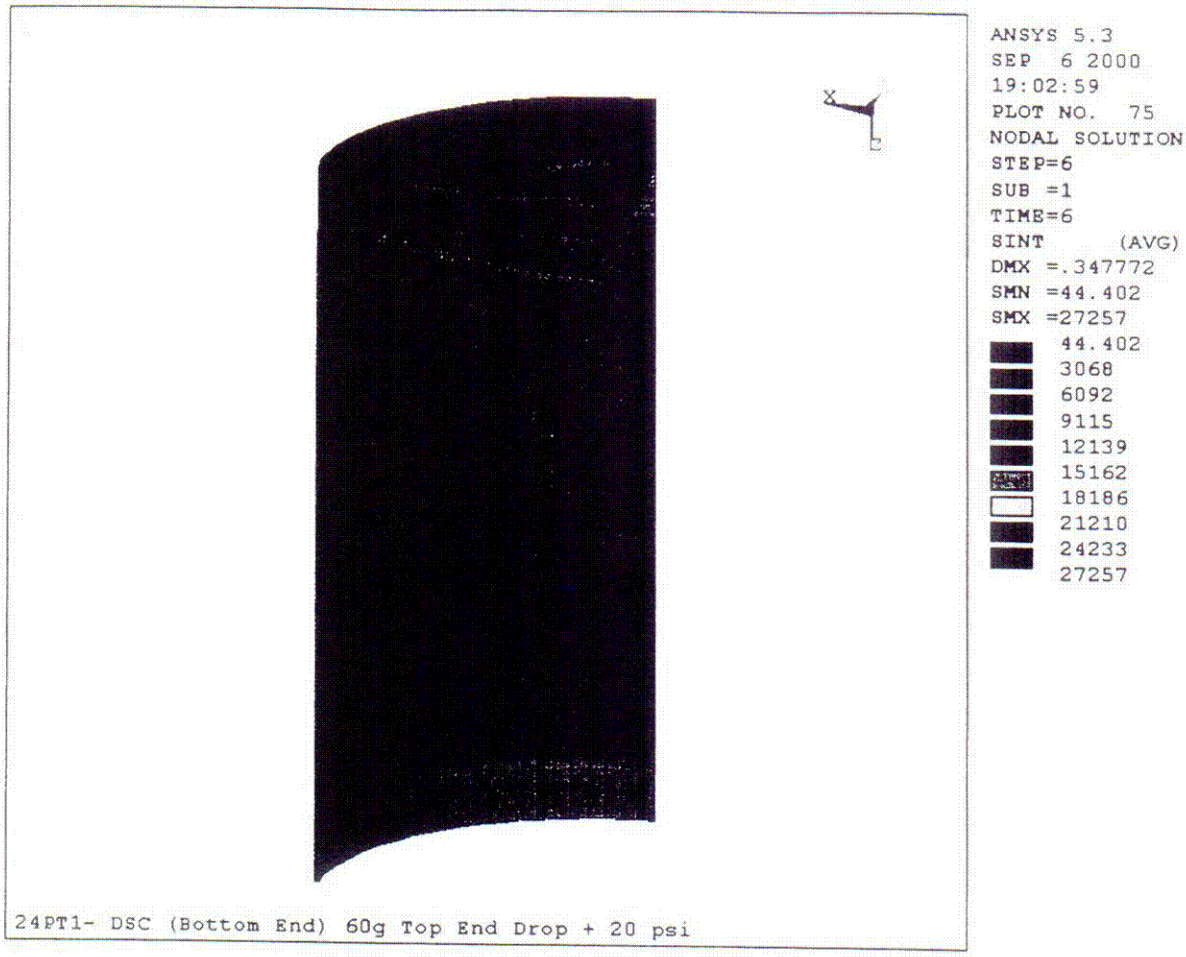

Figure B34-13

24P-FO DSC Shell Assembly, Bottom End Components

Stress Intensity Contour

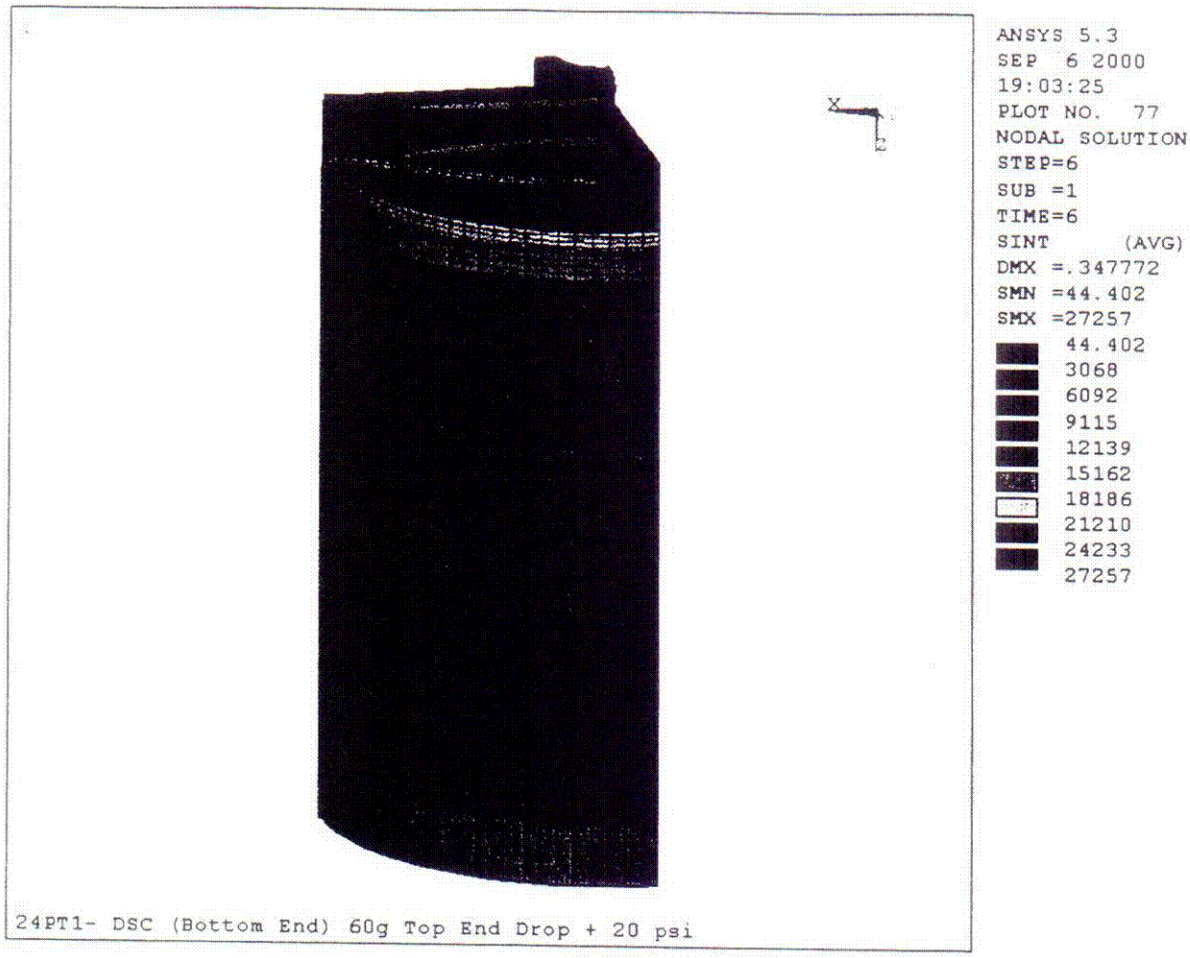

Figure B34-14

24P-FO DSC Shell Assembly, Bottom End Components

Stress Intensity Contour

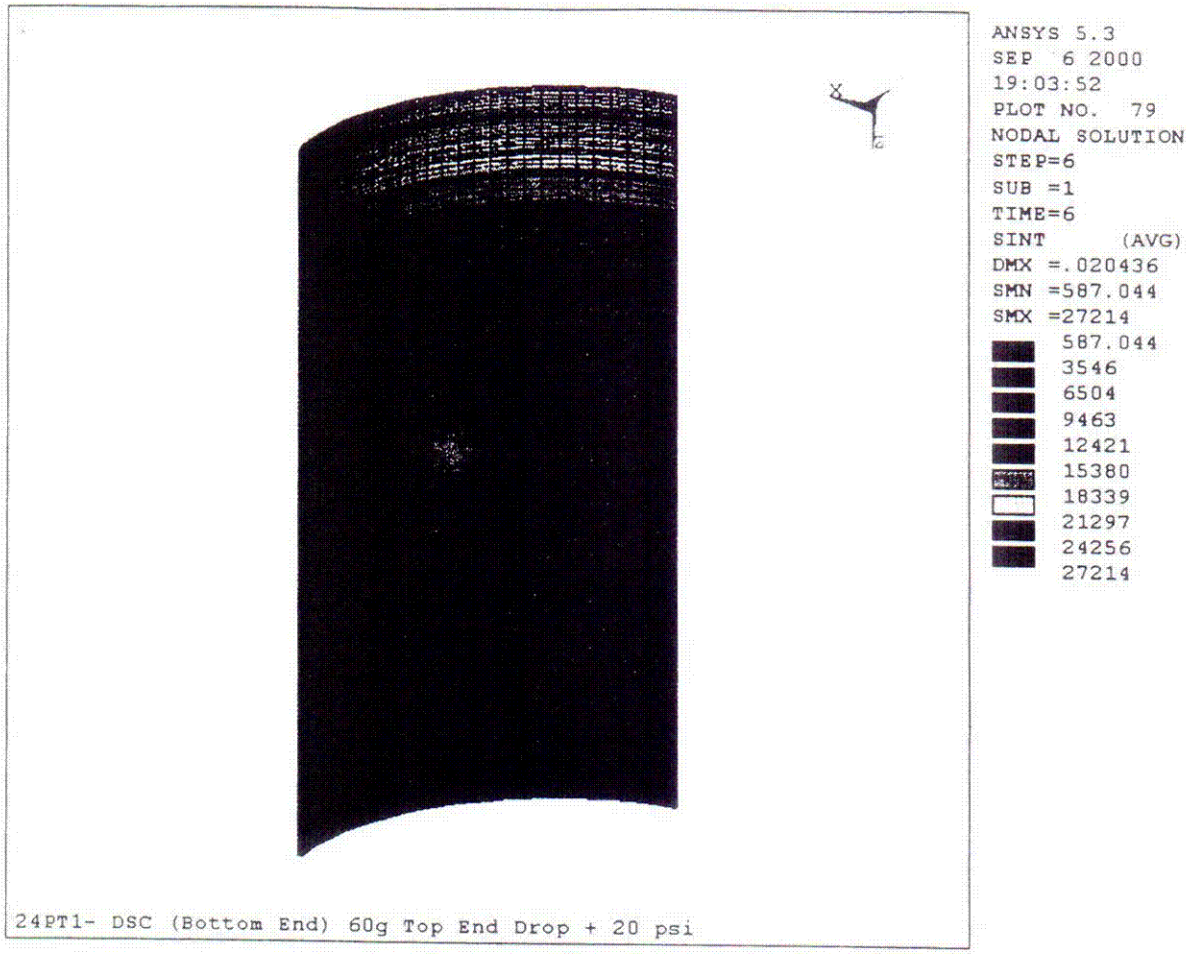

Figure B34-15

24P-FO DSC Shell Assembly, Cylindrical Shell (Bottom Half)

Stress Intensity Contour

Appendix C

ANSYS Run Descriptions

Bold indicates post processed.

1. QT24PIP (TOP MODEL INTERNAL PRESSURE INNER PRESSURE BOUNDARY)
    1. .0005 psi internal pressure shell and inner cover plate
    2. 10 psi internal pressure on shell and inner cover plate
    3. pin outer cover plate weld
    4. 20 psi internal pressure on shell and inner cover plate
    5. unpin outer cover plate weld
    6. 60 psi internal pressure on shell and inner cover plate
    7. Pin outer cover plate weld

2. QT24PFL (TOP MODEL—EXTERNAL FLOOD PRESSURE, INTERNAL PRESSURE)
    1. .0005 psi external pressure shell and outer cover plate
    2. 22 psi external pressure shell and outer cover plate
    3. pin outer cover plate weld
    4. Add 10 psi internal pressure on shell and inner cover plate
    5. Unpin outer cover plate weld

3. QT24PED (TOP MODEL 60G END DROP, INTERNAL PRESSURE)
    1. .001g bottom end drop
    2. 1g bottom end drop
    3. 60g bottom end drop
    4. pin outer cover plate weld
    5. add 20 psi internal pressure
    6. unpin outer cover plate weld

4. QT24P1G (1G AXIAL OUTWARD ACCELERATION, FUEL INTERNAL PRESSURE)
    1. 0.001g axial acceleration
    2. 1g axial acceleration
    3. Pin outer cover

5. T24PDW (DEADWEIGHT ACCELERATION ON HORIZONTAL DSC)
    1. 1g/20 vertical load, horizontal DSC on rail
    2. 1g vertical load, horizontal DSC on rail
    3. pin outer cover plate weld

6. T24THERM (STEADY STATE THERMAL SOLUTION)
    1. Thermal Case 15 (AHSM -40°F).
    2. Thermal Case 16 (AHSM 104°F).
    3. Thermal Case 26 (AHSM 117°F).

7. T24PSD (75G SIDE DROP)
   1. 75g/2000 side drop on rail w/ plasticity and nlgeom
   2. 75g/10 side drop on rail w/ plasticity and nlgeom
   3. 75g side drop on rail w/ plasticity and nlgeom
   4. pin outer cover plate weld

8. T24PSDP (75G SIDE DROP WITH INTERNAL PRESSURE)
   1. (1g+20psi)/2000 side drop on rail w/ plasticity and nlgeom
   2. 1g+20psi side drop on rail w/ plasticity and nlgeom
   3. 7.5g+20psi side drop on rail w/ plasticity and nlgeom
   4. 75g+20psi side drop on rail w/ plasticity and nlgeom
   5. pin outer cover plate weld

9. T24PTH (THERMAL CASES)
   1. Temperature Case 7, -40 deg Ambient
   2. Temperature Case 8, 100 deg Ambient
   3. Temperature Case 15; -40 deg Ambient
   4. Temperature Case 16, 104 deg Ambient

10. T24PTH2 (THERMAL CASES)
   1. Temperature Case 26, 117 deg Ambient

11. T24PTHP (THERMAL CASES + INTERNAL PRESSURE)
   1. Nonlinear Pressure Start, 1 psi
   2. Temperature Case 7, -40 deg Ambient + 10 psi
   3. Temperature Case 8, 100 deg Ambient + 10 psi
   4. Temperature Case 15, -40 deg Ambient + 10 psi
   5. Temperature Case 16, 100 deg Ambient + 10 psi

12. T24PTP2 (THERMAL CASES + INTERNAL PRESSURE)
   1. Nonlinear Pressure Start, 1 psi
   2. Temperature Case 8, 100 deg Ambient + 10 psi
   3. Temperature Case 15, -40 deg Ambient + 10 psi
   4. Temperature Case 16, 104 deg Ambient + 10 psi

13. T24PTP3 (THERMAL CASES + INTERNAL PRESSURE)
   1. Nonlinear Pressure Start, 1 psi
   2. Temperature Case 26, 117 deg Ambient + 10 psi

14. B24PLT (LEAK TEST PRESSURE AND AXIAL LOAD)
   1. 155k axial + 14.7 psi ext. pressure on shell and inner cover

15. QB24PIP (BOTTOM MODEL INTERNAL PRESSURE INNER PRESSURE BOUNDARY)

1. .0005 psi internal pressure shell and inner cover plate
2. 10 psi internal pressure on shell and inner cover plate
3. pin outer cover plate weld
4. 60 psi internal pressure on shell and inner cover plate
5. Pin outer cover plate weld

16. QB24PFL (BOTTOM MODEL—EXTERNAL FLOOD PRESSURE, INTERNAL PRESSURE)

1. .0005 psi external pressure shell and outer cover plate
2. 22 psi external pressure shell and outer cover plate
3. pin outer cover plate weld
4. Add 10 psi internal pressure on shell and inner cover plate
5. Unpin outer cover plate weld

17. QB24P1G (1G AXIAL OUTWARD ACCELERATION, FUEL INTERNAL PRESSURE)

1. 0.001g axial acceleration
2. 1g axial acceleration
3. Pin outer cover

18. B24PDW (DEADWEIGHT ACCELERATION ON HORIZONTAL DSC)

1. 1g vertical load, horizontal DSC on rail
2. pin outer cover plate weld

19. B24THERM (STEADY STATE THERMAL SOLUTION)

4. Thermal Case 15 (AHSM -40°F).
5. Thermal Case 16 (AHSM 104°F).
6. Thermal Case 26 (AHSM 117°F).

20. B24PSID2 (75G SIDE DROP)

1. 75g side drop on rail w/ plasticity and nlgeom
2. pin outer cover plate weld

21. B24PSID3 (75G SIDE DROP)

1. (75g+20psi)/2000 side drop on rail w/ plasticity and nlgeom
2. (75g+20psi)/10 side drop on rail w/ plasticity and nlgeom
3. 75g+20psi side drop on rail w/ plasticity and nlgeom
4. pin outer cover plate weld

22. B24PTH (THERMAL CASES)

1. Temperature Case 7, -40 deg Ambient
2. Temperature Case 8, 100 deg Ambient
3. Temperature Case 15, -40 deg Ambient
4. Temperature Case 16, 104 deg Ambient

23. B24PTH2 (THERMAL CASES)

1. Temperature Case 26, 117 deg Ambient

24. B24PGP1 (GRAPPLE PULL LOADS)

1. 60 kip tension load at grapple ring
2. 80 kip tension at grapple ring

25. B24PGP2 (GRAPPLE PULL)

1. 60 kip tension load at grapple ring w/ far end restr.
2. 80 kip tension at grapple ring w/ far end restr.
3. Add 20 psi to outer cover plate

26. B24PGP3 (GRAPPLE PULL)

1. 60 kip tension load at grapple ring w/ far axisymmetric restr.

27. B24PTHG (GRAPPLE PULL + THERMAL LOAD CASES)

1. 60 kip grapple load
2. 60 kip grapple load + temp case 15, -40 deg ambient
3. 60 kip grapple load + temp case 16, 104 deg ambient
4. 60 kip grapple load + temp case 26, 117 deg ambient

28. B24PT-G (-GRAPPLE PULL + THERMAL LOAD CASES)

1. -60 kip grapple load + temp case 15, -40 deg ambient
2. -60 kip grapple load + temp case 16, 104 deg ambient
3. -60 kip grapple load + temp case 26, 117 deg ambient

29. B24PRAM (RAM PUSH LOADS)

1. 1 lb ram Compression load w/ far end restrained
2. 60 kip ram Compression load w/ far end restrained
3. 80 kip ram Compression load w/ far end restrained

30. B24PTHR (RAM PUSH LOADS + THERMAL LOAD CASES)

1. 1 lb ram Compression load w/ far end restrained
2. 1 lb ram Compression load w/ axisymmetric far end restrained
3. 60 kip grapple load + temp case 7, -40 deg ambient
4. 60 kip grapple load + temp case 8, 104 deg ambient

31. B24PTR2 (RAM PUSH LOADS + THERMAL LOAD CASES)

1. 1 lb ram Compression load w/ far end restrained
2. 60 kip ram Compression load w/ far end restrained
3. 60 kip grapple load + temp case 7, -40 deg ambient
4. 60 kip grapple load + temp case 8, 104 deg ambient

32. B24PTR3 (RAM PUSH LOADS + THERMAL LOAD CASES)

1. 1 lb ram Compression load w/ far end restrained
2. 80 kip ram Compression load w/ far end restrained
3. 80 kip grapple load + temp case 7, -40 deg ambient
4. 80 kip grapple load + temp case 8, 104 deg ambient

33. B24THER2 (STEADY STATE THERMAL SOLUTION) FOR FINE MESH

7. Thermal Case 15 (AHSM -40°F).
8. Thermal Case 16 (AHSM 104°F).
9. Thermal Case 26 (AHSM 117°F).

34. QT24PED (BOTTOM MODEL 60G END DROP, INTERNAL PRESSURE)

7. .001g top end drop
8. 1g top end drop
9. 60g top end drop
10. pin outer cover plate weld
11. add 20 psi internal pressure
12. unpin outer cover plate weld

Appendix D

Safety Analysis Report Tables

1. INTRODUCTION

This appendix presents the stress results from the structural analyses performed for the design of the SCE DSC. The results are summarized in tables which are formatted to correspond to the Safety Analysis Report (SAR) tables.

Table D1 through Table D2 are based on ANSYS® output summarized in calculation package SCE-01.0204 Table 9-5 through 9-17 for the selected DSC components. This does not include the stress intensities is the DSC shell for the 75g side drop load case (Table D-2) where the stress intensities listed are from calculation package SCE-01.0208. A description of the corresponding ANSYS® load steps is documented in Appendix C of SCE-01.0204.

Table D3 through Table D5 are based on Table 10-1 through Table 10-11 of calculation package SCE-01.0204 for the selected DSC components.

Table D-1 24PT1-DSC Normal and Off-Normal Operating Condition Stresses

Component	Stress Type	Stress Intensity (ksi)						
		Dead Weight		Normal Internal Pressure	Off-Normal Internal Pressure	Thermal	Normal Handling	Off-Normal Handling
		Vertical	Horiz.					
Shell	Primary Membrane	0.9	2.6	1.7	3.4	N/A	17.0	22.6
	Membrane + Bending	2.9	3.1	4.4	8.8	N/A	23.0	30.6
	Primary + Secondary	2.9	3.1	8.2	16.4	22.2	25.1	23.8
Outer Top Cover Plate	Primary Membrane	0.2	1.1	1.3	2.6	N/A	0.0(1)	0.0(1)
	Membrane + Bending	0.4	1.7	4.0	8.0	N/A	0.0(1)	0.0(1)
	Primary + Secondary	0.4	1.7	4.5	9.0	13.2	0.0(1)	0.0(1)
Inner Top Cover Plate	Primary Membrane	1.7	0.6	0.4	0.8	N/A	0.0(1)	0.0(1)
	Membrane + Bending	1.9	1.7	3.9	7.8	N/A	0.0(1)	0.0(1)
	Primary + Secondary	1.9	1.7	3.9	7.8	11.2	0.0(1)	0.0(1)
Outer Bottom Cover Plate	Primary Membrane	1.3	0.7	0.6	1.2	N/A	15.1	20.1
	Membrane + Bending	2.2	1.2	1.1	2.2	N/A	23.9	31.9
	Primary + Secondary	2.2	1.2	1.1	2.2	19.6	23.9	31.9
Inner Bottom Cover Plate	Primary Membrane	0.2	0.7	0.3	0.6	N/A	9.9	13.2
	Membrane + Bending	0.8	0.8	0.7	1.4	N/A	12.5	16.7
	Primary + Secondary	0.8	0.8	0.7	1.4	17.3	17.8	17.9
Support Ring	Primary Membrane	0.3	0.2	0.5	1.0	N/A	N/A	N/A
	Membrane + Bending	0.3	0.2	0.6	1.2	N/A	N/A	N/A
	Primary + Secondary	0.3	0.2	0.6	1.2	4.2	N/A	N/A

Notes:
1. The top cover plates are not loaded by AHSM insertion/extraction.

Table D-2 24PT1-DSC Accident Condition Stresses

Component	Stress Type	Stress Intensity (ksi)			
		Flood	Seismic	Drop Accident(1)	Accident Pressure
Shell	Primary Membrane	1.6	10.2	29.8	10.2
	Membrane + Bending	2.9	17.4	34.2	26.4
Outer Top Cover Plate	Primary Membrane	0.2	1.2	36.9	7.8
	Membrane + Bending	0.5	2.4	52.5	24.0
Inner Top Cover Plate	Primary Membrane	0.2	10.2	25.3	2.4
	Membrane + Bending	0.5	11.4	38.4	23.4
Outer Bottom Cover Plate	Primary Membrane	0.3	7.8	23.3	3.6
	Membrane + Bending	0.5	13.2	34.1	6.6
Inner Bottom Cover Plate	Primary Membrane	0.8	1.2	39.1	1.8
	Membrane + Bending	1.6	4.8	40.1	4.2
Support Ring	Primary Membrane	1.4	1.8	14.2	3.0
	Membrane + Bending	1.9	1.8	24.9	3.6

Notes:
1. Envelope of 75g side drop and 25g corner drop.

Table D-3 24PT1-DSC Load Combination Results for Normal and Off-Normal Loads (ASME Service Level A and B)

Component	Stress Type	Controlling Load Combination	Stress Intensity (ksi)		Stress Ratio
			Calculated	Allowable	
Shell	Primary Membrane	UL-4	17.1	18.6	0.92
	Membrane + Bending	UL-4	24.3	27.9	0.87
	Primary + Secondary	UL-4	30.5	55.9	0.55
Outer Top Cover Plate	Primary Membrane	HSM-3 / HSM-4	4.5	16.7	0.27
	Membrane + Bending	HSM-3 / HSM-4	15.7	25.0	0.63
	Primary + Secondary	HSM-3 / HSM-4	15.7	50.1	0.31
Inner Top Cover Plate	Primary Membrane	TR-1 / TR-5	2.7	16.7	0.16
	Membrane + Bending	DD-1	19.1	27.0	0.71
	Primary + Secondary	DD-1	42.9	54.0	0.79
Outer Bottom Cover Plate	Primary Membrane	UL-4	17.0	18.6	0.91
	Membrane + Bending	UL-4	27.2	27.9	0.97
	Primary + Secondary	UL-4	27.2	55.9	0.49
Inner Bottom Cover Plate	Primary Membrane	UL-3 / UL-4	11.1	16.7	0.67
	Membrane + Bending	UL-3 / UL-4	14.8	25.0	0.59
	Primary + Secondary	LD-3	20.1	50.1	0.40
Support Ring	Primary Membrane	HSM-3 / HSM-4	1.2	16.7	0.07
	Membrane + Bending	HSM-3 / HSM-4	1.4	25.0	0.05
	Primary + Secondary	TR-1	4.8	50.1	0.10
Inner Top Cover Plate to Shell Weld	Primary	TR-3 / TR-7	7.5	10.0	0.75
	Primary + Secondary	TR-7	12.8	30.1	0.42
Outer Top Cover Plate to Shell Weld	Primary	TR-3 / TR-7	2.8	10.0	0.28
	Primary + Secondary	TR-3	16.9	30.1	0.56
Outer Bottom Cover Plate to Shell Weld	Primary	UL-3 / UL-4	8.6	10.0	0.86
	Primary + Secondary	LD-3	24.2	30.1	0.80

Note:

1. The shell seam welds and the inner bottom cover plate to shell weld are full penetration welds in compliance with Subsection NB. Qualification of the welds is demonstrated by qualification of the shell and cover plate.

Table D-4 24PT1-DSC Load Combination Results for Accident Loads (ASME Service Level C)

Component	Stress Type	Controlling Load Combination	Stress Intensity (ksi)		Stress Ratio
			Calculated	Allowable	
Shell	Primary Membrane	UL-5	22.5	23.2	0.97
	Membrane + Bending	UL-5	31.8	34.7	0.92
	Primary + Secondary	N/A	N/A	N/A	N/A
Outer Top Cover Plate	Primary Membrane	HSM-13	1.3	20.0	0.07
	Membrane + Bending	HSM-13	2.2	30.0	0.07
	Primary + Secondary	N/A	N/A	N/A	N/A
Inner Top Cover Plate	Primary Membrane	HSM-13	0.2	20.0	0.01
	Membrane + Bending	HSM-13	0.5	30.0	0.02
	Primary + Secondary	N/A	N/A	N/A	N/A
Outer Bottom Cover Plate	Primary Membrane	UL-5	21.6	23.2	0.93
	Membrane + Bending	UL-5	32.8	34.7	0.95
	Primary + Secondary	N/A	N/A	N/A	N/A
Inner Bottom Cover Plate	Primary Membrane	UL-5	14.4	20.0	0.72
	Membrane + Bending	UL-5	19.0	30.0	0.63
	Primary + Secondary	N/A	N/A	N/A	N/A
Support Ring	Primary Membrane	HSM-13	1.6	20.0	0.08
	Membrane + Bending	HSM-13	2.2	30.0	0.07
	Primary + Secondary	N/A	N/A	N/A	N/A
Inner Top Cover Plate to Shell Weld	Primary	HSM-13	3.1	12.0	0.26
Outer Top Cover Plate to Shell Weld	Primary	HSM-4	2.4	10.0	0.24
Outer Bottom Cover Plate to Shell Weld	Primary	UL-5	10.9	12.0	0.90

Note:

1. The shell seam welds and the inner bottom cover plate to shell weld are full penetration welds in compliance with Subsection NB. Qualification of the welds is demonstrated by qualification of the shell and cover plate.

Table D-5 24PT1-DSC Load Combination Results for Accident Loads (ASME Service Level D)

Component	Stress Type	Controlling Load Combination	Stress Intensity (ksi)		Stress Ratio
			Calculated	Allowable	
Shell	Primary Membrane	TR-10	29.8	50.2	0.59
	Membrane + Bending	TR-10	38.2	64.6	0.59
Outer Top Cover Plate	Primary Membrane	TR-10	35.4	50.2	0.71
	Membrane + Bending	TR-10	52.1	64.6	0.81
Inner Top Cover Plate	Primary Membrane	TR-10	25.3	50.2	0.50
	Membrane + Bending	TR-10	41.8	64.6	0.65
Outer Bottom Cover Plate	Primary Membrane	TR-10	23.2	50.2	0.46
	Membrane + Bending	TR-10	34.1	64.6	0.53
Inner Bottom Cover Plate	Primary Membrane	TR-10	39.1	50.2	0.78
	Membrane + Bending	TR-10	40.1	64.6	0.62
Support Ring	Primary Membrane	TR-9	6.12	40.0	0.15
	Membrane + Bending	TR-9	10.60	60.1	0.18
Inner Top Cover Plate to Shell Weld	Primary	TR-10	24.0	30.2	0.80
Outer Top Cover Plate to Shell Weld	Primary	TR-10	12.3	30.2	0.41
Outer Bottom Cover Plate to Shell Weld	Primary	TR-10	6.7	30.2	0.22

Note:

1. The shell seam welds and the inner bottom cover plate to shell weld are full penetration welds in compliance with Subsection NB. Qualification of the welds is demonstrated by qualification of the shell and cover plate.