DE91008212

UNCLASSIFIED

DOE/ORO-914

INTERIM REPORT OF THE DOE TYPE B INVESTIGATION GROUP

Appendix D

LICENSING CORRESPONDENCE

JULY 1990

UNCLASSIFIED

DISTRIBUTION OF THIS DOCUMENT IS UNLIMITED

NOTICE

CERTAIN DATA CONTAINED IN THIS DOCUMENT MAY BE DIFFICULT TO READ IN MICROFICHE PRODUCTS.

DOE/ORO--914-App.D

DE91 008212

Appendix D

LICENSING CORRESPONDENCE

MASTER

DISTRIBUTION OF THIS DOCUMENT IS UNLIMITED

INDEX TO APPENDIX D

NRC Region III Files

State of Georgia Correspondence

Miscellaneous Licensing Correspondence

NRC REGION III FILES

INDEX TO NRC REGION III FILES

Date	From	To	Subject
4/3/84	RSI (Chin)	NRC (Wang)	Amendment to license: 1/day thermal cycling; [Letter Notes] solubility tests show low thru 1/8" holes; leaky capsule found by wipe test; pool water monitored; "currently preparing to modify" facility
5/29/84	NRC (Adam)	RSI (Chin)	Encloses Amendment 03 authorizing changes requested in 4/2/84 letter, Procedures and Certification Branch in Washington to authorize cesium-137 capsules
6/26/84	NRC (Bassin)	RSI (Chin)	Denies request to amend license 8 mil/year corrosion rate at 430°C; thermal cycling aggravates rate; more data needed
7/3/84	Climax (Crawford)	RSI (Chin)	Estimates 10,000 psi is max stress in a 150°C to 30°C cooling
7/16/84	PNL (McElroy)	DOE (White)	Explains corrosion data; obviously prompted by Chin; very positive; rubs over a lot of data
7/23/84	RSI (Chin)	NRC (Bassin)	Refutation of early data and push to get on with licensing
7/25/84	DOE (Jicha)	NRC (Cunningham)	Pushes for license and states operating limits for capsules (Temperatures only)
9/14/84	NRC (Ayer)	NRC (Adam)	Licensing of capsules to proceed. Will use demo facility; worry about reliability; recognize solubility problem.

Date	From	To	Subject
10/15/84	NRC (Singer)	RSI (Chin)	Provides changes needed to resume processing of amendment to license which was for cobalt + proof of operation ≤ 200°C/ limit of cycles; clean up procedures. Appendix attached listing suggested changes to applications
11/8/84	RSI (Chin)	NRC (Ayer)	Provides changes to application in response to Singer's 10/15/84 letter: * Continues to hold Cs diffusion low * "leaky source will be identified and removed and returned to DOE" * Request max temperature increase to 300° and delta temp. sensor * anticipate weld failure detected by pool water detectors (never expected air fail) - refers to Richland detection technique
12/10/84	NRC (Singer)	RSI (Chin)	Since Decatur is demo, NRC will stop and RSI should work with Georgia
12/14/84	RSI (Chin)	NRC (Singer)	Westerville is now the demo facility
1/23/85	PNL (Tingey)	Sandia (Reuscher)	Capsules at 100°C for 34 months, 200°C for 69 months, corrosion less than .001; corrosion due to impurities rather than the CsCl; suggest 300° to 350°C as a max. temperature
2/1/85	NRC (Cunningham)	NRC (Nussbaumer)	Accepts capsules for dry storage, dry irradiation but <u>not</u> wet storage, dry irradiation

Date	From	To	Subject
4/3/85	NRC (Cunningham)	DOE (Jicha)	Capsule extraction, temperature monitoring, temperature limited to 300°C/ cycles <12,000, 25% penetration of wall by corrosion will be reason for recall of capsules
4/4/85	NRC (Hickey)	RSI (Chin)	Proceeding with review of application for WESF capsules; have not received letter from DOE
4/4/85	RSI (Chin)	NRC (Hickey)	Agrees to T/C on cage around sources, in compliance w/April 4 letter
4/8/85	NRC	RSI	License amendment - permit WESF capsules
7/22/85	RSI (Chin)	NRC (Hickey)	Further defines temp monitoring; requests immediate loading of Decatur after Westerville
7/25/85	NRC (Hickey)	RSI (Chin)	Requests more detailed temp. system; cannot use capsule in Illinois
7/31/85	RSI (Chin)	NRC (Hickey)	More detail on T/C but remove T/C after first read. Attachment: RSI's analysis of expected surface temp of 135°C.
8/19/85	RSI (Chin)	NRC (Axelson)	Urgent request for amendment to license. Remove T/C after first measurement; load capsules elsewhere rather than wait for first capsule test
9/3/85	NRC (Adam)	NRC (Hickey)	Why is T/C required?
10/1/85	NRC (Axelson)	RSI (Chin)	Asks confirmation that installation of T/C hasn't created any problems
10/1/85	NRC	RSI	License amendment

Date	From	To	Subject
10/7/85	RSI (Chin)	NRC (Axelson)	Confirms T/C isn't a problem; still want to remove it; NRC pays if sources hang up
10/21/85	NRC (Miller)	NRC (Axelson)	Comments on RSI's amendment request: Still evaluating T/C - seems safe - why does temp go up when sources lowered - malfunction?
10/21/85	NRC (Cunningham)	DOE (Jicha)	T/C data to be evaluated by Rimini and Tingey. Will consider license applications for use of WESF capsules in wet storage irradiators
10/24/85	NRC (Axelson)	RSI (Chin)	Chin's request for amendment to remove T/C is being considered
10/24/85	NRC (Lynch)	[Memo to Files]	Don't see T/C entanglement with sources as a problem; RSI instructed to maintain temp monitoring system
1/15/86	NRC (Axelson)	NRC (Adam)	Temperature data shows 130°C max and 92° average but no DOE study so T/C stays on
1/15/86	NRC	RSI	License amendment
1/28/86	NRC (Adam)	RSI (Chin)	T/C stays on until DOE/PNL study released
1/28/86	DOE (Rimini)	NRC (Hickey)	Provides temp data formally to NRC - copper capsule 126°C max; recommend removal of T/C
3/27/86	NRC	RSI	License amendment remove T/C
4/2/86	DOE (White)	DOE (Heusser)	Heat transfer calc. yields 180°C [Transmittal of Tingey to Jarrett, PNL Byprod. Mngr.]
4/14/86	NRC (Hickey)	NRC (Axelson)	DOE recommends, T/C removal

Date	From	To	Subject
5/21/86	NRC (Adam)	RSI (Chin)	T/C removed per attached license amendment

RADIATION STERILIZERS INCORPORATED

Applicant .....
Check No. 5223
Amount/Fee Rec'd. $74.00
Type of Fee. Amendment
Date Check Rec'd. 4/14/84
Received By .....

FEDERAL EXPRESS

April 3, 1984

'84 APR -4 A10:51

RECEIVED BY LFMD
Date 4/12/84
Log March 4
By Brown
Orig. To .....
Action Compl. 4/16/84
Call to check status

Mr. Joseph C. Wang
U.S.N.R.C.
Willste Building
7915 Eastern Ave.
Silver Spring, MD 20910

Reference: License 04-19644-01

Dear Joe:

This letter requests that the above referenced license be amended as follows:

Item 2 Address should read "3000 Sand Hill Road #2-190".

Item 6A Add "Cesium-137".

Item 6B Add "Cesium-137".

Item 7A Add "Sealed sources (NPI model NPRP-xxxx-xx-x)".

Item 7B Add "Sealed sources (NPI model NPRP-xxxx-xx-x)".

Reference source and device catalog #MD474S108S Maryland Department of Health and Mental Hygiene. These are cobalt-60 sources where "xxxx" signifies the source length in millimeters and is less than 1370 and greater than 100, "xx" signifies the nominal diameter in millimeters and is less than 40 and greater than 6 and the last "x" represents one or more letters designating the end cap configuration.

Item 7A Add "Sealed source (U.S.D.O.E. WESF capsule)".

Item 7B Add "Sealed source (U.S.D.O.E. WESF capsule)".

Reference U.S.D.O.E. data submission under Docket #83-106 to U.S.N.R.C.

The following factors were considered in our safety analysis prior to submitting this amendment:

17341

Radiation Sterilizers, Incorporated, 3000 Sand Hill Rd., 2-190, Menlo Park, CA 94025/Telephone (415) 854-2800

1. The capsules, as shown in the referenced docket above, are capable of withstanding tests far more severe than those specified in Annex 4 of ERDA Appendix 0529 or ANSI 342.

2. Each encapsulation is 0.136" thick with a 0.400" thick end cap. Cobalt source encapsulations are 0.02" to 0.03" thick with 0.165" end caps. AECL, the leading supplier of cobalt, has provided over 10,000 of these sources without a reported leak over 20-25 years. There have been reported source failures caused by mechanical abuse.

3. Each encapsulation (2) is helium leak checked.

4. Thermal cycling temperatures are below the β-transition temperature of the cesium chloride, and well within the fatigue capabilities of 316L stainless steel.

5. Thermal cycling of the sources is not expected to average more than once daily throughout its life.

6. RSI utilizes very high ventilation rates through the cell which will keep the source temperatures lower. Maximum calculated surface temperatures of the WESF capsules is 200 degrees centigrade. Actual measurements by DOE show that the temperature is in the 100 to 125 degrees centigrade range. Through decay, the surface temperatures will reduce with time thereby decreasing thermal cycling concerns.

7. Solubility tests on the fused salt have been reported by J. H. Gillette of ORNL to be very low through 1/8" diameter holes drilled through the two encapsulations.

8. RSI systems are designed with 24" of free space for the source rack. We anticipate our 2" cobalt rack to be replaced by a 5" cesium/cobalt rack. There will be a 9" to 10" clearance between the source rack and the product carriers. A metal cage will be constructed in this space to prevent interaction between the source rack and the product carriers. The cages will permit cooling air to circulate by the sources.

9. Capsules may be loaded into the source rack in a controlled manner to minimize heating effects.

10. The pool water will be monitored to detect any increase in activity. In the event of a source leak, the cesium in the water would be removed with shielded deionization columns. The leaky source would be identified by wipe testing each capsule, and removed. The carriers and totes will be measured for contamination and decontaminated if necessary. Any airborne contamination would be collected on the HEPA filters located in the exhaust vents.

11. Materials capability tests between the cesium salts and the 316L encapsulation showed that there is no interaction between these materials.

12. Water coolers will be added to remove the increased heat load caused by the cesium when the heat load warrants it.

Item 8A. Present limits to apply to NPRP-xxxx-xx-x sources.

Add: 30,000,000 curies of cesium. Each source not to exceed 150,000 curies.

Item 8B. Same as Item 8A.

Approximately 5Ci of cesium-137 in the form of WESF capsules will be equivalent to 1Ci of cobalt-60. The additional isotope required in excess of the theoretical is for self-absorption of the WESF capsule.

Item 12B. Change second sentence to include Barry Fairand.

Barry Fairand has been given on-the-job training during two cobalt source loadings, and has demonstrated the capability of manipulating and loading sources.

Item 15 Change to read:

This license does not authorize repairs or alterations of the irradiator or facility involving removal of shielding or access to the licensed material except as provided otherwise by specific condition of this license. Removal, replacement and disposal of sealed sources containing licensed material shall be performed only by those designated by the licensee and specifically authorized by the Commission or an Agreement State to perform such services. The licensee is authorized to install the sealed sources in accordance with the procedures described in Section 8 of the licensee's application dated January 21, 1982, with a minimum of two authorized users.

Reason: RSI does not use ALCL equipment, and therefore their personnel are not trained or qualified to install sources into RSI facilities.

I am requesting that you process this amendment request on an expedited basis, since we are currently preparing to modify these facilities to operate with the larger WESF cesium-137 capsules. Please do not hesitate to call me if you need additional information.

Thank you for your cooperation.

Sincerely,

Allan Chin

Allan Chin
President

AC:ck

Enclosure ($110 check, amendment fee)

cc: Barry Fairand, RSI Westerville
Thomas Burley, RSI Schaumburg

Ck returned
[illegible]

MAY 29 1984

Radiation Sterilizers, Inc.
ATTN: Mr. Allan Chin
President
3000 Sand Hill Rd. #2-190
Melno Park, CA 94025

Gentlemen:

Enclosed is Amendment Number 03 to your NRC License Number 04-19644-01 which authori the changes you requested in your letter dated April 3, 1984 and includes radiation survey data reported in letter dated April 2, 1984.

Please note that we have not authorized the addition of the cesium sources you requested. This is being handled separately by our Procedures and Certification Branch in Washington, D.C. We will act upon that request pending completion of their review.

If you have any questions or require clarification on any of the information stated above, you may contact us at (312) 790-5625.

Sincerely,

William J. Adam, Ph.D.
Materials Licensing Section

9

8504240273 850408
NMSS LIC30
04-19644-01 PDR

RIII

Adam/bm
05/23/84

DISTRIBUTION
JEAyer NBassin
TDorian, OELD
GJackson, LFMB
RECunningham
FCML r/f
FC Central File
NMSS r/f

JUN 25 1984

Radiation Sterilizers, Inc.
ATTN: Mr. Allen Chin, President
3000 Sand Hill Road
Menlo Park, CA 94025

Gentlemen:

This refers to your application dated April 4, 1984, for amendment to License No. 04-19644-01. The application for license amendment requests authority to use Department of Energy WESF capsules in your Schaumberg, Illinois, and Westerville, Ohio facilities.

We are not now prepared to license the contemplated use of WESF capsules in facilities where there will be dry irradiation, wet storage of these capsules. Pacific Northwest Laboratories (PNL) has been conducting tests to provide the data needed to estimate long-term attack of 316-L stainless steel by the cesium chloride contained in the WESF capsules. In a March 1984 publication, PNL-4847, which is available from the National Technical Information Service, United States Department of Commerce, 5285 Port Royal Road, Springfield, Virginia 22161, it observed a linear metal attack of about 0.008 inches per year at a metal/CsCl interface temperature of about 430° c. This finding was in the absence of the thermal cycling that takes place in the dry irradiation/wet storage mode. We believe that thermal cycling can only result in aggravating the rate of attack. If the linear attack rate relationship holds, the 0.136 inch thick inner capsule would be jeopardized long before the 30 year half-life for cesium-137.

10

We cannot take further action on your application until more information is available about the effect of thermal cycling on the WESF capsules. We will resume processing of your application when the needed information is provided to us.

Sincerely,

8504240262 850408
NMSS LIC30
04-19644-01 PDR

Nathan Bassin, Acting Chief
Material Certification and
Procedures Branch
Division of Fuel Cycle and
Material Safety

OFFICE	FCAF	OELD	FCMC	FC		
SURNAME	JEAyer	TDorian	NBassin/sc	RECunningham		

CLIMAX MOLYBDENUM COMPANY
3858 CARSON STREET, SUITE 210, TORRANCE, CALIFORNIA 90503 • (213) 540-6612

AMAX

July 3, 1984

Mr. Al Chin
Radiation Sterilizers, Inc.
3000 Sand Hill Road 4-2J0
Menlo Park, California 94025

Dear Mr. Chin:

Thank you for your inquiry regarding the fatigue properties of 316L stainless steel. Literature data indicate that the million-cycle fatigue limit of annealed austenitic stainless steel is about 25-30,000 psi. This is about half the theoretical stress which could be induced in a bar heated to 150C, constrained, and cooled to 30C.

Such a stress (or a strain corresponding to it) would, however, be impossible to achieve by thermal cycling. It would require instantaneous cooling of the surface of a bar from 150C to 30C, a condition which can't exist. The container you described to me, with its relatively thin wall and mild quench rate, should not experience stresses even approaching the fatigue limit. A conservative estimate is that the stresses developed might approach 10,000 psi. A careful stress analysis, however, would have to be undertaken to define exactly what stresses may be anticipated.

Your application of 316L stainless is unique: we haven't encountered it before. We are aware however, of the use of 316 (and 316L) as cladding on heaters subjected to thermal gradients at least as great as would be present in your capsules. To our knowledge, fatigue has never been an operative failure mechanism.

I hope that this brief analysis will be of assistance. If we can be of further help, please call on us.

Yours truly,

James D. Crawford

James D. Crawford

JDC RC

Battelle
Pacific Northwest Laboratories
P.O. Box 999
Richland, Washington U.S.A. 99352
Telephone (509) 375-2532
Telex 15-2874

July 16, 1984

bcc: JM Latkovich
GH Bryan
GL Tingey

Mr. J. D. White, Director
Waste Management Division
Richland Operations Office
Department of Energy
Richland, WA 99352

Dear Mr. White:

CORROSION OF WESF CESIUM-137 CAPSULES

Ref: Telecommunications message John J. Jicha, Jr., to J. D. White, dated July 3, 1984
Letter from NRC signed by Nathan Bassin to Radiation Sterilizers, Inc., dated June 26, 1984

In the subject letter from NRC to Radiation Sterilizers, Inc., the NRC indicated the need for additional information before they will take action on a licensing application for use of WESF cesium-137 capsules in the licensee's irradiators. The NRC cites the data taken from PNL-4847 as a reason for this action. The data from PNL-4847 are based on the results of tests conducted on capsules which were insulated to yield a salt/metal interface temperature of about 450°C. This temperature is 200 to 250°C higher than those expected in most irradiator applications; therefore, the corrosion rates do not apply to lower temperature applications. 0.0002

The 450°C data show corrosion rates up to 0.008 inch/year, over a period of six-months, which led to the concerns expressed by NRC. More recent data from a capsule held at 450°C salt/metal interface temperature for one year showed a somewhat lower corrosion rate (0.002 inches/year). The reduced rate is interpreted to be due to a combination of two factors: 1) reduced corrosion rate with time because of depletion of the corroding impurities, and 2) lower initial impurity content. Future plans for this study include examination of capsules each year for up to five years. The examination of the two-year test is currently under way which should lead to a more accurate interpretation of the long-term corrosion data. Since this is a carefully controlled study, it can be used to evaluate the corrosion mechanism, define the role of impurities on corrosion, and evaluate the effect of temperature. It is not, however, a measure of the rate of corrosion at lower temperatures expected in irradiator applications.

Examination of a WESF capsule used in the Sandia Irradiator for Dried Sewage Sludge (SIDSS), operating at about a 200°C salt/metal interface temperature (a more typical irradiation temperature) for 27 months, showed that the

Battelle

corrosion rate was about 0.0002 inch/year. Interpolation of these data to intermediate temperatures suggests that capsules operating at less than 250°C outer surface temperature or 300°C salt/capsule interface temperature will not corrode at a significant rate.

The NRC also addressed the potential for enhancement of corrosion by thermal cycling at relatively low temperatures. We believe that such enhancement will not occur. Rather, we expect that the corrosion rate will be characteristic for the time at temperature. The possibility of enhanced corrosion is currently being examined, however, and an experimental verification will be undertaken, if warranted.

We have recently completed an assessment of the data on WESF cesium capsule corrosion, swelling, and mechanical properties (G. L. Tingey et al., PNL-5170, June 1984), and a copy of this information will be forwarded to DOE and NRC around August 1, 1984.

If you have further questions concerning this matter, please contact Garth Tingey or John Latkovich.

Very truly yours,

J. L. McElroy, Manager
Nuclear Waste Technology Program Office

JLM/tf

cc: H. E. Ransom
J. L. Rhoades
M. Dayani

RADIATION
SHIELDERS
INCORPORATED

FEDERAL EXPRESS

July 23, 1984

Mr. Nathan Bassin, Acting Chief
Material Certification and Procedures Branch
Division of Fuel Cycle and Material Safety
U.S.N.R.C. - Willste Bldg.
7915 Eastern Ave.
Silver Spring, MD 20910

GREEN TICKET HAS RETURNED "GRATUITOUS" STATEMENTS PER TOLDO 8/1/84 @ 11:15. MUST ECP DAY OF LETTER.

Dear Mr. Bassin:

In response to your letter dated June 20, 1984, I have had several discussions with Messr.'s Garth Tingey and Gary Bryan of P.N.L. Both have assured me of their belief that the specific data cited in Mr. Bryan's report PNL-4847 was erroneous.

Enclosed is a copy of a letter written by Mr. Garth Tingey to substantiate my position that the WESF capsules should be safe in my application. The interface temperature in my application is not expected to exceed 200 degrees Centigrade, whereas the data cited to deny my request was applicable to temperatures of 450 degrees Centigrade. Thermodynamically, lower reaction rates will always result from lower temperatures.

The data on the Sandia irradiator, where the interface temperature was estimated to be about 200 degrees Centigrade showed corrosion rates of about 0.0002 inches per year. Using this rate of attack, 680 years would be required to corrode through the inner 0.136 inch thick stainless steel encapsulation. Considering that there are two 0.136 inch layers and that a linear corrosion rate is assumed, there seems to be little danger of a corrosion failure of the capsules prior to their decay through 42 half lives. At which time the amount of radioactivity would be negligible. Seven half lives will reduce the activity to less than one percent. In all probability, the WESF capsules will be re-cycled to D.O.E. within one or two half lives.

Low temperature thermal cycling has never been shown to enhance high temperature corrosion rates. Conversely, the opposite will most likely occur following the generally accepted laws of thermodynamics, and result in lower corrosion rates.

I have had several discussions with the metallurgists at Climax Molybdenum Company, a leading supplier of stainless steels, concerning the effects of the low temperature thermal cycling on 316L. The enclosed letter expresses their opinion on the possibility of fatigue failure induced by thermal cycling. In their analysis, they refer to

8504240255 850408
NMSS LIC30
04-19644-01 PDR

million cycle fatigue limits without problems. Our estimated 30 year operation would result in about 12,000 cycles based upon one cycle per day. Clearly this low temperature cycling will not adversely affect the integrity of the WESF capsules.

I have included also a copy of a U.S.N.R.C. license issued to the University of Minnesota authorizing the use of cesium-137 in a wet storage application which could provide a precedence for this approval.

As a result of extensive discussions and review of the WESF capsule design and construction, I have not found any substantive reason why the WESF capsule should not be approved for immediate use in my facilities. The details of these facilities have already been approved by the N.R.C., and my request is for the inclusion of an alternate radiation source which has met all of the N.R.C. testing requirements for sealed sources.

I can sympathize with N.R.C. concerns over possible downstream, unforeseen problems. I have discussed this concern with the D.O.E. and they have suggested a capsule monitoring program whereby periodically a capsule would be removed and returned for analysis which would give early warning of a potential long term problem.

I am in full agreement with this approach, as well as the requirement for any other reasonable operating conditions which could be included in the approval. I am hereby requesting immediate approval of the WESF capsule in RSI facilities based upon the information provided herewith and previously by the D.O.E. By including the requirement of periodical D.O.E. capsule testing in the approval, I believe that we will all be more comfortable.

I believe that I have adequately addressed your concerns, and look forward to your rapid approval. Since this is an extremely urgent request, I will be calling you next week for a verbal response.

Sincerely,

Allan Chin

Allan Chin
President

AC:ck

Enclosures

Department of Energy
Washington, D.C. 20545

JUL 25 1984

Mr. Richard E. Cunningham, Director
Division of Fuel Cycle and Material Safety
U.S. Nuclear Regulatory Commission
Silver Spring, MD

Dear Mr. Cunningham:

As agreed in our July 10, 1984, meeting regarding the Nuclear Regulatory Commission's (NRC) licensing of the cesium 137 Waste Encapsulation and Storage Facility (WESF) capsule in irradiators, please find enclosed the June 1984 report PNL-5170, "A Review of Safety Issues That Pertain to the Use of WESF Cesium Chloride Capsules in an Irradiator," which this office is submitting in support of our licensing request.

As discussed, the Department of Energy (DOE) believes that the test data collected to date, especially that from the 6 years operating experience with the Sandia Irradiator for Dry Sewage Solids, should furnish ample evidence that an NRC license for similar irradiators utilizing wet load, dry storage, and dry operation design concept is warranted.

With respect to wet load and storage and dry operation irradiators, we believe that considerable technical information exists from 10 years operation of WESF that are applicable to the licensing process. In addition, we have begun an accelerated thermal cycling tests of two WESF capsules. This evaluation should be completed in 6 months. DOE recommends that NRC license the first wet/dry facility on the basis that:

(1) a capsule would be removed annually from one of each type of irradiator and subjected to destructive evaluation to confirm that operation of these facilities does not result in conditions beyond those that have previously demonstrated a high degree of integrity of the thick-walled, doubly-encapsulated WESF cesium capsules;

(2) irradiator operating limits be established well within demonstrated integrity limits, e.g.,

wet load, dry storage, dry operation irradiator	operating/storage temperature limit: ≤300°C
wet load, wet storage, dry operation irradiator	operating surface temperature limit: ≤300°C thermal cycle limit: 12,000 cycles air to water 200°C maximum delta T

8504240242 850408
NMSS LIC30
04-19644-01 PDR

I appreciate the opportunity that we had on July 10, 1984, to discuss with you and your staff the safety issues and related data. If you have any questions, please contact me accordingly.

Sincerely,

FOR

John J. Jicha, Jr., Director
R&D and Byproducts Division
Office of Defense Waste
and Byproducts Management

Enclosure

SEP 14 1984

MEMORANDUM FOR: William J. Adam
Materials Licensing Section
Division of Radiological & Material Safety Programs
Region III

FROM: James E. Ayer
Advanced Fuel and Spent Fuel Licensing Branch
Division of Fuel Cycle and Material Safety, NMSS

SUBJECT: CESIUM SOURCES IN THE FORM OF WESF CAPSULES IN DRY IRRADIATION--WET STORAGE FACILITIES

Re: Letter to Radiation Sterilizers, Inc. from William J. Adam dated May 29, 1984.

The purpose of this memorandum is to inform you of our progress and intent relative to authorizing the use of cesium sources in the form of WESF capsules in dry irradiation--wet storge facilities.

On October 6, 1983, the Department of Energy (DOE) requested certification of WESF capsules for use in irradiators. The WESF capsule has an activity level so high that ANSI N542 recommends an evaluation of fire, explosion, or corrosion probability and a separate evaluation of the specific source usage and source design. The currently-used WESF capsule was designed for water basin storage of cesium chloride as a waste material. Furthermore, the number of WESF capsules available is insufficient to satisfy the orders of three potential users. For these reasons, among others, NRC decided not to register the WESF capsules as sealed sources. Instead, NRC in a letter dated April 3, 1984 agreed to assist in the evaluation of demonstration facilities and to review license applications for demonstration projects sponsored by the DOE.

The DOE has completed extensive mechanical testing of WESF capsules and compared the results with ANSI N542 Class 6 Test Conditions. The results of testing are discussed in PNL-5170, "A Review of Safety Issues That Pertain to the Use of WESF Cesium Chloride Capsules in an Irradiator," a copy of which is enclosed. The WESF capsules comply with the test conditions of ANSI N542 Class 3 and, with the exception of external pressure tests comply with the most severe conditions designated as Class 6. Capsule samples have been tested for the effects of impact, percussion, and fire, with no visible evidence of capsule failure. On this basis, it is our judgment that the WESF capsule has mechanical properties sufficient to meet the American National Standard for Sealed Radioactive Sources for Use in Category III and IV Gamma Irradiators. There remains the open question of corrosion probability.

(8410230553 12 pp.

The 30-year half-life of Cs-137 is an incentive to use the WESF capsule for periods of time greatly exceeding those experienced with isotopes of much shorter decay rate, such as Co-60. Therefore, corrosion effects over extended periods of time are important to an understanding of the risk associated with WESF capsule use. The DOE has an extensive program of corrosion testing that is still in progress. Corrosion rates on capsules held at an estimated interface temperature of about 150° C. for up to six years show insignificant attack on the inner capsule at the CsCl-316 interface. Experiments on capsules held at an interface temperature of about 450° C. for up to two years show variable but significant corrosion rate at the CsCl-316 interface. These findings are in the absence of long-term thermal cycling that would take place in the (Category IV) dry-irradiation/wet storage mode.

Efforts to ensure the use of reliable sources notwithstanding, the effects of loss of capsule integrity can be significant due to the solubility of CsCl and the specific activity of Cs-137. At about 30° C. the solubility of CsCl is 200 grams per 100 grams of water. Less than 0.003 mg. of Cs-137 will contaminate a 30,000 gallon storage pool to levels beyond those permitted by 10 CFR 20 for release to an unrestricted area. Furthermore, if a resin column is considered a point source, about 4 mg. of adsorbed Cs-137 would result in a gamma radiation level of 1 R/hr. at 1 meter.

Recognition of the unique properties of Cs-137 chloride, the results of the experimental program being carried out by DOE, and of meetings and discussions with DOE has led to the following conclusions relative to WESF capsule use in Category IV gamma irradiators.

- We would consider the first user of WESF capsules to be the "demonstration" facility for a particular process.

- The demonstration must include periodic sampling and destructive testing of WESF capsules including:

  1. An approved sampling plan.

  2. A commitment to test both inner and outer capsules for the effects of corrosion and to report test results.

  3. An approved action plan and action levels based on test results.

- The demonstration must include proof of operation of capsules at < 300° C. operating surface temperature at the most restrictive location with a thermal cycle limit of 12,000 cycles air-to-water over the lifetime of the capsule.

- The demonstration must address the ultimate disposition of the spent capsules including:

  1. A commitment to transport from location of use to location of receipt,

  2. A commitment to receive spent capsules.

- The demonstration must address emergency procedures and systems including:

  1. Impervious water storage pool liner,

  2. A storage pool cleanup system with provisions for shielding,

  3. Continuous monitoring of gamma radiation emanating from cleanup resins,

  4. A plan for disposal of contaminated resins,

  5. Procedures for operation of cleanup systems under contaminated conditions.

We intend to proceed with licensing actions involving WESF capsules on the above bases. If you have questions regarding the above, please contact me at (301) 427-4205.

Original Signed by
James E. Ayer

James E. Ayer
Advanced Fuel and Spent Fuel
Licensing Branch
Division of Fuel Cycle and
Material Safety, NMSS

Enclosure: PNL-5170

cc: R. E. Cunningham, FC
B. Singer, FC
J. Jicha, DOE
R. Woodruff, Region II
D. A. Nussbaumer, SP

OCT 15 1984

Distribution:
Docket File
NMSS R/F
FCMC R/F
FCAF R/F
BSinger
JJicha, DOE
G. Tingey
RECunningham
RWoodruff, Region II
DANussbaumer, SP
WJAdam, Region III
JEAyer

bcc:

Radiation Sterilizers, Inc.
ATTN: Mr. Allen Chin, President
3000 Sand Hill Road
Building No. 4-245
Menlo Park, California 94025

Gentlemen:

The purpose of this letter is to advise you that we are ready to resume processing of your April 3, 1984 application for amendment to License 04-19644-01. Our intent relative to authorizing the use of cesium sources in the form of WESF capsules in dry-irradiation/wet storage facilities is embodied in a memorandum to William J. Adam, Region III, dated September 14, 1984. A copy of that memorandum is enclosed.

Your current license authorizes possession and use of licensed material in accordance with statements, representations, and procedures contained in applications dated January 21, 1981 and August 30, 1983 as well as several letters amending and/or clarifying the applications. The use of WESF capsules will require extensive revision of those applications. We recommend that the necessary revisions be submitted as new or replacement pages to the original applications. The new or replacement pages should be numbered and dated with the changed or new items clearly identified.

The attached appendix to this letter enumerates changes to your existing application that are necessary preliminaries to the authorization of use of WESF capsules in your Schaumburg, Illinois, and Westerville, Ohio, facilities. In addition, we have indicated some of the new considerations that apply to WESF capsule use in those facilities. Upon receipt of your response we will resume processing of your applications for license amendment.

If you have any questions pertaining to the above, please feel free to call Jane E. Ayer (301/427-4205) or me.

Sincerely,

/s/

Bernard Singer, Chief
Materials Certification
and Procedures Branch
Division of Fuel Cycle and
Material Safety

8410:
XA

Enclosures:
1. Memorandum to WJAdam
   dtd 9/14/83
2. Appendix

OFFICE	FCAF	FCMC					
SURNAME	JEAyer:flb	BSinger					
DATE	7/26/84						

APPENDIX

A. This listing is provided as an example of changes necessary to your current applications.

1. The following items and sections in the applications constituting a part of License No. 04-19644-01 are restrictive to the use of cobalt-60. They should expanded to recognize the use of cesium-137.

A.1

Item 8 A-D

"The only isotope to be used in this facility is cobalt-60."

Section 1, 1st paragraph

S1,P1

"The facility is designed .... utilizing a controlled cobalt-60 source."

Section 1, 3rd paragraph

S1,P1

"The cobalt-60 source elements are generally .... delivered to the RSI facility in DOT approved lead casks from the isotope suppliers."

Section 5, 6th paragraph

"The following assumptions were made for these calculations:

S5,P19

"1. The Co-60 activity will be 10^7 curies or less.

"2. A nominal exposure rate of 1.2 R/hr. at one meter per curie of activity has been used. For shielding calculations, ...

"3. etc."

"Source Break in Pool

S5,P82

If a source ruptures due to any reason, the cobalt pellets ... could be removed with magnets ... and returned to the vendor ...."

2. The following items and sections in the applications constituting a part of License 04-19644-01 are restrictive to source loadings that are typical of Co-60. If the license is to be amended to permit possession of 30,000,000 curies of Cs-137 and 5,000,000 curies of Co-60, they should be expanded to recognize this increase in source loading.

Item 13a

"We do not expect the maximum source loading to exceed 5 MCi (5 megacuries)."

Item 13c

"The maze was designed to have less than 0.25 mR/hr. flux at the entrance for a 10 MCi source loading."

Item 13j

"The shielding has been designed to provide less than 0.25 mR/hr. at all external surfaces with a 10 MCi source loading."

Item 14

"Our source racks have been designed for over 30 years of operation before their capacity is reached. ...Since each new module represents about 100,000 curies (10 elements each of 10,000 Ci), they will have slightly over 3,000 curies after 30 years, the half-life of cobalt being roughly 5.25 years. AECL has agreed to dispose of any decayed isotope."

Section 1, 2nd paragraph

"The biological shield is designed ... emission rates less than 0.25 mR/hr."

Section 5, 1st paragraph

"The biological shield for the RSI Schaumburg, Illinois facility was calculated ... with a 10 megacurie source loading. During operation, the sources, ... in the 12' x 29' x 54' gamma cell." (12'8" x 23' x 43' gamma cell)

Section 14, paragraph 10
Water Treatment System

"Water Chillers shold be considered when isotope loading approaches two megacuries...."

3. The following items and sections in the application constituting a part of License 04-19644-01 reflect designs based on the use of cobalt pencils as sources. They, as well as drawings that are a part of the application, should be revised to recognize the comingling of WESF capsules and cobalt pencils.

Item 13d

"Source elements are loaded into standard modules, which hold 10 elements in a flat array, when received."

Item 13e

"The source elements are placed into stainless steel modules, which are subsequently placed into a stainless steel source rack.... A steel cage is build around the source racks to protect them from the product carriers. The distance between our source rack and the cage is approximately 12...."

Section 1, 5th paragraph

"Up to ten source elements are loaded into each module ... 15 feel long, 8 feet high, and 2 inches thick."

Section 8, 2nd paragr ph

"... ten sources are placed into one of our (the) source modules ... in a flat array."

Section 8, 4th and 4th paragraphs

"... Our (the RSI) system utilizes two source racks with each rack containing 32 (26) module channels. ... designed to contain three modules stacked.... The total capacity of our system ... 1520 (1560) capsules."

Source Control Procedure - 3rd paragraph

"Modules will be filled ... 96 (78); module positions in each source rack."

Source Control Procedure - 5th paragraph

"Each source rack contains 32 (26) channels to hold the source modules."

New

It is our impression that Radiation Sterilizers, Inc. (RSI) intends to comingle WESF capsules with cobalt pencils. If this is so, please provide in your application a source management plan showing the distribution of WESF capsules among the cobalt pencils. This plan should address changes of distribution with time, storage locations, and number in storage, as well as other data that describe a considered source management plan.

4. The following section in the applications constituting a part of License 04-19644-01 is specific to AECL source rods and unloading/loading procedures. It should be revised to reflect procedures specific to WESF capsules and the casks in which they are transported.

Section 8, paragraph 1

"The basic source element in this system typified by the AECL C-188 source rod ... each element ... identified with a serial number...."

Section 8, paragraph 6

"... The following procedure will be generally followed.

"1. .....
(through)
38. ....."

B. The NRC has agreed to assist in the evaluation of demonstration facilities and to review license applications for demonstration projects. We will consider the first user of WESF capsules to be the demonstration for a particular process, in this case dry-irradiation/wet storage. As you suggested in your letter of July 23, 1984 to Nathan Bassin, a capsule monitoring program is in order to "give early warning of a potential long-term problem." Thus, your application for license amendment to use WESF capsules in your facilities should include a plan for periodic sampling and destructive testing of WESF capsules. The plan should include:

1. Proof of operation of capsules at CsCl-316L interface temperature $\leq$ 200° C.,

   In your July 23, 1984 letter to Nathan Bassin you claimed that, "The interface temperature in my application is not expected to exceed 200 degrees Centigrade." Please indicate in your plan how you will monitor the temperature of the WESF capsule that resides in the most restrictive location in the source array. The most restrictive location is construed as the site of the capsule that is at the highest temperature. If the surface temperature of the outer capsule is measured, please show by calculation the relationship between outer capsule temperature and CsCL-316 L interface temperature. A plan for recording the daily maximum temperature during the dry irradiation cycle should be included in the plan.

2. A limit of 12,000 cycles between dry-irradiation and wet storage,

   In the July 23, 1984 letter you stated that, "Our estimated 30 year operation would result in about 12,000 cycles ...." Please include in your plan the records to be kept that would provide a history of the cumulative cycles of capsules between irradiation and storage. The plan should address, particularly, the cycling history of those capsules that are selected for destructive testing.

3. The frequency of testing, rationale for selection of capsules to be tested, the analyses to be carried out, and test reporting procedures.

   In the July 23, 1984 letter you stated that you are in full agreement with the approach of "a capsule monitoring program whereby periodically a capsule would be removed and returned for analysis ...." Accordingly, the testing plan should include a rationale, on a statistically supportable basis, for the selection of the WESF capsules to be tested. The Department of Energy (DOE) has suggested that a capsule would be removed ahnually and subjected to destructive evaluation. We agree that annual testing is important for the first five years of operation. Thereafter, frequency of testing should be predicated on the results of destructive analysis. Thus, the testing plan should include a sampling frequency that "ensures early warning of a potential long-term problem." The plan should be re-evaluated every five years to coincide with the five-year license renewal process. The plan should also identify both the destructive and non-destructive analyses to be carried out. As a minimum, the analyses should be equivalent to those described in PNL-4847, "Cesium Chloride Compatibility Testing Program Annual Report - Fiscal Year 1983," by G. H. Bryan. The test results should be made available in a letter report to NRC. The test plan should include the reporting procedure by which RSI will inform NRC in a timely manner of the results of these periodic analyses.

4. An action plan and action levels based on test results.

   The purpose of the testing program is to anticipate problems related to the use of WESF capsules. Therefore, the plan should include the identification of a threshold or level of corrosion effects that limit the useful life of the capsules. The plan should also describe the disposition of capsules if, and when, the threshold has been reached.

5. Documentation of a commitment to test capsules according to the subject testing plan.

   RSI shall provide NRC with a copy of a letter, signed by a responsible authority, that commits to the long-term testing of WESF capsules in accordance with the above plan.

C. The effects of loss of capsule integrity can be significant due to the solubility of CsCl and the specific activity of Cs-137. Therefore, the application must address emergency procedures and systems that anticipate this unlikely occurrence. These shall include:

1. A storage pool cleanup system, including shielding, that is capable of removing cesium from pool water,

2. Continuous monitoring of gamma radiation emanating from cleanup resin columns,

3. A plan for disposal of contaminated resins,

4. Procedures for operation of cleanup systems under radioactively contaminated conditions,

5. Procedures to be followed in the event that monitored capsules exceed CsCl-316 L interface temperature of 200°C.

D. The application must address the ultimate disposition of spent WESF capsules. This address must include:

1. Documentation of a commitment to transport spent capsules from the location of use to the location of the ultimate receiver,

   At the end of life, as determined by the corrosion threshold, limited radioactivity or other causes, the capsules must be transferred to the point of ultimate disposal. In addition to the applicant's plan for this disposition, we require a copy of a letter, signed by a responsible authority, that commits to the transport of spent capsules from the point of use to the location of ultimate disposal.

2. Documentation of a commitment to receive, store, and/or otherwise dispose of spent WESF capsules.

   The NRC requires a copy of a letter, signed by a responsible authority, that commits to the reciept, storage, or other disposition of spent WESF capsules. If the commitment is made on the part of DOE, we will consider a commitment to receive at a DOE-controlled site as a commitment to disposal.

0761

RADIATION
STERILIZERS
INCORPORATED

'84 NOV -9 P4:32

November 8, 1984

Mr. James E. Ayer
Division of Fuel Cycle and Material Safety
U.S. Nuclear Regulatory Commission
7915 Eastern Avenue
Silver Spring, MD 20910

Dear Mr. Ayer:

Enclosed are my responses to your inquiries as stated in the letter signed by Bernard Singer dated October 15, 1984.

As suggested all of the requested charges in Appendix A were accomplished through new or replacement pages which were numbered and dated in reference to the August 30, 1983 application.

The responses to the questions raised in Appendix B are given on new pages. As you will notice, I have only responded to those questions which applied to our operation.

Certain questions will require responses from the D.O.E., and I have been in contact with Bill McMullen and John Jicha concerning them. A letter from Jicha should be sent to you which should be incorporated into this response, which addresses these concerns.

The D.O.E. letter will cover the testing program and the ultimate return of the capsules to D.O.E. at the end of their useful life.

Because of the uniqueness of this application, licensing has been pursued directly with your office since the Regions and Agreement States have deferred the decision to the NRC Washington office. Our expectation is that the Agreement States of California and Georgia, where we have facilities, will accept you decision.

8504240298 850408
NMSS LIC30
04-19644-01 PDR

Radiation Sterilizers, Inc., 3000 Sand Hill Road, Bldg. #4-245, Menlo Park, CA 94025 (415) 854-2800

Our Atlanta facility which is expected to go on line this month is the first facility designed to accommodate the WESF capsules, and it is our intention to use the Atlanta facility as the demonstration unit. The licensing office in Georgia has been notified of this intention as well as the D.O.E.

We anticipate that the Columbus, Ohio facility will be the second RSI plant to utilize the WESF capsules.

I trust that these responses in conjunction with the forthcoming letter from the D.O.E. will be sufficient to finalize the approval of this submission.

Sincerely,

Allan Chin

Allan Chin
President

AC/tb

'84 NOV -9 P4:32

Responses To Comments in Appendix A

Reference: October 15, 1984 Letter Signed by Bernard Singer

The attached pages should be substituted in the August 30, 1983 application. All changes were made to include the use of Cesium-137 in the Illinois and Ohio RSI facilities, as suggested in the referenced letter.

New pages were designated by small case letters following the page in the application to eliminate the need for a total page re-numbering, i.e. 37a, 37b, etc.

30

Attachment
Application for Byproduct Material License
Item No. 8 A-D

The only isotopes to be used in RSI licensed facilities in Schaumburg, IL and Westerville, OH are Cobalt-60 and Cesium-137. Only USNRC approved sources will be used. Our major sources for Cobalt-60 isotope sources are the Atomic Energy of Canada, Limited, AECL, Neutron Products, or the U.S. Department of Energy.

The Cesium-137, in the form of WESF capsules, will be obtained from the USDOE.

In any case, only USNRC approved source configurations will be used, and approval confirmed with the USNRC prior to purchase. All source elements will be doubly encapsulated in stainless steel.

Ref. Section No. 8 "Source Control System"

C-1

Attachment
Application for Byproduct Material License

Item No. 13a

The RSI Schaumburg, IL facility consists of a single building located at 711 East Cooper Court, Schaumburg, IL 60195. At the time of construction, this site was located in a new development, and did not have buildings on any of the adjoining lots.

The RSI Westerville facility consists of a single building located at 305 Enterprise Drive, Westerville, OH 43081 in the Green Meadows Corporate Park. At the time of construction, this site was located in a new development, and did not have buildings on any of the adjoining lots.

The only restricted area of both facilities will be the maze and gamma cell. The shielding was designed to provide less than 0.25 mR/hr at all external surfaces with a 10 MCi cobalt-60 source loading. RSI does not expect the maximum source loading to exceed 5 MCi of cobalt-60 in either facility. The shield will be capable of shielding up to 70 MCi of cesium-137, but only 35 MCi maximum are anticipated.

Ref. Section No. 5 "Biological Shield Calculations"
Section No. 14 "Property Description"

32

Attachment

Application for Radioactive Material License

Item No. 13c

This system utilizes a maze to permit the continuous passage of material into and out of the gamma cell. The maze was designed to have less than 0.25 mR/hr flux at the entrance for a 10 MCi cobalt-60 source loading. This design will also shield up to 70 MCi of cesium-137 to meet this requirement.

The entire shield for the maze and gamma cell is a poured concrete structure. The source storage pool in the floor of the gamma cell is 23' deep and made from stainless steel.

This facility utilizes four source racks that are stored at the bottom of the 23' deep storage pool when not in use. Electric winches on the roof of the gamma cell raise the source racks until they are centrally located in the gamma cell when product is to be processed. The penetrations through the roof for the source rack guide cables (4) and lifting cables (2) are lead shielded to eliminate scatter through the roof penetrations.

The entire conveyor system including product carriers and re-usable totes are all made from metal. There are no flammable materials within the cell other than the processed product contained within the metal totes.

The gamma cell is furnished with a smoke detection system located in the exhaust vent which, when activated, will shut down the ventilation fans, the conveyor system, and lower the source racks to the bottom of the pool. There is also a water sprinkler system within the gamma cell which will automatically turn on when the temperature in the cell exceeds the pre-set limits of the sprinkler heads.

Ref. Section No. 1 "General Description of Facility"
Section No. 2 "General Description of Conveyor and Material Flow"
Section No. 3 "Gamma Cell Safety System"
Section No. 5 "Biological Shield Calculations"
Section No. 8 "Source Control System"

Attachment
Application for Radioactive Material License

Item No. 13d

The RSI facility utilizes standard power and free conveyor components to transport product through the gamma cell. This system utilizes a zero pressure accumulation system within the cell. Three-tiered carriers are used to transport the product through the cell.

Each tote is loaded onto the bottom shelf and traverses the cell. Upon leaving the maze, the totes are automatically elevated to the second shelf and traverse the cell a second time. Upon leaving the maze, the totes are automatically elevated to the top shelf for a third pass through the cell, after which they are transferred off the carrier to a conveyor belt which transports them to the finished goods area.

There is no transfer of material within the gamma cell. All transfers from shelf to shelf are accomplished external to the maze where they are readily monitored. This feature adds significantly to system reliability since the major problem area in these systems is in the tote transfers. Most other systems attempt to make these transfers within the cell where any jam will result in a system shutdown before corrective action can be taken.

Cobalt-60 source elements are loaded into standard modules, which hold 10 elements in a flat array. From this point on, source inventory will be at the module level thereby reducing accounting by a factor of ten. Cesium-137 WESF capsules are loaded directly into tilt out containers in the source racks.

The source modules, rack, and all associated cables will be stainless steel. The main rack cables will be prestretched to minimize positioning errors with time.

The electric winches position the racks using built-in limit switches. They are designed to lower the sources by gravity whenever there is a power failure.

Attachment
Application For Radioactive Material License

Item No. 13e

The cobalt-60 source elements are placed into stainless steel modules, which are subsequently placed into a stainless steel source rack. The cesium-137 source elements are placed directly into tilt out containers in the source racks. The racks are positioned by stainless steel guide cables at either end to minimize lateral sway. The guide cables pass through the roof and are tensioned above.

A steel cage is built around the source racks to protect them from the product carriers. The distance between the source rack and the product carriers is approximately 12" which is considerably more than other facilities where this distance is typically 2" to 3". This distance substantially decreases the possibility of any interaction between the source rack and other elements of the system, thereby decreasing the probability of damaging the sources in the facility.

The product carriers are hung from an overhead track and the bottoms are aligned with floor guides as required to prevent lateral movement.

All product is contained within metal totes on the product carrier thereby preventing cartons from being dislodged and damaging the sources.

The main conveyor drive is equipped with an electronic motion monitor which prevents excessive forces to be exerted in the event of a conveyor jam. The motor is also reversible such that the conveyor can become unjammed by reversing the drive.

Ref. Section No. 2 "General Description of Conveyor and Material Flow"
Section No. 7 "Design Safety Analysis"
Section No. 8 "Source Control System"

Attachment
Application for Radioactive Material License

Item No. 131

The biological shields for the RSI Schaumburg and Westerville facilities were based on a similar design used for the Tustin, CA facility. Only background readings have been recorded at the 1.5 MCi source loading level. The shielding has been designed to provide less than 0.25 mR/hr at all external surfaces with a 10 MCi cobalt-60 source loading. This shield will be more than adequate to shield up to 70 MCi of cesium-137.

Ref. Section No. 3 "Gamma Cell Safety System"
Section No. 5 "Biological Shield Calculations"

36

Attachment
Application for Radioactive Material License

Item No. 14

The isotope racks have been designed for many years of operation before their capacity is filled. At that time, in order to maintain operating levels, the sources with the lowest activity will be removed and new high activity sources added.

Each new cobalt-60 source represents typically 6,000 to 10,000 curies. Each new cesium source represents typically 40,000 to 60,000 curies.

Spent isotope in all cases will be returned to the supplier for disposal.

Ref. Section No. 8 "Source Control System"

Description of the RSI Gamma Facility

RSI facilities are designed to sterilize prepackaged medical device products for the health care industry utilizing either a controlled cobalt-60 or cesium-137 source. The basic components consist of a biological shield, a source system, a safety system, and a conveyor system for transporting the material through the cell. The system is highly automated and controlled by a Texas Instruments programmable controller.

In all cases, the biological shield is designed to meet the requirements of a non-controlled area, with radiation emission rates less than 0.25 mR/hr. It consists of a concrete cell and an entrance maze to allow access by a continuous overhead conveyor. A deep water pool below floor level is used for isotope storage. A detailed description of the biological shield is presented in Section No. 5.

The cobalt-60 and cesium-137 source elements are generally doubly encapsulated, welded stainless steel pencils. Typically the cobalt-60 sources would be AECL C-188 source elements, although similar sources could be used from other isotope vendors. The cesium-137 sources would be typically in the form of WESF capsules supplied by the USDOE. These sources are delivered to the RSI facility in DOT-approved shipping casks from the isotope suppliers.

Professional crane operators transfer these casks from truck trailers to the bottom of the deep storage pool via an opening in the roof of the gamma cell. The opening is normally shielded with either a steel or concrete plug. The source elements are removed from the cask and loaded into the source racks while under the protective layer of water.

When cobalt-60 sources are used, up to ten source elements are loaded into a module prior to transfer to the storage racks. The cesium-137 sources are loaded directly into the racks. The facilities utilize two source racks each, the Schaumburg racks are 15 feet long, and the Westerville racks are 12 feet long. Stainless steel guide wires are used on either end of the source racks to control

their positions. Electric winches, located on the roof of the gamma cell, raise and lower the racks with limit switches controlling the vertical position of the source racks. In the event of an electrical failure, the winches will automatically lower the sources to the bottom of the pool using gravity and a friction clutch.

When the facility is in use, the source racks will be centered vertically on the product carriers. Access to the room is obtained by lowering the source racks to the bottom of the pool.

The storage pool is 23 feet deep, 23 feet long, and 6 feet wide in Schaumburg, IL. The pool in Westerville is 23 feet deep, 18.5 feet long and 6 feet wide. They are constructed of reinforced concrete with an 0.125-inch thick stainless steel liner. The water in the pool will be de-ionized and filtered by circulating it through a water treatment system located adjacent to the cell. The level in the pool is controlled within preset limits with abnormally high and low level warnings. All penetrations in the pool lining are within the top 12 inches.

The components within the pool are constructed of stainless steel to minimize corrosion. Some of the external plumbing will be plastic.

The safety system has been designed to meet or exceed all of the requirements for facilities of this type. A detailed description of the safety system is given in Section No. 3.

Material to be processed is conveyed through the cell on three-tiered carriers supported by an overhead power and free conveyor system. Product is loaded into metal tote boxes which in turn are loaded onto the bottom shelf of the three-tiered carrier. To obtain maximum dose uniformity to the product, each tote passes through the radiation cell three times, once at each shelf level. The totes are automatically elevated one level after each pass through the cell. After the third pass, they are automatically removed from the carrier and transported to the unloading area. Refer to Section No. 2 for a detailed description of the conveyor operation.

The design of the Schaumburg facility was performed by the architectural firm of Baranyk-Popowych Associated, 710 Higgins, Park Ridge, Illinois 60068 (312-693-5757). The

30,000 square foot facility was designed and built to meet all local structural and seismic requirements.

The design of the Westerville facility was performed by the architectural firm of John Cathers, 6877 North High Street, Worthington, Ohio (614-885-2794). The 20,000 square foot facility was designed and built to meet all local structural and seismic requirements.

40

Biological Shielding Calculations

The biological shields for the RSI Schaumburg, IL and Westerville, Ohio facilities were designed to provide less than 0.25 mR/hr dose rates at all external surfaces, and at the entrance to the maze, with a 10 megacurie cobalt-60 source or a 70 megacurie cesium-137 source loading. During operation, the sources are stored in two vertical source racks centrally located in the gamma cell.

When not in use, the racks are lowered to the bottom of a 23 foot deep stainless steel tank filled with water.

Conservative design criteria were used throughout. Actual field checks of radiation levels in and around other RSI facilities, designed to similar criteria, have shown effectively zero radiation leakage with cobalt-60 source loadings up to 1.6 megacuries.

The cell and maze design are shown in Drawing Nos. RSI 2-100 and RSI 2-101 for Schaumburg and Drawings Nos. 502-600 and 502-601 for Westerville.

All calculations and layouts have been checked and approved by Mr. Eugene Tochilin, CHP, Certificate No. 60-166. Calculations are provided only for 10^7 curies of cobalt-60. The shielding thicknesses required for cesium-137 are about 70% of the thicknesses required for cobalt-60. This calculation therefore represents the worst case condition.

The following assumptions were made for these calculations:

1. The Co^{60} activity will be 10^7 curies or less.

2. A nominal exposure rate of 1.2 R/hr at one meter per curie of activity has been used. For shielding calculations, the entire activity is taken to be a point source central to the source racks.

3. A self absorption factor has been applied for radiation transmitted through the roof and through the end walls. A factor of 1/4 has been used.

cables to be relieved in the unlikely event that a rack jam does occur, thereby increasing the chances of dislodging and freeing the jam. Rods may also be run down the cable guide openings in the roof to assist in freeing the rack if necessary.

To further assure that the product carrier does not contact the source racks, a metal protective cage is built around each source rack. The conveyor drive cannot overdrive in the event of a jam because of a built-in jam detector. The drive is also reversible which allows jamming pressures to be relieved.

Source Carry Out

Provisions have been made to prevent the improbable event of a source being carried out by the carrier from the cell to the loading area. In order for this event to occur, the following must happen: The source must be dislodged from the source module contained in the source rack, bridge the 12" separation to the carriers, and attach itself to the carrier which presents a relatively smooth surface to the sources. However, if this does happen, it will be detected by the radiation detector located in the middle of the maze which will stop the conveyor and lower the source rack to the bottom of the pool. All personnel will be excluded from the maze, and the RSO will take full charge to formulate the steps necessary for the safe removal of the source of radiation.

Source Break in the Pool - Cobalt-60

If a cobalt source ruptures due to any reason, the cobalt pellets would fall into the pool. Some corrosion product radioactivity might be released to the pool water which would be detected by monitoring at the water treatment area and through pool water samples. De-ionizing columns would be used to remove the soluble contaminants from the pool water. The cobalt pellets could be removed with magnets or suction devices under the direction of the RSO and the source vendor. These would be loaded into a cask and returned to the vendor for further processing or disposal.

42

detector, and if either is activated, the source will be lowered, the conveyor stopped, and the ventilation fans turned off.

Source Leak - Cesium-137

The probability of a leak in a WESF capsule is far less than for a cobalt-60 source. The major reason being that the WESF encapsulations are each 0.136" thick compared to 0.020" to 0.030" thick encapsulations for cobalt-60. The cesium is in the form of a fused cesium chloride which is water soluble. Tests have indicated that the diffusion of cesium chloride through small holes in double encapsulations is slow. Monitors at the ion exchange column will detect low level leaks in the capsules. If this occurs, ion exchange techniques successfully used to clean up cesium from Three Mile Island will be used to decontaminate the pool water.

The leaky source will be identified and removed and returned to the DOE.

Source Control System

Cobalt-60 Sources

The basic Co-60 source element in this system is typified by the AECL C-188 source rod as shown on the accompanying drawing. Other source elements may also be used as manufactured by G.E., Neutron Products, or other approved encapsulators. Each element will be permanently identified with a serial number and its location in the system will be controlled at all times.

Upon receipt at the facility, up to ten sources are placed into one of the source modules. These modules are permanently identified and contain the sources in a flat array. From this moment on, the sources will not be removed from the module, and the basic inventory control will be at the module level. Control and records will therefore be reduced by a factor of ten

Individual sources are traceable through module loading records, a copy of which is attached. The source position is equivalent to the loading order of the sources into the module. As modules are shifted within the source racks, their new locations are noted on the source control sheet.

The source modules are loaded into channels within the source racks. The RSI system utilizes two source racks with each rack containing approximately 26 module channels. Each channel is designed to be contain three modules stacked one upon the other.

The maximum cobalt-60 capacity of the Schaumburg system is 1920 sources. The maximum capacity of the Westerville facility is 1560 sources.

44 All module loading will be controlled by, or under the supervision of, the RSO or an authorized user of the isotope. The following procedure will be generally followed:

Cesium-137 Sources

The cesium source elements will be the WESF capsules produced by the DOE at Richland, WA. A drawing of the WESF capsule is included for reference. Each source will be serialized for identification by the supplier.

The cesium source rack is designed to be used with the WESF capsules exclusively or in combination with cobalt-60 source modules. Drawings 502-584 and 502-585 show the construction of the cesium source racks. The only difference between the Schaumburg and Westerville racks is the length: 15 feet versus 12 feet.

Because of the size and weight (20#) of the WESF capsules, they are handled individually and loaded directly into the source rack. Tilt out modules are used which hold either 6 WESF capsules or two cobalt-60 modules as previously described.

Initial shipments of WESF capsules will be via G.E. type 1500 series casks since these are the only approved casks. As other casks are approved, they will be considered for use.

All source loadings will be performed by or under the supervision of the RSO or an authorized loader of the isotope. The following procedure will be generally followed.

1. Source casks will be delivered to the facility on an open top trailer in approved casks such as the G.E. Series 1500 containers. Survey the cask for excessive leakage upon receipt.

2. Check paperwork to assure that it is in agreement with the purchase order.

3. Remove the heat shield.

4. Perform leak test on the cask by running water through the cavity and monitoring the water. If activity is detected, notify the vendor and re-seal the cask. If no activity is detected, proceed.

5. Leave vent and drain plugs off to allow the cavity to fill as the cask is lowered into the pool. Retain the plugs for installing after the sources have been removed.

6. Unbolt cask from shipping skid.

7. Loosen, but do not remove, cover bolts.

8. Attach cable for cover removal.

9. Attach the cask sling.

10. Remove the roof plug with the mobile crane rented for the loading operation and place on the roof over one of the shielding walls.

11. Lift the cask with the crane from the truck and lower it slowly through the roof access into the pool in the floor of the gamma cell.

12. Avoid the upper cask vent since steam may be generated and ejected from this opening as the cask is lowered into the pool water.

13. When the cover is 6" above the water level, remove the cover bolts.

14. Continue to lower cask slowly to the bottom of the pool.

15. Unhook the cask sling from the hoist.

16. Hook cover sling onto hoist.

17. Remove cover and check for contamination as it clears the water.

18. Place cover on the roof and remove the sling from the crane hoist.

19. Using a long handled, vented hook tool, remove the source cage from the cask and place it on the floor of the pool. Monitor radiation levels at the pool surface.

20. Load sources into the source rack after checking the serial numbers.

21. Document loading on source control sheets.

22. Replace source cages into shipping cask.

23. Re-attach the cask lifting sling.

24. Slowly raise cask.

25. Check cask for contamination as it clears the water.

26. Re-insert drain plug as the bottom clears the water.

27. Place cask on skid and bolt down.

28. Remove drain plug and drain into bucket. Check water.

29. Replace cover and bolt down.

30. Insert top and bottom plugs.

31. Replace fire shield and bolt down.

32. Repeat steps 1-31 for each cask.

33. Remove all radioactive materials labels from the casks.

34. Cover caution tags on casks with shipping labels for return shipment.

35. Replace roof plug.

36. Run survey around facility with sources in the operating position.

37. Take sample of pool water for leak testing.

Source Control Procedure

Source control will be maintained at all times on each WESF source capsule. Data will be maintained on separate control sheets.

Each tilt out module is designed to contain 6 capsules, 3 in each side. Source location will be by module, by side, by position. Modules are numbered from the top left corner from left to right and top to bottom. Module sides are designated as left or right. Source positions are 1,2,3 reading from left to right within each side.

Comingled Sources

It is possible that the initial isotope loading into an RSI facility will be exclusively cobalt-60 in order to rapidly get on line. The source racks will be designed as shown in Drawing No. 502-584 and 502-585. The cobalt pencils will be loaded into cobalt source modules which contain up to ten pencils in a flat array. These modules will then be loaded into the tilt out containers in the source rack. Two modules will be loaded per container in the central horizontal row.

Specific RSI facilities will be designated to operate primarily with cesium-137 and others with cobalt-60. When sufficient cesium-137 is loaded into a facility, the initial startup cobalt-60 will be transferred to a licensed RSI designated cobalt-60 facility.

All RS. facilities will operate in a product overlap mode which simplifies the isotope management problem. Whenever long term usage of cobalt-60 and cesium-137 in a single plant is necessary, the cobalt-60 will be loaded into the central horizontal row of the rack.

SOURCE MATERIAL	FORM	LOADING	PERCENT OF THEORETICAL DENSITY BASED ON TOTAL VOID SPACE OF CAPSULE
CESIUM CHLORIDE	MELT-CAST	70 RD	[illegible]

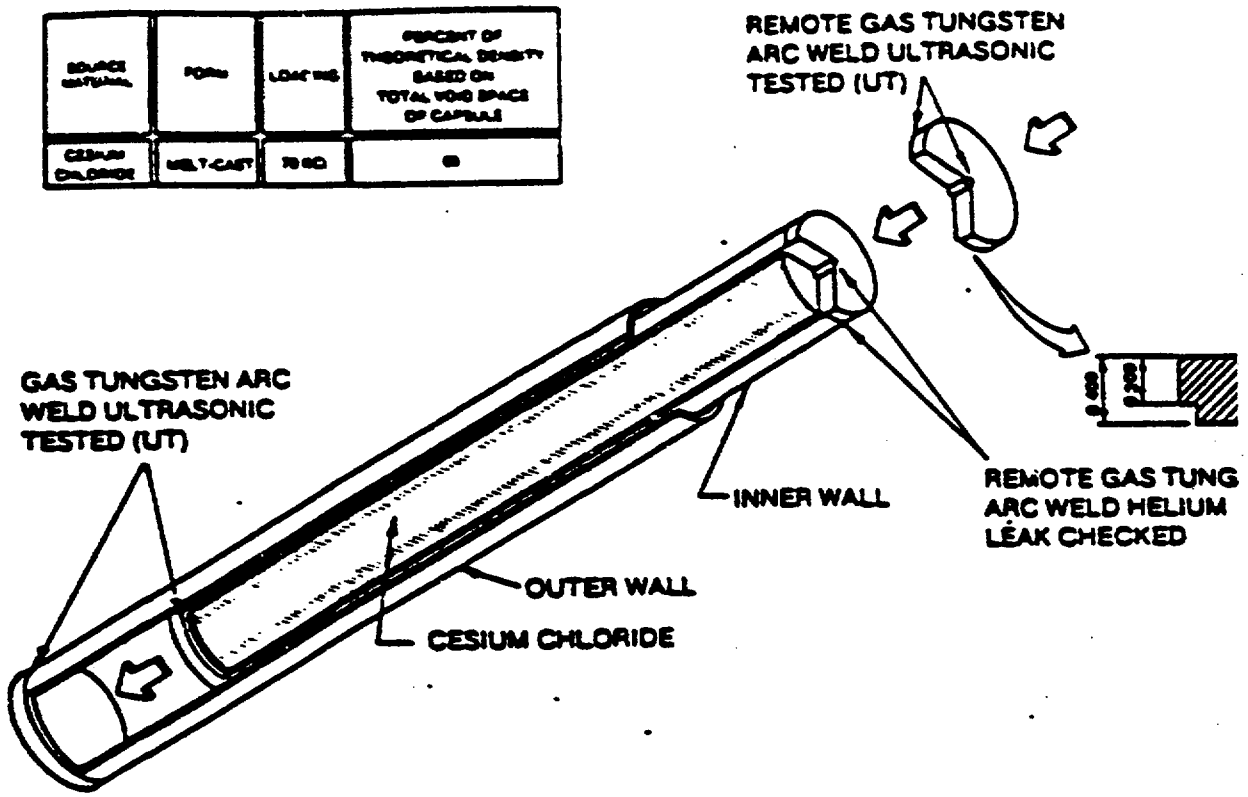

SOURCE MATERIAL	CAPSULE									
	INNER					OUTER				
	MATERIAL	WALL THICKNESS	OUTSIDE DIAMETER	TOTAL LENGTH	TOTAL CAP THICKNESS	MATERIAL	WALL THICKNESS	OUTSIDE DIAMETER	TOTAL LENGTH	TOTAL CAP THICKNESS
CESIUM CHLORIDE	316L STAINLESS STEEL (UT)	0.120 (UT)	2.359	10.725	0.400	316L STAINLESS STEEL (UT)	0.120 (UT)	2.659	10.773	0.400

NOTE: ALL DIMENSIONS ARE IN INCHES

Figure 4

WASTE ENCAPSULATION AND STORAGE FACILITY (WESF) CAPSULE

1500 Series Certificate No. 3939 (& L.A.E.A. Certified)
Cask Weight 12,000 Lbs. - 5433 Kgs.
Assembly Weight 13,160 Lbs. - 6890 Kgs.
Assembly Drawing No. 106D3870G1
Mode of Transportation - ALL EXCEPT PASSENGER AIRCRAFT
Heat Load at 100°F Ambient 3120 Watts
Radio Load 300/300/300 Grams as Radio Class B
Heat Load at 106°F Ambient 600 Watts

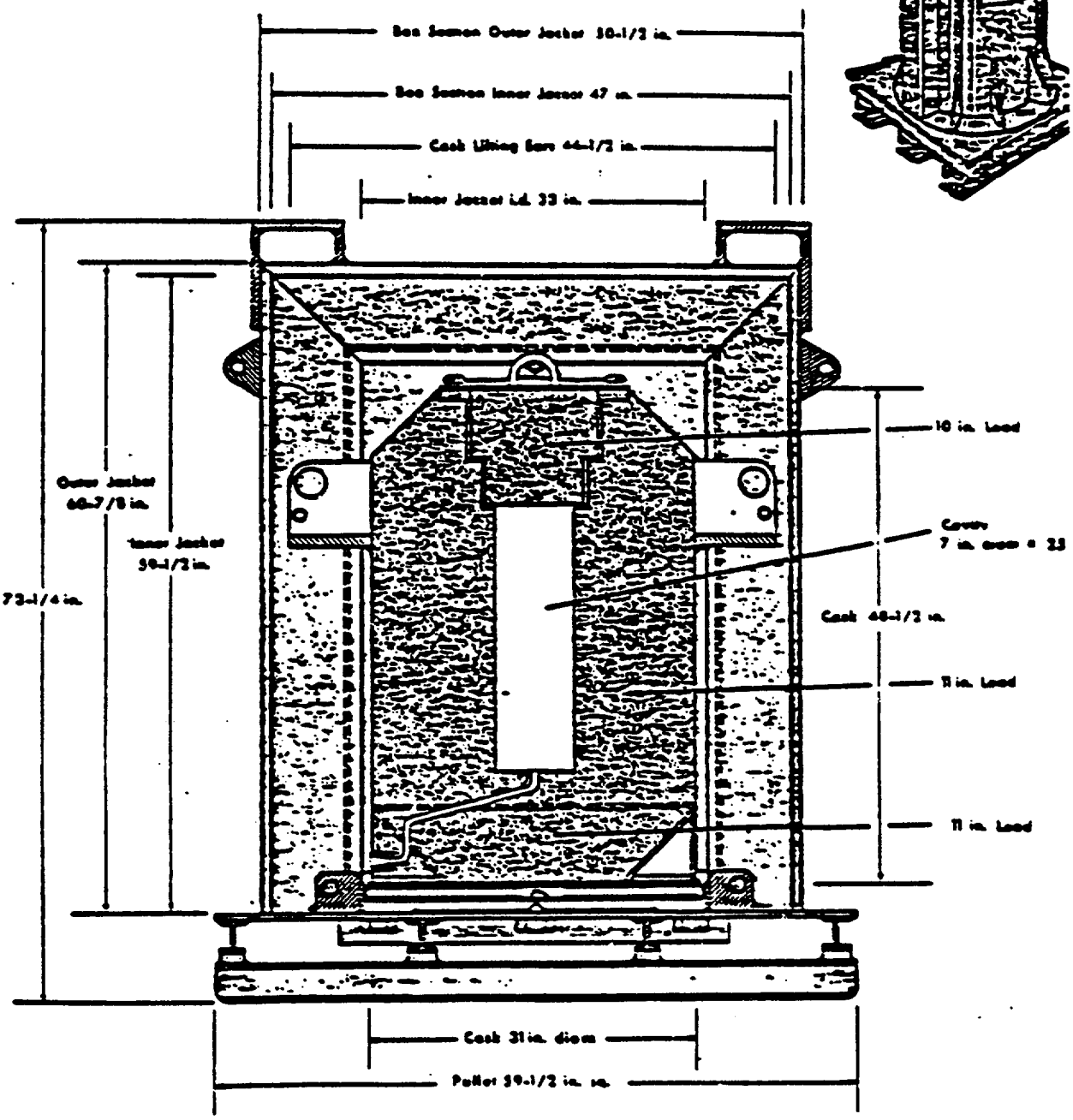

GENERAL ELECTRIC - MODEL 1500 SHIELDED CONTAINER

The water level in the pool is controlled at the sump located outside the cell in the water treatment area, since they are hydraulically connected with a 1" stainless steel pipe. Immersion electrodes in the sump will actuate a solenoid valve on the make-up line to control the pool level within control limits and alarm at abnormally high or low levels.

A timer on the make-up solenoid will indicate if excessive amounts of water are being used, which would be indicative of a water leak.

The water chiller is an optional piece of equipment which should be added at high curie loadings. The heat generated from one megacurie of cobalt-60 is 15KW. Since the source is only in the water less than 5% of the time, the heating effect on the water should be minimal.

Water chillers should be considered when cobalt-60 isotope loadings approach two megacuries and when cesium-137 loadings approach six megacuries, where the equilibrium water temperature will be approximately 100 - 110 degrees Fahrenheit.

A pipe from the main water line is connected to the return line which may be used to maintain the pool level in the event of a gross leak. This line is equipped with an anti-siphon valve to prevent inadvertant draining of the pool.

Responses To Comments in Appendix B

Reference: October 15, 198- Letter Signed by Bernard Singer

Item B.1

The statement made in the July 23, 1984 letter, "The interface temperature in my application is not expected to exceed 200 degrees Centigrade", is a correct statement based upon all previous available information. Both actual measurements and analytical calculations support the contention that the surface temperatures in air will be in the range of 80° C to 130° C, which was the basis of my statement. Most of these temperatures were for horizontal capsules in stagnant air. In the RSI application, the capsules will be vertical and the facility ventilated at a rate of 400 CFM. Both of these conditions should result in lower capsule temperatures.

The expressed opinion of PNL scientists is that a 300° C interface temperature is a reasonable safe interface temperature. Additionally the 300° C temperature was specified in Mr. Ayers letter to Mr. Adams dated September 14, 1984.

We feel that the 300° C interface limit is reasonable based upon all existing test data, and would request that this limit be adopted for the RSI applications.

This 300° C limit, if adopted, is so much higher than any measured or calculated temperature for WESF capsules in similar applications, that we do not see the necessity to monitor temperature levels.

The techniques and methods for measuring these temperatures would either have large inaccuracies in the measurement or compromise the safe operation of the facility.

Most measurements and analyses have been on single capsules. An analysis made by Mr. Marvin E. Morris and reported in SAND79-2240 reported that the effect on temperature of any capsule is virtually unaffected by adjacent capsules as would exist in a source rack.

Based upon the above arguments, we request that the maximum interface temperature level be increased to 300° C and the requirement for measuring and monitoring the capsule temperatures be deleted unless subsequent design or operational changes could result in conditions where higher temperatures would result.

Item B.2

An accumulating counter is incorporated into our system controls

which will indicate at any time the total number of times that the source rack has been lowered into the water storage pool. The 12,000 cycle requirement is well within the capacity of the counter.

Records will be maintained on capsule identification, loading dates, and thermal cycles for each capsule.

Item B.3

This item is covered in a letter from the USDOE. The test plan will be described by DOE. RSI agrees to cooperate with DOE in the selection and return of the test capsules to the DOE designated laboratory.

Item B.4

This item is covered in a letter from the USDOE.

Item B.5

This item is covered in a letter from the USDOE.

Item C.1

Two types of capsule failure are anticipated. The first is a small leak due typically to a weld failure or crack. In this situation, the problem will be detected through early warning gamma or beta detection of the pool water. Leakage rates will be low enough to permit personnel access to the shielded cell with the sources in the water storage position.

Ion exchange resin columns, shielded by casks or concrete will continually remove activity from the water while operations to identify the leaking source are in process.

Techniques similar to those developed by the DOE at Richland for detecting and removing leaky sources will be employed. Each capsule will be loaded into a sealed closed loop system filled with water. The re-circulating water will be monitored for activity buildup indicating a leaky source.

Once the leaky source is identified, it will be sealed into a container and loaded into a shipping cask for return to DOE. The second type of capsule failure would be termed catastrophic and result in radiation levels above the storage pool which would prevent personnel access. This type of failure would typically be caused by mechanical failure of both capsule walls, thereby exposing large quantities of CsCl to the pool.

In this situation, shielded ion exchange columns would be used external to the cell to remove the activity from the water. The contaminated exchange resins would be treated as solid waste and buried in commercial sites.

When the activity in the cell has been reduced to safe levels, the procedures described for a small failure will be followed.

In both instances the facility will be decontaminated as necessary prior to resumption for operation.

Item C.2

Continous monitoring of the resin cleanup columns will be performed to determine when they must be removed and replaced. Gamma monitors and survey meters will be used for this purpose.

Item C.3

Contaminated resins will be removed as solid waste and shipped to commercial burial sites. Typically the resin columns will be cast into concrete which serves as the shielding and shipping container.

Item C.4

Reference C.1 above.

Item C.5

Reference B.1 above. Generally if a condition occcurs which would indicate that an interface temperature exceeding 300 C has been reached, DOE and NRC will notified for disposition.

Item D.1

The WESF capsules will be leased to RSI. The conditions of the lease require that RSI return them to DOE at the end of life, as determined by DOE.

The conditions covering the return of the capsules is covered in a letter form the USDOE.

Item D.2

This item is covered in a letter from the USDOE.

DEC 10 1984

Distribution:
Docket File
NMSS R/F
FCMC R/F
FCAF R/F
BSinger
bcc: JJicha, DOE
G. Tingey
RECunningham
DWoodruff, Region II
DANussbaumer, SP
WJAdam, Region III
JEAyer

Radiation Sterilizers, Inc.
ATTN: Mr. Allen Chin, President
3000 Sand Hill Road
Building No. 4-245
Menlo Park, California 94025

Gentlemen:

The purpose of this letter is to respond to yours of November 8, 1984 related to the amendment of License 04-19644-01 which would authorize the use of WESF capsules in your Schaumburg, Illinois, and Westerville, Ohio, facilities. In that letter you stated that you intend to use the WESF capsules in a demonstration at your Atlanta, Georgia, facility. Since the State of Georgia is an agreement state, and thereby has independent licensing authority, you must apply to its offices for the appropriate license. Because you intend to use your Atlanta facility as the WESF capsule demonstration for dry-irradiation/wet storage, we will take no further action on your outstanding request for amendment to License 04-19644-01.

If you have any questions pertaining to the above, please feel free to call James E. Ayer (301/427-4205) or me.

Sincerely,

Bernard Singer, Chief
Materials Certification and
Procedures Branch
Division of Fuel Cycle and
Material Safety

55

cc: Robby G. Rutledge, Director
Radiological Health Section
Department of Human Resources
1256 Briar Cliff Road, Room 425 South
Atlanta, Georgia 30306

8504240183 850408
NMSS LIC30
04-19644-01 PDR

OFFICE	FCAF	FCMC					
NAME	JEAyer:flb	BSinger					
DATE	74205 12/10/84	12/10/84					

return orig to J. Ayers 0821

RADIATION
STERILIZERS
INCORPORATED

December 14, 1984

Mr. Bernard Singer
U.S.N.R.C.
Willste Building
7915 Eastern Avenue
Silver Springs, MD 20910

Dear Bernie:

This letter requests that you continue action relative to my recent November 8, 1984 letter related to the Amendment of License No. 04-19644-01.

Due to changes in our plant schedules, RSI will use the Westerville, Ohio facility as the demonstration unit for the WESF Capsules.

I apologize for any confusion which I may have caused, and I will be contacting Jim next week concerning this amendment.

Sincerely,

Allan Chin

Allan Chin
President

AC/jp

56

84 DEC 19 P4:06

8504240199 850408
NMSS LIC30
04-19644-01 PDR

Radiation Sterilizers, Inc., 3000 Sand Hill Road, Bldg. #4-245, Menlo Park, CA 94025 (415) 854-2800

Battelle
Pacific Northwest Laboratories
P.O. Box 999
Richland, Washington 99352
Telephone (509) 375-2419
Telex 15-2874

'85 JAN 28 P3:10

January 23, 1985

Mr. Jon Reuscher
Sandia National Laboratory
Division 6450
Albuquerque, NM 87185

Dear Mr. Reuscher:

EXAMINATION OF WESF CESIUM-137 CAPSULES USED IN SIDSS

We have completed an optical metallographic examination of corrosion specimens taken from the two subject capsules. Since there is interest in these data for the licensing and operation of irradiators using cesium capsules, it is appropriate to briefly describe the results pending publication of the report to be issued jointly by SNL and PNL in a few months.

These capsules (C-73 and C-74) were encapsulated at the Waste Encapsulation and Storage Facility (WESF) at Hanford in September, 1975. In July 1978, they were transferred to Albuquerque and used in the Sandia Irradiator for Dried Sewage Solids (SIDSS) from then until April 1984, when they were sent to Hanford for examination. Thus, the capsules were maintained at relatively low temperature (80 to 100°C capsules/salt interface) for 34 months and at irradiator temperature (150 to 200°C interface) for 69 months.

Upon opening of the capsules, the radioactive salt was dissolved from the capsules and four samples cut from each inner capsule wall for corrosion examination. Mechanical thickness measurements were first made on each sample prior to polishing and metallographic examination. The thicknesses measured on the sample clustered around the nominal specified thickness wall, and in every case, was well within the specified tolerance. Microscopic examination showed a maximum corrosion pitting of less than 0.001 in. on any of the samples. This corrosion is comparable to that measured from the "zero time" capsules studied by Bryan in conjunction with the 450°C tests. The "zero time" capsules were examined after filling in the normal process, but were then examined to determine the extent of corrosion which occurred. This corrosion of less than 0.001 in. was due to interaction with the molten salt initially at 700 to 730°C, and then cooling for one hour.

57

From these studies, we conclude that the corrosion rate is so small at the temperature experienced in SIDSS that corrosion cannot be observed even after nearly six years at temperature. This observation seems to be consistent with corrosion studies at 450°C on actual WESF capsules and at 800°C on capsules containing a simulated nonradioactive salt. Since earlier corrosion experiments on 316L stainless steel with pure cesium chloride showed very low rates at temperatures as high as 600°C, we conclude that the high temperature

Battelle

corrosion (800°C and 450°C) is due to impurities rather than CsCl itself. The temperature coefficient of this reaction is apparently so large ($E^* \approx 40$ kcal/mole) that no reaction can be observed at SIDSS capsule temperatures. These data suggest that capsule-salt interface temperatures up to 300 or 350°C should be acceptable for continuous capsule operation.

We have also evaluated the salt composition in the capsules and will be completing examination of the welds shortly. We have also discussed the results with Dan Sasmor of your staff in preparation of final reporting.

Thank you for your continuing interest in this study.

Very truly yours,

Garth L. Tingey
Ceramics Technology and Nuclear
Byproducts Section

GLT/tf
cc: J. Ayer - NRC
M. Dayani - DOE-RL
J. Jicha - DOE-HQ
W. McMullen - DOE-AL
H. Ransom - DOE-RL
D. Sasmor - SNL

JEA

FEB 1 1985

MEMORANDUM FOR: Donald A. Nussbaumer, Assistant Director
for State Agreements Program
Office of State Programs

FROM: Richard E. Cunningham, Director
Division of Fuel Cycle and Material Safety
Office of Nuclear Material Safety and Safeguards

SUBJECT: STATUS OF WESF CAPSULES

The purpose of this memorandum is to document Office of Nuclear Material Safety and Safeguards (NMSS) staff evaluation and conclusions regarding acceptability of WESF capsules for licensing as you requested in your memorandum of December 13, 1984.

After several meetings with Department of Energy (DOE) staff, the NRC agreed that a determination of the licensability of byproduct use should draw upon the evaluation of results of demonstration. Furthermore, we offered to review license applications for demonstration projects sponsored by DOE. These positions are documented in a letter to John J. Jicha, Jr., of the DOE from R. E. Cunningham, dated April 3, 1984.

Large commercial irradiators, such as those used for medical product sterilization, fall into two general categories defined by design and operation. These are (1) wet load, dry storage, dry irradiation and (2) wet load, wet storage, dry irradiation. In the first case, the irradiation is carried out in air; when the irradiation duty cycle is over the source arrays are stored in air. Loading and unloading of source capsules into or from arrays is carried out in a gamma shielded, water pool.

The acceptability of WESF capsules used in the wet load, dry storage, dry irradiation mode has been successfully demonstrated in the Sandia Irradiator for Dried Sewage Solids (SIDSS). The SIDSS has been in operation since April 1979. Our staff has visited and observed the facility. A final safety analysis report, SAND 79-2240, that describes the SIDSS and assesses the hazards associated with its operation has been reviewed by NMSS staff. WESF capsule examination including container mechanical properties, salt composition, and corrosion effects have been conducted on capsules at SIDSS start-up and after five years of operation. The capsules after five years of operation show no effects significantly different from the start-up capsule condition. Furthermore, it is the DOE plan to periodically examine, for several years, capsules from the SIDSS to confirm their integrity in that irradiator application. Based on our observations and evaluations of the above, we conclude that the WESF capsules are suitable for use in facilities licensed to operate in the wet load, dry storage, dry irradiation mode.

8504240210 850408
NMSS LIC30
04-19644-01 PDR

The acceptability of WESF capsules for use in the wet load, wet storage, dry irradiation mode has not yet been demonstrated to our satisfaction. A commercial irradiator has expressed an interest in performing as a demonstration facility. DOE and NRC are in the process of defining such conditions as a capsule testing program, irradiator operating limits, and action plans preliminary to the DOE formulation of a lease agreement. We will keep you informed of significant decisions as they are reached.

Richard E. Cunningham, Director
Division of Fuel Cycle and
Material Safety
Office of Nuclear Material Safety
and Safeguards

Original Signed by
Richard E. Cunningham

Distribution: FC-167

FC Central File	RECunningham
NMSS R/F	RWoodruff, Region II
FCAF R/F	WJAdam, Region III
VMiller	JFAyer
JHickey	LCRouse
BClausser	FBrown
DRChapell	

MB25

FCAF	FCAF	FCML	FCML	FC	FC
JEAyer:flb	LCRouse	JHickey	VMiller	DRChapell	RECunningham
2/6/85					

To concurrence
4/3/85

Mr. John J. Jicha, Jr., Director
R&D and Byproducts Division
Office of Defense Waste
and Byproducts Management
Department of Energy
Washington, D.C. 20545

Dear Mr. Jicha:

The purpose of this letter is to document the understanding and agreements between the Department of Energy (DOE) and the Nuclear Regulatory Commission (NRC) staff relative to the licensing of a commercial facility to act as a demonstration of the use of WESF capsules in a wet storage-dry irradiation mode. This understanding and agreements are based upon your letter of July 25, 1984 to me, discussions between Bill Remini of your staff and Jim Ayer of mine, and the lease agreement to be entered into between the DOE and the licensee.

- As a part of the DOE testing program, capsules will be periodically provided to DOE by the licensee for examination. Capsule selection and testing will be no more frequent than one per year for the first ten years and no less frequent than the first, third, sixth, and ninth year after first use. Since the lease agreement is to be renegotiated after ten years, subsequent testing and sampling plans will be reviewed at that time. Capsule selection shall be made with the concurrence of DOE and shall include consideration of capsule temperature and use history.

- Because corrosion rate is a function of temperature it is important that the thermal history of the capsule selected for testing be known. Thus, the demonstration shall include temperature monitoring of the surface of a capsule at the most restrictive location in the source array. The most restrictive location is construed as the site of the capsule that is at the highest temperature. As an alternative the site of a capsule selected in advance for testing may be chosen as the monitored location. The method of monitoring shall be approved by DOE and NRC.

- During the lifetime of use in the irradiator the surface temperature of the monitored capsule shall not exceed 300°C and the limit of thermal cycles between air and water shall not exceed 12,000.

8504240221 850408
NMSS LIC30
04-19644-01 PDR

OFFICE							
SURNAME							

- As a minimum, the tests and analyses carried out on selected WESF capsules by DOE shall be equivalent to those described in PNL-4847, "Cesium Chloride Compatibility Testing Program Annual Report--Fiscal Year 1983," by S. H. Bryan, which include examination for corrosion of the inner capsule. The test results shall be made available in a letter report from DOE to the NRC.

- The lease agreement requires return of WESF capsules to DOE "in the event that the destructive analyses of any WESF capsule removed from the lessee's facility ... indicates detrimental effects which would potentially jeopardize safe facility operation ...." We agree that corrosive penetration of 25 percent of the inner capsule wall constitutes detrimental effect sufficient to warrant resampling and examination or return of all WESF capsules to DOE's control.

Based on the above understanding and agreements, we will continue with our licensing activities relative to demonstration of WESF capsule use in a commercial irradiator. Where appropriate the license for the demonstration irradiator will be conditioned to reflect the foregoing agreements. If you have any questions or do not concur with the above understanding, please let us know as soon as possible.

Sincerely,

Richard E. Cunningham, Director
Division of Fuel Cycle and
Material Safety
Office of Nuclear Material
Safety and Safeguards

Distribution:
FC Central File
NMSS R/F
FCAF R/F
RECunningham
LCRouse
bcc: WRemini, DOE
JEAyer
JHickey
VLMiller
D. Vonkeman
J. Glenn
J. Fortier
E. Hallett
J. Everett
R. Montgomery

V-A-28, A-29 *see prior concurrence attached.

OFFICE	FCAF	FCML	FCML	FCML	FC		
SURNAME	JEAyer:ob/fb	JJHickey	VMiller	DRChapell	RECunningham		

APR 9 1985

FCL:JH
030-19025
(16624)

Radiation Sterilizers, Inc.
ATTN: Dr. Allan Chin, President
3000 Sand Hill Road, Building 4-245
Menlo Park, CA 94025

Dear Mr. Chin:

This refers to your letter dated April 3, 1984, requesting an amendment to License No. 04-19644-01 authorizing use of Department of Energy (DOE) WESF cesium-137 capsules in your irradiators. We have also reviewed the additional information provided in your letter dated November 8, 1984. As we have discussed on the telephone on many occasions, our primary concern in evaluating your application is making a determination that the capsules will perform satisfactorily under actual industrial "wet storage/dry use" conditions. For this purpose, DOE has agreed to continue a testing program which will include destructive examination of WESF capsules.

As you stated in your November 8 letter, you expected DOE to send us a letter discussing their lease arrangements and testing program, which would assist us in reviewing your application. We have not received any letter from DOE. However, we have discussed the matter with them and obtained some information. Our understanding of their lease and testing requirements is still under review by DOE management.

In the meantime, we are proceeding with review of your application. Please provide additional information as outlined below:

1. DOE Testing Program

   Please provide the following commitments with respect to capsule testing:

   a. RSI will not accept any capsules from DOE until a lease or other written agreement has been executed which provides for a capsule testing program.

8504240175 850408
NMSS LIC30
04-19644-01 PDR

OFFICE ▶
SURNAME ▶
DATE ▶

OFFICIAL RECORD COPY

b. RSI will provide up to one capsule per year from each demonstration facility to DOE on request for destructive testing.

c. Any test results provided by DOE to RSI will be provided to NRC on request, and

d. If DOE determines that the capsules exhibit unacceptable deterioration and recalls them, RSI will return the capsules to DOE on request. (Evidence of corrosion of 25% of the thickness of the inner capsule may result in a recall).

2. Temperature monitoring

We have reviewed your submittal dated November 8, 1984, and we still believe that it is important to collect temperature data for use in evaluation of test results. Please commit to install a system for continously monitoring and recording temperature and to provide the results to DOE and NRC. The system should measure capsule temperature at the location estimated to reach maximum temperature. Describe how and where the system will be installed and operated. The best location for the temperature sensor would appear to be in a source holder as close as possible to the surface of a source capsule near the center of the source rack.

3. Illinois facility

Your application indicates that your Ohio facility will be the demonstration facility. Therefore, please confirm that you will not accept WESF capsules at your Illinois facility unless (1) DOE has agreed in writing to test capsules from that facility and you have installed a temperature monitor, OR (2) DOE has removed a capsule from the Ohio facility after one year and confirmed that the capsule has performed as expected.

4. Please clarify your exact mailing address. The building number on your most recent letter does not match our records.

5. It is our understanding that you are withdrawing your request for Neutron Products sources.

We will complete review of your application upon receipt of the above information. Please reply in duplicate and reference control No. 18824.

DISTRIBUTION
VLMiller
JAyer
BCarrico
DNussbaumer
SBaggett
JGlenn, RI
JPotter, RII
BMallett, RIII
JEverett, RIV
RMontgomery, RV
NMSS r/f
FCML r/f
FC Central File

Sincerely,

Original Signed By
John W. N. Hickey

John W. N. Hickey, Section Leader
Industrial Section
Material Licensing Branch

OFFICE	FCML						
SURNAME			JWNHickey/pj				
DATE			04/24/85				

NRC FORM 318 (10 80) NRCM 0240

OFFICIAL RECORD COPY

RADIATION
STERILIZERS
INCORPORATED

FEDERAL EXPRESS

April 4, 1985

Mr. John Hickey
U.S.N.R.C.
Willste Building
7915 Eastern Avenue
Silver Spring, MD 20910

Dear John:

As a condition of the NRC amending our license 04-19644-01 to use cesium sources, Radiation Sterilizers, Incorporated (RSI) agrees to the following:

1. RSI will not take possession of any cesium capsules until it has properly executed a lease agreement with the Department of Energy (DOE). This agreement will incorporate the testing procedures agreed upon by the NRC and DOE for evaluating the WESF capsules to be periodically removed from the designated RSI demonstration facility/facilities.

2. After NRC approval, and prior to shipment of any cesium, RSI will designate to the NRC in writing which facility or facilities will be monitored as demonstration plants. RSI will petition DOE to consider monitoring two or more of its plants as demonstration units based upon NRC's current position of requiring 12 months experience with the demonstration facility. As you know, RSI would like to load at least two facilities within a 3 - 6 month period. The outcome of these discussions will define the demonstration facility or facilities. In any event, additional use of cesium in a non-demonstration plant will not be implemented until after the first test capsule has been evaluated from the first demonstration facility, or unless approval from the NRC is obtained.

65

3. In any RSI demonstration plant, the temperature of the capsules will be monitored by a thermocouple attached to the protective cage around the source rack. The location, frequency of measurement, and acceptable temperature readings will be mutually agreed upon by RSI and the NRC.

8504240167 850408
NMSS LIC30
04-19644-01 PDR

Radiation Sterilizers, Inc., 3000 Sand Hill Road, Bldg. #4-245, Menlo Park, CA 94025 (415) 854-2800

Since both RSI plants in Illinois and Ohio are covered by the same NRC license, approval of the use of cesium is requested at this time for both subject to the conditions set forth in the preceding paragraphs.

I am appreciative of your cooperation and efforts to bring this project to a rapid and agreeable conclusions.

Sincerely,

Allan Chin

Allan Chin
President

NRC Form 374
(2-63)

U.S. NUCLEAR REGULATORY COMMISSION

Amendment No. 04

MATERIALS LICENSE

Pursuant to the Atomic Energy Act of 1954, as amended, the Energy Reorganization Act of 1974 (Public Law 93-438), and Title 10, Code of Federal Regulations, Chapter I, Parts 30, 31, 32, 33, 34, 35, 40 and 70, and in reliance on statements and representations heretofore made by the licensee, a license is hereby issued authorizing the licensee to receive, acquire, possess, and transfer byproduct, source, and special nuclear material designated below; to use such material for the purpose(s) and at the place(s) designated below; to deliver or transfer such material to persons authorized to receive it in accordance with the regulations of the applicable Part(s). This license shall be deemed to contain the conditions specified in Section 183 of the Atomic Energy Act of 1954, as amended, and is subject to all applicable rules, regulations and orders of the Nuclear Regulatory Commission now or hereafter in effect and to any conditions specified below.

Licensee	
1. Radiation Sterilizers, Inc. 3000 Sand Hill Road, 4-245 2. Menlo Park, California 94025	In accordance with letter dated April 3, 1984 3. License number 04-19644-01 is amended in its entirety to read as follows:
	4. Expiration date June 30, 1993
	5. Docket or Reference No. 030-19025

6. Byproduct, source, and/or special nuclear material	7. Chemical and/or physical form	8. Maximum amount that licensee may possess at any one time under this license
A. Cobalt 60	A. Sealed sources (AECL Model C-188)	A. 5,000,000 curies. Each source not to exceed 15,000 curies
B. Cesium 137	B. Sealed sources (DOE MDSF)	B. 30,000,000 curies. Each source not to exceed 150,000 curies
C. Cobalt 60	C. Sealed sources (AECL Model C-188)	C. 5,000,000 curies. Each source not to exceed 15,000 curies
D. Cesium 137	D. Sealed sources (DOE MDSF)	D. 30,000,000 curies. Each source not to exceed 150,000 curies

9. Authorized use

A. through D. Irradiation of materials, other than explosives or highly flammable products.

CONDITIONS

10. Licensed material under 6.A. and 6.B. shall only be used at 711 E. Cooper Court, Schaumburg, Illinois. Licensed material under 6.C. and 6.D. shall only be used at 305 Enterprise Drive, Westerville, Ohio.

11. The licensee shall comply with the provisions of Title 10, Chapter 1, Code of Federal Regulations, Part 19, "Notices, Instructions and Reports to Workers; Inspections" and Part 20, "Standards for Protection Against Radiation."

IE60
Send Copy to Region

8504240157 850408
NMSS LIC30
04-19644-01 PDR

License number: 04-19644-01

Docket or Reference number: 030-19025

Amendment No. 04

MATERIALS LICENSE
SUPPLEMENTARY SHEET

CONDITIONS

12. A. Licensed material under 6.A. and 6.B. shall be used by, or under the supervision and in the physical presence of, Allan Chin, Bruce C. Meyer, Thomas W. Hurley, Thomas J. Mates or individuals trained according to application dated January 21, 1981; and letters dated April 18, 1983, and July 19, 1983 and designated by Allan Chin, Corporate Radiation Safety Officer. Licensed material shall be used in accordance with Condition 15. of this license only under the supervision and in the physical presence of, Allan Chin, Bruce C. Meyer, Thomas W. Hurley or Thomas J. Mates.

B. Licensed material under 6.C. and 6.D. shall be used by, or under the supervision and in the physical presence of, Allan Chin, Bruce C. Meyer, Barry Fairand, Bob Ramsey or individuals trained according to application dated August 30, 1983; and letters dated October 28, 1983, November 9, 1983, and November 28, 1983 and designated by Allan Chin, Corporate Radiation Safety Officer. Licensed material shall be used in accordance with Condition 15. of this license only under the supervision and in the physical presence of, Allan Chin, Bruce C. Meyer, Thomas W. Hurley, Bob Ramsey, or Barry Fairand.

13. A. Each sealed source containing licensed material shall be tested for leakage and/or contamination at intervals not to exceed six months. In the absence of a certificate from a transferor indicating that a test has been made within six months prior to the transfer, a sealed source received from another person shall not be put into use until tested.

B. The test shall be capable of detecting the presence of 0.05 microcurie of contamination on the test sample. The test samples shall be taken from appropriate accessible surfaces of the device in which the sealed source is permanently or semipermanently mounted or stored. Records of leak test results shall be kept in units of microcuries and maintained for inspection by the Commission.

C. If the test reveals the presence of 0.05 microcurie or more of removable contamination, the licensee shall immediately withdraw the sealed source from use and shall cause it to be decontaminated and repaired or to be disposed of in accordance with Commission regulations. A report shall be filed within 5 days of the test with U. S. Nuclear Regulatory Commission, Region III, 799 Roosevelt Road, Glen Ellyn, Illinois 60137, describing the equipment involved, the test results, and the corrective action taken.

D. The licensee is authorized to collect leak test samples in accordance with the procedures described in the licensee's application dated January 21, 1981 for analysis by Halgeson Nuclear. Alternatively, leak test samples may be collected and/or analyzed by other persons specifically authorized by the Commission or an Agreement State to perform such services.

MATERIALS LICENSE
SUPPLEMENTARY SHEET

License number: 04-19644-01

Docket or Reference number: 030-19025

Amendment No. 04

CONDITIONS

14. Written instructions contained in the applications dated January 21, 1981 and August 30, 1983, and letters dated November 9, 1983 and November 8, 1984 shall be followed and a copy of these instructions shall be made available to each individual using or having responsibility for use of licensed material. Any changes in these instructions shall have the prior approval of the Material Licensing Branch, Division of Fuel Cycle and Material Safety, U. S. Nuclear Regulatory Commission, Washington, D. C. 20555.

15. This license does not authorize repairs or alterations of the irradiator or facility involving removal of shielding or access to the licensed material except as provided otherwise by specific condition of this license. Removal, replacement and disposal of sealed sources containing licensed material shall be performed only by the licensee or other persons specifically authorized by the Commission or an Agreement State to perform such services. The licensee is authorized to install the sealed sources in accordance with the procedures described in Section 8 of the licensee's application dated January 21, 1981; and letter dated November 8, 1984, with a minimum of two authorized users.

16. After installation of sealed sources and prior to initiation of the irradiation program, a radiation survey shall be conducted to determine the maximum radiation levels in each area adjoining the irradiation room. A detailed report of the results of the surveys shall be sent to the Material Licensing Branch, Division of Fuel Cycle and Material Safety, U. S. Nuclear Regulatory Commission, Washington, D. C. 20555, not later than thirty (30) days following installation of the source. A copy of such report shall also be sent to the U. S. Nuclear Regulatory Commission, Region III, 799 Roosevelt Road, Glen Ellyn, Illinois 60137.

17. Licensed material shall not be used in or on human beings or in products distributed to the public.

18. Irradiation of foods and the distribution of foods for human consumption shall be in accordance with the rules and regulations of the Food and Drug Administration, U. S. Department of Health and Human Services.

MATERIALS LICENSE
SUPPLEMENTARY SHEET

License number: 04-19644-01
Docket or Reference number: 030-19025
Amendment No. 04

CONDITIONS

19. The licensee shall not use any cesium-137 sources until a temperature monitoring system is installed in each facility using cesium-137. The temperature sensor shall be installed in the source racks as close as possible to the surface of the capsule estimated to reach the highest temperature.

20. Except as specifically provided otherwise by this license, the licensee shall possess and use licensed material described in Items 6, 7, and 8 of this license in accordance with statements, representations, and procedures contained in application dated January 21, 1981; letter dated June 4, 1981; letters dated February 4, 1983, April 18, 1983, May 12, 1983 and July 19, 1983; application dated August 30, 1983; and letters dated October 28, 1983, November 9, 1983, November 28, 1983, April 2, 1984, April 3, 1984, November 8, 1984, and April 4, 1985. The Nuclear Regulatory Commission's regulations shall govern the licensee's statements in applications or letters, unless the statements are more restrictive than the regulations.

FOR THE U.S. NUCLEAR REGULATORY COMMISSION

Date APR 0 8 1985

By John W. N. Hickey
Material Licensing Branch
Division of Fuel Cycle and
Material Safety
Washington, D. C. 20555

GN 4/5/85

RADIATION STERILIZERS INCORPORATED

July 22, 1985

FEDERAL EXPRESS

Mr. John Hickey
U.S. N.R.C.
Willste Building
7915 Eastern Avenue
Silver Springs, MD 20910

Dear John:

We have finally progressed to the point where the cesium shipments can commence. The following tasks have been completed by RSI:

1. Executed leases with DOE for a total of 21 MCi cesium.

2. Completed fabrication and registration of nine (9) Model 1500 series shipping containers. These casks are in Hanford awaiting loading and shipping.

3. Final approval obtained from Rockwell on RSI five (5) capsule shipping holder, based upon results of thermal tests.

4. Trucking contracts signed with A.J. Metler to transport capsules.

5. Both Westerville, OH and Decatur, GA plants have been modified to accept cesium capsules.

The Westerville facility, which is the designated wet storage demonstration facility, will be loaded with approximately 9 MCi of cesium commencing on or about August 1, 1985.

Radiation Sterilizers Inc. 2000 Sand Hill Road Bldg. [illegible] Menlo Park, CA 94025 (415) [illegible]

The temperature of the capsules will be monitored with thermo couples on the source cage (stationary) and on a dummy source loaded into the source rack sandwiched between live sources. After enough data has been obtained to establish a control reference temperature at the cage thermo-couple the source thermo couple will be removed.

A second temperature monitoring plan will also be evaluated for potential long term measurement. This system will use Hermet Markal HM Series temperature indicator labels, which will cover the temperature range of concern. These sensors will be enclosed within a water tight dummy capsule which will be loaded into the source rack with the WESF capsules.

As we discussed earlier, both RSI and DOE desire to move the 21 MCi of cesium in a single continuous program. RSI would prefer to split this amount between two of its facilities for maximum utilization of the isotope.

In order to accomplish this, I am requesting that condition 3 of your April 4, 1985 letter be modified to permit the use of cesium in a second facility immediately after the Westerville facility is loaded. The conditions of use in the second facility will still be governed by the results of testing of capsules at the designated demonstration plant in Westerville. It is anticipated that the shipment of the 9 MCi into Westerville will take 2-3 months to accomplish. <u>We will agree to remove the cesium from all of our plants based upon any adverse result from the Westerville capsule.</u>

Any interruption in the shipping schedule, will result in considerable pertubations in the DOE Hanford operations and potentially large additional financial costs to RSI.

Our optimal choice is to load 12 MCI into the Decatur facility after Westerville, and we would like to have a favorable response to our request before we submit an amendment to the state of Georgia. Your rapid response to this request is urgently sought in order to provide the state of Georgia with adequate time to respond. I am sure that they will contact your

office for confirmation.

I will call you next Monday to discuss this matter with you.

Thank you for your cooperation.

Sincerley,

Allan Chin

Allan Chin
President

AC/tk
Enclosure

73

Al — A set of these will do the trick

Barry

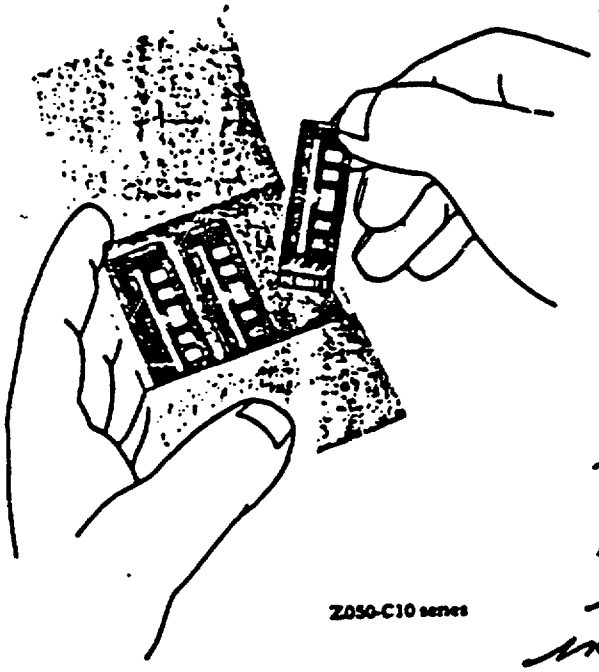

Z050-C10 series

Hermet Markal HM Series Temperature Indicator Labels

If Sal can make or use an aluminum capsule with a screw top & "O" ring seal, we could tape the indicators to the inside wall & drop the capsule into the perpe racks adjacent to the cesium capsules.

Z050-C10 through Z050-C28 **TEMPERATURE INDICATOR LABELS, Hermet®, Markal HM series**

For measuring, monitoring and documenting temperatures in Fahrenheit or Celsius degrees. Accuracy ±1%. Of plastic-coated paper, approximately 16 × 48 mm, with self-adhesive backing. Each label has five temperature-indicating panels marked in °F and °C. Panel color changes irreversibly from white to black when marked temperature is reached. Resists solvents, grease, oil, steam and water. Color will not change through aging.

Product No.	Temperature panels				
Z050-C10	105 40	110 43	115 46	120 49	130°F 54°C
Z050-C12	120 40	140 60	150 65	160 71	180°F 82°C
Z050-C14	105 40	130 54	150 65	170 77	200°F 93°C
Z050-C16	140 60	150 65	160 71	170 77	180°F 82°C
Z050-C18	180 82	200 93	210 99	220 104	240°F 116°C
Z050-C20	200 93	230 110	250 121	270 132	300°F 149°C
Z050-C22	270 132	280 143	300 149	310 154	330°F 166°C
Z050-C24	290 143	300 149	310 154	320 160	330°F 166°C
Z050-C26	300 149	330 166	350 177	370 188	400°F 204°C
Z050-C28	400 204	425 216	450 232	480 249	500°F 260°C

Also available with single temperature panel marked in °F and °C, on special order. Information furnished on request.

Z050-C10	LABEL, 130°F/54°C. Pkg of 12	19.20
Z050-C12	LABEL, 180°F/82°C. Pkg of 12	19.20
Z050-C14	LABEL, 200°F/93°C. Pkg of 12	19.20
Z050-C16	LABEL, 180°F/82°C. Pkg of 12	19.20
Z050-C18	LABEL, 240°F/116°C. Pkg of 12	19.20
Z050-C20	LABEL, 300°F/149°C. Pkg of 12	19.20
Z050-C22	LABEL, 330°F/166°C. Pkg of 12	19.20
Z050-C24	LABEL, 330°F/166°C. Pkg of 12	19.20
Z050-C26	LABEL, 400°F/204°C. Pkg of 12	19.20
Z050-C28	LABEL, 500°F/260°C. Pkg of 12	19.20

Z050-C35 TEMPERATURE INDICATOR LABEL ASSORTMENT, Hermet®, Markal HM-LO

Consists of three each Z050-C10 and C16 Labels, three labels having temperature panels 190, 200, 210, 220, 230°F and 88, 93, 99, 104, 110°C and three having temperature panels 240, 250, 260, 270, 280°F and 116, 121, 127, 132, 138°C.

Z050-C35 LABELS, HM-LO. Set of 12 ..... 19.20

Z050-C37 TEMPERATURE INDICATOR LABEL ASSORTMENT, Hermet®, Markal HM-HI

Consists of three Z050-C24 Labels; three labels having temperature panels 340, 350, 360, 370, 380°F and 171, 177, 182, 188, 193°C; three with temperature panels 390, 400, 410, 420, 435°F and 199, 204, 210, 216, 224°C; and three having panels 450, 465, 480, 490, 500°F and 232, 241, 249, 254, 260°C.

Z050-C37 LABELS, HM-HI. Set of 12 ..... 19.20

Barry — get one of these two sets

UNITED STATES
NUCLEAR REGULATORY COMMISSION
WASHINGTON, D. C. 20555

Sreniawski

JUL 25 1985

FCML:JH
030-19025

Radiation Sterilizers, Inc.
ATTN: Dr. Allan Chin, President
3000 Sand Hill Road, Bldg. 4-245
Menlo Park, California 94025

Dear Dr. Chin:

This is a reply to your letter dated July 22, 1985, regarding use of cesium-137 WESF capsules in your irradiators under License No. 04-19644-01.

Please be advised that you are required to adhere to all commitments, statements, and representations in your license applications and associated correspondence, unless we specify otherwise through a license amendment. If you request a license amendment, it should submitted with the proper fee to our Region III Office. They will coordinate with other NRC offices as appropriate.

We have the following specific comments regarding your letter dated July 22, 1985:

1. As we requested in our letter dated April 4, 1985, you still need to submit a detailed description of your continuous temperature monitoring system, including sketches. We believe that is important to obtain continuous temperature data on the capsules. Please note that the thermocouple system cannot be removed unless this is authorized by a license amendment.

2. As you stated in your letter dated April 4, 1985, you will not use cesium in a "non-demonstration plant" until after the first test capsule from your Ohio facility is evaluated by the Department of Energy (DOE) (after one year), unless the Nuclear Regulatory Commission approves. As we explained in our letter dated April 4, 1985 and in telephone conversations, test data should be obtained on the performance of the WESF capsule in production irradiators before we authorize routine use. We do not believe that it is appropriate to authorize use of the WESF capsules in your Illinois facility prior to obtaining satisfactory DOE test results from the Ohio facility.

75

If you have additional questions regarding this matter, feel free to call me directly at (301) 427-4238.

Sincerely,

John W. N. Hickey

John W. N. Hickey, Section Leader
Industrial, Medical, and Academic
Sections
Material Licensing Branch
Division of Fuel Cycle and
Material Safety

RADIATION STERILIZERS INCORPORATED

RECEIVED
'85 AUG 29 AM 9:24
U.S. N.R.C.
INC. FEE MGMT. BRANCH

July 31, 1985

FEDERAL EXPRESS

Mr. John W.N. Hickey, Section Leader
Industrial, Medical and Academic Sections
Material Licensing Branch
Division of Fuel Cycle and Material Safety
U.S. N.R.C.
Willste Building
7915 Eastern Avenue
Silver Springs, MD 20910

Dear John:

Per your July 25, 1985 request, the following additional information is provided regarding the temperature monitoring of the WESF capsules in the Westerville, OH plant.

Chromel-alumel thermocouples will be used to monitor the temperature using an Ouega digital potentiometer read out. The thermocouple wire will be insulated with a glass-resin cover. Ceramic standoffs will be used wherever the wire might contact the sources.

A dummy source, simulating a WESF capsule, will be used. The dummy will be of the same outside diameter, aluminum, and have 3/4" wall. A hole will be drilled into the mid-height of the dummy, and the chromel-alumel bead peened into the wall. The dummy will be sealed top and bottom.

The dummy will be loaded centrally into the source rack, and be surrounded by WESF capsules. The dummy will be positioned such that the thermocouple will be in closed proximity to the adjacent WESF capsule. The temperature should simulate the surface temperature of the WESF capsules within reasonable limits. It should be better than monitoring the source rack as we originally discussed.

The reference thermocouple will be located on the source cage as close as possible to the dummy thermocouple. The leads from the dummy will be routed vertically along the source rack. They will then be

RECE
AUG
REGI

8512100172 850828
REG3 LIC30
04-19644-01 PDR

19/2-7 Aug-6 AUG 5 1

Radiation Sterilizers, Inc., 3000 Sand Hill Road, Bldg. #4-245, Menlo Park, CA 94025 (415) 854-2800

routed vertically to a pulley at the ceiling, and thence to the outside cell wall to connect to a terminal strip. Additional wires will attach to the terminal strip and be routed through wall penetrations to the readout potentiometer located outside of the cell.

As you know, I have always questioned the need to show that the surface temperature of the WESF capsule stays below 300°C in my application. Every thermal analysis and actual temperature measurement on the WESF capsules has shown that the surface temperature will not exceed 175°C. Enclosed is RSI's analysis which shows an expected surface temperature of 135°C.

The most recent thermal test run at PNL shows maximum surface temperatures of about 160°C in stagnant air. In our facilities the temperatures should be significantly lower because of our higher ventilation rates.

Of more concern to me are the potential safety hazards involved in having loose, moving wires strung around the inside of the radiation cell. I am very concerned that they could get entangled with the conveyor system. and potentially cause a source jam. If this occurs, I expect the NRC to accept the responsibility.

As stated in my previous letter, I would like to measure the temperature after the first loading, and then remove it once the corresponding cage temperature has been established.

Thermal models and analyses have indicated that only immediately adjacent sources can influence a specific source. Therefore the capsule temperature is not affected by the total number of sources. The initial temperature reading should also be be worst case, since decay will always make it lower.

Based upon the above concerns, I am requesting that you permit us to remove the thermocouples after our first test. My major reason for this request is radiation safety.

I would appreciate your rapid response to this request since we are planning to start loading WESF capsules into the Westerville plant on August 5, 1985.

Sincerely,

Allan Chin

Allan Chin
President

AC/tk

cc: Dr. Barry Fairand
D.G. Wiederman, Chief

79

SURFACE TEMPERATURE OF

CESIUM AND COBALT CAPSULES

A theoretical model is used to estimate the temperature distribution within a cesium capsule and predict the temperature at the surface of a cobalt capsule. Studies performed at Battell Northwest and Sandia provide information on temperature within a cesium capsule. Comparison of theoretical results with the available data base for cesium provides tie down points to determine the efficacy of the model and estimate calculational uncertainties.

CESIUM CHLORIDE CAPSULE

The power output for Cs^{137} is 3.35×10^{-3} W/ci from gamma emission and 1.0×10^{-3} W/ci from beta rays. Essentially all the beta rays are absorbed and 35% to 40% of the gammas are absorbed within the capsule. Therefore, the total watts per curie generated within the capsule range from 2.17×10^{-3} W/ci to 2.34×10^{-3} W/ci. Given an average curie loading per capsule of 50,000 ci, the power generated within the capsule, which appears as a heat load, ranges from 108.5 W to 117 W. Based on the above thermal loading and knowledge of the capsule geometry, the equilibrium temperature distribution for a capsule immersed in stagnant air can be determined via heat transfer calculations. A cross sectional view of the cesium capsule is shown in Figure 1. The isotope loaded portion of the capsule has an overall length (ℓ) of 50.1 cm.

The steady state heat balance equation with an internal source is given by,

$$-k \nabla^2 T = Q(\ell) \qquad (1)$$

where k is thermal conductivity, ∇^2 the Laplacian operator and Q(r) the volumetric thermal source strength. For radial conduction in a cylindrical geometry Equation (1) becomes,

$$-k\left(\frac{d^2T}{d\ell^2} + \frac{1}{r}\frac{dT}{d\ell}\right) = Q(\ell) \qquad (2)$$

The general solution of this equation is

$$T(r) = -\frac{Q r^2}{4k} + C_1 \ln r + C_2 \qquad 0 \le r \le a_1 \tag{3}$$

Given the following boundary conditions,

$$\frac{dT}{dr} = 0,\ r=0 \ ; \ T = T_1 \ , \ r = a_1$$

the applicable solution for the configuration shown in Figure 1 is

$$T - T_1 = \frac{Q}{4k}\left(a_1^2 - r^2\right) \qquad 0 \le r \le a_1 \tag{4}$$

If T_o is the temperature along the centerline where r=0, then

$$T_o - T_1 = \frac{Q}{4k} a_1^2 \tag{5}$$

where k is the thermal conductivity of cesium chloride ($k \approx 1 \times 10^{-2}$ W/cm -°c). The volumetric heat source is found from the power output per capsule, i.e., 108.5 W to 117 W, and source volume $\pi a_3^2 l = 992.7\ cm^3$. Thus Q ranges from 0.109 W/cm^3 to 0.118 W/cm^3.

Using an average of these two numbers,

$$T_o - T_1 = 23.2\ °C.$$

Work performed at Sandia predicted that the maximum temperature in the cesium chloride stayed at least 150°C below the melt temperature of the salt. The melt temperature is dependent on impurity content, but has an average value of approximately 600 °C. Based on this value, the temperature T_1 at the outside surface of the isotope is

$$T_1 = 450\ °C - 23\ °C = 427\ °C.$$

The temperature drop across the stainless steel clad is found from the heat conduction equation,

$$q = -k_{ss}\, 2\pi r l \frac{dT}{dr} \tag{6}$$

SOURCE MATERIAL	FORM	LOADING	PERCENT OF THEORETICAL DENSITY BASED ON TOTAL VOID SPACE OF CAPSULE
CESIUM CHLORIDE	MELT-CAST	70 g/cc	98

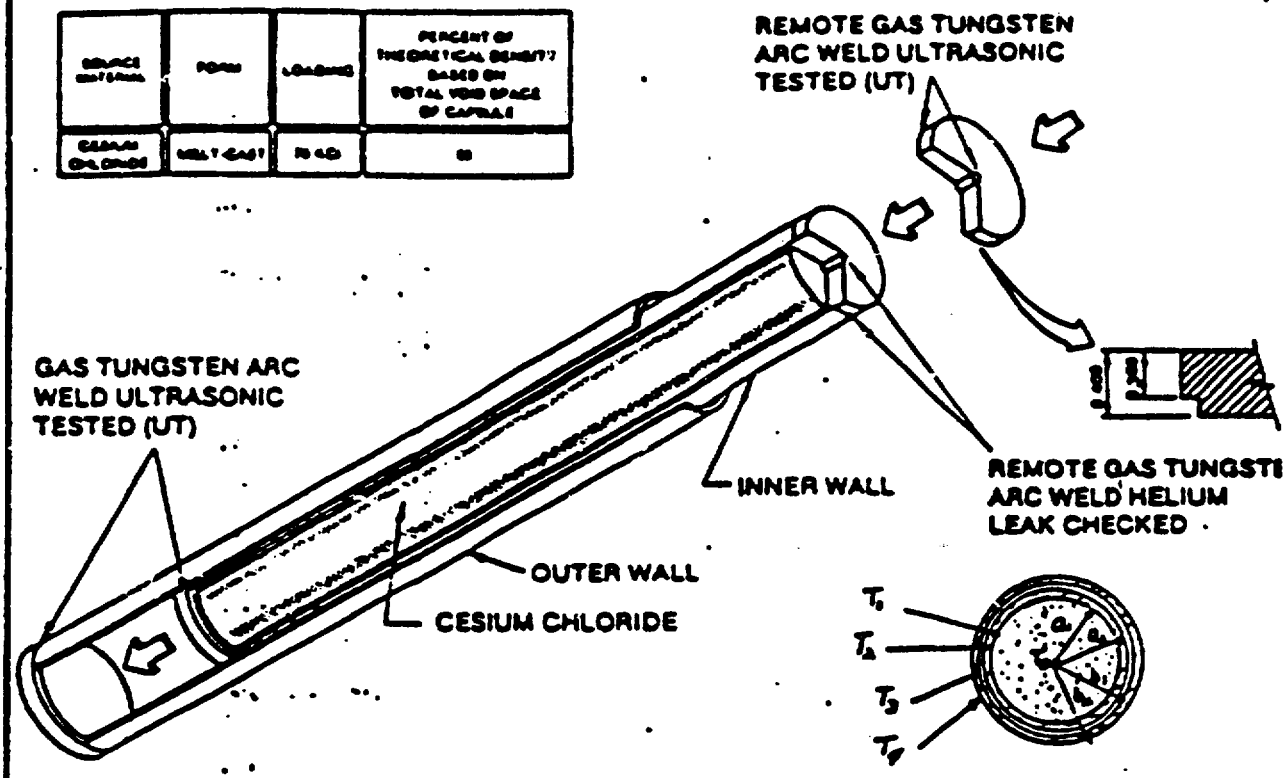

SOURCE MATERIAL	CAPSULE									
	INNER					OUTER				
	MATERIAL	WALL THICKNESS	OUTSIDE DIAMETER	TOTAL LENGTH	TOTAL CAP THICKNESS	MATERIAL	WALL THICKNESS	OUTSIDE DIAMETER	TOTAL LENGTH	TOTAL CAP THICKNESS
CESIUM CHLORIDE	316L STAINLESS STEEL (UT)	0.120 (UT)	2.250	10.750	0.400	316L STAINLESS STEEL (UT)	0.120 (UT)	2.250	10.750	0.400

NOTE: ALL DIMENSIONS ARE in INCHES

FIGURE 1. CESIUM-137 WESF CAPSULE

Integration of this equation yields

$$T_1 - T_2 = \frac{q}{2\pi \ell k_{ss}} \ln\left(a_2/a_1\right) \qquad (7)$$

where $k_{ss} \simeq 0.2$ W/cm - °C.

Based on average values of q = 113 W

$$T_1 - T_2 = 0.2\ ^\circ C.$$

In the spirit of the calculations, the temperature drop across the clad can be neglected. This also is true for the temperature drop across the outer capsule. Therefore $T_1 \simeq T_2$ and $T_3 \simeq T_4$.

Heat transfer across the gap between the two stainless steel capsules is assumed to occur principally via a radiative process. The net rate of emission of radiant energy per unit area between a surface at temperature T_2 and one at T_3 is

$$R = \varepsilon \sigma \left(T_2^4 - T_3^4\right) \qquad (8)$$

where ε is the emissivity of the surface and $\sigma = 5.67 \times 10^{-12}$ W/cm^2 - °C.

Measurements performed at Sandia have bracketed the outer surface temperature of the cesium chloride capsules between 80 °C and 130 °C. Employing an average value of 105 °C for T_3, a value of 427 °C for T_2 and an emissivity of 0.6 to 0.8 for the stainless steel wall*, the value of R ranges from 0.11W/cm^2 to 0.15 W/cm^2. Based on an average power of 113 W/capsule and a surface area of 899 cm^2, the inner capsule of cesium chloride emits about 0.13 W/cm^2, which is in good agreement with the calculated range of values.

* Approximate range for unpolished stainless steel (some oxide formation) in the temperature range 20 °C to 700 °C. Validity of the above assumption is directly tied to the appropriateness of the selected range of emissivity values.

83

As noted earlier, the equilibrium surface temperature of a cesium chloride capsule immersed in stagnant air ranges from 80 °C up to 130 °C. Over this temperature range, heat transfer to the air reservoir is dominated by natural convection. The equation of convective heat transfer is

$$q = h \quad A(T_4 - T_A) \tag{9}$$

where

q = Power output of the source in watts

h = Convection coefficient

A = Surface area of the source

T_4 = Equilibrium surface temperature of the source

T_A = Ambient air temperature

An approximate expression for the coefficient of natural convection in air at atmospheric pressure is

$$h = 4.19 \times 10^{-4} \left[\frac{(T_4 - T_A)}{2 b_2} \right]^{1/4} \tag{10}$$

given in $W/cm^2 - °C$.

After substitution of this expression into Equation (9) with the known value of A, Equation (7) reduces to

$$q = 8.274 \ (T_4 - T_A)^{5/4} \tag{11}$$

where q is the power generated by cesium chloride given in watts. It is of interest to substitute the extreme values for q, i.e., 108.5 W to 117 W, into Equation (11) and compare the predicted values of T_4 with Sandia's measured range. For q = 108.5 W and $T_A \cong 24$ °C, T_4 = 144 °C and q = 117 W gives T_4 = 151 °C. These values agree within 20% of the maximum temperature recorded by Sandia, i.e., 130 °C. Therefore the preceding model can be applied with reasonable confidence to predict the equilibrium surface temperature of cobalt capsules.

COBALT CAPSULE SURFACE TEMPERATURE

The power output per curie for cobalt-60 is 14.9×10^{-3} W/ci from gamma emission and 6.56×10^{-3} W/ci from beta rays. Approximately 10% of the gammas are absorbed in the capsule and 100% of the beta rays. Therefore the power generation in the cobalt capsule is approximately 2.05×10^{-3} W/ci. Given, 10,000 curies per capsule, the total power generated is 20.5 Watts per capsule.

The outside dimensions of a cobalt capsule are 0.953 cm diameter and 45.1 cm length. Substitution of pertinent values into Equations (9) and (10) gives

$$q = 0.057\ (T_4 - T_A)^{5/4}. \qquad (12)$$

Since q = 20.5 Watts,

$$(T_4 - T_A) = 111\ ^\circ C, \text{ or for}$$

$$T_A = 24\ ^\circ C, \qquad T_4 = 135\ ^\circ C.$$

The estimated uncertainty in this value is plus or minus 20%, thus giving a temperature range of 108 °C to 162 °C. It is of interest to note that the surface temperature of the cobalt capsule is approximately equal to the cesium chloride capsule surface temperature.

RADIATION STERILIZERS INCORPORATED

FEDERAL EXPRESS

August 19, 1985

Mr. William Axelson
USNRC
799 Roosevelt Road
Glenn Ellyn, IL 60137

Reference: License No. 04-19644-01

Dear Mr. Axelson:

This is an extremely urgent request for amendment to the referenced license. The following reference material is enclosed:

1. 06/26/84 letter from Nathan Bassin to RSI
2. 07/23/84 letter from RSI to Bassin
3. 07/25/84 letter from John Jicha to Richard Cunningham
4. 09/14/84 memo from James Ayer to William Adam
5. 04/04/85 letter from John Hickey to RSI
6. 04/04/85 letter from RSI to John Hickey
7. 04/08/85 license including amendment 4
8. 07/22/85 letter from RSI to John Hickey
9. 07/25/85 letter from John Hickey to RSI
10. 07/31/85 letter from RSI to John Hickey

The specific amendment requests are as follows, referring to John Hickey's July 25, 1985 letter to RSI:

A. That RSI be permitted to remove the thermocouple from the source rack based upon actual measurements which show that the temperature does not exceed 130°C. This is considerably lower than the allowable 300°C limit, and it is inconceivable to develop any scenario that could make this temperature go any higher, short of applying an external flame to it. We consider these loose wires to represent a safety hazard.

B. That RSI be permitted to load WESF capsules into its other facilities without having to await the results of the tests on the first capsule to be removed from the Westerville facility. This request is made based on the fact that there is no technical basis for denying this request. The opinion of Battelle experts at PNL, and all available data on the WESF capsules, supports this request.

A discussion of each of the referenced letters follows, with arguments in support of this request:

1. <u>June 26, 1984 letter from Nathan Bassin to RSI</u>

This letter expressed concern over high temperature (450°C) corrosion rates on the inner capsule which would jeopardize the source integrity. The basis for concern was PNL-4847.

RECEIVED
AUG 20 1985
REGION III

Radiation Sterilizers, Inc., 3000 Sand Hill Road, Bldg. #4-245, Menlo Park, CA 94025 (415) 854-2800

2. <u>July 23, 1984 letter from RSI to Nathan Bassin</u>

This transmission included letters from PNL which stated that the results reported in PNL-4847 were possibly erroneous. More significantly however, at the expected operating interface temperatures of 200°C, the corrosion rate was deemed to be insignificant. Also included was a letter from a major stainless steel supplier which stated a million thermal cycles between 150°C and 30°C would not endanger the WESF capsules cladding.

This letter basically stated that, under the expected operating conditions, internal corrosion and thermal fatigue will not be a problem.

This letter also suggested a monitoring program by removing a WESF capsule periodically and destructively testing it for potential failure modes.

3. <u>July 25, 1984 letter from John Jicha to Richard Cunningham</u>

This letter outlines DOE's willingness to perform destructive monitoring tests on WESF capsules to detect potential failure modes.

The conditions stated, for operation and licensing, were:

a. operating surface temperature limit <= 300°C
b. thermal cycle limit: 12000 cycles air to water 200°C maximum delta T

RSI has agreed that we will meet these requirements.

The first facility loaded was to be used as the demonstration for all similar facilities. I believe it was DOE's and certainly RSI's belief that additional facilities of similar design or type could be loaded and governed by the results of tests from the Westerville facility without any time interval between facility loadings.

4. <u>September 14, 1984 memo from James Ayer to William Adam</u>

This letter states that the WESF capsules have no chemical properties sufficient to meet the ANSI standard for sealed radioactive sources for use in Category III and IV gamma irradiators.

It also states that, at interface temperatures of 150°C, insignificant corrosion rates resulted after 6 years.

Proposed safe operating limits of less than 300°C surface temperature and 12000 air-to-water cycles.

RSI can and will operate under these conditions as well as the other conditions included in the memo.

This memo also stated that the first user of WESF capsules in a category IV irradiator would be designated as the "demonstration"

facility for a particular process. The inference in this letter is that other category IV facilities could be operated and controlled by the "demonstration" facility. There was no mention of the 12-month delay period which subsequently appeared as a license condition.

5. April 4, 1985 letter from John Hickey to RSI

In spite of the July 25, 1984 letter from John Jicha to Richard Cunningham, the NRC stated that insufficient information was received from DOE, but discussions were underway to obtain it.

Item 1d of this letter indicates that up to 25% reduction in the inner capsule wall would be acceptable due to corrosion. At our planned operating conditions, this will not occur for hundreds or more years, based upon all available data.

This letter also established the following license restrictions:

a. The installation of a temperature monitoring system

b. that a second facility (Illinois) not be loaded with WESF capsules unless:

(1) DOE has agreed in writing to test capsules from that facility and you have installed a temperature monitor OR

(2) DOE has removed a capsule from the Ohio facility after one year and confirmed that the capsule has performed as expected.

This letter was the first notice of the 12-month delay period between loading the first and second facility. Requiring DOE to test each facility prior to 12 months negates the principle of a demonstration facility. It makes each of these facilities a demonstration facility and greatly magnifies the costs and inconvenience of using this material.

6. April 4, 1985 letter from RSI to John Hickey

Agreed to conditions as established by Hickey in his letter. RSI would petition DOE to monitor additional facilities as stated by NRC.

This letter stated that:

> "In any event, additional use of cesium in a non-demonstration plant will not be implemented until after the first test capsule has been evaluated from the first demonstration facility, or unless approval from NRC is obtained."

The last phrase was inserted pending future planned discussions with the NRC to eliminate this requirement.

7. April 8, 1985 license including amendment 4

This amendment permits the use of cesium contingent on the restrictions of items 19 and 20.

8. April 23, 1985 telecon A. Chin to John Hickey

This call was to initiate discussions regarding a removal of the 12-month delay requirement between the first and second facilities. Hickey's response was that I should wait until we were ready to load to discuss this further, and that at that time he would be "flexible".

9. July 22, 1985 letter from RSI to John Hickey

This letter was to notify Hickey that we were ready to ship cesium and outlined our temperature measurement plan and again requested that we be allowed to load a second facility immediately after the Westerville facility. This letter outlined some of the reasons for this request. These included large potential additional financial costs to RSI.

The AECL cobalt shortage appears to be more severe than previously imagined, and, if RSI is prevented from loading cesium into its other facilities, the company will face large financial losses which could endanger the existence of the company. Furthermore, many of its customers, who service the health care industry, may also suffer similar hardships.

This letter stated:

> "We will agree to remove the cesium from all of our plants based upon any adverse result from the Westerville capsule."

This statement follows from the definition of a "demonstration" plant.

10. July 25, 1985 letter from Hickey to RSI

This letter denied our requests and re-stated the positions outlined in the April 4, 1985 letter. All changes were now to be made by formal request through the Region III office instead of directly to the Washington headquarters. This request will assuredly have to be forwarded to Washington.

This letter also requested additional information on our temperature test program and specifically stated that the thermocouples were not to be removed without NRC approval.

11. July 31, 1985 letter from RSI to John Hickey

Additional temperature testing information was supplied. Our concern over the potential safety hazards presented by the loose thermocouple leads were stated. Information was also presented which showed that the temperature of the capsules could not exceed 170°C let alone 300°C. This information, plus our safety concerns, have prompted this request to remove the loose thermocouple wires. These thermocouple wires are

still in place.

All temperature tests to date on our system show that the maximum surface temperature does not exceed 130°C. Any additional tests should not be expected to change this result, and, due to decay, it should decrease.

12. PNL-5517

This recently issued report further substantiates that surface temperatures of WESF capsules will not exceed 170°C. After 3845 thermal cycles there was little, if any, indication of corrosion or failure.

This license amendment request is made based upon all available data, and expert opinion. I expect it to be approved unless reasonable technical and factual arguments can be stated for its denial.

As initially stated, this is an extremely urgent request, and I am asking that it be expedited as rapidly as possible.

Thank you for your cooperation. Please call me if I can provide any further information. If a personal appearance anywhere would be advantageous, let me know when and where.

Sincerely,

Allan Chin
President

AC:ck

Enclosures

SEP 3 1985

ORANDUM FOR: John Hickey, Section Leader
Industrial, Medical and Academic Sections
Material Licensing Branch

M: William J. Adam, Ph.D.
Senior Health Physicist/Licensing

: Use Of WESF Capsules At Radiation Sterilizers, Inc.

have reviewed the attached letter dated August 19, 1985 (with enclosures) and ve the following comments.

the request to remove the thermocouple (Item A.) is reasonable in view of e data presented by the licensee (notably letter dated July 16, 1984 from L. McElroy, Battelle to J.D. White, D.O.E.). The facility in question was sited by our inspector, James L. Lynch on August 5, 1985 during which time the stallation of the thermocouple was discussed. Mr. Lynch feels there is an tremely remote possibility that the wiring leading to the thermocouple could nder source travel. We ask that you evaluate the enclosed attachments and mment on whether your concerns outlined in your letters dated June 26, 1984 d April 4, 1985 have been adequately addressed. If not, we would appreciate ur reasons for requiring the licensee to maintain continuous temperature nitoring. With regard to Item B of the request, we feel that allowing only e "demonstration" plant until a WESF capsule can be evaluated by DOE is a udent precaution.

e Region III contact in this matter is W. Adam, FTS 388-5624.

William J. Adam, Ph.D.
Materials Licensing Section

III RIII RIII

OCT 01 1985

Radiation Sterilizers, Inc.
ATTN: Allan Chin, Ph.D.
President
3000 Sand Hill Road
Bldg. #4-245
Menlo Park, CA 94025

License No. 04-19644-01

Gentlemen:

This is to confirm our conversation of September 30, 1985, between yourself and Messrs. B. S. Mallett, J. L. Lynch and W. J. Adam of my staff concerning the placement of a thermocouple device for temperature monitoring in the vicinity of the source bundles at your Westerville Ohio facility. It is our understanding that:

1. To date, you have not experienced any difficulties with source travel as a result of installation of the thermocouple.

2. If you do experience any interference with source travel as a result of installation of the thermocouple, you will immediately shut down your facility and notify the NRC.

If your understanding of the above is contrary to ours, please notify this office immediately.

Sincerely,

W. L. Axelson, Chief,
Nuclear Materials Safety
and Safeguards Branch

bcc: J. Hickey, NMSS

RIII
WJA
Adam/jl
10/1/85

RIII
Lynch

RIII
WJA
Mallett
10/1

RIII
Axelson

Adam/cm Lynch Wiedeman
08/27/85

JAN 28 1986

Radiation Sterilizers, Inc.
ATTN: Allan Chin
President
3000 Sand Hill Road
Building 4-245
Melno Park, CA 94025

License No. 04-19644-01

Gentlemen:

This is in response to your letters dated July 31, 1985 and August 19, 1985 requesting permission to load WESF capsules into facilities other than your Westerville, Ohio plant and removal of the thermocouple monitoring device now being used at that plant. This letter is to inform you of the status of your request.

We believe we can proceed to evaluate your request to use WESF capsules at your Illinois facility pending the resolution of certain questions pertaining to the temperature monitoring device at your Ohio facility. Before Region III considers approval for loading WESF capsules at your Illinois facility, however, we will need the final report from Pacific Northwest Laboratories (PNL) and the Department of Energy (DOE) forwarding their evaluation of the suitability of your temperature monitoring system and their determination of how long the system should remain in place at your Ohio facility. We have only received information verbally from Dr. Tingy of PNL, indicating that he feels direct capsule temperature monitoring could be discontinued, and rack air temperature used as a basis to correlate capsule temperature.

As soon as we have received the final report form PNL/DOE, we will act on your request. Until such action is completed, all conditions regarding your temperature monitoring system remain in effect.

Regarding the site visit at your Westerville, Ohio facility on December 30-31, 1985 by Mr. William Axelson, we are enclosing the results of the gamma-ray spectometric analysis and chloride content of the pool water sample. Both results indicated adequate results.

If you have any questions or require clarification on any of the information stated above, you may contact us at (312) 790-5625.

Sincerely,

Original Signed By
William J. Adam, Ph.D.
Materials Licensing Section

Enclosure: Letter dtd 1/21/86

cc w/enclosure: J. Hickey, NMSS

Department of Energy
Washington, DC 20545

JAN 28 1986

Mr. John Hickey
Section Leader
Materials Licensing Branch
U.S. Nuclear Regulatory Commission
Washington, DC 20555

Dear Mr. Hickey:

The data taken since the Waste Encapsulation Storage Facility (WESF) capsules were placed in the Westerville, Ohio, irradiator in August 1985 has been analyzed. During this period, two thermocouples have been used to monitor the temperatures in the vicinity of the capsule rack. The first is a chromel-alumel couple placed on a copper cylinder fabricated to simulate the gamma heating in the WESF capsules and placed in contact with two WESF capsules near the center of the source plaque. The second is a similar thermocouple placed in a stationary position on the cage between the source and the product to be irradiated.

The temperature of the copper cylinder cycles from a temperature about the same as that of the water in the storage pool to a maximum temperature achieved at steady state when the source plaque is in the irradiation position in air. The following table lists the steady state temperatures of the copper cylinder and the temperature readings from the couple on the cage at representative times since the capsules were installed in the facility.

TABLE 1. Temperatures of the Copper Cylinder and Cage

Date	Steady State Cu Cylinder Temp., °C	Air Temp. Near Cage, °C	At °C
8/14/85	126	49	77
9/20/85	111	32	79
9/26/85	106	29	77
10/12/85	114	32	82
10/27/85	110	29	81
11/30/85	88	19	69
12/14/85	87	17	70
12/26/85	110	28	82

The data show that the temperature difference between the two couples is relatively constant. With the air temperature between 25°C and 50°C, the temperature difference between the two couples is 80°C +/-3°. With the cold outside air circulating over the capsules, the temperature

Department of Energy
Richland Operations Office
P.O. Box 550
Richland, Washington 99352

APR 02 1986

Roger K. Heusser, Acting Director
Waste and Research Development Division
HQ/DP-123

WESF CESIUM CAPSULE TEMPERATURE INFORMATION FOR THE NUCLEAR REGULATORY COMMISSION (NRC)

The Waste Encapsulation and Storage Facility (WESF) cesium capsule temperature information requested by W. C. Remini of your staff for the NRC is enclosed. This information describes the correlation between cesium capsule temperatures the surrounding ambient conditions found in commodity irradiation facilities h as the Radiation Sterilizers, Inc. (RSI) Westerville, Ohio Facility.

This information should be sufficient for the NRC to evaluate RSI's request for modification of the temperature monitoring requirements contained in their Ohio facility license. If additional information is needed or if you have any questions, please contact C. R. Delannoy of my staff.

for Jerry D. White, Director
Waste Management Division

WMD:GJB

Enclosure:
PNL internal letter

J. W. N. Hickey, NRC
J. E. Ayer, NRC

Battelle
Pacific Northwest Laboratories
P.O. Box 999
Richland, Washington U.S.A. 99352
Telephone (509)
Telex 15-2874 375-2419

March 31, 1986

Mr. James H. Jarrett, Manager
Nuclear Byproducts Program
Nuclear Fuel Cycle and Waste
Management Program Office
Pacific Northwest Laboratory
P. O. Box 999
Richland, WA 99352

Dear Mr. Jarrett:

SUBJECT: TEMPERATURE OF WESF CESIUM CAPSULES USED IN RADIATION STERILIZERS, INC., WESTERVILLE, OHIO, IRRADIATOR

REF: Letter, W. C. Remini to John Hickey, dated January 28, 1986

As we discussed, I am supplying the following information concerning the WESF capsule operating temperature in the subject irradiator. In the referenced letter, the relationship between the temperature of a cylinder placed between two WESF capsules and that of a thermocouple placed to measure the air at the cage of the irradiator was described. As you will recall, there was a rather constant 80 ±3°C temperature difference between the air temperature and the metal cylinder used to reflect the capsule temperature. On the basis of this constant difference, it was recommended that the irradiator operator be permitted to remove the thermocouple from the cylinder in the source rack but continue to monitor the temperature near the cage.

Since that time, we have continued to assess the relationship between the metallic cylinder temperature and that of the WESF capsules in the source rack. The metallic cylinder placed between two 55 kCi cesium-137 capsules has been estimated to absorb about 30 watts of gamma energy. We have estimated that an additional 15 watts may be sorbed by heat transfer (conduction and radiation) from the two adjacent WESF capsules. Thus, at steady state, up to 45 watts would be generated in this cylinder. Simple heat transfer calculations yield a surface temperature of about 105°C in 25°C air, consistent with the measured temperature in the Westerville irradiator. By contrast, a WESF capsule with 55 kCi of cesium-137 is expected to generate about 180 watts from the cesium decay plus another 30 watts from gamma heating by near-neighbor capsules (210 watts total).

As part of earlier thermal cycling tests (Tingey et al, 1985),* we measured the surface temperature of two well-instrumented capsules placed side by side. Each of these capsules generated about 180 watts internally plus 15 watts gamma heat from the adjacent capsule giving a total heat generation of 195 watts.

Battelle

The measured maximum surface temperature of these capsules was about 168°C in static, ambient air. Using this measured value and heat transfer models, we have calculated a maximum surface temperature of a capsule in an infinite array to be about 180°C. This calculation assumes thermal convection and radioactive heat loss only, whereas, the Westerville, Ohio, irradiator has forced air flow over the irradiation sources.

Although there remains some uncertainty in the estimate of the capsule temperatures, it is clear that it will be well below a temperature where the reaction between the salt and the inner capsule wall would be measurable except after very long periods of time (i.e., 30 years). Thus, our present knowledge of the temperatures of the capsules during use is considered sufficient to allow us to interpret the data generated from destructive examination of selected capsules from the Westerville facility.

This analysis, along with the measurements made to date and previous calculations and measurements, give sufficient knowledge of the capsule temperatures so that we have no further requirement for a temperature measurement on the capsules in the Westerville irradiator.

If you have further questions concerning this subject, please contact me at (509)375-2419.

Very truly yours,

Garth L. Tingey

Garth L. Tingey
Nuclear Fuels and Materials Section

GLT/tf

* Tingey, G. L., W. J. Gray, R. J. Shippell, and Y. B. Katayama. 1985. WESF Cesium Capsule Behavior at High Temperature or During Thermal Cycling. PNL-5517, Pacific Northwest Laboratory, Richland, Washington.

UNITED STATES
NUCLEAR REGULATORY COMMISSION
WASHINGTON, D.C. 20555

wfa
J Lewis
B Adam
B Mallett

APR 14 1986

MEMORANDUM FOR: William L. Axelson, Chief
Nuclear Materials Safety and Safeguards Branch, RIII

FROM: John W. N. Hickey, Section Leader
Industrial, Medical, and Academic Section
Material Licensing Branch
Division of Fuel Cycle and Material Safety

SUBJECT: TEMPERATURE DATA ON WESF CAPSULES

As a follow-up to your memorandum to Bill Adam dated January 15, 1986, we have reviewed the enclosed letters from the Department of Energy (DOE) regarding temperature monitoring data on the cesium-137 WESF Capsules installed at Radiation Sterilizers, Inc. in Westerville, Ohio. We have also discussed the data with W. Remini (DOE) and G. Tingey (Pacific Northwest Laboratory).

DOE is satisfied that the temperature data is repetitive and predictable, so they recommend removal of the thermocouple attached to the dummy WESF capsule. They believe that the data obtained from the stationary thermocouple will be adequate for evaluation purposes. Therefore, we do not object to removal of the thermocouple on the dummy capsule, provided that the stationary thermocouple is maintained.

John W. N. Hickey

John W. N. Hickey, Section Leader
Industrial, Medical, and Academic Section
Material Licensing Branch
Division of Fuel Cycle and Material Safety

Enclosures:
1. Ltr fr W. Remini to J. Hickey dtd 01/28/86
2. Undated ltr fr J. White to R. Heusser (received 04/02/86)

Control No. 79569

APR 16 1986

MAY 21 1986

Radiation Sterilizers, Inc.
ATTN: Mr. Allan Chin
President
3000 Sand Hill Circle, 4-245
Menlo Park, CA 94025

Dear Mr. Chin:

Enclosed is Amendment No. 08 to your NRC License No. 04-19644-01 in accordance with your request.

This amendment grants approval of your request to remove the thermocouple from the dummy WESF capsule. The Department of Energy will rely upon the data collected from the stationary thermocouple for evaluation purposes. Therefore, the stationary thermocouple must remain in place.

If you have any questions or require clarification on any of the information stated above, you may contact us at (312) 790-5625.

Sincerely,

Original Signed By
William J. Adam, Ph.D.
Materials Licensing Section

Enclosure: Amendment No 08

RIII

Adam/bs
05/ /86

m 374A

EGULATORY COMMISSION

PAGE 1 OF 1 PAGES

License number 04-19644-01

Docket or Reference number 030-19025

Amendment No. 08

MATERIALS LICENSE
SUPPLEMENTARY SHEET

tion Sterilizers, Inc.
Sand Hill Circle,
Park, CA 94025

cordance with letter dated August 19, 1985, License Number 04-19644-01 is amended llows:

tion 20. is amended to read:

Except as specifically provided otherwise in this license, the licensee shall conduct its program in accordance with the statements, representations, and procedures contained in the documents including any enclosures, listed below. The Nuclear Regulatory Commission's regulations shall govern unless the statements, representations and procedures in the licensee's application and correspondence are more restrictive than the regulations.

A. Applications dated January 21, 1981 and August 30, 1983; and

B. Letters dated June 4, 1981, February 4, 1983, April 18, 1983, May 12, 1983, July 19, 1983, October 28, 1983, November 9, 1983, November 28, 1983, April 2, 1984, April 3, 1984, November 8, 1984, April 4, 1985, September 5, 1985, September 6, 1985, February 14, 1986, and August 19, 1985 (Item A only).

For the U.S. Nuclear Regulatory Commission

MAY 21 1986

Original Signed
By William J. Adam
Materials Licensing Section, Region III

COPY 3 pv

STATE OF GEORGIA CORRESPONDENCE

INDEX TO STATE OF GEORGIA CORRESPONDENCE

ıronology of correspondence from the State of Georgia licensing file, which ects the licensing activities, is summarized and presented below:

t	From	To	Subject
ı/83	(NRC) Nussbaumer	State Agreement Officers	NRC report on potential design hazard associated with large irradiators
ɜ/84	(RSI) Chin	St. of GA	Application for license of irradiation facility at Decatur, GA
/84	(RSI) Chin	(NRC) Wang	Amendment to License
1/84	(NRC) Woodruff	(GA) Hill	Comments on RSI license application
9/84	(GA) Hill	(RSI) Chin	Response to license application denying consideration for cesium-137 licensure; requests more information
:6/84	(NRC) Bassin	(RSI) Chin	Denies 4/4/84 license amendment request until more information available on the effects of thermal cycling
:3/84	(RSI) Chin	(NRC) Bassin	Addresses concerns raised in Bassin's 6/26/84 letter
21/84	(RSI) Chin	(GA) Hill	Additional information supplied; also states use of cesium capsules has been verbally approved by NRC
26/84	(GA) Hill	(RSI) Chin	State of Georgia awaiting information on cesium-137 from NRC. Requests additional information on license application
ı/4/84	(RSI) Chin	(GA) Hill	Response to requested information. Expects to receive confirmation of

Date	From	To	Subject
			approval for use of cesium-137 from NRC shortly
10/18/84	(GA) Hill	(RSI) Chin	Requests information on questions not answered in last letter
10/31/84	(RSI) Chin	(GA) Hill	Requested information provided in corrected copy of 10/4/84 letter, dated 10/31/84. Letter enclosed from NRC regarding use of cesium. NRC not willing to license cesium at this time. Use of cesium at Decatur facility will be requested pending approval for use at Westerville, OH facility
11/1/84	(RSI) Fisher	(GA) Hill	Regarding conversation of 10/30/84 concerning RSI request for a temporary license to store cobalt 60 until permanent license issued
11/8/84	(RSI) Chin	(NRC) Ayer	States intention to use Decatur facility as cesium-137 demonstration unit with Westerville facility as second unit. Supplemental information included
11/14/84	(GA) Hill	(RSI) Chin	Reply to letters of 10/31/84. Will not consider licensing Decatur facility for cesium until RSI demonstrates operation with a good compliance history
12/03/84	(RSI) Fisher	(GA) Hill	Information requested at 11/30/84 meeting provided regarding storage of cobalt 60
12/07/84	(GA) Connell	RSI	Radioactive material license for storage only of cobalt 60 at Decatur facility issued by St. of GA

1/1 COPY 2 m.139

Date	From	To	Subject
12/10/84	(NRC) Singer	(RSI) Chin	Reply to 11/8/84 letter stating intent to use WESF capsules in a demonstration at Decatur facility. Instructs direct communication with State of Georgia and says no further action will be taken on request for license at Westerville
12/14/84	(RSI) Chin	(NRC) Singer	Requests continued action on license for Westerville facility. Due to changes in plant schedules, RSI now plans to use Westerville facility as demonstration facility for cesium capsules
12/26/84	(GA) Hill	(RSI) Chin	Requests specific information to evaluate safety of design
1/10/85	(RSI) Chin	(GA) Hill	Additional information supplied as requested in letter of 12/26/84, concerning safety systems
1/10/85	Reynolds	Pratt	Informs Pratt how to handle new account: RSI. They will not provide normal service for the deionization equipment sold to RSI
1/17/85	(RSI) Chin	(GA) Hill	Provides additional responses to items requested in 12/26/84 letter, not covered in 1/10/85 letter, concerning operating procedures and training
1/23/85	(PNL) Tingey	(Sandia) Reuscher	Examination of WESF cesium-137 capsules used in SIDSS
2/1/85	(NRC) Cunningham	(NRC) Nussbaumer	Evaluation and conclusions by NMSS staff re licensing of WESF capsules
2/8/85	RSI	NRC	License amended to use Co-60

Adam/cm
1/28/86

Mallett Axelson

Date	From	To	Subject
4/4/85	(NRC) Hickey	(RSI) Chin	Answer to 4/3/84 letter from Chin and many phone calls requesting license amendment
4/4/85	(RSI) Chin	(NRC) Hickey	Conditions of license amendment proposed by and agreed to by RSI
4/8/85	(NRC) Hickey	RSI	License amendment
5/15/85	(NRC) Woodruff	(GA) Rutledge	Memo from St. of GA re NRC granting licenses to RSI to use cesium-137 capsules in Ohio and Ill. facilities
6/5/85	(NRC) Axelson	(RSI) Chin	Safety inspection conducted by NRC on 5/13/85. Report attached. RSI in non-compliance on some items
7/22/85	(RSI) Chin	(NRC) Hickey	Status report: executed leases with DOE; fabricated shipping containers; final approval from Rockwell; trucking contracts signed; plant modifications. Request permit to use cesium-137 in Decatur facility.
7/25/85	(NRC) Hickey	(RSI) Chin	Comments on 7/22/85 letter
8/16/85	(RSI) Chin	(GA) Hill	Request for amendment to the license to permit use of cesium-137 at the Decatur facility. Cites NRC approval for cesium use at Westerville facility and includes related correspondence between RSI and NRC
8/29/85	(NRC) Nussbaumer	Chapell	Asks for review of RSI request to authorize use of cesium capsules at Decatur

Date	From	To	Subject
10/21/85	(NRC) Miller	(NRC) Nussbaumer	States intent to consider NRC applications for use of cesium capsules at other irradiator facilities. Enclosure to DOE (Jicha) discusses licensing actions to date & understandings on which license granted to RSI. Notification that NRC will now consider license applications for WESF capsules in wet storage irradiators.
10/23/85	(NRC) Nussbaumer	All agreement	Encloses Jicha letter (above) and announces change in NRC policy to consider license applications for use in additional wet storage irradiators
11/7/85	(NRC) Nussbaumer	All agreement	Asks that applications from states be coordinated with NRC through Regional States Agreements Officer
12/2/85	(GA) Hill	(RSI) Chin	Replies to letters of 10/30/85 and 8/16/85 regarding use of cesium-137 capsules. Pending receipt of additional information, will resume processing of amendment for cesium use at Decatur.
12/10/85	(RSI) Chin	(GA) Hill	Provides information requested in 12/2/85 letter regarding emergency procedures for cesium capsules provided
12/17/85	Dahl	(RSI) Chin	Notification on allocation of ORNL cesium. Requests additional information by 12/27/85
1/6/86	(GA) Hill	RSI	License amended to use cesium-137 with a temperature monitoring system

Date	From	To	Subject
3/12/86	(GA) Hill	RSI	Corrected license amendment for use of cesium at Decatur facility without a temperature monitoring system
1/16/87	(RSI) Fisher	(GA) Ingram	Revisions to license discussed on 12/29/86 concerning ventilation system.
3/19/87	(RSI) Fisher	(GA) Ingram	New procedure on manually lowering source racks during power outage.
4/30/87	(RSI) Fisher	(GA) Ingram	Request to amend key control policy.
9/10/87	(RSI) Fisher	(GA) Ingram	Request to increase time delay for safety system.
9/14/87	Consultant	(GA) Hill (Carter)	Recommendation for improvements in radiation protection control at Decatur.
9/25/87	(RSI) Fisher	(GA) Ingram	Regarding request for "radiation employees" only to wear film badges.
11/11/87	(RSI) Fisher	(GA) Ingram	Notification that changes have been completed to comply with non-compliance issue of 2/18/85.
11/24/87	(RSI) Fisher	(GA) Ingram	Request to enlarge unrestricted area because of modification discussed in letter of 11/11/87.
5/23/88	(GA Tech) Kahn	(RSI) Fisher	Water sample submitted on 5/10/88 shows 48 picocuries/l cesium-137.
6/6/88	(RSI) Fisher	(GA) Hill	Notice that production has ceased and will not resume until cleanup completed.

Date	From	To	Subject
6/11/88	(RSI) Chin	(GA) Hill	Request to allow DOE to operate under RSI license in recovery operations.
6/15/88	(GA) Ledbetter	(DOE) LaGrone	Confirms Georgia's request on 6/11/88 to DOE for assistance in managing recovery operations at Decatur.
6/17/88	(NRC) Cunningham	(DOE) Baublitz	Requests advice on what to do about other irradiators with cesium-137.
6/24/88	(DOE) Hultgren	(RSI) Chin	Requests permission for Type B team to visit Decatur.
7/1/88	(DOE) Hultgren	(GA) Hill	Requests additional information not obtained during Decatur visit concerning HEPA filters, temperature monitoring.
7/28/88	(GA) Hill	(DOE) Hultgren	Information requested in 7/1/88 letter supplied.

Ref: [illegible]

[illegible] 13 [illegible]

MEMORANDUM FOR: Regional State Agreement Officers
SA Staff

FROM: Donald A. Nussbaumer
Assistant Director for
State Agreements Program
Office of State Programs

SUBJECT: POTENTIAL DESIGN HAZARD IN LARGE IRRADIATORS

Attached is a copy of an NRC staff report on a potential design hazard associated with large irradiators. We do not know how widespread or significant the problem is and will keep you advised.

D. J. Nussbaumer for

Donald A. Nussbaumer
Assistant Director for
State Agreements Program
Office of State Programs

Enclosure:
As stated

January 7, 1983

Note to John Hickey and Wendy Miller

Today I received a telephone call from Don Anderson, Ph.D., State of Texas. (I have known Don for several years) He informed me of a potential hazard associated with some large irradiators in Texas. While inspecting one of these irradiators in Sherman, Texas (AECL type) he found that the electronic circuit control board was located on top of the irradiator and outside the facility. This circuit board was readily accessible to anyone by means of a ladder. Don demonstrated to an AECL engineer that it was very easy, by means of wires and alligator clips, to expose the source in the irradiator without entering the building.

I think the above is a significant potential hazard and merits our immediate attention. (Don will send us a report of his findings in the near future) I suggest that we call each of our irradiator licensees and inform them of the potential hazard discovered by Don Anderson. Don says that anyone with a limited knowledge of electronics could expose the source without the knowledge of persons inside the building. (In most cases I am sure a radiation alarm would sound but some significant exposures could still occur.)

We should urge our irradiator licensees to take immediate action to secure electronic circuit controls so that a disgruntled employee or any other individuals would not be able to gain access to them.

Paul R. Guinn

3895

Georgia Department of Human Resources
Radiological Health Section

APPLICA 'ON FOR RADIOACTIVE MATERIAL LICENSE

:TIONS — Complete items 1 through 13. Use supplement sheets where necessary. Item 13 must be completed. Mail to: Georgia ent of Human Resources, Radiological Health Section, 47 Trinity Avenue, S.W., Atlanta, Georgia 30334-1202. Upon approval application, the applicant will receive a Georgia Radioactive Materials License. Georgia Radioactive Materials License is issued in ice with the general requirements contained in the Georgia Department of Human Resources Rules and Regulations, designated 290-5-23.

f Applicant: .ation Sterilizers, Inc.	Area Code: 415	Telephone: 854-2800	3. Department, Location or Addresses at Which Used and/or Stored: ☐ Check if same as Item 1 only
dress:) Sand Hill Rd., #2-190 .o Park, CA	Zip Code: 94025		Radiation Sterilizers, Inc. 2300 Mellon Court Decatur, GA 30035
License Application	License No.:	☐ Renewal ☐ Amendment	☐ Temporary Job Sites in Georgia ☐ Out of State (List States)

RADIATION PROGRAM PERSONNEL	TITLE OR FUNCTION	RESUME: Prev. Subm. Date	Attachment	Page or Item
sponsible for Radiation Protection: in Chin	President & Corporate RSO			

SEALED SOURCES

SOTOPE: Mass No.	Number of Sources	Max. Activity Per Source	SOURCE: Manufacturer	SOURCE: Model	Device Or Storage Container: Manufacturer	Device Or Storage Container: Model	USE	IF APPLICABLE: Attachment	IF APPLICABLE: Date Prev. Subm.
60	5MCi	12,000 curies	AECL	C-188	RSI	Atlanta	The primary use of the material will be to sterilize single-use medical devices for the health care industry. Secondary usage may be for material effects studies on materials, equipment, electronics, gemstones, and food products.		
60 ?	5MCi	12,000 curies	N.P.I.	NPRP 450-14-C	RSI	Atlanta			
137 ?	35MCi	70,000 curies	USDOE	WESF capsules	RSI	Atlanta			

---

ojected maximum loading. Shielding will be gned for 10 MCi loading of Cobalt-60. The mated curie equivalent between Cesium-137 Co-60 is 7 to 1. The initial loading into facility will be 1MCi Co-60 or Cs-137 equi- ent. Incremental additional loadings will nade to accommodate decay and new business.

SCHEDULE OF RADIOACTIVE MATERIALS

SOTOPE: Mass No.	Maximum Possession Activity	CHEMICAL FORM	PHYSICAL STATE	USE	IF APPLICABLE: Attachment	IF APPLICABLE: Date Prev. Subm.

PHYSICS INSTRUMENTATIO.	Not Applicable	Previously Submitted Date	Attachment	Page or Item

MANUFACTURER	MODEL	Quantity	Radiation Detected	Date Or Count Range	Energy Range	Type, Use Or Purpose	CALIBRATION Company or Procedure	CALIBRATION Frequency
ex, Inc.	304A	2	gamma	0-100 mR/hr	80K to 1.5 MeV	G-M Tube	Xetex, Inc.	6 mos
ex, Inc.	305A	1	gamma	0-100,000 mR/hr	80K to 1.5 MeV	G-M Tube	Xetex, Inc.	6 mos
ex, Inc.	415A	4	gamma	0-10,000 mR/hr	80 K to 1.5 MeV	G-M Tube	Xetex, Inc.	12 mos

GENERAL INSTRUMENTATION	Not Applicable	Previously Submitted (Date)	Attachment	Page or Item

MANUFACTURER	MODEL	Quantity	Radiation Detected	TYPE, USE OR PURPOSE
ex, Inc.	501A	2	gamma	Radiation Area Monitor

PERSONNEL MONITORING	Radiation Detected	Not App.	Prev. Subm. (Date)	Attachment	Page or Item
Name of Supplier: RS Landauer Jr & Co. / Glenwood, IL					
Exchange Period: monthly	☐ Alpha ☒ Beta ☒ Gamma				
Where Worn: body	☐ Neutron ☒ X-Ray ☐ Radon				
Manufacturer: Xetex, Inc.	Radiation Detected				
Model: 415A Max. Range: 0-10,000	☐ Alpha ☐ Beta ☒ Gamma				
☒ Direct Reading mR	☐ Neutron ☒ X-Ray ☐ Radon				
Laboratory:					
Type of Sample: Frequency of Samples:					
Radiation or Radioactive Material Assayed:					
Describe: wallet dosimeters - exchanged every 12 mos. ?					
AREA MONITORING					
Examination Surveys: Routine Frequency— n/a each loading /					
Radiation Area Surveys: Routine Frequency— daily; facility surveys after /					
Environmental Surveys: ☐ Air ☒ Water Where— pool Frequency: 6 mos.					
LEAK TESTS					
Company: Helgeson Nuclear / ~~Pleasanton, CA~~ ☒ Evaluated by Applicant (Attach Procedure)					
Contract No.: Frequency: pool water tested every 6 mos.					
WASTE DISPOSAL					
Company: spent isotope will be returned to vendors					
Maximum Total Activity: Maximum Storage Period:					
Operation ☐ Storage ☐ Burial ☐ Sewer System ☐ Ship to Licensed Recipient					
ATTACHMENTS					
Radiation Protection Program					
Physical Facilities					

CERTIFICATE (This item must be completed by applicant)

The applicant and any official executing this certificate on behalf of the applicant name in Item 1, certify that this application is prepared in conformity with Georgia Department of Human Resources Rules and Regulations, designated Chapter 290-5-23 and that all information contained herein, including any supplements attached hereto, is true and correct to the best of our knowledge and belief.

Action Sterilizers, Inc.
Applicant Named in Item 1 (Print or Type)

Allan Chin
Signature

Allan Chin
President
Title of Certifying Official

March 19, 1984
Date

851 (Rev. 3-82) (Reverse Side)

Georgia Department of Human Resources

RADI. OGICAL QUALIFICATIONS AND TR. NING

		FORMAL RADIATION TRAINING TITLE OR DESCRIPTION & LOCATION	DATES	RADIOISOTOPE EXPERIENCE
Chin Date Page or Item		V.P. International Neutronics, Inc., Palo Alto, CA. Designed, built, operated 400 KCi cobalt sterilization facility	1969 to 1977	400,000 Ci Co-60
College or University	Degree/Year	President Radiation Sterilizers, Inc. Designed, built and operated 4 large cobalt sterilization facilities in Los Angeles, Denver, Chicago and Columbus, Ohio	1978 to pres	approximately 5MCi Co-60
	BS ChE 1952 MS ChE 1953			
C. Meyer Date Page or Item		Application specialist for test reactor isotope production and nuclear fuel irrad. programs G.E. Co. Vallecitos, CA	1964 to 1968	various reactor isotopes
College or University	Degree/Year	Prod Mgr Radiographic and process radiation equipment. Varian Assoc. Palo Alto, CA	1968 to 1980	high energy beam accelerators
of Miss.	BS ME 1956	V.P. Radiation Sterilizers, Inc. Technical Marketing	1980 to pres	approximately 4MCi Co-60
s W. Hurley Date Page or Item		Director Product Dev. and QA American Hosp. Supply Corp. Evanston IL. Feasibility study for 6MCi Co-60 facility for El Paso, TX	1975 to 1978	1.7 MCi Co-60
College or University	Degree/Year	General Mgr, RSO, Radiation Sterilizers Inc. Schaumburg, IL facility. Assisted in Cobe Labs startup Denver, CO	1981 to pres	2 MCi Co-60
of Wisc.	BS ChE 1956			
P. Fairand Date Page or Item		Supervisor-Battelle Nuclear reactor in Columbus, Ohio		critical assembly facility, nuclear research reactor, hot cell facility, plutonium fabrication plant, and enriched uranium. Source activities in the megacurie range.
College or University	Degree/Year	General Manager, Radiation Sterilizers Inc. Columbus, Ohio facility	1983 to pres	1MCi Co-60
yne College Detroit State Univ	BS 1955 MS 1957 PhD 1969			

(3-82)

10. Low level water alarm.

11. Seismic alarm.

When any of these conditions occur, the cause will be indicated at the control station.

Attachment
Application for Radioactive Material License
Item 5A

adioisotope and Sources

This facility has been designed to utilize both cobalt-60 and esium-137. The recent short supply of cobalt has made it necessary o be flexible enough to use alternate cobalt sources as well as esium-137 which is being produced from the U.S.D.O.E. Plan for ecovery and Utilization of N clear Byproducts from Defense Wastes.

The AECL C-188 pencil is the most common form used in Cobalt-60 ndustrial radiators.

Neutron Products, Inc. of Dickerson, MD is an alternate supplier f cobalt-60 industrial isotope sources. Applications for approval of he BN-450-14 source configurations have been submitted for approval y N.P.I.

The U.S.D.O.E. supplies Cesium-137 in the form of the capsules the Hanford Waste Encapsulation Facility (WESF). Approval for se of these capsules as sealed sources in industrial irradiators is n process.

Only approved sealed source configurations will be used, and pproval confirmed with the Georgia Department of Human Resources rior to purchase. All source elements will be doubly encapsulated in tainless steel.

evice or Storage Container

The isotopes will be used and stored in the RSI facility in ecatur, Georgia. The source elements are stored in racks which are aised from the bottom of a water storage tank and positioned entrally in a shielded room for use.

The storage pool is 24' deep and constructed of 0.125" stainless teel, backed up by 16" of steel reinforced concrete. The water is irculated through a filtration and de-ionizing system to maintain its uality. A water cooler is used to cool the pool water at higher sotope loadings.

The shielded gamma cell is 13'-8" H x 45' L x 23' W with concrete hielding walls up to 83" thick.

RECEIVED
NOV 2 1994
RADIOLOGICAL

Attachment
Application for Radioactive Material License
Item 5A

Electric winches raise and lower the racks with limit switches controlling up and down positions. Use of an Uninterruptable Power Supply (UPS) insures that all racks will be lowered when a 10 second (or longer) power failure is detected and is concurrent with time-out of the preset cycle dwell timer.

Ref. Section No. 1 "General Description of Facility"
Section No. 5 "Biological Shield Calculations"
Section No. 7 "Design Safety Analysis"
Section No. 8 "Source Control System"
Section No. 15 "Water Treatment System"
Section No. 16 "Ventilation System"

Attachment
Application for Radioactive Material License
Item No. 6

Two types of survey meters are used in this facility, both of which provide a digital readout. The manufacturer of the meters is:

Xetex, Inc.
660 National St.
Mountain View, CA 94043

Both the 304A and 305A models are used as general survey meters. The model 305A, having an extended range up to 100 Rads/hr, is capable of operating without blanking out in high radiation fields.

These instruments are used whenever entry is made into the gamma cell to assure that there are no radiation fluxes present. As such, they are a double check on the cell ion chamber.

They are also used to survey around the facility during and after loading sources. They are not used to run source leak tests. These tests are subcontracted out to certified test labs.

The 415A meters are used to monitor visitors to the gamma cell. Since they also have a chirping capability, they are routinely taken into the cell whenever entry is made, along with the previously mentioned survey meter.

The survey meters are calibrated on a six-month schedule, and the personnel dosimeters on a twelve month schedule. These calibrations will consist of at least a two point check on each scale of each instrument with the two points separated by at least 50% of the scale. All values must be within 10% of scale readings for proper calibration. All damaged meters will be calibrated at the time of repair.

Meter calibrations will be performed by Xetex, Inc. with traceability to NBS standards.

124

The survey meters are checked routinely prior to each use by a small check source which indicates that they are in an operable condition.

Ref. Section No. 3 "Gamma Cell Safety System"
Section No. 6 "General Operating Procedures"
Section No. 11 "Radiation Safety Maintenance Program"

Attachment
Application for Radioactive License
Item No. 8

All employees will be given a pre-employment physical examination to establish baseline data on whole blood count.

Routine monthly monitoring will be accomplished through XBG film badge type dosimeters. Back TLD wallet dosimeters will be used and evaluated on an annual basis unless a suspected exposure is encountered on the XBG badges in which case they will be developed immediately.

Pocket dosimeters for visitors will be Xetex model 415A digital type with chirp capability. These will be calibrated annually by the vendor. Their range is 0 - 9,999 mR.

Ref. Section No. 6 "Administration of Radiation Controls"
Section No. 11 "Radiation Safety Maintenance Program"

Attachment
Application for Radioactive Material License
Item No. 9

Only sealed sources will be used in this facility. Contamination surveys are generally not required in this type of facility.

A complete radiation survey will be made around the periphery of the radiation cell after each source loading. The survey will encompass the roof as well as all of the walls and maze opening.

General surveys are performed informally on a daily basis, since procedures require that an operable survey meter be taken into the cell upon each entry. Abnormal radiation levels would easily be observed.

The sources are checked for leaks by monitoring the pool water on a semi-annual basis. The pool water is checked additionally after each source loading. A film badge is located adjacent to the pool filter which is read on a monthly basis.

The exhaust air passes through a roughing filter and a HEPA filter prior to discharge to the atmosphere. Periodic checks are made of the HEPA filter with a survey meter.

Leak checks of Hepa Filter

Ref. Section No. 4 "Administration of Radiation Controls"
Section No. 11 "Radiation Safety Maintenance Program"
Section No. 15 "Water Treatment Systems"
Section No. 16 "Ventilation System"

Attachment
Application for Radioactive Material License
Item No. 10

Source Leak Tests

Since dry source wipe tests are impractical, a sample of the storage water from the pool will be tested on a six month schedule for radioactive contamination in excess of 0.05 uCi of activity per source. Additionally, the water will be tested after each source loading.

? Leak test contamination limits are high?

These tests will be performed by:

Helgeson Nuclear Corp.
5587 Sunol Blvd.
Pleasanton, CA 94566

Ref. Section 11 "Radiation Safety Maintenance Program"
Section 15 "Water Treatment System"

Conservative assumption for maximum possible Co60 - 3×10^{-5} uCi/ml.

$$\frac{25\,ft\ long \times 24\,ft\ deep \times 6\,ft\ wide \times 7.48\,gal/ft^3}{.26417\,l/gal} \times 1 \times 10^3\,ml/l = 1.0194 \times 10^{8}\,ml$$

With 1 MCi

$$\frac{1\,MCi}{12{,}000\,Ci/sec} = 84\,sec$$

.05 uCi/sec × 84 sec = 4.15 uCi

$$\frac{.42\,uCi}{} = 4.121 \times 10^{-9}\,uCi/ml$$

$$\frac{4.15\,uCi}{1.0194 \times 10^{8}\,ml} = 4.071 \times 10^{-8}\,uCi/ml.$$

With 5 MCi

$$\frac{5 \times 10^6\,Ci}{1.2 \times 10^4\,Ci/sec} = 416.6\,sec$$

.05 uCi/sec × 417 sec = 20.85 uCi

With 10 MCi

$$\frac{10 \times 10^6\,Ci}{1.2 \times 10^4\,Ci/sec} = 833.3\,sec$$

.05 uCi/sec × 834 sec = 41.7 uCi
÷ 17
41.7

Attachment
Application for Radioactive Material License
Item No. 11

Additional isotope will be added to the source racks as required to accommodate decay and increased processing requirements. Only when the rack capacity is fully utilized, will isotope be removed.

Spent isotope will be returned to the vendor for disposal.

Attachment
Application for Radioactive Material License
Item No. 12a & 12b

The information regarding the radiation protection program and physical facilities will be referenced to specific questions listed in U.S.N.R.C. Regulatory Guide 10.9, items 13 to 17.

Attachment
Application for Radioactive Material License
Ref. U.S.N.R.C. Regulatory Guide No. 9
Item No. 13

The overall plan view of the building and the shielding dimensions are shown in the attached drawings:

503-100)
503-600) Refer to Section No. 5 "Biological Shielding Calculation
503-601.

The overall plan shows the relative locations of the gamma cell, offices, and warehouse areas.

Attachment
Application for Byproduct Material License
Item No. 13a

The RSI facility will consist of a single building located at 2300 Mellon Court, Decatur, Georgia. It is located in the Snapfinger Woods Industrial Park which is zoned M-1, warehouse/industrial. A location map is enclosed. The only restricted area of the facility will be the maze and gamma cell. The shielding was designed to provide less than 0.25 mR/hr at all external surfaces with a 10 MCi Cobalt-60 source loading. We do not expect the maximum source loading to exceed 5 MCi of Cobalt-60. The shield will be capable of shielding up to 70 MCi of cesium-137, but only 35 MCi maximum loading is anticipated.

Ref. Section No. 5 "Biological Shield Calculations"
Section No. 14 "Property Description"

Section 1

Description of the RSI Gamma Facility

This facility is designed to sterilize prepackaged medical device products for the health care industry utilizing a controlled radioisotope source. The basic components consist of a biological shield, a source system, a safety system, and a conveyor system for transporting the material through the cell. The system is highly automated and controlled by a Texas Instruments programmable controller.

The biological shield is designed to meet the requirements of a non-controlled area, with radiation emission rates less than 0.25 mR/hr. It consists of a concrete cell and an entrance maze to allow access by a continuous overhead conveyor. A 24-foot deep pool below floor level is used for isotope storage. A detailed description of the biological shield is presented in Section No. 5.

This facility has been designed to operate with either cobalt-60 or cesium-137 radioisotope.

The cobalt-60 source elements are doubly encapsulated, welded stainless steel pencils approximately half inch in diameter and 18 inches long. Typically they would be AECL C-188 source elements, although similar sources could be used from other isotope vendors. These elements are delivered to the RSI facility in DOT-approved shipping casks from the isotope suppliers.

The cesium-137 source elements are doubly-encapsulated, welded stainless steel capsules, 2.625" diameter x 20.77" long. They are supplied by the U.S.D.O.E.

Professional crane operators transfer these casks from truck trailers to the bottom of the 24-foot deep storage pool via an opening in the roof of the gamma cell. The source elements are removed from the cask and loaded into the source racks while under the protective layer of water.

Pls change to the
first line original
application

With cobalt-60, up to ten source elements are loaded into a module prior to transfer to the storage racks. The cesium WESF capsules are loaded directly into the source rack. This facility utilizes four source racks each approximately 7.5 feet long, 13 feet high and 5 inches thick. Stainless steel guide wires are used on either end of the source racks to control their positions. Electric winches raise and lower the racks with limit switches controlling up and down positions. Use of an Uninterruptable Power Supply (UPS) insures that all racks will be lowered when a 10 second (or longer) power failure is detected and is concurrent with time-out of the present cycle dwell timers.

When the facility is in use, the source racks will be centered vertically on the product carriers. Access to the room is obtained by lowering the source racks to the bottom of the pool.

The storage pool is 25 feet long, 24 feet deep and 6 feet wide. is constructed of reinforced concrete with an 0.125-inch thick stainless steel liner. The water in the pool will be de-ionized and filtered by circulating it through a water treatment system located adjacent to the cell. The level in the pool is controlled within preset limits. Any deviation from these limits will result in the appropriate alarms along with system shutdown. All penetrations in the pool lining are within the top 2 feet.

The components within the pool are constructed of stainless steel to minimize corrosion. Some of the external plumbing will be plastic.

The safety system has been designed to meet or exceed all of the requirements for facilities of this type. A detailed description of the safety system is given in Section No. 3.

Material to be processed is conveyed through the cell on three-tiered carriers supported by an overhead power and free conveyor system. Product is loaded into metal tote boxes which in turn are loaded onto the bottom shelf of the three-tiered carrier. To obtain maximum dose uniformity to the product, each tote passes through the radiation cell three times, once at each shelf level. The totes are automatically elevated one level after each pass through the cell. After the third pass, they are automatically removed from the carrier and transported to the unloading area. Refer to Section No. 2 for a detailed description of the conveyor operation.

The design of the facility was performed by the architectural firm of Webb-Pillert, Inc., 3 Dunwoody Park, Suite 128, Atlanta, GA 30338 (404-394-1736). The 21,185 square foot facility was designed and built to meet all local structural and seismic requirements.

Section No. 2

General Description of Conveyor Operation and Material Flow

The warehouse area in the building is divided into two separate parts, one for incoming non-sterile product and the other for out-going sterile product. Material flow is into the non-sterile area, through the gamma cell, and out to the sterile area.

Input Conveyor

The product is manually loaded into metal totes of dimensions 25" x 60" x 41" on the input conveyor in the non-sterile area. After loading, they are moved to the carrier loading station. All subsequent operations will be automatic until the totes are manually unloaded in the sterile area.

The live roller accumulating conveyor prior to the carrier loading station will have an escapement unit at the end to meter filled totes into the loading station for transfer to the product carriers. This conveyor will also have a line full device that, when full, will lock out the belt conveyor feeding the accumulating conveyor. There will also be a low level warning to indicate to the material handler that only a few totes are left on the accumulating conveyor. Additional totes must be loaded onto the input conveyor or the system will automatically shut down when the last tote is loaded onto a product carrier.

Tote Transfer Station

All tote transfers will be performed at this station. Two elevators will permit the loading or unloading of a tote from any of the three shelves. During each cycle, a completed tote is normally removed from the top shelf, the other two totes are elevated one shelf each, and a new tote is inserted onto the bottom shelf.

All product carriers entering or leaving this station will contain three totes.

eneral Description of Conveyor Operation and Material Flow

roduct Conveyor

The product conveyor is a power and free overhead conveyor which s used to move the loaded product carriers through the gamma cell. ach carrier is supported by dual "free" trolleys operating ndependently in the "free" conveyor track. Each trolley has a load apacity of 1,200 pounds resulting in a carrier load capacity of 2,400 ounds.

The conveyor runs in a continuous loop from the tote transfer tation, through the cell, and back to the tote transfer station. utomatic controlled engagement of the drive chain to the free rolleys permits accumulation of the carriers within the cell as well s positioning at the transfer stations.

utput Conveyor

This combination powered belt and roller conveyor receives the inished totes from the product carrier and transports them to the t le area for unloading and staging for shipment. This conveyor l has accumulation capability and will shut the system down when he exit line is full. The output conveyor line will also have a line ull warning.

osage Control

The amount of radiation absorbed by the product is controlled by he cycle timer setting. The design of the facility dictates that the ath which each tote follows is identical. For known source trengths, which are readily predictable from decay characteristics, he time of exposure governs the dosage delivered. The product arrier motion within the cell is intermittent such that control of he interval will control the dosage.

ontrol Station

The control station will be located in the control room and nclude the following controls and lights:

1. Start/stop lighted push button for product conveyor and system operation.

2. Up/neither/down lighted push button for source #1.

ection No. 3

Gamma Cell Safety System

esign Criteria

The system was designed to be as fail safe as possible. Audible arnings will be a combination of distinct bells and buzzers. The ystem, will be line-powered. In the event of a power failure, a tandby battery system will provide for an orderly shutdown and pproximately six hours of critical supervisory control. Any safety ystem component failure will result in a system shutdown.

earch/Security System

Prior to leaving the radiation cell, operators are required to onduct a visual and audible check of the cell to assure that everyone lse is out of the cell. Upon completion of the search, a keyed witch inside the cell is activated using the master key. Only one uch key is available in the gamma cell area, with duplicate keys ontrolled by the facility manager.

Closure of this switch will start a warning light to flash and ctivate an audible warning which will indicate that the system is bout to be activated. This will constitute a final warning where the earch failed to detect someone remaining in the cell. The closure will also initiate a time delay of 30 seconds on the audible alarm.

During this 30 second delay period, a second keyed switch must be closed outside of the maze entrance. Closure of this switch will activate the maze photocell, the pressure mats inside the maze entrance, and close the maze doors. The key is then inserted into the third key switch on the console. When all interlocks are complete, the safety chain can be armed. The sources may then be raised and the conveyor started.

Removal of the key, which is captive in the ON position, will automatically cause the source to be lowered into the storage pool, and to stop the conveyor.

Lighted signs at the entrance to the maze will show the source status by indicating whether entry is permitted or not. It will indicate NO ENTRY as soon as the console keyswitch is set. When a source is not completely DOWN, or when there is radiation detected in the cell or in the maze, the sign will also indicate a NO ENTRY condition, regardless of whether or not the keyswitch is set. A red beacon in the maze will flash whenever a source is "not down" or when radiation is present.

Section No. 3

Gamma Cell Safety System

Design Criteria

The system was designed to be as fail safe as possible. Audible warnings will be a combination of distinct bells and buzzers. The system will be powered by an Uninterruptable Power Supply (UPS). During power failures the UPS will provide an orderly system shut down, and then maintain critical supervisory control for approximately six hours. Any safety system component failure will result in a system shutdown.

Search/Security System

Prior to leaving the radiation cell, operators are required to conduct a visual and audible check of the cell to assure that everyone else is out of the cell. Upon completion of the search, a keyed switch inside the cell is activated using the master key. Only one such key is available in the gamma cell area, with duplicate keys controlled by the facility manager.

Closure of this switch will start a warning light to flash and activate an audible warning which will indicate that the system is about to be activated. This will constitute a final warning where the search failed to detect someone remaining in the cell. The closure will also initiate a time delay of 30 seconds on the audible alarm.

During this 30 second delay period, a second keyed switch must be closed outside of the maze entrance. Closure of this switch will activate the maze photocell, the pressure mats inside the maze entrance, and close the maze doors. The key is then inserted into the third key switch in the control room. When all interlocks are complete, the safety chain can be armed. The sources may then be raised and the conveyor started.

Removal of the key, which is captive in the ON position, will automatically cause the source to be lowered into the storage pool, and to stop the conveyor.

A distinct audible signal will be activated whenever the source is being raised or lowered as an additional warning to personnel.

An emergency trip cable will be provided which will run around the walls of the cell. Pulling this cable will trip the search/secure system and drop the sources or prevent them from being raised, and stop the conveyor.

Pushing the emergency stop button located at the console will also trip the search/secure system and drop the sources. Activation of any of the safety system devices breaks the search and requires a new startup.

Since the carriers will be continuously entering and leaving the maze, the photocell is periodically broken by the carriers. During these periods, the photocell interlocks must be by-passed by a signal from the programmable controller which indicates that a carrier is entering or leaving the maze.

To guard against personnel entering the maze with a carrier during a permissive signal, redundant pressure mats are positioned in the maze entry. Any violation of any one of these detectors will constitute a violation of the safety system and cause the sources to be lowered and the conveyors stopped. Before the system can be re-started, the startup procedure must be repeated after the cause of the violation has been cleared.

Additional security is provided by enclosing the area immediately adjacent to the maze entrance. Two sliding doors within this wall enclosure will open and close by a signal from the programmable controller each time a carrier enters or leaves. At all other times, the doors are closed to provide a physical barrier to accidental entry to the maze. A one way door allows exit at all times from the enclosed area.

Radiation Detection Systems

Two systems will be used. The first will detect the presence of 100 mR/hr in the cell whenever the sources are in the down position. Its signal will be displayed at the control station. When the signal is above the trip point, the entry sign will show NO ENTRY.

Gamma Cell Safety System

The second system will detect the presence of 1 R/hr and be located in the second leg of the maze. Its signal will be displayed at the control station. Exceeding the trip point of this meter will drop the sources and stop the conveyor. Both of the above instances constitute a violation of the alarm system.

Source Position Display

The UP, DOWN, and NEITHER positions of the source racks will be displayed at the control station by lights. As mentioned previously, lighted signs outside the maze entrance will indicate when a high radiation condition exists in the radiation cell.

Exposure Time Data

A multi-channel recorder will be used to indicate the status of each source. Each time the sources are raised or lowered, the date and time will be recorded.

Water Level Alarm

Status lamps for water level in the storage pool will be provided on the console indicating HIGH, LOW, OK using signals provided from liquid level control switches.

Smoke/Fire Alarm

Smoke and/or temperature sensors will be used to detect fire in the cell. Signals will be provided to drop the sources and stop the conveyor. This signal will be interlocked to stop the vent fans upon activation.

Seismic Alarm

A seismic detector will be included in the safety system when required. Shock levels exceeding preset values will shut the system down. Decatur is located in a seismic zone 1 area which has minimal seismic requirements.

Emergency Power

A stand-by battery system will be provided which will provide for an orderly shutdown and approximately six hours of critical supervisory control in the event of a power failure.

Gamma Cell Safety System

Cell Entry

Entrance to the cell will be gained by lowering the sources, turning the console key to OFF and removing it. Entry to the cell will only be attempted while carrying the console key and an operable survey meter which should be checked prior to each entry with a check source. Entry should only be made after all sources are in the down position, the sign at the maze entrance indicated ENTRY PERMITTED, and the survey meter shows only background radiation levels.

Conveyor Malfunction

Any conveyor malfunction will cause a signal to be sent from the programmable controller to the safety system which will drop the sources and stop the conveyor if the malfunction cannot be corrected within the pre-set cycle time interval. If the malfunction can be corrected within the pre-set cycle time, the sources will remain up and the system is not shut down.

Emergency Conditions

The following conditions will cause the source racks to be automatically lowered and the conveyor stopped:

1. Trip of the emergency cable in the cell
2. Violation of the maze entrance photocell
3. Trip of the maze pressure mats
4. High level alarm of the maze ion chamber
5. Conveyor jams which cannot be corrected within the pre-set cycle time
6. Pushing the emergency stop button
7. Removal of the console key
8. Loss of electrical power (110 V AC)
9. Smoke or fire

Section 3
Gamma Cell Safety System

10. Low level water alarm.

11. Seismic alarm.

When any of these conditions occur, the cause will be indicated at the control station.

Section No. 5

Biological Shielding Calculations

The biological shield for the RSI Decatur, Georgia facility was calculated to provide less than 0.25 mR/hr dose rates at all external surfaces, and at the entrance to the maze, with a 10 megacurie Cobalt-60 source loading. During operation, the sources are stored in four vertical source racks centrally located in the 13'-8" x 23' x 45' gamma cell. This shield will be more than adequate to shield up to 70 MCi of Cesium-137 because of its lower energy gammas. This calculations considers the worst case.

When not in use, the racks are lowered to the bottom of a 24' deep stainless steel tank filled with water.

Conservative design criteria were used throughout. Actual field checks of radiation levels in and around other RSI facilities, designed to similar criteria, have shown effectively zero radiation leakage.

The cell and maze design are shown in Drawing No. 503-600 and 503-601.

All calculations and layouts have been checked and approved by Mr. Eugene Tochilin, CHP, Certificate No. 60-166.

The following assumptions were made for these calculations:

1. The Co60 activity will be 107 curies or less.

2. A nominal exposure rate of 1.2 R/hr at one meter per curie of activity has been used. For shielding calculations, the entire activity is taken to be a point source central to the source racks.

3. A self absorption factor has been applied for radiation transmitted through the roof and through the end walls. A factor of 1/4 has been used.

4. Minimum density concrete (138 lbs./cu.ft.) is used.

5. Radiation leakage outside the irradiation room shall not exceed 0.25 mR/hr.

6. Straight pipes and conduits shall not penetrate the walls with the axis of the opening in line with the source.

Section No. 3
Radiation Shielding Calculations

7. The TVL for Co^{60} gamma rays is 6.0" for 138 lbs./cu.ft. concrete. 90° scattered radiation has a TVL of 6.0" concrete. 180° scattered radiation has a TVL of 4.5" concrete.

8. Personnel safety features required by state or local agencies will be considered separate from this report.

Drawings No. 503-600 and 503-601 show the shielding proposed for the irradiation facility. A schematic of the plan view (RSI 503-600) is included as Figure A-1. The computed exposure rates are summarized below:

Outside Wall	Inches Concrete	mR/hr
North	77	0.034
South	77	0.034
Roof	73	0.470 (controlled area)
West	83	0.080
East	60	42.1
East	78	0.11

The exposure rate of 42.1 mR/hr behind the east maze wall is located within leg 2 at point E-1. At locations E-2 and E-3 the leakage dose rates are reduced to 0.0014 mR/hr and 0.11 mR/hr respectively. Refer to Figure A-1.

The depth of the water storage pool is 24'. While the sources are in the storage position, there will be a minimum of 16' of water above the uppermost source element. This depth of water is equivalent to 7.23' of 138 lbs./cu.ft. concrete, resulting in a transmission of approximately 10^{-10}.

The air vents are located in remote corners of the room or maze and are designed with their own mazes to attenuate scattered radiation. All cable penetrations through the roof will be lead shielded. Similar vents and cable shields in other RSI facilities have shown only background values while the plant is in operation.

Calculation of exposure rates outside of shielding configuration shown in 503-600 and 503-601:

Section No. 5
Biological Shielding Calculations

1. NORTH AND SOUTH WALLS: 77" concrete.

exposure rate = $\frac{1.2 \times 10^{10}}{\ }$ = 3×10^{9} mR/hr @ m

exposure @ 29' through 77" concrete =

$$\frac{3 \times 10^{9}}{8.84^{2} \times 10^{77/8.6}} = \quad 0.034 \text{ mR/hr}$$

2. ROOF: 73" concrete. (This is a controlled area.)
distance to 2' above roof = 15'
exposure rate @ 15' through 73" concrete =

$$\frac{3 \times 10^{9}}{4.57^{2} \times 10^{73/8.6}} = \quad 0.47 \text{ mR/hr}$$

3. WEST WALL: 83" concrete.
exposure @ 19' through 83" concrete =

$$\frac{1.2 \times 10^{10}}{5.8^{2} \times 10^{83/8.6}} = \quad 0.08 \text{ mR/hr}$$

4. EAST WALL (outside wall): 5' thick (Ref Fig A-1)
exposure rate = 1.2×10^{10} mR/hr @ m

<u>location</u>
E-1 --- exposure rate @ 18' thru 60" concrete = 42.1 mR/hr
E-2 --- exposure rate @ 25' thru 96" concrete = 0.0014 mR/hr
E-3 --- exposure rate @ 32' thru 78" concrete = 0.11 mR/hr

Calculations of exposure rates from scattered radiation down legs 1-5 are based on the formula 13 given on page 63 of NCRP 51 (enclosed). This formula represents a generalized equation for the dose equivalent index, $H_{1,rj}$, or for the dose D_{rj}.

$$H_{1,rj} = \frac{D_0 a_1 A_1 (a_2 A_2)^{j-1}}{(d_1 \cdot d_{r1} \cdot d_{r2} \cdots d_{rj})^2} = D_{rj}$$

Section No. 5
Biological Shielding Calculations

D_{rj} = dose rate outside aperture of the maze (rem)
D_{rj} = dose rate at maze entrance (rads)
D_0 = dose rate at one meter
α = reflection coefficient
A = area of reflecting material illuminated (m^2)
d_1 = distance from source to reflecting material
d_{r1} = centerline distances along each maze length
j = refers to the j-th reflection process

Figure 6 from NCRP 51, page 62, demonstrates how to set up path lengths within a maze containing 5 legs, for a collimated x-ray or gamma source. Figure A-1 shows radiation legs 1 through 5 within the maze.

Because the cobalt-60 approximates a point isotropic source rather than a collimated beam, a somewhat different treatment was applied to determine dose. D_{r-1} at the end of leg 1. Gamma rays incident on the north and south walls were divided into five collimated sources, with each collimated to a 7.5 degree cone angle as shown in Figure A-1. Calculation of dose D_{r-1} from the five collimated sources is 2.61×10^{10} mR/hr as listed in Table 1.

Calculation of Dose Rates D_{r-1} and D_{r-5}

$$D_{r-1} = \frac{D_0 \alpha_1 \sum_1^5 A_1}{\sum d_1^2 \times \sum d_{r-1}^2}$$

Section No. 5
Biological Shielding Calculations

collimated source no.	Σd_1 (m)	Σd_{r-1} (m)	ΣA_1 $(m)^2$
1	6.25	5.64	3.85
2	6.25	5.12	3.85
3	6.43	4.27	4.20
4	6.68	3.26	4.87
5	7.10	2.20	5.13

$$D_{r-1} = 1.2\times10^{10} \times 0.005 \times \left| \frac{3.85}{[6.25\times5.64]^2} + \frac{3.85}{[6.25\times5.12]^2} + \frac{4.20}{[6.43\times4.27]^2} + \frac{4.87}{[6.68\times3.26]^2} + \frac{5.13}{[7.1\times2.2]^2} \right|$$

$$D_{r-1} = 6.0 \times 10^7 [.0463] = \underline{2.61 \times 10^6 \text{ mR/hr}}$$

$$D_{r-5} = D_{r-1} \left| \frac{(\alpha_2 A_2)\ (\alpha_3 A_3)\ (\alpha_4 A_4)\ (\alpha_5 A_5)}{(d_{r-2} \times d_{r-3} \times d_{r-4} \times d_{r-5})^2} \right|$$

$$D_{r-5} = 2.61 \times 10^6 \times \left| \frac{(.02\times5.13)\ (.02\times7.7)\ (.02\times7.7)\ (.02\times7.7)}{(6.25 \times 2.44 \times 62.8 \times 3.35)^2} \right|$$

D_{r-5} = <u>0.04 mR/hr</u> dose rate at entrance to maze for 10^7 curie cobalt-60 source in irradiation room.

Biological Shielding Calculations

NOTE: A reflection of 0.005 is used for primary gamma rays scattered by the north and south concrete walls ($_1$)

A reflection of 0.02 is used for the remaining legs.

A summary of the calculated scattered radiation down legs 1 through 5 is presented in Table 1:

TABLE 1

Dose	Location	Calculated mR/hr
D_{r1}	end of leg 1	2.61×10^6
D_{r2}	end of leg 2	$2 \times 6.75 \times 10^3$(a)
D_{r3}	end of leg 3	3.5×10^2
D_{r4}	end of leg 4	0.86
D_{r5}	end of leg 5	0.04

(a)Dose D_{r2} is the sum of the two legs in Figure A-1. To simplify calculations, the average length of the sum of both legs was used.

The shielding design was based upon a 10MCi cobalt-60 loading into the facility. A practical maximum operating loading for this facility would be 5MCi of cobalt-60 or 35 MCi of cesium-137.

This facility has been designed to operate on cesium-137 as the gamma source. Since the logistics of obtaining sufficient cesium-137 will require a certain period of time, cobalt-60 may be used initially, and then phased out as cesium-137 is available.

Both of the above considerations will result in a very conservative shielding design for using both isotopes

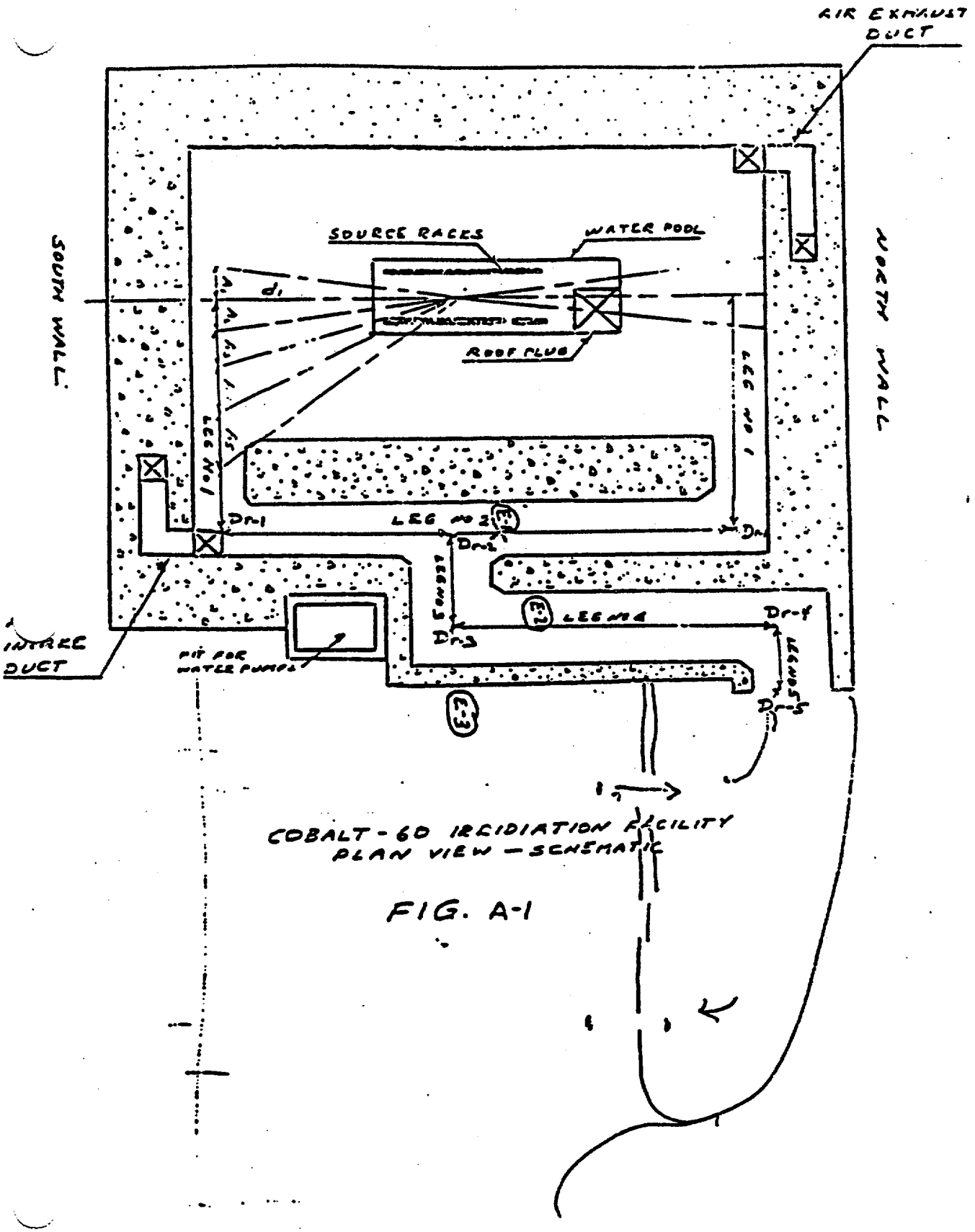

COBALT-60 IRRIDIATION FACILITY
PLAN VIEW — SCHEMATIC

FIG. A-1

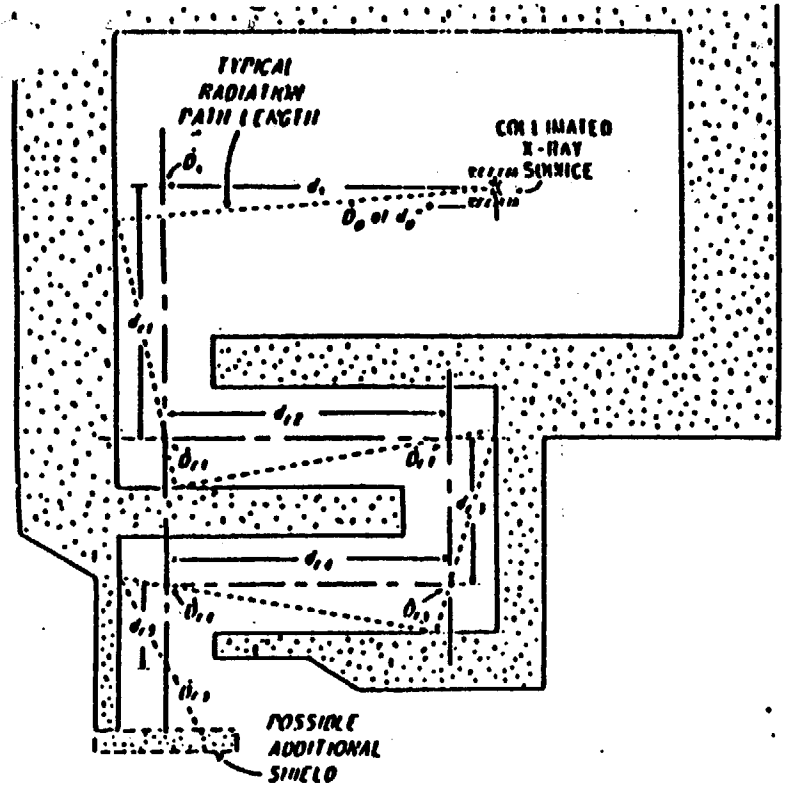

Fig. 6. Generalized maze design. This diagram illustrates successive reflections of x rays from a collimated source, through a maze. These path lengths can be approximated by a sequence of centerline distances, as shown in the diagram. In some instances, path lengths in very short legs can be omitted, e.g. d_{10} or d_{12}.

radiation reflected from shielding barriers or materials in the beam. Depending on the energy and emission rate of x rays incident on the first reflecting material, additional legs to the maze may be required to attenuate the radiation adequately. For economy in construction or space, it may be desirable to place an additional shielding baffle either before the inner aperture or outside the entrance into the maze, for additional attenuation and/or reflection of the radiation (see Figure 6).

For x rays below about 10 MeV in energy, the following calculation method provides a conservative estimate of the dose-equivalent index

$$H_{t,0} = \frac{\dot{H}_0\, \alpha_1\, A_1\, (\alpha_2 A_2)^n}{(d_0 \cdot d_{01} \cdot d_{02} \cdots d_{0i})^2}$$

where

- α_1 is the reflection coefficient for x rays incident on the first reflecting material;
- α_2 is the reflection coefficient for 0.5-MeV x rays reflected from subsequent materials (assumed to be the same for all subsequent reflection processes);
- A_1 is the area struck by x rays incident on the first reflecting material;
- A_2 is the cross-section of the maze (assumed to be approximately constant throughout the maze, with the height/width ratio between 1 and 2);
- $d_{01}, d_{02} \cdots d_{0i}$ are the centerline distances along each maze length, the ratio $d_{0i}/A_2^{1/2}$ should lie between 2 and 6,
- j refers to the jth reflection process.

Mazes for attenuating x rays above about 10 MeV in energy are more complex than described above, because of the necessity for thicker shielding barriers, uncertainties about reflection coefficients, the possibility of photoneutron production, and a significant component of annihilation radiation. Equation (13) is more conservative for incident x rays above 10 MeV. However, protective doors *should* be used at maze exits as an additional precaution, except for low power radiotherapy installations.

In any maze design, the sum of the projected wall thicknesses in the maze, along a line from the x-ray source, *shall* be equivalent to the shielding-barrier thickness that otherwise would have been calculated if a maze had not been required on that wall.

c. *Mazes for neutron sources.* The matter of attenuating neutrons through mazes or ducts is a complex area of shielding technology. Because of this situation, shielded apertures in barriers for neutron-producing accelerators are often overdesigned. Occasionally, however, radiation surveying indicates a need for additional shielding. This uncertainty tends to lead facility designers toward the use of radiation-protective doors, rather than mazes.

Nonetheless, there is an empirical and conservative approach to the design of neutron mazes or large ducts. Reference is made to Maerker and Muckenthaler (1967).

The material of the shielding barriers is assumed to be (or have a reflection coefficient similar to) ordinary concrete. A large proportion

E.15 Reflection Coefficients for Monoenergetic X Rays in Concrete, Iron and Lead

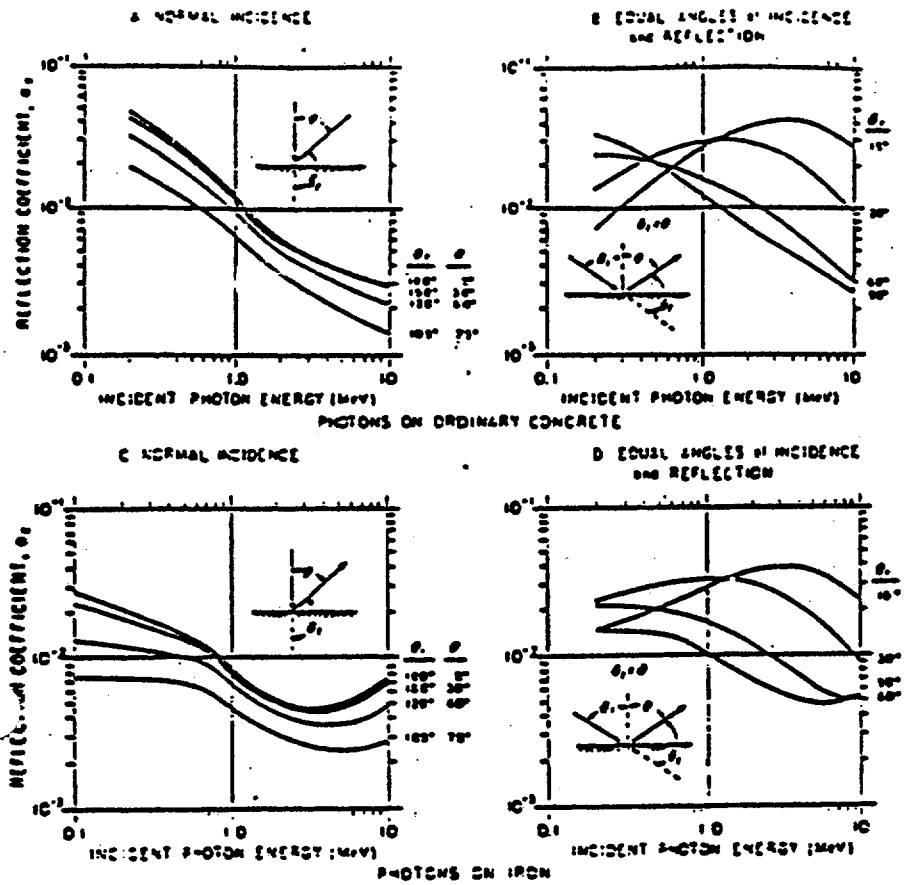

Reflection coefficients, a_s, for monoenergetic x rays on ordinary concrete, iron, and lead as a function of incident monoenergetic photon energy, for several angles of reflection assuming normal incidence and equal angles of incidence and reflection. Values are given for ordinary concrete and iron, based on existing available information, both theoretical and experimental, with particular emphasis on the following references: (1) Chilton and Huddleston (1963); (2) Chilton (1964); (3) Chilton (1965); and (4) Chilton *et al.* (1965). For photon energies higher than 10 MeV, the use of the 10-MeV values of a_s is expected to be safe.

Values of a_s for photons incident on lead are not as readily calculable, but a conservative upper limit is 5×10^{-4} for any energy and scattering angle.

The values of a_s for $\theta_r = 180°$ in Curve A are the same as for $\theta_r = 180°$ in Curve B.

Section No. 7

Design Safety Analysis

The primary goal in the design of this system was to make it as fool-proof as possible from a safety and mechanical standpoint. It was recognized that it is impossible to prevent someone bent on self-destruction from doing so. The following potential emergency conditions were envisioned, and the preventative design features are explained.

Mechanical Conveyor Jams

These conditions do not involve the source, and the only hazard would be destruction of the material through mechanical damage. Any of the following events will cause the source to be lowered to the bottom of the pool, and the conveyors shut off, thereby protecting the product from overexposure:

1. Empty input conveyor.
2. Full output conveyor.
3. Jam at the tote transfer station.
4. Jam at the carrier stop positions.
5. Jam at the maze conveyor.

When any of these events occurs, an alarm will be sounded and the location of the problem will be indicated. The operator will then correct the problem and re-start the system. If the problem cannot be corrected within the preset cycle time, the sources will be lowered into the pool. Otherwise, the sources will remain in the raised position.

Tote Transfer Jams

The most probable conveyor jams will occur when the totes are being loaded and unloaded from the carriers, and when they are being transferred from one level of the carrier to another. Some systems perform these operations within the cell. The RSI system performs these operations outside of the maze where they can be easily monitored and the problems readily corrected if they do occur, since they are not in the radiation environment. Jams of this type, if corrected within the preset cycle time, will not shut the system down. If the jam cannot be cleared within the preset cycle time, the system will be shut down and the sources lowered into the pool.

Radiation Damage

Particular care was taken in the design to keep the amount of materials susceptible to radiation damage out of the radiation cell. Most notably affected are plastics or organics. The only electrical wiring in the cell is for the room lights. This wiring is radiation resistant grade and run through metal conduits to protect it from mechanical damage. The control wiring is also radiation resistant and is shielded from the direct impingement of the gamma rays. RSI systems do not utilize pneumatic cylinders to drive the conveyor within the cell nor use exposed electrical wiring which is susceptible to radiation damage and failure. RSI cell maintenance is minimal.

Power Failure

The source rack lifting mechanisms have been designed to lower the source racks in a controlled manner to the bottom of the pool in the event of a power failure. An Uninterruptable Power Supply (UPS) is included which will provide for an orderly shutdown and approximately six hours of critical supervisory control.

Source Rack Jam

The most serious mechanical problem in the system would occur if the source rack and the carriers or totes interacted to cause the rack to be jammed while in the up position. Where most systems utilize a rack-to-carrier spacing of 2" to 3", RSI maintains a 12" separation to minimize the possibility of this occurrence. Source rack cable guides are run through the roof and tensioned above. This design permits tension in these cables to be relieved in the unlikely event that a rack jam does occur, thereby increasing the chances of dislodging and freeing the jam. Rods may also be run down the cable guide openings in the roof to assist in freeing the rack if necessary.

To further assure that the product carrier does not contact the source racks, a metal protective cage is built around each source rack. The conveyor drive cannot overdrive in the event of a jam because of a built-in jam detector. The drive is also reversible which allows jamming pressures to be relieved.

Extra holes through the roof above the source racks have been included in the design. They are normally shielded against streaming radiation, but can be used for inserting heavy metal rods to drive the sources into the pool in the event of a source rack jam condition.

Source Carry Out

Provisions have been made to prevent the improbable event of a source being carried out by the carrier from the cell to the loading area. In order for this event to occur, the following must happen: The source must be dislodged from the source module contained in the source rack, bridge the 12" separation to the carriers, and attach itself to the carrier which presents a relatively smooth surface to the sources. However, if this does happen, it will be detected by the radiation monitor located in the middle of the maze which will stop the conveyor and lower the source rack to the bottom of the pool. All personnel will be excluded from the maze, and the RSO will take full charge to formulate the steps necessary for the safe removal of the source of radiation.

Source Break in the Pool

If a cobalt source ruptures due to any reason, the cobalt pellets would fall into the pool. Some corrosion product radioactivity might be released to the pool water which would be detected by monitoring at the water treatment area and through pool water samples. De-ionizing columns would be used to remove the soluble contaminants from the pool water. The cobalt pellets could be removed with magnets or suction devices under the direction of the RSO and the source vendor. These would be loaded into a cask and returned to the vendor for further processing or disposal.

Leak in Storage Pool

Several design precautions were taken to prevent catastrophic loss of the water in the storage pool. A 1/8" stainless steel liner is the primary containment for the pool water. It was selected because it is non-corrosive, will not dissolve, will not crack, and can withstand the mechanical abuse of resting a lead cask on it. An additional 1/2" stainless steel plate covers the bottom where the cask normally would be placed. Cement and tile tanks will leach and crack more readily. Beyond the stainless steel tank, there is about 16" of reinforced concrete.

Design Safety Analysis

The whole pool structure is structurally isolated from the rest of the cell to minimize any problems due to differential settlement. A makeup water line services the pool which should be able to overcome losses due to any possible leaks. The pool is also equipped with a 4" overflow to prevent flooding of the cell. To minimize maintenance on the electrical level control, a sump tank, connected hydraulically to the pool, has been installed externally to the cell for monitoring the pool level.

Maze Design

The maze has been designed to provide a minimum of three radiation scatterings prior to leaving the maze. Normally three scatterings will be sufficient to reduce radiation levels to safe limits.

Building Design

Based upon previous experience, RSI has opted to purchase land and construct the facility to optimize material flow and structural integrity of the building. Modification of existing buildings was deemed less than optimal especially from a structural standpoint. Deep soil borings were made to assist in the design of the building foundations and the construction of the pool.

Seismic Design

The Decatur area is rated as a seismic zone #1 area, and all structural design was based upon the local requirements. Zone #1 areas have minimal seismic requirements.

Fire Control

Smoking will not be permitted in the warehouse area. The building is equipped in all areas, including the gamma cell, with sprinkler systems. The gamma cell is constructed of non-flammable steel and concrete. Smoke detectors will signal the sources to be lowered and the conveyors to be stopped. A high temperature detector within the cell will also shut the system down. Both signals will also shut off the ventilation system to help smother the fire.

Section No. 7
Design Safety Analysis

Shielding Design

The shielding will be a steel reinforced concrete structure with a maze entrance for the conveyor and a roof access for isotope loading. The roof access will be shielded with a stepped concrete plug.

Personnel Protection

The greatest potential hazard to this type of operation is the accidental exposure of personnel to radiation. RSI therefore has installed multiple independent monitors in the entrance to the maze, which is the only access to the radiation cell.

The mouth of the maze is monitored by a photocell which will shut the system down when it is violated. Passage of the product carriers into and out of the maze is permitted by the programmable controller which ignores the photocell signal whenever a carrier interrupts the beam.

In the improbable event that a person accidentally enters the cell with a product carrier, when the photocell signal is being ignored, there are two (2) independent pressure mats which span the width of the entry maze to provide additional security. Trip of either of these mats will shut the system down.

Additional security is provided by sliding doors which open and close on signal from the programmable controller whenever carriers enter or leave the maze.

During periods when the facility is not in use, the maze opening is locked to prevent access to the radiation cell.

Since RSI facilities have only one cell entry, security is maintained at all times as compared to systems that have both a personnel and a product access, where only the personnel access may be monitored.

Locking Person in Cell or Maze

Regulations require that any security system be designed to permit personnel egress from the cell or maze at all times during operation of the facility. A separate door which may only be opened from the inside will permit exit from the maze area at all times.

Entry to Cell Through the Vent

Unauthorized entry through the vent ducts is prevented by a steel grill cast into the vent openings at the roof level.

Ventilation System

The ventilation system is provided with a filter system which will prevent the escape of any possible contamination from the cell. It also is equipped with a standby blower which, in the event that the primary blower fails, the cell environment will be maintained. These blowers are interlocked to the fire alarm system such that they will be turned off in the event of a fire signal.

Fire in Cell

The cell is equipped with a sprinkler system in the event there is a fire in the cell. The vent is monitored by a smoke and temperature detector and if either is activated, the source will be lowered, the conveyor stopped, and the ventilation fans turned off.

Section No. 6

Source Control System

The basic Co-60 source element in this system is typified by the AECL C-166 source rod as shown on the accompanying drawing. Other Co-60 source elements may also be used as manufactured by G.E., Neutron Products, or other approved encapsulators. Each element will be permanently identified with a serial number and its location in the system will be controlled at all times.

Upon receipt at the facility, the cobalt-60 sources are placed into one of the source modules. These modules are permanently identified and contain the sources in a flat array. From this moment on, the sources will not be removed from the module, and the basic inventory control will be at the module level. Control and records will therefore be reduced considerably when compared to individual source control systems.

Individual sources are traceable through module loading records, a copy of which is attached. The source position is equivalent to the loading order of the sources into the module. As modules are shifted within the source racks, their new locations are noted on the source control sheet.

The source modules are loaded into hinged modules within the source racks. The RSI system utilizes four source racks with each rack containing approximately 63 hinged modules. Each module is designed to be individually hinged for loading.

When the larger cesium capsules are used, they are loaded directly into the hinged modules in the source rack.

All isotope loading will be controlled by, or under the supervision of, the RSO or an authorized user of the isotope. The following procedure will be generally followed:

1. Source casks should be delivered to the facility on an open topped vehicle in casks similar to AECL F-168 or G.E. series 1500. Survey the cask for excessive leakage.

2. Check paperwork to assure that it is in agreement with the purchase order.

3. Perform leak test on the cask by running water through the cavity and monitoring the water. If activity is detected, notify the vendor and re-seal the cask. If no activity is detected, proceed.

4. Leave vent and drain plugs off to allow the cavity to fill as the cask is lowered into the pool. Retain the plugs for installing after the sources have been removed.

5. Remove the heat shield, and other protective coverings.

6. Unbolt cask from shipping skid.

7. Loosen, but do not remove, cover bolts.

8. Attach cable for cover removal.

9. Attach the cask sling.

10. Remove the roof plug with the mobile crane rented for the loading operation and place on the roof over one of the shielding walls.

11. Lift the cask with the crane from the truck and lower it slowly through the roof access into the pool in the floor of the gamma cell.

12. Avoid the upper cask vent since steam may be generated and ejected from this opening as the cask is lowered into the pool water.

13. When the cover is 6" above the water level, remove the cover bolts.

14. Continue to lower cask slowly to the bottom of the pool.

15. Unhook the cask sling from the hoist.

16. Remove cover and check for contamination as it clears the water.

17. Place cover on the roof and remove the sling from the crane hoist.

18. Using a long handled, vented tool, remove the source cage from the cask and place it on the floor of the pool. Monitor radiation levels at the pool surface.

19. Re-attach the cask lifting sling.

20. Slowly raise cask.

21. Check cask for contamination as it clears the water.

22. Re-insert drain plug as the bottom clears the water.

23. Place cask on skid and bolt down.

24. Remove drain plug and drain into bucket. Check water.

25. Replace cover and bolt down.

26. Insert top and bottom plugs.

27. Replace fire shield and bolt down.

28. Load modules with sources after checking the serial numbers. Load modules into source racks.

29. Document loading on source control sheets.

30. Repeat steps 1-30 for each cask.

31. Remove source cages; check for contamination.

32. Box cages for shipment.

33. Remove all radioactive materials labels from the casks.

34. Cover caution tags on casks with shipping labels for return shipment.

35. Replace roof plug.

36. Run survey around facility with sources in the operating position.

37. Take sample of pool water for leak testing.

After some period of time, the source rack will be filled to capacity with source elements. In order to maintain operating levels, the most decayed elements will have to be replaced by high activity elements. The decayed source elements will be returned to the vendor for disposal.

Source Control System

The position of the source racks is controlled by microswitches which accurately control the up and down locations.

In the event of a power failure, a brake automatically locks the racks in place. The sources will be lowered to the bottom of the storage pool using an auxiliary power supply after the brake has been released.

Source Control Procedure

Source control will be maintained at all times on each source element. Data will be kept on the source control sheets.

The source position in each module will be the same as the loading sequence, i.e., the first element loaded into a module will be noted in position one; the second in position two; and so on to position ten which is the capacity of the module.

Modules will be filled and loaded as required. Module positions are identified from one to one hundred thirty six; there being 34 module positions in each source rack.

The source racks will be designed from 1 to 4 corresponding to their location in the pool.

Each source rack contains 34 hinged modules to hold the sources. These will be numbered sequentially 1 through 34 in source rack No. 1. Rack No. 2 will be numbered 35 through 68; Rack No. 3, 69 through 102; and Rack No. 4, 103 through 136.

Once the modules are loaded, there is no need to unload them.

Section No. 12

Emergency Procedures

General

The safety system has been designed to automatically lower the source to the bottom of the storage pool and to stop the conveyor if any of the following detectors is activated:

1. Emergency cable in cell.
2. Emergency button at the console.
3. Maze pressure mats.
4. Maze photocell.
5. Smoke or fire alarm.
6. Conveyor jam.
7. Low water level.
8. Cell ion chamber.
9. Maze ion chamber.

If the safety system is violated, the cause will be displayed at the control station. The shift supervisor will make a preliminary investigation to determine the cause. An operable survey meter will be carried at all times when entering the cell. If, after a thorough check of the system, there is nothing obviously wrong or the problem was found and corrected, the system can be re-started.

If the safety system still shows a violation, the shift supervisor should stop operations and notify the RSO or his alternate. A current call list will be posted at all times in the control room, indicating the call sequence.

Suspected Radiation Incident

Any indication of radiation leakage at the entrance to the maze after the system has been shut down should be treated as a suspected radiation incident and the following action taken:

1. Confirm the presence of radiation with a second operable survey meter and note levels.
2. Make no attempt to enter the cell.
3. Notify the RSO of the incident.
4. Close and lock the doors at the entrance to the maze.
5. Shut off ventilation fans and water circulation pumps.

Attachment
Application for Radioactive Material License
Reference U.S.N.R.C. Regulatory Guide 10.9
Item No. 13c

The RSI facility utilizes standard power and free conveyor components to transport product through the gamma cell. This system utilizes a zero pressure accumulation system within the cell. Three-tiered carriers are used to transport the product through the cell.

Each tote is loaded onto the bottom shelf and traverses the cell. Upon leaving the maze, the totes are automatically elevated to the second shelf and traverse the cell a second time. Upon leaving the maze, the totes are automatically elevated to the top shelf for a third pass through the cell, after which they are transferred off the carrier to a conveyor belt which transports them to the finished goods area.

There is no transfer of material within the gamma cell. All transfers from shelf to shelf are accomplished external to the maze where they are readily monitored. This feature adds significantly to system reliability since the major problem area in these systems is in the tote transfers. Most other systems attempt to make these transfers within the cell where any jam will result in a system shutdown before corrective action can be taken.

When using cobalt-60, source elements are loaded into standard modules, which hold 10 elements in a flat array. From this point on, source inventory will be at the module level thereby reducing accounting by a factor of ten.

When cesium-137 sources are used, they are loaded directly into the rack because of their much larger physical size.

The source modules, rack, and all associated cables will be stainless steel. The main rack cables will be prestretched to minimize positioning errors with time.

The electric winches position the racks using built-in limit switches. They are designed to lower the sources by gravity whenever there is a power failure.

The major electrical control is accomplished using a programmable sequencer. Detection devices include photocells, limit switches, and proximity sensors.

Section No. 12

Emergency Procedures

General

The safety system has been designed to automatically lower the source to the bottom of the storage pool and to stop the conveyor if any of the following detectors is activated:

1. Emergency cable in cell.
2. Emergency button at the console.
3. Maze pressure mats.
4. Maze photocell.
5. Smoke or fire alarm.
6. Conveyor jam.
7. Low water level.
8. Cell ion chamber.
9. Maze ion chamber.

If the safety system is violated, the cause will be displayed at the control station. The shift supervisor will make a preliminary investigation to determine the cause. An operable survey meter will be carried at all times when entering the cell. If, after a thorough check of the system, there is nothing obviously wrong or the problem was found and corrected, the system can be re-started.

If the safety system still shows a violation, the shift supervisor should stop operations and notify the RSO or his alternate. A current call list will be posted at all times in the control room, indicating the call sequence.

Suspected Radiation Incident

Any indication of radiation leakage at the entrance to the maze after the system has been shut down should be treated as a suspected radiation incident and the following action taken:

1. Confirm the presence of radiation with a second operable survey meter and note levels.
2. Make no attempt to enter the cell.
3. Notify the RSO of the incident.
4. Close and lock the doors at the entrance to the maze.
5. Shut off ventilation fans and water circulation pumps.

M. Appendix Section 15, Water Treatment System:

1. How will pool leaks be detected?

2. What mechanisms are employed to detect and prevent back siphonage of water from the pool?

3. Who collects the pool water samples, what are their procedures including calculations? Be sure to include in the procedures what steps are taken to assure the sample is representative of all the water in the pool.

4. If Helgeson performs the analysis on the pool water, what is their license number?

5. Regarding the pool filter: what method is used to determine when filters are to be changed; what action level warrants changing filters; and what are the procedures in removing and disposing of contaminated filters?

6. When are the de-ionizer beds regenerated and how are they serviced?

7. What is the discharge point for overflow pool water that leaves the cell via the floor drain?

N. Appendix Section 16, Ventilation System:

1. Provide additional information describing the "periodic checks" of the HEPA filters, action level, etc.

If you should have any questions or if we may be of assistance, please do not hesitate to contact us.

Sincerely,

Thomas E. Hill
Environmental Radiation Specialist, Sr.
Radioactive Materials Unit
Radiological Health Section

TEH/ck

188

cc: Richard Woodruff

H. Appendix Section 5, Biological Shielding Calculation:

1. Provide calculations showing what the pool surface gamma rates will be under normal stored conditions.

I. Appendix Section 7, Design Safety Analysis:

1. How long are the two independent pressure mats that span the width of the entry maze and is this length sufficient to prevent someone from stepping over them?

2. How are the sliding doors interlocked?

3. Is the emergency/exit door interlocked and can it be left in an open position?

4. Is there an alarm system actuated, if any of the interlocks are violated by a person attempting to enter the cell, if the sources are not completely shielded?

J. Appendix Section 8, Source Control System:

1. Provide the name and license number of the organization performing the leak test analysis on the shipping cask. If RSI performs the leak test provide your procedures for performing the leak test analysis and a description of the instrumentation used.

2. Provide a description of the tools used and the step-by-step procedures for loading the sources into the source modules and source racks.

K. Appendix Section 11, Radiation Safety Maintenance Program:

1. In the application it is not clear how the radiation area monitors will be checked after they have been installed. The "safety system:" checkout list a "cell ion chamber" and a "maze ion chamber" as items to be checked on a monthly basis. Please clarify.

2. Georgia does not recognize 0.05 uCi of activity per source as an acceptable limit for determination of leakage from sealed sources. Confirm that the limit of 0.005 uCi of activity per source will be the basis for determining leakage from the sources.

L. Appendix Section 12, Emergency Procedures:

1. Describe your procedures for emergency preparedness in dealing with various types of accidents that affect or threaten the health and safety of the public, your employees or others visiting or working at your facility. These procedures should also address: the use or irridation of combustible materials inside the cell; contamination that could result from an emergency; and procedures to return the facility to a safe condition.

C. Application Item, 5.A. Attachment:

1. A statement is made that the sources are raised and lowered into the pool by electric winches located on the roof. However, in the attachment reference U.S. N.R.C. Guide 10.9 item no. 13d the statement is made that the source racks are designed to lower by gravity whenever there is a power failure, and in attachment, reference U.S. N.R.C. Guide 10.9 item 13f and in Appendix Section 1 it is stated than an auxilliary power supply lowers the sources into the pool in the event of a power failure. Please explain.

D. Application Item 6. Health Physics Instrumentation:

1. It is not clear from the information provided in the application that the Xetex Model 305A will operate without blanking out in high radiation fields. Provide the specifications for this instrument (type, energy, range, etc.)

2. If Xetex Incorporated has been approved by the NRC or an agreement state for the calibration of survey instruments provide substantiating documentation.

E. Application Item 7, General Instrumentation:

1. What are the exact locations of the area radiation monitor detectors? Confirm that these radiation area detector are the Xetex, Inc. Model 501A and provide the specifications for the instrument systems.

2. Please provide a diagram showing the locations of operating console, detectors, readouts, and warning signals.

F. Application Item 9, Area Monitoring:

1. Are the daily radiation area surveys performed at least once each day, or more appropriately at least once each shift? Describe the documentation of these surveys.

G. Appendix Section 3, Gamma Cell Safety System:

1. How and by whom are duplicate master keys controlled and who has a key during any one shift?

2. It's not clear from the application if the entry doors and pressure mats are sufficient to keep personnel from entering during operation. Also, how is the entry way interlocked? Please describe in greater detail.

3. What is the pre-set cycle time for correcting malfunctions of the conveyor system?

B. Application Item 6. Radiation Protection Personnel:

1. Who is the full-time Radiation Safety Officer for the Decatur facility? Please, submit his qualifications.

2. In Attachment, Application for Radioactive Material License, References U.S. N.R.C. Regulatory Guide 10.9 Item 15.C. the statement is made that the corporate RSO will perform annual audits to assure compliance to all procedures and regulations. With the exception of that statement, the duties of the facility RSO and the corporate RSO are not clear. Provide the specific duties and responsibilities for the facility RSO and the corporate RSO, including those duties and responsibilities each RSO may delegate to persons acting on his behalf.

3. Provide the names of the persons who will be authorized to load the sources into the source racks. Provide their training and experience or documentation showing they have been approved under another RSI facility license..

4. Additional information is needed on the training program for the shift supervisors (independent-user), material handlers and other ancillary or housekeeping personnel.

   The minimum level of training (Basic training/Orientation, intermediate, advanced, and retraining) should be designated for each of these workers. The number of hours of formal training should be identified for each subject in the training courses. Provide copies of required test and specify the minimum passing score you will accept. Will you re-instruct employees as to any incorrectly answered questions?

5. What is the minimum on-the-job-training required before being certified as an independent-user? Distinguish between shift supervisor and independent user and licensed user.

6. Who will maintain records of training, including, status of trained personnel, refresher and/or upgrade training?

7. What are the titles of the series of booklets published by the USNRC on radiation, radiosotopes, and applications referenced in Section 9 of the Appendix to the application?

8. Specify which key management personnel will be required to have a sound background in radiation safety.

9. What is the line of authority and responsibility for overall facility operation during normal and emergency operations?

10. How will you address the Georgia Rules and Regulations for Radioactive Material, Chapter 290-5-23-.07 in your orientation/training program. Please provide an outline of this training?

June 19, 1984

Allan Chin, President
Radiation Sterilizers, Inc.
3000 Sand Hill Road #2-190
Menlo Park, California 94025

Dear Mr. Chin:

An initial review of your application for the use of radioactive material in a sterilization facility to be located at 2300 Mellon Court, Decatur, Georgia has been completed. This review reveals that additional information is needed. Also, the review was performed without benefit of the ANSI N43.10-1984 standard "Safe Design and Use of Panoramic, Wet Source Storage Gamma Irridiators (Category IV)." However, this standard will be used in additional review of the initial application and all subsequent submittals.

Inasmuch as we do not have documentation demonstrating that the Cobalt 60 sources and the Cesium 137 sources, manufactured by N.P.I. and U. S. D.O.E. respectively, have been approved, these sources will not be considered for licensure for use at the Decatur facility. However, if either of these sources have been approved, please provide us with the name of the agency who evaluated and approved the sources.

Please provide additional information and/or clarifications to the following so review of your application may continue:

A. General:

1. References should be to Georgia Rules and Regulations and forms and not to those of the N.R.C.

2. Since it is not specifically stated in the application, what areas do you consider to be restricted areas in and around the facility?

3. Does RSI maintain control over all entrances, and is the roof area secured? Describe.

4. During a visit to the construction site on June 6, 1984, I was informed, during a conversation with the the Construction Superintendent, that additional concrete and stone was added to the bottom of the excavation for the storage pool. It is my understanding that the material was added because of some "unstable formation" encountered during excavation. Please provide an explanation of what was encountered, the actions taken and an evaluation of the effectiveness of the action in overcoming the instability.

Tom Fisher, General Manager + R.S.O.

Note to John Hickey and Randy Miller

Today I received a telephone call from Don Anderson, Ph.D., State of Texas. (I have known Don for several years) He informed me of a potential hazard associated with some large irradiators in Texas. While inspecting one of these irradiators in Sherman, Texas (AECL type) he found that the electronic circuit control board was located on top of the irradiator and outside the facility. This circuit board was readily accessible to anyone by means of a ladder. Don demonstrated to an AECL engineer that it was very easy, by means of wires and alligator clips, to expose the source in the irradiator without entering the building.

I think the above is a significant potential hazard and merits our immediate attention. (Don will send us a report of his findings in the near future) I suggest that we call each of our irradiator licensees and inform them of the potential hazard discovered by Don Anderson. Don says that anyone with a limited knowledge of electronics could expose the source without the knowledge of persons inside the building. (In most cases I am sure a radiation alarm would sound but some significant exposures could still occur.)

We should urge our irradiator licensees to take immediate action to secure electronic circuit controls so that a disgruntled employee or any other individual would not be able to gain access to them.

Paul R. Guinn

TO: Regional State Agreements Officers
SA Staff

FROM: Donald A. Nussbaumer
Assistant Director for
State Agreements Program
Office of State Programs

SUBJECT: POTENTIAL DESIGN HAZARD IN LARGE IRRADIATORS

Attached is a copy of an NRC staff report on a potential design hazard associated with large irradiators. We do not know how widespread or significant the problem is and will keep you advised.

Donald A. Nussbaumer
Assistant Director for
State Agreements Program
Office of State Programs

Enclosure:
As stated

I. Appendix Section 7, Design Safety Analysis

1. Are the pressure pads designed (long enough) to prevent a person from stepping over them to gain entry with product carriers.

2. How are the sliding doors interlocked?

3. Is the emergency exit door interlocked and can it be left in an open position?

J. Appendix Section 11, Radiation Safety Maintenance Programs

1. It is not clear how the area monitors will be checked after they have been installed. The "safety system" checkout on an monthly basis lists a "cell ion chamber" and a "maze ion chamber" as items to be checked on a monthly basis.

K. Appendix Section 12, Emergency Procedures

1. The emergency procedures do not address returning the facility to a safe condition.

2. The emergency procedures need clarification in that they pre-suppose that no contamination could occur.

3. Procedures should also address the use or irradiation of combustible materials inside the cell.

L. Appendix Section 15, Water Treatment System

1. How will pool leaks be detected?

2. It is not clear who collects the pool water samples, their procedures and calculations. If Helgeson performs analysis, what is the license number?

3. The pool filter should have survey procedures or a monitor and action levels should be established. It is not clear when the filters are changed or their disposal procedures.

4. When are the de-ionizer beds regenerated and how are they serviced?

M. Appendix Section 16, Ventilation System

1. Additional information needed to describe "periodic checks" performed of the HEPA filters, action levels, etc.

C. Application Item 5.A, Sealed Sources

1. Cesium-137 sources (soluble chloride) have not been approved for this use at present.

2. Food product irradiation has been approved by FDA; however, a license condition is suggested as shown on the enclosed sample licenses (Enclosure 2).

3. Who has approved the OPRP model 450-14-C cobalt-60 sources?

D. Application Item 6, Health Physics Instrumentation

1. It is not clear from the information provided in the application that Xetex model 305 A will operate without blanking out in high radiation fields.

E. Application Item 7, General Instrumentation

1. The exact location of the area radiation monitor detectors need to be confirmed along with the make, model and range of the instrument systems.

2. A diagram showing locations of operating console, detectors, readouts, and warning signals would also be helpful.

3. The application lists the area monitors as being Xetex models 501 A. Specifications for this model are needed (type, energy, range, etc.).

F. Application Item 9, Area Monitoring

1. Walk-through surveys should be performed during each "shift" and recorded.

G. Appendix Section 3, Gamma Cell Safety System

1. How are the duplicate master keys controlled by the facility manager and who has a key during any one shift?

2. It is not clear from the application if the entry doors and pressure pads are sufficient to keep personnel from entry during operation and how the entry way is interlocked.

H. Appendix Section 5, Biological Shielding Calculations

1. Calculations are needed to determine what the pool surface gamma exposure rates will be under normal stored conditions.

Enclosure 1

TECHNICAL COMMENTS ON APPLICATION FROM RADIATION STERILIZERS, INC. (RSI)
FOR IRRADIATOR FACILITY AT DECATUR, GEORGIA

The following comments were developed after reviewing the application dated March 19, 1984 and associated attachments. Where possible the comments or questions will be referenced to specific application items or section number of the application appendices.

A. General

1. The application is not clear as to what areas the applicant considers to be restricted areas, in and around the facility.

2. Does the applicant maintain control over all entrances and is the roof area secured?

3. At least three times the applicant referenced NRC forms or regulations instead of the appropriate Georgia form or code section.

B. Application Item 4, Radiation Program Personnel

1. The Radiation Safety Officer for the Georgia facility should be designated and that person's qualifications (radiation safety) submitted for review. A full-time resident RSO should be required for the Georgia facility.

2. What functions does the corporate RSO perform and are facility audits performed on an established frequency? Also, it is not clear what the RSO can designate to other persons acting on his behalf.

3. Persons authorized to load sources into source racks should be listed on the license. These persons must either be approved under another RSI licensed facility or their training and experience be evaluated by Georgia. The loading of the sources is unique to the RSI systems.

4. Additional information is needed on the training program for the shift supervisors, material handlers and other accillary or housekeeping personnel. The minimum level of training (Basic training/orientation, intermediate, retraining, advanced) should be designated for each of the above workers and the number of hours of formal training identified for each subject in the training courses and copies of required tests should be evaluated along with the minimum passing scores that management will accept. Also, will licensee re-instruct any wrong answers?

5. It is not clear what is meant by the "Series of booklets published by USAEC on Radiation, radioisotope, and application" referenced for training course texts in Section 9 of the applicants procedures.

173184

Mr. Tom Hill
Radioactive Materials Unit
Radiological Health Section
1256 Briarcliff Road, Rm. 425 South
Atlanta, Georgia 30306

Dear Mr. Hill:

SUBJECT: REVIEW OF RADIATION STERILIZERS, INC. APPLICATION FOR IRRADIATOR LICENSE

Thank you for the opportunity to review the application for a Georgia licensed irradiator facility. The application was also reviewed by our Region II materials licensing staff and the Office of State Programs. I have summarized our comments in Enclosure 1.

The facility should be reviewed in accordance with the criteria provided in the ANSI N43.10-1984 standard "Safe Design and Use of Panoramic, Wet Source Storage Gamma Irradiators (Category IV)."

I have also included for your information copies of an NRC licensed irradiator and a memo on "Potential Design Hazard in Large Irradiators." Should you have any questions regarding these enclosures, please do not hesitate to call.

Also, I would like to confirm your invitation to accompany you during a visit to the RSI facility during the construction phase or during a pre-license inspection.

Sincerely,

Richard L. Woodruff
Agreement State Representative

Enclosures:
1. Technical Comments
2. Isomedix License No. 29-19769-01
3. Memo - Potential Design Hazard In Large Irradiators

Item 15 Change to read:

This license does not authorize repairs or alterations of the irradiator or facility involving removal of shielding or access to the licensed material except as provided otherwise by specific condition of this license. Removal, replacement and disposal of sealed sources containing licensed material shall be performed only by those designated by the licensee and specifically authorized by the Commission or an Agreement State to perform such services. The licensee may is authorized to install the sealed sources in accordance with the procedures described in Section 8 of the licensee's application dated January 21, 1982, with a minimum of two authorized users.

Reason: RSI does not use ALCL equipment and therefore their personnel are not trained or qualified to install sources into RSI facilities.

I am requesting that you process this amendment request on an expedited basis, since we are currently preparing to modify these facilities to operate with the larger WESF cesium-137 capsules. Please do not hesitate to call me if you need additional information.

Thank you for your cooperation.

Sincerely,

Allan Chin

Allan Chin
President

AC:ck

Enclosure ($110 check, amendment fee)

cc: Barry Fairand, RSI Westerville
Thomas Hurley, RSI Schaumburg

Ck returned with application

17341

9. Capsules may be loaded into the source rack in a controlled manner to minimize heating effects.

10. The pool water will be monitored to detect any increase in activity. In the event of a source leak, the cesium in the water would be removed with shielded deionization columns. The leaky source would be identified by wipe testing each capsule, and removed. The carriers and totes will be measured for contamination and decontaminated, if necessary. Any airborne contamination would be collected on the HEPA filters located in the exhaust vents.

11. Materials capability tests between the cesium salts and the 316L encapsulation showed that there is no interaction between these materials.

12. Water coolers will be added to remove the increased heat load caused by the cesium when the heat load warrants it.

Item 8A Present limits to apply to NPRP-xxxx-xx-x sources.

Add: 30,000,000 curies of cesium. Each source not to exceed 150,000 curies.

Item 8B Same as Item 8A.

Approximately 5Ci of cesium-137 in the form of WESF capsules will be equivalent to 1Ci of cobalt-60. The additional isotope required in excess of the theoretical is for self-absorption of the WESF capsule.

Item 12B Change second sentence to include Barry Fairand.

Barry Fairand has been given on-the-job training during two cobalt source loadings, and has demonstrated the capability of manipulating and loading sources.

1. The capsules, as shown in the referenced docket above, are capable of withstanding tests far more severe than those specified in Annex 4 of ERDA Appendix 0529 or ANSI 542.

2. Each encapsulation is 0.136" thick with a 0.400" thick end cap. Cobalt source encapsulations are 0.02" to 0.03" thick with 0.165" end caps. AECL, the leading supplier of cobalt, has provided over 10,000 of these sources without a reported leak over 20-25 years. There have been reported source failures caused by mechanical abuse.

3. Each encapsulation (2) is helium leak checked.

4. Thermal cycling temperatures are below the β-transition temperature of the cesium chloride, and well within the fatigue capabilities of 316L stainless steel.

5. Thermal cycling of the sources is not expected to average more than once daily throughout its life.

6. RSI utilizes very high ventilation rates through the cell which will keep the source temperatures lower. Maximum calculated surface temperatures of the WESF capsules is 200 degrees centigrade. Actual measurements by DOE show that the temperature is in the 100 to 125 degrees centigrade range. Through decay, the surface temperatures will reduce with time thereby decreasing thermal cycling concerns.

7. Solubility tests on the fused salt have been reported by J. H. Gillette of ORNL to be very low through 1/8" diameter holes drilled through the two encapsulations.

8. RSI systems are designed with 24" of free space for the source rack. We anticipate our 2" cobalt rack to be replaced by a 5" cesium/cobalt rack. There will be a 9" to 10" clearance between the source rack and the product carriers. A metal cage will be constructed in this space to prevent interaction between the source rack and the product carriers. The cages will permit cooling air to circulate by the sources.

RADIATION
STERILIZERS
INCORPORATED

Assignment.....
Check No. 5430
Amount/Fee Rec. $74.00
Type of Fee. Amendment
Date Check Rec'd. 4/16/84
Received By

FEDERAL EXPRESS

April 3, 1984

'84 APR -4 A10:51

RECEIVED BY FMD
Date 4/12/84
Log March II
By Brown
Orig. To
Action Compl. 4/16/84
call for check 4/16/84

Mr. Joseph C. Wang
U.S.N.R.C.
Willste Building
7915 Eastern Ave.
Silver Spring, MD 20910

Reference: License 04-19644-01

Dear Joe:

This letter requests that the above referenced license be amended as follows:

Item 2 Address should read "3000 Sand Hill Road #2-190".

Item 6A Add "Cesium-137".

Item 6B Add "Cesium-137".

Item 7A Add "Sealed sources (NPI model NPRP-xxxx-xx-x)".

Item 7B Add "Sealed sources (NPI model NPRP-xxxx-xx-x)".

Reference source and device catalog #MD47451085 Maryland Department of Health and Mental Hygiene. These are cobalt-60 sources where "xxxx" signifies the source length in millimeters and is less than 1370 and greater than 100, "xx" signifies the nominal diameter in millimeters and is less than 40 and greater than 6 and the last "x" represents one or more letters designating the end cap configuration.

Item 7A Add "Sealed source (U.S.D.O.E. WESF capsule)".

Item 7B Add "Sealed source (U.S.D.O.E. WESF capsule)".

Reference U.S.D.O.E. data submission under Docket #83-106 to U.S.N.R.C.

173

The following factors were considered in our safety analysis prior to submitting this amendment:

17341

9. Facilities and equipment
   a. Pool facility design and construction
      1. Radiation levels
      2. Entry points
      3. Systems to meet requirements of 20.703(c)(6)
      4. Systems secured against unauthorized access
   b. Other safety considerations
      1. Waste storage pool construction
      2. Watertight pool
      3. Permanent pool components corrosion
      4. Replenishment of pool water
      5. Pool water conductivity
      6. Pool water monitors
      7. Ventilation system
      8. Heat and smoke sensing devices
      9. Automatic fire extinguishing system
      10. Penetration of pool by pipes and holes
      11. Water migration into municipal water supply
      12. Interference of source holder by totes and packages
   c. Radiation detection instruments and calibration
   d. Personnel monitoring equipment
10. Radiation protection program
   A. Commitment for operating and emergency procedures
      1. Use of personnel monitoring equipment
      2. Irradiator startup and shutdown
      3. Performance of radiation surveys
      4. Emergencies
      5. Notification of responsible individual
      6. Associated operations
   b. Hospital arrangements
   c. Presence of a responsible individual
   d. Leak testing
11. Waste management

9. Facilities and equipment
   a. Irradiator location
   b. Radiation detection instruments and calibration
   c. Personnel monitoring equipment
10. Radiation safety program
   a. Commitment for operation and emergency procedures
      1. Irradiator operation
      2. Radiation surveys
      3. Use of personnel monitoring
      4. Locked room for unattended irradiator
      5. Emergencies
   b. Leak testing
11. Waste management

OTHER IRRADIATORS

1. Type of application New
2. Name and address of applicant [illegible]
3. Place of use 2360 Mallard Creek Drive.
4. Name of contact concerning the application [illegible]
5. Material to be possessed
   a. Isotope Co 60 and/or Cs 137
   b. Manufacturer and model number of sealed sources [illegible]
   c. Total quantity to be possessed 5 [illegible] in Co 60 or [illegible]
   d. Quantity in any single source 12,000 Curies Co 60 or 7,000 Curies Co 60
6. Purpose for which material will be used Sterilize Single-use Medical
7. Individual(s) responsible for program
   a. Name(s) Chin, Moyer, Lloby, Fleming
   b. Training and experience of named individuals(s) ✓
8. Training provided to other users
   a. Formal training
   b. On-the-job training
   c. Examination

?

[illegible] APPLICATION CHKL

$$C_{(t_0)} = C_{turnoff}\, e^{-(t_0/\tau)} \qquad \text{(formula 6)}$$

The table below gives the saturation concentration and the tenth value time for ventilation rates of 1, 250, 2500, 5000 and 10000 CFM. A room volume of 20000 CF or 5.6×10^5 liters is assumed. The decay curves for reduction in ozone concentration are plotted in figure AC-1.

Flow Rate (CFM)	τ_{vent} (min)	10MCI saturation activity ppm	$\tau^{1/10}$ (min)
1,250	16	59.2	36.6
2,500	8	29.6	18.3
5,000	4	14.8	9.2
10,000	2	7.4	4.6

Figure AC-1 shows the reduction of ozone with time for the four different flow rates. Reduction of ozone concentration will be governed by the exhaust rate, and actual decomposition rates.

Actual experience in four operating RSI facilities designed with similar ventilation systems has shown very low levels of ozone concentrations.

Ventilation System

Because of the cold weather in the Atlanta area, the air intake will be via a fan located at the opposite end of the cell from the exhaust. A differential flow between the exhaust and intake fans will be maintained to provide a slight negative pressure between the cell and the warehouse.

Ozone Production in Irradiation Cells

Calculations for ozone production have been made using the calculations of Swanson which appear in Chapter 2.1 of "Radiological Safety Aspects of the Electron Linear Accelerators". A copy of this report is enclosed.

Swanson's Formula No. 11 is used to calculate the production rate for ozone:

$$P\ (\text{liters/min}) = 2.1 \times 10^7\ D(\text{rads/min/m}^2)\ S(\text{m}^2)\ L(\text{m})$$

$$D = \frac{1.2 \times 10^7}{60} = 2 \times 10^5\ \text{rads/min}$$

S = surface area of sphere = 4 pi r^2 = 12.6 m^2 of one meter radius (Co-60 is a 4 pi emitter)

L = average path lt of gamma rays = 4 meters

P = $2.1 \times 10^{-7} \times 2 \times 10^5 \times 12.6 \times 4$ = 2.06 liters/min concentration following one minute of 'beam-on':

$$C_{(t_b)} = \frac{pt_b}{V} \quad \text{(formula 3)}$$

$$= \frac{2.06 \times 1}{5.6 \times 10^5} = 3.6 \times 10^{-6} = 4\ \text{ppm}$$

This is 40 times greater than the threshold limit value (TLV) for ozone. The TLV is the maximum concentration averaged over an eight hour work shift, assuming a 40 hour work week.

The ozone concentration will fall off exponentially upon shutdown in the following manner:

Section No. 16

Ventilation System

The ventilation system is necessary to remove ozone and heat from the cell. The ozone is produced through ionization of the oxygen in air. The heat is generated from absorption of the gamma rays by the product carriers and shielding.

Several theoretical equations have been derived to predict the generation of ozone brought about by the interaction of gamma rays and oxygen. Sample calculations are included herein as examples.

If the theoretical numbers of ozone generation are used to size a ventilation system, a very large fan would be required to reduce the ozone concentration to the 0.1 ppm acceptable level. Fortunately ozone is a very unstable material and rapidly destroys itself by recombination. Reported G-values range from 0.1 to 20 depending on temperature, humidity, and geometric considerations.

The KSI facilities have ventilation rates through the cell of 4,000 cfm. This rate is twice that of comparable sized facilities. A percentage of the air is sucked through the maze and discharged through the roof thereby maintaining a negative pressure differential between the cell and the warehouse area. This system has proven to be very adequate as evidenced by the absence of ozone upon entering the cell after the sources are lowered. The nose is an excellent ozone detector, with the lower level of detection being around 0.05 ppm. At 0.1 ppm, definite irritation occurs.

A dual exhaust fan is employed to provide a backup in the event of a failure. Each fan will draw 4,000 cfm. Together they draw approximately 6,000 cfm.

The air, as it leaves the cell, passes through a rough filter and then through a HEPA filter.

A steel grate is embedded into the roof at the vent exit to prevent anyone from climbing down through the vent duct.

Smoke detectors and temperature sensors are installed in the exit vent to detect fires in the cell. These are interlocked to shut off the fans when a fire is indicated. This will tend to smother the fire and prevent clogging of the HEPA filter.

Section No. 15

Water Treatment System

The water in the storage pool serves the dual function of being a biological shield and serving as a medium in which to transfer the sources. The principal problems encountered are corrosion and clarity.

To minimize the potential for corroding the sources, all of the materials used in the storage pool are stainless steel. Included are: 1/8" thick liner, source modules, source racks, source cables, guide cables, re-circulating pipes. The stainless steel liner also provides assurance against leaks due to cracks in the concrete or tile as are used in other facilities. Stresses can be generated by the weight of the cask or to seismic or ground disturbances. The stainless steel liner is contained within a 16" reinforced concrete form.

All plumbing between the stainless steel tank and the water treatment area is stainless steel. In the treatment area which is out of the radiation environment, plastic piping will be used.

Water is circulated by a pump from the pool, through a filter, through a mixed bed de-ionizer, through a heat exchanger (optional), and back to the pool.

The water is withdrawn from an overflow weir at the top of the pool at one end. It is returned to the bottom of the pool at the opposite end to assure good mixing. There are no penetrations in the stainless steel liner below 2' from the top to prevent accidental draining of the pool.

The conductivity of the water is maintained at 20 umhos/cm to further control corrosion potential. Conductivity meters on the ion exchangers will indicate when regeneration is required.

The water level in the pool is controlled at the sump located outside the cell in the water treatment area, since they are hydraulically connected with a 1" stainless steel pipe. Immersion electrodes in the sump will actuate a solenoid valve on the make-up line to control the pool level within control limits and alarm at abnormally high or low levels.

A timer on the make-up solenoid will indicate if excessive amounts of water are being used, which would be indicative of a water leak.

? and/or back siphoning?

Attachment
Application for Radioactive Material License
Reference U.S.N.R.C. Regulatory Guide 10.9
Item No. 13:

The biological shield for this facility was based on the similar design for the Tustin and Schaumburg facilities, where only background readings have been recorded at the 1.5 MCi source loading level. The shielding has been designed to provide less than 0.25 mR/hr at all external surfaces with a 10 MCi source loading. A 100% occupancy level has been designed into the shielding although less than a 10% occupancy level is anticipated adjacent to the cell walls.

Ref. Section No. 3 "Hot Cell Safety System"
Section No. 5 "Biological Shield Calculations"

Note: ANSI N43.10-1984 specifies that an exposure rate of 2.5 mR/hr from the accessible surface of the liquid shielding i.e. water in storage conditions.

Attachment
Application for Radioactive Material License
Reference U.S.N.R.C. Regulatory Guide 10.9
Item No. 13h

The water storage pool is 6'W x 25'L x 24'D. It consists of a 0.125" thick stainless steel liner surrounded by 16" of reinforced concrete. A 3" stainless steel suction line takes the pool water from an overflow weir located in the top corner of the pool to be filtered and deionized. The pumps, filters, and deionizers are located in a pit adjacent to the outside of the shielding wall. The pump is below the pool level such that it is always primed.

The filtered and deionized water is returned to the bottom of the pool at the opposite end from the suction weir via a 3" stainless steel pipe. This ensures proper circulation and treatment of the water. The pH of the water will be maintained between 6 and 8 and the conductivity below 20 micromhos per cm.

Water level is controlled in a small stainless steel tank located in the water treatment sump. This tank is connected hydraulically to the main tank by a 1" stainless steel pipe. These controls are not subject to radiation damage in this location.

A 4" overflow is provided from the tank to a floor drain in the water treatment sump to protect against failure of the water fill valve.

A 2" water line is connected to the pool return line to supply water in the event of a leak in the tank. The use of the welded stainless steel liner precludes any leakage from the tank.

Ref. Section No. 7 "Design Safety Analysis"
Section No. 8 "Source Control System"
Section No. 15 "Water Treatment System"

Attachment
Application for Radioactive Material License
Reference U.S.N.R.C. Regulatory Guide 10.9
Item No. 13d

All conveyor actions are pre-programmed into the sequencer, and constantly monitored on each conveyor cycle. In the event of conveyor malfunctions, the sequencer will shut the system down.

Ref. Section No. 1 "General Description of Facility"
Section No. 2 "General Description of Conveyor and Material Flow"
Section No. 7 "Design Safety Analysis"
Section No. 8 "Source Control System"

DISTRIBUTION
JEAyer NBassin
TDorian, OELD
GJackson, LFMB
RECunningham
FCML r/f
FC Central File
NMSS r/f

JUN 25 1984

Radiation Sterilizers, Inc.
ATTN: Mr. Allen Chin, President
3000 Sand Hill Road
Menlo Park, CA 94025

Gentlemen:

This refers to your application dated April 4, 1984, for amendment to License No. 04-19644-01. The application for license amendment requests authority to use Department of Energy WESF capsules in your Schaumberg, Illinois, and Westerville, Ohio facilities.

We are not now prepared to license the contemplated use of WESF capsules in facilities where there will be dry irradiation, wet storage of these capsules. Pacific Northwest Laboratories (PNL) has been conducting tests to provide the data needed to estimate long-term attack of 316-L stainless steel by the cesium chloride contained in the WESF capsules. In a March 1984 publication, PNL-4847, which is available from the National Technical Information Service, United States Department of Commerce, 5285 Port Royal Road, Springfield, Virginia 22161, it observed a linear metal attack of about 0.008 inches per year at a metal/CsCl interface temperature of about 430° c. This finding was in the absence of the thermal cycling that takes place in the dry irradiation/wet storage mode. We believe that thermal cycling can only result in aggravating the rate of attack. If the linear attack rate relationship holds, the 0.136 inch thick inner capsule would be jeopardized long before the 30 year half-life for cesium-137.

We cannot take further action on your application until more information is available about the effect of thermal cycling on the WESF capsules. We will resume processing of your application when the needed information is provided to us.

Sincerely,

8504240262 850408
NMSS LIC30
04-19644-01 PDR

Nathan Bassin, Acting Chief
Material Certification and
Procedures Branch
Division of Fuel Cycle and
Material Safety

FCAF	OELD	FCMC	FC		
JEAyer	TDorian	NBassin/sc	RECunningham		

RADIATION
SPECIALISTS
INCORPORATED

FEDERAL EXPRESS

July 23, 1984

Mr. Nathan Bassin, Acting Chief
Material Certification and Procedures Branch
Division of Fuel Cycle and Material Safety
U.S.N.R.C. - Willste Bldg.
7915 Eastern Ave.
Silver Spring, MD 20910

Garth Tingey has requested "serious" comments per Telcon w/NRC 9/18/84 @ N.S. Mtg for - Day of Letter.

Dear Mr. Bassin:

In response to your letter dated June 20, 1984, I have had several discussions with Messr.'s Garth Tingey and Gary Bryan of P.N.L. Both have assured me of their belief that the specific data cited in Mr. Bryan's report PNL-4847 was erroneous.

Enclosed is a copy of a letter written by Mr. Garth Tingey to substantiate my position that the WESF capsules should be safe in my application. The interface temperature in my application is not expected to exceed 200 degrees Centigrade, whereas the data cited to deny my request was applicable to temperatures of 450 degrees Centigrade. Thermodynamically, lower reaction rates will always result from lower temperatures.

The data on the Sandia irradiator, where the interface temperature was estimated to be about 200 degrees Centigrade showed corrosion rates of about 0.0002 inches per year. Using this rate of attack, 680 years would be required to corrode through the inner 0.136 inch thick stainless steel encapsulation. Considering that there are two 0.136 inch layers and that a linear corrosion rate is assumed, there seems to be little danger of a corrosion failure of the capsules prior to their decay through 42 half lives. At which time the amount of radioactivity would be negligible. Seven half lives will reduce the activity to less than one percent. In all probability, the WESF capsules will be re-cycled to D.O.E. within one or two half lives.

Low temperature thermal cycling has never been shown to enhance high temperature corrosion rates. Conversely, the opposite will most likely occur following the generally accepted laws of thermodynamics, and result in lower corrosion rates.

I have had several discussions with the metallurgists at Climax Molybdenum Company, a leading supplier of stainless steels, concerning the effects of the low temperature thermal cycling on 316L. The enclosed letter expresses their opinion on the possibility of fatigue failure induced by thermal cycling. In their analysis, they refer to

8504240255 850408
NMSS LIC30
04-10444-01 PDR

million cycle fatigue limits without problems. Our estimated 30 year operation would result in about 12,000 cycles based upon one cycle per day. Clearly this low temperature cycling will not adversely affect the integrity of the WESF capsules.

I have included also a copy of a U.S.N.R.C. license issued to the University of Minnesota authorizing the use of cesium-137 in a wet storage application which could provide a precedence for this approval.

As a result of extensive discussions and review of the WESF capsule design and construction, I have not found any substantive reason why the WESF capsule should not be approved for immediate use in my facilities. The details of these facilities have already been approved by the N.R.C., and my request is for the inclusion of an alternate radiation source which has met all of the N.R.C. testing requirements for sealed sources.

I can sympathize with N.R.C. concerns over possible downstream, unforeseen problems. I have discussed this concern with the D.O.E. and they have suggested a capsule monitoring program whereby periodically a capsule would be removed and returned for analysis which would give early warning of a potential long term problem.

I am in full agreement with this approach, as well as the requirement for any other reasonable operating conditions which could be included in the approval. I am hereby requesting immediate approval of the WESF capsule in RSI facilities based upon the information provided herewith and previously by the D.O.E. By including the requirement of periodical D.O.E. capsule testing in the approval, I believe that we will all be more comfortable.

I believe that I have adequately addressed your concerns, and look forward to your rapid approval. Since this is an extremely urgent request, I will be calling you next week for a verbal response.

Sincerely,

Allan Chin

Allan Chin
President

AC:ck

Enclosures

August 21, 1984

Mr. Thomas E. Hill
Environmental Radiation Specialist, Sr.
Radioactive Materials Unit
Radiological Health Section
G.M.H.I. Room 425-South
1256 Briarcliff Rd., N.E.
Atlanta, GA 30306-2694

Dear Mr. Hill:

Thank you for your comprehensive review of our license application. For simplicity and clarity, I will use respond to your comments sequentially as presented in your June 19, 1984 letter.

Source Approval:

1. The NPI sources were approved for use in category IV type irradiators by the Maryland Department of Health and Menta Hygiene. A copy of the registration is included for your references as EXHIBIT A.

2. The WESF cesium capsule has been verbally approved on August 14, 1984. Mr. Bernie Singer, Head of the NRC licensing Branch, notified me of this in a telecon, which will be confirmed in writing. Mr. Singer's phone number is 301-427-4211. Usage of these sources will be contingent upon the establishment of a research protocol whereby the DOE will periodically remove a WESF capsule from one of RSI's facilities and destructively test it for corrosion or other potential failure modes.

   The DOE has been committed to perform this testing program.

   The test program will be applied to one RSI facility, and will be used to monitor the use of cesium in all other RSI facilities. Due to current schedules, it is quite likely that Atlanta will be the first facility to utilize cesium on a commercial basis. DOE monitoring will therefore be performed at this location.

A. General

1. The attachments referencing Items 5a, 6, 8, 9, 10, and 11 apply to the Georgia Department of Human Resources Application for Radioactive Material License.

192

Item 12 of the application was responded to through reference to Regulatory Guide 10.9 as recommended in your letter of November 29, 1983. Items 13 to 17 of the Regulatory Guide 10.9 respond to item 12 of the application.

2. The facility shielding has been designed to meet the requirements of an unrestricted area for all areas in and around the building excluding the interior of the radiation cell during normal operation. When the sources are in the raised or operating position the maze and cell are controlled as a restricted area. The roof of the radiation cell will be treated as a controlled or restricted area since the source winches are accessible in that area.

3. All entrances to the RSI building are provided with locks to secure and control access. The normal mode of operation will be seven days, round the clock. During early startup, five-day operation may be followed. The facility will be locked on weekends. Additionally internal locked doors will prevent access to the maze entrance from within the building.

   Access to the roof can only be attained from inside the building. A locked roof hatch maintains security against building access from the roof. The hatch is opened only during isotope loading or roof maintenance periods.

4. Following our discussion on this subject, I contracted the contractor, and he provided me with a written explanation which is included for your review as EXHIBIT B.

B. Application Item 4. Radiation Program Personnel

1. Mr. Tom Fisher has been hired to be the general manager and full-time Radiation Safety Officer for the Decator facility. A summary of his qualifications is included for your review.

   Mr. Fisher has been responsible for the total operation and maintenance of the Becton-Dickinson gamma facility in Sumter, SC for the past three years. This facility is similar to the Decatur facility in size and complexity. Background and experience information for Tom Fisher is shown in EXHIBIT C.

2. With the exception of the last sentence in item 15c, the duties outlined are the responsibility of the facility RSO. The Corporate RSO will audit the facility to assure that the facility RSO is operating in compliance with the license.

The corporate RSO may delegate the auditing function to other officers of the corporation.

The facility RSO may designate alternate or co-Radiation Safety Officers to act in his behalf from his staff providing that they are adequately trained and instructed to carry out these duties.

3. The initial isotope loading into the Decatur facility will be performed by either Allen Chin, Bruce Meyer, Thomas Hurley, Barry Fairend, or Bob Rawsey. Authorization under USNRC license C4-19544-01 is included for reference as EXHIBIT D.

Mr. Fisher and members of his staff will be instructed in the isotope loading procedures, and will be qualified to install isotope during future loadings.

4. The material handlers receive a minimum of 20 hours of basic training and orientation. During this period, the material outlined in Section 9 of the Appendix is covered. Additionally, training in first aid and worker safety are provided.

The shift supervisors receive a minimum of 40 hours of training which includes the 20 hours of basic training and orientation provided to the material handlers. An additional 20 hours of training is provided which includes:

a. Care, operation and maintenance of the conveyor system
b. General understanding of the safety system operation
c. General operating procedures
d. Emergency procedures
e. General radiation safety rules
f. Record keeping
g. Dosimetry calculations and methods.

Written tests are required for each employee and are kept on file. The minimum passing score is 80% and employees are re-instructed in subjects where difficulty is encountered.

Samples of training texts and tests are included as EXHIBIT E.

5. The terms "independent user" and "shift supervisor" are used interchangeably. These employees are authorized to operate the mechanical conveyor system in order to process the material to be sterilized. They are trained to operate the pre-programmed control console which includes starting and stopping the conveyor, and raising and lowering of the sources. These are considered to be normal operations.

In the event of an abnormal occurrence relating to radiation levels in the maze or cell, they are instructed to prevent personnel entrance to the maze, maintain surveillance with a survey meter, and to alert the Radiation Safety Officer. These personnel are not automatically authorized to move individual sources into or within the rack.

A licensed user is a person who has been trained in the proper procedures for handling and moving individual sources. Sources are handled during any loading operation, and less frequently when sources are shifted around within the source rack.

The licensed users generally include the plant general manager, the production supervisor, and possibly one or more of the senior shift supervisors.

Shift supervisors or independent users generally receive three months on the job training although shorter periods of training are adequate depending upon prior education and experience.

6. The general manager will maintain the training and experience records for all employees in his facility.

7. A copy of the list of these pamphlets is included as EXHIBIT F.

8. The Radiation Safety Officer of the plant is required to have a sound background in radiation safety.

9. The line of authority at each plant flows from the plant manager to the production supervisor to the shift supervisors to the material handlers during normal operations. During emergency operations, the Radiation Safety Officer will assume the position of highest authority.

10. Copies of Chapter 290-5-23-.07 of the Georgia Rules and Regulations for Radioactive Materials (July 12, 1982) will be given to and discussed with each new employee.

The posting requirement option of 4(b) will be employed.

This training and instruction will be in addition to RSI's normal training schedule. Much of the material covered by 290-5-23-.03 is included in our normal training course.

C. Application 5.A. Attachment

1. In the other RSI facilities, the weight of the cobalt sources and the racks were such that when the power failed, the source rack would lower by gravity in a controlled manner. The variation between an empty and full cobalt rack was about 2 to 1.

   When cesium is used, the variation is much higher (5 to 1) and a more controlled rack descent is required. An auxiliary power supply will be used to accomplish this, and this statement should apply to item 13d.

D. Application Item 6 Health Physics Instrumentation

1. Model 305A survey meter is certified by Xetex Corp. to operate continuously in 10CR/hr fields. Additionally it is normally checked up to 1000 R/hr fields after manufacture as an acceptance test. A specification sheet for the 305A meter is included as EXHIBIT G.

2. Xetex was contacted in reference to an approval as a calibration lab. Their response was that they are licensed to possess and use the calibration sources by the State of California. They are also traceable to NBS standards. Xetex routinely calibrates meters for NRC. NRC has accepted Xetex's calibration procedures which were submitted as part of the RSI license application. NRC does not approve calibration labs, but accepts them based upon procedural review.

   Pertinent sections of the Xetex License are included in EXHIBIT H.

E. Application Item 7, General Instrumentation

1. Model 301A Xetex area monitors are used to monitor cell and maze dosage levels. One detector is located on the wall of the radiation cell perpendicular to the plane of the source rack. This detector is designed to alarm at 100 mR/hr whenever the sources are at the bottom of the pool. When the sources are in the raised position the meter is switched off because of the high (25,000 R/hr +) dose rates at that location which would prematurely damage the G-M tube.

   The second detector is located in the maze and operates continuously to monitor the exiting carriers for potential isotope carry out. This detector will alarm and stop the conveyor at 1R/hr levels.

A specification sheet for the 501A area monitor is included as EXHIBIT I.

2. A diagram showing the general location of the detectors and warning signals is included as EXHIBIT J. The operating console and readouts are located in the control room. Referencing EXHIBIT K, the control room is the corner office closest to the conveyor room entrance.

F. Application Item 9, Area Monitoring

1. The daily radiation area surveys are performed each time entrance is made to the radiation cell. These are unscheduled events and can occur several times during a shift or not at all.

   Documentation is kept of each cell entry. No reference is made of normal radiation levels during these entries.

G. Appendix Section 3, Gamma Cell Safety System

1. The general manager maintains control over the duplicate master keys for the system operation. During normal operations, the key is captive in the control console and under the control of the shift supervisor. During periods of extended shutdown, the key is secured in a lock box.

2. Personnel access to the maze and cell during normal operations is restricted in several ways. First the conveyor room access is controlled via locked doors (Reference EXHIBIT K sheet A2). All tote loading and tote shifting on the carriers is performed within the controlled access conveyor room.

   A second barrier wall controls access to the maze and cell. This wall contains two sliding doors which open and close on signal to permit entry and exit of product carriers. They are designed to prevent personnel passage with the carrier. This wall also contains a personnel door which will always allow exit to the conveyor room and the building.

   Additionally the maze entrance is monitored by photocells and floor pressure mats. If either the photocells or pressure mats are triggered, the sources will be automatically lowered and alarms activated.

3. The pre-set time for correcting malfunctions of the conveyor system varies depending upon the isotope loading and dose requirements.

The conveyor motion through the radiation cell is of an indexing nature. Dosage is controlled by controlling the index cycle or pre-set time. For example, if the index cycle time is three minutes, any malfunction which can be corrected within that period will not affect the dosage delivered to the product. If the malfunction cannot be corrected within the three minute cycle, the sources will be lowered to prevent overdosing the product.

H. Appendix 5, Biological Shielding Calculations

1. Shielding calculations for pool:

pool depth = 24 feet water
rack height = 13 feet
Assume all cobalt under 15 feet water (middle 5 feet of rack)
Self-absorption factor = 1/4
TVL water = 13.9 inches
15 feet water = 13 TVL
= 81.4 inches of 138 pounds/cubic feet concrete
For reference, the ceiling is 73 inches of concrete.
Shielding requirements for cesium are diminished by approximately 30 percent from cobalt because of lower energy gammas.

I. Appendix Section 7, Design Safety Analysis

1. The pressure mats are each 3 feet long. The total 6 foot span is beyond the normal step.

2. The sliding doors are interlocked with the conveyor system and open and close to permit entrance only of the product carrier. Any forced opening of the doors will alarm and shut the system down.

3. The emergency exit door in the wall adjacent to the sliding doors is designed to permit exit at all times via a push bar lock on the door. Entrance cannot be normally made through this door.

4. Alarms are actuated and the sources lowered whenever the photocells or pressure mats are violated when the sources are in the raised position. Unscheduled opening of the sliding doors will also shut the system down.

J. Appendix Section 8, Source Control System

1. The leak test on the cask is performed by RSI. Upon receipt of the shipping cask, the bottom drain and top vent plugs are removed. A baseline count is made on a container of distilled water which is subsequently used to fill the cask cavity. Filling is from the bottom drain hole.

   After 30 minutes the water is allowed to drain from the cask through a paper filter. A count is then made on both the filter and the water. If measurable differences in counts are observed, from the baseline, the cask is rerealed and returned to the vendor.

   If the counts show no change from the control, the loading process continues. The 304A or 305A survey meters equipped with an ear jack are used to measure the radiation counts.

2. Three basic tools are used to load the cobalt source modules. One is designed to remove individual source rods from the shipping cage containing the sources and to place them into the modules. A second tool is designed to hold the source module in place beneath a funnel to assist loading the sources into the module. A third tool is used to transfer the modules from the module holder to the source rack.

   When cesium capsules are used, each capsule is transferred directly from the shipping container into the source racks.

K. Appendix Section 11, Radiation Safety Maintenance Program

1. The cell and maze detectors are Xetex model 301A area monitors. The detectors are halogen quenched GM tubes located in the cell and maze. The monitor electronics are located in the control room.

   These units are checked by lowering the alarm limit to a level which can be triggered by the small cesium check source.

   The unit is also equipped with a "Test" button which will insert a signal into the system which permits the logic circuit to be tested for proper response.

2. The Georgia limit of 0.005 uCi of activity per source will be the basis for determining leakage from the sources.

L. Appendix 12, Emergency Procedures:

1. The primary emergency procedure to protect any personnel from radiation exposure is to prevent access to the cell. The use of NRC approved sealed sources, protective modules and metal cages assure that the sources will not be mechanically or thermally damaged.

   Heat and smoke sensors will detect fire in the cell and cause the sources to be lowered. No smoking restrictions apply within the plant to eliminate the possibility of carrying live flames into the cell. The materials processed are not spontaneously combustible. ? Combustible materials are not processed. ?

   If a fire does ignite, the sources will be lowered, the ventilation fans shut off, and the overhead sprinklers turned on. After the fire is extinguished the system will be cleared using normal precautions for monitoring for radiation.

M. Appendix Section 15, Water Treatment System:

1. The makeup water line is monitored for "on" time. Any excessive ? "on" time indicates a possible pool leak.

2. No openings in the pool wall are below 18" of the top which limits the minimum height of the water in the pool to 22.5 feet of water.

3. The pool water samples are taken under the supervision of the RSO. The samples are taken directly from the pool at a depth of 16" to 24". Since the pool water is being re-circulated, the sample is representative. The samples are then sent to Helgeson Nuclear Services for counting and measurement.

4. Helgeson's license is California 1378-59.

5. The pump discharge pressure is used to monitor filter changes. Filters are changed when outlet pump pressures indicate that the filters are becoming clogged. If a filter is found to be slightly contaminated, a commercial nuclear disposal service will be enlisted to dispose of it. Additional pool tests will be performed to check for the source of contamination.

6. The conductivity of the output from the de-ionizers is monitored to 20 u mhos/cm. Commercial de-ionizer companies will service the units.

7. City sewer

N. Appendix Section 16, Ventilation System:

1. The major amount of cell contamination is paper fibers which are collected on the roughing filter preceding the HEPA filter. These filters are checked quarterly for dirt and dust accumulation which could restrict the flow and replaced as required.

   Proper care and replacement of the pre-filters will normally eliminate the need to replace the HEPA filters.

I trust that this information is responsive to your request for additional information, and that the license approval for the Decatur facility will be issued soon. Construction of the facility is proceeding rapidly, and if you would like a tour of the facility during this period, I am sure that Tom Fisher will be glad to oblige you. Our scheduled completion date is around October 1, 1984.

Sincerely,

Allan Chin
President

AC:ck

G. Ledbetter, Ph.D./Commissioner

GEORGIA DEPARTMENT OF HUMAN RESOURCES

RADIOLOGICAL HEALTH SECTION

G.M.H.I., Room 425 South/1256 Briarcliff Rd., N.E./Atlanta, Georgia 30306-2694

September 26, 1984

Allan Chin, President
Radiation Sterilizers, Inc.
3000 Sand Hill Road
Building # 4-245
Menlo Park, California 94025

Dear Mr. Chin:

This letter is to acknowledge receipt of your letter dated August 21, 1984 in response to our letter dated June 19, 1984. A review of your letter and a review of your application dated March 19, 1984, using ANSI N43.10-1984 as a guide, reveals that additional information is needed.

Thank you for the documentation of the approval by the Maryland Department of Health and Mental Hygiene of the NPI Cobalt 60 sources. We are awaiting additional information form the NRC on the WESF Cesium 137 capsules before considering them for licensure.

A. The following comments and/or questions are in response to your August 21, 1984 letter.

1. Since the facility RSO may delegate some of his duties and responsibilities to a Co-Radiation Safety Officer, what is the minimum training and experience for a Co-Radiation Safety Officer?

2. Provide an instruction outline for the training given to employees which should include the requirements of the Georgia Rules and Regulations for Radioactive Materials, Chapter 290-5-23-.07.

3. Describe the documentation that is made of each cell entry.

4. Provide calculations showing the pool surface gamma rate under normal conditions of source storage.

5. If the emergency exit door in the barrier wall #2 is left open can the source be raised and the conveyor placed in operation?

6. Is there an alarm system activated if any of the interlocks are violated by a person attempting to enter the cell if the sources are not in the fully shielded position and are not in the fully raised position?

7. What mechanisms are employed to detect and prevent back siphonage of water from the pool? See ANSI Standard N43.10-1984, Section 10.2.1 and Section 10.5.

8. When collecting leak test samples from the pool water, what are your procedures, including calculations, for insuring that the sample is representative of the water in the pool?

B. The following comments and/or questions are the result of a review of your application dated March 19, 1984 using the new ANSI N43.10-1984 standard "Safe Design and Use of Panoramic, Wet Source Storage Gamma Irradiators (Category IV)".

ANSI, Section 3.3

1. What are your administrative procedures that insure the repair of interlocks and other safety related devices has returned them to the designed operational condition?

ANSI, Section 5

1. Does your survey report include all the information outlined in section 5.4? If not, justify your reasons for not maintaining the information.

2. Does your contamination test report include all the information outlined in section 5.5? If not, justify your reasons for not maintaining the information.

ANSI, Section 7

1. Will your measurement configuration for surveying the external accessible surfaces of the radiation shield conform to the criteria in section 7.2? If not, justify your reason for not following this criteria.

ANSI, Section 8

1. Do you use a chain or cable as described in section 8.2 to insure that a person entering the cell has a survey meter or chirper with him? If not, describe method.

2. Does your radiation monitor in the cell interlock with the personnel access door as described in section 8.4? If not, describe how you meet this standard.

3. Is your personnel access door in the barrier wall #2 interlocked as described in section 8.6? If not, describe how you meet this standard.

4. Does your product entry/exit doors have audible and visible alarm that indicate a malfuction in the interlocks as described in section 8.11? If not, describe how you meet this standard.

5. Do you have source status indicators at the personnel and product entrance/exit doors that indicate the source status as described in section 8.14? If not, describe how you meet this standard.

6. Is your cell roof plug and/or roof hatch interlocked to prevent operation of this system and/or return of the sources to the fully shielded position when the roof hatch is opened and/or the cell roof plug is removed as described in section 8.15? If not, describe how you meet this standard.

7. What type of physical barrier is used to prevent personnel from inadvertently falling into the source storage pool? (Refer to section 8.A.)

8. ANSI, Section 8 (Continued)

8. How will you comply with standard 8.21 "Noxious Gas Control" in so far as controlling personnel access until ozone, nitrogen oxide and other noxious gases are below accepted threshold limit values?

9. Standard 8.22 requires that you provide a disconnect mechanism to enable servicing to be carried out without danger of the source being inadvertently exposed and that a positive means be provided to ensure that the source exposure mechanism is inoperative during servicing. How will you comply with this standard?

10. In accordance with standard 8.23.1, does a power failure of a minimum of ten seconds result in the sources being lowered to the fully shielded position?

ANSI, Section 10

1. Standard 10.2.2 requires the use of visual and audible signals in the control room to indicate a water level twelve (12) inches below normal. Do you comply with this standard? If not, explain.

2. Is it possiible to enter the radiation cell using normal entry procedures while an abnormal low level condition exists? If so, what is your justification?

3. Standard 10.3 requires the conductance of the water not to exceed 10 microsiemens/cm. Will your water conditioning system meet this standard? If not, what is your justification?

4. Describe your procedures for complying with standard 10.3 regarding backwashing of filters and regeneration of resin beds.

5. Describe how you will comply with standard 10.6 cleaning of the source storage pool.

ANSI, Section 11

1. Do you plan to follow the recommended color coding for controls outlined in standard 11.3?

ANSI, Section 12

1. Standard 12 requires the owner to notify and obtain approval from the pertinent regulatory authority (Georgia's Radiological Health Section) prior to any modification which may cause a radiation hazard. Does RSI commit to follow this standard?

ANSI, Section 13

1. Will your tools and procedures comply with the requirements of standard 13.5 when servicing the storage pool, its components and for manipulating sources?

B. (Continued)

ANSI, Section 14

1. Does your administrative procedures address, as a minimum, those areas covered in standard 14.1?

2. Do you maintain a log book on file to record, as a minimum, the types of information outlined in standard 14.2?

3. Do you have or will you develop written emergency procedures for each type of emergency that may reasonably be encountered as outlined in standard 14.4.

4. Do your procedures for visitors, as outlined in standard 14.5, also include provisions for dosimeter identification, escort identification and procedures for group visitors?

ANSI, Section 15

1. Since it is not clearly stated in sections 9 and 13 of the Appendix to the application, are the qualifications of your independent users basically those outlined in standard 15?

ANSI, Section 16

1. Do you perform external radiation level surveys on the transport containers to verify that radiation levels do not exceed 10 mr/hr at 3 feet as outlined in standard 16.4.1?

2. Do you perform external contamination wipe test on the transport containers as outlined in standard 16.4.2?

3. Do you follow ANSI N43.10-1984 Appendix A procedures for performing the test for internal contamination of the transport container outlined in standard 16.4.3? Removable contamination should not exceed 0.005uci per source. The specifications on the Xetex did not give the minimum detectable level or sensitivity of the instrument. Please provide.

4. In addition to monitoring water filters with film badges, will you survey the filters and resin beds weekly with a portable survey meter as described in standard 16.5.1?

5. In addition to the semiannual water analysis for source leakage will you conduct monthly contamination wipe test inside the cell as outlined in standard 16.5.2 and also on a semiannual basis additional test for contamination as outlined in standard 16.5.3?

ANSI, Section 17

1. Do you use a formal checklist when checking for proper functioning of interlocks as described in standard 17.2.1?

B. ANSI, Section 17 (Continued)

2. Will you perform the checks and test described in standards 17.2.1.2 and 17.2.1.3?

3. Will you perform tests for source leakage after source removal and redistribution as outlined in standard 17.3?

4. Will you perform additional surveys after sources are redistributed or when shielding has been decreased as described in standard 17.4.

ANSI, Section 18

1. In reference to standard 18.2, what is your general procedure for removal of a damaged, leaking, or suspected leaking source?

2. In reference to standard 18.3, what is your procedures for disposal of contaminated material?

Should you have any questions or if we may be of assistance, please do not hesitate to contact us.

Sincerely,

Thomas E. Hill
Environmental Radiation Specialist, Sr.
Radioactive Materials Unit
Radiological Health Section

TEH/ck

cc: Mr. Tom Fisher, General Manager
Radiation Sterilizers, Inc.

266

October 4, 1984

Mr. Thomas E. Hill
Environmental Radiation Specialist, Sr.
Radioactive Materials Unit
Radiological Health Section
Georgia Department of Human Resources
G.M.E.I. Room 425-South
1256 Briarcliff Road N.E.
Atlanta, GA 30306-2694

Dear Mr. Hill:

I have received your September 26, 1984 request for additional information. My responses have been sequentially keyed to your questions.

A1. The Co-Radiation Safety officer will be required to have completed the RSI training course or equivalent. Additionally he will be required to have successfully completed a nominal one week long course in radiation protection given at the University level. He will be knowledgeable of all radiation procedures, record requirements and emergency responses. A minimum six month on the job training period will also be required.

A2. In addition to the previously supplied training information, new employees will be provided with written copies of Chapter 290-5-23-07 of the Georgia Rules and Regulations for Radioactive Materials. The information contained in this chapter will be reviewed to respond to any questions which the employee may have.

A3. Each cell entry is documented to include the following information:

a. Date
b. Time of entrance
c. Time of exit
d. Name

[illegible] Road [illegible] Road. Bldg. 84-245. Menlo Park, CA 94025 (415) 854-2600

e. Affiliation
f. Initial dosimeter reading
g. Final dosimeter reading
h. Dosimeter number
i. Reason for entry

A4. Under normal conditions of source storage, the cobalt will all be under 15 feet of water. The depth of water is equivalent to 15 x 62.4/138 or 81.4" of 138# concrete. By reference the ceiling of the cell is only 73" of 138# concrete.

Measurements at the pool surface and roof surface have confirmed that no detectable levels of radiation exist at the four RSI systems currently in operation using similar shielding.

A5. No.

A6. Yes, the alarm system is active whenever the sources are not in the completely down position.

A7. All make up water lines are above the pool waters level and check valves are installed to prevent back siphonage.

A8. Pool samples are taken by grab sampling at a depth of 18-24" from the pool. The recirculating water pump mixes the water sufficiently (20gpm) to assure that the sample is reasonably representative.

ANSI Section 3.3

1. Yes. All of the interlocks and detectors in the safety system are designed such that failure of any item will not permit system operation until it is returned to the designed operational condition.

ANSI Section 5

2. Only approved sealed sources or special form materials will be used in this facility. These sources are mechanically contained within a source rack in the radiation cell. Generally, once they are loaded they are seldom moved, and there is virtually no possibility of low level contamination in the facility. Therefore there does not appear to be a reason to routinely run wipe tests to determine contamination within the facility. Leak tests on

the pool water monitor the sources for leakage. If a leaky source occurs, contamination test will be run per 5.5.

ANSI Section 7

1. Yes

ANSI Section 8

1. Yes

2. Yes

3. Yes

4. Yes

5. Yes

6. The cell roof plug weighs about 15 tons and is not readily removed. Interlocks on this plug are not necessary. The roof plug is contained within the building. A locked roof hatch, monitors access to it. The source loading procedures include checks to assure the roof plug is in place after each loading sequence. There are no other removable plugs in the shield.

7. A stainless steel grate over the open end of the pool prevents personnel from falling into the source pool.

8. The allowable level for ozone is 0.1ppm. At .05ppm concentrations, the ozone irritates the eyes and nose to the extent that it becomes unbearable. Actual attempts at measuring ozone during periods when the source is raised is difficult since it must be done remotely. Samples must be withdrawn through long lengths of tubing during which it rapidly dissociates, and gives erroneous readings. The irritation to eyes and throats is still the best determinant of proper ventilation. RSI ventilation rates are generally 2-3 times as much as other facility designs. Because of this, very little evidence of ozone, which is very pungent, can be detected in RSI cells even upon immediate entrance after the sources are lowered. Redendant exhaust fans are also used to assure noxious gases are maintained below threshold limit values.

9. Electrical disconnects are installed on each source winch which are required to be used during maintenance and source loadings.

10. Yes

ANSI Section 10

1. Yes

2. No

3. The 10 microsiemens/cm figure is arbitrary, and RSI has selected to use a figure of 20 microsiemens per cm because many stainless steel experts have stated that high purity water is more corrosive to stainless steels. Moderate levels of control are necessary to prevent highly acid or basic solutions from being used. We intend to operate in the 10-20 microsiemen/cm range.

There is a definite hazard in the ANSI spec of not specifying a minimum value of conductance because of the possibility of creating a potentailly hazardous corrosive condition. If you require us to meet the 10 microsiemen/cm limit, we will. Also please specify a minimum level. We feel that the 20 microsiemen/cm limit is safer for the sources.

4. RSI systems employ contracted water de-ionization services. Prior to exchanging the ion exchange columns, they will be checked with survey meters for levels above background.

5. RSI typically uses swimming pool type filters for removing accumulated dirt and debris from the bottom of the pool. The filters shall be constantly surveyed for any increased radiation levels during vacuum cleaning operations.

All vacuuming tools will be immersed and filled with water prior to hooking up to the pump. Upon removal they are checked with a survey meter for excess radiation.

ANSI Section 11

1. Yes

ANSI Section 12

1. Yes

ANSI Section 13

1. Yes

ANSI Section 14

1. Yes, except for the following:

a. RSI facilties are never operated while unattended. When not in operation, the source is lowered to the bottom of the pool and the area and building are secured.

b. The following information is not pertinent and is stored in the office administrative area and not in the control room.

* name and address of irradiator manufacturer (RSI)

* model and serial number of irradiator (RSI design)

* ANSI Compliance designation "N43.10-1984"-Georgia. License confirms compliance

* name and address of source manufacturer(s)

* model and serial numbers of all sources

* type of radionucleide involved and total activity with date of measurement.

* maximum design activity (nominal capacity) of the irradiator

ANSI Section 15

1. Yes

ANSI Section 16

1. Yes

2. No. These tests are performed at the shippers facility prior to shipping. There is no necessity to repeat this test unless the shipping cask is received in a damaged condition. In these instances the shipper is notified immediately for disposition and subsequent handling.

3. The procedure in Appendix A is followed. No survey meter will detect 0.005 uCi. They will however indicate a low level leak. RSI uses a counting method in conjunction with the survey meter which is a more accurate technique. The Xetex meter or any other will probable detect the presence of about 0.5 uCi.

These checks are secondary checks on the supplier who certifies the absences of contaminent (-0.005 uCi) on the sources.

4. Yes

5. Historically contamination wipe test have not been required in this type of facility where only doubly encapsulated sealed sources are employed. The dispersibility of radioactive materials out of these forms has been accepted to be highly unlikely by regulatory bodies, and contamination wipe tests have not been required. Semi-annual test are conducted on the pool water to check for leaky sources.

ANSI Section 17

1. Yes

2. Yes

3. Yes

4. Yes

ANSI Section 18

1. The procedures of 18.2 will be generally followed for removal of a damaged, leaking or suspected leaking source.

2. The procedures of 18.3 will be generally followed for disposal of contaminated material.

I expect to receive a letter shortly from the NRC confirming the conditions under which the Cesium-137 WESF capsules may be used in RSI facilities. I will forward a copy to you upon receipt.

I trust that this information will be sufficient to permit the issuance of a license to the Decatur facility.

If you have any further questions, please do not hesitate to call me.

Our facility is nearing completion, and we expect to begin shipment of isotope into it early in November. If you foresee any difficulty in this schedule, I would appreciate an immediate phone call.

Sincerely,

Allan Chin

Allan Chin
President

AC/tb

cc: Tom Fisher
Radiation Sterilizers, Inc.
2300 Mellon Court
Decatur, GA 30035

'3

October 18, 1984

Allan Chin, President
Radiation Sterilizers, Inc.
3000 Sand Hill Road
Building #4-245
Menlo Park, California 94025

Dear Mr. Chin:

This letter is to acknowledge receipt of your letter dated October 4, 1984 in response to our letter dated September 26, 1984. A review of your letter reveals that several of the questions asked in our letter were not answered.

Please respond to the following referenced questions from our September 26, 1984 letter:

1) ANSI, Section 5. question #'s 1. and 2. Your response to question #2 did not address the contents of the contamination (leak) test report.

2) ANSI, Section 10. question #4. What actions will be taken if just prior to backwashing of the filters and/or regeneration of resin beds surveys show radiation levels exceeding background?

3) ANSI, Section 14. questions #'s 2., 3., and 4.

4) ANSI, Section 16. question #2. A sound health physic practice would indicate that test for contamination would be performed prior to immersion of the shipping cask in your storage pool. We strongly recommend you rethink your position on testing for external contamination of shipping cask.

Should you have any questions or if we may be of assistance, please do not hesitate to contact us.

Sincerely,

Thomas E. Hill
Environmental Radiation Specialist, Sr.
Radioactive Materials Unit
Radiological Health Section

TEH/ck
cc: Tom Fisher, General Manager

RADIATION
STERILIZERS
INCORPORATED

October 31, 1984

RECEIVED
NOV 2 1984
RADIOLOGICAL
HEALTH UNIT

Mr. Thomas E. Hill
Environmental Radiation Specialist, Sr.
Radiological Health Section
Georgia Department of Human Resources
G.M.H.I. Room 425-South
1256 Briarcliff Rd., N.E.
Atlanta, GA 30306-2694

Dear Mr. Hill:

Attached are my responses to your questions listed in your letter of October 18, 1984. Several of the comments you made were the result of proof reading omissions on my part. For simplicity, I have corrected my October 4, 1984 letter to incorporate my responses to your latest questions. ~~I have also made corrections to specific pages of my original application to reflect most of these comments. These corrected pages substituted for the originals.~~ This info has been incorporated into the original Application

Enclosed also is a letter which I finally received from the NRC regarding the use of cesium in my facilities. RSI's intention has always been to make the Atlanta facility the initial site for using cesium as you have been made aware by Mr. Tom Fisher.

Since the use of cesium has special considerations, which the NRC should rightfully evaluate, we have been workign directly with the NRC to obtain licensing for the RSI facilities. Since two of our facilities are in NRC regulated states (Illinois and Ohio), the use of cesium was petitioned from the NRC via an amendment application to those licenses.

As soon as this amendment is approved, we would like to incorporate the use of cesium into the Georgia license. I am in the process of responding to the NRC letter which I plan to submit next week. I will send you a copy of my response at that time so that you will be kept fully informed.

The Georgia application will be the first commercial application of a dry irradiation wet storage facility. The first application of a dry irradiation, dry storage facility will be in Denver, Colorado. Iptech is building this facility, and, since Colorado is an agreement state, licensing is being accomplished jointly between the State of Colorado and the NRC.

Radiation Sterilizers, Inc., 3000 Sand Hill Road, Bldg. #4-245, Menlo Park, CA 94025 (415) 854-2800

I hope to have approval of the NRC within two to three weeks which will coincide with our planned start of isotope loading into Atlanta around the first of December. Please let me know if you anticipate any problems in meeting this licensing schedule.

Sincerely,

Allan Chin

Allan Chin
President

AC:ck

Enclosures

October 31, 1984

Mr. Thomas E. Hill
Environmental Radiation Specialist, Sr.
Radioactive Materials Unit
Radiological Health Section
Georgia Department of Human Resources
G.M.H.I. Room 425-South
1256 Briarcliff Road N.E.
Atlanta, GA 30306-2694

Dear Mr. Hill:

I have received your September 26, 1984 and October 18, 1984 requests for additional information. My responses have been sequentially keyed to your questions.

A1. The Co-Radiation Safety officer will be required to have completed the RSI training course or equivalent. Additionally he will be required to have successfully completed a nominal one week long course in radiation protection given at the University level. He will be knowledgeable of all radiation procedures, record requirements and emergency responses. A minimum six month on the job training period will also be required.

A2. In addition to the previously supplied training information, new employees will be provided with written copies of Chapter 290-5-23-07 of the Georgia Rules and Regulations for Radioactive Materials. The information contained in this chapter will be reviewed to respond to any questions which the employee may have.

A3. Each cell entry is documented to include the following information:

a. Date
b. Time of entrance
c. Time of exit
d. Name

e. Affiliation
f. Initial dosimeter reading
g. Final dosimeter reading
h. Dosimeter number
i. Reason for entry

A4. Under normal conditions of source storage, the cobalt will all be under 15 feet of water. The depth of water is equivalent to 15 x 62.4/138 or 81.4" of 138# concrete. By reference the ceiling of the cell is only 72" of 138# concrete.

Measurements at the pool surface and roof surface have confirmed that no detectable levels of radiation exist at the four RSI systems currently in operation using similar shielding.

A5. No.

A6. Yes, the alarm system is active whenever the sources are not in the completely down position.

A7. All make up water lines are above the pool water level and valves are installed to prevent back siphonage.

A8. Pool samples are taken by grab sampling at a depth of 12-24" from the pool. The recirculating water pump mixes the water sufficiently (20gpm) to assure that the sample is reasonably representative.

ANSI Section 3.3

1. Yes. All of the interlocks and detectors in the safety system are designed such that failure of any item will not permit system operation until it is returned to the designed operational condition.

ANSI Section 5

1. All of the information outlined in Section 5.4 is contained in the RSI survey report.

2. The following contamination test will be run at RSI:

a. Source leaks are monitored by checking the pool water. These tests will be performed by Helgeson Nuclear as indicated in Section 11 of the application.

b. Shipping cask interiors as per Section 8.

c. Shipping cask exteriors as per Section 8.

d. Irradiator wipe tests-similar to "c" above. The data outlined in Section 5.5 will be contained in the contamination test report.

ANSI Section 7

1. Yes

ANSI Section 8

1. Yes

2. Yes

3. Yes

4. Yes

5. Yes

6. The cell roof plug weighs about 15 tons and is not readily removed. Interlocks on this plug are not necessary. The roof plug is contained within the building. A locked roof hatch, monitors access to it. The source loading procedures include checks to assure the roof plug is in place after each loading sequence. There are no other removable plugs in the shield.

7. A stainless steel grate over the open end of the pool prevents personnel from falling into the source pool.

8. The allowable level for ozone is 0.1ppm. At .05ppm concentrations, the ozone irritates the eyes and nose to the extent that it becomes unbearable. Actual attempts at measuring ozone during periods when the source is raised is difficult since it must be done remotely. Samples must be withdrawn through long lengths of tubing during which it rapidly dissociates, and gives erroneous readings. The irritation to eyes and throats is still the best determinant of proper ventilation. RSI ventilation rates are generally 2-3 times as much as other facility designs. Because of this, very little evidence of ozone, which is very pungent, can be detected in RSI cells even upon immediate entrance after the sources are lowered. Redendant exhaust fans are

also used to assure noxious gases are maintained below threshold limit values.

9. Electrical disconnects are installed on each source winch which are required to be used during maintenance and source loadings.

10. Yes

ANSI Section 10

1. Yes

2. No

3. The 10 microsiemens/cm figure is arbitrary, and RSI has selected to use a figure of 20 microsiemens per cm because many stainless steel experts have stated that high purity water is more corrosive to stainless steels. Moderate levels of control are necessary to prevent highly acid or basic solutions from being used. We intend to operate in the 10-20 microsiemen/cm range.

There is a definite hazard in the ANSI spec of not specifying a minimum value of conductance because of the possibility of creating a potentailly hazardous corrosive condition. If you require us to meet the 10 microsiemer/cm limit, we will. Also please specify a minimum level. We feel that the 20 microsiemen/cm limit is safer for the sources.

4. RSI systems employ contracted water de-ionization services. Prior to exchanging the ion exchange columns, they will be checked with survey meters for levels above background. When excessive levels of irradiation are detected on the resin beds, the facility will be shutdown. The resin beds will be placed in shielding casks or otherwise shielded and removed for commercial waste disposal. Standard methods generally following 18.2 and 18.3 for identifying and removing the leaky source will be employed.

5. RSI typically uses swimming pool type filters for removing accumulated dirt and debris from the bottom of the pool. The filters shall be constantly surveyed for any increased radiation levels during vacuum cleaning operations.

All vacuuming tools will be [illegible] and filled with water prior to hooking up to the pump. Upon removal they are checked with a survey meter for excess radiation.

ANSI Section 11

1. Yes

ANSI Section 12

1. Yes

ANSI Section 13

1. Yes

ANSI Section 14

1. Yes, except for the following:

   a. RSI facilties are never operated while unattended. When not in operation, the source is lowered to the bottom of the pool and the area and building are secured.

   b. The following information is not pertinent and is stored in the office administrative area and not in the control room.

      * name and address of irradiator manufacturer (RSI)

      * model and serial number of irradiator (RSI design)

      * ANSI Compliance designation "N43.10-1984"-Georgia. License confirms compliance

      * name and address of source manufacturer(s)

      * model and serial numbers of all sources

      * type of radionucleide involved and total activity with date of measurement.

      * maximum design activity (nominal capacity) of the irradiator

221

2. Yes

3. Yes

4. Yes

ANSI Section 15

1. Yes

ANSI Section 16

1. Yes

2. Yes. An external wipe test of the external surface of the shipping container will be performed to detect gross contamination.

3. The procedure in Appendix A is followed. No survey meter will detect 0.005 uCi. They will however indicate a low level leak. RSI uses a counting method in conjunction with the survey meter which is a more accurate technique. The Xetex meter or any other will probable detect the presence of about 0.5 uCi.

These checks are secondary checks on the supplier who certifies the absence of contaminent (-0.005 uCi) on the sources.

4. Yes

5. Historically contamination wipe test have not been required in this type of facility where only doubly encapsulated sealed sources are employed. The dispersibility of radioactive materials out of these forms has been accepted to be highly unlikely by regulatory bodies, and contamination wipe tests have not been required. Semi-annual test are conducted on the pool water to check for leaky sources.

ANSI Section 17

1. Yes — check list [illegible] list

2. Yes

3. Yes

4. Yes

ANSI Section 18

1. The procedures of 18.2 will be generally followed for removal of a damaged, leaking or suspected leaking source.

2. The procedures of 18.3 will be generally followed for disposal of contaminated material.

I expect to receive a letter shortly from the NRC confirming the conditions under which the Cesium-137 WESF capsules may be used in RSI facilities. I will forward a copy to you upon receipt.

I trust that this information will be sufficient to permit the issuance of a license to the Decatur facility. If you have any further questions, please do not hesitate to call me.

Our facility is nearing completion, and we expect to begin shipment of isotope into it early in November. If you foresee any difficulty in this schedule, I would appreciate an immediate phone call.

Sincerely,

Allan Chin
President

AC/tb

223

cc: Tom Fisher
Radiation Sterilizers, Inc.
2300 Mellon Court
Decatur, GA 30035

RADIATION
STERILIZERS
INCORPORATED

November 1, 1984

Mr. Thomas E. Hill
Environmental Radiation Specialist, Sr.
Radioactive Materials Unit
Radiological Health Section
Georgia Department of Human Resources
GMHI Room 425 South
1256 Briarcliff Road N.E.
Atlanta, Georgia 30306-2694

RECEIVED
NOV 1984
RADIO

Dear Mr. Hill,

As per our phone conversation on October 30, 1984, concerning R.S.I.'s request for a temporary license, on or around November 21, 1984, to store Cobalt-60 in our pool until such time as our permanent license is issued, I have listed below our safety, handling and storage procedures that will be followed:

1. All items in our present application concerning radiation safety, receiving and handling procedures will be followed.

2. We have discussed the best method of storing the Cobalt-60 pencils and decided that storing the pencils in our modules and leaving them on the floor of the pool would be best. From a storage safety standpoint, storing the Cobalt-60 pencils in the modules would be the most difficult for any unauthorized person to try to remove from the pool.

3. All outside doors to the building will be locked and only authorized individuals will be given access keys.

4. All maze doors leading into the cell will be locked and access keys will be controlled by the Radiation Safety Officer.

5. Floor pressure mats and photo-cells will be in place and operational.

6. The water control system including low and high water level alarms will be operational.

7. Roof plug will be replaced in roof after Cobalt-60 is loaded into pool.

Radiation Sterilizers Incorporated, 2300 Mellon Court, Decatur, Georgia 30035/Telephone: (404)981-4077

8. Radiation maze and cell monitors will be in place and operational.

9. All radiation survey meters are calibrated.

10. Alarm system will be in place and operational.

If you have any questions concerning this request please contact me.

Sincerely,

Tom Fisher
General Manager

TDF/chc

0761

RADIATION
STERILIZERS
INCORPORATED

'84 NOV -9 P4:32

November 8, 1984

Mr. James E. Ayer
Division of Fuel Cycle and Material Safety
U.S. Nuclear Regulatory Commission
7915 Eastern Avenue
Silver Spring, MD 20910

Dear Mr. Ayer:

Enclosed are my responses to your inquiries as stated in the letter signed by Bernard Singer dated October 15, 1984.

As suggested all of the requested charges in Appendix A were accomplished through new or replacement pages which were numbered and dated in reference to the August 30, 1983 application.

The responses to the questions raised in Appendix B are given on new pages. As you will notice, I have only responded to those questions which applied to our operation.

226 Certain questions will require responses from the D.O.E., and I have been in contact with Bill McMullen and John Jicha concerning them. A letter from Jicha should be sent to you which should be incorporated into this response, which addresses these concerns.

The D.O.E. letter will cover the testing program and the ultimate return of the capsules to D.O.E. at the end of their useful life.

Because of the uniqueness of this application, licensing has been pursued directly with your office since the Regions and Agreement States have deferred the decision to the NRC Washington office. Our expectation is that the Agreement States of California and Georgia, where we have facilities, will accept you decision.

8504240298 850408
NMSS LIC30
04-19644-01 PDR

Our Atlanta facility which is expected to go on line this month is the first facility designed to accommodate the WESF capsules, and it is our intention to use the Atlanta facility as the demonstration unit. The licensing office in Georgia has been notified of this intention as well as the D.O.E.

We anticipate that the Columbus, Ohio facility will be the second RSI plant to utilize the WESF capsules.

I trust that these responses in conjunction with the forthcoming letter from the D.O.E. will be sufficient to finalize the approval of this submission.

Sincerely,

Allan Chin

Allan Chin
President

AC/tb

'84 NOV -9 P4:32

Responses To Comments in Appendix A

Reference: October 15, 1984 Letter Signed by Bernard Singer

The attached pages should be substituted in the August 30, 1983 application. All changes were made to include the use of Cesium-137 in the Illinois and Ohio RSI facilities, as suggested in the referenced letter.

New pages were designated by small case letters following the page in the application to eliminate the need for a total page re-numbering, i.e. 37a, 37b, etc.

228

Attachment
Application for Byproduct Material License
Item No. 8 A-D

The only isotopes to be used in RSI licensed facilities in Schaumburg, IL and Westerville, OH are Cobalt-60 and Cesium-137. Only USNRC approved sources will be used. Our major sources for Cobalt-60 isotope sources are the Atomic Energy of Canada, Limited, AECL, Neutron Products, or the U.S. Department of Energy.

The Cesium-137, in the form of WESF capsules, will be obtained from the USDOE.

In any case, only USNRC approved source configurations will be used, and approval confirmed with the USNRC prior to purchase. All source elements will be doubly encapsulated in stainless steel.

Ref. Section No. 8 "Source Control System"

C 121

Attachment
Application for Byproduct Material License

Item No. 13a

The RSI Schaumburg, IL facility consists of a single building located at 711 East Cooper Court, Schaumburg, IL 60195. At the time of construction, this site was located in a new development, and did not have buildings on any of the adjoining lots.

The RSI Westerville facility consists of a single building located at 305 Enterprise Drive, Westerville, OH 43081 in the Green Meadows Corporate Park. At the time of construction, this site was located in a new development, and did not have buildings on any of the adjoining lots.

The only restricted area of both facilities will be the maze and gamma cell. The shielding was designed to provide less than 0.25 mR/hr at all external surfaces with a 10 MCi cobalt-60 source loading. RSI does not expect the maximum source loading to exceed 5 MCi of cobalt-60 in either facility. The shield will be capable of shielding up to 70 MCi of cesium-137, but only 35 MCi maximum are anticipated.

Ref. Section No. 5 "Biological Shield Calculations"
Section No. 14 "Property Description"

30

Attachment
Application for Radioactive Material License

Item No. 13c

This system utilizes a maze to permit the continuous passage of material into and out of the gamma cell. The maze was designed to have less than 0.25 mR/hr flux at the entrance for a 10 MCi cobalt-60 source loading. This design will also shield up to 70 MCi of cesium-137 to meet this requirement.

The entire shield for the maze and gamma cell is a poured concrete structure. The source storage pool in the floor of the gamma cell is 23' deep and made from stainless steel.

This facility utilizes four source racks that are stored at the bottom of the 23' deep storage pool when not in use. Electric winches on the roof of the gamma cell raise the source racks until they are centrally located in the gamma cell when product is to be processed. The penetrations through the roof for the source rack guide cables (4) and lifting cables (2) are lead shielded to eliminate scatter through the roof penetrations.

The entire conveyor system including product carriers and re-usable totes are all made from metal. There are no flammable materials within the cell other than the processed product contained within the metal totes.

The gamma cell is furnished with a smoke detection system located in the exhaust vent which, when activated, will shut down the ventilation fans, the conveyor system, and lower the source racks to the bottom of the pool. There is also a water sprinkler system within the gamma cell which will automatically turn on when the temperature in the cell exceeds the pre-set limits of the sprinkler heads.

Ref. Section No. 1 "General Description of Facility"
Section No. 2 "General Description of Conveyor and Material Flow"
Section No. 3 "Gamma Cell Safety System"
Section No. 5 "Biological Shield Calculations"
Section No. 8 "Source Control System"

Attachment
Application for Radioactive Material License

Item No. 13d

The RSI facility utilizes standard power and free conveyor components to transport product through the gamma cell. This system utilizes a zero pressure accumulation system within the cell. Three-tiered carriers are used to transport the product through the cell.

Each tote is loaded onto the bottom shelf and traverses the cell. Upon leaving the maze, the totes are automatically elevated to the second shelf and traverse the cell a second time. Upon leaving the maze, the totes are automatically elevated to the top shelf for a third pass through the cell, after which they are transferred off the carrier to a conveyor belt which transports them to the finished goods area.

There is no transfer of material within the gamma cell. All transfers from shelf to shelf are accomplished external to the maze where they are readily monitored. This feature adds significantly to system reliability since the major problem area in these systems is in the tote transfers. Most other systems attempt to make these transfers within the cell where any jam will result in a system shutdown before corrective action can be taken.

Cobalt-60 source elements are loaded into standard modules, which hold 10 elements in a flat array. From this point on, source inventory will be at the module level thereby reducing accounting by a factor of ten. Cesium-137 WESF capsules are loaded directly into tilt out containers in the source racks.

132

The source modules, rack, and all associated cables will be stainless steel. The main rack cables will be prestretched to minimize positioning errors with time.

The electric winches position the racks using built-in limit switches. They are designed to lower the sources by gravity whenever there is a power failure.

Attachment
Application For Radioactive Material License

Item No. 13e

The cobalt-60 source elements are placed into stainless steel modules, which are subsequently placed into a stainless steel source rack. The cesium-137 source elements are placed directly into tilt out containers in the source racks. The racks are positioned by stainless steel guide cables at either end to minimize lateral sway. The guide cables pass through the roof and are tensioned above.

A steel cage is built around the source racks to protect them from the product carriers. The distance between the source rack and the product carriers is approximately 12" which is considerably more than other facilities where this distance is typically 2" to 3". This distance substantially decreases the possibility of any interaction between the source rack and other elements of the system, thereby decreasing the probability of damaging the sources in the facility.

The product carriers are hung from an overhead track and the bottoms are aligned with floor guides as required to prevent lateral movement.

All product is contained within metal totes on the product carrier thereby preventing cartons from being dislodged and damaging the sources.

The main conveyor drive is equipped with an electronic motion monitor which prevents excessive forces to be exerted in the event of a conveyor jam. The motor is also reversible such that the conveyor can become unjammed by reversing the drive.

Ref. Section No. 2 "General Description of Conveyor and Material Flow"
Section No. 7 "Design Safety Analysis"
Section No. 8 "Source Control System"

Attachment 2
Application for Radioactive Material Storage

Item No. 12a

The biological shields for the RSI Schaumburg and Waterville facilities were based on a similar design used for the Tustin, CA facility. Only background readings have been recorded at the 1.5 MCi source loading level. The shielding has been designed to provide less than 0.25 mR/hr at all external surfaces with a 10 MCi cobalt-60 source loading. This shield will be more than adequate to shield up to 70 MCi of cesium-137.

Ref. Section No. 3 "Hot Cell Safety System"
Section No. 5 "Biological Shield Calculations"

Attachment
Application for Radioactive Material License

Item No. 14

The isotope racks have been designed for many years of operation before their capacity is filled. At that time, in order to maintain operating levels, the sources with the lowest activity will be removed and new high activity sources added.

Each new cobalt-60 source represents typically 6,000 to 10,000 curies. Each new cesium source represents typically 40,000 to 60,000 curies.

Spent isotope in all cases will be returned to the supplier for disposal.

Ref. Section No. 8 "Source Control System"

Description of the RSI Gamma Facility

RSI facilities are designed to sterilize prepackaged medical device products for the health care industry utilizing either a controlled cobalt-60 or cesium-137 source. The basic components consist of a biological shield, a source system, a safety system, and a conveyor system for transporting the material through the cell. The system is highly automated and controlled by a Texas Instruments programmable controller.

In all cases, the biological shield is designed to meet the requirements of a non-controlled area, with radiation emission rates less than 0.25 mR/hr. It consists of a concrete cell and an entrance maze to allow access by a continuous overhead conveyor. A deep water pool below floor level is used for isotope storage. A detailed description of the biological shield is presented in Section No. 5.

The cobalt-60 and cesium-137 source elements are generally doubly encapsulated, welded stainless steel pencils. Typically the cobalt-60 sources would be AECL C-188 source elements, although similar sources could be used from other isotope vendors. The cesium-137 sources would be typically in the form of WESF capsules supplied by the USDOE. These sources are delivered to the RSI facility in DOT-approved shipping casks from the isotope suppliers.

236

Professional crane operators transfer these casks from truck trailers to the bottom of the deep storage pool via an opening in the roof of the gamma cell. The opening is normally shielded with either a steel or concrete plug. The source elements are removed from the cask and loaded into the source racks while under the protective layer of water.

When cobalt-60 sources are used, up to ten source elements are loaded into a module prior to transfer to the storage racks. The cesium-137 sources are loaded directly into the racks. The facilities utilize two source racks each, the Schaumburg racks are 15 feet long, and the Westerville racks are 12 feet long. Stainless steel guide wires are used on either end of the source racks to control

their positions. Electric winches, located on the roof of the gamma cell, raise and lower the racks with limit switches controlling the vertical position of the source racks. In the event of an electrical failure, the winches will automatically lower the sources to the bottom of the pool using gravity and a friction clutch.

When the facility is in use, the source racks will be centered vertically on the product carriers. Access to the room is obtained by lowering the source racks to the bottom of the pool.

The storage pool is 23 feet deep, 23 feet long, and 6 feet wide in Schaumburg, IL. The pool in Westerville is 23 feet deep, 18.5 feet long and 6 feet wide. They are constructed of reinforced concrete with an 0.125-inch thick stainless steel liner. The water in the pool will be de-ionized and filtered by circulating it through a water treatment system located adjacent to the cell. The level in the pool is controlled within preset limits with abnormally high and low level warnings. All penetrations in the pool lining are within the top 12 inches.

The components within the pool are constructed of stainless steel to minimize corrosion. Some of the external plumbing will be plastic.

The safety system has been designed to meet or exceed all of the requirements for facilities of this type. A detailed description of the safety system is given in Section No. 3.

Material to be processed is conveyed through the cell on three-tiered carriers supported by an overhead power and free conveyor system. Product is loaded into metal tote boxes which in turn are loaded onto the bottom shelf of the three-tiered carrier. To obtain maximum dose uniformity to the product, each tote passes through the radiation cell three times, once at each shelf level. The totes are automatically elevated one level after each pass through the cell. After the third pass, they are automatically removed from the carrier and transported to the unloading area. Refer to Section No. 2 for a detailed description of the conveyor operation.

The design of the Schaumburg facility was performed by the architectural firm of Baranyk-Popovych Associated, 710 Higgins, Park Ridge, Illinois 60068 (312-693-5757). The

30,000 square foot facility was designed and built to meet all local structural and seismic requirements.

The design of the Westerville facility was performed by the architectural firm of John Cathers, 6877 North High Street, Worthington, Ohio (614-885-2794). The 20,000 square foot facility was designed and built to meet all local structural and seismic requirements.

238

Biological Shielding Calculations

The biological shields for the RSI Schaumburg, IL and Westerville, Ohio facilities were designed to provide less than 0.25 mR/hr dose rates at all external surfaces, and at the entrance to the maze, with a 10 megacurie cobalt-60 source or a 70 megacurie cesium-137 source loading. During operation, the sources are stored in two vertical source racks centrally located in the gamma cell.

When not in use, the racks are lowered to the bottom of a 23 foot deep stainless steel tank filled with water.

Conservative design criteria were used throughout. Actual field checks of radiation levels in and around other RSI facilities, designed to similar criteria, have shown effectively zero radiation leakage with cobalt-60 source loadings up to 1.6 megacuries.

The cell and maze design are shown in Drawing Nos. RSI 2-100 and RSI 2-101 for Schaumburg and Drawings Nos. 502-600 and 502-601 for Westerville.

All calculations and layouts have been checked and approved by Mr. Eugene Tochilin, CHP, Certificate No. 60-166. Calculations are provided only for 10^7 curies of cobalt-60. The shielding thicknesses required for cesium-137 are about 70% of the thicknesses required for cobalt-60. This calculation therefore represents the worst case condition.

The following assumptions were made for these calculations:

1. The Co^{60} activity will be 10^7 curies or less.

2. A nominal exposure rate of 1.2 R/hr at one meter per curie of activity has been used. For shielding calculations, the entire activity is taken to be a point source central to the source racks.

3. A self absorption factor has been applied for radiation transmitted through the roof and through the end walls. A factor of 1/4 has been used.

cables to be relieved in the unlikely event that a rack jam does occur, thereby increasing the chances of dislodging and freeing the jam. Rods may also be run down the cable guide openings in the roof to assist in freeing the rack if necessary.

To further assure that the product carrier does not contact the source racks, a metal protective cage is built around each source rack. The conveyor drive cannot overdrive in the event of a jam because of a built-in jam detector. The drive is also reversible which allows jamming pressures to be relieved.

Source Carry Out

Provisions have been made to prevent the improbable event of a source being carried out by the carrier from the cell to the loading area. In order for this event to occur, the following must happen: The source must be dislodged from the source module contained in the source rack, bridge the 12" separation to the carriers, and attach itself to the carrier which presents a relatively smooth surface to the sources. However, if this does happen, it will be detected by the radiation detector located in the middle of the maze which will stop the conveyor and lower the source rack to the bottom of the pool. All personnel will be excluded from the maze, and the RSO will take full charge to formulate the steps necessary for the safe removal of the source of radiation.

Source Break in the Pool - Cobalt-60

If a cobalt source ruptures due to any reason, the cobalt pellets would fall into the pool. Some corrosion product radioactivity might be released to the pool water which would be detected by monitoring at the water treatment area and through pool water samples. De-ionizing columns would be used to remove the soluble contaminants from the pool water. The cobalt pellets could be removed with magnets or suction devices under the direction of the RSO and the source vendor. These would be loaded into a cask and returned to the vendor for further processing or disposal.

detector, and if either is activated, the source will be lowered, the conveyor stopped, and the ventilation fans turned off.

Source Leak - Cesium-137

The probability of a leak in a WESF capsule is far less than for a cobalt-60 source. The major reason being that the WESF encapsulations are each 0.136" thick compared to 0.020" to 0.030" thick encapsulations for cobalt-60. The cesium is in the form of a fused cesium chloride which is water soluble. Tests have indicated that the diffusion of cesium chloride through small holes in double encapsulations is slow. Monitors at the ion exchange column will detect low level leaks in the capsules. If this occurs, ion exchange techniques successfully used to clean up cesium from Three Mile Island will be used to decontaminate the pool water.

The leaky source will be identified and removed and returned to the DOE.

Source Control System

Cobalt-60 Sources

The basic Co-60 source element in this system is typified by the AECL C-188 source rod as shown on the accompanying drawing. Other source elements may also be used as manufactured by G.E., Neutron Products, or other approved encapsulators. Each element will be permanently identified with a serial number and its location in the system will be controlled at all times.

Upon receipt at the facility, up to ten sources are placed into one of the source modules. These modules are permanently identified and contain the sources in a flat array. From this moment on, the sources will not be removed from the module, and the basic inventory control will be at the module level. Control and records will therefore be reduced by a factor of ten

Individual sources are traceable through module loading records, a copy of which is attached. The source position is equivalent to the loading order of the sources into the module. As modules are shifted within the source racks, their new locations are noted on the source control sheet.

The source modules are loaded into channels within the source racks. The RSI system utilizes two source racks with each rack containing approximately 26 module channels. Each channel is designed to be contain three modules stacked one upon the other.

The maximum cobalt-60 capacity of the Schaumburg system is 1920 sources. The maximum capacity of the Westerville facility is 1560 sources.

All module loading will be controlled by, or under the supervision of, the RSO or an authorized user of the isotope. The following procedure will be generally followed:

Cesium-137 Sources

The cesium source elements will be the WESF capsules produced by the DOE at Richland, WA. A drawing of the WESF capsule is included for reference. Each source will be serialized for identification by the supplier.

The cesium source rack is designed to be used with the WESF capsules exclusively or in combination with cobalt-60 source modules. Drawings 502-584 and 502-585 show the construction of the cesium source racks. The only difference between the Schaumburg and Westerville racks is the length: 15 feet versus 12 feet.

Because of the size and weight (20#) of the WESF capsules, they are handled individually and loaded directly into the source rack. Tilt out modules are used which hold either 6 WESF capsules or two cobalt-60 modules as previously described.

Initial shipments of WESF capsules will be via G.E. type 1500 series casks since these are the only approved casks. As other casks are approved, they will be considered for use.

All source loadings will be performed by or under the supervision of the RSO or an authorized loader of the isotope. The following procedure will be generally followed.

1. Source casks will be delivered to the facility on an open top trailer in approved casks such as the G.E. Series 1500 containers. Survey the cask for excessive leakage upon receipt.

2. Check paperwork to assure that it is in agreement with the purchase order.

3. Remove the heat shield.

4. Perform leak test on the cask by running water through the cavity and monitoring the water. If activity is detected, notify the vendor and re-seal the cask. If no activity is detected, proceed.

5. Leave vent and drain plugs off to allow the cavity to fill as the cask is lowered into the pool. Retain the plugs for installing after the sources have been removed.

6. Unbolt cask from shipping skid.

7. Loosen, but do not remove, cover bolts.

8. Attach cable for cover removal.

9. Attach the cask sling.

10. Remove the roof plug with the mobile crane rented for the loading operation and place on the roof over one of the shielding walls.

11. Lift the cask with the crane from the truck and lower it slowly through the roof access into the pool in the floor of the gamma cell.

12. Avoid the upper cask vent since steam may be generated and ejected from this opening as the cask is lowered into the pool water.

13. When the cover is 6" above the water level, remove the cover bolts.

14. Continue to lower cask slowly to the bottom of the pool.

15. Unhook the cask sling from the hoist.

16. Hook cover sling onto hoist.

17. Remove cover and check for contamination as it clears the water.

44 18. Place cover on the roof and remove the sling from the crane hoist.

19. Using a long handled, vented hook tool, remove the source cage from the cask and place it on the floor of the pool. Monitor radiation levels at the pool surface.

20. Load sources into the source rack after checking the serial numbers.

21. Document loading on source control sheets.

22. Replace source cages into shipping cask.

23. Re-attach the cask lifting sling.

24. Slowly raise cask.

25. Check cask for contamination as it clears the water.

26. Re-insert drain plug as the bottom clears the water.

27. Place cask on skid and bolt down.

28. Remove drain plug and drain into bucket. Check water.

29. Replace cover and bolt down.

30. Insert top and bottom plugs.

31. Replace fire shield and bolt down.

32. Repeat steps 1-31 for each cask.

33. Remove all radioactive materials labels from the casks.

34. Cover caution tags on casks with shipping labels for return shipment.

35. Replace roof plug.

36. Run survey around facility with sources in the operating position.

37. Take sample of pool water for leak testing.

Source Control Procedure

Source control will be maintained at all times on each WESF source capsule. Data will be maintained on separate control sheets.

Each tilt out module is designed to contain 6 capsules, 3 in each side. Source location will be by module, by side, by position. Modules are numbered from the top left corner from left to right and top to bottom. Module sides are designated as left or right. Source positions are 1,2,3 reading from left to right within each side.

Comingled Sources

It is possible that the initial isotope loading into an RSI facility will be exclusively cobalt-60 in order to rapidly get on line. The source racks will be designed as shown in Drawing No. 502-584 and 502-585. The cobalt pencils will be loaded into cobalt source modules which contain up to ten pencils in a flat array. These modules will then be loaded into the tilt out containers in the source rack. Two modules will be loaded per container in the central horizontal row.

Specific RSI facilities will be designated to operate primarily with cesium-137 and others with cobalt-60. When sufficient cesium-137 is loaded into a facility, the initial startup cobalt-60 will be transferred to a licensed RSI designated cobalt-60 facility.

All RSI facilities will operate in a product overlap mode which simplifies the isotope management problem. Whenever long term usage of cobalt-60 and cesium-137 in a single plant is necessary, the cobalt-60 will be loaded into the central horizontal row of the rack.

SOURCE MATERIAL	FORM	LOADING	PERCENT OF THEORETICAL DENSITY BASED ON TOTAL VOID SPACE OF CAPSULE
CESIUM CHLORIDE	MELT-CAST	78 KCi	[illegible]

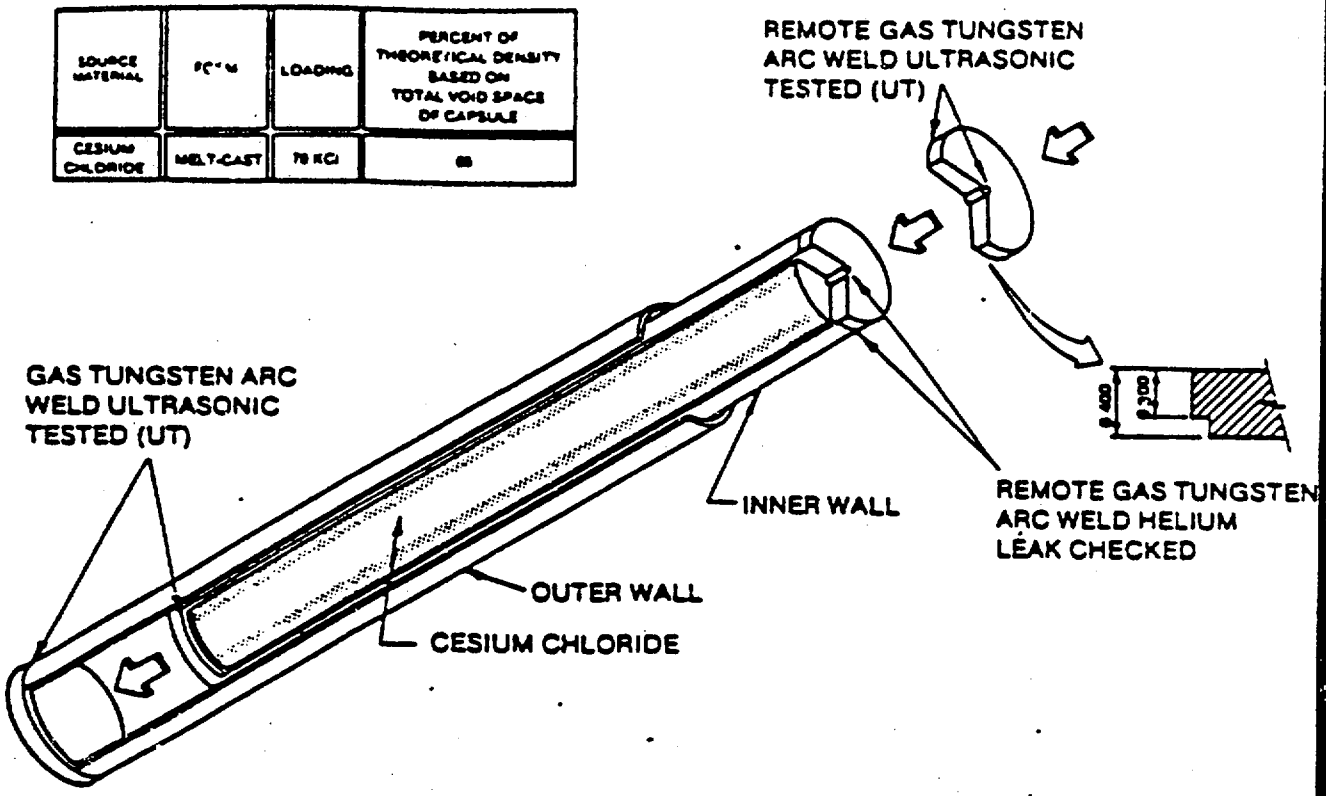

SOURCE MATERIAL	CAPSULE									
	INNER					OUTER				
	MATERIAL	WALL THICKNESS	OUTSIDE DIAMETER	TOTAL LENGTH	TOTAL CAP THICKNESS	MATERIAL	WALL THICKNESS	OUTSIDE DIAMETER	TOTAL LENGTH	TOTAL CAP THICKNESS
CESIUM CHLORIDE	316L STAINLESS STEEL (UT)	0.135 (UT)	2.388	19.725	0.400	316L STAINLESS STEEL (UT)	0.135 (UT)	2.688	20.773	0.400

NOTE: ALL DIMENSIONS ARE IN INCHES

Figure 4

WASTE ENCAPSULATION AND STORAGE FACILITY (WESF) CAPSULE

1500 Series Certification No. 3939 (& I.A.E.A. Certified)
Cask Weight 12,000 Lbs. - 5455 Kgs.
Assembly Weight 15,160 Lbs - 6890 Kgs.
Assembly Drawing No. 106D3870G1
Modes of Transportation - ALL EXCEPT PASSENGER AIRCRAFT
Heat Load at 100°F Ambient 3120 Watts
Fissile Load 300/300/300 Grams at Fissile Class III
Heat Load at 100°F Ambient 600 Watts

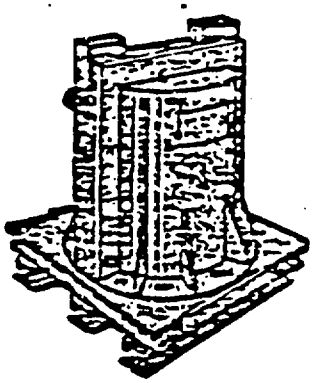

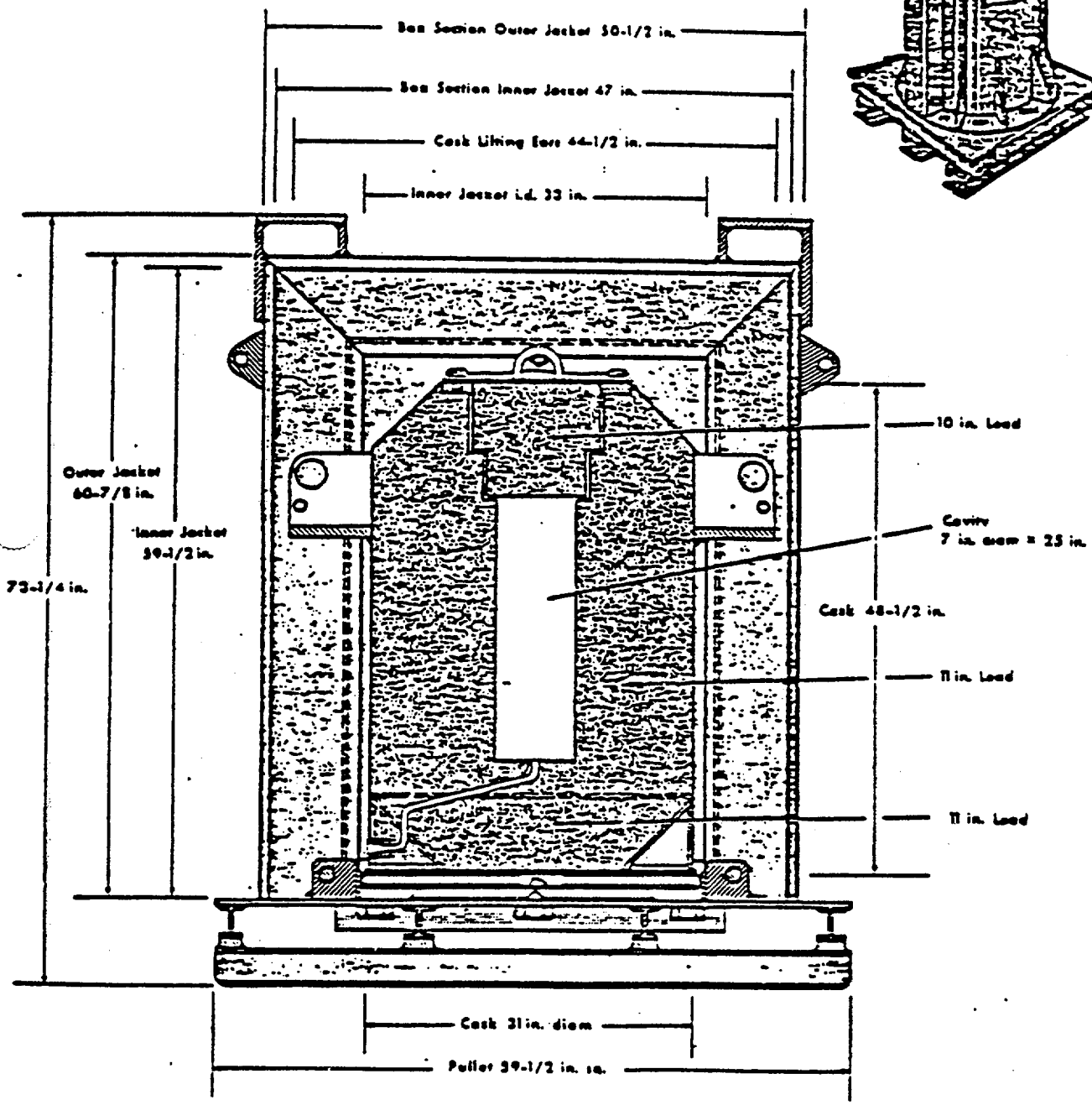

GENERAL ELECTRIC - MODEL 1500 SHIELDED CONTAINER

The water level in the pool is controlled at the sump located outside the cell in the water treatment area, since they are hydraulically connected with a 1" stainless steel pipe. Immersion electrodes in the sump will actuate a solenoid valve on the make-up line to control the pool level within control limits and alarm at abnormally high or low levels

A timer on the make-up solenoid will indicate if excessive amounts of water are being used, which would be indicative of a water leak.

The water chiller is an optional piece of equipment which should be added at high curie loadings. The heat generated from one megacurie of cobalt-60 is 15KW. Since the source is only in the water less than 5% of the time, the heating effect on the water should be minimal.

Water chillers should be considered when cobalt-60 isotope loadings approach two megacuries and when cesium-137 loadings approach six megacuries, where the equilibrium water temperature will be approximately 100 - 110 degrees Fahrenheit.

A pipe from the main water line is connected to the return line which may be used to maintain the pool level in the event of a gross leak. This line is equipped with an anti-siphon valve to prevent inadvertant draining of the pool.

Responses To Comments in Appendix B

Reference: October 15, 198- Letter Signed by Bernard Singer

Item B.1

The statement made in the July 23, 1984 letter, "The interface temperature in my application is not expected to exceed 200 degrees Centigrade", is a correct statement based upon all previous available information. Both actual measurements and analytical calculations support the contention that the surface temperatures in air will be in the range of 80° C to 130° C, which was the basis of my statement. Most of these temperatures were for horizontal capsules in stagnant air. In the RSI application, the capsules will be vertical and the facility ventilated at a rate of 400 CFM. Both of these conditions should result in lower capsule temperatures.

The expressed opinion of PNL scientists is that a 300° C interface temperature is a reasonable safe interface temperature. Additionally the 300° C temperature was specified in Mr. Ayers letter to Mr. Adams dated September 14, 1984.

We feel that the 300° C interface limit is reasonable based upon all existing test data, and would request that this limit be adopted for the RSI applications.

This 300° C limit, if adopted, is so much higher than any measured or calculated temperature for WESF capsules in similar applications, that we do not see the necessity to monitor temperature levels.

The techniques and methods for measuring these temperatures would either have large inaccuracies in the measurement or compromise the safe operation of the facility.

Most measurements and analyses have been on single capsules. An analysis made by Mr. Marvin E. Morris and reported in SAND79-2240 reported that the effect on temperature of any capsule is virtually unaffected by adjacent capsules as would exist in a source rack.

Based upon the above arguments, we request that the maximum interface temperature level be increased to 300° C and the requirement for measuring and monitoring the capsule temperatures be deleted unless subsequent design or operational changes could result in conditions where higher temperatures would result.

Item B.2

An accumulating counter is incorporated into our system controls

which will indicate at any time the total number of times that the source rack has been lowered into the water storage pool. The 12,000 cycle requirement is well within the capacity of the counter.

Records will be maintained on capsule identification, loading dates, and thermal cycles for each capsule.

Item B.3

This item is covered in a letter from the USDOE. The test plan will be described by DOE. RSI agrees to cooperate with DOE in the selection and return of the test capsules to the DOE designated laboratory.

Item B.4

This item is covered in a letter from the USDOE.

Item B.5

This item is covered in a letter from the USDOE.

Item C.1

Two types of capsule failure are anticipated. The first is a small leak due typically to a weld failure or crack. In this situation, the problem will be detected through early warning gamma or beta detection of the pool water. Leakage rates will be low enough to permit personnel access to the shielded cell with the sources in the water storage position.

Ion exchange resin columns, shielded by casks or concrete will continually remove activity from the water while operations to identify the leaking source are in process.

Techniques similar to those developed by the DOE at Richland for detecting and removing leaky sources will be employed. Each capsule will be loaded into a sealed closed loop system filled with water. The re-circulating water will be monitored for activity buildup indicating a leaky source.

Once the leaky source is identified, it will be sealed into a container and loaded into a shipping cask for return to DOE. The second type of capsule failure would be termed catastrophic and result in radiation levels above the storage pool which would prevent personnel access. This type of failure would typically be caused by mechanical failure of both capsule walls, thereby exposing large quantities of CsCl to the pool.

In this situation, shielded ion exchange columns would be used external to the cell to remove the activity from the water. The contaminated exchange resins would be treated as solid waste and buried in commercial sites.

When the activity in the cell has been reduced to safe levels, the procedures described for a small failure will be followed.

In both instances the facility will be decontaminated as necessary prior to resumption for operation.

Item C.2

Continous monitoring of the resin cleanup columns will be performed to determine when they must be removed and replaced. Gamm monitors and survey meters will be used for this purpose.

Item C.3

Contaminated resins will be removed as solid waste and shipped commercial burial sites. Typically the resin columns will be cast into concrete which serves as the shielding and shipping container.

Item C.4

Reference C.1 above.

Item C.5

Reference B.1 above. Generally if a condition occcurs which wou indicate that an interface temperature exceeding 300 C has been reached, DOE and NRC will notified for disposition.

Item D.1

The WESF capsules will be leased to RSI. The conditions of the lease require that RSI return them to DOE at the end of life, as determined by DOE.

The conditions covering the return of the capsules is covered i a letter form the USDOE.

Item D.2

This item is covered in a letter from the USDOE.

November 14, 1984

Allan Chin, President
Radiation Sterilizers, Inc.
300 Sand Hill Road
Building #4-245
Menlo Park, California 94025

Dear Mr. Chin:

This is to acknowledge receipt of your letters dated October 31, 1984. With respect to the licensing of cesium, when the U. S. Nuclear Regulatory Commission has completed its review of the WESF capsules and RSI has demonstrated that the facility in Decatur, Georgia can operate with a good compliance history, we will entertain an amendment request for the use of Cesium 137 in this facility.

Our office is still reviewing your letters dated October 31, 1984 with respect to other items and will be requesting additional information and clarifications in the near future.

Sincerely,

for Thomas E. Hill
Environmental Radiation Specialist, Sr.
Radioactive Materials Unit
Radiological Health Section

TEH/ck

cc: Tom Fisher, General Manager
Radiation Sterilizers, Inc.

December 3, 1984

Mr. Thomas E. Hill
Environmental Radiation Specialist, Sr.
Radioactive Materials Unit
Radiological Health Section
Georgia Department of Human Resources
G.M.H.I. Room 425 South
1256 Briarcliff Rd. NE
Atlanta, Georgia 30306-2694

Dear Mr. Hill:

As per our meeting on November 30, 1984, I have listed below items which you requested RSI to comply with in order to obtain a storage license for Cobalt-60 at its Decatur facility. The items listed below cover the safety system and security to be used for storage of the Cobalt-60.

1. All exterior doors to warehouse and office area will be locked. Keys will be issued to authorized individuals by R.S.O.

2. The two (2) double doors between conveyor room and shipping/receiving area of warehouse will be locked.

3. The keys for the double doors in item #2 will be controlled by the plant R.S.O.

4. The tote conveyor access ports to conveyor room from the shipping/receiving area will be secured during non-working hours by installing a ultrasonic motion sensor. The ultrasonic motion sensor will monitor any movement in the tote conveyor access port area and will activate the alarm system if the area is violated.

5. The product entrance doors will be secured the following way: a.) When the product entrance doors are in the closed position there is 80 psi air pressure on the air cylinder holding the door closed. b.) When the doors are in the closed position the only way they can be opened is by inserting the master key into the safety systems panel next to the door and turning the door lock off, which opens the sliding door, only if the GM Tubes inside the cell detect no radiation. c.) The master key will be controlled and used by the plant R.S.O.

6. Once the product entrance doors are closed the master key will be used to activate the safety systems panel. When the safety systems panel is activated the photo cells, pressure mats and ultrasonic motion sensors inside the restricted area of plant are also activated. Only with the master key can the safety systems panel, the photo cells, pressure mats and ultrasonic motion sensors be deactivated.

7. The electrical breaker cabinet in the warehouse that controls the lighting inside the cell will be turned off and the cabinet locked. Keys to the breaker cabinet will be controlled by the plant R.S.O.

8. "Caution Radioactive materials", sign will be installed at the entrance of the restricted area at the cell maze.

9. Arrangements have been made with the Dekalb County Police Department to patrol the R.S.I. plant during non-working hours. A list of R.S.I. personnel and phone numbers will be made available to the police. If alarms do go off police officals will be instructed to call plant R.S.O.

10. The water control system including water make up and high/low level alarms will be operational.

If you have any questions concerning this letter, please contact me.

Sincerely,

Tom Fisher
General Manager

TDF/cc

Georgia Department of Human Resources
Radiological Health Section

RADIOACTIVE MATERIAL LICENSE

ursuant to the Georgia Radiation Control Act No. 936 (H. B. 162) 1964 and the Georgia Department of Human Resources Rules and Regulations, designate chapter 290-5-23, and in reliance on statements and representations heretofore made by the licensee designated below, a license is hereby issued authorizing such licensee to transfer, receive, possess, and use the radioactive material(s) designated below; and to use such radioactive materials for the purpose(s) and at the place(s) designated below. This license is subject to all applicable rules and regulations of the Georgia Department of Human Resources and orders of the Radiological Health Section, now or hereafter in effect and to any conditions specified below.

License (1. Name and 2. Address)	
Radiation Sterilizers, Inc. 300 Sand Hill Road #2-190 Menlo Park, California 94025	3. License Number GA. 868-1 4. Expiration Date December 31, 1989 5. Area Code 404 Telephone No. 981-4077

Radioactive Material (Element and Mass Number)	7. Chemical and/or Physical Form	8. Maximum quantity licensee may possess at any one time
A. Cobalt 60	A. Sealed sources (AECL Model C-188, Types 1,2, 3, or 4)	A. 500,000 curies (No single source to exceed 12,000 Curies)

Authorized Use

A. For possession and storage in RSI's source storage pool located at 2300 Mellon Court, Decatur, Georgia. The sources shall be stored in and not removed from the AECL Model F 234 shipping cages.

Conditions:

10. Radioactive material may be used only at Radiation Sterilizers Inc., 2300 Mellon Court, Decatur, Georgia 30035.

11. The licensee shall comply with the provisions of Georgia Department of Human Resources Rule 290-5-23-.03, "Standards for Protection Against Radiation," and Rule 290-5-23-.07, "Notices, Instructions and Reports to Workers; Inspections."

	Date	For the Georgia Department of Human Resources
of Pages	December 7, 1984	BY

653 (Rev. 3-82)

CONDITIONS (Continued)

12. Radioactive Material in the AECL Model F 234 shipping cages shall be removed from the shipping cast and placed in storage by, or under the supervision and in the physical presence of Allan Chin, Bruce C. Meyer, Thomas W. Hurley, or Barry P. Fairand.

13. The Radiation Safety Officer in this program shall be Mr. Tom Fisher.

14. This license does not authorize the loading of the radioactive sources into the source modules or the source racks.

15. Sealed sources containing radioactive material shall not be opened by the licensee.

16. A.
Each sealed source containing radioactive material shall be tested for leakage and/or contamination at intervals not to exceed six months. In the absence of a certificate from a transferor indicating that a test has been made within six months prior to the transfer, the sealed source shall not be put into use until tested.

B.
The test shall be capable of detecting the presence of 0.005 microcurie of radioactive material on the test sample. The test sample shall be taken from the sealed source or from the surfaces of the device in which the sealed source is permanently mounted or stored on which one might expect contamination to accumulate. Alternately, the test shall be capable of detecting the presence of 4×10^{-8} microcuries per milliliter of radioactive material in the test sample. The test sample shall be taken from the source storage pool or from a sampling tap immediately prior to the particulate filters. Records of leak test results shall be kept in units of microcuries and maintained for inspection by the Department.

C.
If the test reveals the presence of 0.005 microcurie or more of removable contamination, the licensee shall immediately withdraw the sealed sources from use and shall cause them to be decontaminated and repaired or to be disposed of in accordance with Department regulations. A report shall be filed within 5 days of the test with the Radiological Health Section, Georgia Department of Human Resources, Atlanta, Georgia, describing the equipment involved, the test results, and the corrective action taken.

D.
Analysis of tests for leakage and/or contamination shall be performed by Helegson Nuclear Services or by other persons specifically authorized by this Department, the U.S. Nuclear Regulatory Commission, or an Agreement State to perform such services.

FOR THE GEORGIA DEPARTMENT OF HUMAN RESOURCES

December 7, 1984

BY

Form 3854

RADIOACTIVE MATERIALS LICENSE
SUPPLEMENTARY SHEET

LICENSE NUMBER 868-1

CONDITIONS (Continued)

Safety features of the irradiator (which includes but is not limited to entry control devices, intrusion detection devices, warning systems, and controller logic which governs any safety device or system) shall not be altered, modified, replaced or in any way changed without written approval of the Department. The licensee shall immediately report to the Department by telephone or telegraph the failure of any safety feature (device, system, or circuit) of the irradiator. A written report of such failure shall be filed with the Department within 10 days after the failure, describing the failure, conditions under which the failure occured, the suspected cause (s) of the failure, and action taken or proposed to correct the failure and prevent recurrence.

18. The irradiator cell and maze shall be checked using a physical radiation detection instrument to assure that prior to the first individual's entry into these areas, the radiation level from the source in these areas is below that at which it would be possible for an individual to receive a dose in excess of 100 millirem in any one hour.

19. Except as specifically provided otherwise by this license, the licensee shall possess and use radioactive material described in Items 6, 7, and 8 of this license in accordance with statements, representations, and procedures contained in;

    A. Application dated March 9, 1984 and signed by Allan Chin, President;

    B. Letter with attachments dated August 21, 1984 and signed by Allan Chin, President;

    C. Letters dated October 4, 1984 and October 31, 1984 and signed by Allan Chin, President; and

    D. Letters dated November 1, 1984 and December 3, 1984 and signed by Tom Fisher, General Manager.

    The Georgia Department of Human Resources' Rules and Regulations for Radioactive Materials, Chapter 290-5-23 shall govern the licensee's statements in applications or letters, unless the statements are more restrictive than the regulations.

FOR THE GEORGIA DEPARTMENT OF HUMAN RESOURCES

BY _____

DATE December 7, 1984

DEC 10 1984

Distribution:
Docket File
NMSS R/F
FCMC R/F
FCAF R/F
BSinger
JJicha, DOE
G. Tingey
RECunningham
DWoodruff, Region II
DANussbaumer, SP
WJAdam, Region III
JEAyer

bcc:

Radiation Sterilizers, Inc.
ATTN: Mr Allen Chin, President
3000 Sand Hill Road
Building No. 4-245
Menlo Park, California 94025

Gentlemen:

The purpose of this letter is to respond to yours of November 8, 1984 related to the amendment of License 04-19644-01 which would authorize the use of WESF capsules in your Schaumburg, Illinois, and Westerville, Ohio, facilities. In that letter you stated that you intend to use the WESF capsules in a demonstration at your Atlanta, Georgia, facility. Since the State of Georgia is an agreement state, and thereby has independent licensing authority, you must apply to its offices for the appropriate license. Because you intend to use your Atlanta facility as the WESF capsule demonstration for dry-irradiation/wet storage, we will take no further action on your outstanding request for amendment to License 04-19644-01.

If you have any questions pertaining to the above, please feel free to call James E. Ayer (301/427-4205) or me.

Sincerely,

Bernard Singer, Chief
Materials Certification and
Procedures Branch
Division of Fuel Cycle and
Material Safety

cc: Robby G. Rutledge, Director
Radiological Health Section
Department of Human Resources
1256 Briar Cliff Road, Room 425 South
Atlanta, Georgia 30306

8504240183 850408
NMSS LIC30
04-19644-01 PDR

FCAF	FCMC					
yer:flb	BSinger					
/4205						

STERILIZERS
INCORPORATED

December 14, 1984

Mr. Bernard Singer
U.S.N.R.C.
Willste Building
7915 Eastern Avenue
Silver Springs, MD 20910

Dear Bernie:

This letter requests that you continue action relative to my recent November 8, 1984 letter related to the Amendment of License No. 04-19644-01.

Due to changes in our plant schedules, RSI will use the Westerville, Ohio facility as the demonstration unit for the WESF Capsules.

I apologize for any confusion which I may have caused, and I will be contacting Jim next week concerning this amendment.

Sincerely,

Allan Chin

Allan Chin
President

AC/jp

'84 DEC 19 P4:06

8504240199 850408
NMSS LIC30
04-19644-01 PDR

Radiation Sterilizers, Inc., 3000 Sand Hill Road, Bldg. #4-245. Menlo Park, CA 94025 (415) 854-2800

es G. Ledbetter, Ph.D./Commissioner

RADIOLOGICAL HEALTH SECTION

G.M.H.I., Room 425 South/1256 Briarcliff Rd., N.E./Atlanta, Georgia 30306-2694

December 26, 1984

Allan Chin, President
Radiation Sterilizers, Inc.
300 Sand Hill Road
building #4-245
Menlo Park, California 94025

Dear Mr. Chin:

This letter is a result of our visit to your Decatur, Georgia facility on December 12, 1984 at which time you requested that we provide you with specific detailed information of the actions we wanted you to take prior to our granting RSI an operating license. In order to expedite the flow of information necessary to grant an operating license and consistent with our letter to you dated November 14, 1984, this letter and the evaluation of your facility applies only to the use of Cobalt 60 at the Decatur facility. The length of this letter and previous letters is due to the lack of specific detailed information provided with the application which would have allowed the evaluation of the safety of the design.

The following additional safety equipment will be required for amending the license of the Decatur, Georgia facility:

1. In application for Radioactive Material License dated March 19, 1984, attachment, reference U.S.N.R.C. Regulatory guide no. 9, item no. 13g you stated "The safety system for the facility has been designed to be in compliance with the requirements of 10 CFR section 20.203 (c) (6) and (7)." 10 CFR section 20.203 (c) (6) (i) requires that each entrance or access point be equiped with entry control devices which will function automatically to prevent any individual from entering the area when radiation levels exist in excess of 500 rems in one hour at one meter from the sources. RSI's Decatur, Georgia facility has only a single device (pneumatically controlled door) at each access point. 10 CFR section 20.203 (c) (6) (ii) requires that additional control devices be installed such that upon the failure of the entry control devices to function as required in 20.203 (c) (6) (i) radiation levels within the cell, from the sealed sources, shall be reduced below that at which it would be possible for and individual to receive a dose in excess of 100 millirems in one hour. Since it takes approximately one minute and twenty seconds for the sources to be returned to the fully shielded position when the pressure mats or the electric eyes are tripped, these devices do not meet the requirements of 20.203 (c) (6) (ii). Describe in detail how RSI plans to meet the requirements of 10 CFR 20.203 (c) (6) (i) and (ii).

2. Install electrically operated locks on both air operated irradiator cell entry doors. These locks shall operate by gravity to lock the doors when the doors are in the closed position. Electric power shall only be necessary to unlatch the lock when entry is permitted. Lock installation shall be accomplished so that no access to the lock control or latch will permit defeating the lock. When the lock is energized to permit the door to open, it shall disrupt the hardwired safety circuit causing system shutdown and prohibit raising of all source racks. The design objective of this requirement is that the doors will not permit personnel entry until the source racks are in the full shielded position, the radiation level is below 100 mr/hr as required in Rule 290-5-23-.03 and the pool water level is within the normal limits.

3. Install a full physical barrier to prevent any personnel entry to the restricted area from above product and personnel entry and exit doors and from the maze roof area. These barriers shall be terminated at the building walls.

4. Install a radiation monitor in the Gamma cell which will operate continuously with the sources in both the shielded and exposed position. The instrument installed must have a fail safe function which alarms if the electronics fail. The radiation monitor must also have an adjustable alarm set point to alarm at 100 mr/hr as required by Rule 290-5-23-.03. In the event of either a high or fail alarm, the output signal shall be used to prevent energizing the electric door locks. The failure mode shall be displayed both at the control console and the personnel entry door message display panel.

5. Install redundant audible and visual alarm indicators (lights, horns, sirens, bells). The design objective of this requirement is that it operate only when the primary alarm system has failed. When this redundant system is activated it shall provide indication to the operator that the primary alarm indicators have failed. The existing system shall be altered to provide a continous visual alarm when the source racks are in the exposed position The primary alarm indicator shall be located in the maze as shown on Drawing Number 503-01, dated June 6, 1984 designated as Original Number S 601.

6. Install additional red warning light(s) which are strategically located to be visible from all locations in the gamma cell.

7. Install automatic door closure on personnel emergency egress door.

8. The entire length of the Gamma cell pull cable source starter override switches shall be back highlighted with a highly visible fluorescent marking. The marking shall contain instructions describing the cables purpose.

9. Install a full physical barrier on gamma cell roof to control access to source drive equipment, gamma cell ventilation equipment, electrical control safety equipment, air compressors, and other safety related components.

10. Any malfunction which sets off an alarm indicating an unsafe radiation safety situation that requires the General Manager of RSO to be notified, the alarm shall be received at an off site facility such as ADT or Electro Protective so that the alarm event is recorded off site and that the contract agency notifies the G.M., RSO, or Emergency response personnel.

11. Provide a detailed procedure for the performance of the biological shield survey, including your method of documenting the survey. We require the entire exterior surface area of the biological shield be surveyed without any obstructions in the gamma cell or maze. The maze walls and roof shall also be surveyed to determine if increased radiation levels are present when the cell is filled with product carriers. The exterior surface shall be physically marked corresponding to the survey documentation until the Department has accepted the survey results

12. Permanently install the pressure mat switches. The pressure mat switches shall be covered with a heavy duty rubber mat over the entire area of the pressure mat switches.

13. Install a sealed standpipe over the sanitary sewage drain in the water treatment sump pit. The top of the standpipe shall terminate at a level which is 10 inches above the level of the gamma cell floor.

14. Install a conductivity meter in the water treatment system and maintain conductance at 10 microseimens per centimeter.

15. Provide detailed procedures for the collection and analysis of the source storage pool water for the detection of radioactivity indicating that a source(s) may be leaking. Specify the action level that will require the collection of additional samples to verify the analysis, the minimum detectable level of the analytical equipment and procedures, the minimum samples size, and time frame from sample collection to receipt of the results of the analysis.

16. Provide copies of as-built drawing of the hardwired safety systems, software ladder diagram and address index for the ladder diagram. If this contains proprietary information all information furnished shall be stamped proprietary and the Department guarantees its confidentiality.

17. Provide copies of as-built architectural, electrical and mechanical drawings for all systems having radiation safety implications. Drawings to include but not limited to:
source modules
source racks
rack lifting attachment
cages around source racks
water treatment system
gamma cell
rack hoist systems
If this contains proprietary information, all information furnished shall be stamped proprietary and the Department guarantees its confidentiality.

18. The existing in cell radiation monitor shall be relocated to the water treatment area, strategically located to monitor the filter, demineralizer and drain to the sanitary sewer system.

19. Install an interlock on the gamma cell roof plug to enunciate when it is removed and to prevent raising of the sources from the source rack shielding pool.

20. Install protective shields over all exposed fluorescent light fixtures in the gamma cell.

21. Provide a detailed description and analysis of the following situations:

A. Malfunction of the video display, not involving loss of power, and its effect on safety systems operations. Will this malfunction shut the system down? ie: sources to be returned to shielded position in the pool. If not, describe how the irradiator can continue to operate without compromising safety.

B. A voltage transient affecting computer memory thus compromising the safety system.

C. Malfunction of the computer, not involving power loss, and its effects on safety system operation. Will this malfunction shut the system down? ie: sources to be returned to shielded postion in the pool. If not, describe how the irradiator can continue to operate without compromising safety.

22. Describe the system of management control over the use of the auxillary programmer at the Decatur facility which permits the safety software to be changed. Specify who, how, and when it will be used.

23. When the computer program has to be reentered, provide your procedures for verifying that the safety system software and safety system operation is as approved.

24. Provide a failure mode analysis of all components of the safety chain including the computers. Any failure of any component of the safety chain shall result in a fail-safe condition.

25. Provide your procedure for testing the sensitivity of the pressure mat switches and the frequency for testing the operability of these pressure mats.

26. Provide a detailed description of your method for restricting access to only those persons authorized to critical safety system controls such as radiation monitors, address modules, relays, power supplies, water level monitors, air pressure monitors and controls.

27. Provide a detailed evaluation of the significance of any system whose failure could present a radiation safety problem. These evaluations shall include but not be limited to the following:

A. Failure by any means of the source rack or source modules;

B. Failure of the source rack lifting and/or guide cables;
C. Product carrier falling into the source storage pool;
D. Source shipping cask falling into the pool;
E. Source shipping cask damaging source, source module or source rack;
F. In cell radiation monitor or maze radiation monitor saturated;
G. Ventilation system failure;
H. Grate or grates covering the source storage pool falling into the pool and damaging radiation source(s), source module(s), source rack(s) or the wall(s) and/or bottom of the pool;
I. Radiation source coming out of the source module and/or a source module coming out of the source rack;
J. Failure of the water treatment system; and
K. Handling and disposal of demineralizer resins contaminated with Colbalt 60.

28. Provide your procedures for informing employees (shift supervisor, or General Manager) that someone, either a RSI employee or a contract employee, is working on the roof of the cell and when that individual has left the roof of the cell to assure that the area has been properly secured.

29. Provide documentation of Radiation Sterilizers' arrangements with a local hospital for the treatment of individuals who have potentially received high levels of radiation exposure.

30. Provide your administrative key control procedures for all keys requiring administrative control. This shall include all keys used to gain entrance or access to all restricted or controlled areas, electrical panels, and equipment whose unauthorized access could compromise radiation safety.

31. Provide an analysis of the safety implications if in the event the one inch line from the pool to the water treatment sump pit becomes clogged.

32. Provide a description of all alarms, the meaning or significance of each alarm and the party responsible for responding to each alarm. Such information shall be contained in the operators manual and each employee involved in the product handling process shall be trained to understand the messages conveyed, and to take appropriate predesignated action.

33. Provide a written description of the arrangement for regeneration of demineralizer resins. If the resins are being regenerated commercially, provide your method for statistically sampling the resins and for conducting the analysis for radioactivity. What is the sensitivity of your radioanalysis procedure? The analysis for radioactivity shall be conducted prior to release of the resins to a commercial regenerator for unrestricted redistribution. Concentration of Cobalt 60 shall not exceed 4×10^{-8} microcuries per cubic centimeter of resin.

34. Provide your procedures for documenting certification of training for all employees for whom training is required. Such documentation shall be signed by the training officer conducting the training whether at the Decatur facility or other location.

35. Provide your policy and procedures for delegation of responsibility to any person(s) having responsibility for the management or the use of radiation safety procedures or equipment. Delegation shall be in writing and only to persons equally qualified.

36. Provide a detailed description of the frequency, extent, and documentation of informal surveys. These informal surveys should include surveys of:

A. Water treatment area;
B. Product carriers for contamination;
C. Areas inside the cell where contamination could possibly acccumulate (specify these areas); and
D. Irradiated product for contamination

37. Provide a detailed description of the written documentation of the corporate RSO's audits of the Decatur Georgia facility. The description shall include the frequency of corporate audits, what the auditor will review, what the auditor finds, and the auditor's recommendations and conclusions.

Should you have any questions or wish to discuss this letter in whole or in part, please do not hesitate to contact us.

Sincerely,

Thomas E. Hill
Environmental Radiation Specialist, Sr.
Radioactive Materials
Radiological Health Section

TEH/the

January 10, 1985

Mr. Thomas E. Hill
Radiological Health Section
G.M.H.I. Room 425 South
1256 Briarcliff Rd. N.E.
Atlanta, GA 30306-2694

Dear Mr. Hill:

This letter references your letter dated December 26, 1984 concerning our application for licensing our Decatur Facility.

Specifically addressed are items 1, 2, 3, 4, 5, 6, 7, 11, 13, 14, 21, 23, 26, 29, 30, 31, 32 and 34 for which you required responses prior to amending our application to permit loading of the sources into our source racks and performing radiation surveys and dosimetry studies. Responses to the remaining 37 items will be forthcoming prior to final license issuance.

1. RSI will define the area beyond the floor to ceiling wall to be a restricted area for the purpose of this license. As such we believe that we will comply to section 20.203 (c), (6), (i), (a).

2. The electrically operated lock defined in this item will not permit operation of the RSI system since it will shut the system down every time we attempt to run product into the cell. As our discussion of this item revealed, there was an obvious misunderstanding of how our system operates. Since this lock was redundant, no action is planned.

3. Re-definition of the restricted area should satisfy this requirement in conjunction with the installation of the safety railing along the roof of the cell.

67 4. The cell monitor which is set to alarm at 100 MR/hr or less is specifically installed to warn personnel in the cell of a potential radiation problem. This monitor is wired to be activated after all four source racks have tripped their down limit switch. Therefore any subsequent attempt to raise the sources will be detected and alarm the safety system.

A continuous monitoring of the field would result in a alarm and system shutdown every time the sources are attempted to be raised. This would prevent operation of the system.

Radiation Sterilizers Incorporated, 2300 Mellon Court, Decatur, Georgia 30035/Telephone: (404)981-4077

The current design meets the regulations and is consistent with industry practice for this type of system. No change is deemed to be required.

5. The visual and audible alarms are indicators only of system operation. Failure of any of these devices will not affect system operation.

RSI personnel training requires all employees to take cognizance of all visual and audible indicators and to repair or replace them as required.

Incorporation of redundant, logical systems are not considered to be necessary and would be difficult and expensive to install. They would also create additional potential maintenance problems.

We believe that our current personnel training will assure constant working of all visual and audible indicators.

6. RSI will install an additional warning light(s) to assure that one of them will be visible from all location in the cell.

7. RSI did not install an automatic door closer on the personnel emergency door because of safety reasons. Our concern was that such a device could injure a second person from exiting by closing on him. The door is wired such that whenever it is open, it is a safety system violation and will shut the system down. We believe that the system is safer without such a device.

11. We intend to survey the total shield area per the ANSI N43:10 document. Locations and specific radiation levels exceeding 0.25 MR/hr will be documented and physically marked. The surveys can only be conducted after the amendment requested in this letter is granted.

We do not understand how radiation levels are expected to increase when additional shielding (in the form of product and carriers) is added.

13. The installation of such a stand pipe would cause severe damage to all of the electrical equipment in the sump because they could become submerged. We would propose a trap on the pool drain line whose open end terminates 18" above the gamma cell floor. Additionally a water detector will be installed in the trap to provide early warning of an overflow condition and still contain the water from discharging to the sewer prior to evaluation for contamination.

We believe this will serve the same purpose as the stand pipe.

14. This meter has been installed and helps control water conductivity below 10 microsiemens per cm.

21. a.) A video display failure has no effect on the safety system. When the screen goes blank, the operator will shut the system down and replace or repair the unit. The system is then re-started in the normal manner.

b.) All of the safety system controls are in industrial units which are designed to preclude transient problems. As an additional precaution an uninterruptable power supply conditions all line voltage.

c.) A computer malfunction will not affect the safety system. It is merely an operator interface. If it fails, the operator will shut the system down and replace or repair the unit. The system can then be started in the normal manner.

23. Program re-entry is always by disc. After a disc is read into CCU memory, a compare program verifies all data. No errors are accepted. When transfer is complete, a system test of all sensing devices verfies accuracy of the program.

26. A summary of this procedure is included.

29. A summary of this procedure is included.

30. A summary of this procedure is included.

31. The one inch stainless steel pool level control line is not susceptible to clogging from corrosion. The water is filtered and deionized. It is also located 12" below the normal pool water level. It is therefore highly unlikely that it will plug.

However, if it is assumed to happen, the level control will indicate a full pool. Normal evaporation will cause the level to slowly drop. RSI employees normally enter the cell several times a week and would notice the drop.

If they don't, the level will continue to drop until the level of water above the sources in the down position will alarm the 100 MR.hr monitor. At this time the low water level will be detected and protective action taken.

32. A summary of this procedure is included.

34. Attached are copies of the documention that will be used at the RSI Decatur facility. All training approvals will be signed off by the general manager.

Sincerely,

Al Chin
President

AC/chc

Enclosures

#15 a.) A one (1) gallon sample of pool water will be taken one (1) foot below the surface of the water.

b.) The action level that will require the collection of additional samples will be > 2.25×10^{-8} uci/cc.

c.) The minimum detectable level at Georgia Tech is ~2.25×10^{-9} uci/cc for a 2000 cc sample. The minimum detectable level at Helgeson Nuclear is 6×10^{-10} uci/cc for a 500cc sample.

d.) The turnaround time from sample collection to receiving test results for Georgia Tech would be ~1 day and ~1 week for Helgeson Nuclear.

71

#22

MANAGEMENT CONTROL OF PROGRAMMER

The programmer will be under the control of the General Manager and can be used only by him or his designee when directed by the Corporate Director of Engineering or his designee. The programmer will be used for troubleshooting problems within the irradiator.

If work is necessary on the roof of the cell it will first have to be authorized by either the production manager or general manager.

The shift supervisor and production manager are the only employees authorized to work on any equipment on the roof of the cell.

If contract employees are needed to do any work on the roof of the cell they will first have to check in with the shift supervisor or production manager who will escort them to the work area. When work is completed all contract employees will have to check out with either the shift supervisor or production manager. The shift supervisor will also verify by making all personnel have left the area.

#33 a.) When resins in RSI's deionizers need regenerating Continental Water Systems will either bring out new deionization tanks or just replace resins.

b.) RSI will dispose of any used resins after first checking to make sure they are not contaminated with radiation.

c.) Testing of the resins will either be done by Georgia Tech or some other approved radiation testing facility.

d.) Resins to be tested will be poured into a bucket, stirred and ~ 1000 gm sample taken.

e.) Sensitivity of the radioanalysis procedure at Georgia Tech will be determined during the first replacement of our deionization resins. In conversation with B. Boyd at Georgia Tech, he will need ~1000 gms of resins and will put them under a gamma analayzer and report radiation levels in uci/gm of resin.

f.) See attached letter from Continential Water Systems.

#35

As mentioned in item #26 the RSO will delegate or authorize, based on training and experience persons, the responsibility to manage and use radiation safety procedures and equipment.

The persons authorized by the RSO will be the production manager, shift supervisor and any material handler who has completed all requirements for being a shift supervisor.

75

#36

Informal surveys for radiation will be done on the following locations:

1. Water treatment area - film badge - monthly plus monitoring with radiation detector monthly.

2. Air system - checked monthly with radiation detector - only exhaust air.

3. Cell is monitored upon each cell entrance by shift supervisor.

r37

Corporate Radiation Safety Inspections will be conducted by the Corporate RSO or his designee on an unscheduled basis.

The following items will be reviewed during the inspection:

a. maintenance records
b. safety records
c. training records
d. equipment calibration records
e. any external radiation surveys since last inspection
f. general inspection of building and sterilization process
g. downtime logbook
h. cell visitor logbok
i. personnel expsure reports
j. leak test records.

Any discrepencies found during the inspection will be reviewed with the general manager and a time schedule for correction of discripenses will be set up.

The general manager will inform the Corporate RSO in writing when all discrepenses have been completed.

7

P.O. Box 908 Roswell, Georgia

January 10, 1985

TO: Luther Pratt

FROM: Bill Reynolds

RE: RSI

This memo is to inform you about the procedure for handling RSI, a new account established in December 1984.

RSI is located at 2300 Mellon Court, Decatur, Georgia 30035. We have sold exchange deionization equipment to this Company. This consists of 4 Catalog No. 2051 Deionization Tanks, 1 Catalog No. 3258 20" Filter Housing, Installation Parts and Manifold. We will NOT provide normal service for this equipment. The nature of their business is such that we do not want to intergrate the resins in those tanks back into our plant. At the time these tanks are exhausted, we will discuss their disposal of old resins and the purchase of new resins.

Please alert me when RSI calls regarding any type service.

Thank you very much.

Bill Reynolds

Bill Reynolds

BR:lkm

CC: ~~Tom Hengen, RSI~~ Tom Fisher FYI, TH
CC: Katherine McGee, CWS
CC: Stewart Ford, CWS

January 17, 1985

Mr. Thomas E. Hill
Radiological Health
878 Peachtree Street
Room 600
Atlanta, GA 30309

Dear Mr. Hill:

This letter provides additional responses to the specific items listed in your December 26, 1984 letter which were not covered in my January 10, 1985 letter. The specific items covered in my January 10, 1985 letter are so indicated.

1. Reference January 10, 1985 letter.

   Reference January 10, 1985 letter.

3. Reference January 10, 1985 letter.

4. Reference January 10, 1985 letter.

5. Reference January 10, 1985 letter.

6. Reference January 10, 1985 letter.

7. Reference January 10, 1985 letter.

8. RSI administrative procedures and personnel training instruct all RSI personnel in the purpose, use and location of the emergency cable in the cell. Because RSI considers this to be a critical device, it has installed a second redundant cable on its own initiative.

All non-RSI personnel are always accompanied by a trained RSI employee whenever they are in the cell. The RSI employee is always the last person to leave the cell. After the last non-RSI person has left the radiation cell, the trained RSI employee is required to walk completely around the cell to assure that no one is hiding or unconscious in the cell area. During this traverse of the cell, he must actuate each segment of the emergency cable which automatically assures its working status and allows the system to be subsequently armed. This requirement to actuate each segment of the emergency cable assures that the trained RSI employee has in fact traversed and inspected the cell.

A further requirement of the trained RSI employee is that he must audibly announce that the cell should be clear because the sources are about to be raised.

As an alternate action to assure that non-RSI personnel entering the cell are aware of the location and function of the emergency cable, RSI will post a notice to this effect in the area of the sliding access door which all non-RSI personnel will be asked to read prior to entering.

9. RSI has defined that the area beyond the floor to ceiling conveyor room door will be a controlled restricted area. This wall is a full physical barrier.

Additionally RSI will install protective covers on critical detection devices which might be subject to damage or disruption.

10. Administrative procedures and personnel training instruct RSI employees to verify that an unsafe radiation condition, in fact exists whenever there is a trip of the safety system. This is performed by the trained RSI employee using an operating survey meter. If an unsafe radiation situation is verified, the employee has been trained to secure all areas beyond the conveyor room, and to notify the RSO and/or the general manager. They are trained to not attempt to identify the cause and to remain on site to prevent any other entry beyond the conveyor room until the RSO and/or general manager arrives on site. This is absolutely the fastest and most reliable action that can be taken.

There may be many reasons that the safety system will trip, i.e. power failure, component failure, or accidental trip of the system. In the absence of an unsafe radiation safety situation, the trained RSI employees are fully capable of correcting the problem and re-starting the system. Unnecessary calls to the RSO are avoided.

RSI operates on a 24 hour schedule and an RSI employee will always be on site during operation to take proper corrective action. During non-operating periods, the sources are stored at the bottom of the pool and the facility and building secured. The single operating key is kept under lock.

We do not believe that a third party notification system is an improvement over the existing procedure.

11. Reference January 10, 1985 letter.

12. RSI frequently has the need to move heavy items through the maze. Permanent installation of the pressure mats would cause unnecessary damage. Our current design incorporates a rug-like covering over the eight (8) pressure mats to keep them in place. This design permits temporary removal when heavy traffic conditions occur. The trained RSI employees are responsible for the replacement of the mats prior to re-starting the system.

13. Reference January 10, 1985 letter.

14. Reference January 10, 1985 letter.

15. A summary of the pool water testing procedure is included.

16. RSI's designs are company proprietary and the result of many years of design and development effort. We estimate their value to be several million dollars if they got into the wrong hands. The designs integrate both the mechanical and safety systems, and therefore are not independent entities. Changes are continually being made to the mechanical system which do not affect the safety system. We are very concerned over allowing this information out of RSI. It also constitues a substantial potential liability to Georgia. Alternately, we will supply the state a copy of the flow or logic diagram for the safety system which will demonstrate how we meet the regulations. We will deviate from this only after prior discussion with the state.

17. The requested drawings will be provided and it is emphasized they entail a substantial liability to the state to maintain their secrecy and confidentialility. Additional information will be provided upon specific request.

18. This item is related to item 4. Since we feel that the cell monitor is proper for its application, and does meet the Federal regulations according to industry wide practice, there is no reason to move it.

19. This interlock has been installed.

20. We do not understand how this bears on radiation safety. The lights have been carefully located to provide maximum light and minimum probability of damage. It is inconceivable to envision that they can be damaged by either the conveyor system or the source handling tools.

Any light cover will reduce the amount of light emitted which would increase the probability of an accident in the cell.

Plastic or glass covers will darken and/or embrittle under the influence of radiation.

For safety reasons we prefer not to shield these light fixtures.

21. Reference January 10, 1985 letter.

22. A sumary of this procedure is included.

23. Reference January 10, 1985 letter.

24. All components used in the safety chain are designed by the manufacturers to be fail safe. The only item not meeting this criteria are the pressure mats. By their mode of operation they cannot be designed to be fail safe. RSI has accounted for this through design redundancy. Eight (8) individual 2' x 3' mats are used in a two wide four long array. At least four of these must fail before the system is potentially inoperative.

25. A summary of this procedure is attached.

26. Reference January 10, 1985 letter.

27. a.) The only possible means of failure of the source rack or modules is through corrosion. Since all components in the pool and source rack system are 300 series stainless steel, and the water is maintained at non-corrosive levels, a corrosive failure cannot be envisioned.

b.) A source rack lifting cable failure will permit the source rack to fall to a safe position at the bottom of the pool. The guide cables will aid in controlling and slowing its decent.

The sources will be removed, a new cable attached, and the rack raised for inspection and repair as required.

A single guide cable failure would not cause the rack to be misaligned since the other guide cable in conjunction with the lifting cable will maintain the rack aligned. During routine cell entries, RSI employees are trained to check the guide cables for failures and to repair or replace them as required.

Simultaneous failure of both guide cables would not prevent a serious problem since the rack will always be contained within the protective cage and guided into the water.

c.) The safety margins on the supporting track and trollies are

32. Reference January 10, 1985 letter.

33. A summary of this procedure is included.

34. Reference January 10, 1985 letter.

35. A summary of this procedure is included.

36. A summary of this procedure is included.

37. A summary of this procedure is included.

The final form of all RSI procedures will be kept on hand at the Decatur facility for review and reference as required.

I certainly hope that this review will be the last prior to the issuance of our license. Your rapid response to this letter will be greatly appreciated.

Sincerely,

Al Chin
President

AC/cc

Enclosures

Battelle
Pacific Northwest Laboratories
P.O. Box 999
Richland, Washington 99352
Telephone (509) 375-2419
Telex 15-2874

'85 JAN 28 P3:10

January 23, 1985

Mr. Jon Reuscher
Sandia National Laboratory
Division 6450
Albuquerque, NM 87185

Dear Mr. Reuscher:

EXAMINATION OF WESF CESIUM-137 CAPSULES USED IN SIDSS

We have completed an optical metallographic examination of corrosion specimens taken from the two subject capsules. Since there is interest in these data for the licensing and operation of irradiators using cesium capsules, it is appropriate to briefly describe the results pending publication of the report to be issued jointly by SNL and PNL in a few months.

e capsules (C-73 and C-74) were encapsulated at the Waste Encapsulation and Storage Facility (WESF) at Hanford in September, 1975. In July 1978, they were transferred to Albuquerque and used in the Sandia Irradiator for Dried Sewage Solids (SIDSS) from then until April 1984, when they were sent to Hanford for examination. Thus, the capsules were maintained at relatively low temperature (80 to 100°C capsules/salt interface) for 34 months and at irradiator temperature (150 to 200°C interface) for 69 months.

Upon opening of the capsules, the radioactive salt was dissolved from the capsules and four samples cut from each inner capsule wall for corrosion examination. Mechanical thickness measurements were first made on each sample prior to polishing and metallographic examination. The thicknesses measured on the sample clustered around the nominal specified thickness wall, and in every case, was well within the specified tolerance. Microscopic examination showed a maximum corrosion pitting of less than 0.001 in. on any of the samples. This corrosion is comparable to that measured from the "zero time" capsules studied by Bryan in conjunction with the 450°C tests. The "zero time" capsules were examined after filling in the normal process, but were then examined to determine the extent of corrosion which occurred. This corrosion of less than 0.001 in. was due to interaction with the molten salt initially at 700 to 730°C, and then cooling for one hour.

From these studies, we conclude that the corrosion rate is so small at the temperature experienced in SIDSS that corrosion cannot be observed even after nearly six years at temperature. This observation seems to be consistent with corrosion studies at 450°C on actual WESF capsules and at 800°C on capsules containing a simulated nonradioactive salt. Since earlier corrosion experiments on 316L stainless steel with pure cesium chloride showed very low rates emperatures as high as 600°C, we conclude that the high temperature

Battelle

corrosion (800°C and 450°C) is due to impurities rather than CsCl itself. The temperature coefficient of this reaction is apparently so large ($E^* \equiv 40$ kcal/mole) that no reaction can be observed at SIDSS capsule temperatures. These data suggest that capsule-salt interface temperatures up to 300 or 350°C should be acceptable for continuous capsule operation.

We have also evaluated the salt composition in the capsules and will be completing examination of the welds shortly. We have also discussed the results with Dan Sasmor of your staff in preparation of final reporting.

Thank you for your continuing interest in this study.

Very truly yours,

Garth L. Tingey
mics Technology and Nuclear
yproducts Section

GLT/tf
cc: J. Ayer - NRC
M. Dayani - DOE-RL
J. Jicha - DOE-HQ
W. McMullen - DOE-AL
H. Ransom - DOE-RL
D. Sasmor - SNL

JEA

FEB 1 1985

ORANDUM FOR: Donald A. Nussbaumer, Assistant Director
for State Agreements Program
Office of State Programs

M: Richard E. Cunningham, Director
Division of Fuel Cycle and Material Safety
Office of Nuclear Material Safety and Safeguards

JECT: STATUS OF WESF CAPSULES

purpose of this memorandum is to document Office of Nuclear Material
ety and Safeguards (NMSS) staff evaluation and conclusions regarding
eptability of WESF capsules for licensing as you requested in your
orandum of December 13, 1984.

er several meetings with Department of Energy (DOE) staff, the NRC
eed that a determination of the licensability of byproduct use should
w upon the evaluation of results of demonstration. Furthermore, we
fe to review license applications for demonstration projects sponsored
l These positions are documented in a letter to John J. Jicha, Jr.,
the DOE from R. E. Cunningham, dated April 3, 1984.

rge commercial irradiators, such as those used for medical product
erilization, fall into two general categories defined by design and
eration. These are (1) wet load, dry storage, dry irradiation and
) wet load, wet storage, dry irradiation. In the first case, the irradiation
carried out in air; when the irradiation duty cycle is over the source
rays are stored in air. Loading and unloading of source capsules into or
om arrays is carried out in a gamma shielded, water pool.

e acceptability of WESF capsules used in the wet load, dry storage, dry
radiation mode has been successfully demonstrated in the Sandia Irradiator
r Dried Sewage Solids (SIDSS). The SIDSS has been in operation since April
79. Our staff has visited and observed the facility. A final safety
alysis report, SAND 79-2240, that describes the SIDSS and assesses the
zards associated with its operation has been reviewed by NMSS staff.
SF capsule examination including container mechanical properties, salt
mposition, and corrosion effects have been conducted on capsules at SIDSS
art-up and after five years of operation. The capsules after five years
f operation show no effects significantly different from the start-up
apsule condition. Furthermore, it is the DOE plan to periodically examine,
or several years, capsules from the SIDSS to confirm their integrity in
hat irradiator application. Based on our observations and evaluations of
he above, we conclude that the WESF capsules are suitable for use in
acilities licensed to operate in the wet load, dry storage, dry irradiation mode.

8504240210 850408
NMSS LIC30
04-19644-01 PDR

The acceptability of WESF capsules for use in the wet load, wet storage, dry irradiation mode has not yet been demonstrated to our satisfaction. A commercial irradiator has expressed an interest in performing as a demonstration facility. DOE and NRC are in the process of defining such conditions as a capsule testing program, irradiator operating limits, and action plans preliminary to the DOE formulation of a lease agreement. We will keep you informed of significant decisions as they are reached.

Richard E. Cunningham, Director
Division of Fuel Cycle and
Material Safety
Office of Nuclear Material Safety
and Safeguards

Original Signed by
Richard E. Cunningham

Distribution: FC-167
FC Central File RECunningham
NMSS R/F RWoodruff, Region II
FCAF R/F WJAdam, Region III
VMiller JEAyer
JHickey LCRouse
BClausser FBrown
DRChapell

CAF	FCAF	FCML	FCML	FC	FC
Aye:flb	LCRouse	JHickey	VMiller	DRChapell	RECunningham
74205					

orgia Department of Human Resources
RADIOACTIVE MATERIALS LICENSE
SUPPLEMENTARY SHEET

Page 1 of 2 pages

LICENSE NUMBER GA. 868-1

AMENDMENT NO. 02

on Sterilizers, Inc.
d Hill Road, #2-190
ark, California 94025

rdance with letter dated January 17, 1985 and signed by Mr. Tom Fisher for
hin, President, Radioactive Material License GA. 868-1 is amended as follows:

Material (Element and Mass Number)	7. Chemical and/or Physical Form	8. Maximum quantity licensee may possess at any one time
lt 60	A. Sealed Sources (AECL Model C-188, Types 1, 2, 3, or 4.)	A. 500,000 curies (no single source to exceed 12,000 curies.

Use

e in RSI's Category IV Gamma Irradiator located at 2300 Mellon Court, Decatur,
a; for irradiation of single use medical devices and other items. No flammable,
ive or explosive substance are to be irradiated.

Conditions

TION 19. IS AMENDED TO READ:

Except as specifically provided otherwise by this license, the licensee shall possess
and use radioactive material described in Items 6, 7, and 8 of this license in
accordance with statements, representations, and procedures contained in:

(See Page Two)

FOR THE GEORGIA DEPARTMENT OF HUMAN RESOURCES

BY Thomas E. Fisher

uary 8, 1985

[illegible]-4

Georgia Department of Human Resources
RADIOACTIVE MATERIALS LICENSE
SUPPLEMENTARY SHEET

LICENSE NUMBER GA. 068-1

AMENDMENT NO. .02

CONDITIONS (Continued)

19. A. Application dated March 9, 1984 and signed by Allan Chin, President;

B. Letter with attachments dated August 21, 1984 and signed by Allan Chin, President;

C. Letters dated October 4, 1984 and October 31, 1984 and signed by Allan Chin, President;

D. Letters dated January 10, 1985 and January 17, 1985 and signed by Tom Fisher for Allan Chin, President.

The Georgia Department of Human Resources' Rules and Regulations for Radioactive Materials, Chapter 290-5-23 shall govern the licensee's statements in applications or letters, unless the statements are more restrictive than the regulations.

CONDITIONS 27., 28., 29., 30., and 31. ARE ADDED:

27. The following condition was described and submitted by you for approval in your original application and subsequently amended by letter dated October 31, 1984 to reflect the following:

The irradiator cell and maze shall be visually checked by the operator and controlled by any additional administrative procedures that are necessary to assure that these areas are cleared of personnel prior to each use of the source.

28. General operating procedures contained in Section 6 of the application as modified by letters dated October 31, 1984, January 11, 1985 and January 17, 1985 and Emergency Procedures contained in Section 12 of the application modified by letter dated October 31, 1984 shall be followed. A copy of these instructions shall be made available to each individual using or having responsibility for use of licensed material. Any changes in these instructions shall be submitted to Department of Human Resources, Radiological Health Section as an amendment request to Radioactive Material License GA. 068-1.

29. The following condition was described and submitted by you for approval in your letter dated January 17, 1985 to reflect the following:

The programmer shall be used only by the General Manager or his designee under the direction of the Corporate Director of Engineering or his designee for troubleshooting problems within the irradiator.

FOR THE GEORGIA DEPARTMENT OF HUMAN RESOURCES

Georgia Department of Human Resources
RADIOACTIVE MATERIALS LICENSE
SUPPLEMENTARY SHEET

LICENSE NUMBER GA 868-1

AMENDMENT NO. .02

NDITIONS (Continued)

. In accordance with the Rules and Regulations for Radioactive Material Chapter 290-5-23-.02 (12):

A. Any proposed change to the safety system software program shall be submitted to the Georgia Department of Human Resources, Radiological Health Section as an amendment request to Radioactive Materials License GA. 868-1.

B. Proposed modifications in procedures and/or the facility affecting radiation safety shall be submitted to the Department of Human Resources, Radiological Health Section as an amendment request to Radioactive Material License GA. 868-1. A written analysis may be required by the Department of Human Resources, Radiological Health Section to determine the amendment's compliance with appropriate statutes, rules and regulations.

. The following condition was described by you and submitted for approval in your original application and subsequently amended thereafter by letter dated October 31, 984 and by oral assurances.

The irradiator shall be operated only in modes where the product entrance and exit doors remain closed or are blocked by product carriers to prevent entry when the radioactive sources are not in their shielded storage position.

FOR THE GEORGIA DEPARTMENT OF HUMAN RESOURCES

February 8, 1985

BY Thomas E. Idell

84

APR 0 4 1985

FCML:JH
030-19025
(16624)

Radiation Sterilizers, Inc.
ATTN: Dr. Allen Chin, President
3000 Sand Hill Road, Building 4-245
Menlo Park, CA 94025

Dear Mr. Chin:

This refers to your letter dated April 3, 1984, requesting an amendment to License No. 04-19644-01 authorizing use of Department of Energy (DOE) WESF cesium-137 capsules in your irradiators. We have also reviewed the additional information provided in your letter dated November 8, 1984. As we have discussed on the telephone on many occasions, our primary concern in evaluating your application is making a determination that the capsules will perform satisfactorily under actual industrial "wet storage/dry use" conditions. For this purpose, DOE has agreed to continue a testing program which will include destructive examination of WESF capsules.

As you stated in your November 8 letter, you expected DOE to send us a letter discussing their lease arrangements and testing program, which would assist us in reviewing your application. We have not received any letter from DOE. However, we have discussed the matter with them and obtained some information. Our understanding of their lease and testing requirements is still under review by DOE management.

In the meantime, we are proceeding with review of your application. Please provide additional information as outlined below:

1. DOE Testing Program

   Please provide the following commitments with respect to capsule testing:

   a. RSI will not accept any capsules from DOE until a lease or other written agreement has been executed which provides for a capsule testing program.

8504240175 850408
NMSS LIC30
04-19644-01 PDR

OFFICIAL RECORD COPY

b. RSI will provide up to one capsule per year from each demonstration facility to DOE on request for destructive testing.

c. Any test results provided by DOE to RSI will be provided to NRC on request, and

d. If DOE determines that the capsules exhibit unacceptable deterioration and recalls them, RSI will return the capsules to DOE on request. (Evidence of corrosion of 25% of the thickness of the inner capsule may result in a recall).

2. Temperature monitoring

We have reviewed your submittal dated November 8, 1984, and we still believe that it is important to collect temperature data for use in evaluation of test results. Please commit to install a system for continously monitoring and recording temperature and to provide the results to DOE and NRC. The system should measure capsule temperature at the location estimated to reach maximum temperature. Describe how and where the system will be installed and operated. The best location for the temperature sensor would appear to be in a source holder as close as possible to the surface of a source capsule near the center of the source rack.

3. Illinois facility

Your application indicates that your Ohio facility will be the demonstration facility. Therefore, please confirm that you will not accept WESF capsules at your Illinois facility unless (1) DOE has agreed in writing to test capsules from that facility and you have installed a temperature monitor, OR (2) DOE has removed a capsule from the Ohio facility after one year and confirmed that the capsule has performed as expected.

4. Please clarify your exact mailing address. The building number on your most recent letter does not match our records.

5. It is our understanding that you are withdrawing your request for Neutron Products sources.

We will complete review of your application upon receipt of the above information. Please reply in duplicate and reference control No. 18624.

DISTRIBUTION
VMiller
JAyer
BCarrico
DHussbaumer
SBaggett
JGlenn, RI
JPotter, RII
BHallett, RIII
JEverett, RIV
RMontgomery, RV
NMSS r/f
FCML r/f
FC Central File

Sincerely,

Original Signed By
John W. N. Hickey

John W. N. Hickey, Section Leader
Industrial Section
Material Licensing Branch

CB▶	FCML r/f FC Central File	FCML JWNHickey/pj					
MB▶							
TB▶		04/4/85					

RADIATION
STERILIZERS
INCORPORATED

FEDERAL EXPRESS

April 4, 1985

Mr. John Hickey
U.S.N.R.C.
Willste Building
7915 Eastern Avenue
Silver Spring, MD 20910

Dear John:

As a condition of the NRC amending our license 04-19644-01 to use cesium sources, Radiation Sterilizers, Incorporated (RSI) agrees to the following:

1. RSI will not take possession of any cesium capsules until it has properly executed a lease agreement with the Department of Energy (DOE). This agreement will incorporate the testing procedures agreed upon by the NRC and DOE for evaluating the WESF capsules to be periodically removed from the designated RSI demonstration facility/facilities.

2. After NRC approval, and prior to shipment of any cesium, RSI will designate to the NRC in writing which facility or facilities will be monitored as demonstration plants. RSI will petition DOE to consider monitoring two or more of its plants as demonstration units based upon NRC's current position of requiring 12 months experience with the demonstration facility. As you know, RSI would like to load at least two facilities within a 3 - 6 month period. The outcome of these discussions will define the demonstration facility or facilities. In any event, additional use of cesium in a non-demonstration plant will not be implemented until after the first test capsule has been evaluated from the first demonstration facility, or unless approval from the NRC is obtained.

3. In any RSI demonstration plant, the temperature of the capsules will be monitored by a thermocouple attached to the protective cage around the source rack. The location, frequency of measurement, and acceptable temperature readings will be mutually agreed upon by RSI and the NRC.

8504240167 850408
NMSS LIC30
04-19644-01 PDR

Radiation Sterilizers, Inc., 3000 Sand Hill Road, Bldg. #4-245, Menlo Park, CA 94025 (415) 854-2800

Since both RSI plants in Illinois and Ohio are covered by the same NRC license, approval of the use of cesium is requested at this time for both subject to the conditions set forth in the preceding paragraphs.

I am appreciative of your cooperation and efforts to bring this project to a rapid and agreeable conclusions.

Sincerely,

Allan Chin

Allan Chin
President

C Form 374
13)

U.S. NUCLEAR REGULATORY COMMISSION

PAGE 1 OF 1 PAGES

Amendment No. 24

MATERIALS LICENSE

Pursuant to the Atomic Energy Act of 1954, as amended, the Energy Reorganization Act of 1974 (Public Law 93-438), and Title 10, Code of Federal Regulations, Chapter I, Parts 30, 31, 32, 33, 34, 35, 40 and 70, and in reliance on statements and representations heretofore made by the licensee, a license is hereby issued authorizing the licensee to receive, acquire, possess, and transfer byproduct, source, and special nuclear material designated below; to use such material for the purpose(s) and at the place(s) designated below; to deliver or transfer such material to persons authorized to receive it in accordance with the regulations of the applicable Part(s). This license shall be deemed to contain the conditions specified in Section 183 of the Atomic Energy Act of 1954, as amended, and is subject to all applicable rules, regulations and orders of the Nuclear Regulatory Commission now or hereafter in effect and to any conditions specified below.

Licensee	
Radiation Sterilizers, Inc. 3000 Sand Hill Road, 4-245 Menlo Park, California 94025	In accordance with letter dated April 3, 1984 3. License number 04-19644-01 is amended in its entirety to read as follows: 4. Expiration date June 30, 1995 5. Docket or Reference No. 030-19025

6. Byproduct, source, and/or special nuclear material	7. Chemical and/or physical form	8. Maximum amount that licensee may possess at any one time under this license
A. Cobalt 60	A. Sealed sources (NCL Model C-188)	A. 5,000,000 curies. Each source not to exceed 15,000 curies
B. Cesium 137	B. Sealed sources (DOE 'ESF)	B. 30,000,000 curies. Each source not to exceed 150,000 curies
C. Cobalt 60	C. Sealed sources (NCL Model C-188)	C. 5,000,000 curies. Each source not to exceed 15,000 curies
D. Cesium 137	D. Sealed sources (DOE 'ESF)	D. 30,000,000 curies. Each source not to exceed 150,000 curies

9. Authorized use

A. through D. Irradiation of materials, other than explosives or highly flammable products.

CONDITIONS

10. Licensed material under 6.A. and 6.C. shall only be used at 711 E. Cooper Court, Schaumburg, Illinois. Licensed material under 6.C. and 6.D. shall only be used at 305 Enterprise Drive, Westerville, Ohio.

11. The licensee shall comply with the provisions of Title 10, Chapter 1, Code of Federal Regulations, Part 19, "Notices, Instructions and Reports to Workers; Inspections" and Part 20, "Standards for Protection Against Radiation."

8504240157 850408
NMSS LIC30
04-19644-01 PDR

NLCO
Send Copy To Region

CONDITIONS

12. A. Licensed material under 6.A. and 6.B. shall be used by, or under the supervision and in the physical presence of, Allan Chin, Bruce C. Meyer, Thomas W. Barley, Thomas J. Matas or individuals trained according to application dated January 21, 1981; and letters dated April 18, 1983, and July 19, 1983 and designated by Allan Chin, Corporate Radiation Safety Officer. Licensed material shall be used in accordance with Condition 15. of this license only under the supervision and in the physical presence of, Allan Chin, Bruce C. Meyer, Thomas W. Barley or Thomas J. Matas.

B. Licensed material under 6.C. and 6.D. shall be used by, or under the supervision and in the physical presence of, Allan Chin, Bruce C. Meyer, Barry Fairand, Bob Ramsey or individuals trained according to application dated August 30, 1983; and letters dated October 28, 1983, November 9, 1983, and November 28, 1983 and designated by Allan Chin, Corporate Radiation Safety Officer. Licensed material shall be used in accordance with Condition 15. of this license only under the supervision and in the physical presence of, Allan Chin, Bruce C. Meyer, Thomas W. Barley, Bob Ramsey, or Barry Fairand.

13. A. Each sealed source containing licensed material shall be tested for leakage and/or contamination at intervals not to exceed six months. In the absence of a certificate from a transferor indicating that a test has been made within six months prior to the transfer, a sealed source received from another person shall not be put into use until tested.

B. The test shall be capable of detecting the presence of 0.05 microcurie of contamination on the test sample. The test samples shall be taken from appropriate accessible surfaces of the device in which the sealed source is permanently or semipermanently mounted or stored. Records of leak test results shall be kept in units of microcuries and maintained for inspection by the Commission.

C. If the test reveals the presence of 0.05 microcurie or more of removable contamination, the licensee shall immediately withdraw the sealed source from use and shall cause it to be decontaminated and repaired or to be disposed of in accordance with Commission regulations. A report shall be filed within 5 days of the test with U. S. Nuclear Regulatory Commission, Region III, 799 Roosevelt Road, Glen Ellyn, Illinois 60137, describing the equipment involved, the test results, and the corrective action taken.

D. The licensee is authorized to collect leak test samples in accordance with the procedures described in the licensee's application dated January 21, 1981 for analysis by Halgason Nuclear. Alternatively, leak test samples may be collected and/or analyzed by other persons specifically authorized by the Commission or an Agreement State to perform such services.

MATERIALS LICENSE
SUPPLEMENTARY SHEET

License number: 04-19644-01

Docket or Reference number: 030-19025

Amendment No. 04

CONDITIONS

14. Written instructions contained in the applications dated January 21, 1981 and August 30, 1983, and letters dated November 9, 1983 and November 8, 1984 shall be followed and a copy of these instructions shall be made available to each individual using or having responsibility for use of licensed material. Any changes in these instructions shall have the prior approval of the Material Licensing Branch, Division of Fuel Cycle and Material Safety, U. S. Nuclear Regulatory Commission, Washington, D. C. 20555.

15. This license does not authorize repairs or alterations of the irradiator or facility involving removal of shielding or access to the licensed material except as provided otherwise by specific condition of this license. Removal, replacement and disposal of sealed sources containing licensed material shall be performed only by the licensee or other persons specifically authorized by the Commission or an Agreement State to perform such services. The licensee is authorized to install the sealed sources in accordance with the procedures described in Section 8 of the licensee's application dated January 21, 1981; and letter dated November 8, 1984, with a minimum of two authorized users.

16. After installation of sealed sources and prior to initiation of the irradiation program, a radiation survey shall be conducted to determine the maximum radiation levels in each area adjoining the irradiation room. A detailed report of the results of the surveys shall be sent to the Material Licensing Branch, Division of Fuel Cycle and Material Safety, U. S. Nuclear Regulatory Commission, Washington, D. C. 20555, not later than thirty (30) days following installation of the source. A copy of such report shall also be sent to the U. S. Nuclear Regulatory Commission, Region III, 799 Roosevelt Road, Glen Ellyn, Illinois 60137.

17. Licensed material shall not be used in or on human beings or in products distributed to the public.

18. Irradiation of foods and the distribution of foods for human consumption shall be in accordance with the rules and regulations of the Food and Drug Administration, U. S. Department of Health and Human Services.

NRC Form 374A (8-82)

U.S. NUCLEAR REGULATORY COMMISSION

MATERIALS LICENSE
SUPPLEMENTARY SHEET

License number: 04-19644-01

Docket or Reference number: 030-19025

Amendment No. 04

CONDITIONS

19. The licensee shall not use any cesium-137 sources until a temperature monitoring system is installed in each facility using cesium-137. The temperature sensor shall be installed in the source racks as close as possible to the surface of the capsule estimated to reach the highest temperature.

20. Except as specifically provided otherwise by this license, the licensee shall possess and use licensed material described in Items 6, 7, and 8 of this license in accordance with statements, representations, and procedures contained in application dated January 21, 1981; letter dated June 4, 1981; letters dated February 4, 1983, April 18, 1983, May 12, 1983 and July 19, 1983; application dated August 30, 1983; and letters dated October 28, 1983, November 9, 1983, November 28, 1983, April 2, 1984, April 3, 1984, November 8, 1984, and April 4, 1985. The Nuclear Regulatory Commission's regulations shall govern the licensee's statements in applications or letters, unless the statements are more restrictive than the regulations.

FOR THE U.S. NUCLEAR REGULATORY COMMISSION:

Date APR 0 8 1985

By John W. N. Hickey

Material Licensing Branch
Division of Fuel Cycle and
Material Safety
Washington, D. C. 20555

GFS 4/5/85

MAY 15 1985

Mr. Bobby G. Rutledge, Director
Radiological Health Section
Department of Human Resources
Room 600
878 Peachtree Street
Atlanta, Georgia 30309

Dear Mr. Rutledge:

Enclosed for your information is a memorandum from the Office of State Programs concerning the licensing of WESF Cs-137 capsules in wet-storage irradiators. Please let this office know if you receive any applications for wet-storage type irradiators, especially any request for use of WESF capsules.

Sincerely,

Richard L. Woodruff
State Agreements Representative

"Enclosure as stated"

RECEIVED
MAY 16 1985
RADIOLOGICAL HEALTH UNIT

MAY 2 1985

MEMORANDUM FOR: John McGrath, Region I
Richard Woodruff, Region II
Robert Doda, Region IV
Ralph Meyer, Region IV
Jack Hornor, Region V

FROM: Donald A. Nussbaumer
Assistant Director for
State Agreements Program
Office of State Programs

SUBJECT: LICENSING OF WESF CAPSULES IN WET STORAGE-DRY IRRADIATION IRRADIATOR

NRC has licensed Radiation Sterilizers, Inc. to use WESF Cs-137 capsules in their Ohio and Illinois facilities. The uses are subject to license conditions and will also be subject to the terms of a DOE lease agreement. Copies of the NRC license amendment, supporting application and background documents are enclosed.

Because of the special conditions established over the use of the WESF capsules, you should become familiar with these documents and provide copies of pertinent materials to Agreement States in your region that have licensed or may license similar irradiators.

Donald A. Nussbaumer
Assistant Director for
State Agreements Program
Office of State Programs

Enclosure:
As stated

Official Copy

[illegible] 57 [illegible] 06 [illegible] 0 [illegible]
[illegible]

[illegible] AUTHOR AFFILIATION
[illegible] Materials Licensing Branch
[illegible] RECIPIENT AFFILIATION

SUBJECT: Amend 4 to License 08-19644-01 for Radiation Sterilizers, Inc,granting license in entirety.

DISTRIBUTION CODE: M100L COPIES RECEIVED:LTR 1 ENCL 1 SIZE: 41-79
TITLE: NMSS: Materials Licensing Package

NOTES:

	RECIPIENT ID CODE/NAME	COPIES LTTR	COPIES ENCL	RECIPIENT ID CODE/NAME	COPIES LTTR	COPIES ENCL
INTERNAL:	IE LICENSE ONLY	1	0	NMSS 396SS 01	1	1
	RGN III MTL FILE	1	1	SP LICENSE ONLY	1	0

TOTAL NUMBER OF COPIES REQUIRED: LTTR 4 ENCL 2

JUN 5 - 1985

License No. 04-19644-01

ation Sterilizers, Inc.
:: Mr. Allan Chin
President
) Sand Hill Road, 2-190
o Park, CA 94025

:lcman:

; refers to the special safety inspection conducted by Mr. J. L. Lynch and C. C. Casey of this office on May 13, 1985 of activities at 711 E. Cooper -t, Schaumburg, Illinois, authorized by NRC Byproduct Material License 04-19644-01 and to the discussion of our findings with Messrs. T. Hurley P. Robles at the conclusion of the inspection.

; inspection was initiated in response to allegations concerning radiation ety at the Schaumburg irradiator facility. The inspection included a selective nination of procedures, facility review and interviews with personnel.

specific allegations and NRC findings, which were discussed at the exit erview, are included in the attached inspection report.

ing this inspection, certain of your activities appeared to be in non-pliance with NRC requirements, as specified in the enclosed Appendix. ri n response is required.

responses directed by this letter (and the accompanying Notice) are subject to the clearance procedures of the Office of Management and get as required by the Paperwork Reduction Act of 1980, PL 96-511.

will gladly discuss any questions you have concerning this inspection.

Sincerely,

W. L. Axelson, Chief
Nuclear Materials Safety
and Safeguards Branch

:losure: Appendix,
lotice of Violation

w/enclosure:
omas Hurley, RSI
711 E. Cooper Street
Schaumburg, IL 60195
3/Document Control Desk (RIDS)

II
KC 6/12/85
sr ja
/2 5

RIII
Lynch

RIII
Wiedeman

RIII
Axelson

Appendix

NOTICE OF VIOLATION

Radiation Sterilizers, Inc. License No. 04-19544-01

As a result of the inspection conducted on May 13, 1985, and in accordance with the General Policy and Procedures for NRC Enforcement Actions, (10 CFR Part 2, Appendix C), the following violation was identified:

License Condition No. 20 requires that licensed material be possessed and used in accordance with the statements, representations, and procedures contained in certain referenced documents.

The referenced April 18, 1983 letter states that the irradiator is operated on a continuous schedule with at least two persons monitoring the process.

Contrary to the above, the irradiator was operated on March 24, 1985 with only one person in attendance.

This is a Severity Level IV violation (Supplement VI).

Pursuant to the provisions of 10 CFR 2.201, you are required to submit to this office within thirty days of the date of this Notice a written statement or explanation in reply, including for each item of noncompliance: (1) corrective action taken and the results achieved; (2) corrective action to be taken to avoid further noncompliance; and (3) the date when full compliance will be achieved. Consideration may be given to extending your response time for good cause shown.

6/6/85
Dated

W. L. Axelson, Chief
Nuclear Materials Safety
and Safeguards Branch

U.S. NUCLEAR REGULATORY COMMISSION

REGION III

Report No. 030-19025/85002(DRSS)

Docket No. 030-19025

Licensee: Radiation Sterilizers, Inc.
3000 Sand Hill Road 2-190
Menlo Park, CA 94025

Inspection At: 711 E. Cooper Court
Schaumburg, IL

Inspectors: C. C. Casey — 5/30/85 Date
C. C. Casey
Radiation Specialist

J. L. Lynch — 5/29/85 Date
J. L. Lynch
Radiation Specialist

Approved By: D. G. Wiggeman, Chief — 5/31/85 Date
Nuclear Materials Safety
Section 1

Special Inspection Summary

Inspection on May 13, 1985 (Report No. 030-19025/85002(DRSS))
Areas Inspected: This was an unannounced special safety inspection initiated by five allegations received by telephone on April 17 and 18, 1985. The inspection included a review of operating procedures, facility tour and interviews with personnel.
Results: One of the allegations was substantiated and one violation was identified.

DETAILS

1. Persons Contacted

*Thomas Hurley, General Manager
*Pete Robles, Production Manager
James Freiberg, Operator
Paul Wingfield, Operator
Jeff Babor, Operator

*Attended exit interview.

2. Purpose of Inspection

This was an unannounced special inspection for review of allegations concerning the radiation safety program at Radiation Sterilizers, Inc. (RSI). RSI utilizes approximately 1.3 million curies of cobalt-60 in a walk-in type irradiator.

3. Specific Allegations and NRC Findings

Allegation: The irradiator is not always operated with two employees in attendance as required.

Findings: License Condition No. 20 (April 18, 1983 letter) states that the irradiator is operated on a continuous schedule with at least two persons monitoring the process, one of which is a user-operator.

A review of the operation log maintained in the control room identified one instance of the irradiator being operated with less than two persons in attendance.

On March 24, 1985, the irradiator was run by an operator for a period of approximately two hours without another person in attendance. According to the operator, Jeff Babor, the other scheduled individual did not show up for work at midnight and rather than delay production, he began solo operation of the irradiator. About two hours later, Babor became ill and went home after powering the unit down. The irradiator was restarted six hours later when the next shift came on duty. No abnormal situations occurred during the single operator shift.

Babor stated that he operated the irradiator alone because he was concerned that if production ceased, RSI management would blame him for the down time. Interviews with other employees did not show similar concerns. This issue was discussed with RSI management at the conclusion of the inspection. The inspectors were told that RSI policy states that two individuals are to be present during irradiator operation and that employees would not be punished for following policy. This point will be affirmed during future employee safety meetings and incorporated into written procedures.

This appears to be an isolated incident of a failure to follow license requirements. This constitutes noncompliance with License Condition No. 20.

The allegation was substantiated, one violation was identified.

Allegation: The ventilation exhaust fan in the irradiator cell is not working, thus allowing ozone levels to attain high levels.

Findings: The exhaust fan was functioning during the inspection (as it was during the March 1985 inspection). No evidence of high ozone concentrations was apparent. The facility is equipped with two 4,000 cfm fans, one in a backup capacity. The General Manager indicated that a fan has stopped working in the past but when noticed (smell and eye discomfort from increased ozone concentration), the backup fan was initiated. RSI was cited during the March inspection for failure to check the air system for proper operation on a monthly basis. This check was performed as required since the inspection. The licensee management plans to purchase an instrument to measure ozone concentrations in air to address employee concerns in the future.

The allegation was not substantiated, no violations were identified.

Allegation: RSI compromises system safety when they place products close to the source racks.

Findings: In order to deliver high doses to products in a relatively short period of time, they are placed in positions around the source cage. None of these set positions are inside the source cage plane or present an increased possibility of collision with the source racks.

The allegation was not substantiated, no violations were identified.

Allegation: The flashing warning beacon located at the maze entrance is not functional. Other warning lights are also inoperational.

Findings: The nonfunctional warning beacon was cited as a violation during the March 14, 1985 inspection. It was repaired the next day according to licensee records. The beacon was operating normally during this inspection. All other warning lights were functioning properly during both inspections. The employees that were interviewed verified that repair records were accurate.

The allegation was not substantiated, no violations were identified.

Allegation: Warning horn indicating source raising does not work at all times.

Findings: The warning horn functioned properly through repeated testing during both inspections. Although some tone distortion was noted at times, the horn was definitely adequate to warn people of the source raising. Interviews with employees indicated that the horn has been functional as required.

RADIATION STERILIZERS INCORPORATED

July 22, 1985

FEDERAL EXPRESS

Mr. John Mickey
U.S. N.R.C.
Willste Building
7915 Eastern Avenue
Silver Springs, MD 20910

Dear John:

We have finally progressed to the point where the cesium shipments can commence. The following tasks have been completed by RSI:

1. Executed leases with DOE for a total of 21 MCi cesium.

2. Completed fabrication and registration of nine (9) Model 1500 series shipping containers. These casks are in Hanford awaiting loading and shipping.

3. Final approval obtained from Rockwell on RSI five (5) capsule shipping holder, based upon results of thermal tests.

4. Trucking contracts signed with A.J. Metler to transport capsules.

5. Both Westerville, OH and Decatur, GA plants have been modified to accept cesium capsules.

The Westerville facility, which is the designated wet storage demonstration facility, will be loaded with approximately 9 MCi of cesium commencing on or about August 1, 1985.

The temperature of the capsules will be monitored with thermo couples on the source cage (stationary) and on a dummy source loaded into the source rack sandwiched between live sources. After enough data has been obtained to establish a control reference temperature at the cage thermo-couple the source thermo couple will be removed.

A second temperature monitoring plan will also be evaluated for potential long term measurement. This system will use Kermet Markal MM Series temperature indicator labels, which will cover the temperature range of concern. These sensors will be enclosed within a water tight dummy capsule which will be loaded into the source rack with the WESF capsules.

As we discussed earlier, both RSI and DOE desire to move the 21 MCi of cesium in a single continuous program. RSI would prefer to split this amount between two of its facilities for maximum utilization of the isotope.

In order to accomplish this, I am requesting that condition 3 of your April 4, 1985 letter be modified to permit the use of cesium in a second facility immediately after the Westerville facility is loaded. The conditions of use in the second facility will still be governed by the results of testing of capsules at the designated demonstration plant in Westerville. It is anticipated that the shipment of the 9 MCi into Westerville will take 2-3 months to accomplish. <u>We will agree to remove the cesium from all of our plants based upon any adverse result from the Westerville capsule.</u>

Any interruption in the shipping schedule, will result in considerable pertubations in the DOE Hanford operations and potentially large additional financial costs to RSI.

Our optimal choice is to load 12 MCi into the Decatur facility after Westerville, and we would like to have a favorable response to our request before we submit an amendment to the state of Georgia. Your rapid response to this request is urgently sought in order to provide the state of Georgia with adequate time to respond. I am sure that they will contact your

office for confirmation.

I will call you next Monday to discuss this matter with you.

Thank you for your cooperation.

Sincerley,

Allan Chin

Allan Chin
President

AC/tk
Enclosure

Al— A set of these will do the trick

Barry

Z050-C10 series

Hermet Markal HM Series Temperature Indicator Labels

If Sal can make or use an aluminum capsule with a screw top & "O" ring seal, we could tape the indicators to the inside wall & drop the capsule into the barrel back adjacent to the vacuum capsule.

Z050-C10 through Z050-C28 **TEMPERATURE INDICATOR LABELS, Hermet®, Markal HM series**

For measuring, monitoring and documenting temperatures in Fahrenheit or Celsius degrees. Accuracy ±1%. Of plastic-coated paper, approximately 16 x 48 mm, with self-adhesive backing. Each label has five temperature-indicating panels marked in °F and °C. Panel color changes irreversibly from white to black when marked temperature is reached. Resists solvents, grease, oil, steam and water. Color will not change through aging.

Product No.	Temperature panels				
Z050-C10	105 40	110 43	115 46	120 49	130°F 54°C
Z050-C12	120 40	140 60	150 65	160 71	180°F 82°C
Z050-C14	105 40	130 54	150 65	170 77	200°F 93°C
Z050-C16	140 60	150 65	160 71	170 77	180°F 82°C
Z050-C18	180 82	200 93	210 99	220 101	240°F 116°C
Z050-C20	200 93	230 110	250 121	270 132	300°F 149°C
Z050-C22	270 132	280 143	300 149	310 154	330°F 166°C
Z050-C24	290 143	300 149	310 154	320 160	330°F 166°C
Z050-C26	300 149	330 166	350 177	370 188	400°F 204°C
Z050-C28	400 204	425 216	450 232	480 249	500°F 260°C

Also available with single temperature panel marked in °F and °C, on special order. Information furnished on request.

Z050-C10	LABEL, 130°F/54°C. Pkg of 12	19.20
Z050-C12	LABEL, 180°F/82°C. Pkg of 12	19.20
Z050-C14	LABEL, 200°F/93°C. Pkg of 12	19.20
Z050-C16	LABEL, 180°F/82°C. Pkg of 12	19.20
Z050-C18	LABEL, 240°F/116°C. Pkg of 12	19.20
Z050-C20	LABEL, 300°F/149°C. Pkg of 12	19.20
Z050-C22	LABEL, 330°F/166°C. Pkg of 12	19.20
Z050-C24	LABEL, 330°F/166°C. Pkg of 12	19.20
Z050-C26	LABEL, 400°F/204°C. Pkg of 12	19.20
Z050-C28	LABEL, 500°F/260°C. Pkg of 12	19.20

Z050-C36 TEMPERATURE INDICATOR LABEL ASSORTMENT, Hermet®, Markal HM-LO

Consists of three each Z050-C10 and C16 Labels, three labels having temperature panels 190, 200, 210, 220, 230°F and 88, 93, 99, 104, 110°C and three having temperature panels 240, 250, 260, 270, 280°F and 116, 121, 127, 132, 138°C.

Z050-C36 LABELS, HM-LO. Set of 12 ..... 19.20

Z050-C37 TEMPERATURE INDICATOR LABEL ASSORTMENT, Hermet®, Markal HM-HI

Consists of three Z050-C24 Labels, three labels having temperature panels 340, 350, 360, 370, 380°F and 171, 177, 182, 188, 193°C; three with temperature panels 390, 400, 410, 420, 435°F and 199, 204, 210, 216, 224°C; and three having panels 450, 465, 480, 490, 500°F and 232, 241, 249, 254, 260°C.

Z050-C37 LABELS, HM-HI. Set of 12 ..... 19.20

Barry — get one of these two sets

UNITED STATES
NUCLEAR REGULATORY COMMISSION
WASHINGTON, D. C. 20555

Sreniawski

JUL 25 1985

FCML:JH
030-19025

Radiation Sterilizers, Inc.
ATTN: Dr. Allan Chin, President
3000 Sand Hill Road, Bldg. 4-245
Menlo Park, California 94025

Dear Dr. Chin:

This is a reply to your letter dated July 22, 1985, regarding use of cesium-137 WESF capsules in your irradiators under License No. 04-19644-01.

Please be advised that you are required to adhere to all commitments, statements, and representations in your license applications and associated correspondence, unless we specify otherwise through a license amendment. If you request a license amendment, it should submitted with the proper fee to our Region III Office. They will coordinate with other NRC offices as appropriate.

We have the following specific comments regarding your letter dated July 22, 1985:

1. As we requested in our letter dated April 4, 1985, you still need to submit a detailed description of your continuous temperature monitoring system, including sketches. We believe that is important to obtain continuous temperature data on the capsules. Please note that the thermocouple system cannot be removed unless this is authorized by a license amendment.

2. As you stated in your letter dated April 4, 1985, you will not use cesium in a "non-demonstration plant" until after the first test capsule from your Ohio facility is evaluated by the Department of Energy (DOE) (after one year), unless the Nuclear Regulatory Commission approves. As we explained in our letter dated April 4, 1985 and in telephone conversations, test data should be obtained on the performance of the WESF capsule in production irradiators before we authorize routine use. We do not believe that it is appropriate to authorize use of the WESF capsules in your Illinois facility prior to obtaining satisfactory DOE test results from the Ohio facility.

If you have additional questions regarding this matter, feel free to call me directly at (301) 427-4238.

Sincerely,

John W. N. Hickey

John W. N. Hickey, Section Leader
Industrial, Medical, and Academic
Sections
Material Licensing Branch
Division of Fuel Cycle and
Material Safety

August 16, 1985

Mr. Thomas E. Hill, Chief
Radioactive Materials Unit
Radiologic Health Section
Georgia Department of Human Resources
878 Peachtree Street N.E.
Atlanta, GA 30309

Dear Mr. Hill:

Please amend our license No. GA868-1 to add the nuclide cesium 137 to the list of licensed radioactive materials.

Nuclide: Cesium 137

Physical Form: Waste Encapsulation Storage Facility (WESF) Capsules. Double encapsulated in stainless steel.

Possession Limit: 21 MCi

RSI has been negotiating with the DOE and NRC for the past two years to approve the use of WESF capsules in wet storage category IV panoramic irradiators. We have been successful in our efforts and the NRC has licensed out Westerville, OH facility to use cesium capsules. The Westerville facility has been designated as the demonstration facility for this type of application, and as such will be monitored by the DOE to assure that no unforeseen problems may arise during the use of the WESF capsules. A capsule will be periodically removed from the Westerville plant and destructively analyzed.

Approximately seven (7) cesium 137 curies are equivalent to one (1) cobalt 60 curie using these sources because of the lower photon energy and self absorption of the WESF capsules.

The current shortage of cobalt 60 has had severe economic impact on RSI, and the use of this alternate gamma source will greatly alleviate this problem. The DOE is also encouraging industry to utilize this material for beneficial uses.

UNITED STATES
NUCLEAR REGULATORY COMMISSION
WASHINGTON, D.C. 20555

OCT 21 1985

MEMORANDUM FOR: Donald A. Nussbaumer, Assistant Director
for State Agreements Program, SP

FROM: Vandy L. Miller, Chief
Material Licensing Branch, FC

SUBJECT: USE OF WESF CAPSULES

As discussed in Mr. Cunningham's memorandum to you dated September 16, 1985, we have reviewed our position on WESF capsules. We have decided to consider applications for use of WESF capsules in additional wet storage irradiator facilities. Our position is more fully explained in the enclosed letter to the Department of the Energy. We will keep you informed of any additional developments involving WESF capsules.

Vandy L. Miller, Chief
Material Licensng Branch
Division of Fuel Cycle and
Material Safety

Enclosure: As stated

UNITED STATES
NUCLEAR REGULATORY COMMISSION
WASHINGTON, D.C. 20555

OCT 21 1985

Mr. John J. Jicha, Jr., Director
R & D and Byproducts Division
Office of Defense Waste
and Byproducts Management
Department of Energy
Washington, DC 20545

Dear Mr. Jicha:

This is a reply to your letter dated September 6, 1985, asking the Nuclear Regulatory Commission (NRC) staff to review its position on use of cesium-137 Waste Encapsulation Storage Facility (WESF) capsules in wet storage irradiators. As you know, we have licensed Radiation Sterilizers, Inc. to use WESF capsules in their Ohio facility, and they have agreed that their other facilities will not use WESF capsules until a capsule is removed and destructively tested after one year.

We have evaluated the technical studies discussed in your letter. The data indicate that the WESF capsules performed well in a demonstration dry storage irradiator and in "wet/dry thermal cycle" tests. We agree that it is unlikely that short-term leakage problems will develop with the WESF capsules. Therefore, we will consider license applications for use of WESF capsules in additional wet storage irradiators.

Our licensing actions involving WESF capsules will be based on the following understandings discussed in my previous letter to you dated April 5, 1985:

1. Capsules will be periodically removed from the Radiation Sterilizers Ohio facility and destructively tested by a Department of Energy (DOE) contractor.

2. Capsule temperatures will be monitored and recorded by Radiation Sterilizers at the Ohio facility.

3. DOE lease agreements will require return of the capsules to DOE if destructive tests indicate a significant problem.

With respect to Item No. 2, we are still evaluating the suitability of the temperature monitoring system installed by Radiation Sterilizers. Mr. William Remini of your staff has agreed to provide comments as to whether the system will provide data suitable for evaluation in conjunction with your destructive tests, and as to how long temperature data needs to be collected. It is our understanding that Dr. Garth Tingey of Pacific Northwest Laboratories, who visited the Ohio site on October 4, 1985, will assist in the evaluation.

We will inform our Agreement States that NRC will now consider license applications for use of WESF capsules in wet storage irradiators. You may wish also to inform your potential customers of our position. Thank you for your cooperation, and we look foward to receiving your comments on the Radiation Sterilizers temperature monitoring system.

Sincerely,

Richard E. Cunningham, Director
Division of Fuel Cycle and
Material Safety

UNITED STATES
NUCLEAR REGULATORY COMMISSION
WASHINGTON, D.C. 20555

Ref: SA/LAB

OCT 23 1985

ALL AGREEMENT STATES

WESF IRRADIATOR SOURCES

Enclosed for your information is a letter to DOE revising the NRC's position on the use of the Waste Encapsulation Storage Facility (WESF) capsule in wet storage irradiators.

The NRC will now consider license applications for use of WESF capsules in additional wet storage irradiators. This change in our policy is connected to conditions detailed in the enclosed letter.

Kathleen N. Schneider for
Donald A. Nussbaumer
Assistant Director for
State Agreements Program
Office of State Programs

Enclosure:
As stated

120

HILL	MORRIS
GOULD	SANDERS
MOTT	PAGEL
LINCOLN	DOBBY

OCT 21 1985

Mr. John J. Jicha, Jr., Director
R & D and Byproducts Division
Office of Defense Waste
and Byproducts Management
Department of Energy
Washington, DC 20545

Dear Mr. Jicha:

This is a reply to your letter dated September 6, 1985, asking the Nuclear Regulatory Commission (NRC) staff to review its position on use of cesium-137 Waste Encapsulation Storage Facility (WESF) capsules in wet storage irradiators. As you know, we have licensed Radiation Sterilizers, Inc. to use WESF capsules in their Ohio facility, and they have agreed that their other facilities will not use WESF capsules until a capsule is removed and destructively tested after one year.

We have evaluated the technical studies discussed in your letter. The data indicate that the WESF capsules performed well in a demonstration dry storage irradiator and in "wet/dry thermal cycle" tests. We agree that it is unlikely that short-term leakage problems will develop with the WESF capsules. Therefore, we will consider license applications for use of WESF capsules in additional wet storage irradiators.

Our licensing actions involving WESF capsules will be based on the following understandings discussed in my previous letter to you dated April 5, 1985:

1. Capsules will be periodically removed from the Radiation Sterilizers Ohio facility and destructively tested by a Department of Energy (DOE) contractor.

2. Capsule temperatures will be monitored and recorded by Radiation Sterilizers at the Ohio facility.

3. DOE lease agreements will require return of the capsules to DOE if destructive tests indicate a significant problem.

321

With respect to Item No. 2, we are still evaluating the suitability of the temperature monitoring system installed by Radiation Sterilizers. Mr. William Remini of your staff has agreed to provide comments as to whether the system will provide data suitable for evaluation in conjunction with your destructive tests, and as to how long temperature data needs to be collected. It is our understanding that Dr. Garth Tingey of Pacific Northwest Laboratories, who visited the Ohio site on October 4, 1985, will assist in the evaluation.

We will inform our Agreement States that NRC will now consider license applications for use of WESF capsules in wet storage irradiators. You may wish also to inform your potential customers of our position. Thank you for your cooperation, and we look foward to receiving your comments on the Radiation Sterilizers temperature monitoring system.

Sincerely,

Original Signed by
Richard E. Cunningham

Richard E. Cunningham, Director
Division of Fuel Cycle and
Material Safety

DISTRIBUTION
All 5 Regions
DNussbaumer
NBassin
SBaggett
JBCarrico
PVacca
VLMiller
FC Central File NMSS r/f FCML r/f

FCML	FCML	FC	FC
JHickey/sc	VLMiller	DRChapell	RECunningham
10/ /85	10/ /85	10/ /85	10/ /85

UNITED STATES
NUCLEAR REGULATORY COMMISSION
WASHINGTON, D.C. 20555

Ref: SA/JOL

NOV 7 1985

ALL AGREEMENT STATES

USE OF WESF CAPSULES IN WET STORAGE IRRADIATORS

NMSS, at the request of DOE, has reviewed its position on the use of cesium-137 Waste Encapsulation Storage Facility (WESF) capsules in wet storage irradiators. Up to now, NRC had approved the use of these capsules at only one wet storage irradiator.

NRC staff, following review of technical data, will now consider license applications for using WESF capsules in additional wet storage irradiators. This is more fully explained in the enclosed letter to DOE.

We continue to ask that applications for new wet storage irradiators received by your State be coordinated with NRC through your Regional State Agreements Officer. We also ask that applications to use WESF capsules also be coordinated with us. In such cases, we will be pleased to offer technical assistance.

We will keep you informed of any additional developments involving WESF capsules.

Donald A. Nussbaumer
Assistant Director for
State Agreements Program
Office of State Programs

Enclosure:
As stated

cc: w/encl.
NRC Irradiator Radiation
Safety Workshop Participants

RECEIVED
NOV 22 1985
RADIOLOGICAL
HEALTH UNIT

Radiological Health Section, Suite 210

December 2, 1985

Mr. Allan Chin, President
Radiation Sterilizers, Inc.
300 Sand Hill Road, Building 4-245
Menlo Park, California 94025

Dear Mr. Chin:

This replies to your letters of October 30, 1985 and August 16, 1985 regarding the use of Cesium 137 WESF Capsules under license No. GA. 868-1.

Upon receipt of the information indicated below we are prepared to resume processing of your license amendment.

Please provide your emergency procedures and systems for the following:

1. A continuous monitoring and alarm system for gamma radiation emanating from the resin tanks. Under normal operating conditions, such a system should alert the control room operator who in turn would shut off the recirculating system and initiate emergency actions.

2. A storage pool cleanup system with provisions for shielding.

3. A plan for disposal of contaminated resins.

4. Procedures for operation of cleanup systems under contaminated conditions.

We will also need a copy of your lease agreement with D.O.E. Do not hesitate to contact us should you have any questions.

Sincerely,

Thomas E. Hill

Thomas E. Hill, Chief
Radioactive Materials Unit
Radiological Health Section

TEH/WDI:dg

cc: Tom Fisher, General Manager

RADIATION STERILIZERS INCORPORATED

December 10, 1985

Mr. Thomas E. Hill, Chief
Radioactive Materials Unit
Radiological Health Section, Suite 600
Georgia Department of Human Resources
878 Peachtree Street, NE
Atlanta, GA 30309

Reference: License Number GA.868-1

Dear Mr. Hill:

The following information is provided in response to the requests outlined in your December 2, 1985 letter.

1. A model 501A Digital Area Monitor (or equivalent meter) will be installed adjacent to the resin tanks for continuous monitoring. The monitor will be set to provide an audible alarm between 0.1 and 0.2mr/hr. This alarm will alert the operator to shut off the recirculating system and to initiate emergency actions.

2. Two types of capsule failure are possible. The first is a small leak due to a weld failure or pin hole. In this situation leakage rates will be very low and personnel would have access to the cell for limited periods of time where the radiation levels are 0.1 to 0.2 mr/hr.

Ion exchange columns encased in concrete will be used to continuously remove the activity from the circulated pool water. Concurrently the leaky source will be located using the equipment developed by the DOE at Hanford, or similar. This equipment consists of a closed loop system which includes a container into which a cesium capsule may be loaded. The activity of the water in the closed loop is monitored. The leaky source will be indicated by an increase in activity with time.

The leaky source will be sealed into a container, which in turn will be loaded into a shipping cask for return to Hanford for inspection and/or disposition.

Radiation Sterilizers, Inc., 3000 Sand Hill Road, Bldg. #4-245, Menlo Park, CA 94025 (415) 854-2800

The concrete shielded resin columns will be used for final removal of the residual cesium from the pool water.

The second type of capsule failure would be termed catastrophic and result in radiation levels above the storage pool which would prevent personal access. This type of failure is highly unlikely.

In this event, concrete shielded resin columns would be used to lower the pool activity to levels where personnel access to the pool is permitted. Once this level is reached, the clean up procedure would be as described above.

3. The contaminated concrete shielded resin columns will be disposed of via shipment or burial to a commercial waste disposal site.

4. Any alarm of the radiation monitor located adjacent to resin columns will be treated as a suspected radiation incident. The operator will confirm the radiation levels with at least two (2) operating survey meters after shutting off the recirculating pump.

If the levels are not confirmed, the incident will be treated as false alarm, and operations resumed after resetting the radiation monitor.

If the levels are confirmed, the operator will shut down the system, evacuate all personnel from the plant, and notify the RSO. The RSO will be responsible for any and all subsequent emergency responses based upon the specific conditions existing.

The basic clean up procedures outlined above in item 2 will be followed under the RSO's direct supervision. The assistance of your office and DOE experts will be solicited throughout this operation.

5. A copy of the DOE lease agreement is included. This lease covers the first 12MCi increment of RSI's allotment. We have taken delivery of 9MCi of this amount, which has been installed in our Westerville plant.

The DOE's revised allocation quantities were scheduled for announcement on December 6, 1985. We have as yet not been notified of our new allocation. As a minimum, we expect to be allocated an additional 9MCi. We would like to install these 9MCi plus 3MCi remaining on our current lease into the Decatur facility.

This lease is representative of the future DOE leases.

These monitoring and cleanup procedures have been accepted by the NRC prior to granting us license to load and use cesium in Westerville.

As soon as our allocation is made known to us, I will call you to inform you. I trust this information will permit you to approve our request to load and use the WESF capsules in our Decatur facility. We would like to initiate action to do this as soon as our allocation is made known to us.

Sincerely,

Allan Chin

Allan Chin
President

AC/tk

Enclosure

cc: Mr. Tom Fisher

December 17, 1985

In reply refer to: General

Mr. Allan Chin, President
Radiation Sterilizers, Inc.
3000 Sand Hill Road
Building 4-245
Menlo Park, California 94025

Dear Mr. Chin:

Request for Allocation of Cesium-137

Your allocation of Cesium-137 under the DOE's recently instituted leasing program has been established at approximately 21 megacuries total. Please notify us, in writing by December 27, 1985, of your acceptance or rejection of this allocation. Since your current lease agreement is for a nominal 12 megacurie allotment, we will use the second lease documents prepared earlier for an additional allotment of approximately 9 megacuries. As you know, we possess three originals bearing your signature, but we would ask that you accept an amendment to Paragraph B.10 on indemnification which we have discussed with you previously.

If you accept, we will also need additional information from you by December 27, 1985, or as soon as possible, to allow us to determine the shipping schedule at Richland, Washington, for all remaining shipments, and to provide you a cost estimate of your charges. Accuracy and completeness are essential to a timely handling of your submission.

Please provide detailed information on the following topics:

1. Identity of your shipping casks.

2. Copy of Cask Certificate of Compliance (if other than GE-1500 or GE-700 casks or your certified casks used previously).

3. Specifications (capacity, dimensions, etc.) including drawings of cask (if other than GE-1500 and/or GE-700 or your certified casks used previously).

4. Number of canisters (or curies) per shipping cask.

5. Number of shipping casks allowed per truck.

6. Number of trucks preferred per week.

7. Preferred shipping schedule by week, including earliest possible starting date of your second allotment, between February 3, and August 1, 1986, and any logistical constraints.

8. Number of trucks at Richland simultaneously.

9. Truck tie-down specifications.

10. Cask Safety Analysis Report for Packaging.

11. NRC or state license number if different from that on your first lease.

As a reminder to you, we suggest you make certain the carrier you choose meets DOT requirements, such as trained and licensed drivers, approved trailers, etc. Note that many states are now looking very closely at these shipments with frequent inspections. Mr. C. R. DeLannoy, telephone (509) 376-2247, at DOE-Richland Operations Office will answer any technical questions relative to shipping limitations or requirements.

As a matter of practicality and in accordance with your indicated preference, we hope to resume shipments on your first lease and continue into shipments of your second allotment without interruption. Once a final delivery schedule has been established for your remaining shipments, you must meet that schedule and provide the resource equipment described in your submission to avoid invalidation of your cost estimate for shipping. In such an event, you would be billed actual charges and your schedule would be slipped to a time convenient to the commitments at Richland. We reserve the right to alter the schedule if required by operational limitations at Richland. However, all reasonable efforts will be made to meet delivery commitments.

Please submit the information requested above at the earliest possible date, but certainly in time for its receipt at ORNL (address below) by December 27, 1985. We will then send you the three lease forms (for your signed acceptance of the amendment), a cost estimate, and shipping schedule by January 17, 1986. We would like you to return the lease forms as soon as possible before January 24, 1986. If all prerequisittes have been met, we will send you a DOE executed original lease form by February 7, 1986.

Please send your reply and other business correspondence to:

Oak Ridge National Laboratory
Isotope Distribution Office
P.O. Box X
Oak Ridge, TN 37831

December 17, 1985

In reply refer to: General

Mr. Allan Chin, President
Radiation Sterilizers, Inc.
3000 Sand Hill Road
Building 4-245
Menlo Park, California 94025

Dear Mr. Chin:

Request for Allocation of Cesium-137

Your allocation of Cesium-137 under the DOE's recently instituted leasing program has been established at approximately 21 megacuries total. Please notify us, in writing by December 27, 1985, of your acceptance or rejection of this allocation. Since your current lease agreement is for a nominal 12 megacurie allotment, we will use the second lease documents prepared earlier for an additional allotment of approximately 9 megacuries. As you know, we possess three originals bearing your signature, but we would ask that you accept an amendment to Paragraph B.10 on indemnification which we have discussed with you previously.

If you accept, we will also need additional information from you by December 27, 1985, or as soon as possible, to allow us to determine the shipping schedule at Richland, Washington, for all remaining shipments, and to provide you a cost estimate of your charges. Accuracy and completeness are essential to a timely handling of your submission.

Please provide detailed information on the following topics:

1. Identity of your shipping casks.

2. Copy of Cask Certificate of Compliance (if other than GE-1500 or GE-700 casks or your certified casks used previously).

3. Specifications (capacity, dimensions, etc.) including drawings of cask (if other than GE-1500 and/or GE-700 or your certified casks used previously).

4. Number of canisters (or curies) per shipping cask.

5. Number of shipping casks allowed per truck.

6. Number of trucks preferred per week.

7. Preferred shipping schedule by week, including earliest possible starting date of your second allotment, between February 3, and August 1, 1986, and any logistical constraints.

8. Number of trucks at Richland simultaneously.

9. Truck tie-down specifications.

10. Cask Safety Analysis Report for Packaging.

11. NRC or state license number if different from that on your first lease.

As a reminder to you, we suggest you make certain the carrier you choose meets DOT requirements, such as trained and licensed drivers, approved trailers, etc. Note that many states are now looking very closely at these shipments with frequent inspections. Mr. C. R. DeLannoy, telephone (509) 376-2247, at DOE-Richland Operations Office will answer any technical questions relative to shipping limitations or requirements.

As a matter of practicality and in accordance with your indicated preference, we hope to resume shipments on your first lease and continue into shipments of your second allotment without interruption. Once a final delivery schedule has been established for your remaining shipments, you must meet that schedule and provide the resource equipment described in your submission to avoid invalidation of your cost estimate for shipping. In such an event, you would be billed actual charges and your schedule would be slipped to a time convenient to the commitments at Richland. We reserve the right to alter the schedule if required by operational limitations at Richland. However, all reasonable efforts will be made to meet delivery commitments.

Please submit the information requested above at the earliest possible date, but certainly in time for its receipt at ORNL (address below) by December 27, 1985. We will then send you the three lease forms (for your signed acceptance of the amendment), a cost estimate, and shipping schedule by January 17, 1986. We would like you to return the lease forms as soon as possible before January 24, 1986. If all prerequisittes have been met, we will send you a DOE executed original lease form by February 7, 1986.

Please send your reply and other business correspondence to:

Oak Ridge National Laboratory
Isotope Distribution Office
P.O. Box X
Oak Ridge, TN 37831

10, Please feel free to direct questions on business matters to G. M. Carpenter or Mr. T. L. Dahl at (615) 574-6984.

Very truly yours,

T. L. Dahl

T. L. Dahl
Head
Isotope Distribution Office

D:rrl

RADIOACTIVE MATERIALS LICENSE
SUPPLEMENTARY SHEET

LICENSE NUMBER GA. 8

AMENDMENT NO. .07

Ration Sterilizers, Incorporated
E \ Hill Road, #2-190
Ni ark, California 94025

accordance with letter dated August 16, 1985 and signed by Allan Chin,
sident, Radioactive Material License GA. 868-1 is amended as follows:

add:

ive Material (Element and Mass Number)	7. Chemical and/or Physical Form	8. Maximum quantity licensee may possess at any one time
Cesium 137	B. Sealed Sources (DOE WESF)	B. 12,300,000 curies Each source not to exceed 150,000 curies

For use in RSI's Category IV Gamma Irradiator located at 2300 Mellon Court, Decatur, Georgia; for irradiation of single use medical devices and other items. No flammable, corrosive or explosive substance are to be irradiated.

Conditions

dition 19. (See Page 2)

January 6, 1986

FOR THE GEORGIA DEPARTMENT OF HUMAN RESOURCES

BY Thomas E. Hill

Georgia Department of Human Resources
RADIOACTIVE MATERIALS LICENSE
SUPPLEMENTARY SHEET

LICENSE NUMBER GA. 8

AMENDMENT NO. 07

Condition 19. is amended to read:

19. Except as specifically provided otherwise by this license, the licensee shall possess and use radioactive material described in Items 6, 7, and 8 of this license in accordance with statements, representations, and procedures contain in:

A. Application dated March 9, 1984 and signed by Allan Chin, President;

B. Letter with attachments dated August 21, 1984 and signed by Allan Chin, President;

C. Letters dated October 4, 1984 and October 31, 1984 and signed by Allan Chin President;

D. Letters dated January 10, 1985 and January 17, 1985 and signed by Tom Fishe for Allan Chin, President;

E. Letter dated August 16, 1985 and signed by Allan Chin, President; and

F. Letter with attachment dated December 10, 1985 and signed by Allan Chin, President.

The Georgia Department of Human Resources' Rules and Regulations for Radioacti Materials, Chapter 290-5-23 shall govern the licensee's statements in applications or letters, unless the statements are more restrictive than the regulati

Condition 32. is added:

32. The licensee shall not use any cesium-137 sources until a temperature monitori system is installed. The temperature sensor shall be installed in the source racks as close as possible to the surface of the capsule estimated to reach tl highest temperature.

FOR THE GEORGIA DEPARTMENT OF HUMAN RESOURC

BY Thomas E. Hill

DATE January 6, 1986

'eorgia Department of Human Resource
RADIOACTIVE MA;ERIALS LICENSE
SUPPLEMENTARY SHEET

LICENSE NUMBER GA. 8

AMENDMENT NO. .07

CORRECTED COPY

Radiation Sterilizers, Inc.
300 Sand Hill Road, #2-190
Menlo Park, California 94025

In accordance with letter dated August 16, 1985 and signed by Allan Chin, President, Radioactive Material License No. GA. 868-1 is amended as follows:

To Add:

Radioactive Material (Element and Mass Number)	7. Chemical and/or Physical Form	8. Maximum quantity licensee may possess at any one time
B. Cesium 137	B. Sealed Source (DOE WESF)	B. 12,300,000 curies Each source not to exceed 150,000 curies

Authorized Use

B. For use in RSI's Category IV Gamma Irradiator located at 2300 Mellon Court, Decatur, Georgia, for irradiation of single use medical devices and other items. No flammable, corrosive or explosive substance are to be irradiated.

Conditions

Condition 19. (See Page 2)

FOR THE GEORGIA DEPARTMENT OF HUMAN RESOURCES

BY Thomas S. Hill

DATE March 12, 1986

DPH/EHS(0)-4

Georgia Department of Human Resources
RADIOACTIVE MATERIALS LICENSE
SUPPLEMENTARY SHEET

LICENSE NUMBER Ga 868-1

AMENDMENT NO. .07

CORRECTED COPY

Condition 19. is amended to read:

19. Except as specifically provided otherwise by this license, the licensee shall possess and use radioactive material described in Items 6, 7, and 8 of this license in accordance with statements, representations, and procedures contained in:

A. Application dated March 9, 1984 and signed by Allan Chin, President;

B. Letter with attachments dated August 21, 1984 and signed by Allen Chin, President;

C. Letters dated October 4, 1984 and October 31, 1984 and signed by Allan Chin, President;

D. Letters dated January 10, 1985 and January 17, 1985 and signed by Tom Fisher for Allan Chin, President;

E. Letter dated August 16, 1985 and signed by Allan Chin, President; and

F. Letter with attachment dated December 10, 1985 and signed by Allan Chin, President.

The Georgia Department of Human Resources' Rules and Regulations for Radioactive Materials, Chapter 290-5-23 shall govern the licensee's statements in applications or letters, unless the statements are more restrictive than the regulations.

FOR THE GEORGIA DEPARTMENT OF HUMAN RESOURCES

DATE March 12, 1986

BY Thomas E. Hill

Form 2664

January 16, 1987

Mr. Will Ingram
Radiological Health Section
Georgia Department of Human Resources
878 Peachtree Street, NE
Atlanta, Georgia 30309

Dear Mr. Ingram:

Attached are the revisions to our Radioactive Material License number GA-868-1, that you and I discussed on December 29, 1986.

If you have any questions, please contact me.

Sincerely,

Tom Fisher
General Manager

TDF/cc

Enclosures

RECEIVED
JAN 27 1987
RADIOLOGICAL
HEALTH UNIT

Radiation Sterilizers Incorporated, 2500 Mellon Court, Decatur, Georgia 30035/Telephone: (404)981-4077

Attachment
Application for Radioactive Material License
Reference U.S.N.R.C. Regulatory Guide 10.9
Item No. 131

The ventilation rate through this facility is higher than similar facilities to minimize ozone concentrations. One 4,000 cfm blower is located on the roof to exhaust the air through a roughing filter.

The intake and exhaust vents are located in opposite corners of the radiation cell.

Experience in using this system at the Tustin and Schaumburg facilities assures that less than 0.1 ppm levels of ozone are maintained.

Ref. Section No. 3 "Gamma Cell Safety System"
Section No. 16 "Ventilation System"

Section No. 7

Design Safety Analysis

Entry to Cell Through the Vent

Unauthorized entry through the vent ducts is prevented by a steel grill cast into the vent openings at the roof level.

Ventilation System

The ventilation system is provided with a filter system which will prevent the escape of any possible contamination from the cell. The blower is interlocked to the fire alarm system such that it will be turned off in the event of a fire signal.

Fire in Cell

The cell is equipped with a sprinkler system in the event there is a fire in the cell. The vent is monitored by a smoke and temperature detector and if either is activated, the source will be lowered, the conveyor stopped, and the ventilation fans turned off.

7

Section No. 16

Ventilation System

The ventilation system is necessary to remove ozone and heat from the cell. The ozone is produced through ionization of the oxygen in the air. The heat is generated from absorption of the gamma rays by the product carriers and shielding.

Several theoretical equations have been derived to predict the generation of ozone brought about by the interaction of gamma rays and oxygen. Sample calculations are included herein as examples.

If the theoretical numbers of ozone generation are used to size a ventilation system, a very large fan would be required to reduce the ozone concentration to the 0.1 ppm acceptable level. Fortunately ozone is a very unstable material and rapidly destroys itself by recombination. Reported G-values range from 0.1 to 20 depending on temperature, humidity and geometric considerations.

The RSI facilities have ventilation rates through the cell of 4,000 cfm. This rate is twice that of comparable sized facilities. A percentage of the air is sucked through the maze and discharged through the roof thereby maintaining a negative pressure differential between the cell and the warehouse area. This system has proven to be very adequate as evidenced by the absence of ozone upon entering the cell after the sources are lowered. The nose is an excellent ozone detector, with the lower level of detection being around 0.05 ppm. At 0.1 ppm, definite irritation occurs.

The air, as it leaves the cell, passes through a roughing filter.

A steel grate is embedded into the roof at the vent exit to prevent anyone from climbing down through the vent duct.

Smoke detectors and temperature sensors are installed in the exit vent to detect fires in the cell. These are interlocked to shut off the fans when a fire is indicated. This will tend to smother the fire and prevent clogging of the filters.

March 19, 1987

Mr. Will Ingram
Radiological Health Section
Georgia Department of Human Resources
878 Peachtree Street, NE
Atlanta, Georgia 30309

Dear Mr. Ingram:

Per our phone conversation on February 2, 1987 concerning the emergency power units failure, our corporate safety committee has recommended that the interim manual operating procedure we initiated be made a permanent procedure. Our safety committee believes that manually lowering the sources during a power outage reduces the problem that could exist from automatically lowering the sources.

Attached is a copy of the new procedure that would replace the original emergency power procedure in our license for your review.

If you have any questions please contact me.

Sincerely,

Tom Fisher
General Manager

TDF/cc

Enclosures

RECEIVED
MAR 25 1
RADIOLOGICAL
HEALTH UNIT

Radiation Sterilizers Incorporated, 2300 Mellon Court, Decatur, Georgia 30035. Telephone: (404)981-4077

MANUALLY LOWERING
SOURCE RACKS

In the event of a power outage following procedures must be completed if the power is not restored within one minute.

1. Make no attempt to enter the cell.

2. One of the following must be contacted if at all possible:

First:	Tom Fisher	564-1745
Second:	Jerry Tallent	483-8075
Third:	Stan Clipson	972-4602
Forth:	Adam Clipson	469-0280

3. Once an attempt to contact one of the above has been made the lead operator will begin the following procedures bearing in mind that the process is divided into two steps:

Step #1: Shielding Isotope

Go to the roof of the cell and locate the manual brake release arm on source hoist #1. Pull the manual release arm back and allow the racks to lower two or three feet and release the arm. Repeat this action until the racks have been lowered approximately seven feet.

Move to rack #2 and repeat this process. Then move to rack #3 then Rack #4.

DO NOT enter the cell. Radiation levels in the cell may still be very high.

Step #2:

One rack at a time continue to lower the racks as in step #1. Speed is not an issue now since the sources are shielded substantially enough to protect the product. Watch the rabbits closely to prevent an overtravel at the bottom of the pool. Once all racks are lowered completely secure the system by locking the conveyor room doors. Monitor the entrance to prevent entry until the RSO or his designee arrives or power is restored.

Once power has been restored normal restart procedures may be initiated.

IMPORTANT NOTE

The cesium racks are heavier than cobalt racks and must not be allowed to lower too rapidly. Lower the racks only two or three feet at a time. Cesium racks are racks number 1 and 4.

When lowering any rack it is important to watch the cables. If they become slack, stop immediately and notify personnel in item #2.

RADIATION STERILIZERS INCORPORATED

RECEIVED
MAY 1 1987
RADIOLOGICAL HEALTH UNIT

April 30, 1987

Mr. Will Ingram
Radiological Health Section
Georgia Department of Human Resources
878 Peachtree Street, NE
Atlanta, Georgia 30309

Dear Mr. Ingram:

I would like to amend our key control policy that was submitted in our license, GA-868-1, to the state on January 15, 1986 [illegible] read as follows:

Keys

a. Console Key
b. Roof Latch Key
c. Machinery Room Keys
d. Machinery Room Panel Keys
e. Electrical Box Keys

[illegible]ly authorized personnel, production manager, shift supervisors and any material handler who has satisfactorily completed the supervisors requirements, will have access to keys that would allow entry into restricted areas of the building.

a. There will be only one console key available for operating the control console at any time during a 24 hour period. The RSO will have the other console key locked in his desk. If at any time the building is not operational the console key will be returned to the RSO or his designee.

b. The roof latch keys will also be locked up in the RSO's desk and will only be issued to authorized personnel upon loading/unloading radiation sources or to do maintenance on the roof of the building. When loading/unloading of radiation sources or maintenance on the roof is completed the key will be returned to the RSO.

c. The two doors leading to the tote transfer room will have one key staged so that it will be accessible to all shift supervisors.

d. The three console panels in the tote transfer room, programmable controller, electrical and safety annumerator panel, will have one key issued to the production manager who in turn will stage the key in the console room so that each shift supervisor will have access to the key in order to perform maintenance on the system.

e. The electrical panel boxes on top of the cell will be kept locked and the key will be staged in the control console room along with keys in item #d.

f. All keys not issued in items a-e will be locked up in the General Manager's office.

If you have any questions please contact me.

Sincerely,

Tom Fisher

Tom Fisher
General Manager

TDF/cc

September 10, 1987

Mr. Will Ingram
Radiological Health Section
Georgia Department of Human Resources
878 Peachtree Street, NE
Atlanta, Georgia 30309

Dear Mr. Ingram:

Per our phone conversation on September 4, 1987, concerning our request to increase the 30 second delay time to 45 seconds. This increase in time will allow more time to visually assure that everyone is out of the cell prior to setting the safety system up for operation.

The change is in section No. 3, "Gamma Cell Safety System", of our license.

If you have any questions please contact me.

Sincerely,

Tom Fisher
Vice President of Operations

TDF/cc

RECEIVED
SEP 11 1987
RADIOLOGICAL
HEALTH UNIT

Radiation Sterilizers Incorporated, 2330 Mellon Court, Decatur, Georgia 30035/Telephone: (404)981-4077

MELVIN W. CARTER, Ph.D.
Consultant
RADIATION PROTECTION

September 14, 1987

Mr. Thomas E. Hill, Chief
Radioactive Materials Unit
Radiological Health Section
Georgia Department of Human Resources
878 Peachtree Street, N.E.
Atlanta, Georgia 30309

Dear Mr. Hill:

Reference is made to our meeting and discussion with Ms. Lynnda Jones on September 11, our visit to Radiation Sterilizers Incorporated (RSI) on the same date and meeting with its Manager, Mr. Thomas Fisher, and copies of the relevant correspondence exchanged between RSI and the RHS/DHR.

Based on my radiological protection evaluation of the RSI facilities and the background information I reviewed, the following recommendations are presented for your consideration:

1. It is suggested that a standard layout drawing of the RSI facility be made a part of the RSI files in order that pertinent comments and discussions could be based on common terminology and nomenclature. For examples, the hot cell itself would be identified as would the entrance maze, the machine room, the area over the hot cell, and the room "beyond the sliding doors" and immediately adjacent to the maze entrance. For our purposes, I'll identify this latter room as Room X.

2. As RSI has requested, I would recommend that Room X be defined as a radiation control area for which access is limited and controlled. Therefore, RSI workers would have access to the "machine room" (outside the sliding doors into Room X) and to the area over the maze and the hot cell (presently accessible via a permanently installed steel ladder).

   This access would be for purposes of operation, maintenance, and repair. It would include, for example, access to the area above the hot cell to permit manual lowering of the source racks in the event of a power failure.

4621 Ellisbury Drive, Atlanta, Georgia 30338
(404)894-3745 or 458-9474

3. The space above Room X would also be an inherent part of the radiation control area and thus the third dimension (vertical dimension) would be included in its definition in addition to its length and width.

4. The space identified in Item 3 above should be protected with a positive barrier to limit and control access without authorized permission. This positive barrier could take the form of a six-foot cyclone fence around its two free sides, namely the one towards the maze and above the second floor (floor over the maze and which now has a metal hand rail) and the side towards the machine room and immediately above the partial partition containing the sliding doors.

   The fence should include an appropriate gate with a padlock and key. The key would be available only to those authorized to enter this area for repair and maintenance activities on the tracks or motor.

   Each outward side of the fence (that facing towards the area above the hot cell and that facing the machine room) should have a standard "High Radiation Area" warning sign.

5. Entrance into Room X and the space above Room X would represent entrance into a radiation controlled area. This would require that the source racks be lowered (shielded position) and authorized entry procedures be followed.

Please let me know if there are questions or if I can provide additional detail. Mrs. Crumbley, at 894-3718, can provide telephone contact with me if this is needed prior to September 24 which will be my return date to Atlanta.

Sincerely,

Mel Carter/b

Melvin W. Carter

MWC/bc
cc: Ms. L. Jones

September 25, 1987

Mr. Will Ingram
Radiological Health Section
Georgia Department of Human Resources
878 Peachtree Street, NE
Atlanta, Georgia 30309

Dear Mr. Ingram:

Per our phone conversation on September 16, 1987, concerning our request to require only "Radiation Employees" to wear film badges while working. The changes in section #6 item #8 of our license. If you have any questions please contact me.

Sincerely,

Tom Fisher
Vice President of Operations

TDF/DP

RECEIVED
SEP 1987

November 11, 1987

Mr. Will Ingram
Radiological Health Section
Georgia Dept. Human Resources
878 Peachtree Street, NE
Atlanta, Georgia 30309

Dear Mr. Ingram:

With the addition of the walled in area above the cell and over the sliding doors in the machinery our key control policy has been revised plus a new procedure for gaining entrance through the mezzanine door has been established.

We hope the above information meets with your approval and that the non-compliance issue, of February 18, 1985 can now be found in compliance.

If you have any questions please contact me.

Sincerely,

Tom Fisher
Vice President of Operations

TDF/dp

Enclosures

RECEIVED
NOV 13 1987
RADIOLOGICAL
HEALTH UNIT

[illegible] Incorporated, 2300 Mellon Court, Decatur, Georgia [illegible] Telephone [illegible]

Procedure for Using Mezzanine
Door on Top of Cell

1. Before access through the mezzanine door on top of cell can be accomplished, the following procedure must be completed.

2. Mezzanine Door Entrance Procedure: Entrance through the mezzanine door on top of cell will be gained by lowering the sources, turning the console key to off, removing it, and then placing the console key in safety enumerator panel and actuating. Entry through the mezzanine cell door can then be made carrying an operable survey meter.

3. Once work has been accomplished the cell mezzanine door will be locked and normal start up procedures used.

#30

KEYS

a. Console Key
b. Roof Latch Key
c. Machinery Room Keys
d. (3) Item Machinery Room
e. Mezzanine Door Key

Only authorized personnel, production manager, shift supervisors and any material handler who has satisfactorily completed the supervisors requirements, will have access to keys that would allow entry into restricted areas of the building.

a. There will be only one console key available for operating the control console at ant time during a 24 hour period. The RSO will have the other console key locked in his desk. If at any time the building is not operational the console key will be returned to the RSO.

b. The roof latch keys will also be locked up in the RSO desk and will only be issued to authorized personnel upon loading/unloading radiation sources or to do maintenance on the roof of the building. When loading/unloading of radiation sources or maintenance on the roof is completed the key will be returned to the RSO.

c. The two doors leading to the tote transfer room will have one key issued to each shift supervisor and production manager.

d. The three console panels in the tote transfer room, programable controller, electrical and safety annumerator panel, will have one key issued to the production manager who in turn will stage the key in the console room so that each shift supervisor will have access to the key in order to perform maintenance on the system.

e. There will be only one mezzanine door key issued and it will be to the maintenance manager. The spare keys will be locked up in the RSO desk.

November 24, 1987

Mr. Will Ingram
Radiological Health Section
Georgia Department Human Resources
878 Peachtree Street, NE
Atlanta, Georgia 30309

Dear Mr. Ingram:

Per our phone conversation on November 20, 1987, I am requesting that the area beyond the floor to ceiling, machinery room, be reclassified as an unrestricted area.

The request is being made because of the addition of the walled in area above the cell and over the sliding doors.

If you have any questions, please contact me.

Sincerely,

Tom Fisher
Vice President of Operations

TDF/cc

RECEIVED
DEC 1 1987
RADIOLOGICAL HEALTH UNIT

Mellon Sterilizers Incorporated, 2300 Mellon Court, Decatur, Georgia 30035/Telephone: (404)551-4077

GEORGIA INSTITUTE OF TECHNOLOGY

ENVIRONMENTAL RESOURCES CENTER
203 OLD CIVIL ENGINEERING BLDG
ATLANTA, GEORGIA 30332

(404) 894-3776

May 23, 1988

Tom Fisher
RSI
2300 Mellon Court
Decatur, GA 30035

Dear Mr. Fisher:

The water sample that you submitted on May 10, 1988, for analysis was measured by gamma-ray spectrometer, with the following results, in picocurie per liter:

Laboratory No.	Sample ID 4/25/88	Cs-137, pCi/l
S3677	Radiation Sterilizers, Inc.	48

No other radionuclides were detected (Co-60 < 2 pCi/l). The less-than value represents the 2-standard deviation value for the count rate measured for 50,000 seconds, after background subtraction.

Please let me know if I can provide further information.

Sincerely yours,

Bernd Kahn

Bernd Kahn

BK/rs

June 6 1988

Memo to: Mr Tom Hill
From: Mr Tom Fisher
Subject: Leaking Cesium Source and cleanup
Re: License number GA-868-1

Dear Tom,

Due to the leaking source and cleanup at Radiation Sterilizers Inc., no product will be processed until the leaking source and cleanup is completed.

Sincerely,

Tom Fisher

Radiation Sterilizers Incorporated, 2300 Mellon Court, Decatur, Georgia 30035/Telephone: (404)981-4077

STERILIZATION SERVICES, INCORPORATED

June 11, 1988

Mr. Thomas E. Hill
Acting Director, Radioactive Materials Unit
Radiological Health Section
Office of Regulatory Services
878 Peachtree Street, Suite 600
Atlanta, GA 30329

Dear Tom:

I have been advised that the USDOE is willing to assume the responsibility for the removal of the leaky Cs-137 source from RSI Decatur facility, concurrent with any other contamination with it.

This letter requests that the USDOE be recognized by the State of Georgia as an agency working under RSI's license to perform this task.

In general, the task will include all activities associated with the timely identification of the leaky source, its removal from facility and decontamination of of the facility to restore it to an operable condition.

DOE will use the combination of their own personnel, RSI personnel, and sub-contractors. The DOE coordinator will be Mr. Bobby Davis.

It is emphasized that these activities be accomplished in the most timely and expeditious manner for the benefit of all agencies involved.

Sincerely,

Allan Chin, President

AC:ck

James G. Ledbetter, Ph.D. (Commissioner)

47 TRINITY AVENUE, S.W. / ATLANTA, GEORGIA 30334-1202

June 15, 1988

Joe LaGrove, Manager
Oak Ridge National Laboratories Operations
U.S. Department of Energy
Post Office Box E
Oak Ridge, Tennessee 37831

Dear Mr. LaGrove:

This is to confirm the State of Georgia's request on June 11, 1988, for the Department of Energy's assistance to the state in managing an effort to remove a leaking radiation source at the Radiation Sterilizers Incorporated irradiation facility in Decatur, Georgia. It is our understanding that the Department of Energy is to identify the leaking Cesium-137 source and develop a plan for its safe removal. In addition, the Department of Energy will manage removal of the damaged source and cleanup and recovery activities. We also understand that removal and recovery activities will be coordinated by the Department of Energy with state and federal organizations and Radiation Sterilizers Incorporated.

We are enclosing for your information a copy of a letter to us from Dr. Allan Chin, President, Radiation Sterilizers Incorporated.

Should you have any questions concerning this matter, please let me know.

Sincerely,

James G. Ledbetter, Ph.D.
Commissioner

cc: J. Leonard Ledbetter
Martin J. Rotter
U.S.N.R.C. Region II

JGL/thc

UNITED STATES
NUCLEAR REGULATORY COMMISSION
WASHINGTON, D. C. 20555

June 17, 1988

Mr. John E. Baublitz
Acting Director
Office of Remedial Action
and Waste Technology
Office of Nuclear Energy
U. S. Department of Energy
Washington, D. C. 20545

Dear Mr. Baublitz:

This refers to the recent failure of one or more cesium-137 (Cs-137) sealed sources at Radiation Sterilizers, Inc.'s (RSI's) Decatur, Georgia facility, and to its implications for continued use of the same type of sources at RSI and other facilities licensed by the Nuclear Regulatory Commission (NRC) and Agreement States. The type of source in question is the Waste Encapsulation and Storage Facility (WESF) capsule (the source), each of which contains about 40,000 to 50,000 curies. These sources were fabricated at facilities operated for the Department of Energy (DOE). They are owned by DOE and are leased to users licensed by NRC or Agreement States. An essential part of the basis for NRC's authorizing licensees to use the sources was that the sources would maintain their integrity throughout the period of use at licensed facilities and that they would be returned to DOE at the end of use. Enclosure 1 lists the domestic facilities licensed to use these sources.

As a result of the failure of the source(s) at RSI, NRC must determine what steps need to be taken at the other licensed facilities to assure safety. Enclosures 2 and 3 are copies of Confirmatory Action Letters (CALs) that NRC has issued to its licensees as a short term response. The CALs require NRC licensees to increase monitoring to provide early notice of a similar failure and to implement certain emergency procedures if elevated Cs-137 levels are detected. Copies of Enclosures 2 and 3 have also been sent to Colorado for its use in preparation of a CAL to its licensee, Isotech. These steps, while enhancing safety, will not, of course, prevent the sources from leaking and the attendant problems associated with cleanup should they leak.

During the interim period until the cause(s) of source failure has been evaluated, NRC needs to decide whether continued use of the sources should be permitted and, if so, whether the conditions described in the CALs are sufficient to ensure safety of workers and the public. To make these decisions and similar decisions for the long term, we need the following information from you:

1502/2

1. The plans and schedules for determining the cause(s) of source failure. Among other things, this will give us an estimate of the length of the interim period until the cause of source failure is evaluated.

2. A preliminary evaluation of the likely or possible cause(s) of source failure and DOE's recommended precautionary actions, including recommendations for early detection and early isolation of a leaking source. In this regard we are particularly interested in knowing how source failure may be related to chloride stress corrosion, thermal cycling, impurities in the cesium chloride, quality of the water in the RSI, Decatur pool, defective quality control, or some combination of these or other factors that you can identify. As a corollary, we are also interested in how these factors influence any precautionary actions DOE might recommend.

3. Any DOE plans to recall the sources or to issue any advisory precautions to source users before the exact cause of source failure is established through laboratory analysis.

4. The results and conclusions of your review of the quality control of WESF sources in general and the 252 sources at RSI, Decatur in particular. We assume that this review will consider all aspects of quality control of both the inner and outer capsules, including jacket and end cap materials, procedures for closing the capsules, the processes and procedures used to examine the jackets, closures, etc., and the results of the various tests done on the sources, especially those used at RSI, Decatur.

We would appreciate responses to the above items as soon as possible or within 30 days of the date of this letter. Please call me at 492-3426 if you have problems meeting the requested response time.

Based on discussions at the June 13, 1988 meeting of DOE staff and contractors and NRC staff, we assume that DOE will provide oral and written notification of the RSI incident to all recipients or current possessors of these sources, both domestic and foreign. Please notify us if we can be of assistance in this regard.

Recognizing the significance of the RSI incident to the discharge of our health and safety responsibilities, we plan to stay abreast of progress at RSI, Decatur with regard to DOE's plans and schedules on managing the RSI cleanup through NRC's Region II office in Atlanta. We plan to consult directly with you and your staff on the other matters discussed above. Please feel free to call me if you have any questions on these matters.

4

We appreciate DOE's timely and helpful response to this pressing problem.

Sincerely,

Richard E. Cunningham, Director
Division of Industrial and
Medical Nuclear Safety
Office of Nuclear Material Safety
and Safeguards

Enclosures:
1. List of Domestic Licensed Facilities Using Cs-137 WESF Sources
2. NRC ltr dtd 6/13/88 to RSI, Westerville, Ohio
3. NRC ltr dtd 6/18/88 to Applied Radiant Energy Corp., Lynchburg, Virginia

cc w/enclosures:
Delbert Bunch, DOE
Richard Starostecki, DOE
John Setser, State of Georgia
J. Philip Stohr, NRC, RII
Charles E. Norelius, NRC, RIII

5

1503/4

Department of Energy
Oak Ridge Operations
P O Box
Oak Ridge Tennessee 37831

June 24, 1988

EO-88-332

Mr. Allen Chin
Radiation Sterilizers, Inc.
3000 Sand Hill Road
Building #4-245
Menlo Park, CA 94025

Dear Mr. Chin:

INVESTIGATION OF CESIUM 137 - APPOINTMENT AND PURPOSE

As we discussed during our meeting yesterday, I have been appointed by Joe La Grone, Manager, Oak Ridge Operations, as chairman of a board which is to conduct a Type B investigation in early June 1988, on the Cesium 137 incident at you commercial facility in Decatur, Georgia. I am to prepare an investigation report in accordance with DOE Order 5484.1 requirements (a copy of this order will be provided under separate cover). My assignment is to determine the cause of this incident and the adequacy of DOE's administrative control and incident response systems. The scope of the investigation consists of two area: The first deals with the specific incident and related issues (technical aspects, capsule quality, safety analyses, control systems, response, etc.); and the second area deals with management and administrative matters (lease agreement, contract administration, controls, financial arrangements, licensee operational commitments, etc.).

The purpose of the investigation is to provide a systematic approach for examining details concerning the incident. The need for understanding the cause-effect relationship of this incident, the potential hazards involved, and what corrective actions are required to prevent a recurrence, is paramount. The intention of the accident investigation process is to improve systems and prevent accidents.

Also as we discussed during our meeting on Wednesday, I and the other investigation board members would like to meet with you and members of your Decatur staff during our upcoming visit to the facility. We will be in Decatur beginning Monday morning June 27, 1988, and would like to arrange a meeting with you on Monday afternoon.

In addition we will wish to see the documentation which RSI has concerning its operational procedures and history of the Cesium cylinders. A more defined listing of this documentation will be provided shortly.

Through the above discussions, we wish to provide RSI, the opportunity to make input to this investigation and to ensure that the investigation board understands clearly the information resulting from the investigation. RSI, will have the opportunity to comment on all portions of the draft report for technical accuracy.

Your assistance and cooperation are appreciated.

Sincerely,

Ronald O. Hultgren

Ronald O. Hultgren, Director
Enriching Operations Division

Enclosure (1) Under Separate Cover

July 1, 1988

EO-88-346

Mr. Thomas E. Hill
Environmental Radiation Specialist, Sr.
Radioactive Materials Unit
Radiological Health Section
G.M.H.I. Room 425 - South
1256 Briarcliff Road, N.E.
Atlanta, GA 30306-2694

Dear Tom:

INVESTIGATION OF CESIUM-137 LEAK

First I want to thank you for the cooperation extended to the DOE investigation team. Your help and that of your staff has been of great assistance to us.

As a result of our conversation on June 29, several documentation needs were cited which require more research. Specifically we would appreciate any documentation which deals with the following subjects:

1. The absence of HEPA filters on the RSI facility.

2. The removal of a thermal couple to monitor source temperatures.

3. Any bulletins provided to you by NRC concerning the safety of high radiation capsules.

We would also appreciate a copy of the agreement which the State of Georgia has with the NRC.

You provided a partial list of recommendations during our conversation which you would try to implement if a future facility using Cesium-137 capsules attempted to achieve an operational license in Georgia. We understand that these are your personal findings which may not reflect State of Georgia policy and that your list may change. Still, we respect your findings concerning this incident and will appreciate your thoughts.

James G. Ledbetter, Ph.D./Commissioner

Radiological Health Section
OFFICE OF REGULATORY SERVICES - ROOM 600
878 PEACHTREE STREET, N.E. / ATLANTA, GEORGIA 30

July 28, 1988

Mr. Ronald O. Hultgren, Director
Enriching Operations Division
Department of Energy
Oak Ridge Operations
Post Office Box 2001
Oak Ridge, Tennessee 37831-8651

Dear Mr. Hultgren:

RE: Radiation Sterilizers, Inc. (RSI)

In response to the questions in your letter dated July 1, 1988 t' following documentation is offered:

1. Concerning the absence of the HEPA filters: Attached is corresponden dated January 16, 1987. The correspondence has revisions attach of RSI's policies and procedures. The revisions delete all referenc to the HEPA filters. The submitted revisions were approved by o office and resulted in amendment number .09 to RSI's radioactive materi license.

2. Concerning the removal of a thermal couple to monitor sour temperatures: Attached is correspondence dated January 28, 1986 whi recommends that based on temperature data collected that the irradiat operators be allowed to drop the requirement for the themocouple the source rack. Based on this recommendation our office issued corrected copy of amendment 07. (attached) which deleted the thermocoup requirement in Condition 32 of the orginal amendment .07 (attached).

3. Concerning bulletins provided by NRC: A member of our staff call you on July 5, 1988 to advise you that the DOE investigation team h copied all of our bulletins. You indicated in the conversation th those copies received by the investigation team should be adequa and that no additional copies were needed at this time.

If further information is needed for the investigation please do n hesitate to call me at (404) 894-5795.

Sincerely,

Thomas E. Hill

Thomas E. Hill, Acting Director
Radiological Health Section
Office of Regulatory Services

TEH/gcr

Enclosure

AN EQUAL OPPORTUNITY EMPLOYER

MISCELLANEOUS LICENSING CORRESPONDENCE

INDEX TO MISCELLANEOUS LICENSING CORRESPONDENCE

Date	From	To	Subject
8/83	Excerpts from DOE/DP-0013, and Vol. 2		Recovery and use of ^{137}Cs from Defense Wastes: Policy Strategy.
10/7/83	DOE (Jicha)	NRC (Baggett)	Re: Meeting with Tom Anderson, Byproducts Division, to discuss NRC registry of WESF Capsules.
2/27/84	DOE (Reep)	[Trip Report]	Briefing on integrity of cesium capsules, references on WESF capsules, actions
11/5/84	RSI (Chin)	DOE (Dayani)	Request for additional information
1/24/85	Rockwell (Gasper)	RSI (Chin)	Additional WESF capsule handling information

Excerts from DOE/DP-0013, Vol.2 August 1983

Recovery and Use of ^{137}Cs from Defense Wastes
Policy and Strategy

It is a policy of the DOE Defense programs to encourage widespread use of byproducts .... from defense and other nuclear activities. ... Past commercialization of .... nuclear-based ventures .... have been discouraged by unanticipated restrictive regulation. ... In implementing its policy of encouraging widespread use of byproducts, the DOE proposes sufficient engineering demonstrations of first-of-a-kind byproduct applications that technical operability, safety, environmental and public acceptability .... are established for each generic application.

DOE participation will normally be limited to one engineering demonstration of a .... specific new application of technology. In some instances, second or third demonstrations may be necessary to accomplish the objectives. .... DOE .... will supply byproduct materials for demonstrations and commercial applications (and) will accept the return of radioactive materials at the end of their useful life. The Doe's commitment to the operation of an engineering prototype .... will be limited to 4 years, after which the facility and its operation will be the sole responsibility of the user agency.

Interface agreements will be prepared, as appropriate. Regulatory agencies with which interfaces will occur include: The .... Nuclear Regulatory Commission (NRC); ....A determination will be made of how many demonstration units of a given generic type are required for each application.

....Thirty years after reactor discharge ^{137}Cs and ^{90}Sr constitute 98% of the thermal energy and 97% of the penetrating radiation in high level waste. ... Removal of those two byproducts has the same effect as aging the wastes hundreds of years.

The cesium-137 irradiator program .... is directed toward the design, construction and evaluation of prototype demonstration irradiators and transfer of the technology to the private sector.... for sewage sludge irradiators .... (and) for food irradiation. ... (A) pilot irradiator was built and is operated by the Sandia National Laboratory. The irradiation source is one megacurie of cesium-137 in standard capsules fabricated in the Hanford WESF. This is the only irradiation facility in the U.S. currently using cesium-137. Sewage sludge, grapefruit and mangoes have thus far been irradiated. ~~(Sewage Sludge Engineering Demonstration Irradiators)~~.

Sewage Sludge Engineering Demonstration Irradiators

By agreement with the City of Albuquerque, New Mexico, a sewage sludge irradiator is being designed and is scheduled for construction. Initially this irradiator will use 5 MCi of cesium-137 in the form of WESF capsules

.... expansion (about 1995) will increase the source to 18 MCi of cesium-137. This irradiator will function as a commercial demonstration facility. ... The treated sludge will be used .... as a soil conditioner for nearby public lands.

....Preliminary planning has been done on a second plant to be located at Idaho Falls, Idaho .... to convert .... sludge to a marketable product for sale to farmers and ranchers in the area.

Food Engineering Demonstration Irradiators

A small transportable cesium-137 irradiator (TPCI) has been conceptually designed and will be under construction in 1983. ... For .... fruit, nut and field crops .... dose requirements .... can be .... determined only by means of pilot tests near the harvest site. ... The irradiation sources will be transported separately in a DOT -approved cask. The irradiator will be constructed in a semi-truck trailer .... Following successful research and development testing in TPCI, the next step in technology transfer toward commercialization is the construction of a near-commercial-sized fixed facility. ... The irradiation plant will be operated as a demonstration facility for an agreed-upon period (perhaps 4 years) to satisfy the need for verification of design, operation parameters, the economics of the process, and public acceptance of irradiated food products. ... Title and operation of the plant would then revert to private ownership or the plant be sold to private ownership and operated subject only to the provisions of a NRC license. ... A major step toward commercial-scale disinfestation of pork by irradiation is the current plan for a joint venture for the construction and testing of a demonstration-scale cesium-137 irradiator.

Improved .... Capsule

The currently-used WESF cesium-137 capsule .... was designed for water basin storage of cesium chloride as a waste material. ... The capsule is a less efficient gamma radiation source than desirable. The current TPCI conceptual design offers an opportunity to investigate a smaller diameter capsule. ...

An analysis will be performed to quantitatively determine the incentives for improving the capsule design for future irradiation facilities. Capability can be installed in WESF to produce cesium-137 capsules of the improved design from future PUREX waste and/or to continue to fill the current storage capsules with cesium chloride.

New Facilities

Cost estimates have been prepared for the new demonstration irradiator facilities. These costs are based on the conceptual design and are only preliminary.

	Completion Date	Cost Estimate ($ Million)
Transportable Cesium-137 Irradiator	1985	3.0
Albuquerque Sewage Sludge Irradiator	1985	3.5
Pork Irradiator	1985	2.5
Fruit, Nut and Field Crop Irradiator	1985	4.0
Idaho Falls Sewage Sludge Irradiator	not determined	not determined

Cesium-137 Irradiator Demonstration Costs
($ in Millions)

	FY-1983	FY-1984	FY-1985	FY-1986
Operating	3.0	5.0	3.0	3.5
Capital	5.0	5.0	0	5.0
Capital equipment	0.65	0.6	0.4	0.1

Improved NDE Technology for Byproduct Capsules

Careful nondestructive examination (NDE) is made of every WESF capsule, both strontium and cesium, immediately after filling. NDE of radioisotope-filled capsules is complicated because the capsules are really two concentric capsules, they are thermally hot, and they have high gamma dose rates. The NDE procedure at WESF is satisfactory for the intended deployment of the capsules, i.e., extended storage in a water-filled pool on the Hanford site. However, as radioisotope-filled capsules are deployed for use at locations physically separated from a government production site and the attendant specialized facilities, it may be necessary to periodically examine the capsules nondestructively to identify and measure any capsule anomaly so that corrective action can be taken before there is any detectable leakage of radioactive material from the capsule.

Technology developed for examining nuclear fuel will be utilized to develop NDE equipment and methods for examining weld quality, stress-corrosion crack development, intergranular corrosion and wall thinning by internal or external chemical corrosion on capsules filled with radioisotopes and deployed for beneficial use. Such examinations should be made soon after filling, and, especially for cesium-137 irradiation sources, repeated periodically in the irradiation facility. This will greatly enhance the safety and the public confidence in the safety of the irradiator.

This effort will 1) establish the design and inspection criteria for capsules and liner closures to ensure inspectability, 2) establish the feasibility for continuous or periodic monitoring of the capsule in use, 3) design and build an inspection system, and 4) design and build a prototype monitoring station.

Byproduct Inventories

.... Cesium-137 .... (is) .... available from currently stored waste and from future processing at Hanford, at the Savannah River Plant (SRP), at the Idaho Chemical Processing Plant (ICPP), and (potentially) from commercial spent fuel. .... Although a byproduct may be potentially recoverable from a given source, it does not necessarily follow that recovery is either technically or economically feasible. At present .... emphasis has centered on safe, cost-effective management of optimized heat or radiation sources. In future processing, changing the emphasis to byproduct packaging and the imposition of appropriate controls will ensure high-quality sources. Cesium-137 recovery, but not packaging, is currently planned at SRP for waste management purposes. The recovered cesium-137 maybe added to the sludge and vitrified, separately vitrified, or converted to a suitable byproduct form and packaged for byproduct use....

The minimum cesium-137 content of fission-product cesium acceptable for use in cesium-137 irradiators has not been specified. ... Ninety MCi of cesium-137 is currently available at Hanford for irradiator utilization. A "typical" irradiator would use 2 to 10 megacuries, so the current inventory is sufficient to fuel 10 to 40 "typical" irradiators. ... The cumulative amount of cesium-137 recoverable from Hanford operations and from SRP by 1990 will be about 250 mega curies. ...

Environmental Protection

The defense byproducts program will be managed to conform with applicable environmental laws and regulations such as the National Environmental Policy Act of 1969 (NEPA). This includes Environmental Assessments of byproduct applications that have potential environmental impact. Environmental assessments will be prepared and reviewed by appropriate agencies during the planning stage of an applications project. Upon review of the environmental assessment for major byproduct projects, the Environmental Protection Agency may require an Environmental Impact Statement. Sufficient time must be allowed for completion of the EIS process before any activities are begun that can affect the environment.

Commercial Applications

Commercial applications will be licensed and regulated by the Nuclear Regulatory Commission according to the Code of Federal Regulations. Equipment manufacturers and/or byproduct users will be responsible for obtaining general or specific licenses. Byproduct materials recovered, purified, converted to a product form and sealed in containers at DOE

facilities will be prepared so as to meet applicable license requirements. .... the Atomic Energy Act (Section 91 B) exempts activities at DOE facilities required for major commercial byproduct facilities. These reports will treat the health and safety aspects of the application and of the facility and its operation. ...

Cesium-137 Applications

Five cesium isotopes are produced by nuclear fission. Cesium-133 is stable, and cesium-135, with a half-life of 2×10^6 years, is nearly stable. Cesium-134 and 136 have relatively short half-lives (2.1 years and 13 days) and low abundance. Cesium-137 has a half-life of 30.2 years, a specific activity of 87 curies per gram (100% basis), and produces 0.42 W_t per gram (100% basis). The $^{137}Cs/Cs$ ratio is about 0.43 in freshly discharged fuel.....

The activities and applications for radiation with cesium-137 are summarized in the following subsections. The summary is by no means exhaustive, and additional scenarios can and should be developed to meet national and international needs.

Sandia Cesium-137 Irradiator

The cesium-137 engineering demonstration irradiator now in operation at the Sandia National Laboratory .... is a key element in the successful use of byproduct cesium-137 in the irradiation industry. This irradiator uses capsules from the Hanford Waste Encapsulation and Storage Facility (WESF) containing a total of 1 MCi of cesium-137. The Sandia irradiator is being use to evaluate the use of byproduct cesium-137 to irradiate many kinds of materials, to optimize irradiation conditions, and to develop design data for generic demonstration plants. Sewage sludge, grapefruit, and mangos have been irradiated.

Control of Pork Trichinosis

The "trichinosis stigma" costs the U.S. pork industry substantial losses in domestic and world markets. Current research results, illustrated in Table A.1, show that irradiation at doses as low as 10 to 30 krad disinfests pork of the parasitic nematode, trichinella spiralis, responsible for trichinosis in man. As shown in the table, reproduction of larvae is stopped by doses as low as 10 krad. ... An ongoing cooperative effort among the USDA, DOE, and the port industry is evaluating the impact of trichinosis in the U.S. and the potential benefit from a pork irradiation program using cesium-137. Existing technology is being used to demonstrate the feasibility of producing pork "certified trichina-safe" by gamma irradiation of split hog carcasses. A major step toward commercial-scale use is the construction and testing of a demonstration-scale irradiator by a Federal laboratory or an educational instution to establish the feasibility of the process and to obtain information required for fuel-scale commercial implementation.

TABLE A.1. Trichina Survival Data[a]

Radiation Dose, krad	5-Day Adults, per rat	Muscle Larvae, per rat
0	1,800	325,000
5	1,800	84,000
10	900	<1
20	<1	0
30	0	0
50	0	0

(a) Data obtained from the USDA Agricultural Research Service, Beltsville, MD.

Disinfestation of Citrus Fruits

Florida citrus is currently fumigated with ethylene dibromide (EDB) for insect disinfestation. The EPA proposes to ban EDB, a suspected carcinogen, from further use after June 1983. Irradiation with cesium-137 is being investigated as an alternative to disinfestation by EDB fumigation. Recent research on irradiation of Florida-grown grapefruit infested with Caribbean fruit fly larvae indicate that disinfestation occurs at a dose of 25krad. Conversion from current fumigation practices to irradiation would cost only an additional 1 to 2 mills per pound of fruit processed.

Control of Codling Moth

The codling moth infests numerous agricultural crops of significant economic value. Host commodities include apples, pears, crab apples, quince, cherries, walnuts, and many others. High-cost pest-control measures greatly reduce the damage but cannot eliminate this pest.

Apple production in the U.S. is projected to increase by 40 to 60 percent by 1988. Potential major markets include Japan and Korea, where the codling moth does not exist. To prevents its introduction, these countries impose embargoes on host commodities such as apples. Therefore satisfactory disinfestation procedures must be developed before these markets can be realized. Gamma irradiation with cesium-137 is effective as a quarantine treatment. Irradiation of larvae, at dosages less than 16 krad, has prevented emergence of 99 percent of adult moths. Absorbed doses of 40 krad have been shown to sterilize adults. Most varieties of apples tolerate doses as high as 100 krad, permitting flexibility in irradiator design. An economically attractive international market potential is therefore created with the use of gamma irradiation as a quarantine treatment.

Further research to verify efficacy and quantify optimum treatment protocols and doses is needed to develop the full potential of the cesium-137 treatment process. An expanded research program is now under consideration by the USDA. Major facilities for cesium-137 irradiation, however, exist only in Albuquerque, New Mexico. Samples transported long distances for tests are subject to transportation damage, ripening, time of irradiation after harvest, and other such effects, which can all create anomalies in research results. A transportable irradiator research facility is needed to support the many research needs at significantly different locations and/or different seasons of the agricultural year. ... A "binary" design enabling separate transport of the irradiator chamber and the cesium-137 source appears promising for the transportable unit.

Disinfestation of Dried Fruits and Tree Nuts

Some fumigants used in disinfestation of nuts and dried fruits leave residues that can limit the marketability of these commodities. Although the quantities produced are very large, some treatment by irradiation may prove to aid in solving the infestation problem. Pests such as navel orange worm, codling moth, Indian meal moth, red flour beetle, and sawtoothed grain beetle are all susceptible to gamma irradiation. Fifty krad will control even the most resistant beetle species and immature stages of moths. Even lower doses (20 krad) are expected to control reproduction and growth of young larvae. A joint industry/USDA/DOE research program to examine the potential of irradiation as a treatment for raisins, prunes, walnuts, almonds, pistachios, etc., is being investigated.

Irradiation of Municipal Sludge for Agricultural Uses

With more restrictive regulations and expanding populations, the processing and disposal of municipal sewage sludge is an ever-increasing problem for many cities. Irradiation of the sludge by cesium-137 is being examined as a method for solving the problem by converting a liability to an asset.

Two principal uses of municipal sewage sludge have been investigated: 1) as a low-analysis fertilizer and soil conditioner and 2) as feed for livestock to provide nitrogen, minerals and energy. To eliminate the potential health risk, sludge is irradiated with cesium-137 before it is applied to agricultural land or marketed to the public for general use. Irradiation with cesium-137 can eliminate bacterial, parasitic, fungal, and viral pathogens contained in the sludge.

Algae produced as a byproduct of municipal waste-water treatment can be fed to cattle, swine, poultry, or fish as a quality protein supplement. The algae are irradiated with cesium -137 to eliminate pathogenic hazards. In this way, irradiation permits the safe introduction of a quality product, grown on human waste, into the human food chain.

Two cities, Albuquerque, New Mexico, and Idaho Falls, Idaho, are investigating use of these technologies. The city of Albuquerque has entered into a cooperative agreement with DOE for construction of a full-scale cesium-137 sludge irradiation facility. Application of irradiation at Albuquerque is a critical step in gaining widespread acceptance of the technology and in encouraging its use at other municipal waste-water treatment plants.

Idaho Falls, Idaho, has found that additional treatment capability is necessary to handle its increasing volume of sewage solids. At the request of the City, sludge irradiation has been evaluated and found to be an economical and feasible method for treating the sludge and for producing a saleable sewage solids product. The City currently desires to enter into a cooperative agreement with DOE for construction and demonstration of the technology.

Cesium-137 (Availability)

Table B.7 gives the estimated inventories of cesium-137 available from the various sources. As discussed in the following sections, only a fraction of the cesium-137 listed in Table B.7 is potentially recoverable

3

for beneficial use. Depending on the effectiveness of the recovery and purification schemes, the cesium could also contain substantial amounts of chemical impurities.

Hanford

At Hanford cesium has been recovered from stored high-level wastes. The recovered cesium is being purified, converted to cesium chloride, and doubly encapsulated in small capsules of the same design as those for strontium. The encapsulated cesium chloride is stored in water basins at WESF. Cesium can similarly be recovered from future wastes generated in the processing of N-Reactor fuel. This encapsulated cesium chloride represents the only major U.S. source of currently available cesium-137.

About 80 percent of the cesium in the stored wastes has been recovered and is being converted to cesium chloride. The remaining 20 percent is contained in insoluble sludge layers in the waste tanks, salt cake, and double-shell slurry (residual liquor). It is estimated that up to about 95 percent of the cesium could be recovered from future PUREX wastes and converted to cesium chloride.

The cesium-137 content of the cesium chloride is generally quite low because of the age ofthe current waste. the chemical purity of the cesium chloride also varies, depending on several factors. The chlorides of sodium, potassium, rubidium, calcium and barium are the principal impurities. Other impurities result from corrosion of the processing equipment. Overall, impurities in the cesium chloride should be less than 10 wt%. Exact compositions are unknown because the cesium chloride product has not been subjected to chemical analysis.

TABLE B.7. Estimated Inventories of Cesium-137 from Various Sources

Source		Effective Inventory Date	kg	Ci	Watts (t)[a]
Hanford	- Cesium chloride capsules through 6/82	1/83	731	6.36×10^7	3.06×10^5
	- Cesium chloride capsules through 6/84	1/83	318	2.77×10^7	1.33×10^5
	- Stored wastes[b]	1/83	301	2.6×10^7	1.26×10^5
	- Future wastes	1/91	445	3.87×10^7	1.86×10^5
Savannah River Plant	- Current wastes	1/83	1170	1.02×10^8	4.90×10^5
	- Future wastes	1/2001	1250	1.09×10^8	5.24×10^5
Commercial Spent Fuel	- Accum. through 1981	1/83	6.0×10^3	5.2×10^8	2.5×10^6
	- Accum. through 2020	1/2021	1.3×10^5	1.1×10^{10}	5.5×10^7

(a) Values include decay of daughter products.
(b) Cesium contained in current waste, but not considered recoverable.

Table B.8 provides a summary of the cesium chloride encapsulated through 6/82. Variations in curie content among capsules not only reflect differences in the cesium-137 content and chemical purity of the cesium chloride, but in some cases, the extent to which the capsules were filled. ...

The cesium chloride produced at Hanford is encapsulated in 316L stainless steel canisters. The inner capsule has an inner diameter of 2 inches and an inner length of about 19 inches. Each capsule can hold up to about 3 kg of material.

Cesium recovered from future PUREX wastes would have a significantly higher cesium-137 content than that recovered from the current wastes.

^{137}Cs/Capsule, kCi	No. of Capsules	Total ^{137}Cs, kCi	Average ^{137}Cs/Capsule, kCi	Average Watts (t)/Capsule
<10	5	27	5.4	26.0
10-20	1	16	16.2	77.9
20-30	10	262	26.2	126
30-40	40	838	36.0	173
40-50	257	11,950	46.5	224
50-60	762	42,182	55.4	266
60-70	149	8,310	64.6	311
70-80	10	715	71.5	344
>80	0	0	-	-
	1,234	64,300		

(a) As of 7/82. An additional 2.8×10^7 Ci of recovered cesium will be encapsulated by the end of 1984.

Chemical purity of the cesium chloride prepared from future wastes will probably be similar to cesium chloride prepared from current wastes unless process improvements are initiated.

Savannah River Plant

The high-level wastes currently stored at the Savannah River Plant contain large quantities of cesium-137. Eighty percent of cesium-137 in the waste is contained in 11 storage tanks. The remaining 20 percent, not considered recoverable for beneficial use at this time, is not included in the inventory. Pertinent data on the cesium-137 in the tanks are given in Table B.9 The cesium-137 isotopic content of the cesium in the tanks is estimated to range from 20 to 40 percent.

Future generation of cesium-137 at SRP is estimated at 7×10^6 Ci/year, with the cesium-137 isotopic contnet of the cesium being about 40 percent.

TABLE B.9. Cesium-137 Contained in Current Stored Waste at Savannah River Plant - As of 1/83

Tank No.	Waste Volume,[a] gallons	Ci Cesium-137	Watts (t) Cesium-137
1-F	555,000	7.8×10^6	3.7×10^4
4-F	552,000	6.8×10^6	3.3×10^4
27-F	983,000	10.7×10^6	5.1×10^4
33-F	955,000	6.8×10^6	3.3×10^4
34-F	892,000	6.8×10^6	3.3×10^4
29-H	1,060,000	8.8×10^6	4.2×10^4
31-H	1,107,000	9.8×10^6	4.7×10^4
32-H	790,000	10.7×10^6	5.1×10^4
35-H	1,188,000	9.8×10^6	4.7×10^4
36-H	1,216,000	13.7×10^6	6.6×10^4
37-H	1,244,000	9.8×10^6	4.7×10^4
Total	10,542,000	101.5×10^6	48.7×10^4

(a) Liquid and salt.

Assuming production through the year 2000, the total cesium-137 inventory from future wastes at the end of the year 2020 would be about 1.09×10^8 Ci.

374

There are currently no facilities at SRP for purifying or packaging cesium-137. Such facilities could be constructed if increased demand for cesium-137 justifies the added capacity.

B. 3.3 Commercial Spent Fuel

Commercial spent fuel in storage at the end of 1981 contained an estimated 14,000 kg of cesium. the isotopic composition and characteristics of the cesium in the fuel vary with the time since the fuel was discharged from the reactor. The average composition and characteristics of the cesium in the fuel at the end of 1981 are given in Table B.10.

DOE estimates that spent fuel discharged fromcommercial reactors through the year 2020 will amount to about 279,000 MTHM. Assuming no interim processing, this stored fuel will contain an estimated 350,000 kg of cesium by the year 2020. Table B.10 shows the average isotopic composition and characteristics of the accumulated cesium (at the end of the year 2020).

Availability of cesium-137 from commercial spent fuel will depend on the restart of commercial fuel processing. If processing is restarted, the quality of the cesium-137 available for beneficial use can vary over wide ranges, depending on the age of the fuel being processed.

TABLE B.10. Average Composition and Characteristics of Cesium in Commercial Spent Fuel

Source	Effective Inventory Date	Isotope	Isotopic Analysis, at.%	kg	Ci	Watts (t)
Fuel in storage at the end of 1981	1/82	Cesium-133 (stable)	44.3	6,104	-	-
		Cesium-134	1.8	245	3.17×10^{8}	3.22×10^{6}
		Cesium-135	11.9	1,659	1.91×10^{3}	0.66
		Cesium-136	0.0002	0.027	1.98×10^{6}	3.05×10^{4}
		Cesium-137	42.00	5,958	5.19×10^{8}	2.51×10^{6}
		Total		13,966	8.38×10^{8}	5.76×10^{6}
Fuel in storage at the end of 2020[a]	1/2021	Cesium-133 (stable)	49.6	172,900	-	-
		Cesium-134	0.5	1,795	2.32×10^{9}	2.36×10^{7}
		Cesium-135	13.8	48,980	5.64×10^{4}	19
		Cesium-136	0.00004	0.15	1.08×10^{7}	1.66×10^{5}
		Cesium-137	36.1	129,700	1.13×10^{10}	5.46×10^{7}
		Total		353,375	1.36×10^{10}	7.84×10^{7}

(a) Assumes no interim processing.

353 DUPLICATES MATERIAL

Department of Energy
Washington, D.C. 20545

OCT 07 1983

Mr. Steven Baggett
U.S. Nuclear Regulatory Commission
Washington, D.C. 20555

Dear Mr. Baggett:

This is in reference to your meeting with Thomas Anderson of my staff on October 6, 1983, regarding Nuclear Regulatory Commission (NRC) registry of cesium-137 capsules produced by the Department of Energy at the Hanford Reservation Waste Encapsulation and Storage Facility (WESF). We request that evaluation of the generic capsule for registry be undertaken by your office.

As discussed at the October 6 meeting, these capsules are of the same generic design, which is designated as the Model A WESF capsule (certification package enclosed). Also, two copies of the detailed information regarding registry of this capsule were provided at the meeting and this information should be used as the basis for the evaluation. Please contact Tom Anderson, 353-5560, if you have any questions or require further information regarding registry of the Model A WESF capsule.

Your expeditious response will be appreciated.

Sincerely,

John J. Jicha, Jr.

John J. Jicha, Jr., Director
R&D and Byproducts Division
Office of Defense Waste
and Byproducts Management

Enclosure

TRIP / CONFERENCE REPORT

Report Issue Date: 2/27/84

DESTINATION OR CONFERENCE PLACE AND DATE

Name	Location	Date
ent of Energy, Headquarters	Germantown, MD	2/22/84
Regulatory Commission, Headquarte	Silver Springs, MD	2/23/84

PARTICIPANTS (Indicate Part-Time By *)

NAME	TITLE	ORGANIZATION	SIGNATURE (Conferences Only)	☐
n J. Jicha, Jr.		DOE-HQ		☐
H. (Bill) McMuller		DOE-ALOO		☐
E. (Gene) Reep		Rockwell		☐
C. (Bill) Remini		DOE-HQ		☐
d J. Schultz		ORNL		☐
th L. Tingey		PNL		☐
ard Wilmont		SNLA		☐
				☐
				☐

DOE-HQ on 2/22/84: Review material on evaluations on integrity of cesium capsules and prepare briefing.
NRC-HQ on 2/23/84: NRC briefing.

ry Of Results (Significant Agreements, Decisions, Commitments, Accomplishments)

Department of Energy, Headquarters (DOE-HQ) has assembled a group of knowledgeable resentatives from the various DOE sites to facilitate compilation and review of completed ongoing studies relating to the integrity of WESF cesium capsules for use in irradiators first meeting was held on February 6, 1984, at DOE-HQ to review several issues relating the integrity of WESF cesium capsules to be used in irradiators and to assign actions participants. A second meeting (reported herein) was held on February 22, 1984, at -HQ to review information and data (published documents) and prepare an informal presenta give Nuclear Regulatory Commission (NRC) staff members: a background and overview ormation relating to the CsCl form and containment materials selection process, WESF irradiator operation experience, and work on compatibility and integrity.

achment 1 is a list of published (cleared) "References on WESF Cesium Capsules," prepared ntly by PNL and Rockwell for DOE-HQ staff. Attachment 2 is the presentation used to ef the NRC Nuclear Materials Safety Section (NMSS) staff. The briefing was well received the NRC staff (with several exceptions) and they seemed willing to proceed with the istration process and would be willing to consider licensing of the WESF capsule as aled source except for a question on the effects of thermal cycling of capsules in irradiator.

(If Continuation Form Is Used For Report Details)

Signature of Person Preparing Report: L. E. Reep

OFFICIAL CONFIRMATION OF CONFERENCE REPORT OR APPROVAL OF TRIP REPORT

K. A. Gasper — Title: Program Manager, Waste Fractionization & Encapsulation — Date: 2/27/8

Distribution (Enter Name Of Individual):

H. Bryan, PNL
C. Fulton
A. Gasper
W. Gibson
L. Hibbard
W. Higbee
T. Karagianes DOE-RL
J. M. Latkovich, PNL
J. L. McElroy, PNL
H. E. McGuire
J. W. Patterson
*I. E. Reep
J. H. Roecker
R. L. Salley
J. P. Sloughter
*G. L. Tingey, PNL
T. B. Veneziano
J. K. Wilson, DOE-RL
D. D. Wodrich
*R. D. Wojtasek

Page 1 of

de copy of backup information presented to NRC

A-6400-078.1

Participants at the February 23, 1984, meeting with the NRC (in addition to those attending the February 22, 1984 meeting) were:

Richard E. Cunningham, Director NRC-NMSS

Bernard Singer, Chief, Certification and Processing, NRC-NMSS

Tom Clark, NRC-NMSS

J. M. Brown, Jr., NRC-NMSS

L. C. Rouse, NRC-NMSS

Peter Loysen, NRC-NMSS

Steven Baggett, NRC-NMSS

Charles MacDonald, NRC-NMSS

Everett Wick, NRC-NMSS

Michael Tokar, NRC-NMSS

John C. Darrin, Vice President, Duratek Corporation

MEETING OF FEBRUARY 22, 1984 AT DOE-HQ

- This was a working meeting chaired by John Jicha, DOE-HQ, for the purpose of addressing several known issues (questions) raised by the NRC in their review and certification process for use of WESF cesium capsules in irradiators. Based on recent conversations they (DOE-HQ) have had with NRC staff members (mainly Bernie Singer), they believed that the NRC staff needed additional background information and data to assist them in their review of the application for "Registry of Radioactive Sealed Sources and Devices."

- A proposed outline of the briefing was reviewed and revised (Attachment 2). It was felt that the NRC needed to know more about the relationship of cesium encapsulation to waste management at Hanford (and Savannah River Plant's proposed cesium recovery)

background on the CsCl form selection process performed by PNL in the late 1960's nd early 1970's.

s a note, the DOE has requested ORNL to issue a letter to potential users of irradiation ources, requesting an expression of interest in ^{137}Cs source material.

ING OF FEBRUARY 23, 1984 AT NRC-HQ

verall, the briefing to NRC-NMSS staff went well. However, several concerns surfaced ime after time during the briefing. These are:

THERMAL CYCLING. This question came as a surprise to the DOE and their contractors. The question relates to the thermal cycling (shock) anticipated for source plaques used in "wet storage" irradiators where the plaques are cycled from dry air to water several times per operating day, and the postulated potential for capsule failure due to metal fatigue over many years (~30) of operation. Since NRC staff brought his question up time after time, it was decided (by DOE-HQ) that tests should be conducted to evaluate the effect of thermal cycling on the integrity of cesium capsule So as not to hold up the application for registry, it is highly desirable to complete preliminary thermal cycling tests as soon as possible. John Jicha (DOE-HQ) requested Garth Tingey (PNL) to prepare a plan for performing the thermal cycling tests and evaluation.

SOLUBILITY OF CESIUM CHLORIDE. At first, this seemed to be a major concern expressed by several NRC staff members. They (Bernie Singer, NRC) related a "true" story about a two curie cesium source used for well logging that became lodged in the loggi device and could not be removed from its holder. To dislodge it, the holder with source was placed in a lathe to remove the holder. The lathe cutting tool cut too

deep, releasing radiocesium. The cesium source material was contained on an alumino-silicate (relatively insoluble, compared to CsCl) resin matrix. It cost $2,000,000 to clean up the resulting spread of cesium contamination from release of a small fraction of the source. It was pointed out (by Tingey and Reep) that a more soluble form, such as CsCl, would be much easier to clean up. It was also noted that CsCl was encapsulated in relatively thick double-walled capsules from which any leakage would be highly improbable. At this juncture, a consultant (John Darrin of Duratek Corporation) of the NRC was invited to briefly discuss encapsulation of cesium (15 to 20 wt. percent) in a borosilicate glass matrix developed at Catholic University (by Pete Mercedo in support of the high-level waste form alternatives assessment funded by SRL, lead site). At this point, Dick Cunningham, director NRC-NMSS made it clear that the purpose of the meeting was to evaluate the existing CsCl form used in WESF capsules and not to re-encapsulate in a new form. New forms may be developed in the future, if feasible and required.

EXPANSION AND CONTRACTION OF CsCl AT THE SOLID-SOLID PHASE TRANSFORMATION. Some concern of the effects of expansion and contraction of CsCl during temperature excursions through the solid-solid phase transformation (at ~350° C for impure CsCl and ~470° C for pure CsCl) was expressed. It was explained that sufficient void volume would exist to accommodate re-expansion since cesium capsules are filled with the CsCl at 700 to 760° C and allowed to cool in the capsule which results in an increased void volume sufficient to accommodate re-expansion.

itional points discussed were:

Methods for detecting a leaky cesium capsule.

Existing and proposed methods (current upgrades) relating to detection and recovery from a failed capsule in the WESF were discussed.

The initial use of the proposed Transportable Irradiator (TPCI) is planned for the Pacific Northwest for deinfestation of apples and cherries.

The NRC will have completed their decentralization to regional offices by April 2, 1984, after completion of a six-week training course for regional staff members.

The Sandia shipping cask (capable of handling 16 cesium capsules) will be available by January, 1985, if licensing by NRC proceeds according to schedule. Two casks are planned; the first constructed of 304 stainless steel, and a second constructed of A350 carbon steel. (the WESF G-Cell crane upgrade, needed for handling these casks, is scheduled for completion by November, 1984.)

cluding comments by the NRC:

The background information will be very helpful.

The subject matter presented was well planned to address most concerns of the NRC.

The QA/QC aspect of manufacturing WESF cesium capsules seems to be adequate.

The aspects of thermal cycling needs to be evaluated for "wet storage" irradiators before approval of sealed source registration can be made for WESF cesium capsules.

I. E. Reep
Prepared By

A-6400 0 JR 2

- Approval of sealed source registration of WESF cesium capsules for use in "dry storage irradiators can be given by the NRC.
- The data package and application for registration (prepared by DOE-ALOO and SNLA) submitted to the NRC for review was not well prepared. (We agreed.)

ATA ON SrF_2 FOR TELEDYNE RTG.

ill McMullen, DOE-ALOO, asked about the SrF_2 data request recently submitted by Rockwell o DOE-RL for transmittal to DOE-ALOO. I discussed our results with him and gave him an dvanced copy of the requested data (with DOE-RL approval). The data was on its way to lbuquerque, but had not yet arrived. Bill asked about the high isotopic ^{90}Sr from B-Plant ank 6-2 which is currently being processed in B-Plant since strontium capsules produced rom this material will be over 16 percent higher in thermal power than the highest thermal ower capsules currently stored in WESF water basins. Bill would like to know the cost nd impact of loading the SrF_2 from B-Plant Tank 6-2 into capsules without compaction. he reason for this is that later this year we will be shipping 8 Kw worth of strontium ules to ORNL to be hot pressed into high-density capsules for fueling a prototype RTG eing developed by Teledyne. Removing compacted SrF_2 from WESF capsules is a difficult nd time-consuming task which could be eased considerably if the SrF_2 was not compacted nto the capsules. It is estimated that this could increase the number of product capsules rom Tank 6-2 from 55 to 80 or more capsules. Bill McMullen is planning to visit Hanford n March to discuss the request for SrF_2 for ORNL and Teledyne. By then we will have an stimate on cost and schedule impact to WESF operations.

ATTACHMENT 1

G.L. Tingey
I.E. Reep
Feb. 17, 1984

REFERENCES ON WESF CESIUM CAPSULES

Sonie, T. S., and H. T. Fullam. 1968. "Evaluation of Strontium and Cesium Compounds for Waste Packaging." BNWL-CC-1695, Pacific Northwest Laboratory, Richland, Washington 99352.

Includes evaluation of a number of cesium and strontium compounds for encapsulation. The strongest cesium compounds in their order of consideration were CsCl, CsF, CsU_2O_7, and $CsNbO_3$. Physical properties of compounds are given.

Fullam, H. T. 1969. "Compatibility Studies for the Waste Packaging Program, Interim Report," BNWL-CC-2111, Pacific Northwest Laboratory, Richland, Washington 99352.

Van Tuyl, H. H., et al. 1969. "Interim Report on Low Cost Cesium Radiation Sources from Hanford Waste Management Programs," BNWL-CC-2245, Pacific Northwest Laboratory, Richland, Washington 99352.

Fullam, H. T. 1970. "Compatibility Studies for the Waste Packaging Program Preliminary Research," BNWL-B-7, Pacific Northwest Laboratory, Richland, Washington 99352.

Fullam, H. T. 1971. "Physical Property Measurements of Cesium Chloride and Cesium Chloride-Alkali Metal Chloride Systems," BNWL-B-74, Pacific Northwest Laboratory, Richland, Washington 99352.

Includes data on melting point, phase transition, and thermal expansion of CsU, CsU-KCl, CsCl-NaCl, and CsCl-KCl-NaCl systems. Also includes compaction, moisture adsorption rates and a review of capsule design considerations.

Fullam, H. T., and L. A. Bray. 1971. "Cesium Chloride Flow Sheet Development Studies for Waste Packaging Program," BNWL-B-142, Pacific Northwest Laboratory, Richland, Washington 99352.

Fullam, H. T. 1972. "Compatibility of Cesium Chloride and Strontium Fluoride with Containment Materials," BNWL-1673, Pacific Northwest Laboratory, Richland, Washington 99352.

Mudge, L. K. 1972. "Development of the Melt Cast Process for CsCl Encapsulation," BNWL-1214, Pacific Northwest Laboratory, Richland, Washington 99352.

Larson, D. E., T. W. Crawford, and S. M. Joyce. 1981. "Strontium and Cesium Radionuclide Leak Detection Alternatives in a Capsule Storage Pool," PNL-3844, Pacific Northwest Laboratory, Richland, Washington 99352.

Includes an assessment of various methods to detect leaks in both strontium and cesium capsules. The methods assessed are gamma scan, wet sipping,* and conductance, specific-ion electrode, visual, ultrasonic, and eddy current (*most promising). Includes a description of the capsule storage system.

Fullam, H. T. 1982. "Cesium Chloride Compatibility Testing Program, Annual Report FY 1982, PNL-4556, Pacific Northwest Laboratory, Richland, Washington 99352.

Includes testing criteria and procedure, capsule fabrication, aging, sectioning and examinaion, heat transfer and aging studies, chemical analysis of WESF-produced CsCl, thermodynamic analysis of the 316L stainless steel-WESF Cesium Chloride system, and physical property measurements.

Bryan, G. H. 1983. "Cesium Chloride Compatibility Testing Program Annual Report FY 1983," PNL-4847, Pacific Northwest Laboratory, Richland, Washington 99352.

Includes metallography data of capsules aged 0, 2208, and 4392 hours at 450 C and estimated corrosion rates.

Fullam, H. T. "The Effects of KCl and NaCl Additions on Certain Properties of CsCl," BNWL-SA-4117, Pacific Northwest Laboratory, Richland, Washington 99352.

Crowe, J. C. "Techniques for Nondestructive Evaluation of Radicactive Waste Capsule End Cap Welds," BNWL-SA-3758, Battelle-Northwest, Richland, Washington 99352.

Includes ultrasonic and acoustic methods.

Rimshaw, S. J., and E. E. Ketchen. 1967. "Cesium-137 Data Sheets," ORNL-4186, Oak Ridge National Laboratory, Oak Ridge, Tennessee.

Includes composition of fuel form radiation data, thermophysical, mechanical and chemical properties, biological tolerances, and shielding data.

Niemeyer, R. G. 1968. "Cesium-137 Chloride Source Safety Development," ORNL 68-10-54, Oak Ridge National Laboratory, Oak Ridge, Tennessee.

Includes phase diagram of the $CsCl-BaCl_2$ system, compatibility of CsCl with containment materials, and thermal expansion data.

Larson, D. E., T. W. Crawford, and S. M. Joyce. 1981. "Strontium and Cesium Radionuclide Leak Detection Alternatives in a Capsule Storage Pool," PNL-3844, Pacific Northwest Laboratory, Richland, Washington 99352.

Includes an assessment of various methods to detect leaks in both strontium and cesium capsules. The methods assessed are gamma scan, wet sipping,* and conductance, specific-ion electrode, visual, ultrasonic, and eddy current (*most promising). Includes a description of the capsule storage system.

Fullam, H. T. 1982. "Cesium Chloride Compatibility Testing Program, Annual Report FY 1982, PNL-4556, Pacific Northwest Laboratory, Richland, Washington 99352.

Includes testing criteria and procedure, capsule fabrication, aging, sectioning and examinaion, heat transfer and aging studies, chemical analysis of WESF-produced CsCl, thermodynamic analysis of the 316L stainless steel-WESF Cesium Chloride system, and physical property measurements.

Bryan, G. H. 1983. "Cesium Chloride Compatibility Testing Program Annual Report FY 1983," PNL-4847, Pacific Northwest Laboratory, Richland, Washington 99352.

Includes metallography data of capsules aged 0, 2208, and 4392 hours at 450 C and estimated corrosion rates.

Fullam, H. T. "The Effects of KCl and NaCl Additions on Certain Properties of CsCl," BNWL-SA-4117, Pacific Northwest Laboratory, Richland, Washington 99352.

Crowe, J. C. "Techniques for Nondestructive Evaluation of Radioactive Waste Capsule End Cap Welds," BNWL-SA-3758, Battelle-Northwest, Richland, Washington 99352.

Includes ultrasonic and acoustic methods.

Rimshaw, S. J., and E. E. Ketchen. 1967. "Cesium-137 Data Sheets," ORNL-4186, Oak Ridge National Laboratory, Oak Ridge, Tennessee.

Includes composition of fuel form radiation data, thermophysical, mechanical and chemical properties, biological tolerances, and shielding data.

Niemeyer, R. G. 1968. "Cesium-137 Chloride Source Safety Development," ORNL 68-10-54, Oak Ridge National Laboratory, Oak Ridge, Tennessee.

Includes phase diagram of the $CsCl-BaCl_2$ system, compatibility of CsCl with containment materials, and thermal expansion data.

I.E. Reep
Feb. 17, 1984

REFERENCES ON WESF CESIUM CAPSULES

Sonie, T. S., and H. T. Fullam. 1968. "Evaluation of Strontium and Cesium Compounds for Waste Packaging." BNWL-CC-1695, Pacific Northwest Laboratory, Richland, Washington 99352.

Includes evaluation of a number of cesium and strontium compounds for encapsulation. The strongest cesium compounds in their order of consideration were CsCl, CsF, CsU_2O_7, and $CsNbO_3$. Physical properties of compounds are given.

Fullam, H. T. 1969. "Compatibility Studies for the Waste Packaging Program, Interim Report," BNWL-CC-2111, Pacific Northwest Laboratory, Richland, Washington 99352.

Van Tuyl, H. H., et al. 1969. "Interim Report on Low Cost Cesium Radiation Sources from Hanford Waste Management Programs," BNWL-CC-2245, Pacific Northwest Laboratory, Richland, Washington 99352.

Fullam, H. T. 1970. "Compatibility Studies for the Waste Packaging Program Preliminary Research," BNWL-B-7, Pacific Northwest Laboratory, Richland, Washington 99352.

Fullam, H. T. 1971. "Physical Property Measurements of Cesium Chloride and Cesium Chloride-Alkali Metal Chloride Systems," BNWL-B-74, Pacific Northwest Laboratory, Richland, Washington 99352.

Includes data on melting point, phase transition, and thermal expansion of CsU, CsU-KCl, CsCl-NaCl, and CsCl-KCl-NaCl systems. Also includes compaction, moisture adsorption rates and a review of capsule design considerations.

Fullam, H. T., and L. A. Bray. 1971. "Cesium Chloride Flow Sheet Development Studies for Waste Packaging Program," BNWL-B-142, Pacific Northwest Laboratory, Richland, Washington 99352.

Fullam, H. T. 1972. "Compatibility of Cesium Chloride and Strontium Fluoride with Containment Materials," BNWL-1673, Pacific Northwest Laboratory, Richland, Washington 99352.

Mudge, L. K. 1972. "Development of the Melt Cast Process for CsCl Encapsulation," BNWL-B-214, Pacific Northwest Laboratory, Richland, Washington 99352.

86

Lamb, E. 1980. "Cesium-137 Source Materia' for Irradiator," CONF-800964-1, Oak Ridge National Laboratory, Oak Ridge, Tennessee.

Includes evaluation of cesium-137 capsules as sludge irradiators with characteristics, availability, and safety considered.

"Tilt-Pour Melt-Caster for Encapsulation of Radioactive Cesium." 1977. ARH-SA-298, Atomics International Div., Richland, Washington 99352.

Watrous, R. A., and D. D. Chen. 1978. "Disposal of Strontium and Cesium Capsules in Geologic Media: An Analysis of Technical Feasibility." RHO-LD-51, Atomics International Div., Richland, Washington 99352.

Braden, D. E., et al. 1971. "Safety Analysis Report Waste Encapsulation and Storage Facilities," ARH-1986, Atlantic Richfield Hanford Co., Richland, Washington 99352.

O'Brien, W. H. 1974. "Welding Development for the Waste Encapsulation Program, Final Report, ARH-3043, " Atlantic Richfield Hanford Co., Richland, Washington 99352.

Hammond, J. E. 1975. "Cesium Chloride Capsule Testing for Special Form Qualification," ARH-CD-440, Atlantic Richfield Hanford Co., Richland, Washington 99352.

Includes results from tests on CsCl capsules including heating to 800 C, dropping from 10 m height, and dropping a 3- to 4-lb steel rod onto the capsules. Capsules withstood all tests without rupture.

Kaser, J. D. 1979. "Thermal Analysis of Hanford Defense Waste Strontium and Cesium Capsules Isolated in Basalt," RHO-LD-78, Rockwell International, Rockwell Hanford Operations, Richland, Washington 99352.

Includes calculations of capsule and surrounding rock temperatures versus time for deep basalt storage.

Campbell, G. D. 1981. "Strontium and Cesium Capsule Heat Transfer Analysis," RHO-LD-167, Rev. 1, Rockwell International, Rockwell Hanford Operations, Richland, Washington 99352.

Includes the temperature distributions based on calculations for capsules in air, water, or basalt formation. Appendix includes data on the emissivity of stainless steel both in the shiny and tarnished states and includes absorbed dose calculations for cesium-137 capsules.

Geier, R. G. 1981. "Criteria for ^{137}Cs and ^{90}Sr Capsules," RHO-CD-1049 and RHO-CD-1049 Appendix, Rockwell International, Rockwell Hanford Operations, Richland, Washington 99352.

Ramble, A. L. 1981. "Waste Capsule Weld Evaluation," RHO-CD-1514, Rockwell International, Rockwell Hanford Operations, Richland, Washington 99352.

Kenna, B. T., and F. J. Schultz. 1983. "Characterization of an Aged WESF Capsule," SAND 83-0928, Sandia National Laboratories, Albuquerque, New Mexico 87185.

Includes gas analysis, tensile properties of metal, analysis of CsCl, isotopes analysis, and metallography.

Sutherland, S. H., R. G. Eakes and S. N. Kempka. 1983. "SSITS Cask - A Capsule Transportation System, SAND-82-1992C, Sandia National Laboratories, Albuquerque, New Mexico 87185.

Achener, P. Y., et al. 1968. "Thermophysical and Heat Transfer Properties of Alkali Metals," AGN-8195, Vol. 1, pp 203-241.

Includes detailed density data on cesium.

Finston, H. L., and M. T. Kinsley. 1961. "The Radiochemistry of Cesium," NAS-NS-3035, Prepared for National Academy of Sciences, National Research Council, Nuclear Science Series by Brookhaven National Laboratory, Upton, New York.

Includes preparation procedures, properties, counting techniques for isotopes and applications for cesium and cesium compounds.

Barin, I., and O. Knacke. 1973. "Thermochemical Properties of Inorganic Substances," Pub. by Heidelberg, New York, New York.

Includes thermodynamic properties as a function of temperature and state.

Jackson, R. R. 1976. "Hanford Waste Encapsulation: Strontium and Cesium," Nuclear Technology 32:10-15.

Includes a description of encapsulation processes and corrosion data of both CsCl and SrF_2.

Yagub'yau, E. S. and G. A. Bukhalova. 1968. "Densities and Molar Volumes of Melts of Alkali Metal and Barium Chlorides," Russian J. Inorg. Chem. 13:1162-1163.

Includes densities of $BaCl_2$ - CsCl mixtures.

Grjotheim, K. et al. 1971. "The Solution of Alkaline Earth Metals in their Molten Halides. III. The Densities of Melts in the Systems Barium - Barium Chloride, Barium - Barium Bromide and Strontium - Strontium Chloride." Acta. Chemica. Scandinavia, 25:3415-3420.

Includes densities of Ba-BaU_2 and CsCl-$BaCl_2$ mixtures.

Turkdogan, E. T. 1980. "Physical Chemistry of High Temperature Technology." Academic Press, New York, New York.

Includes density of solid and liquid metals at their melting point.

Janz, G. J., et al. 1968. "Molten Salts: Volume 1, Electrical Conductance, Density, and Viscosity Data," NSRDS-DBS 15, National Standard Reference Data Series - National Bureau of Standards 15, U.S. Government Printing Office, Washington, D.C. 20402.

Includes detailed density data on molten salts.

Peake, J. S., and M. R. Bothwell. 1954. "The Densities and Molal Volumes of Molten Mixtures of Potassium Chloride and Barium Chloride," J. Am. Chem. Soc., 76:2653-2655.

Yaffe, I. S., and E. R. Van Artsdalen, "Electrical Conductance and Density of Pure Molten Alkali Halides." J. Phys. Chem., 60:1125-1131.

Includes data on density of molten CsCl.

Dillon, I. G., et al. 1972. "Determination of Densities of Alkali Metals by a Gamma Radiation Attenuation Technique." ORO-3604-8, Tuskegee Inst., Tuskegee, Alabama.

Includes detailed density data on cesium.

Huber, R. W., E. V. Potter, and H. W. St. Clair. 1952. "Electrical Conductivity and Density of Fused Binary Mixtures of Magnesium Chloride and Other Chlorides." RI-4858, Bureau of Mines.

Includes the density of BaU_2 at 800, 900, and 1000 C.

Hiemstra, S., D. Prins, G. Gabrielse, and J. B. Van Zytueld. 1977. "Densities of Liquid Metals: Calcium, Strontium, Barium," Phys., Chem. Liq., 6:271-279.

Includes dentisty data on barium.

cask for handling large quantities of byproducts, it is reasonable to assume that this cask could be used for shipments to industry and for return of sources to DOE for ultimate disposal. Costs of cask rental, handling at DOE facilities (WESF) and shipping should be borne directly by the user or reimbursed to DOE. Another responsibility assumed de facto by DOE under a lease or loan arrangement is assistance with accidents involving the sources. The probability of occurrence of accidents cannot be assessed but can be minimized through periodic inspections and analyses of the sources.

The major advantage accruing to the user under a lease or loan arrangement is the resolution of the issue of ultimate disposal. The user must, however, comply with all regulatory requirements for use of the sources or be subject to immediate recall and return of sources to DOE (as required by the law). The other major responsibility assumed by the user is to comply with the payment and all other conditions of the specific lease or loan agreement developed with DOE.

The issues of how isotope use costs are determined and by whom as well as the basis for these costs are significant. Typically, source intensities are analyzed by calorimetry at the time of manufacture which may be many years prior to use. In these cases, sources could be reanalyzed by calorimetry prior to shipment or a calculated intensity could be determined based upon initial loading and subsequent radioactive decay. A more cumbersome method of determining source intensity would be to measure the radiation flux field emitted by the sources prior to shipment. For large shipments, this would be prohibitively time consuming but may be demanded by users on randomly selected source capsules as a verification of the calorimetric data. Whatever method is chosen for source strength determination must be acceptable to users without recourse.

Current costs for cesium from the Oak Ridge Sales Pool are based on the total number of curies as determined by calorimetry. However, particularly with the current design of the WESF capsules, this basis is unattractive because of the self-shielding of the cesium chloride. WESF capsules have a gamma production efficiency of approximately 69%; that is only 69% of the total curies within the capsules are emitted beyond the external surfaces. In addition, in the case of a lease or loan where sources are returned to DOE, capsules used for moderate periods of time will still be radioactively useful upon return because of the 30 year half-life of cesium 137. This remaining activity constitutes a salvage value and these sources could again be sold by DOE to another user. Capsule costs could be based on the number of Curies 'used up' due to radioactive decay during the period of commercial use. For cesium, this amounts to about 2%/year of the Curies available at the beginning of each year. In this case, an additional rental fee for the Curies used but not lost to decay could be appropriate. Regardless of the cost basis, it is reasonable for DOE to charge more for capsule use on a lease or loan basis rather than an outright sale basis because of the additional responsibilities assumed by DOE.

With regard to a lease or loan, the specific terms and conditions must be established. Payments from users for the total amount due (based on total Curies and the cost basis) could be due prior to or upon delivery. Payments could be made periodically over several years with or without interest charges. Upon return, the salvage value could be paid by DOE to the user or it could be included in the initial cost basis if the term of the lease or loan were defined explicitly.

Another major issue is the selection of a DOE entity to assume the rights and responsibilities of leasing or loaning cesium 137 sources to industry. This entity must be able to develop specific lease or loan agreements with potential users, must establish Curie loadings of sources for lease or loan fee

OFFICIAL USE ONLY

rputations.
imbursement
ar, assure
rements
dic rep
r the per
idents a
arces.

To
commendati
by
rces prod

1.

2.

3.

4.

5.

6.

7.

ive lease or loan payments and shipping and handling
rs, must conduct inspections of user facilities or, at
ces are being handled safely in compliance with license
e terms of lease or loan agreements, must arrange for
ces to DOE for destructive analysis, must be available
lease or loan agreements to assist users in the case of
ge for the return and re-lease or ultimate disposal of

er to more fully encourage commercial use of cesium 137
Defense Programs, the following are recommended:

velop a standard lease agreement for users outlining
ecific rights and responsibilities.
otiate leases with users for specific periods of time
referably 10 years).
tablish and publish in the Federal Register, a price for
sium 137 of 15¢/Curie based on the effective percentage
f gammas emitted by the specific source geometry as
etermined by calorimetry(total Curies) and a sample flux
ield measurement(gamma efficiency). For WESF capsules, the
gamma efficiency is 69%.
llow lease costs to be paid in total upon delivery or in
ual installments without interest over a five year
eriod.
isregard salvage value of cesium as potentially owed to
sers upon return to DOE.
esignate Richland Operations Office as the DOE entity to
assume all rights and responsibilities with regard to
esium lease or loan arrangements with users.
irect Richland Operations Office to establish mechanisms
nd procedures to develop lease agreements, to determine
ource costs, to inspect user facilities, to accept and
nalyze returned samples of sources and to accept returned
ources for ultimate disposal.

OFFICIAL USE ONLY

6

Rockwell Hanford Operations
Energy Systems Group
P.O. Box 800
Richland, WA 99352

Rockwell International

In reply, refer to letter 25920.R1

JAN 24 1985

Mr. Allan Chin, President
Radiation Sterilizers, Inc.
3000 Sand Hill Road, #4-245
Menlo Park, California 94025

Dear Allan:

ADDITIONAL WASTE ENCAPSULATION AND STORAGE FACILITY (WESF) CAPSULE HANDLING INFORMATION

Reference: Letter dated November 5, 1984, Allan Chin to K. A. Gasper

Enclosed is the information which you requested. The information is presented and attached in the same order as requested in the referenced letter attachment sent to M. Dayani, Department of Energy-Richland Operations Office.

1. DRAWING OF THE POOL CELL CAPSULE TONGS, RHO-RE-DD-1.

2. DECONTAMINATION PROCEDURES FOR CAPSULE AND CASK.

   - JPA EO-906-003, Capsule Transfer and Storage
   - SOP EO-140-006, GE-1500 Cask Unloading Operation

3. CASK LOADING PROCEDURES.

   - SOP EO-140-010, GE-1500 Cask Operation

4. DRAWINGS AND MARKET SURVEY OF IN-LINE BETA MONITOR.

   - H-2-63120 (sheets 1 & 2), Contact Alpha Beta Cell Assembly Details
   - SD-WM-CDR-002, Conceptual Design Report 225-B Storage Basin Pool Cell Liquid Effluent Radiation Detectors

5. FAILED CAPSULE LOCATOR.

   - H-2-91286, Leak Detector Assembly
   - H-2-91287, Leak Detector Housing Assembly
   - H-2-91288, Leak Detector Staff Assembly
   - Supporting cart drawings are not available at this writing.
   - Operating Procedures are in the development stages.

6. POOL CELL CLEANUP PROCEDURES.

   - SOP EO-001-006, Storage Pool Emergency Procedure
   - A new system is currently being placed into the facility for handling contaminated pool cell water. Attached is the Acceptance Test Procedure (ATP) [illegible] and drawings H-2-93127 (sheets 1 [illegible]

Rockwell International

7. DISPOSAL PROCEDURES FOR LEAKY SOURCES.

- No specific procedures exist for disposal. Capsules are passed into our operating cells and reprocessed.

8. PROCEDURES, INSTRUMENTS FOR CONTAMINATION DETECTION OF CASK SURFACES AND RELEASE OF CASK FOR SHIPMENT OUT OF WESF.

The following Radiation Work Procedures describe various aspects of receiving, surveying, releasing, and shipping casks at WESF:

- RHO-MA-172 GEN-0, RWP B-10, RWP B-11, RWP B-14, RWP B-15, RWP B-16, RWP TUM-11, RWP TUM-12, and RWP TUM-13.

9. CAPSULE SURFACE AND INTERFACE TEMPERATURES.

- PNL-5170, July 1984, G. L. Tingey, E. J. Wheelwright, J. M. Lytle, "A Review of Safety Issues that Pertain to the Use of WESF Cesium Chloride Capsules in an Irradiator." This report is available from the Technical Information Center at Oak Ridge and is not attached.

10. TRUCKING REQUIREMENTS AND SPECIFICATIONS FOR SHIPMENT.

Relevant Department of Transportation (DOT) regulations are contained in the Code of Federal Regulations Hazardous Materials Regulations, CFR 49, parts 171, 172, 173, 177, and 178; attached is a copy of 177.825, which is directed at highway route control quantity.

11. APPROVED TRUCKING COMPANIES

Any carrier that has the authority to handle radioactive material and meets all the DOT regulations could be considered for handling highway route control quantity. The following is a list of a few carriers of radioactive material:

- Tri-State Motor Transit Company, P.O. Box 113, Joplin, Missouri 54801, (417) 624-3131

- A. J. Metler Hauling & Rigging, Incorporated, P.O. Box 3507, Knoxville, Tennessee 37917

- CF Arrowhead Services, Incorporated, 175 Linfield Drive, Menlo Park, California 94025, (415) 326-1700

- Home Transportation Company, Incorporated, 1425 Franklin Road, Marietta, Georgia 30062, (404) 427-4231

- E. L. Murphy Trucking Company, 2323 Terminal Road, St. Paul, Minnesota 55113 (800) 227-0919

Rockwell International

12. OTHER TRANSPORTATION INFORMATION

Attached is a copy of the 1985 schedule for Radioactive Material Transportation Workshops, conducted by Science Applications International Corporation for the U.S. Department of Energy.

I hope that the attached information meets your needs. Please be aware that neither Rockwell nor the Department of Energy provides any guarantee that these procedures and components will operate properly in your facilities. If you have any questions, please call me on (509) 373-1872.

Very truly yours,

K. A. Gasper

K. A. Gasper, Program Manager
Waste Fractionization and Encapsulation

KAG/DLL/elr

Attachments

cc: M. Dayani, DOE-RL wo/att.
G. L. Tingey, PNL wo/att.

END

DATE FILMED

03 / 18 / 91