Nebraska Public Power District
Nebraska's Energy Leader

NLS2000118
December 20, 2000

Ellis W. Merschoff
Regional Administrator, Region IV
U. S. Nuclear Regulatory Commission
611 Ryan Plaza Drive, Suite 400
Arlington, Texas 76011-8064

Dear Mr. Merschoff:

Subject: Post Examination Comments

Senior Reactor Operator and Reactor Operator initial licensing examinations were administered at Cooper Nuclear Station (CNS) December 15, 2000. Per NUREG-1021 Revision 8, a post examination analysis was performed by CNS and five comments on the examination are enclosed for your consideration. Feedback from the applicants is included in these comments.

Should you have any questions or require additional information, please contact Mr. Dave Cook, Nuclear Training Manager, at (402) 825-5416.

Respectfully,

John H. Swailes
Vice President of Nuclear Energy

/nr
Enclosures

cc: T. O. McKernon w/enclosures
Chief Examiner
USNRC - Region IV

Cooper Nuclear Station
P.O. Box 98 / Brownville, NE 68321-0098
Telephone: *(402) 825-3811 /* ***Fax:*** *(402) 825-5211*
http://www.nppd.com

Exam Question: 29 (SRO & RO)

An automatic reactor scram has occurred. All control rods were full out prior to the scram. The plant conditions are as follows:

All scram valves opened
117 rods NOT fully inserted
Reactor power = 12%
Scram pilot valve air header pressure = 0 psig
SDV is full

WHICH ONE (1) of the following alternate control rod insertion methods is most likely to insert control rods?

A. Use the individual scram test switches.

B. De-energize the scram solenoids

C. Reset scram, drain the SDV, and manually scram the reactor.

D. Initiate the ARI System.

Exam Answer:

C. Reset scram, drain the SDV, and manually scram the reactor.

Question/Answer Problem Statement:

The "methods" listed would be accomplished per ESP 5.8.3, "Alternate Control Rod Insertion Methods." The "Individual Scram Test Switch" method would be accomplished using leg "D" of Attachment 1. This method drains the Scram Discharge Volume and resets the scram, then individually scrams the rods. This method of control rod insertion would create the maximum differential pressure across a CRDM, providing the "most likely" method to insert any given control rod. The question did not evaluate which success path should be used at this time, but asked which method would work to insert control rods. Choice "C" would be most likely for ALL control rods and choice "A" would be most likely for any given control rod.

Reference:

ESP 5.8.3, Attachment 1, "Alternate Rod Insertion Methods Flowchart."

Recommended Resolution:

Also accept "A" or change correct choice to "A".

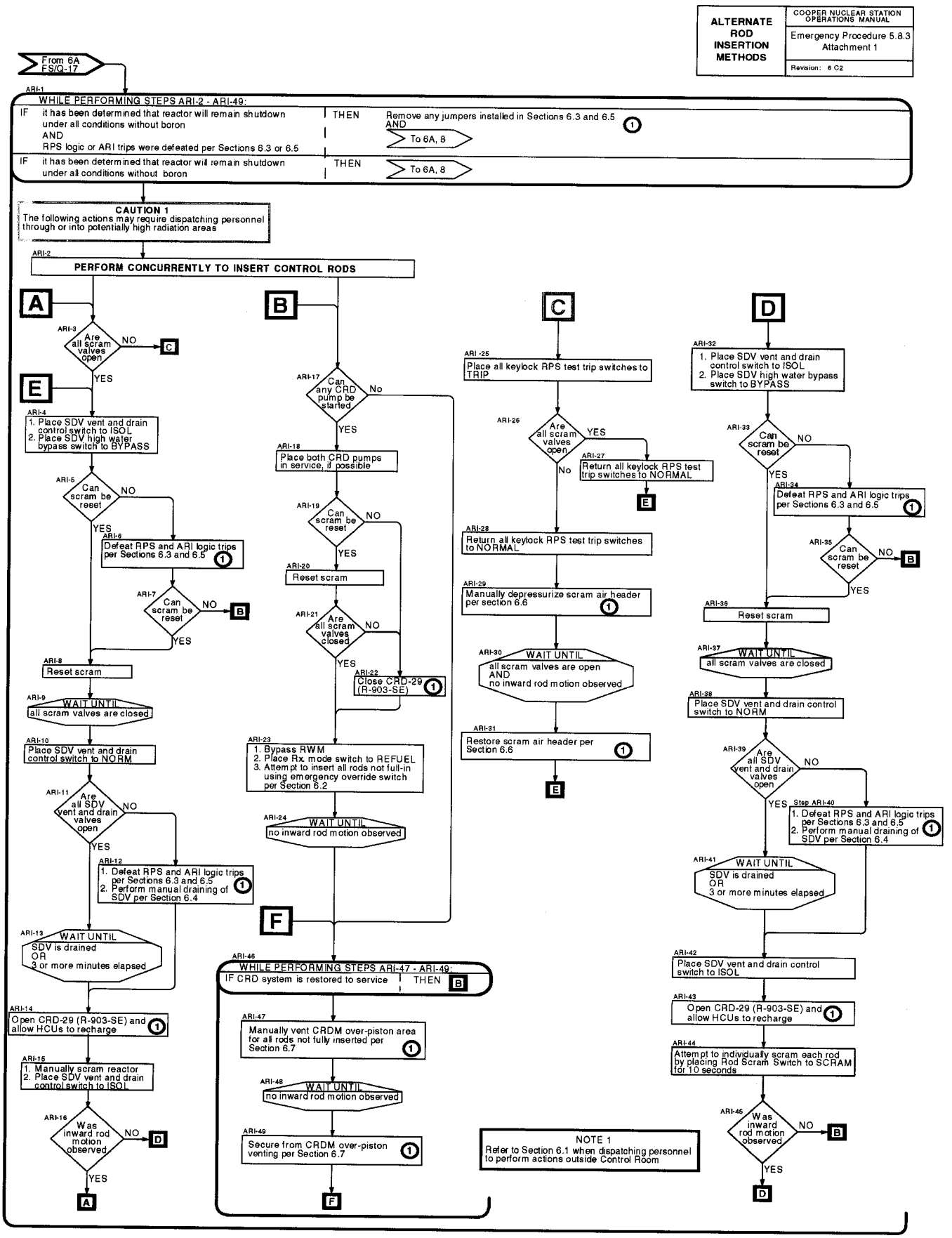
ALTERNATE ROD INSERTION METHODS
COOPER NUCLEAR STATION OPERATIONS MANUAL
Emergency Procedure 5.8.3 Attachment 1
Revision: 6 C2
From 6A FS/Q-17
ARI-1
WHILE PERFORMING STEPS ARI-2 - ARI-49:
IF it has been determined that reactor will remain shutdown under all conditions without boron AND RPS logic or ARI trips were defeated per Sections 6.3 or 6.5
THEN Remove any jumpers installed in Sections 6.3 and 6.5 AND To 6A, 8
IF it has been determined that reactor will remain shutdown under all conditions without boron
THEN To 6A, 8
CAUTION 1
The following actions may require dispatching personnel through or into potentially high radiation areas
ARI-2
PERFORM CONCURRENTLY TO INSERT CONTROL RODS
A
ARI-3 Are all scram valves open NO C YES
E
ARI-4 1. Place SDV vent and drain control switch to ISOL 2. Place SDV high water bypass switch to BYPASS
ARI-5 Can scram be reset NO YES
ARI-6 Defeat RPS and ARI logic trips per Sections 6.3 and 6.5 1
ARI-7 Can scram be reset NO B YES
ARI-8 Reset scram
ARI-9 WAIT UNTIL all scram valves are closed
ARI-10 Place SDV vent and drain control switch to NORM
ARI-11 Are all SDV vent and drain valves open NO YES
ARI-12 1. Defeat RPS and ARI logic trips per Sections 6.3 and 6.5 2. Perform manual draining of SDV per Section 6.4 1
ARI-13 WAIT UNTIL SDV is drained OR 3 or more minutes elapsed
ARI-14 Open CRD-29 (R-903-SE) and allow HCUs to recharge 1
ARI-15 1. Manually scram reactor 2. Place SDV vent and drain control switch to ISOL
ARI-16 Was inward rod motion observed NO D YES
A
B
ARI-17 Can any CRD pump be started No YES
ARI-18 Place both CRD pumps in service, if possible
ARI-19 Can scram be reset NO YES
ARI-20 Reset scram
ARI-21 Are all scram valves closed NO YES
ARI-22 Close CRD-29 (R-903-SE) 1
ARI-23 1. Bypass RWM 2. Place Rx. mode switch to REFUEL 3. Attempt to insert all rods not full-in using emergency override switch per Section 6.2
ARI-24 WAIT UNTIL no inward rod motion observed
F
ARI-46 WHILE PERFORMING STEPS ARI-47 - ARI-49:
IF CRD system is restored to service THEN B
ARI-47 Manually vent CRDM over-piston area for all rods not fully inserted per Section 6.7 1
ARI-48 WAIT UNTIL no inward rod motion observed
ARI-49 Secure from CRDM over-piston venting per Section 6.7 1
F
C
ARI-25 Place all keylock RPS test trip switches to TRIP
ARI-26 Are all scram valves open YES No
ARI-27 Return all keylock RPS test trip switches to NORMAL
E
ARI-28 Return all keylock RPS test trip switches to NORMAL
ARI-29 Manually depressurize scram air header per section 6.6 1
ARI-30 WAIT UNTIL all scram valves are open AND no inward rod motion observed
ARI-31 Restore scram air header per Section 6.6 1
E
D
ARI-32 1. Place SDV vent and drain control switch to ISOL 2. Place SDV high water bypass switch to BYPASS
ARI-33 Can scram be reset NO YES
ARI-34 Defeat RPS and ARI logic trips per Sections 6.3 and 6.5 1
ARI-35 Can scram be reset NO B YES
ARI-36 Reset scram
ARI-37 WAIT UNTIL all scram valves are closed
ARI-38 Place SDV vent and drain control switch to NORM
ARI-39 Are all SDV vent and drain valves open NO YES
Step ARI-40 1. Defeat RPS and ARI logic trips per Sections 6.3 and 6.5 2. Perform manual draining of SDV per Section 6.4 1
ARI-41 WAIT UNTIL SDV is drained OR 3 or more minutes elapsed
ARI-42 Place SDV vent and drain control switch to ISOL
ARI-43 Open CRD-29 (R-903-SE) and allow HCUs to recharge 1
ARI-44 Attempt to individually scram each rod by placing Rod Scram Switch to SCRAM for 10 seconds
ARI-45 Was inward rod motion observed NO B YES
D
NOTE 1
Refer to Section 6.1 when dispatching personnel to perform actions outside Control Room

Exam Question: 74 (SRO & RO)

The plant is operating at approximately 80% power when the 'A' Narrow Range reactor water level instrument (which was selected for control) fails downscale. Other reactor water level instruments indicate as follows:

'B' Narrow Range	+ 22 inches
'C' Narrow Range	+ 24 inches
'A' Wide Range	+ 15 inches
'B' Wide Range	+ 16 inches

WHICH ONE (1) of the following describes how the Feedwater Control System will control reactor water level under these conditions?

The Feedwater Control System will ...

A. use a default value of + 23 inches to control reactor water level.

B. track and hold activates "FW hold" and a lockout of the feed pump turbines occurs.

C. the flow limit LED on the affected RFPT startup station illuminates in a solid state.

D. use the average of the wide range instrument to control reactor water level.

Exam Answer:

B. track and hold activates "FW hold" and a lockout of the feed pump turbines occurs.

Question/Answer Problem Statement:

Choice "B" is correct if the "A" level transmitter drops rapidly downscale as the RFPs go into "Track and Hold" if selected level transmitter drops below 6 ma or if the rate of change of output is too rapid. However, if the "A" level transmitter lowers at a more moderate rate (slowly), or does not fail below 10 ma (minimum output), the RFPs will respond to the level signal as if it were an actual low level. The speed of both RFPs would increase as soon as the level transmitter output lowered below the Master Controller tape setpoint. As, there would be no response on selected level, the error signal would become larger, resulting a further increase in RFP speed. RFP speed would continue to increase above rated Feedwater Flow (9.56 mlbm/hr) until the "Flow Limit" conditions are met (~ 10 mlbm/hr). When "Flow Limit" conditions occur, the "Flow Limit" LED will illuminate in a solid state. As the rate of change for the failed level transmitter was not specified in the stem, both choice "B" and "C" could be correct depending on the rate of failure assumed by the candidate.

Reference:

2.4.9.4.1, "RFP TURBINE CONTROL TROUBLE"
14.13.2, "RFPT B CONTROL SYSTEM OPERATION CHECK"

Recommended Resolution:

Also accept "C"

1.4.3 At alarm processor, check a LOSS OF SPEED FEEDBACK has not caused an alarm. If a LOSS OF SPEED FEEDBACK alarm is locked in, do not attempt to override FW HOLD.

1.4.4 At FEEDWATER OVD SYS Panel RF-CU-9A (RF-CU-9B) (middle of Signal Processor Cabinet Cable Spreading Room), adjust OVD POS until "= fw" LED light is at its brightest.

1.4.5 At FEEDWATER OVD SYS Panel RF-CU-9A (RF-CU-9B), place OVERRIDE switch in ENABLE.

1.4.6 At FEEDWATER OVD SYS Panel RF-CU-9A (RF-CU-9B), adjust POS knob clockwise until % FEEDWATER value is 97% ± 2%.

1.4.7 At Startup Station in Control Room, check FW DEMAND display indicates 97% ± 2%.

1.4.8 In Control Room, reset FW HOLD by pressing FW HOLD RESET button on Startup Station.

1.4.9 Control RPV level by raising or lowering RFPT speed using MANUAL STARTUP SPEED CONTROL switch.

1.5 Return RFPT Control System to normal operation by perform following:

1.5.1 Ensure cause of FW HOLD and/or LOCKOUT has been corrected (Vital Alarms have cleared).

1.5.1.1 Refer to Step 6.3 for Vital Alarms.

1.5.2 Ensure RFP can be manually controlled by MANUAL STARTUP SPEED CONTROL switch at Startup Station or STARTUP IN SERVICE LED is on and RFP is stable at HOLD speed.

1.5.3 Ensure affected RFP FW CONTROLLER STATION is in MAN.

1.5.4 Ensure MASTER FLOW CONTROLLER is in MAN if both RFPs are in HOLD or in AUTO and controlling RPV level if only one RFP is in HOLD.

6.2.3 Diagnostic (black on brown) alarms (8) - IAC notification.

6.3 VITAL ALARMS (WHITE ON RED)

6.3.1 Loss of Speed Feedback: The controller has lost the speed feedback signal from both redundant channels and a fixed frequency feedback signal is being used which is the speed just before the loss.

6.3.2 Dual Power Supply Failure at Controller: Both of the redundant DC power supplies have failed causing a loss of most controller functions. The RFPT cannot be controlled in this condition and the RFPT will coast down.

[ ] **NOTE** - Speed Microcomputer Malfunction alarms can occur intermittently when RFPT speed is between 3550 and 3610 rpm. If alarm resets within 15 seconds as indicated on Signal Processor Cabinet CRT display, no actual failure has occurred.

6.3.3 Microcomputer Malfunction: The specified system microcomputer has suffered a malfunction which prevents proper system speed control. This condition may or may not be a permanent failure.

6.3.4 Undefined and Errant Excursion: The RFPT has experienced a speed excursion which does not conform to current demand or feedback signal levels.

Rate of change

6.3.5 Loss of Feedwater Flow Signal: The feedwater flow signal is below normal minimum level. This could result in a loss of overfeed protection.

6.3.6 Loss of Feedwater Demand Signal: The feedwater demand signal input is below normal minimum. This results in the affected RFPT control going to FW HOLD.

Question based on

6.4 DEVIANCE ALARMS (WHITE ON BLUE)

6.4.1 Controller Demand Deviance.

6.4.2 Speed Response Deviance.

6.4.3 Regulation A - Curve Error (Speed Control).

6.4.4 Regulation B - Curve Error (Speed Control).

6.4.5 Regulation C - Curve Error (Speed Control).

1. RFPT(s) IN FLOW LIMIT

[ ] **NOTE 1** - When FLOW LIMIT LED is on solid, controller is flow limiting and setting flow limit clamp lower. When FLOW LIMIT LED is flashing fast (~ 2 flashes per second), flow limit signal is lower than FW DEMAND signal. When FLOW LIMIT LED is flashing slow (~ 1 flash per second), flow limit signal is greater than FW DEMAND signal and controller can be reset.

[ ] **NOTE 2** - If feed flow exists and alarms are acknowledged, at Signal Processor Cabinet, before resetting the flow limit, Annunciator A-1/E-6 (A-2/E-3), RFP TURBINE A (B) TURBINE CONTROL TROUBLE, will re-alarm when flow limit is reset in the Control Room.

1.1 When FLOW LIMIT LED is flashing fast, take following steps to reset controller:

1.1.1 Place FW CONTROLLER STATION (Panel 9-5) for affected RFP in manual.

1.1.2 Adjust controller to find point where FLOW LIMIT LED flashes slowly.

1.1.3 Using MANUAL STARTUP SPEED CONTROL (Panel A), lower STARTUP DEMAND to just less than 85%.

1.1.3.1 RFP controls are now out of Flow Limit Mode and RFP is being controlled by manual output of FW CONTROLLER STATION.

1.1.3.2 Check FLOW LIMIT LED is off.

1.1.4 Raise STARTUP DEMAND to greater than 95%.

1.1.5 If conditions allow, balance FW CONTROLLER STATION and place it in BAL.

[ ] 6.4.6 Regulation D - Curve Error (Speed Control).

[ ] 6.4.7 Regulation Board A/D or D/A Error.

[ ] 6.5 DIAGNOSTIC ALARMS (BLACK ON BROWN)

[ ] 6.5.1 Startup Demand D/A Roll-over or Roll-under.

[ ] 6.5.2 Demand Signal Tracking Error.

[ ] 6.5.3 Feedwater Override System Inoperative.

[ ] 6.5.4 Controller Low-Select Function Error.

[ ] 6.5.5 I-to-P Low Signal.

[ ] 6.5.6 Power Supply Problem.

[ ] 6.5.7 Alpha Speed Channel Malfunction.

[ ] 6.5.8 Beta Speed Channel Malfunction.

[ ] 6.6 The Flow Limit Mode of RFP Control is designed to prevent exceeding MCPR Limit during a feedwater transient due to a runaway RFP.

[ ] 6.7 The flashing FLOW LIMIT LED indicates controller is no longer in Flow Limit Mode. When LED is flashing slow, FW CONTROLLER STATION output is at or below signal being generated by LCC controller. The LCC controller can then be reset without causing a speed raise excursion.

[ ] 6.8 Any time RFP(s) go into Flow Limit Mode, RFP(s) should operate to lower total feedwater flow.

[ ] 6.9 A condition that causes a RFP to lockout will also cause the RFP Controls to go into FW HOLD.

[ ] 6.10 During a loss of control signal to a RFP, RPV level is more difficult to control and power changes may be needed in order to establish feed flow consistent with steam flow.

[ ] 6.11 One feed pump with a full condensate lineup is capable of sustaining ~ 600 MWe output. If only one feed pump is on line, it is advisable to put the second feed pump on line as soon as possible or reduce power with recirculation flow.

1. DISCUSSION

1.1 The Feedwater Control System ensures proper water level inventory during all conditions of plant operation. The control system is a 3-element system employing inputs from reactor vessel level, steam flow, and feedwater flow. The system receives the Feedwater Control System output signal, two redundant turbine speed signals, and a total feedwater flow signal. Using these signals, the control system provides an output which determines feed flow to the reactor.

1.2 The control system provides four varying rates for manually controlling feedwater flow. At high flow rates, the system will control on total feedwater flow, instead of feedwater demand or turbine speed, to limit total feedwater flow to the reactor.

1.3 This procedure implements field pre-op tests, a Controller Rack Functional Test, verifies correct feedwater loop operation including the total feedwater flow limiting function, tests the ability of the valve positioner to stroke the steam control valve, verifies the feedback signal and verifies the loss of control signal lockout function. It should be performed during refueling outages.

2. REFERENCES

2.1 DRAWINGS

2.1.1 B&R Drawing 3041, Sheets 10A and 10B.

2.1.2 GE Drawing 791E257.

2.2 VENDOR MANUALS

2.2.1 CNS Number 0138, Reactor Feed Pump Turbine.

2.2.2 CNS Number 1319, Lovejoy RFPT Control System.

2.3 PROCEDURES

2.3.1 Instrument and Control Procedure 14.13.4, RFPT B Control System Calibration.

Exam Question: **80** (RO only)

Select the statement below which best describes the relationship between the main turbine and the Extraction Steam and Heater Drains system.

A. In the event of a turbine trip, the non-return valves and dump valves are actuated on a loss of turbine auto-stop oil pressure.

B. The turbine output will decrease with the loss of extraction steam.

C. In the event of a turbine trip, the turbine oil operated pilot valve will reposition to pressurize the NRV supply air header.

D. In the event of a turbine trip, the heater trip solenoid valve will deenergize causing the NRVs to reposition.

Exam Answer:

A. In the event of a turbine trip, the non-return valves and dump valves are actuated on a loss of turbine auto-stop oil pressure.

Question/Answer Problem Statement:

Both "A" and "D" are correct. Westinghouse Drawing 721J120 shows the effects of a loss of auto-stop oil (which occurs on a main turbine trip) via the interface valve which supports "A" as a correct answer. Burns & Roe drawing 3033 and page 19 of procedure 2.2.29 support "D" as a correct choice.

Reference:

Westinghouse Drawing 721J120
Burns & Roe drawing 3033
Procedure 2.2.29, "FEEDWATER HEATERS AND EXTRACTION STEAM SYSTEM"

Recommended Resolution:

Also accept "D"

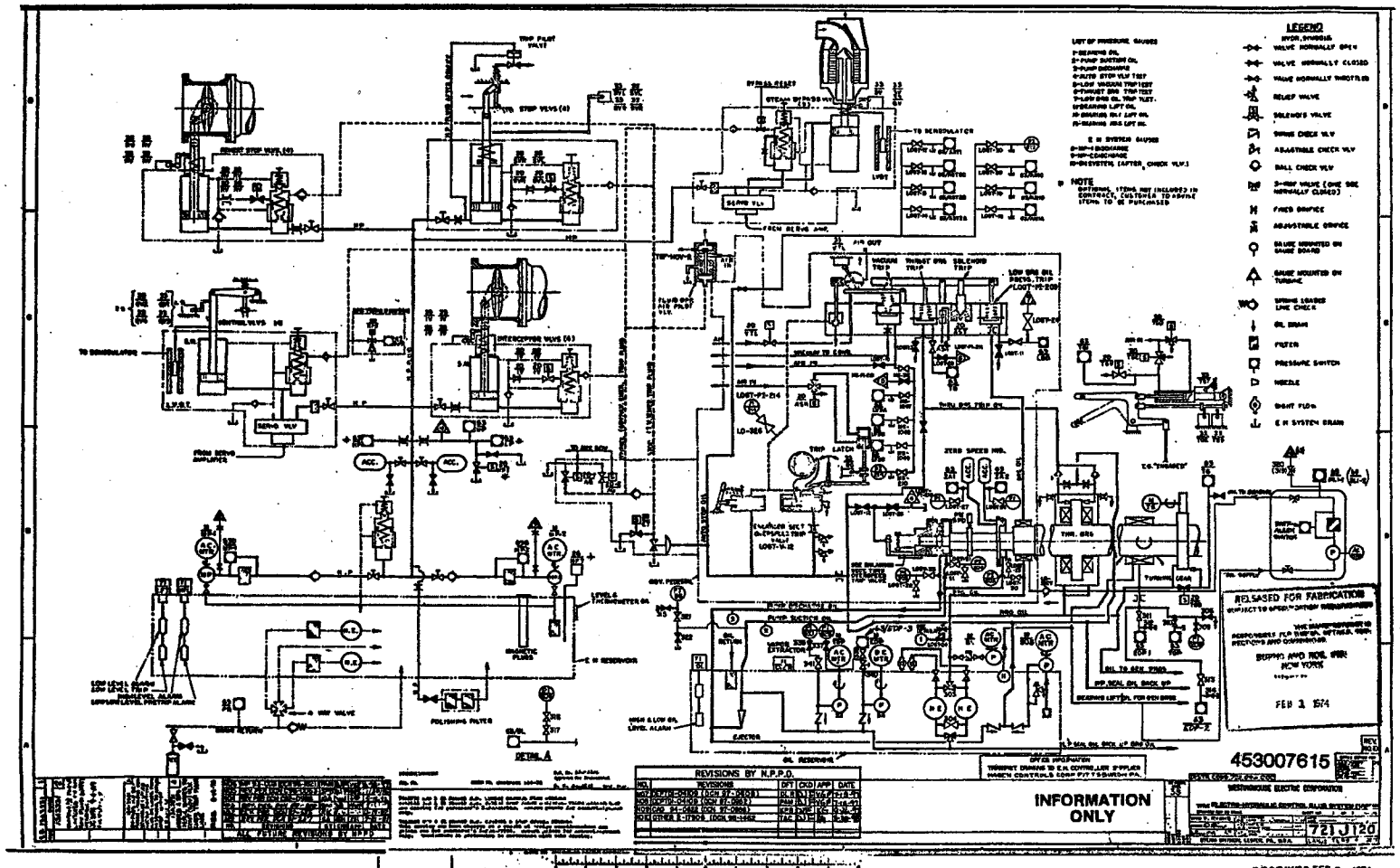

RECEIVED
OCT 24 1973
DIVISION OF
TECHNICAL REVIEW

RECEIVED FEB 7 1974

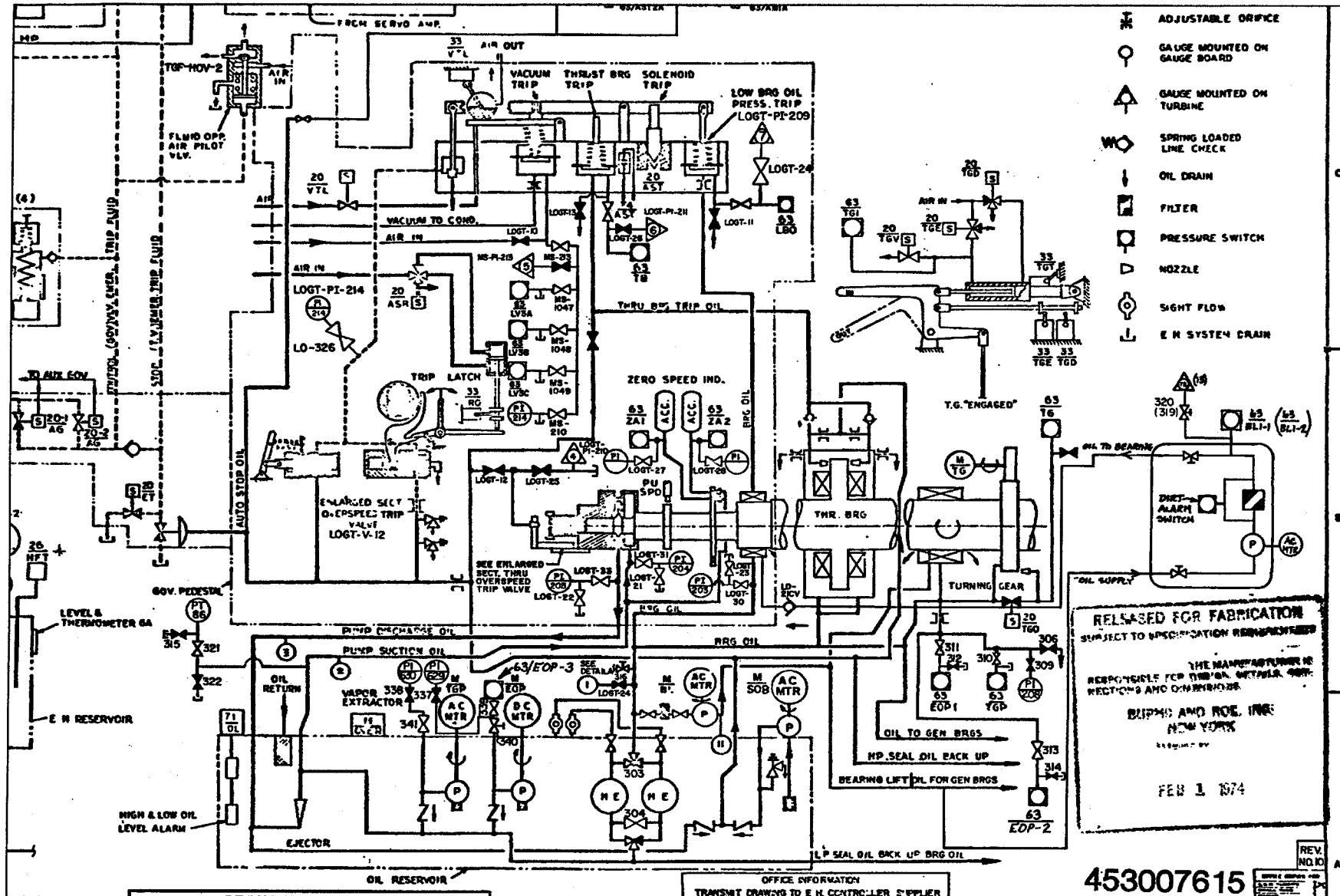

RECEIVED FEB 7 1974

b. The right hand gauge displays the controller output pressure to control the LCV position from one heater to the next and also to control the LCV from the same heater to its respective condenser.

2. INTERLOCKS AND SETPOINTS

2.1 Dump valves (DV-1 through DV-8) will open on following:

2.1.1 Turbine trip.

2.1.2 NRV disc closed on associated steam line.

2.1.3 High-high heater water level (NRVSPV tripped). Note the associated HEATER LEVEL TRIP Annunciator comes in on PANEL A-2.

2.1.4 Loss of air pressure.

2.2 Dump valves (DV-1 through DV-8) will stay closed when the motor operator on the non-return valve is closed.

2.3 Dump valve DV-9 will open on high level in Heater A-1 and on a turbine trip.

2.4 Dump valve DV-10 will open on high level in Heater B-1 and on a turbine trip.

2.5 NRVSPV will trip and close NRV air operator to allow the disc to close and the dump valves to open on:

2.5.1 High-high heater water level.

2.5.2 Turbine trip.

2.5.3 Manually.

2.6 ES-MO-58 will close on a main turbine trip.

3. REFERENCES

3.1 UPDATED SAFETY ANALYSIS REPORT

3.1.1 Volume II, Section IV, Subsection 11, Main Steam Lines and Feedwater.

DISC POSITION INTERLOCKS (B)	(D)	INSTR RACK (R)	CIRCUIT # (L)	WIRE NUMBERS (E)	(F)	(G)	(H)	TEST PB (C)
-	DV-SPV-5	IR-1A	CCP2A-2	-	-	DV-SPV-5-1	DV-SPV-5-2	9
-	DV-SPV-6	IR-1A	CCP2A-2	-	-	DV-SPV-6-1	DV-SPV-6-2	10
-	DV-SPV-7	IR-1B	CCP2B-2	-	-	DV-SPV-7-1	DV-SPV-7-2	11
-	DV-SPV-8	IR-1B	CCP2B-2	-	-	DV-SPV-8-1	DV-SPV-8-2	12
-	DV-SPV-1	IR-1A	CCP2A-2	-	-	DV-SPV-1-1	DV-SPV-1-2	5
-	DV-SPV-2	IR-1A	CCP2A-2	-	-	DV-SPV-2-1	DV-SPV-2-2	6
-	DV-SPV-3	IR-1B	CCP2B-2	-	-	DV-SPV-3-1	DV-SPV-3-2	7
-	DV-SPV-4	IR-1B	CCP2B-2	-	-	DV-SPV-4-1	DV-SPV-4-2	8
-	-	IR-1A	CCP2A-2	-	-	-	-	-
-	-	IR-1B	CCP2B-2	-	-	-	-	-
-	-	IR-1A	CCP2A-2	-	-	-	-	-
-	-	IR-1B	CCP2B-2	-	-	-	-	-

EXTRACTION STEAM SYSTEM NON-REVERSE VALVE DISC POSITION

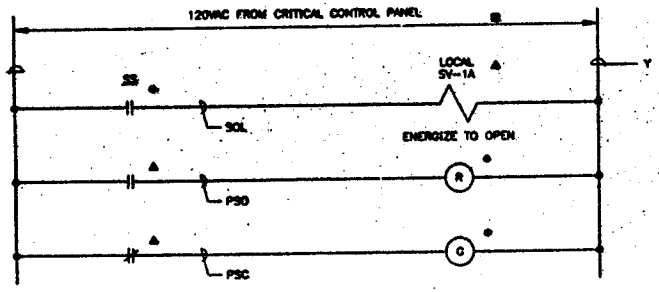

SOLENOID VALVE ▲	SELECTOR SWITCH ●	120VAC CRITICAL CONTROL POWER PANEL ■	DIVISION
NB1-SOV-SSV738	NB1-SW-S48	CCP1A CKT #1	I
NB1-SOV-SSV739	NB1-SW-S50	CCP1B CKT #2	II

REACTOR WATER LEVEL REFERENCE LEG INJECTION
(FOR SELECTOR SWITCH DEVELOPMENT
SEE "SS/NB1-SW-S49" DWG 3406 SH 2)

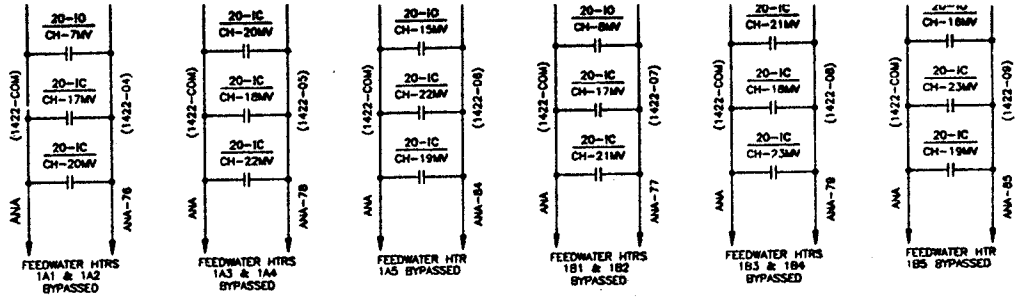

FEEDWATER HEATER ALARMS

NOTES:
1. ALARM CIRCUITS INDICATED ABOVE, TO BE RUN TO ANNUNCIATOR ON BENCH BOARD "A" DWG 3755 SHEETS 1, 4 & 5.
2. AN ADDITIONAL SET OF CONTACTS TO BE PROVIDED FOR CONNECTION TO COMPUTER 40-27 WITH NUMBERS IN PARENTHESIS.
3. ALARM CIRCUITS INDICATED ABOVE ARE THE SAME ALARM CONTACTS SHOWN BELOW EACH MOTOR OPERATED ELEMENTARY.

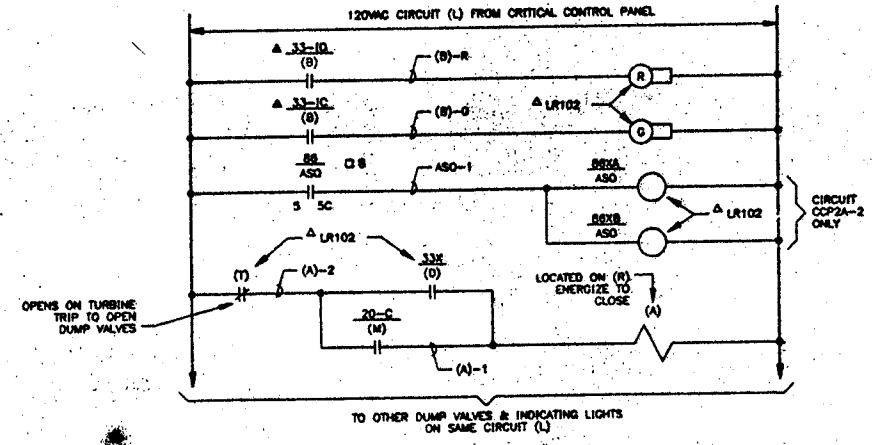

SOL PILOT (A)	DUMP VALVE (B)	NRV DISC POS (D)	MOTOR OPER ON (M)	INSTR RACK (R)	TURB TRIP INT'L K (T)	CKT (L)
DV-SPV-1	DV-1	NRV-5	NRV-5	IR-1A	86XA/ASO	CCP2A-2
DV-SPV-2	DV-2	NRV-6	NRV-6	IR-1A	86XA/ASO	CCP2A-2
DV-SPV-3	DV-3	NRV-7	NRV-7	IR-1B	86XB/ASO	CCP2B-2
DV-SPV-4	DV-4	NRV-8	NRV-8	IR-1B	86XB/ASO	CCP2B-2
DV-SPV-5	DV-5	NRV-9	NRV-9	IR-1A	86XA/ASO	CCP2A-2
DV-SPV-6	DV-6	NRV-10	NRV-10	IR-1A	86XA/ASO	CCP2A-2
DV-SPV-7	DV-7	NRV-11	NRV-11	IR-1B	86XB/ASO	CCP2B-2
DV-SPV-8	DV-8	NRV-12	NRV-12	IR-1B	86XB/ASO	CCP2B-2

EXTRACTION STEAM - PRIMARY DUMP VALVES (G)

NON CONTROLLED

SEP 2 8 199

N.P.P.D., R.A.

AS BUILT
454003916

CADD DRAWING
DO NOT REVISE MANUALLY

* THIS DRAWING GENERATED BY NPPD

FOR PREVIOUS REVISIONS, SEE SUPERSEDED CARDS.

REVISIONS BY N.P.P.D.

NO.	REVISIONS	DFT	CKD	APP	DATE
N09	DCN99-0759	RAC	JAC	RGA	6/17/99

COOPER NUCLEAR STATION
CONTROL ELEMENTARY DIAGRAMS

DRAWN RAC DATE 10/3/97
CHECKED DATE
APPROVED DATE
SEE SUPERSEDED CARDS
FILMED

BURNS & ROE*

3033 SH 2

REVISION N09

CADD FILE C0023383

19 NPPD

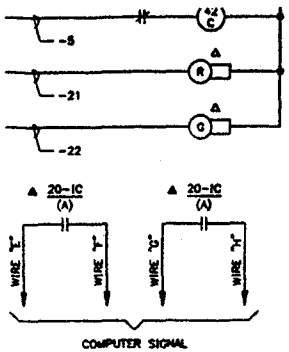

WIRE NUMBER					
	"D"	"E"	"F"	"G"	"H"
A	ANA-78	1422-COM	1422-04	1422-COM	1422-05
	ANA-79		1422-07		1422-08
	ANA-78		1422-05		1422-06
	ANA-85		1422-08		1422-09
	-	-	-	-	-
	-	-	-	-	-
	-	-	-	-	-
	-	-	-	-	-
	-	-	-	-	-
	-	-	-	-	-
	-	-	-	-	-
	-	-	-	-	-

NO SEALIN

& HEATER DRAIN VALVES
ERATED)

THROTTLING VALVES

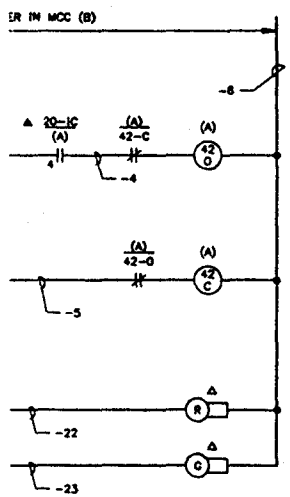

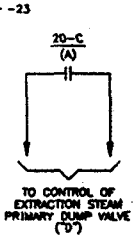

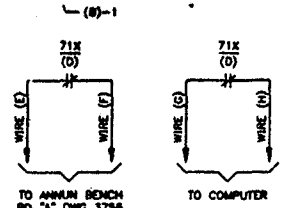

(J)

TEST PB	NRV TRIP SOL VALVE		LEVEL SW OR RELAY	INSTR RACK	FEEDER	WIRE NUMBERS			
(C)	(A)	(B)	(D)	(R)	(K)	(E)	(F)	(G)	(H)
4	NRV-SPV-9	NRV-SPV-10	LS-63C	IR-1A	DC465	ANA	ANA 47	1421-COM	1421-05
4	NRV-SPV-11	NRV-SPV-12	LS-68C	IR-1B	DC466		ANA 52	1421-COM	1421-21
3	NRV-SPV-5	NRV-SPV-6	LS-62C	IR-1A	DC465		ANA 48	1421-COM	1421-02
3	NRV-SPV-7	NRV-SPV-8	LS-67C	IR-1B	DC466		ANA 53	1421-COM	1421-18
2	NRV-SPV-3	-	LS-61C	IR-1A	DC465		ANA 49	1420-COM	1420-22
2	NRV-SPV-4	-	LS-66C	IR-1B	DC466		ANA 54	1420-COM	1421-15
1	NRV-SPV-1	-	LS-60C	IR-1A	DC465		ANA 50	1420-COM	1420-19
1	NRV-SPV-2	-	LS-65C	IR-1B	DC466		ANA 55	1421-COM	1421-12

EXTRACTION STEAM SYS - NRV TRIP SOL VALVE (J)

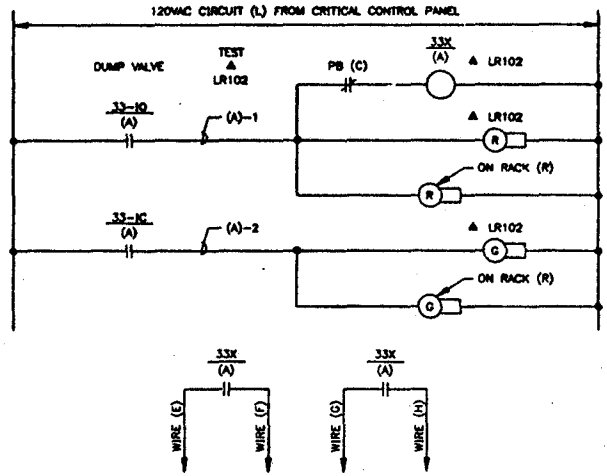

NRV DISC POS	DISC POSITION INTERLOCKS		INSTR RACK	CIRCUIT #	WIRE NUMBERS				TEST PB
(A)	(B)	(D)	(R)	(L)	(E)	(F)	(G)	(H)	(C)
NRV-9	-	DV-SPV-5	IR-1A	CCP2A-2	-	-	DV-SPV-5-1	DV-SPV-5-2	9
NRV-10	-	DV-SPV-6	IR-1A	CCP2A-2	-	-	DV-SPV-6-1	DV-SPV-6-2	10
NRV-11	-	DV-SPV-7	IR-1B	CCP2B-2	-	-	DV-SPV-7-1	DV-SPV-7-2	11
NRV-12	-	DV-SPV-8	IR-1B	CCP2B-2	-	-	DV-SPV-8-1	DV-SPV-8-2	12
NRV-5	-	DV-SPV-1	IR-1A	CCP2A-2	-	-	DV-SPV-1-1	DV-SPV-1-2	5
NRV-6	-	DV-SPV-2	IR-1A	CCP2A-2	-	-	DV-SPV-2-1	DV-SPV-2-2	6
NRV-7	-	DV-SPV-3	IR-1B	CCP2B-2	-	-	DV-SPV-3-1	DV-SPV-3-2	7
NRV-8	-	DV-SPV-4	IR-1B	CCP2B-2	-	-	DV-SPV-4-1	DV-SPV-4-2	8
NRV-3	-	-	IR-1A	CCP2A-2	-	-	-	-	-
NRV-4	-	-	IR-1B	CCP2B-2	-	-	-	-	-
NRV-1	-	-	IR-1A	CCP2A-2	-	-	-	-	-
NRV-2	-	-	IR-1B	CCP2B-2	-	-	-	-	-

EXTRACTION STEAM SYSTEM
NON-REVERSE VALVE DISC POSITION

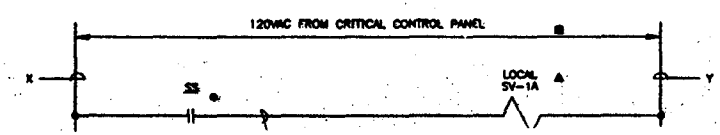

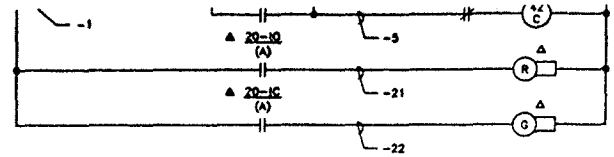

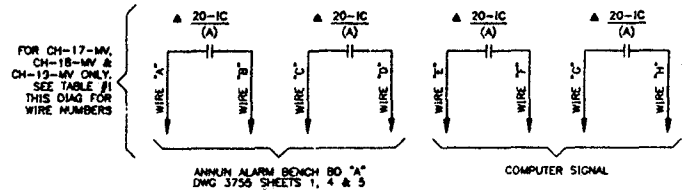

VALVE # (A)	MCC # (B)	WIRE PREFIX	REMARKS
BS-88MV	C	BS88MV	SERVES HEATER "1A5"
BS-89MV	H	BS89MV	SERVES HEATER "1B5"
BS-90MV	C	BS90MV	SERVES HEATER "1A4"
BS-91MV	H	BS91MV	SERVES HEATER "1B4"
BS-92MV	C	BS92MV	SERVES HEATER "1A3"
BS-93MV	H	BS93MV	SERVES HEATER "1B3"
BS-94MV	C	BS94MV	SERVES HEATER "1A2"
BS-95MV	H	BS95MV	SERVES HEATER "1B2"
BS-96MV	C	BS96MV	SERVES HEATER "1A1"
BS-97MV	H	BS97MV	SERVES HEATER "1B1"
BS-98MV	C	BS98MV	SERVES HEATER "1A1"
BS-99MV	H	BS99MV	SERVES HEATER "1B1"
CH-17-MV	C	CH17MV	-
CH-18-MV	H	CH18MV	-
CH-19-MV	C	CH19MV	-

TABLE #1 WIRE NUMBERS FOR F			
VALVE #	WIRE "A"	WIRE "B"	WIRE "C"
CH-17-MV	ANA	ANA-76	ANA
CH-18-MV	ANA	ANA-78	ANA
CH-19-MV	ANA	ANA-84	ANA

FEEDWATER HEATER VENT & BYPASS VALVES
(MOTOR OPERATED)

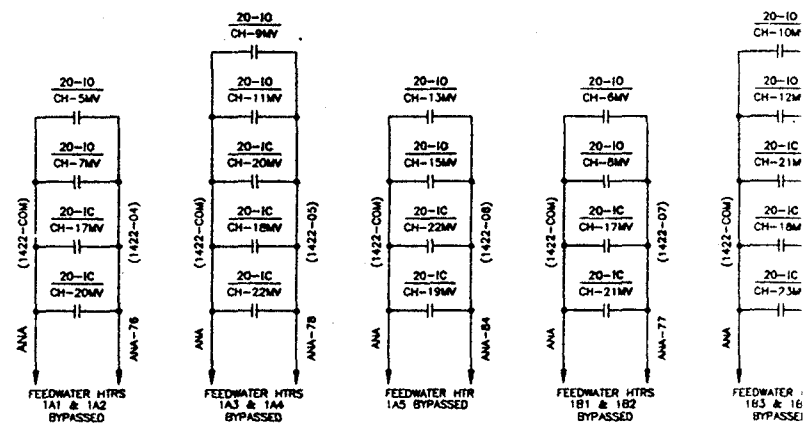

FEEDWATER HEATER ALARMS

NOTES:

1. ALARM CIRCUITS INDICATED ABOVE, TO BE RUN TO ANNUNCIATOR ON BENCH BOARD "A" DWG 3755 SHEETS 1, 4 & 5.
2. AN ADDITIONAL SET OF CONTACTS TO BE PROVIDED FOR CONNECTION TO COMPUTER 40-27 WITH NUMBERS IN PARENTHESIS
3. ALARM CIRCUITS INDICATED ABOVE ARE THE SAME ALARM CONTACTS SHOWN BELOW EACH MOTOR OPERATED ELEMENTARY.

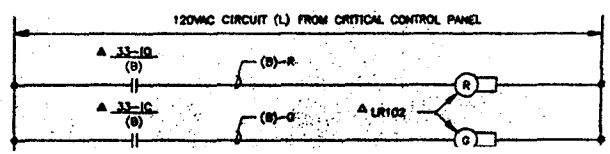

Fig. 5

2. Under normal operating conditions, the NRVs are held full open by 70-100 psig plant air. The air is supplied to the air cylinder through four trip valves.

SO-06

3. Removal of air from the operators allows the NRVs to function as check valves. In this condition, extraction steam flowing to the Feedwater heaters will maintain the valves in an intermediate position, whereas reverse flow back to the turbine would cause the valves to fully close. The following four trip valves are used to remove air from the air operator:

LO-03e
LO-05

a. Turbine Oil Operated Air Pilot Valve

During normal operation, turbine Digital Electro Hydraulic emergency trip header pressure is used to align this valve to supply air to the extraction steam non-return valves. In the event of a turbine trip, the Digital Electro Hydraulic emergency trip header pressure is removed, causing the valve to reposition. The valve will isolate the air supply and align to vent off the NRV air supply header.

b. Heater trip solenoid valve

The heater trip solenoid valve is normally de-energized, allowing air pressure to pass through to the NRV air operator. On a Feedwater heater shell high level trip, this solenoid valve energizes, isolating the air supply and venting the air pressure from the air operator and tripping the associated NRV. The heater trip solenoid valve can also be tripped by pressing the associated Level Trip pushbutton on IR-1A (1B) to simulate a high level. The heater trip solenoid valve, once energized (or tripped), must be manually reset.

c. Local test valve

The local test valve is a manually operated valve located at the appropriate instrument rack, IR-1A for the A heaters and IR-1B for the B heaters. When the test valve handle is lifted, the supply air header is isolated and the NRV air operator is vented off.

d. Remote test and trip valve

As with the heater trip valve, the test and trip valve is solenoid operated. The test and trip valve is normally energized, connecting the NRV air operator to the air supply header. The solenoid will de-energize, venting off the air operator, on a turbine trip or if the associated Test Trip pushbutton on IR-1A(1B) is pressed. The valve will re-energize when the turbine trip is reset or the pushbutton is released.

SO-07c

4. The NRV motor operator, which allows shutting the valve, is controlled by open and close pushbuttons on a local rack (LR-102). During normal operations, the motor operator is in the OPEN position allowing the NRV to be positioned by its air operator. When taken to the CLOSE position, the motor operator forces the NRV closed. This changes the function of the NRV from a check valve to an isolation valve.

Exam Question: 94 (RO only)

Concerning the HPCI system, Which one (1) of the following accurately describes the response of the system to a flow signal malfunction?

A. If the flow controller receives a maximum signal from the flow transmitter, this will result in a minimum output signal to the speed controller, which causes the HPCI turbine speed to decrease to idle speed.

B. Loss of HPCI flow signal results in a minimum speed controller output signal, which causes the turbine speed to decrease to idle speed and **Cannot** be adjusted in the manual mode of the flow controller.

C. If the flow controller receives a maximum flow signal, this will result in a maximum output signal to the speed controller, which will cause the turbine speed to increase and trip at 125 percent speed.

D. If the flow controller fails low, the HPCI turbine speed will decrease to idle speed and **Can** be adjusted in the manual mode of the flow controller.

Exam Answer:

A. If the flow controller receives a maximum signal from the flow transmitter, this will result in a minimum output signal to the speed controller, which causes the HPCI turbine speed to decrease to idle speed.

Question/Answer Problem Statement:

Choice "A" is correct. Choice "D" is also correct as it states the same information with additional correct information. The stem identifies the cause of the failure is a ***flow signal*** malfunction. If the ***flow signal*** fails high, the ***flow controller*** would fail low, resulting in HPCI at idle speed. Under these conditions, placing HPCI flow controller in MANUAL would allow control of HPCI speed and flow.

Reference:

Procedure 2.2.33.1, "HIGH PRESSURE COOLANT INJECTION SYSTEM OPERATIONS"
GEK 16601A

Recommended Resolution:

Also accept "D".

operates only when the input exceeds the limit setting. The limiter provides an output current equal to the high limit setting whenever the input signal is higher than that setting. The limiter provides an output current signal equal to the low limit setting whenever the input signal is less than that setting. The speed demand limiter is used to limit the speed range of the recirculation pumps (when demanded by the master controller) to a range between approximately 45 and 102.5% speed. The limits are adjustable over the full range of the 10 to 50 ma output signal of the master controller.

2-100 MV/I Converter (Computation Module). The MV/I converter accepts the tachometer variable dc voltage output and converts it to a 10 to 50 ma dc current signal output. One module is provided for each loop of the speed control system.

2-101 M/A Transfer Station. The M/A transfer station (Figure 2-8) provides the means for switching pump speed control from local manual to master manual control. One M/A transfer station is provided for each loop of the speed control system.

2-102 The control station front panel contains a control transfer switch, manual control knob, a deviation meter, generator speed indicator and an output meter. When the control transfer switch is in the AUTO position, the input signal passes through the station without change. This signal is also provided to the Plant Management Information System. In the MAN position, the input signal is shunted, and the output to the load is regulated by the manual control knob and a self-contained power supply. In the BAL and MAN positions, the deviation meter shows the difference between the control input signal and the manually-controlled output signal. The output indicator shows the percent signal going to the speed limiter.

2-103 When switching from MAN to AUTO, the operator should balance out deviation while in the MAN position before switching to AUTO. When switching from AUTO to MAN, the operator should first switch to BAL and balance out deviation while in this position before switching to MAN. In the MAN position, each transfer station generates the setpoint signal for its speed controller.

NOTE

In order to effect a bumpless transfer when switching from MAN to AUTO and from AUTO to MAN, the load compensating potentiometer must be adjusted to match the load resistance.

2-104 Speed Limiters. One station is provided for each loop of the speed control system. The No. 1 limiter serves a dual function. The lower portion of the unit is a speed limiter, which acts to provide the correct signal to position the fluid drive scoop

[ ] **CAUTION** - If reactor vessel level subsequently lowers, flow will only be injected at the rate the manual potentiometer is set. Constant Operator attention is required.

[ ] 4.16.3 MANUAL CONTROL (RPV LEVEL CONTROL)

[ ] 4.16.3.1 Ensure FLOW CONTROLLER, HPCI-FIC-108, in BAL.

[ ] 4.16.3.2 Balance out deviation on FLOW CONTROLLER with manual potentiometer.

[ ] 4.16.3.3 Switch HPCI-FIC-108 to MANUAL.

[ ] 4.16.3.4 Adjust manual potentiometer, as necessary, to maintain reactor vessel level.

[ ] 4.16.4 MANUAL CONTROL (RPV LEVEL/PRESSURE CONTROL WITH INITIATION SIGNAL CLEAR)

[ ] 4.16.4.1 Ensure FLOW CONTROLLER, HPCI-FIC-108, in BAL.

[ ] 4.16.4.2 Balance out deviation on FLOW CONTROLLER with manual potentiometer.

[ ] 4.16.4.3 Switch HPCI-FIC-108 to MANUAL.

[ ] 4.16.4.4 Depress INITIATION SIGNAL RESET pushbutton.

[ ] 4.16.4.5 Check amber INITIATION SIGNAL indicating light turns off.

[ ] 4.16.4.6 Open HPCI-MO-24, ECST TEST LINE SHUTOFF VLV.

[ ] 4.16.4.7 Perform following, as necessary, to control RPV pressure/level:

[ ] **CAUTION** - Adjusting HPCI-MO-21 may have a feedback effect on HPCI turbine speed. Turbine speed should be maintained in a range of 2050 to 4000 rpm.

[ ] a. Throttle HPCI-MO-21, TEST BYPASS TO ECST VLV, to maintain desired HPCI pump discharge pressure.

[ ] b. Adjust HPCI-FIC-108 to maintain desired turbine speed.

[ ] c. If RPV injection is no longer required, close HPCI-MO-19.

Exam Question: **98** (RO only)

The reactor is operating at 100 % power, steady state conditions. Which one of the following transients will present the most serious threat to the integrity of the fuel cladding?

A. Both reactor recirculation pumps trip.

B. Turbine pressure regulator output signal failed low.

C. Main turbine trip followed by turbine bypass valves failed closed.

D. Reactor feedwater flow controller malfunctions to maximum flow.

Exam Answer:

C. Main turbine trip followed by turbine bypass valves failed closed.

Question/Answer Problem Statement:

Both "C" and "D" are correct, depending on the specific core conditions during the current fuel cycle. The Cycle 20 analysis of anticipated operational occurrences includes only answers C and D plus the load reject.

For pressurization events, the CNS Supplemental Reload Licensing Report for Cycle 20 shows that either FW Controller Failure or Turbine Trip w/o Bypass could be limiting, depending upon the time in the cycle, the fuel type, and the operational modes considered. For example, considering GE9B fuel and the MELLL domain of operation, then the FW failure is more severe than the turbine trip at BOC while the turbine trip is more severe than the FW failure at EOC. For the analyzed transients, in general for this cycle, the FW failure is more severe for GE9B fuel, while the turbine trip is more severe for GE14 fuel.

Reference:

Reactor Engineering
J11-03650-10 "Supplemental Reload Licensing Report for Cooper Nuclear Station Cycle 20 Reload 19"

Recommended Resolution:

Also accept "D".

Pressurization events:

Exposure range: BOC20 to EHFP20-2205 MWd/MT (2000 MWd/ST) **Exposure point: EHFP20-2205 MWd/MT (2000 MWd/ST)**				
	Option A		**Option B**	
	GE14B	**GE8x8NB**	**GE14B**	**GE8x8NB**
FW Controller Failure	1.47	1.30	1.36	1.23
Load Reject w/o Bypass	1.51	1.28	1.40	1.21
Turbine Trip w/o Bypass	1.51	1.28	1.40	1.21

Exposure range: BOC20 to EHFP20-2205 MWd/MT (2000 MWd/ST) MELLL **Exposure point: EHFP20-2205 MWd/MT (2000 MWd/ST)**				
	Option A		**Option B**	
	GE14B	**GE8x8NB**	**GE14B**	**GE8x8NB**
FW Controller Failure	1.42	1.23	1.31	1.16
Turbine Trip w/o Bypass	1.48	1.22	1.37	1.15
Load Reject w/o Bypass	1.48	1.22	1.37	1.15

Exposure range: EHFP20-2205 MWd/MT (2000 MWd/ST) to EHFP20 **Exposure point: EHFP20**				
	Option A		**Option B**	
	GE14B	**GE8x8NB**	**GE14B**	**GE8x8NB**
FW Controller Failure	1.58	1.31	1.41	1.23
Load Reject w/o Bypass	1.63	1.30	1.46	1.22
Turbine Trip w/o Bypass	1.63	1.30	1.46	1.22

Exposure range: BOC20 to EHFP20 ICF **Exposure point: EHFP20**				
	Option A		**Option B**	
	GE14B	**GE8x8NB**	**GE14B**	**GE8x8NB**
FW Controller Failure	1.59	1.32	1.42	1.24
Load Reject w/o Bypass	1.63	1.31	1.46	1.23
Turbine Trip w/o Bypass	1.63	1.31	1.46	1.23

Exposure range: EHFP20-2205 MWd/MT (2000 MWd/ST) to EHFP20 MELLL Exposure point: EHFP20				
	Option A		**Option B**	
	GE14B	**GE8x8NB**	**GE14B**	**GE8x8NB**
FW Controller Failure	1.53	1.23	1.36	1.15
Turbine Trip w/o Bypass	1.59	1.24	1.42	1.16
Load Reject w/o Bypass	1.58	1.23	1.41	1.15

12. Overpressurization Analysis Summary

Event	Psl (psig)	Pv (psig)	Plant Response
MSIV Closure (Flux Scram)	1222	1246	Figure 17

13. Loading Error Results

Variable water gap misoriented bundle analysis: Yes [3]

Misoriented Fuel Bundle	ΔCPR
GE9B-P8DWB350-10GZ-80U-150-T (GE8x8NB)	0.14
GE9B-P8DWB350-10GZ1-80U-150-T (GE8x8NB)	0.14
GE14-P10HNAB385-14GZ-100T-148-T (GE14B)	0.10

14. Control Rod Drop Analysis Results

Cooper Nuclear Station operates in the banked position withdrawal sequence (BPWS), so the control rod drop accident analysis is not required. NRC approval to use the generic analysis is documented in NEDE-24011-P-A-13-US, August 1996. CNS implemented the BPWS into the Rod Worth Minimizer (RWM) as documented in License Agreement No. 117. Removal of the Rod Sequence Control System (RSCS) at CNS has been approved by the NRC in License Amendment No. 156.

[3] Includes a 0.02 penalty due to variable water gap R-factor uncertainty.

Correspondence Number: NLS2000118

The following table identifies those actions committed to by the District in this document. Any other actions discussed in the submittal represent intended or planned actions by the District. They are described to the NRC for the NRC's information and are not regulatory commitments. Please notify the NL&S Manager at Cooper Nuclear Station of any questions regarding this document or any associated regulatory commitments.

COMMITMENT	COMMITTED DATE OR OUTAGE
None	