KAYE, SCHOLER, FIERMAN, HAYS & HANDLER, LLP
A NEW YORK LIMITED LIABILITY PARTNERSHIP

THE McPHERSON BUILDING
901 FIFTEENTH STREET, N.W., SUITE 1100
WASHINGTON, D.C. 20005-2327

(202) 682-3500
FAX (202) 682-3580

sdunn@kayescholer.com

425 PARK AVENUE
NEW YORK, NY 10022-3598

1999 AVENUE OF THE STARS
SUITE 1600
LOS ANGELES, CA 90067-6048

SHANGHAI CENTRE
SUITE 405
1376 NANJING XI LU
PEOPLE'S REPUBLIC OF CHINA

PHILLIPS POINT, WEST TOWER
SUITE 1002
777 S. FLAGLER DRIVE
WEST PALM BEACH, FL 33401

NINE QUEEN'S ROAD CENTRAL
HONG KONG

WRITER'S DIRECT DIAL NUMBER
(202) 682-3584

November 9, 2000

BY HAND

Steven Crockett
5808 Sonoma Road
Bethesda, MD 20817

Re: State of Maine v. NRC

Dear Mr. Crockett:

Enclosed please find the State of Maine's Petition for Review of the Nuclear Regulatory Commission's Final Rule and Motion for Emergency Stay of the Nuclear Regulatory Commission Rule Approving the NAC-UMS Spent Nuclear Fuel Storage System. Both were filed today in the Court of Appeals for the D.C. Circuit. Please feel free to call with any questions or comments.

Sincerely,

Sean M. Dunn

SMD/ls

Enclosure

DOC. #13014597.WPD

KAYE, SCHOLER, FIERMAN, HAYS & HANDLER, LLP
A NEW YORK LIMITED LIABILITY PARTNERSHIP

THE McPHERSON BUILDING
901 FIFTEENTH STREET, N.W., SUITE 1100
WASHINGTON, D.C. 20005-2327

(202) 682-3500
FAX (202) 682-3580

sdunn@kayescholer.com

425 PARK AVENUE
NEW YORK, NY 10022-3598

1999 AVENUE OF THE STARS
SUITE 1600
LOS ANGELES, CA 90067-6048

SHANGHAI CENTRE
SUITE 405
1376 NANJING XI LU
PEOPLE'S REPUBLIC OF CHINA

PHILLIPS POINT, WEST TOWER
SUITE 1002
777 S. FLAGLER DRIVE
WEST PALM BEACH, FL 33401

NINE QUEEN'S ROAD CENTRAL
HONG KONG

WRITER'S DIRECT DIAL NUMBER
(202) 682-3584

November 13, 2000

BY HAND

Richard A. Meserve
Chairman
U.S. Nuclear Regulatory Commission
One White Flint North
Rockville, MD

Re: State of Maine v. NRC

Dear Mr. Meserve:

Enclosed please find the State of Maine's Petition for Review of the Nuclear Regulatory Commission's Final Rule and Motion for Emergency Stay of the Nuclear Regulatory Commission Rule Approving the NAC-UMS Spent Nuclear Fuel Storage System. Both were filed on November 9 in the Court of Appeals for the D.C. Circuit. Please feel free to call with any questions or comments.

Sincerely,

Sean M. Dunn

SMD/ls

Enclosure

DOC. #13014597.WPD

UNITED STATES COURT OF APPEALS
FOR DISTRICT OF COLUMBIA CIRCUIT
NOV - 9 2000
RECEIVED

IN THE
UNITED STATES COURT OF APPEALS
FOR THE DISTRICT OF COLUMBIA

State of Maine,
Petitioner,

v.

Nuclear Regulatory Commission,
Respondent.

No. 00-1476

PETITION TO SET ASIDE THE NUCLEAR REGULATORY COMMISSION'S RULE CERTIFYING THE NAC-UMS SPENT NUCLEAR FUEL STORAGE SYSTEM

The State of Maine petitions the Court, pursuant to 28 U.S.C. § 2342(4) (1976), to set aside the Nuclear Regulatory Commission's ("NRC's") amendment to Part 72 of its regulations, 10 CFR § 72.214, adding the NAC Universal Storage System ("NAC-UMS") to the list of approved spent nuclear fuel storage casks. The final amendment to the rule was published on October 19, 2000, and becomes effective on November 20, 2000. 65 Fed. Reg. 62581 (October 19, 2000) (attached hereto). The amendment approving the use of the NAC-UMS dual-purpose storage/transport cask at commercial nuclear power plants under a general license violates the NRC's own requirements for spent fuel storage cask approval, 10 CFR § 72.236, and is arbitrary,

capricious, an abuse of discretion, or otherwise not in accordance with law. Venue is appropriate in this Court pursuant to 28 U.S.C. § 2343.

Respectfully submitted,

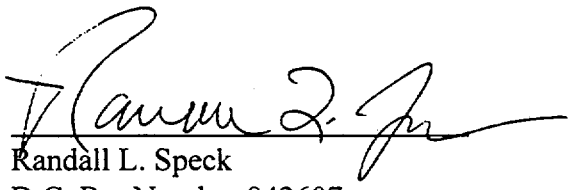

Randall L. Speck
D.C. Bar Number 942607
Kaye, Scholer, Fierman, Hays & Handler
901 Fifteenth Street, N.W.
Suite 1100
Washington, D.C. 20005
Tel. (202) 682-3510
Fax (202) 414-0320
Rspeck@KayeScholer.com

Counsel for the State of Maine

Date: November 9, 2000

CERTIFICATE OF SERVICE

I hereby certify that on this 9th day of November 2000, copies of the foregoing Petition to Set Aside the Nuclear Regulatory Commission's Rule Certifying the NAC-UMS Spent Nuclear Fuel Storage System were served by hand delivery upon the following:

John F. Cordes, Jr.
Solicitor, Office of General Counsel
U.S. Nuclear Regulatory Commission
One White Flint North
Rockville, MD

Richard A. Meserve
Chairman
U.S. Nuclear Regulatory Commission
One White Flint North
Rockville, MD

David L. Meyer
Chief, Rules and Directives Branch
Office of Administration
U.S. Nuclear Regulatory Commission
One White Flint North
Rockville, MD

Janet Reno
United States Attorney General
U.S. Department of Justice
810 Seventh Street, N.W.
Washington, D.C. 20531

James Kilbourne
Environmental Appellate Section
Department of Justice
Patrick Henry Building
601 D Street, N.W.
Room 8046
Washington, D.C. 20530

Further, I hereby certify that on this 9th day of November 2000, copies of the foregoing Petition to Set Aside the Nuclear Regulatory Commission's Rule Certifying the NAC-UMS Spent Nuclear Fuel Storage System were served by overnight Federal Express delivery upon the following parties who made comments to the proposed rule:

Thomas C. Thompson

Licensing & Competitive Assessment
NAC International, Inc.
655 Engineering Drive
Norcross, GA 30092

Fawn Shillinglaw
1952 Palisades Dr.
Appleton, WI 54915

Honorable J.G. Rowland
Governor, State of Connecticut
State Capital
Hartford, Connecticut 06106

David C. Jones
NAC Nuclear Technology Users Group
526 South Church Street
EC08F
Charlotte, N.C. 28078

George A. Zinke
Nuclear Safety and Regulatory Affairs
Maine Yankee Atomic Power Company
321 Old Ferry Road
Wiscasset, ME 04578-4922

Gregg R. Overbeck, Sr. V.P.
Arizona Public Service at Paloverde Nuclear Generating Station
Mail Station 7602
P.O. Box 52034
Phoenix, AZ 85072

Sean M. Dunn

Doc #13014546.WPD

Done in Washington, DC, on: October 12, 2000.

Thomas J. Billy,

Administrator.

[FR Doc. 00–26658 Filed 10–18–00; 8:45 am]

BILLING CODE 3410–DM–P

NUCLEAR REGULATORY COMMISSION

10 CFR Part 72

RIN 3150–AG32

List of Approved Spent Fuel Storage Casks: NAC–UMS Addition

AGENCY: Nuclear Regulatory Commission.

ACTION: Final rule.

SUMMARY: The Nuclear Regulatory Commission (NRC) is amending its regulations to add the NAC Universal Storage System (NAC–UMS) cask system to the list of approved spent fuel storage casks. This amendment allows the holders of power reactor operating licenses to store spent fuel in this approved cask system under a general license.

EFFECTIVE DATE: This final rule is effective on November 20, 2000.

FOR FURTHER INFORMATION CONTACT: Stan Turel, telephone (301) 415–6234, e-mail spt@nrc.gov of the Office of Nuclear Material Safety and Safeguards, U.S. Nuclear Regulatory Commission, Washington, DC 20555–0001.

SUPPLEMENTARY INFORMATION:

Background

Section 218(a) of the Nuclear Waste Policy Act of 1982, as amended (NWPA), requires that "[t]he Secretary [of Energy] shall establish a demonstration program, in cooperation with the private sector, for the dry storage of spent nuclear fuel at civilian nuclear reactor power sites, with the objective of establishing one or more technologies that the [Nuclear Regulatory] Commission may, by rule, approve for use at the sites of civilian nuclear power reactors without, to the maximum extent practicable, the need for additional site-specific approvals by the Commission." Section 133 of the NWPA states, in part, "[t]he Commission shall, by rule, establish procedures for the licensing of any technology approved by the Commission under Section 218(a) for use at the site of any civilian nuclear power reactor."

To implement this mandate, the NRC-approved dry storage of spent nuclear fuel in NRC-approved casks under a general license, publishing a final rule in 10 CFR part 72 entitled "General License for Storage of Spent Fuel at Power Reactor Sites" (55 FR 29181; July 18, 1990). This rule also established a new Subpart L within 10 CFR part 72 entitled, "Approval of Spent Fuel Storage Casks" containing procedures and criteria for obtaining NRC approval of dry storage cask designs.

Discussion

This rule will add the NAC–UMS cask system to the list of approved spent fuel storage casks in 10 CFR 72.214. Following the procedures specified in 10 CFR 72.230 of subpart L, NAC International (NAC) submitted an application for NRC approval with the Safety Analysis Report (SAR) entitled, "Safety Analysis Report for the NAC UMS Universal Storage System." The NRC evaluated the NAC submittal and issued a preliminary Safety Evaluation Report (SER) and a proposed Certificate of Compliance (CoC) for the NAC–UMS cask system. The NRC published a proposed rule in the **Federal Register** (64 FR 45918; August 23, 1999) to add the NAC–UMS cask system to the listing in 10 CFR 72.214. The comment period ended on April 5, 2000. Seven comment letters were received on the proposed rule.

Based on NRC review and analysis of public comments, the NRC has modified, as appropriate, its proposed CoC and the Technical Specifications (TS) for the NAC–UMS cask system. The NRC has also modified its SER in response to some of the comments.

The NRC finds that the NAC–UMS cask system, as designed and when fabricated and used in accordance with the conditions specified in its CoC, meets the requirements of 10 CFR part 72, subpart L. Thus, use of the NAC–UMS cask system, as approved by the NRC, will provide adequate protection of public health and safety and the environment. With this final rule, the NRC is approving the use of the NAC–UMS cask system under the general license in 10 CFR part 72, subpart K, by holders of power reactor operating licenses under 10 CFR part 50. Simultaneously, the NRC is issuing a final SER and CoC that will be effective on November 20, 2000. Single copies of the final CoC and SER will be available by November 2, 2000 for public inspection and/or copying for a fee at the NRC Public Document Room (PDR), 11555 Rockville Pike, Rockville, Maryland and electronically at *http://ruleforum.llnl.gov.*

Documents created or received at the NRC after November 1, 1999, are also available electronically at the NRC's Public Electronic Reading Room on the Internet at *http://www.nrc.gov/NRC/ADAMS/index.html.* The public can gain entry from this site into the NRC's Agency wide Document Access and Management System (ADAMS), which provides text and image files of the NRC's public documents. An electronic copy of the final CoC, Technical Specifications, and SER for the NAC–UMS cask system can be found in ADAMS under Accession No. ML003737374. However, because the NRC must incorporate the date of publication of this **Federal Register** notice into the CoC, these documents are not yet publicly available. The NRC will make these documents publically available by November 2, 2000. Contact the NRC PDR reference staff for more information. PDR reference staff may be reached at 1–800–397–4209, 301–415–4737, or by e-mail at *pdr@nrc.gov.*

Summary of Public Comments on the Proposed Rule

The NRC received seven comment letters on the proposed rule. The commenters included two utilities, an NAC–UMS cask users group, two States, and two members of the public. Copies of the public comments are available for review in the NRC Public Document Room, 11555 Rockville Pike, Rockville, MD and electronically at *http://ruleforum.llnl.gov.*

Comments on the NAC–UMS Cask System

The comments and responses have been grouped into nine subject areas: general, radiation protection, accident analysis, design, welds, structural, thermal, technical specifications (TS), and miscellaneous issues. Several of the commenters provided specific comments on the draft CoC, NRC's preliminary SER, and TSs. To the extent possible, all of the comments on a particular subject are grouped together. The NRC's decision to list the NAC–UMS cask system within 10 CFR 72.214, "List of approved spent fuel storage casks," has not been changed as a result of the public comments. A review of the comments and the NRC's responses follow:

A. General

Comment A–1: One commenter noted the regulatory analysis indicates that issuing a site-specific license would cost the NRC and the utility more time and money than the proposed action. The commenter asked for proof of this statement and suggested that a study or evaluation should be done. The commenter considers that in the long run it costs the NRC more time and

money to make all the site-specific changes needed later. Further, if each cask were site-specific, the vendor and utility would pay for a thorough analysis before presentation to the NRC, rather than the NRC "fixing up" everything at taxpayer expense after certification for a general license.

Response: The NRC disagrees with the comment. The scope of an NRC review of a cask design to be added under the listing of 10 CFR 72.214 is enveloped by the NRC review efforts to license that same cask design for a site-specific license. The NRC's review of that same cask design for a site-specific license also includes, but is not limited to, evaluations of siting factors, licensee financial qualifications, physical protection provisions, emergency plan provisions, the quality assurance program and the decommissioning plan. Clearly, and as stated in the regulatory analysis, the NRC and licensee costs would increase to conduct multiple site-specific reviews associated with the use of the same cask design.

Conducting site-specific reviews would ignore the alternative procedures and criteria currently in place for the addition of new cask designs that can be used under a general license and would be in conflict with the NWPA direction to the NRC to approve technologies for the use of spent fuel storage at the sites of civilian nuclear power reactors without, to the maximum extent practicable, the need for additional site reviews. It also would tend to exclude new vendors from the business market without cause and would arbitrarily limit the choice of cask designs available to power reactor licensees. Also, because of the long experience with the CoC process and other similar processes the NRC has determined that site-specific licensing would be inefficient because of the significant number of amendments that would have to be processed and therefore would add to the costs of granting CoCs rather than being more efficient.

Prior to storing spent fuel under the general license, each licensee must perform written evaluations to establish that: (1) The conditions set forth in the CoC have been met; (2) the reactor site parameters are encompassed by the cask design bases considered in the cask SAR and SER; and (3) other requirements detailed in 10 CFR 72.212 have also been met. Each general licensee must retain a copy of these written evaluations until spent fuel is no longer stored under the general license. Furthermore, these written evaluations may be inspected at any time by NRC staff.

The NRC's fee recovery structure in 10 CFR Parts 170 and 171 for the conduct of licensing and regulatory oversight activities under 10 CFR Part 72 does not differentiate between the type of license used (*i.e.*, general or specific).

Comment A–2: One commenter commented that the proposed rules for casks and the environmental assessments have become almost a "fill in the blank" form, and said that this needs rethinking. The commenter also made several general statements about the overall waste program and that everything is going too fast, spent fuel pools are filling to capacity, more cask designs being built by more inexperienced workers with the cheapest materials. The commenter suggested that the NRC examine the program and carefully evaluate the end result.

Response: This comment is beyond the scope of this rule that is focused solely on whether to add a particular cask design, the NAC–UMS cask system, to the list of approved casks. However, since the beginning of the CoC rulemaking process, the NRC and Congress have continuously evaluated the direction and progress of the program with the primary consideration continuing to be the health and safety of the public.

Comment A–3: One commenter cited a news article stating that one utility is seeking an accelerated licensing review and approval schedule for storage of fuel in the NAC–UMS, and was concerned that there may be pressure because of the schedule. The commenter asked how much public comment is valued when the public knows the approval needs to be completed as fast as possible. The commenter stated that NRC's job is to ensure public and worker safety.

Response: This comment is beyond the scope of this rule that is focused solely on whether to add a particular cask design, the NAC–UMS cask system, to the list of approved casks. However, since the beginning of the CoC rulemaking process, the NRC and Congress have continuously evaluated the direction, progress, and schedules of the program with the primary consideration continuing to be the health and safety of the public. The public comment and response procedure has always been and will continue to be an important part of the rulemaking process.

Comment A–4: One commenter did not receive the reference section as listed in the Table of Contents for the SER and asked why. The commenter stated that the references and dates are important and that the public wants these references and dates. However, the references are often dated from the 1970's causing concern to the commenter. The commenter requested the missing pages from the SER.

Response: The NRC separately provided the reference section of the SER issued with the preliminary SER to the commenter. The NRC had appropriately included the dates of references in the preliminary SER, and is uncertain why the commenter did not receive this section.

Comment A–5: One commenter noted differences between NAC–MPC and NAC–UMS and stated that the terms "multipurpose" and "universal" are not explained. The commenter stated the casks are for storage only at this point and that is what they should be called in the documents.

Response: Similarities or differences between the NAC–UMS cask design under consideration and any other cask design are beyond the scope of this rulemaking. The terms "universal" and "multi-purpose" have been selected by the applicant as descriptive of the system's design flexibility. The NRC agrees with the commenter that the NAC–UMS cask design evaluated in this rulemaking is limited to its acceptability for storage. However, the NRC does not consider descriptive nomenclature of the intended use beyond storage to be inappropriate.

Comment A–6: One commenter asked what the "M" in UMS stands for and why is it not USS for Universal Storage System.

Response: The NAC–UMS is the model name selected by the vendor. UMS stands for "Universal MPC System," where MPC is intended to indicate "multi-purpose canister."

Comment A–7: One commenter agreed with one of the State's published comments. Several comments also were made on topics pertaining to the decommissioning of the Maine Yankee site.

Response: The agreement with the State's published comments was noted. The State's comments in their entirety have been considered within this section. The comments pertaining to the decommissioning of the Maine Yankee site are outside the scope of this rule.

B. Radiation Protection

Comment B–1: One commenter disagreed with the SER statement that it is unnecessary for the applicant to specify the source term for the confinement analyses and stated that the source term and corresponding dose consequence should be provided to the public in these documents. The

commenter stated there is no reason not to require this information that the NRC may need to know in the future.

Response: The NRC disagrees with the comment. Revision 1 of Interim Staff Guidance (ISG) No. 5, "Confinement Evaluation" specifies that for storage casks having closure lids that are designed and tested to be leak tight as defined in "American National Standard for Leakage Tests on Packages for Shipment of Radioactive Materials," American National Standards Institute (ANSI) N14.5–1997, detailed confinement analyses are not necessary. Therefore, the applicant is not required to provide a detailed analysis of the leakage of radioactive materials through the welded canister. As indicated in SAR Section 7.1, the confinement boundary is completely welded and inspected in accordance with both the American Society of Mechanical Engineers (ASME) Code and ISG No. 4, "Cask Closure Weld Inspections," and is leak tested to ANSI leaktight standards. Further, the analyses presented in the SAR demonstrated that the stresses, temperatures, and pressures of the Transportable Storage Canister (TSC) are within the design basis limits under the accident conditions identified by the applicant and that the confinement boundary of the TSC remains intact for all credible accidents. The NRC concurs with the evaluation in the SAR and believes that the design of the confinement boundary, that includes the inspection of welds is adequately rigorous and meets the applicable regulations.

Comment B–2: One commenter asked if there is an explanation in the SAR of detailed plans for how to dispose of the radioactive gases purged from the canister with nitrogen during unloading. The commenter asked if the disposal process has been clearly thought out so it could be performed the day after a cask is loaded, if necessary, and all personnel would know the process.

Response: SAR Chapter 8 includes guidance for the development of site-specific operating procedures to be followed for unloading the TSC and includes consideration of the radioactive gases purged from the canister. The canister to be unloaded will be flushed with nitrogen gas to remove any accumulated radioactive gases prior to initiating fuel cooldown. The amount of radioactive gases displaced by the nitrogen gas is first assessed by sampling to determine the appropriate radiological controls. Any radioactive gaseous effluent released from the canister would be processed through High-Efficiency Particulate Air (HEPA) filters and any additional filtration systems a facility may have in order to filter the air from a fuel handling building or reactor building. All radioactive effluents released to the environment must meet Federal and State regulations.

Comment B–3: One commenter asked if the high peak dose rates could be reduced in some way for the transfer cask top during shield lid welding, the top of the transfer cask containing a sealed canister filled with Boiling Water Reactor (BWR) fuel, and the bottom of the transfer cask with a canister filled with Pressurized Water Reactor (PWR) fuel.

Response: The high peak dose rates are based upon loading the design basis fuel and present the worst case scenario for estimating doses to workers. The actual doses received by workers should be less than the calculated doses because the actual fuel loaded may have a longer cooling time and a different, lower burnup. Under the facility's as low as reasonably achievable (ALARA) does exposure program, the licensee will have to evaluate ways to reduce the dose to those who will be working with the cask. For example, temporary shielding could be used to reduce dose to workers.

Comment B–4: Three commenters noted that the Completion Time for Required TS Action A.1 of Limiting Condition for Operation (LCO) 3.2.1 (Decontamination of Canister Surface Contamination) is unnecessarily restrictive. The commenters request that the Completion Time be revised to 25 days because this LCO is not time dependent.

Response: The NRC disagrees with this comment. The applicant evaluated and proposed the 7-day time frame. During the review process, the staff evaluated and found acceptable the applicant's proposal. The NRC found the 7-day completion time reasonable to decontaminate the surface if contamination on the canister or transfer cask is identified. The commenters did not provide adequate justification for revising the LCO. If there is surface contamination on the canister or transfer cask, then it is good health physics practice to decontaminate the surface as soon as practicable but within the seven day completion time.

Comment B–5: Three commenters stated that the Completion Time for Required Action A.2 of LCO 3.2.2 (Concrete Cask Average Surface Dose Rates) is unnecessarily restrictive, and request that the Completion Time be revised to 25 days.

Response: The NRC disagrees with this comment. The applicant evaluated and proposed the 7-day time frame. During the review process, the NRC evaluated and found acceptable the applicant's proposal. The NRC found the 7-day completion time reasonable to verify compliance with the regulations. The comment did not provide adequate justification for revising the LCO.

Comment B–6: Two commenters noted that the radiological dose to adjacent controlled or noncontrolled site areas is based on 20 loaded vertical storage modules (Preliminary Safety Evaluation Report [PSER] Sections 10.3 and 10.4), and that the prototypical modules are arranged in two rows with ten storage modules per row. The commenters stated this assumption is unrealistic in Independent Spent Fuel Storage Installations (ISFSIs) that support the complete decommissioning of an operating nuclear power plant where there may be 50 or more modules. The more storage modules, the greater the sky shine interaction that is available at the boundary of the site control area and the greater the onsite occupational dose. The commenters stated that the PSER does not analyze the more typical module configurations and, thus, does not meet the requirements of 10 CFR 72.236(d).

Response: NRC disagrees with this comment. This application is for a general license and therefore a generic approach has been taken in evaluating the doses to site workers and the public. Prior to a general licensee using this cask, the licensee is required to meet the conditions stated in 10 CFR 72.212. Specifically, 10 CFR 72.212(b)(2)(iii) states that the requirements in 10 CFR 72.104 (the criteria for radioactive materials in effluents and direct radiation from an ISFSI or Monitored Retrievable Storage Facility (MRS)) must be met. Therefore, to demonstrate compliance with 10 CFR 72.104, the § 72.212 evaluation will have to contain a dose evaluation for the ISFSI site that includes the actual number and arrangement of storage canisters.

Comment B–7: One commenter stated that compliance with required actions A.1 and A.2 for LCO 3.2.2 in the TS does not either restore compliance with the LCO or allow exiting the LCO. LCO 3.2.2 in the TS contains limits for the average surface dose rates of each concrete cask during loading operations. Surveillance requirement (SR) 3.2.2.1 requires that the average surface dose rates be measured once after completion of transfer of a loaded canister into the concrete cask and before beginning storage operations. Condition A and required actions A.1 and A.2 for this LCO state that if the concrete average surface dose rate limits are not met, the

licensee must administratively verify correct fuel loading, and perform analysis to verify compliance with the ISFSI offsite radiation protection requirements of 10 CFR Parts 20 and 72. However, there is no provision in this LCO to allow the loaded concrete cask to be stored in the ISFSI after actions A.1 and A.2 are completed satisfactorily. The LCO does not provide for any course of action after actions A.1 and A.2 are completed. SER Sections 5.4.3 and F5.3 state that the final determination of compliance with 10 CFR 72.104(a) is the responsibility of each applicant for a site license. Section 10.1.1 states that, as required by 10 CFR 72.212, a general licensee will be responsible for demonstrating site-specific compliance with 10 CFR part 20 and §§ 72.104 and 72.106 requirements. The intent of LCO 3.2.2 is that a licensee may store a cask that does not meet the LCO average surface dose rate limits as long as the licensee completes an analysis showing compliance with 10 CFR parts 20 and 72 limits at the ISFSI. Therefore, in order for required actions A.1 and A.2 to restore compliance with the LCO, the LCO should state: "The average surface dose rates of each Concrete Cask shall not exceed the following limits unless required actions A.1 and A.2 are met."

Response: NRC agrees with this comment. LCO 3.2.2 has been revised.

Comment B–8: One commenter asked why there is axial reflection of neutrons from one tube to another bypassing the poison panels under full or partial flooding, and how this affects analysis. The commenter stated that if the NRC does not support NAC's claim that the infinite-length approximation adds conservatism, it should be removed.

Response: Although the NRC does not concur with NAC's statement that the infinite-length model adds conservatism, removal of the statement from the SAR is not necessary because the statement does not affect the overall conclusions of the safety analysis. The axial reflection of neutrons from one tube to another occurs when neutrons leaving the end of one fuel tube are scattered into another fuel tube by water, fuel hardware, or cask materials located beyond the ends of the poison panels. This phenomenon provides a neutron pathway between assemblies that is not considered in infinite-length models of the fuel and cask. The NRC's analysis shows that the resulting small increase in the computed reactivity roughly balances the small reactivity decrease arising from axial neutron leakage, which is likewise neglected in NAC's infinite-length model. The NRC therefore views the infinite-length approximation as neutral; *i.e.*, it neither adds nor subtracts conservatism.

C. Accident Analysis

Comment C–1: One commenter noted that the thermal accident is postulated with 50 gallons of transporter fuel burning for 8 minutes and suggested that an evaluation for a possible jet crash and associated fire be performed.

Response: The NRC staff's standard review plan for dry cask storage systems, Chapter 11 "Accident Analysis," specifies that structures, systems, and components important to safety must be designed to withstand credible accidents and natural phenomena events. A cask transporter fire is considered credible for the NAC–UMS cask design, and is the basis for the 8-minute fire associated with the time it would take to burn 50 gallons of fuel. Other modes of transport causing the fire (such as airplanes, trains, and delivery trucks) are not considered plausible for this cask design and are beyond the scope of this rule. However, before using the NAC–UMS cask, the general licensee must evaluate the site to determine if the chosen site parameters are enveloped by the design bases of the approved cask as required by 10 CFR 72.212(b)(3). The licensee's site evaluation should consider the effects of nearby transportation and military activities. Also included in this evaluation is the verification that the cask handling equipment used to move the Vertical Concrete Cask (VCC) to the pad is limited to 50 gallons of fuel (as detailed in Technical Specification B 3.4.5–Site Specific Parameters and Analyses).

Comment C–2: Three commenters requested that LCO 3.1.7 (Fuel Cooldown Requirement) be deleted from the TS because there are no design basis accidents that require fuel cooldown for removal from a sealed canister. The commenters believed that the applicant demonstrated that cooldown can be performed as shown by the "Thermal Evaluation" section of NUREG–1536, "The Standard Review Plan for Dry Cask Storage Systems, January, 1997" and that if the fuel cooldown requirements cannot be removed from the TS, the cooldown requirements should be moved to the "Administrative Controls and Programs" section.

Response: The NRC agrees with the comment that the TS A 3.1.7, "Fuel Cooldown Requirements" associated with canister unloading procedures can be deleted from the TS. The NRC agrees that this would be a highly unlikely scenario that could be adequately controlled by approved site-specific operating procedures developed based on the technical basis contained in SAR Chapter 8. Reuse of the canister after unloading would not be likely. The fuel would be returned to the spent fuel pool for subsequent dry cask storage in another canister and/or transport.

Comment C–3: One commenter asked a number of questions related to the Boral panels regarding the continued efficiency over time, the number of casks that have utilized Boral, how the Boral is manufactured and tested, and whether the panels can structurally deform.

Response: Boral has been used in the nuclear industry since the 1950's and has been used in spent fuel storage and transportation cask baskets since the 1960's. Several utilities have also used Boral in spent fuel pool storage racks. Industry experience has revealed no credible mechanisms for a loss of Boral efficacy in the cask. Therefore, the NRC has reasonable assurance that the Boral panels in the PWR and BWR baskets of the TSC will perform their intended criticality function throughout the licensed storage period.

Each Boral panel is held in place by a stainless steel cover plate, that is welded around its perimeter to the outer wall of the fuel tube. As noted in SAR Section 6.1, criticality control in the PWR basket is achieved by surrounding the fuel assemblies with four panels of Boral for each fuel assembly. In the BWR basket, single panels of Boral placed between each fuel assembly are used for criticality control.

Boral will be manufactured and tested under the control and surveillance of a quality assurance and quality control program that conforms to the requirements of 10 CFR Part 72, Subpart G. A statistical sample of each manufactured lot of Boral is tested by the manufacturer using wet chemistry procedures and/or neutron attenuation techniques. The specified minimum content of the neutron poison in the Boral panels (*i.e.*, 0.025 grams of B^{10} per cm^2 for the PWR basket and 0.011 grams of B10 per cm2 for the BWR basket) is ensured by the acceptance testing procedures described in SAR Section 9.1.6.

Comment C–4: One commenter noted that the NRC had reviewed the Boral vendor's product literature and believed this should be done for all materials because most cask vendors do not review this information. The commenter stated that nonstandard Boral sheets, are an area where mistakes may be made and verifications are not performed. The commenter asked why NAC was not "up front" with the issue of using nonstandard Boral sheets.

Response: The NRC disagrees that most vendors do not review material specifications selected for use within cask designs. The vendor is responsible for implementing a quality assurance program. The NRC expects that the material used in the cask systems meets minimum design specifications. The NRC has no specific information that this or other vendors do not properly specify and confirm material properties. Furthermore, the NRC does specifically evaluate and consider the materials utilized in a proposed cask design. Regarding the use of "non-standard" Boral sheets, the vendor had already committed to obtaining a specific B^{10} loading for the neutron absorbers, both in the SAR and as stipulated in the design features section of the TS. The NRC's safety evaluation fully describes the basis for the NRC's acceptance.

Comment C–5: One commenter expressed a concern about the possible production of hydrogen from the aluminum heat transfer disks during loading and unloading operations.

Response: The NRC has considered the possible production of hydrogen in its evaluation. As noted in SAR Section 3.4.1.2.2, the applicant anticipates that no hydrogen gas is expected to be detected prior to, or during, the loading or unloading operations. However, if a reaction between the aluminum heat transfer disks and the spent fuel pool water occurs, the loading and unloading procedures of SAR Chapter 8 that include procedures to detect and remove hydrogen from the space between the shield lid and the top of the water during any welding or cutting operations, provide adequate assurance that the welders will be protected. Further, the NRC has licensed other storage casks that utilize aluminum heat transfer components.

Comment C–6: Two commenters stated that the NAC–UMS system does not provide for a capability to verify periodically whether or not the storage conditions have changed, thus requiring canning or other remedial measures for fuel that has developed further damage during storage. The commenters stated that the fuel-containing canisters may need to be opened periodically in a hot cell and visually inspected, and that an ISFSI using the NAC–UMS system may require such a facility because the canisters may not be shipped under 10 CFR Part 71 without verification of fuel rod integrity. The commenters stated that the PSER should define verification requirements for the NAC–UMS system prior to shipment under Part 71 and evaluate the applicant's verification methods.

Response: The NRC disagrees with the comment. The NRC, with the issuance of Interim Staff Guidance (ISG) No. 1, "Damaged Fuel" addressed the definition of damaged fuel and clarified the fuel conditions for which spent fuel should be placed in cans prior to storage for the purposes of retrievability. The NAC–UMS storage cask application, as considered in this rulemaking, did not seek approval for the storage of damaged fuel as defined in ISG–1. Additionally, both the design of the NAC–UMS system and the thermal, structural, and criticality analyses ensure that the fuel will not be disrupted under normal, off-normal and accident conditions once undamaged, or intact, fuel is placed into a storage canister. Further, the results of a cask demonstration program at Idaho National Engineering and Environmental Laboratory (INEEL) (where determinations were made of the effects of dry storage casks on spent fuel integrity) showed that there were no significant fuel failures that would require extraordinary handling of the fuel. Therefore, the NRC staff has reasonable assurance that the spent fuel is adequately protected against degradation that might otherwise lead to gross rupture during storage. As such, periodic verification of cladding conditions during the storage period or prior to transportation is not warranted.

Regarding requirements associated with the safe transportation of spent fuel under 10 CFR Part 71, it is appropriate to establish the necessary conditions that ensure the health and safety of the public under the conditions of the 10 CFR Part 71 CoC. A 10 CFR Part 72 storage cask design certification does not serve to authorize the shipment of the stored contents under 10 CFR Part 71. NRC does an independent evaluation of casks for shipping under 10 CFR Part 71. Similarly, conditions of any approval under 10 CFR Part 71 are independent of necessary conclusions pertaining to a cask design's capability to meet the requirements of 10 CFR Part 72 for storage.

Comment C–7: Two commenters raised concerns about the radiation hardening of borated neutron absorber materials, including the NS-4-FR neutron shield employed in the NAC–UMS storage cask. The commenters stated there is no evidence and no analysis in the PSER to establish NS-4-FR's ability to maintain form over the expected lifetime integrated neutron flux.

Response: The NRC has reasonable assurance that NS-4-FR will maintain its form over the expected lifetime integrated gamma and neutron doses. Independent laboratory tests of the NS-4-FR material have demonstrated that radiation exposures significantly higher than those of any neutron shield component of the NAC–UMS system have not resulted in any physical deterioration of the neutron shield material. Calculations have shown that over 500 continuous years of exposure to a design basis neutron source would have to occur before the transfer cask shield neutron exposure would reach the level of the laboratory tests. Similarly, over 50 years of continuous design basis gamma exposure would be required before the laboratory test exposure levels were reached. In actuality, the exposures would need to be considerably longer with spent fuel due to the continually declining source term.

The NS-4-FR neutron shield material is used as a neutron shield in the transfer cask and the Vertical Concrete Cask (VCC) shield plug. It is not used in the storage cask. In the transfer cask, the amount of time this material will experience significant neutron fluxes is minuscule compared to the amount of time to cause radiation embrittlement of the material. In the VCC shield plug, the NS-4-FR material is placed above the canister lid and is exposed to significantly lower neutron fluxes than seen by the transfer cask.

Further, for both the transfer cask and the VCC shield plug, the NS-4-FR neutron shield is completely enclosed within welded steel components. In the transfer cask, the top and bottom plates are seam welded to the shell with full penetration or fillet welds to enclose the NS-4-FR material. Similarly, the NS-4-FR in the VCC shield plug, is enclosed between the shield plug, a retaining ring and a cover plate using fillet welds. Since the NS-4-FR is sandwiched between these various steel shells for the transfer cask and VCC shield plug, the NRC has reasonable assurance that the NS-4-FR material will maintain its form over the expected lifetime of the transfer cask's or shield plugs radiation exposures. Even if the material were to become embrittled, its placement within the VCC shield plug and transfer cask components would not allow the material to redistribute.

Comment C–8: One commenter stated that eight supply and two discharge lines in the transfer cask wall adds to confusion and mistakes, and that introducing forced air to cool the contents and allow the canister to remain longer in the transfer cask is asking for trouble because workers bank on the time being available.

Response: The NRC disagrees with the comment. The number of supply and discharge lines is a specific design

objective to ensure uniform cooling so the spent fuel contents in the canister remain within the design envelope during loading and unloading operations. Activities associated with the safe and proper use of the transfer cask design are to be conducted in accordance with site-specific operating procedures generated by the user. Appropriate identification and controls for the operation of the air supply and discharge lines, sufficient to minimize confusion and mistakes, are a responsibility of the general licensee. The objective of the option to provide forced air cooling to the transfer cask, although not intended to be routine, is to maintain the spent fuel contents within the design envelope at all times. If an operational situation results in the use of the forced air option, the spent fuel contents will remain under analyzed conditions, and thus the availability of this option is considered beneficial.

Comment C-9: One commenter opposed the idea of using the transfer cask if a canister must be removed from a concrete cask. The commenter asked if the intent is to use the transfer cask for storage if there are problems and why.

Response: The NRC evaluated and accepted the use of the transfer cask if a canister must be removed from a concrete cask, including unloading operations. The transfer cask is not an authorized configuration for long-term storage. The use of the transfer cask for loading and unloading operations is controlled by the TSs.

Comment C-10: One commenter asked that preferential loading and administrative control of fuel assemblies not be allowed to leave a wide safety margin to protect the public.

Response: The NRC disagrees with the comment. The NRC's safety evaluation determines with reasonable assurance that an adequate (rather than "wide") safety margin is ensured with respect to all cask activities. The proper selection and loading of candidate spent fuel assemblies necessarily relies on appropriate administrative controls. All 10 CFR Part 50 licensees that will use this cask design under the general license have extensive experience in selecting uniquely identified fuel assemblies for placement in uniquely identified locations, such as the reactor core or the spent fuel pool. Preferential loading specifications, in conjunction with the appropriate administrative loading controls, have been accepted by the NRC because they maintain an adequate safety margin and rely on similar existing administrative controls for safe fuel handling.

Comment C-11: Three commenters requested the removal of the inference in Chapter 10 of the SAR that a daily inspection of the VCC vents is an expected or routine activity. The commenters stated that identification of blocked VCC vents is accomplished by use of the temperature monitoring systems, and that physical inspection of the VCC vents, especially daily, results in unnecessary exposure and is not in keeping with preferred As Low As Reasonably Achievable (ALARA) practices.

Response: NRC disagrees with this comment. The cask user is required to verify the operability of the heat removal system by monitoring temperature instrumentation daily, as specified in TS A.3.1.6. As stated in SAR section 1.2.1.5.9, the temperature monitoring system can be read at a display device located on the outside surface of the cask or at a remote readout location. A daily inspection of the VCC vents is included in Chapter 10 of the SAR as an expected routine operation in determining a conservative, estimated annual dose due to routine operations as per ALARA practices. Whether to use a temperature monitoring system with a display on the outside of the casks or to use remote readout instrumentation is left to the cask user's discretion.

Comment C-12: Two commenters stated that the operator testing and training exercises described in CoC Section A5.0 do not require training in the importance of sequence, and commented that the CoC implies that training will be conducted solely on the activity basis, and thus, the planned training loses the importance of the various interface requirements between activities that follow each other. This omission permits operator mistakes at activity intersections and may contribute to missing parameter values or conditions that must be met for safe loading and transfer of the assembly canister from the spent fuel pool to the storage cask. The commenters stated that individual procedures should include stated preconditions that must be satisfied by the previous sequential procedure and are necessary for safely performing the subsequent activity, and that without these procedures, the application does not satisfy the requirements of 10 CFR 72.236(l).

Response: The NRC disagrees with the comment. The Administrative Controls and Programs section of the TS stipulates that the training program for the NAC-UMS system must be developed under the general licensee's systematic approach to training (SAT). The training modules must include comprehensive instructions for the operation and maintenance of the NAC-UMS System. The TS provides a detailed listing of the preoperational tests and training exercises that must be performed prior to the first use of the system to load spent fuel assemblies. Although the TS specifically recognizes that dry runs may be performed in an alternate step sequence from the actual procedures, it is the general licensee's responsibility under the SAT to establish and execute an effective preoperational testing and training program. With respect to the contents of individual procedures, Condition No. 2 of the CoC specifies that the user's written site-specific operating procedures must be consistent with the technical basis described in Chapter 8 of the SAR. The preparation of written site-specific operating procedures that contain adequate and appropriate initial conditions, prerequisites, and verifications, is not necessary prior to this rulemaking to add the NAC-UMS cask design to the list of approved storage cask designs of 10 CFR 72.214.

Comment C-13: One commenter asked why the speed of a vertical tornado-driven missile is assumed to be only 70 percent of the speed of a horizontal missile.

Response: The primary wind velocities associated with tornadoes are in the horizontal direction, and thus wind velocities in the vertical direction are considered to be less as stated in NRC review guidance. Specifically, the NUREG-0800, Section 3.5.1.4, review guidance describes the basis for the assumption that the maximum speed of a vertical tornado-driven missile, at 88.2 mph, is specified as 70 percent of a horizontal missile, at 126 mph. This vertical speed is enveloped by the horizontal missile speed of 126 mph considered conservatively in the SAR evaluation of the 1½ inch-thick VCC closure plate, that can only be hit by a vertical missile. The SAR has satisfactorily demonstrated that the VCC closure plate is adequate to withstand local impingement of a tornado missile traveling at the higher horizontal speed, *e.g.*, 126 mph.

Comment C-14: One commenter remarked that the transfer cask gets highly irradiated and exposed to high temperatures and contamination through repeated use and asked what happens to the transfer cask over time, especially the welds. The commenter stated that the trunnion area welds need inspection over time for possible leakage of pool water inside the transfer cask walls. The commenter stated that transfer casks for all cask designs need specific criteria for examination

periodically and that maybe the transfer casks are too neglected in NRC thinking. The commenter also asked what happens if water gets inside the walls starting chemical reactions and adding unaccounted for weight in lifts, and what are the requirements for transfer cask testing or checking over time.

Response: The NRC agrees that the transfer cask will be subject to hostile environmental conditions such as high radiation, temperature, and contamination through repeated use. In SAR Section 9, NAC has committed to a transfer cask maintenance program to inspect the transfer cask trunnions and shield door assemblies for gross damage and proper function for each use. Annually, the lifting trunnions, shield doors, and shield door rails must be either dye penetrant or magnetic particle examined. The SAR states that the examination method must be in accordance with Section V of the ASME Code and the acceptance criteria Section III, Section NF, NF–5350, or NF5340, as required by ANSI N14.6. Therefore, the transfer cask, including trunnion welds, is examined periodically to ensure that it will function as designed over its entire service life. This provides reasonable assurance, supplemented by inspections prior to use that water will not get inside the wall to result in potential chemical reactions or unaccounted weight in lifts.

Comment C–15: One commenter stated that if berms or shield walls are to be used for radiological protection, an evaluation of tornado missiles that could be generated as a result of their constituent materials should be performed.

Response: The NRC agrees with the comment. Use of berms or shield walls for radiological protection is a site-specific consideration that is to be evaluated by the general licensee under 10 CFR 72.212 to ensure that the reactor sites parameters, including analyses of tornado missiles that could be generated due to the material constituency of any berms or shield walls, are enveloped by the cask design bases.

Comment C–16: One commenter stated that explosion needs more evaluation, noting that where there is hydrogen, there can be an explosion.

Response: The NRC disagrees with the comment. The NRC staff has found reasonable assurance that the possible generation of hydrogen due to cask loading and unloading operations has been evaluated, and that adequate controls are in place to detect and take corrective actions if significant quantities of combustible gases are generated. SAR Subsection 11.2.5 (explosion accident analysis under storage conditions) evaluates the NAC–UMS system subject to an external pressure up to 22 psig, has been accepted by the NRC staff, and provides part of the technical basis for site parameters evaluations performed in accordance with 10 CFR 72.212(b)(3). Further evaluation of the possible effects of an explosion involving hydrogen or other combustible materials under storage conditions is site-specific and beyond the scope of this rulemaking.

Comment C–17: Three commenters stated that the parameters provided in B 3.4(6) of the Approved Contents and Design Features in Appendix B of CoC 1015 are not relevant to the drop accident condition and are not relevant to the tip-over provided that the allowable seismic accelerations are not exceeded (*i.e.*, the cask does not tip over). As a result, the commenters request that Item 6 be revised to read: "In addition to the requirements of 10 CFR 72.212(b)(2)(ii), the seismic acceleration at the top surface of the ISFSI pad cannot exceed the value provided in B 3.4 (3)."

Response: The NRC agrees in part with the comment in that the parameters are not relevant to the SAR Subsection 11.2.4.3 VCC 24-inch vertical drop accident. These parameters have been removed from the TS as suggested. However, the same set of site concrete pad and soil parameters relevant to the tip-over analysis is being summarized in SAR Subsection 11.2.12 to ensure that the bounding side drop decelerations determined for the NAC-UMS system are available for site specific application without the need for going through additional cask tip-over analysis.

Comment C–18: Two commenters stated the heavy load lifting ability of the transfer and storage systems (described in PSER Section 3.2.3) appears to be inadequately supported and that the systems are not redundant for either attachment or lift capability, and therefore, do not satisfy the requirements for single failure of the lifting equipment. The commenters also stated that the transfer cask trunnions and storage cask lifting lugs are not redundant and do not satisfy the requirements for single failure or the requirements of 10 CFR 72.236(h).

Response: The NRC disagrees with the comment on the adequacy of SAR evaluation for heavy load lifting abilities of the VCC lifting lugs and transfer cask trunnions.

As noted in SER Subsection 3.2.3.4, the SAR demonstrates structural acceptance of the VCC components for the top lift operation in accordance with ANSI N14.6. The basic design stress factors of 3 and 5 against materials yield (S_y) and ultimate (S_u) strengths, respectively, are met with the allowable stress the lesser of $S_y/3$ or $S_u/5$. The commenters were correct that the VCC lifting lugs do not meet the single-failure-proof lifting provision because the lifting lugs provide a single-load path. However, the SAR Subsection 11.2.4 VCC drop analysis is consistent with the assumption of non-single failure proof lifting lugs. Also, the VCC lift lugs do not need to be single failure proof because of accident analysis and administrative controls. The applicant's evaluation of a possible 24-inch vertical drop (limited by controls to a lift height of 24 inches or less) of the VCC was shown to have no significant radiological consequences, and has been accepted by the NRC staff.

On transfer cask trunnions, SER Subsection 3.2.3.1 recognizes that, for a two-trunnion lifting configuration, the maximum trunnion bending stress corresponds to the stress design factors of 9.4 and 20.7 that are larger than the required factors of 6 and 10 against the material yield and ultimate strengths, respectively. Therefore, the structural capability of the trunnions satisfies the ANSI N14.6, Section 7.1, requirements for lifting critical loads with either a dual-load path handling system (with the basic design stress factors of 3 and 5 against materials yield and ultimate strengths, respectively), or a single-load path system with increased design stress factors that double the basic design stress factors.

Comment C–19: Two commenters stated that the criticality analysis as discussed in the PSER Section 6.4 does not provide a listing of the fissile material in the spent fuel assemblies, without which the analysis is questionable and does not satisfy the requirements of 10 CFR 72.236(c). Of particular concern is the concentration of Pu-239 which continues to undergo spontaneous fission and therefore, increased neutron flux.

Response: The NRC disagrees with the comment. The criticality analysis uses the conservative assumption of fresh fuel without burnable poisons. The analyzed fresh-fuel composition is always more reactive than the actual composition of irradiated fuel. Consistent with the fresh-fuel assumption, the criticality analysis lists only the fissile materials present in fresh fuel. Results of the analysis clearly demonstrate compliance with 10 CFR 72.236(c), the requirement that the spent fuel be maintained in a subcritical condition. The NRC notes that the neutron flux arising from spontaneous

fission or other fixed neutron sources in the cask has no bearing on the neutron multiplication factor, k_{eff}. Furthermore, as shown in the shielding analysis, the neutron flux in stored spent fuel arises mainly from the spontaneous fission of Cm-242 and Cm-244. Spontaneous fission of Pu-239 contributes very little to the neutron flux in spent fuel.

D. Design

Comment D–1: One commenter expressed concern about icicles forming and covering the cask vent holes. The commenter stated that more study is needed for full cask array monitoring and cleaning in an ice storm, and that plans should be made for this situation.

Response: TS A.3.1.6, "Concrete Cask Heat Removal System" requires that the cask user perform daily surveillance to verify the cask outlet temperature. The method of performing the daily check is a site-specific consideration of the cask user. If the daily temperature surveillance indicates a temperature outside of the acceptable range, then an inspection must be performed within 4 hours to verify that the inlets and outlets are not blocked or obstructed.

Comment D–2: One commenter did not share the NRC's reasonable assurance that cladding will be protected in unloading because it has never really been tried and tested. The commenter stated that this testing needs to be performed on cladding material and that the commenter has been requesting the NRC to prove the cladding integrity for years.

Response: The NRC disagrees with the comment. The NAC–UMS storage cask system design has been reviewed by the NRC. The basis of the safety review and findings are identified in the SER and CoC. Testing is normally required when the analytic methods have not been validated or assured to be appropriate and/or conservative. In place of testing, the NRC finds acceptable analytic conclusions that are based on sound engineering methods and practices. The NRC has reviewed the analyses performed by NAC and found them acceptable. However, as part of an ongoing cooperative research effort (NRC, DOE, and EPRI) regarding long-term performance of spent fuel storage, one spent fuel storage cask has been unloaded and inspected at INEEL in Idaho. Results to date are quite reassuring that the behavior of the casks and fuel assemblies is as expected.

Comment D–3: One commenter asked what is the purpose of adding solar heat to the outer cask surface and averaging over a 12-hour period for the air flow and concrete cask model. The commenter also stated that reducing the view factor when analyzing thermal interaction among casks in an array, as was done for this design, should be done for all cask designs.

Response: The purpose of adding insolation to the air flow and concrete cask model is to include the effect of solar heat on the cask that would heat the outer surface of the concrete cask and reduce heat removal from the canister through the concrete. The amount of solar heat is determined from 10 CFR Part 71 and may be averaged over a 24-hour period per the guidance provided in NUREG–1536, the Standard Review Plan for Dry Cask Storage Systems. The comment that other cask designs should similarly reduce the view factor to compensate for an array arrangement is outside the scope of this NAC–UMS rule.

Comment D–4: Three commenters requested that the language in B 2.1.2 of the "Approved Contents and Design Features" addressing preferential loading and center position loading of shortest cooled fuel be revised as follows:

- The last two sentences of the first paragraph of this section should be deleted.
- The second paragraph should be revised to delete reference to the "basket interior," which is described as the "basket center positions" in the previous paragraph.
- The third paragraph should be moved prior to the current first paragraph.
- The first sentence of the current second paragraph should be made a separate paragraph, as it is not related to the text that follows.

Response: The NRC has no objection to editing Section B2.1.2 as suggested, because it does not change the loading configuration or the means of accomplishing preferential loading. The specification has been revised consistent with the comment.

Comment D–5: One commenter noted that SER Section 1.1.1 does not specify the material of the tie rods of the BWR basket. The commenter asked why the change in materials to carbon steel for the BWR basket disks were made, necessitating the electroless nickel coating to protect from corrosion. The commenter also asked several other questions about the nickel coating including the criteria for applying the coating; how the coating is checked to ensure it is properly applied; how the coating is checked for long term storage and unloading pressures, stresses, and temperatures; if the NRC has checked the manufacturer's sheets for the coating; and if the BWR support disk coating has been evaluated for material reactions.

Response: The tie rods of the PWR and BWR baskets are fabricated with ASME SA–479 Type 304 stainless steel. The applicant chose carbon steel as the BWR support disk material because it has higher allowable stresses and load carrying capability.

The BWR support disks are coated with electroless nickel in accordance with American Society for Testing and Materials (ASTM) Specification B733–1997 (SC3, Type V, Class 1). The drawings specify the application in accordance with the ASTM specification, and the ASTM specification includes criteria to ensure proper application. All fabrication activities are to be carried out under a quality assurance program that meets the requirements of 10 CFR Part 72. As noted in SAR Section 3.4.1.2.4, the applicant demonstrated that the nickel coating is not expected to react with the spent fuel pool water during loading or unloading operations such that unsafe levels of flammable gas are produced. In the event flammable gases are produced from chemical or galvanic reactions, the procedures of SAR Sections 8.1 and 8.3, which specify that the cask user monitor the concentration of hydrogen gas during welding or cutting operations on the shield lid welds, ensure that accumulation of flammable gases is negligible and that workers are protected. Therefore, the NRC has reasonable assurance that the BWR support disk coating will not react with the spent fuel pool water during loading and unloading to produce unsafe levels of flammable gases.

Comment D–6: Two commenters stated that neither the PSER nor the PSAR explain how consolidated fuel assemblies that have been canned will maintain confinement in the NAC–UMS system. They also note that the process of conselidation is expected to produce broken/damaged rods and that the screens will not confine the powder form (U_3O_8) of the fuel.

Response: This comment is beyond the scope of this rule. For this rulemaking, the NAC–UMS storage system SAR only considers the storage of intact spent fuel that meets the limits as specified in the TS.

Comment D–7: One commenter questioned the design and performance of the transfer cask extension and asked if it had been evaluated in relation to all evaluations for the TSC itself. The commenter asked if there is any possibility that the active fuel region could be pulled up into the extension area of the transfer cask and if all risks

associated with use of the extension have been evaluated.

Response: The extension for the transfer cask is needed to provide gamma shielding to the workers while the transfer cask is being moved from the spent fuel pool to the VCC. The extension provides gamma shielding when the overall height of a standard fuel assembly has been increased due to the insertion of a control assembly. Because there is no neutron source associated with the control assembly, the NS-4-FR neutron shield is not needed. Because of the distribution of the active fuel region of a fuel assembly and the configuration of the transfer cask, the possibility of the active fuel region being pulled up into the extension is improbable.

The structural performance of the bolts that attach the transfer cask extension to the PWR Class 2 transfer cask has been evaluated in SAR Subsection 3.4.3.3.4 for inadvertent TSC lifting against the retaining ring. Subsection 3.2.3.1 of the SER evaluates transfer cask load bearing components, including the transfer cask extension, and concludes that they are structurally acceptable.

Comment D–8: Three commenters stated that a number of the NAC–UMS license drawings require some minor revisions, citing that the initial fabrication processes for the NAC–UMS have identified the need for additional clarifications and corrections to address editorial omissions for some of the current license drawings. The commenters noted that the requested revisions do not constitute design changes to the components or require revision of the existing SAR text or supporting evaluations. The commenters also stated that the incorporation of the requested revisions will significantly enhance the fabrication inspection process and allow authorized users of the NAC–UMS System to fabricate the components without processing 10 CFR 72.48 evaluations for minor variations with the current license drawings. The commenters' comments relate specifically to the following drawings: 790–559, 790–560, 790–561, 790–562, 790–563, 790–564, 790–570, 790–575, 790–581, 790–582, 790–583, 790–584, 790–585, 790–595, and 790–605.

Response: The NRC agrees, with the exception of the addition of NS–3 as a neutron shield material in the VCC shield plug, that the additional clarifications and corrections to address editorial omissions on the drawings do not constitute design changes to the components or require revisions to SAR text or the NRC's CoC, TS, or SER. The characteristics and evaluation of the use of NS–3 neutron shielding material have not been provided in the SAR; thus the NRC considers this aspect to be a design change. The NRC considers enhancements to the fabrication inspection process as a result of the drawing changes beneficial to all stakeholders.

Comment D–9: Three commenters requested that B.2.2.3 of the Approved Contents and Design Features be revised to indicate the phrase "or demonstrate" between the (existing) words "restore" and "compliance."

Response: The NRC agrees with the proposed clarification of the TS, and it has been revised accordingly.

Comment D–10: Three commenters requested that the following additional note be added to both Tables B2–2 and B2–4 of the Approved Contents and Design Features: "Parameters shown are nominal pre-irradiation values."

Response: The NRC agrees with the proposed clarification of the TS, and it has been revised accordingly.

Comment D–11: One commenter noted that a 24-inch drop would result in permanent deformation of the air inlets of the TSC pedestal and loss of part of the inlets. The commenter did not believe that the pedestal should be part of the inlets.

Response: The NRC disagrees with the comment. The air inlets are an integral part of the pedestal or base weldment. The base weldment, that supports the TSC is expected to undergo yielding and partial collapse in a 24-inch drop of the VCC. SAR Subsection 11.2.4 presents the finite element analysis for calculating a bounding TSC deceleration and corresponding VCC base weldment deformation, that have been evaluated in SER Subsection 3.3.5.2. The NRC agrees with the SAR assessment that the 1-inch deformation of the air inlets is small compared to the 12-inch height of the air inlet because the effect of this deformation is bounded by the blockage of half of the air inlets evaluated in SAR Subsection 11.1.2 for satisfying the radiological dose limits of 10 CFR 72.102(a). It is important to note that although the accident evaluation for the concrete cask 24-inch drop has determined that the cask will remain functional and that there would be no radiological impact from the event, a full evaluation and corrective action of such an event's effects on cask performance, such as replacing the damaged VCC, would be performed according to the cask users corrective action and quality assurance processes.

Comment D–12: Three commenters requested that B 3.5.2.1 (4) of the Approved Contents and Design Features be revised to read: "The CHF design shall incorporate an impact limiter for CANISTER lifting and movement if a qualified single failure proof crane is not used."

Response: The NRC agrees with the comment. B 3.5.2.1 (4) has been revised as suggested.

Comment D–13: Three commenters agreed that the following parameter definition clarifications are needed to Table B3–2 of the Approved Contents and Design Features: "D" should be revised to read "Crane hook dead load" and "D*" should be revised to read "Apparent crane hook dead load".

Response: The NRC agrees with the comment. Table B3–2 has been revised as suggested.

Comment D–14: Two commenters stated that the process of placing the spent fuel in the canister is not adequately justified as required by 10 CFR 72.236(l). The industry consensus standard, ANSI/ANS–57.1, "Design Requirements for Light Water Reactor Fuel Handling Systems" requires a translation inhibit for the spent fuel handling equipment. The commenters commented that although the standard permits an allowed bypass for this interlock, the bypass is limited to a jogging function. The NAC–UMS procedures do not make it clear that installed bypasses must be performed step-by-step as required by the standard, not in a continuous motion. The commenters stated that the handling equipment of a plant applying for approval to load dry storage canisters should be checked for continuous translation bypass in sensitive areas to eliminate the potential for a major radioactive dispersal accident.

Response: This comment is beyond the scope of this rule. Safe fuel handling practices at reactor sites, including cask loading and unloading operations, are the responsibility of the 10 CFR Part 50 licensee. Section 72.212 requires general licensees to determine if activities related to the storage of spent fuel involve any unreviewed safety question or change in the facility TS. The general licensee's evaluations and spent fuel handling practices are subject to regulatory oversight by the NRC's inspection process.

Comment D–15: One commenter was concerned that a fuel assembly with too short bottom hardware can extend below the bottom of the poison panels, and asked if requiring a minimum length of bottom hardware will prevent this extension and if workers will measure it correctly. The commenter thought it would be safer to have longer poison panels and asked if cost-cutting is a factor.

Response: Requiring a minimum length of bottom fuel hardware will indeed prevent the bottom of the active fuel from extending below the bottom of the poison panels under normal and accident conditions. The length of a fuel assembly's bottom hardware is usually known from the fuel design drawings or other fuel records. When this is not the case, the NRC sees no significant difficulties in the use of simple in-pool measurements (e.g., with a video camera and ruler) to adequately determine the bottom hardware dimensions. Because the required minimum length of fuel bottom hardware and spacer effectively precludes unanalyzed configurations of the fuel and poison, the NRC finds no basis for requiring NAC to use longer poison panels. The NRC has not considered cost factors in concluding that the cask design complies with the applicable safety regulations.

E. Welds

Comment E-1. One commenter asked why partial penetration welds should be acceptable for the shield and structural lids. The commenter does not consider the closure redundant if the shield lid cannot be ultrasonically tested and stated that the structural lid needs a full penetration weld with ultrasonic testing because this area is crucial.

Response: The NRC accepts the closure weld's configuration and examination in accordance with Interim Staff Guidance-4, Revision 1 that allows the use of a partial penetration closure weld and a multi-layer (i.e. progressive) liquid penetrant (PT) surface examination in lieu of a volumetric examination. Furthermore, ASME Code Case N-595-2, "Requirements for Spent Fuel Storage Canisters" permits partial penetration welds for end closures using two cover plates and liquid penetrant examination of the weld.

Comment E-2: One commenter was concerned about the pedestal weldment, stated that one inch may make a big difference in deformation, and asked if all possible problems have been examined.

Response: The pedestal weldment that supports the TSC, is expected to undergo yielding and partial collapse in a 24-inch drop of the VCC. SAR Subsection 11.2.4 presents a finite element analysis for calculating a bounding TSC deceleration and corresponding pedestal air inlets deformation that has been evaluated in SER Subsection 3.3.5.2. The NRC agrees with the SAR assessment that the 1-inch deformation is small compared to the 12-inch height of the air inlet. Also, the effect of this deformation is bounded by that of the blockage of half of the air inlets that has been evaluated in SER Subsection 11.1.2 for satisfying the radiological dose limits of 10 CFR 72.102(a). See also related response D-11.

F. Structural Evaluation

Comment F-1: One commenter asked why the pedestal plate and cask base plate are carbon steel and not stainless steel. The commenter asked for an explanation of the pedestal plate: how it is used, for what purpose, what shape it is, can it rust to the cask bottom plate and the canister bottom plate creating a problem in pulling out the canister, why is it not ceramic, why the VSC-24 necessitated ceramic tiles, and what it does long term in storage.

Response: As depicted in SAR Figure 11.2.4-1 and Drawing 790-561, the pedestal or weldment plate is a 2-inch thick, 67.5-inch diameter, horizontal circular carbon steel plate. It provides a direct bearing surface to the TSC for transmitting gravity and impact vertical loads, through the vertical ring and inner cone baffle weldments, to the VCC support pad. Detail B-B of SAR Drawing 790-560 shows that a ¼-inch thick stainless steel plate is installed between the TSC bottom and the pedestal plate. The stainless steel plate isolates the TSC from the VCC carbon steel base plate. This configuration will prevent the carbon steel pedestal plate from rusting to the stainless steel TSC canister bottom. Therefore, no adherence force will develop to cause any shifting, deforming, or cracking of the pedestal plate in handling, as suggested.

Analysis of the VSC-24 cask design is beyond the scope of this rule.

Comment F-2: Two commenters noted that although the PSER structural analysis (Sections 3.1 and 3.4) discusses three types of tornado-generated missiles, there is no analysis of a terrorist attack in the form of a fired missile. Foreign regulatory agencies are now requiring such an analysis. The commenters commented that the need for the analysis is driven further by a common location of the ISFSIs near international waters and that the recent introduction of high penetrating depleted uranium missile shells adds to the concern of a terrorist event. The commenters stated that an analysis of the vulnerability of an ISFSI to such an attack may identify the need for sturdier storage module surfaces, an expanded site security area, or a storage enclosure, and that without such an analysis, the application does not satisfy the requirements of 10 CFR 72.236(l).

Response: The NRC disagrees with the comment. The NRC reviewed potential issues related to possible radiological sabotage of storage casks at reactor site ISFSIs in the 1990 rulemaking that added Subparts K and L to 10 CFR Part 72 (55 FR 29181; July 18,1990). The NRC regulations in 10 CFR Part 72 establish physical protection requirements for an ISFSI located within the owner-controlled area of a licensed power reactor site. Spent fuel in the ISFSI is required to be protected against radiological sabotage using provisions and requirements as specified in 10 CFR 72.212(b)(5). Further, specific performance criteria are specified in 10 CFR Part 73. Each utility licensed to have an ISFSI at its reactor site is required to develop physical protection plans and install systems that provide high assurance against unauthorized activities that could constitute an unreasonable risk to the public health and safety.

The physical protection systems at an ISFSI and its associated reactor are similar in design features to ensure the detection and assessment of unauthorized activities. Alarm annunciations at the general license ISFSI are monitored by the alarm stations at the reactor site. Response to intrusion alarms is required. Each ISFSI is periodically inspected by the NRC. The licensee conducts periodic patrols and surveillances to ensure that the physical protection systems are operating within their design limits. It is the ISFSI licensee who is responsible for protecting spent fuel in the casks from sabotage rather than the certificate holder. Therefore, the commenter's interpretation of 10 CFR 72.236(l) as requiring the cask design to be analyzed for specific forms of terrorist attacks is beyond the scope of this rule.

Comment F-3: One commenter noted that the NAC-MPC VCC weighs 155,000 pounds and that the NAC-UMS VCC weighs between 221,000 and 238,000 pounds empty, and asked if this weight has been evaluated for all systems. The commenter also asked why the UMS wall is 7 inches thicker than the MPC and the carbon steel liner thickness is 1 inch less in the UMS than in the MPC, suggesting that more concrete and less steel was used to cut costs.

Response: The weights for five classes of VCC listed in SAR Table 1.2-5 have been considered to establish bounding values for evaluating structural performance of the NAC-UMS system. The design for the thickness of the concrete wall and its liner plate for different storage cask systems is NAC's choice to meet various cask performance objectives such as protection from tornado missiles and radiation shielding and heat rejection. The design has been

evaluated in the SAR and found acceptable by the NRC.

Comment F–4: One commenter asked why in Section 3.1.1.3 of the SER the transfer cask extension is identified as "low alloy steel" instead of "carbon steel."

Response: The NRC recognizes that the transfer cask extension is fabricated with the ASTM A516, Grade 70, carbon steel, per SAR Drawing 790–560. Accordingly, SER Subsection 3.1.1.3 is revised to read: "The transfer cask extension is a carbon steel ring designed to be bolted to the transfer cask."

Comment F–5: Three commenters noted that either plate or forging material specified in ASME SA240 or ASME SA 182 should be permitted for both the shield lid and structural lid of the TSC. The commenters stated that only minor differences exist between the properties of each material and that these differences do not affect the performance of the components in the NAC–UMS System.

Response: The NRC agrees with the comment. NAC has noted in SAR Section 3.4.4.1.11 that the forged material is required to have ultimate and yield strengths that are equal to or greater than the plate material. This ensures that the critical flaw size determination is applicable to both the SA–240 and SA–182 materials. SAR Drawing 790–584 has been revised to permit the use of ASME SA182 as an alternate to SA240 for both the shield and structural lids of the TSC.

G. Thermal Evaluation

Comment G–1: One commenter asked how the NRC can assure the public that determination of the design basis decay heat load was done properly and who checks this determination.

Response: The design basis heat load is determined by the applicant, supported by their calculations, loaded in accordance with their procedures, and demonstrated to be in compliance with the design by TS surveillance measurements of the cask air inlet and air outlet temperatures. The NRC reviewed the SAR to provide assurance that the thermal design meets the regulations and performs as intended. The NRC, as stated in Section 4.3 of the SER, confirmed through analysis a sample of the decay heat loads identified in the SAR and verified through independent analysis that the design bases heat load is bounding. The NRC has concluded that the design bases heat load was determined properly. The user has the responsibility to load the canister in accordance with site-specific operating procedures that reflect the TS limits, including those limits imposed on heat load.

Comment G–2: One commenter considered the fuel cladding temperature increase and reduction in normal temperature margin to be quite large when a sensitivity analysis was performed on fabrication tolerances on gap size between the support/heat transfer disks and the canister shell. The commenter asked if the fabrication tolerances can be tightened.

Response: The NRC evaluated the effect of fabrication tolerances and has determined that the consequences are acceptable. Further "tightening" of tolerances may hinder fabrication of the canister/basket assembly and possibly adversely effect spent fuel loading and unloading operations.

Comment G–3: Three commenters requested that the language of LCO 3.1.1 (Canister Maximum Time in Vacuum Drying) with respect to "in-pool cooling" be clarified to not restrict this cooling to only the spent fuel pool. The commenters noted that in some plant configurations, the use of the cask loading area or area other than the fuel pool may be desirable for providing cooling. The commenters also request that the second frequency for both surveillance requirement 3.1.1.1 and surveillance requirement 3.1.1.2 be revised to read: "as required to meet the Limiting Condition for Operation (LCO) time limits."

Response: The NRC disagrees with the comment. Insufficient information has been provided to describe the alternative to in-pool cooling. Spent fuel pools are maintained in a specific temperature range whereas the proposed alternative appears not to be limited in either temperature or configuration. Currently, more than one cooling method is provided because the referenced LCO 3.1.1 does allow forced air cooling as an alternative to in-pool cooling. Adding "as required to meet Limiting Condition for Operation (LCO) time limits" to the second frequency of surveillance requirement (SR) 3.1.1.1 and SR 3.1.1.2 more clearly identifies the required time intervals, is acceptable to the NRC staff, and has been revised accordingly.

Comment G–4: Three commenters stated that under LCO 3.1.6 (Concrete Cask Heat Removal System), SR 3.1.6.2 should be deleted. The commenters noted that this surveillance is already required under A 5.4, "Administrative Controls and Programs" and that A 5.4 should be revised to clearly state for which off-normal, accident, or natural phenomena events the surveillance should be performed. The commenters stated that reference to Chapter 11 of the SAR, NUREG–1536, or 10 CFR 72.24 and 72.122 would identify events that would require surveillance.

Response: The NRC agrees with the comment to delete SR 3.1.6.2 because Administrative Control A 5.4 ensures that the ISFSI will be inspected within 4 hours of an off-normal, accident, or natural phenomena event to ensure that at least half of the air inlets and outlets on each concrete cask are free of blockage within 24 hours. Also, SR 3.1.6.1 requires a comparison of the cask outlet temperature to the ambient temperature every 24 hours. However, the NRC does not agree to list the specific events in A 5.4 that could cause blockage because SAR Chapter 11 does not provide a comprehensive listing, but instead gives examples of possible events.

Comment G–5: Two commenters noted the NAC–UMS system dissipates heat through conduction from the center of the fuel assembly-filled canister to the canister walls and away from the canister through natural convection by air circulation over the canister's outer surface. The commenters stated that the analysis of the expected configuration described in the PSER Section 4.4.1.2 is based on an unrealistic physical model that assumes concentrically centered fuel assemblies. In fact, conduction is radial (not axial) and is based solely on the physical contact of the fuel assembly with the basket holding the assemblies. The commenters stated that because the NAC–UMS system is a vertical storage system, there is a potential for nonuniform physical contact between the basket and the fuel assembly and that for this reason, hot spots may develop along the axial direction of the fuel rod. The commenters stated that the PSER does not analyze the degradation effects of these hot spots to assure cladding integrity throughout the license storage period and thus, the application does not satisfy the requirements of 10 CFR 72.236(b), (e), (f), and (l).

Response: The NRC disagrees with the comment. The SAR clearly states that conduction and radiation are modeled in the axial and radial directions. Certain aspects of heat transfer are conservatively ignored (e.g. radiation heat transfer from the fuel tubes, and contact between fuel assemblies and fuel tubes, fuel tubes and support/heat transfer disks, and support/heat transfer disks and the canister wall). Consideration of these omissions would only increase the heat transfer from the basket assembly and result in a lowering of the calculated fuel cladding temperature.

Comment G–6: Three commenters stated that to provide for a safer approach and greater flexibility in the loading and use of the NAC–UMS System, the TS should be revised to extend the LCO completion time frames based on a variable heat loading, as appropriate. The commenters noted that the design basis heat load time frames do not provide for an optimal approach to the loading and use of the first canister or those canisters that contain fuel with significantly lower heat loads. The commenters indicated that lower thermal loading will provide for extended time frames for many of the current LCO's and enhance operational safety when loading a canister with lower heat loads. The commenters propose that time frames for 20kW, 17kW, 14kW, 11kW, and 8kW be added to the current 23kW design maximum heat load used in developing the current LCO time frame.

Response: The NRC agrees with the comment in principle; however, the NRC considers the certificate amendment process the most appropriate vehicle for implementing such a change at this time. The NRC has already completed its evaluation and solicited public comments by the rulemaking process, based on the request contained in the application. Extensive changes to the TS to include 5 levels of lower cask heat loads, with corresponding changes to the LCO completion time frames, would necessitate additional NRC review and changes to the CoC and SER to an extent that would warrant soliciting additional public comments on the proposed changes. The NRC notes that similar modifications have already been submitted for NRC review in connection with a certificate amendment request to accommodate the contents of the Maine Yankee spent fuel pool.

H. Technical Specifications

Comment H–1: One commenter stated that the evacuated envelope helium leak test sounds inadequate and that the sniffer probe is not the greatest test either. The commenter said that if the shield lid weld cannot be ultrasonically tested, the weld cannot be called a redundant seal. The commenter has concerns for future leakage, especially in shield lid welds, because of the perceived flaws possible in these lid welds.

Response: The NRC disagrees with the comment. For the types of helium leak tests proposed, the NRC found that these tests are capable of detecting leaks to the required sensitivity provided they are performed properly. Furthermore, liquid penetrant examinations are performed on all field welds' root and final surfaces, or progressive liquid penetrant examinations (*i.e.* root, mid-plane, and final surface of the structural closure weld) in accordance with Interim Staff Guidance ISG–4. For the type of welding process, the environmental conditions near the weld, and the austenitic stainless steel weld base material, there are no known delayed cracking mechanisms that could cause the weld to crack after it has been examined. Subsequent to completing the shield lid field weld, a pneumatic pressure test is performed and then a helium leak test is conducted in accordance with the leak-tight criteria of ANSI N14.5. These tests and examinations have been accepted by the NRC as assurance that the requirements of 10 CFR 72.236(e) for redundant sealing of the confinement boundary have been met.

Comment H–2: One commenter objected to the use of progressive liquid penetrant examination (PT) instead of ultrasonic examination (UT) for the structural lid-to-shell weld. The commenter stated the NRC's justification of allowable flaw size is inadequate and needs reevaluation. The commenter commented that the NRC admits progressive PT is not in agreement with ASME code and that making it easier to test welds and accept flaws is in the favor of the utility and vendor, not the safety of the public and workers. The commenter also stated that "sufficient intermediate layers" is an inadequate requirement that should be more specific.

Response: The NRC accepts examination of the cask closure welds in accordance with Interim Staff Guidance-4, Revision 1 that allows the use of a multi-layer (*i.e.* progressive) liquid penetrant (PT) examination in lieu of a volumetric examination. As stated in the ISG, the critical flaw size is determined in accordance with ASME Section XI methodology and is used to determine the spacing between successive PT examination layers. There is enough experience with the progressive PT method to conclude with reasonable assurance that it will detect flaws that are open to the surface and are of a size that would affect the serviceability of the weld. The probability of a failure to detect a flaw of this size because it did not break the surface is low because the liquid penetrant test is undertaken at intermediate weld pass levels (*i.e.* at ⅜ inch for the ⅞-inch thick structural lid closure weld) as well as at the root and final weld passes.

Comment H–3: Three commenters stated that LCO 3.1.6 (Concrete Cask Heat Removal System) should be revised to modify Required Action B.2.2 to allow for the use of supplemental cooling to the concrete cask with a completion time of 12 hours. The commenters also requested a deletion of the reference to transferring the canister to the transfer cask, as use of the transfer cask only is overly restrictive and may not be feasible in some conditions.

Response: The NRC disagrees with the request to change LCO 3.1.6 to provide an alternative to cooling the canister (by presumably providing some form of forced convection) prior to being required to remove it from the concrete cask. No details have been provided that describe how this would be accomplished. Therefore, this request is not acceptable to the NRC. Additionally, in the NRC's judgment, the use of the transfer cask to provide a means of cooling should remain as an option.

Comment H–4: Three commenters stated that the language of LCO 3.1.5 (Canister Helium Leak Rate) should be revised to read "demonstrate a helium leak rate of less than or equal to" rather than "demonstrate a helium leak rate of less than."

Response: The NRC agrees with the comment. The TS has been changed to incorporate the change in wording.

Comment H–5: One commenter noted that ISG No. 3 lets the vendor and utility "off the hook" as to letting the public know an analysis of the dose consequence from a ground level canister breach with 100% fuel rod failure because it is not credible and the analysis is unnecessary. The commenter's view was that vendors and utilities do not want this analysis out to the public to reduce fear of such a failure. The commenter stated that dry cask storage is in its infancy and that such a failure is possible. The commenter said that the public deserves to know dose consequences of all related events, the NRC should be for public and worker safety, and the more information and education the public can get on dry cask storage, the more the public can help solve the problems and ask the right questions.

Response: The NRC disagrees with the implication that ISG–3 was developed to reduce the fear of the public to nonmechanistic accidents such as noncredible failures of the confinement boundary. ISG–3 clarifies the distinction between retrievability and postaccident recovery, and focuses on the identification and evaluation of all credible accident scenarios affecting public health and safety. ISG–3 specifically places emphasis on identifying accidents with potential consequences resulting in the failure of

the confinement boundary and also recommends the modification of emergency plans and event detection capabilities to ensure that licensees have the ability to identify an accident or non-compliance situation. The NRC agrees with the remainder of the comment regarding the rights of the public pertaining to the dose consequences of credible events, concerns regarding public and worker safety, and providing information that enhances the overall understanding of dry cask storage.

Comment H–6: Three commenters requested that Section A5.2 [after A5.2 (n)]of the TS be revised to add the following sentence: "Appropriate mockup fixtures may be used to demonstrate and/or to qualify procedures, processes, or personnel in welding, weld inspection, vacuum drying, helium backfilling, leak testing, and weld removal or cutting."

Response: The NRC agrees with the proposed clarification of the TS and it has been revised accordingly.

Comment H–7: Three commenters requested that Table A5–1 of the TS be revised to indicate a Lifting Height Limit of "<24 inches." The commenters noted that this requested change is consistent with Section 11.2.4.2 of the Preliminary Safety Evaluation Report.

Response: The NRC agrees with the comment. Table A5–1 of the TS has been revised as suggested.

I. Miscellaneous

Comment I–1. One commenter recommended that the SAR title shown in the proposed cask CoC state "as amended" instead of "Revision 2." The commenter commented that identifying a specific SAR revision in the CoC may imply that a CoC amendment requiring prior NRC approval would be required to amend or revise the FSAR. However, the approved changes to 10 CFR 72.48 will allow the cask certificate holder to make changes to the FSAR without prior NRC approval. Also, 10 CFR 72.248 requires the cask certificate holder to periodically update the cask FSAR. Therefore, it would be more accurate and reflect the 10 CFR 72.48 change process and the 10 CFR 72.248 FSAR update requirement if the SAR title shown in the CoC were to state "as amended." This is typically how Part 50 reactor operating licenses refer to the reactor FSAR.

Response: The NRC agrees with the comment. The SAR Title shown on the CoC has been revised to delete a reference to a particular SAR revision number.

Comment I–2: Two commenters stated that neither the applicant nor the NRC has analyzed the impact of pinhole and hairline crack cladding defects over the 20-year license period, much less over the likely storage duration. The commenters stated that extraordinary attention must be given to the removal of water from the loaded canister and that the proposed vacuum drying process will not remove the water completely. They also asserted that available water will react with UO_2 based fuel to form a U_3O_8 phase that could lead to unzipping of the cladding with hairline cracks or pinhole leaks. Therefore, they believe emerging research shows that incomplete drying of the spent fuel before storage combined with demonstrated physical processes can enlarge those defects and "unzip" the cladding, thus breaching a primary containment barrier for the fuel.

Response: The NRC agrees that vacuum drying is an important procedure to prevent the degradation of the spent fuel cladding during storage. However, the NRC disagrees that the impacts of pinhole and hairline crack cladding defects on long term storage have not been evaluated.

All spent fuel storage cask licensees are required to conduct vacuum drying and inert gas backfilling operations to remove oxidizing species from the cask and prevent cladding degradation. As discussed in the report, "Evaluation of Cover Gas Impurities and Their Effects on the Dry Storage of LWR Spent Fuel" (Report Number PNL–6365), and as described in the Standard Review Plan for Dry Cask Storage Systems (NUREG–1536), the combination of the low pressure and elevated temperature of the spent fuel during vacuum drying should remove all of the water from the cask and oxidizing species to an amount less than 1.0 gram-mole. More specifically, after the liquid water has been removed from the storage cask, the air and water vapor are evacuated from the cask until a steady pressure of less than or equal to 3 millimeters of mercury (mm Hg) is achieved and maintained for 30 minutes. Then, the cask is backfilled with helium gas before a second cycle of vacuum drying (*i.e.*, 3 mm Hg for another 30 minutes) is performed. The cask user is required, by the operating procedures in the SAR and in the TS to perform the vacuum drying procedure to ensure there is less than 1.0 gram-mole of oxidizing gases in the cask. These procedures reduce the levels of oxidizing gases to concentrations below those that could cause the fuel to oxidize to the U_3O_8 phase and produce larger gaps in cladding with existing pinhole or hairline crack defects. Therefore, the NRC has reasonable assurance that, if cask licensees conduct the vacuum drying and inert gas backfilling procedures in accordance with the TS of the SAR, the cladding will be protected from gross ruptures (or "unzipping") during storage.

Comment I–3: Two commenters stated that the applicant has not provided reasonable assurance that the NAC–UMS storage system will maintain the required level of confinement integrity in the proposed dry storage installation under the known, normal conditions; has not provided the required assurance that the single failure-proof confinement requirements for cladding and cask integrity will be unimpaired during the expected storage interval; and in particular, has not provided assurance that the integrity of the primary confinement barrier (cladding) will be maintained during the licensed period from cask closure until relicensing or shipment. The commenters also stated that the absence of a primary barrier violates the single failure requirement in 10 CFR 72.236(e) for confinement of the radioactive material.

Response: The NRC disagrees with the comment. In general, the spent fuel cladding is not considered to be the primary confinement boundary of a dry storage cask. Cladding integrity is very important to prevent the fuel from redistributing in the storage cask and to ensure that any release of radioactive material from the cladding has been analyzed in the SAR. For example, one assumption of the confinement analysis is that 1%, 10%, and 100% of the fuel source term are available for release from the cladding under normal, off-normal, and hypothetical accident conditions, respectively. As a conservative approach, the analyses are conducted with those source term release fractions even though there may be no pinholes or hairline cracks in the cladding under normal, off-normal, and hypothetical accident conditions. Further, the NRC has reasonable assurance that existing cladding integrity will be preserved by both maintaining cladding temperatures below the calculated temperature limits and conducting vacuum drying operations in accordance with the TS. (Also, refer to the responses to comments C–6 and I–2.)

As noted in SER Section 7.1, the primary confinement boundary of the NAC–UMS storage system includes the TSC shell, bottom baseplate, shield lid (including the vent and drain port cover plates), and the associated welds. The shield lid (with the vent and drain port cover plates welded to the lid) and the structural lid are independently welded to the upper part of the TSC shell. This

design provides redundant sealing of the confinement boundary and satisfies the requirements of 10 CFR 72.236(e). Therefore, through the analyses presented in SAR Chapter 7, the applicant has demonstrated that the NAC–UMS storage system will maintain the required level of confinement integrity under all conditions of storage. As documented in SER Chapter 7, the NRC concludes that the design of the confinement system of the NAC–UMS storage system is in compliance with 10 CFR Part 72.

Comment I–4: One commenter stated that control components should be low level waste and that only high level waste should be allowed in high level waste containers being sent to a repository. The commenter thinks that failure to separate high and low level waste will result in more handling and confusion in the long run.

Response: The NRC has issued Interim Staff Guidance No. 9, entitled, "Storage of Pressurized Water Reactor (PWR) Fuel Assembly Integral Hardware" to address the authorized storage of control components in spent fuel storage casks. Although control rods are specifically excluded from the NAC–UMS authorized contents, other integral components (*e.g.*, burnable poison inserts and thimble plugs) associated with fuel assemblies have been requested as authorized contents. The NRC's evaluation considered the guidance of ISG–9 in the preliminary SER as it relates to storage under 10 CFR Part 72. The aspects of the comment pertinent to the separation of high and low-level wastes and the future acceptance criteria at a repository are beyond the scope of this rule.

Comment I–5: One commenter noted that two cycles of vacuum drying and helium backfilling are specified for this cask design, and asked if the VSC–24 casks at Palisades and Pt. Beach did not have this done, how safe are those casks and is there any water vapor in the casks.

Response: This rule pertains solely to the evaluation and safe operation of the NAC–UMS storage cask design. Comments pertaining to the VSC–24 or any other cask design were not a subject of the NRC's evaluation of the NAC–UMS design, and are thus beyond the scope of this rule.

Comment I–6: One commenter stated that during cooldown for reflooding, very detailed definite criteria are needed for the steam and water being discharged. The commenter also stated that each cask user should have site-specific procedures in place to add to generic procedures so that all is ready before any cask is loaded, and that the NRC needs to check this activity.

Response: The NRC has reviewed and accepted the generic unloading procedure guidance contained in SAR Chapter 8 that includes detailed criteria to control the evolution. Detailed loading and unloading procedures prepared using the technical basis established in the SAR are a site-specific aspect that is beyond the scope of this rule.

Comment I–7: One commenter stated there should be definite criteria regarding records as to what are permanent and not left up to the licensees to decide, resulting in faded photographs and videos that have disappeared. The commenter suggested checking with experts on permanent recordkeeping.

Response: 10 CFR Part 72, Subpart G, requires that records pertaining to the design, fabrication, erection, testing, maintenance, and use of systems, structures, and components important to safety be maintained until decommissioning of the cask is complete. Criteria for records are specified in Subpart G.

Comment I–8: One commenter remarked that "mobile lifting frame" sounds very vague. The commenter asked if the mobile lifting frame is a transporter, how it works, and if it has been developed.

Response: The TS in the "Design Features" section establishes requirements for the design and operation of a canister handling facility, including any mobile lifting devices. The specific design for a mobile lifting frame was not, and is not required to be, submitted as part of the approval for the NAC–UMS storage cask design. Such a design, if implemented in the future, must be consistent with the cask design basis described in the SAR, the TS, and implemented on a site-specific basis in accordance with existing heavy-loads provisions at a facility licensed under 10 CFR Part 50.

Comment I–9: One commenter stated that the off-normal and accident conditions always assume a cask is fabricated correctly, and asked what problems could occur if there were fabrication problems. The commenter thought fabrication problems and worker mistakes are the leading concerns with dry casks, stated that is why the design has to have the best review possible, and that instructions and criteria have to be simple and clear. The commenter said that the casks will be on the pads forever and the issuance of a CoC should not be rushed.

Response: The NRC agrees that instructions and criteria should be clear and that issuance of a CoC should not be rushed. Part 72 CoCs are issued for 20 years and are then subject to review for renewal, if applicable. The NAC–UMS design has been under NRC review since 1997.

The NRC's approval of cask designs does rely, in part, on the design, fabrication and operation being conducted under an approved quality assurance (QA) program. An approved QA program includes programmatic controls of non conformances, corrective actions, and audits. The NRC has found reasonable assurance that the approved design, manufactured under an approved QA program, will ensure public health and safety under all normal, off-normal, and accident conditions.

Comment I–10: One commenter stated that a quality assurance program is only as good as it is put to use, and that NRC's unannounced visits to contractors and subcontractors are very important. The commenter also stated that licensees need to give full documentation to changes in the design and keep the SAR current.

Response: The NRC agrees with the comments.

Comment I–11: One commenter stated the "main problem" is that nothing in the review considers or involves the review of ultimate disposal of spent nuclear fuel and speculated that Yucca Mountain will never open. The commenter made several general comments about storage and disposal of nuclear waste and alternative forms of energy, and suggested that as more spent nuclear fuel is handled and transported, the probability of more problems will arise.

Response: Comments regarding the future use of a repository, transport and disposal of nuclear waste, and alternative energy forms are beyond the scope of this rule. The NRC recognizes its responsibility to ensure the public's health and safety, independent of the amount of spent fuel handling and transport that occurs under its regulatory oversight, now and in the future.

Comment I–12: One commenter asked how the 5-inch carbon steel temporary shield is used during welding, draining, drying, and helium backfill operations.

Response: A carbon steel temporary shield is placed over the transport cask top to shield workers from the loaded canister. Because gamma radiation is the predominant radiation emitted from the top of the canister, the 5-inch thick carbon steel temporary shield will reduce the gamma radiation dose to the workers.

Comment I–13: One commenter asked for an explanation and dates of the skyshine experiments performed at Kansas State University.

Response: The Skyshine-III, version 4.0.0 code was benchmarked with a Co^{60} skyshine experiment and a neutron skyshine calculation, both reported by Kansas State University (KSU). The Co^{60} skyshine experiment was performed for a Co^{60} source in a concrete silo with two different thickness roofs and no roof. The KSU neutron benchmark computations were performed for upward directed conical neutron point sources. Skyshine experiments are performed at KSU on an on-going basis. Discussions of skyshine experiments can be found in the book, "Radiation Shielding" by J. Kenneth Shultis and Richard E. Faw, published by Prentice Hall PTE, 1996 and also in the SKYSHINE–III PC and SKYSHINE–KSU computer code manuals. The codes and manuals are available from the Oak Ridge National Laboratory's Radiation Safety Information Computational Center.

Comment I–14: One commenter was concerned with computer models and the wording in Section 5.3 of the SER that states "input for these codes * * * appears to be appropriate." The commenter asked if the input is correct.

Response: The input data used by NAC for determining the source term of the design basis PWR and BWR nuclear fuel is acceptable. The NRC staff performed independent calculations to confirm NAC's evaluation of the source terms. The SAS2H module of the SCALE computer code uses a free form style for inputting the data that must be carefully reviewed to determine which keywords and variables have been used in the input. Also, the various fuel parameters can have a range of acceptable values that may be used in the input.

Comment I–15: Three commenters requested that Section 1.b (page 2 of 4, last paragraph) of the CoC be revised to read: "To minimize contamination of the Transportable Storage Canister (TSC) exterior and interior of the transfer cask, clean water is circulated in the gap between the transfer cask and the Transportable Storage Canister (TSC) during loading."

Response: NRC agrees with this comment. The CoC has been revised accordingly.

Comment I–16: Two commenters stated the PSER does not address the impact of the NAC–UMS cask storage system on stormwater quality.

Response: Stormwater quality is beyond the scope of this rule. Any applicable stormwater quality issues will be addressed in the 10 CFR Part 72.212 site-specific evaluations performed prior to using the cask.

Comment I–17: One commenter recommended that the wording in SER 5.4.3 be: "Consequently, final determination of compliance with 72.104(a) is the responsibility of each Independent Spent Fuel Storage Installation (ISFSI) licensee" instead of "responsibility of each applicant for a site license." The commenter commented that the reference to an "applicant for a site license" is contrary to the SER introduction which states that the cask may be used by an ISFSI general licensee under 10 CFR Part 72. An ISFSI general licensee would be required to have site-specific evaluations in accordance with 10 CFR 72.212 but would not be required to apply for a site license. Further, an ISFSI licensee would be responsible for compliance with 10 CFR 72.104(a) at all times, not just during an application for a license.

Response: The NRC agrees. The SER has been revised accordingly.

Comment I–18: Three commenters requested that the first paragraph of Section 8.2 of the SER be revised to refer to CoC Appendix A, Section A 5.6 for the transport evaluation program, not Section A 5.5.

Response: The NRC agrees with the proposed clarification of the SER, that has been revised accordingly.

Comment I–19: Two commenters expressed concerns about the implications of long-term storage of spent nuclear fuel. One of the commenters had an acute interest in NRC's evaluation of this application because of Maine Yankee's intended use of this system for long-term storage following decommissioning. The commenters expected that the DOE will not remove all the spent nuclear fuel for 20 years or longer after plants cease operations and stated that whatever storage system is chosen must ensure the public's health and safety for an extended period and must ensure that the fuel will be acceptable for removal when the DOE is prepared to take it years in the future. One commenter commented that because spent fuel with pinholes or hairline cracks may deteriorate during storage, the NRC's evaluation of the NAC–UMS system does not provide the necessary assurance that the spent fuel will be acceptable to the DOE for permanent disposal.

Response: The NRC agrees with and shares the commenters' concerns regarding the safe storage of spent nuclear fuel for any and all lengths of time.

The NRC's cask certification regulations stipulate that the user's general license to store spent fuel in a particular cask design terminates 20 years after the cask design's first use by that licensee. If the CoC has been renewed, the general license expires 20 years after the CoC's renewal date. The NRC will review spent fuel storage cask designs periodically to consider any new information, either generic to spent fuel storage or specific to cask designs, that may have arisen since issuance of the cask's CoC. The 20-year time limitation expressly provides an opportunity for the NRC to address any and all safe storage implications associated with storing spent fuel, including spent fuel whose cladding has pinhole leaks or hairline cracks, in particular casks for longer than 20 years. The NRC's initial and recertification reviews of cask designs are independent of the DOE's capabilities to accept spent fuel for permanent disposal at any point in time. However, the NRC's initial and renewal evaluations of a cask design have and will consider both the public health and safety and the retrievability of the spent fuel contents.

Regarding the DOE's acceptance of spent fuel for permanent disposal in the future and the impact of storing spent fuel cladding with pinholes or hairline cracks, Dr. Ivan Itkin, Director of the Office of Civilian Radioactive Waste Management, addressed that issue for the Maine Yankee reactor. Dr. Itkin confirmed in a letter to Maine's Governor Angus S. King dated May 3, 2000 that DOE's contract for disposal with Maine Yankee covers the acceptance, transport, and disposal of all spent nuclear fuel from the Maine Yankee reactor, regardless of the condition of the spent fuel. Dr. Itkin further noted that, although the DOE may be currently delayed in its ability to begin the disposal of the Nation's commercial spent nuclear fuel, DOE has every intention of fulfilling its contractual obligations to all of its utility customers.

Comment I–20: Two commenters requested that as a prerequisite to approving the proposed rule, the NRC acquire binding assurances from the DOE that the DOE will accept spent fuel for transport and disposal that has been stored in accordance with NRC-approved procedures. Those procedures must ensure that stored spent fuel will remain in a condition the DOE can accept. The commenters stated that these considerations and 10 CFR 72.236 preclude approval of the proposed certification until the NRC and the applicant have thoroughly analyzed and resolved critical outstanding issues.

Response: The NRC disagrees that 10 CFR 72.236 requires the NRC to obtain binding assurances from the DOE regarding the acceptance of spent fuel for disposal prior to approving a storage cask design.

DOE's efforts to develop a multi-purpose canister (MPC) program gave rise to several recent dual purpose (storage and transportation) cask design applications, including the NAC–UMS. With dual purpose designs, fuel no longer must be returned to the reactor spent fuel pool for repackaging. Dual purpose cask designs have the capability of being prepared for offsite transportation without having to handle individual fuel assemblies or return to a spent fuel pool. DOE is continuing to develop the cask design characteristics and parameters for disposal.

Regarding the DOE's acceptance of spent fuel for permanent disposal in the future, Dr. Ivan Itkin, Director of the Office of Civilian Radioactive Waste Management, recently addressed that issue for the case of Maine Yankee reactor. Dr. Itkin confirmed in a letter to Maine's Governor Angus S. King dated May 3, 2000, that DOE's contract for disposal with Maine Yankee covers the acceptance, transport, and disposal of all spent nuclear fuel from the Maine Yankee reactor, regardless of the condition of the spent fuel. Dr. Itkin further noted that, although the DOE may be currently delayed in its ability to begin the disposal of the Nation's commercial spent nuclear fuel, DOE has every intention of fulfilling its contractual obligations to all of its utility customers. Because the DOE's spent fuel acceptance criteria for ultimate disposal has not yet been formalized, it would be not be practical to preclude a storage approval on this basis at this time.

Comment I–21: Two commenters stated that the PSER does not address the necessary financial capability of a license holder to operate and maintain the NAC–UMS cask storage system over the 20-year license period.

Response: This comment is beyond the scope of this rule. The financial capabilities of a certified cask design's user, a general licensee, are not required to be addressed in an application under 10 CFR Part 72, Subpart L. The NRC published a proposed rule in the **Federal Register** on November 3, 1999 (64 FRN 59677) that would clarify the portions of 10 CFR Part 72 that apply to activities associated with the general license, a specific license, and a CoC. Requirements regarding the financial capabilities of a cask user are not identified as being applicable to activities associated with obtaining a CoC in the proposed rule.

Comment I–22: Two commenters stated that the PSER does not address the necessary technical capability of the license holder to operate and maintain the NAC–UMS cask storage system.

Response: This comment is beyond the scope of this rulemaking. Requirements on the technical capabilities of a general licensee are principally contained in §§ 72.210 and 72.212. This rulemaking addressed question on the adequacy of the NAC–UMS cask design and changes to § 72.214. Therefore, the preliminary SER was not required to address questions on the adequacy of a general licensee who may wish to use the NAC–UMS cask design. The NRC's requirements on the adequacy of a cask design are contained in Subpart L of Part 72. These requirements apply to an applicant for a CoC and a certificate holder, not a general licensee. The NRC recently added a new section (§ 72.13) to Part 72 in a final rule to clarify which requirements apply to a specific licensee, a general licensee, or a certificate holder (see 65 FR 50606; August 21, 2000). Section 72.13 specifies that requirements for the qualification of a spent fuel storage cask design do not apply to a general licensee. Rather, they apply to the certificate holder (and applicant for a CoC).

Comment I–23: One commenter preferred that sensitivity studies for the canister deceleration g-loads and the tipover analysis be done by an independent party, not by NAC, and that sensitivity checks should be done by independent evaluation.

Response: The SAR sensitivity analyses examine how the structural performance, including impact decelerations of the NAC–UMS system, varies with changes of modeling parameter values for the 24-inch vertical drop and tip-over accidents. These analyses follow standard engineering practice for evaluating applicability of analytical modeling and results. In evaluating the SAR analyses, the NRC determined that the analyses were adequate. Therefore, additional independent evaluation is not warranted.

Comment I–24: One commenter expressed concern about long-term cask materials performance issues such as lead slumping and thermal aging, specifically as reactions that could cause creation of new materials and new interactions between the newly formed materials.

Response: As part of any storage cask application review, the NRC evaluates the long term materials issues, such as thermal aging and lead slumping. The maximum calculated temperatures of the various cask materials do not exceed the temperature limits for any conditions of storage. Therefore, the NRC is assured from the analyses provided in SAR Chapter 4 that the thermal load from the spent fuel will not adversely impact the ability of those materials to perform their intended functions during storage. Further, lead slumping would only be a concern for the lead in the annulus of the transfer cask while the TSC is contained inside (i.e., during transfer of the fuel from the spent fuel pool to the VCC). When the transfer cask is not being used, the lead is assumed to be at ambient temperatures. As noted in SER Section 3.1.4.2, no softening or flow of lead is expected in the annulus due to lead slumping.

Comment I–25: One commenter stated that Charpy testing of materials needs to be verified before any casks are loaded. The commenter asked who verifies the Charpy test of materials, where is the verification in the documents, and is the information clear.

Response: In general, some steel materials require minimum Charpy impact properties for structural applications as required by the governing consensus standard or codes (*e.g.*, ASTM, ASME Boiler and Pressure Vessel Code, etc.). The NAC–UMS storage cask utilizes several types of steel including stainless and carbon steel. The PWR support disks are fabricated with ASME SA–693, Type 630 (H1150) precipitation-hardened steel. A typical minimum impact absorption energy requirement for Type 630 stainless steel is 48 foot-pounds at −110 °F. Therefore, for the NAC–UMS storage cask, there is enough ductility in the material so that fracture of the material is not expected at the minimum specified service temperature of −40 °F. The BWR support disks are fabricated from ASME SA–533, Type B, carbon steel. As noted in SER Section 3.1.4.1, the applicant has committed to specifying Charpy impact testing for each plate of material in accordance with ASME Code Section III, Subsection NG–2320. With regard to testing the Charpy impact energy, it is the responsibility of the supplier of the material to perform the necessary tests in accordance with the purchase order and to document the results of those tests on the Certified Materials Test Record that accompanies each lot of material shipped to a customer. For the NAC–UMS cask, documentation for the materials used to fabricate a cask will be controlled in accordance with a quality

control program that conforms to the requirements of 10 CFR part 72, Subpart G.

Comment I–26: One commenter asked if ferritic steel is different than carbon steel. The commenter asked if the ferritic steel anchor base plate and optional lifting anchors should be stainless steel.

Response: Ferritic steel is one of several classifications of stainless steel. In general, stainless steels are more resistant to rusting than plain-carbon and low-alloy steels. Stainless steels also have superior corrosion resistance because they contain relatively large amounts of alloying elements (*e.g.*, chromium). Carbon steels, also known as plain carbon steels, have no minimum quantity for any alloying elements and contain only a small amount of elements other than the commonly accepted carbon, silicon, manganese, copper, sulfur, and phosphorus. Carbon steels are generally much less corrosion resistant than stainless steels.

The use of the ASTM A537, Class 2, carbon steel for the VCC lifting lug and its anchor plate is NAC's choice for meeting its design objectives. SAR Subsection 3.4.3.1.3 evaluates the lifting lug and its anchor plate, that has been reviewed and determined structurally adequate in SER Subsection 3.2.3.4.

Comment I–27: One commenter asked what the word "chemical" means in the term "interlocking chemical lead bricks" in Section 3.1.4.2 of the SER and what are the chemicals. The commenter also asked what could the chemicals create if water leaked into the lead chamber.

Response: Interlocking chemical lead bricks are used in the transfer cask for gamma shielding. There are no chemicals added to the lead. The term "chemical" refers to a grade of lead that is specified in the ASTM Standard B29 for lead materials. The grade specified as "Chemical-Copper Lead" is almost identical to the "Pure Lead" grade. Chemical-copper lead has 99.90% elemental lead (versus 99.94% elemental lead for the Pure Lead grade) and has 0.04% more alloying elements (*e.g.*, copper) than Pure Lead. Because the lead is encased between the inner and outer shells and the top and bottom end plates of the transfer cask, the lead is not expected to come in contact or react with the spent fuel pool water.

Comment I–28: One commenter asked several questions about the NS-4-FR shielding material including: what other cask systems use NS-4-FR; how long has NS-4-FR been in use; what does the word "reliably" mean as used in SER Section 3.1.4.2; how has the NS-4-FR been tested for fire resistance; what can happen if the NS-4-FR gets wet because of a transfer cask leak; where NS-4-FR has been tested to prove it will work well in long term dry cask storage; and if the NRC has checked the materials sheets from the manufacturer of NS-4-FR for the specifications.

Response: NS-4-FR has been used as a neutron shield in two licensed storage casks in the United States for up to 10 years and in more than 50 licensed casks in Japan, Spain and the United Kingdom. Various research groups have performed both radiation and thermal stability testing over the last 15 years. Data from these tests adequately demonstrate long-term thermal and radiation stability. Further, the NRC has not received any reports that the shielding effectiveness of the NS-4-FR material has become degraded. Therefore, the NRC staff believes that this material is reliable for the purpose of shielding neutrons from personnel and the environment.

The NS-4–FR material consists of many elements including hydrogen. The chemistry of the material (*e.g.*, the way the elements are bonded to one another) contribute significantly to the fire retardant capability of the NS-4-FR. Even though the material contains hydrogen, the ingredients were selected so the NS-4-FR resists fire and the generation of hydrogen gas that could cause the material to combust. Data supplied by the applicant show that approximately 90% of the gases that evolve from the NS-4-FR material when it is exposed to relatively high temperatures consists of water.

The neutron shields in the transfer cask and the VCC shield plug are enclosed in welded steel shells so water and direct flames from a fire cannot get in contact with the NS-4-FR. If water were to contact NS-4-FR, the material is inert. Therefore, gases will not form due to contact between the NS-4-FR and water. Further, if fire were to contact the shield material, data show that the material only becomes charred on the surface and rapid extinguishing of the flame after the source of the flame is removed.

Thermal and radiation testing of the NS-4-FR material was conducted in the United States by Bisco Products, Inc. and by several Japanese organizations to assess the material's long term performance under dry cask storage conditions. As part of the SAR review, the NRC staff routinely checks any manufacturer specification sheets to ensure that the material is being used in accordance with manufacturer's recommendations.

Comment I–29: One commenter asked if Keeler & Long and Carboline epoxy enamel paint has been checked for use on casks in actual situations. The commenter also asked whether paint patch-up jobs exacerbate corrosion.

Response: The Keeler & Long E-Series Epoxy and Carboline 890 paint coatings that are used to coat the exposed surfaces of the transfer cask are routinely recommended by the paint manufacturers for use in nuclear power plant applications. Further, these particular paint coatings have been used extensively under radiation and spent fuel pool water immersion conditions. Therefore, the NRC staff agrees with the applicant's statements in SAR Section 3.4.1.2.4 that there will be no adverse effects from contact between either of the paint coatings and spent fuel pool water because the paint will be applied in accordance with the paint manufacturer's recommendations. With regard to repainting areas where the coating has been removed (*e.g.*, by scratching), paint patching will be done in accordance with the paint manufacturer's recommendations and the transfer cask maintenance program described in SAR Chapter 9, and is specifically performed to not exacerbate corrosion.

Comment I–30: One commenter asked what is the date of ASME Code Section III, Part D, referenced in Section 3.1.4.6 of the SER. The commenter also asked what are the other acceptable references and their dates, and that the references be included in the SER.

Response: The 1995 Edition of the ASME Boiler and Pressure Vessel Code (B&PVC), Section II, Part D, is referenced in Section 3.1.4.6 of the SER. Other acceptable sources of information are referenced in SAR Section 3.2 and include: the 4th Editions of the Metallic Materials Specification Handbook, 1992; Military handbook MIL–HDBK–5G, U.S. Department of Defense, 1994; ASME B&PVC Code Cases—Nuclear Components, 1995 Edition, Code Case NC–71–17; and the Genden Engineering Services & Construction NS–4–FR Product Data Sheet.

Comment I–31: One commenter stated that the dry spent fuel loading and unloading referenced in Evaluation Finding F3.9 should not be in the SER unless it has been evaluated. The commenter asked what dry loading procedures are being referenced.

Response: The SAR procedures only address wet loading and unloading fuel from the NAC–UMS storage cask. Dry loading or unloading procedures are not included with this application and were not a part of the NRC's review. The SER finding was modified to indicate that

the materials are compatible with wet loading and unloading operations and facilities.

Summary of Final Revisions

Based on the responses above, the NRC has modified the CoC, the TSs and the SER as follows:

- LCO 3.2.2 has been revised (Comment B–7).
- TS A 3.1.7, "Fuel Cooldown Requirements" associated with canister unloading procedures has been deleted from the TS (Comment C–2).
- Parameters provided in B 3.4(6) of the "Approved Contents and Design Features" in Appendix B of CoC 1015 have been removed from the TS. This same set of site concrete pad and soil parameters is relevant to the tip-over analysis are being summarized in SAR Subsection 11.2.12 (Comment C–17).
- Section B 2.1.2 of the "Approved Contents and Design Features" has been edited (Comment D–4).
- B 2.2.3 of the "Approved Contents and Design Features" has been revised (Comment D–9).
- Tables B2–2 and B2–3 of the "Approved Contents and Design Features" have been revised. (Comment D–10).
- B 3.5.2.1 (4) of the Approved Contents and Design Features has been revised (Comment D–12).
- Table B3–2 of the Approved Contents and Design Features has been revised (Comment D–13).
- SER Subsection 3.1.1.3 has been revised (Comment F–4).
- SAR Drawing 790–584 has been revised to permit the use of ASME SA182 as an alternate to SA240 for both the shield and structural lids of the TSC (Comment F–5).
- The second frequency of surveillance requirement (SR) 3.1.1.1 and SR 3.1.1.2 within LCO 3.1.1 has been revised (Comment G–3).
- SR 3.1.6.2 has been deleted (Comment G–4).
- LCO 3.1.5 (Canister Helium Leak Rate) has been revised (Comment H–4).
- Section A 5.2 [after A 5.2 (n)]of the TS has been revised (Comment H–6).
- Table A5–1 of the TS has been revised (Comment H–7).
- The SAR title on the CoC has been revised (Comment I–1).
- Section 1.b (page 2 of 4, last paragraph) of the CoC has been revised (Comment I–15).
- SER 5.4.3 has been revised (Comment I–17).
- Section 8.2 of the SER been revised to refer to CoC Appendix A, Section A 5.6 for the transport evaluation program, while the Section A 5.5 reference to the transport evaluation program has been deleted (Comment I–18).
- SER Evaluation Finding F3.9 has been revised (Comment I–31).

Agreement State Compatibility

Under the "Policy Statement on Adequacy and Compatibility of Agreement State Programs" approved by the NRC on June 30, 1997, and published in the **Federal Register** on September 3, 1997 (62 FR 46517), this rule is classified as compatibility Category "NRC." Compatibility is not required for Category "NRC" regulations. The NRC program elements in this category are those that relate directly to areas of regulation reserved to the NRC by the Atomic Energy Act of 1954, as amended (AEA), or the provisions of Title 10 of the Code of Federal Regulations. Although an Agreement State may not adopt program elements reserved to NRC, it may wish to inform its licensees of certain requirements via a mechanism that is consistent with the particular State's administrative procedure laws, but does not confer regulatory authority on the State.

Voluntary Consensus Standards

The National Technology Transfer Act of 1995 (Pub. L. 104–113) requires that Federal agencies use technical standards that are developed or adopted by voluntary consensus standards bodies unless the use of such a standard is inconsistent with applicable law or otherwise impractical. In this final rule, the NRC is adding the NAC–UMS cask system to the list of NRC-approved cask systems for spent fuel storage in 10 CFR 72.214. This action does not constitute the establishment of a standard that establishes generally-applicable requirements.

Finding of No Significant Environmental Impact: Availability

Under the National Environmental Policy Act of 1969, as amended, and the Commission's regulations in Subpart A of 10 CFR part 51, the NRC has determined that this rule is not a major Federal action significantly affecting the quality of the human environment and therefore, an environmental impact statement is not required. This final rule adds an additional cask to the list of approved spent fuel storage casks that power reactor licensees can use to store spent fuel at reactor sites without additional site-specific approvals from the NRC. The environmental assessment and finding of no significant impact on which this determination is based are available for inspection at the NRC Public Document Room, 11555 Rockville Pike, Rockville, MD and electronically at *http://ruleforum.llnl.gov*. Single copies of the environmental assessment and finding of no significant impact are available from Stan Turel, Office of Nuclear Material Safety and Safeguards, U.S. Nuclear Regulatory Commission, Washington, DC 20555, telephone (301) 415–6234, e-mail spt@nrc.gov.

Paperwork Reduction Act Statement

This final rule does not contain a new or amended information collection requirement subject to the Paperwork Reduction Act of 1995 (44 U.S.C. 3501 *et seq.*). Existing requirements were approved by the Office of Management and Budget, approval number 3150–0132.

Public Protection Notification

If a means used to impose an information collection does not display a currently valid OMB control number, the NRC may not conduct or sponsor, and a person is not required to respond to, the information collection.

Regulatory Analysis

On July 18, 1990 (55 FR 29181), the Commission issued an amendment to 10 CFR part 72. The amendment provided for the storage of spent nuclear fuel in cask systems with designs approved by the NRC under a general license. Any nuclear power reactor licensee can use cask systems with designs approved by the NRC to store spent nuclear fuel if it notifies the NRC in advance, the spent fuel is stored under the conditions specified in the cask's CoC, and the conditions of the general license are met. In that rule, four spent fuel storage casks were approved for use at reactor sites and were listed in 10 CFR 72.214. That rule envisioned that storage casks certified in the future could be routinely added to the listing in 10 CFR 72.214 through the rulemaking process. Procedures and criteria for obtaining NRC approval of new spent fuel storage cask designs were provided in 10 CFR Part 72, Subpart L.

The alternative to this action is to withhold approval of this new design and issue a site-specific license to each utility that proposes to use the casks. This alternative would cost both the NRC and utilities more time and money for each site-specific license. Conducting site-specific reviews would ignore the procedures and criteria currently in place for the addition of new cask designs that can be used under a general license, and would be in conflict with Nuclear Waste Policy Act (NWPA) direction to the Commission to approve technologies for the use of spent fuel storage at the sites of civilian nuclear power reactors without, to the

maximum extent practicable, the need for additional site reviews. This alternative also would tend to exclude new vendors from the business market without cause and would arbitrarily limit the choice of cask designs available to power reactor licensees. This final rule will eliminate the above problems and is consistent with previous NRC actions. Further, the rule will have no adverse effect on public health and safety.

The benefit of this rule to nuclear power reactor licensees is to make available a greater choice of spent fuel storage cask designs that can be used under a general license. The new cask vendors with casks to be listed in 10 CFR 72.214 benefit by having to obtain NRC certificates only once for a design that can then be used by more than one power reactor licensee. The NRC also benefits because it will need to certify a cask design only once for use by multiple licensees. Casks approved through rulemaking are to be suitable for use under a range of environmental conditions sufficiently broad to encompass multiple nuclear power plants in the United States without the need for further site-specific approval by NRC. Vendors with cask designs already listed may be adversely impacted because power reactor licensees may choose a newly listed design over an existing one. However, the NRC is required by its regulations and NWPA direction to certify and list approved casks. This rule has no significant identifiable impact or benefit on other Government agencies.

Based on the above discussion of the benefits and impacts of the alternatives, the NRC concludes that the requirements of the final rule are commensurate with the Commission's responsibilities for public health and safety and the common defense and security. No other available alternative is believed to be as satisfactory, and thus, this action is recommended.

Regulatory Flexibility Certification

In accordance with the Regulatory Flexibility Act of 1980 (5 U.S.C. 605(b)), the NRC certifies that this rule will not, if promulgated, have a significant economic impact on a substantial number of small entities. This rule affects only the licensing and operation of nuclear power plants, independent spent fuel storage facilities, and NAC. The companies that own these plants do not fall within the scope of the definition of "small entities" set forth in the Regulatory Flexibility Act or the Small Business Size Standards set out in regulations issued by the Small Business Administration at 13 CFR part 121.

Backfit Analysis

The NRC has determined that the backfit rule (10 CFR 50.109 or 10 CFR 72.62) does not apply to this rule because this amendment does not involve any provisions that would impose backfits as defined in the backfit rule. Therefore, a backfit analysis is not required.

Small Business Regulatory Enforcement Fairness Act

In accordance with the Small Business Regulatory Enforcement Fairness Act of 1996, the NRC has determined that this action is not a major rule and has verified this determination with the Office of Information and Regulatory Affairs, Office of Management and Budget.

List of Subjects in 10 CFR Part 72

Criminal penalties, Manpower training programs, Nuclear materials, Occupational safety and health, Reporting and recordkeeping requirements, Security measures, Spent fuel.

For the reasons set out in the preamble and under the authority of the Atomic Energy Act of 1954, as amended; the Energy Reorganization Act of 1974, as amended; and 5 U.S.C. 553; the NRC is proposing to adopt the following amendments to 10 CFR part 72.

PART 72—LICENSING REQUIREMENTS FOR THE INDEPENDENT STORAGE OF SPENT NUCLEAR FUEL AND HIGH-LEVEL RADIOACTIVE WASTE

1. The authority citation for Part 72 continues to read as follows:

Authority: Secs. 51, 53, 57, 62, 63, 65, 69, 81, 161, 182, 183, 184, 186, 187, 189, 68 Stat. 929, 930, 932, 933, 934, 935, 948, 953, 954, 955, as amended, sec. 234, 83 Stat. 444, as amended (42 U.S.C. 2071, 2073, 2077, 2092, 2093, 2095, 2099, 2111, 2201, 2232, 2233, 2234, 2236, 2237, 2238, 2282); sec. 274, Pub. L. 86–373, 73 Stat. 688, as amended (42 U.S.C. 2021); sec. 201, as amended, 202, 206, 88 Stat. 1242, as amended, 1244, 1246 (42 U.S.C. 5841, 5842, 5846); Pub. L. 95–601, sec. 10, 92 Stat. 2951 as amended by Pub. L. 10d—48b, sec. 7902, 10b Stat. 31b3 (42 U.S.C. 5851); sec. 102, Pub. L. 91–190, 83 Stat. 853 (42 U.S.C. 4332); secs. 131, 132, 133, 135, 137, 141, Pub. L. 97–425, 96 Stat. 2229, 2230, 2232, 2241, sec. 148, Pub. L. 100–203, 101 Stat. 1330–235 (42 U.S.C. 10151, 10152, 10153, 10155, 10157, 10161, 10168).

Section 72.44(g) also issued under secs. 142(b) and 148(c), (d), Pub. L. 100–203, 101 Stat. 1330–232, 1330–236 (42 U.S.C. 10162(b), 10168(c),(d)). Section 72.46 also issued under sec. 189, 68 Stat. 955 (42 U.S.C. 2239); sec. 134, Pub. L. 97–425, 96 Stat. 2230 (42 U.S.C. 10154). Section 72.96(d) also issued under sec. 145(g), Pub. L. 100–203, 101 Stat. 1330–235 (42 U.S.C. 10165(g)). Subpart J also issued under secs. 2(2), 2(15), 2(19), 117(a), 141(h), Pub. L. 97–425, 96 Stat. 2202, 2203, 2204, 2222, 2244, (42 U.S.C. 10101, 10137(a), 10161(h)). Subparts K and L are also issued under sec. 133, 98 Stat. 2230 (42 U.S.C. 10153) and sec. 218(a), 96 Stat. 2252 (42 U.S.C. 10198).

2. In § 72.214, CoC 1015 is added to read as follows:

§ 72.214 List of approved spent fuel storage casks.

* * * * *

Certificate Number: 1015.

SAR Submitted by: NAC International, Inc.

SAR Title: Final Safety Analysis Report for the NAC–UMS Universal Storage System.

Docket Number: 72–1015.

Certificate Expiration Date: November 20, 2020.

Model Number: NAC–UMS.

* * * * *

Dated at Rockville, Maryland, this 2nd day of October ,2000.

For the Nuclear Regulatory Commission.

William D. Travers,

Executive Director for Operations.

[FR Doc. 00–26888 Filed 10–18–00; 8:45 am]

BILLING CODE 7590–01–P

DEPARTMENT OF COMMERCE

Bureau of Export Administration

15 CFR Part 705

[Docket No. 000601164–0164–01]

RIN 0694–AC07

Effect of Imported Articles on the National Security

AGENCY: Bureau of Export Administration, Commerce.

ACTION: Final rule.

SUMMARY: The Department of Commerce is amending its regulation on the "Effect of Imported Articles on the National Security" to reduce the number of copies of a request or application for an investigation to be filed with the Department from 12 copies to 1 copy, plus the original, thereby reducing the burden on the applicant.

EFFECTIVE DATE: This rule is effective November 20, 2000.

FOR FURTHER INFORMATION CONTACT: Brad Botwin, Director, Strategic Analysis Division, Office of Strategic Industries and Economic Security, Room 3876,

UNITED STATES COURT OF APPEALS
FOR DISTRICT OF COLUMBIA CIRCUIT
NOV - 9 2000
RECEIVED

IN THE
UNITED STATES COURT OF APPEALS
FOR THE DISTRICT OF COLUMBIA

State of Maine, Petitioner,	)	
v.	)	No. 00-1476
Nuclear Regulatory Commission, Respondent.	)	

STATE OF MAINE'S MOTION FOR EMERGENCY STAY OF THE NUCLEAR REGULATORY COMMISSION'S RULE APPROVING THE NAC-UMS SPENT NUCLEAR FUEL STORAGE SYSTEM

Pursuant to Federal Rule of Appellate Procedure 18, Fed. R. App. Pro. 18, and 28 U.S.C. § 2349(b), the State of Maine ("State") moves for a stay of a Nuclear Regulatory Commission ("NRC") final rule amending Part 72 of its regulations, 10 CFR § 72.214. This amendment adds the NAC Universal Storage System ("NAC-UMS") to the list of approved spent nuclear fuel storage casks. 65 Fed. Reg. 62581 (October 19, 2000) (Attachment 1 hereto). Without a stay, the rule will become effective on November 20, 2000. Id. If it becomes effective, the amendment will permit Maine Yankee Atomic Power Company ("Maine Yankee") to begin loading spent nuclear fuel from its permanently shutdown nuclear power plant into NAC-UMS casks. This NRC rule violates the agency's own regulations requiring design compatibility with Department of Energy ("DOE") programs to ensure that DOE will accept and remove such spent fuel to a disposal site without additional examination or processing. Absent a binding DOE commitment to accept spent nuclear fuel that could be stored in Maine for decades in NAC-UMS

casks, the State and its citizens will be subjected to irreparable injury, including unnecessary and avoidable health and safety risks. In order to avoid those risks, the State has today petitioned this Court for review and asks the Court to stay the effective date of the NRC's rules amendment pending that review.

INTRODUCTION

The current dilemma facing states with shutdown nuclear power plants necessarily begins with DOE's well-documented breach of its statutory and contractual obligation to begin removing spent nuclear fuel from commercial power plants by January 31, 1998. See Maine Yankee v. United States, 225 F.3d 1336, 1343 (Fed. Cir. 2000); Northern States Power Co. v. United States Dep't of Energy, 128 F.3d 754, 757 (D.C. Cir. 1999). Although DOE had an unconditional obligation to begin removing spent fuel in 1998, Indiana Michigan Power Co. v. United States Department of Energy, 88 F.3d 1272, 1277 (D.C. Cir. 1996), and routinely accepts and removes spent fuel from foreign and domestic research reactors, it now publicly acknowledges that it will not even start to remove spent fuel from commercial reactors until at least 2010 -- a minimum 12-year delay. Indeed, DOE's counsel recently told a panel of the Court of Appeals for the Federal Circuit that it may be 70 years before all spent fuel is accepted and removed from commercial reactor sites such as Maine Yankee. Attachment 2 at 18-19. Unless and until the federal government addresses the unique issues facing states with shutdown plants, those states will be forced to consider the prospect of lengthy, on-site spent fuel storage (either wet in pools of circulating water or dry in concrete and steel casks) with neither the ability nor the expertise to exercise effective oversight. Shutdown plants -- like Maine Yankee -- have

begun to opt for dual-purpose dry storage/transport systems because such systems (a) enable them to decommission the remainder of the plant, including the wet storage pool that was used during operations, (b) are less costly for intermediate-term interim storage, and (c) complete the first step in preparing for removal to an appropriate storage or disposal site.

Spent fuel storage facilities require an NRC license. NRC rules grant a general dry cask storage license to existing power plant licensees so long as they adopt an NRC-certified storage system. 10 CFR § 72.210. The NRC must amend its rules to add certification of new dry storage systems. See 42 U.S.C. §§ 10153, 10198(a);10 CFR § 72.214. Most of the currently certified systems are suitable only for on-site storage and may not be used to transport fuel off-site. They consist of a sealed metal canister containing the spent fuel assemblies that is inserted in a ventilated reinforced concrete cask that is then placed on a concrete pad with other casks where they are monitored and maintained by personnel at an operating plant. See Attachment 3 for a diagram of a typical dry storage system. Natural convection keeps the canister from overheating with no mechanical cooling. When DOE finally begins accepting commercial spent fuel stored in these storage-only canisters from operating plants, the fuel will have to be removed and transferred to different transportation canisters.

In contrast, the dual-purpose NAC-UMS system is designed so that the sealed canister containing the spent fuel may be used for both storage and transport, depending on whether it is placed in a storage or transport overpack or cask. See Attachment 4 for a diagrams of the NAC-UMS system. In a significant improvement over storage-only systems, the NAC-UMS design avoids the need to open the sealed canister and transfer the fuel assemblies to a different transport canister in order to move fuel to a DOE disposal site. This dual-purpose system adds a

substantial health and safety protection because it avoids exposing workers (and possibly the public) to radiation from the spent fuel assemblies when the sealed canister is opened and the spent fuel is inspected and transferred to another container for transport. It is an especially desirable system for shutdown plants because it completes the first step in the transport process -- placement of the fuel in an NRC-licensed transport canister.

On January 21, 2000, the NRC published the proposed rule adding certification number 1015 for the NAC-UMS system to the list of approved casks and accepted comments on the proposed rule through April 5, 2000. 65 Fed. Reg. 3397 (January 21, 2000). The State (joined by the State of Connecticut) submitted timely, detailed comments. Attachment 5. The State emphasized that it

> has an acute interest in the Commission's evaluation of this application because Maine Yankee Atomic Power Company intends to use this system for long-term storage of its spent fuel following decommissioning. Based on the United State's commitments in the Nuclear Waste Policy Act, 42 U.S.C. § 10222, et seq., the State expected the Department of Energy ("DOE") to remove all spent fuel from Maine in a timely manner, thus obviating the need for any extensive storage after Maine Yankee's shutdown. Instead, it now appears that DOE may not complete removal of all Maine Yankee's spent fuel for 20 to 30 years, or perhaps much longer. Thus, whatever storage system is chosen must assure the public's safety for an extended period and must ensure that the fuel will be acceptable for removal when the DOE is finally prepared to take it years in the future.

Id. at 1.

The State expressed a number of technical concerns about the ability of the NAC-UMS system to ensure that the spent fuel remains intact during prolonged storage. Independent of those concerns, however, the State insisted that the NRC consult with and obtain approval from DOE on the acceptability of this dual-purpose system for eventual removal of the fuel from Maine.

> [T]he State of Maine hereby requests that, as a prerequisite to approving the proposed rule, the NRC acquire binding assurances from the DOE that DOE will accept spent fuel for transport and disposal that has been stored in accordance with NRC-approved procedures.

Id. The basis for this request is the NRC's legal duty to consult with DOE. See 10 CFR § 72.236(m). The State was -- and remains -- concerned that unless DOE agrees now that the NAC-UMS canisters will preserve the spent fuel for decades, intact and in an acceptable condition for transport and disposal until DOE finally removes it from the Maine Yankee site, the canisters may have to be unsealed and inspected before any fuel can move. Not only would this procedure be costly and time consuming, but it could expose workers and State employees to unnecessary radiation dose. Attachment ~~8~~ 7, ¶ 4. Moreover, so long as DOE refuses to remove Maine Yankee's spent fuel to a government storage site, thus delaying by decades DOE's acceptance and transport of all Maine Yankee's spent fuel, the State must anticipate the possibility that Maine Yankee will no longer exist and that the State will be forced to assume direct responsibility for ensuring DOE's acceptance and removal of spent fuel.

The NRC's response to the State's comments did not address the central question of whether DOE will require unsealing the canisters for further physical inspection before it will accept spent fuel at a reactor site that was stored in NAC-UMS casks for decades in compliance with NRC procedures. 65 Fed. Reg. at 62596. Rather, the NRC merely cited DOE's statutory and contractual obligation to accept spent nuclear fuel at commercial reactors, regardless of its condition, and DOE's predictable legal posturing (for the benefit of multi-billion dollar damage suits against DOE pending in the Court of Federal Claims) that it still "has every intention of fulfilling its contractual obligations." Id. Significantly for the State and in violation of its own regulations, the NRC did not request a substantive DOE review of the NAC-UMS system design

-- much less a commitment from DOE to accept and transport fuel stored in that system -- "[b]ecause the DOE's spent fuel acceptance criteria for ultimate disposal has [sic] not yet been formalized [and, therefore,] it would not be practical to preclude a storage approval on this basis at this time." Id. Thus, the NRC acknowledges that it has not considered or evaluated the health and safety consequences of its failure to require a substantive DOE review of this comprehensive storage/transport system before spent fuel is loaded and the canisters sealed.

The NRC authorized Maine Yankee to begin fabricating the NAC-UMS casks more than a year before the cask design was certified. Attachment 6. Now that the NRC has approved the final rule, Maine Yankee plans to begin loading its spent nuclear fuel into the NAC-UMS casks in April 2001. Attachment 8, ¶ 4. Maine Yankee will load about 60 canisters that will be placed in an equal number of storage casks at an Independent Spent Fuel Storage Installation ("ISFSI") located at the Wiscasset, Maine site. Id. Without a stay of the NRC's rule, Maine Yankee will load and seal storage/transport canisters that cannot be physically inspected further without opening the canister and possibly exposing workers and others to radiation. Thus, a significant expected health and safety benefit of a dual-purpose storage/transport system may be lost unless the Court stays the effectiveness of the NRC's rule.

The NRC has no procedures for seeking to stay a final rule's effective date. Nevertheless, the State did request that the NRC postpone the effectiveness of the NAC-UMS rule in order to allow appellate review. Attachment 10. The NRC denied that request. Attachment 11. Thus, on November 9, 2000, counsel notified counsel for the NRC and the Office of the Attorney General by telephone that it is filing this motion.

ARGUMENT

In determining whether to stay an agency order, the Court must consider four factors: (1) the likelihood that the party seeking the stay will prevail on the merits of the appeal; (2) the likelihood that the moving party will be irreparably harmed absent a stay; (3) the prospect that others will be harmed if the court grants the stay; and (4) the public interest in granting the stay. Cuomo v. United States Nuclear Regulatory Comm'n, 772 F.2d 972, 974 (D.C. Cir. 1985); National Ass'n of Farmworkers Orgs. v. Marshall, 628 F.2d 604, 613 (D.C. Cir. 1980); Virginia Petroleum Jobbers Ass'n v. Federal Power Comm'n, 259 F.2d 921, 925 (D.C. Cir. 1958); see Washington Metro. Area Transit Comm'n. v. Holiday Tours, Inc., 559 F.2d 841, 842-43 (D.C. Cir. 1977) (holding that a court may exercise discretion in evaluating the weight given each of the factors). Each of these factors supports issuing a stay pending review of the NRC's rule.

A. The State Is Likely to Prevail on the Merits of the Petition.

The State will show that the NRC's rule is arbitrary, capricious, an abuse of discretion, or otherwise not in accordance with law. See 5 U.S.C. § 706(2)(A). As Judge (now Justice) Scalia concluded, "[i]n order to comply with the 'procedure required by law,' 5 U.S.C. § 706(2)(D), an agency rule must be accompanied by a statement of basis and purpose, 5 U.S.C. § 553(c), which demonstrates a 'rational connection between the facts found and the choice made.'" New England Coalition on Nuclear Pollution v. Nuclear Regulatory Comm'n, 727 F.2d 1127, 1131 (D.C. Cir. 1984), quoting Burlington Truck Lines, Inc. v. United States, 371 U.S. 156, 168 (1962); see Chemical Mfrs. Ass'n v. Environmental Protection Agency, 217 F.3d 861, 865-66

(D.C. Cir. 2000) (finding arbitrary and capricious rulemaking when the offered explanation runs counter to the evidence before the agency); Troy Corp. v. Browner, 120 F.3d 277, 288 (D.C. Cir. 1997) (finding that in order to uphold a rule, there must be a reasonable connection between the facts on the record and the agency's decision). The NRC's rule does not meet this test.

The NRC's only explanation for refusing to seek any assurances from DOE is irrational on its face because the NRC focuses on DOE's ultimate disposal criteria, not on readily available transport criteria. There is no question that DOE must accept spent nuclear fuel at commercial reactor sites for disposal -- regardless of its condition. It is also true that DOE has not yet developed acceptance criteria for ultimate disposal. The existence or non-existence of ***ultimate*** disposal criteria is irrelevant, however, to whether DOE can determine now if it will accept stored spent fuel at reactor sites for ***transport*** without first requiring dual-purpose storage/transport canisters to be opened to inspect the fuel. The NAC-UMS system does not purport to provide a canister that could be used for ultimate disposal. Rather, that system assumes that spent fuel assemblies will have to be removed from their transport canisters in a specially designed facility that will be built and located at a permanent disposal site (the first of which is planned for Yucca Mountain, Nevada). As the NRC expressly recognized, however, the basic premise of the NAC-UMS system is that there will be no need to open the dual-purpose canisters at the time when DOE arrives at the reactor site to begin accepting and removing spent fuel, thereby avoiding exposing workers and the environment to highly radioactive spent fuel. See 65 Fed. Reg. at 62596. So long as DOE does not insist on a physical inspection of the fuel, the fact that the storage canister is the same as the transport canister means that it can simply be

transferred from a storage cask to a transport cask without subjecting workers or the public to avoidable risks.

By failing to take the reasonable step of soliciting DOE review and approval of the system's design, however, the NRC rule jeopardizes the fundamental safety and efficiency principle that underlies the NAC-UMS concept. Before accepting spent fuel at the reactor site for transport, DOE will be free to second-guess the NRC's determinations and demand that storage/transport canisters be opened and inspected to determine whether the fuel or its cladding has deteriorated over the decades of storage. Indeed, the DOE letter to Governor King, on which the NRC relies for DOE's purported assurances, 65 Fed. Reg. at 62596, expressly warns that DOE may delay accepting spent fuel even further if questions about the fuel's condition require it "to address any technical issues that may be related to the fuel's safe handling and disposal." Attachment 12. The longer that DOE postpones discharging its obligation to remove spent fuel (even to one of its many interim storage sites, as it does now for research fuel), the more likely DOE will be to demand additional investigation of "technical issues" that can and should be resolved before loading fuel in storage/transport canisters. The NRC unreasonably -- and in violation of its own regulations -- refused to obtain DOE commitments at the stage when DOE's response would indicate whether future, potentially serious health and safety consequences can be avoided and which entity (federal or state) will bear any attendant financial burden.

Indeed, the NRC's own rules require it to evaluate storage system designs for compatibility with DOE's eventual removal of spent fuel: "To the extent practicable in the design of spent fuel storage casks, consideration should be given to compatibility with removal of the stored spent fuel from a reactor site, transportation, and ultimate disposition by the

Department of Energy." 10 CFR § 72.236(m). The NRC has offered no logical explanation for refusing to take the rational precaution of obtaining DOE approval of the design before sealing canisters that are intended to remain intact throughout the interim storage and transportation phases of spent fuel disposition. Thus, there is a substantial likelihood that the Court will find that the NRC's approval of the rule was arbitrary and capricious.

B. The State Will Be Irreparably Injured Without a Stay.

Once Maine Yankee loads its spent fuel in NAC-UMS canisters and welds them shut -- now expected to begin in April 2001 -- it will be too late for the NRC to consult with and obtain approval from DOE for this storage/transport system, and the State will be irreparably harmed. Any questions that DOE might have at that point about the capabilities of the NAC-UMS system to maintain spent fuel in an acceptable condition for decades may only be resolved by breaching the radiation containment barrier that the canister provides. Because it has not been consulted and has not approved the NAC-UMS system, DOE is in a legal posture to reject Maine Yankee's spent fuel for transport unless and until the storage/transport canisters are opened and the fuel physically inspected to determine its condition at the time of acceptance. This will place an intolerable burden on the health and safety of Maine's citizens and create an additional costly burden on taxpayers, ratepayers or both.

One primary health and safety advantage of the proposed NAC-UMS system is the ability to move from storage to transport with minimal potential radiation hazard. The NAC-UMS system permits the dual-purpose canister to be removed from the storage cask into a shielded transfer cask and to be placed directly in a shielded transport cask without ever exposing the fuel.

Attachment 8, ¶ 3. If the canister has to be unsealed and inspected before it can be transported, however, this substantial benefit will be lost. The storage/transport canister will have to be placed in a "hot cell" that is specially designed to handle exposed fuel. Id. ¶ 4. To the extent that the fuel (or the metal cladding that covers the fuel pellets in each fuel rod) has deteriorated, the particles will have to be carefully contained within the hot cell and transferred to a new transport canister. Id. These additional steps -- which could be avoided if DOE unequivocally agrees now that it is satisfied with the canister design and will accept fuel stored for transport in the NAC-UMS canisters "as is" -- create possibilities for radiation exposure to workers or the public (as well as significant additional expense). Moreover, the State will be required to take precautions against and respond to any radiation hazards caused by the NRC's failure to obtain DOE's concurrence in Maine Yankee's use of the NAC-UMS system. The State and its citizens will be irreparably harmed if Maine Yankee proceeds to seal its spent fuel in storage/transport canisters that have not been approved by DOE for its acceptance and transport.

The existence of a separate, still-pending NRC licensing procedure (10 CFR, Part 71) for the transport portion of the NAC-UMS system does nothing to mitigate the imminent harm to the State's interests. The harm occurs when Maine Yankee begins to seal its fuel in canisters for storage (as it plans to do in April 2001) when those same sealed canisters will be used for transport. It will do no good for the NRC to solicit DOE's approval of the storage/transport design after the die has already been cast and fuel has been loaded in dual-purpose canisters. At that stage, the only remedy for a significant DOE concern would require unsealing the canisters. If DOE has any doubts about its unconditional willingness to accept and transport spent fuel stored in NAC-UMS canisters, the NRC must resolve them before fuel goes into the canisters.

Nor is it satisfactory for the NRC to defer soliciting DOE's approval until Maine Yankee seeks an amendment to the rule applicable to its specific site. Such a site-specific proceeding will not consider generic design issues that the NRC foreclosed when it approved the general rule. In order to avoid irreparably harming the State's interests, the NRC must solicit and secure DOE's endorsement of the dual-purpose NAC-UMS design now, in this rulemaking, or there will be no other meaningful opportunity.

C. A Stay Will Not Harm Other Parties.

No other parties will be harmed by the requested stay. First, there could be no harm to the NRC from a further delay to permit this Court's review. The NRC took 32 months to review NAC International, Inc.'s ("NAC's") request for certification of the NAC-UMS system and even delayed six months after receiving the State's comments before publishing its final rule. The NRC will further -- not hinder -- its health and safety goals by delaying the effective date of its rule to ensure that the proposed storage/transport system will meet its designed objectives. Second, NAC, the cask vendor, will not be harmed by any stay. It may continue to fabricate the system's components for Maine Yankee pursuant to the NRC's earlier authorization and will simply continue to assume the same risk that the NRC may impose requirements that will have to be incorporated in already-fabricated casks. See Attachment 6 at 2.

Finally, Maine Yankee will not be harmed by a stay pending review of the NRC's rule. At most, Maine Yankee will incur some additional short-term cost if it is not able to begin loading spent fuel in April 2001. Maine Yankee may even recover from the effects of that delay, however, because spent fuel loading is expected to continue through August 2002, thus affording

ample opportunity to make up any time that might be lost in beginning fuel loading. Moreover, under a settlement approved by the Federal Energy Regulatory Commission, Maine Yankee is entitled to recover all of its prudently incurred costs for decommissioning, including the reasonable costs of spent fuel storage. Attachment 9, ¶¶ 4-5. Maine Yankee will be fully reimbursed for any justifiable costs necessitated by a delay in approval of the dry cask storage system. A delay in the effectiveness of the NRC rule to permit DOE approval may also avoid the substantial additional costs that would be incurred to unseal the storage/transport canisters and inspect the fuel decades hence.

D. A Stay Is in the Public Interest.

The public interest supports the State's request for a stay to permit the Court to review the health and safety implications of the NRC's rule. If the rule becomes effective and Maine Yankee proceeds to load and seal spent fuel canisters, the public's right to an independent examination of the NRC's actions will be forever lost as to those sealed canisters. It is not in the public interest to permit a rule to become effective that will allow sealed spent fuel canisters to be opened solely because the NRC failed to consult with and obtain unequivocal approval from DOE before the canisters were loaded. The public interest will be served by a stay that can obviate the need for worker or public exposure to avoidable radiation hazards.

CONCLUSION

For the reasons stated, the Court should grant the State's emergency motion before the NRC's rule approving the NAC-UMS spent fuel storage system becomes effective on November 20, 2000, and stay the rule's effectiveness pending this Court's review.

Randall L. Speck, Esq.
D.C. Bar Number 942607
Kaye, Scholer, Fierman,
Hays & Handler, LLP
901 Fifteenth Street, N.W.
Washington, D.C. 20005
Tel. (202) 682-3500
Fax. (202) 682-3580

By: _____
Counsel for the State of Maine

Date: November 9, 2000

CERTIFICATE OF SERVICE

I hereby certify that on this 9th day of November 2000, copies of the foregoing Motion for Emergency Stay of the Nuclear Regulatory Commission's Rule Approving the NAC-UMS Spent Nuclear Fuel Storage System were served by hand delivery upon the following:

John F. Cordes, Jr.
Solicitor, Office of General Counsel
U.S. Nuclear Regulatory Commission
One White Flint North
Rockville, MD

Richard A. Meserve
Chairman
U.S. Nuclear Regulatory Commission
One White Flint North
Rockville, MD

David L. Meyer
Chief, Rules and Directives Branch
Office of Administration
U.S. Nuclear Regulatory Commission
One White Flint North
Rockville, MD

Janet Reno
United States Attorney General
U.S. Department of Justice
810 Seventh Street, N.W.
Washington, D.C. 20531

James Kilbourne
Environmental Appellate Section
Department of Justice
Patrick Henry Building
601 D Street, N.W.
Room 8046
Washington, D.C. 20530

Further, I hereby certify that on this 9th day of November 2000, copies of the foregoing Motion for Emergency Stay of the Nuclear Regulatory Commission's Rule Approving the NAC-UMS Spent Nuclear Fuel Storage System were served by overnight Federal Express delivery upon the following commenters to the proposed rule:

Thomas C. Thompson

Licensing & Competitive Assessment
NAC International, Inc.
655 Engineering Drive
Norcross, GA 30092

Fawn Shillinglaw
1952 Palisades Dr.
Appleton, WI 54915

Honorable J.G. Rowland
Governor, State of Connecticut
State Capital
Hartford, Connecticut 06106

David C. Jones
NAC Nuclear Technology Users Group
526 South Church Street
EC08F
Charlotte, N.C. 28078

George A. Zinke
Nuclear Safety and Regulatory Affairs
Maine Yankee Atomic Power Company
321 Old Ferry Road
Wiscasset, ME 04578-4922

Gregg R. Overbeck, Sr. V.P.
Arizona Public Service at Paloverde Nuclear Generating Station
Mail Station 7602
P.O. Box 52034
Phoenix, AZ 85072

Sean M. Dunn

Doc #13014546.WPD

Done in Washington, DC, on: October 12, 2000.

Thomas J. Billy,

Administrator.

[FR Doc. 00–26658 Filed 10–18–00; 8:45 am]

BILLING CODE 3410–DM–P

NUCLEAR REGULATORY COMMISSION

10 CFR Part 72

RIN 3150–AG32

List of Approved Spent Fuel Storage Casks: NAC–UMS Addition

AGENCY: Nuclear Regulatory Commission.

ACTION: Final rule.

SUMMARY: The Nuclear Regulatory Commission (NRC) is amending its regulations to add the NAC Universal Storage System (NAC–UMS) cask system to the list of approved spent fuel storage casks. This amendment allows the holders of power reactor operating licenses to store spent fuel in this approved cask system under a general license.

EFFECTIVE DATE: This final rule is effective on November 20, 2000.

FOR FURTHER INFORMATION CONTACT: Stan Turel, telephone (301) 415–6234, e-mail spt@nrc.gov of the Office of Nuclear Material Safety and Safeguards, U.S. Nuclear Regulatory Commission, Washington, DC 20555–0001.

SUPPLEMENTARY INFORMATION:

Background

Section 218(a) of the Nuclear Waste Policy Act of 1982, as amended (NWPA), requires that "[t]he Secretary [of Energy] shall establish a demonstration program, in cooperation with the private sector, for the dry storage of spent nuclear fuel at civilian nuclear reactor power sites, with the objective of establishing one or more technologies that the [Nuclear Regulatory] Commission may, by rule, approve for use at the sites of civilian nuclear power reactors without, to the maximum extent practicable, the need for additional site-specific approvals by the Commission." Section 133 of the NWPA states, in part, "[t]he Commission shall, by rule, establish procedures for the licensing of any technology approved by the Commission under Section 218(a) for use at the site of any civilian nuclear power reactor."

To implement this mandate, the NRC-approved dry storage of spent nuclear fuel in NRC-approved casks under a general license, publishing a final rule in 10 CFR part 72 entitled "General License for Storage of Spent Fuel at Power Reactor Sites" (55 FR 29181; July 18, 1990). This rule also established a new Subpart L within 10 CFR part 72 entitled, "Approval of Spent Fuel Storage Casks" containing procedures and criteria for obtaining NRC approval of dry storage cask designs.

Discussion

This rule will add the NAC–UMS cask system to the list of approved spent fuel storage casks in 10 CFR 72.214. Following the procedures specified in 10 CFR 72.230 of subpart L, NAC International (NAC) submitted an application for NRC approval with the Safety Analysis Report (SAR) entitled, "Safety Analysis Report for the NAC UMS Universal Storage System." The NRC evaluated the NAC submittal and issued a preliminary Safety Evaluation Report (SER) and a proposed Certificate of Compliance (CoC) for the NAC–UMS cask system. The NRC published a proposed rule in the **Federal Register** (64 FR 45918; August 23, 1999) to add the NAC–UMS cask system to the listing in 10 CFR 72.214. The comment period ended on April 5, 2000. Seven comment letters were received on the proposed rule.

Based on NRC review and analysis of public comments, the NRC has modified, as appropriate, its proposed CoC and the Technical Specifications (TS) for the NAC–UMS cask system. The NRC has also modified its SER in response to some of the comments.

The NRC finds that the NAC–UMS cask system, as designed and when fabricated and used in accordance with the conditions specified in its CoC, meets the requirements of 10 CFR part 72, subpart L. Thus, use of the NAC–UMS cask system, as approved by the NRC, will provide adequate protection of public health and safety and the environment. With this final rule, the NRC is approving the use of the NAC–UMS cask system under the general license in 10 CFR part 72, subpart K, by holders of power reactor operating licenses under 10 CFR part 50. Simultaneously, the NRC is issuing a final SER and CoC that will be effective on November 20, 2000. Single copies of the final CoC and SER will be available by November 2, 2000 for public inspection and/or copying for a fee at the NRC Public Document Room (PDR), 11555 Rockville Pike, Rockville, Maryland and electronically at *http://ruleforum.llnl.gov.*

Documents created or received at the NRC after November 1, 1999, are also available electronically at the NRC's Public Electronic Reading Room on the Internet at *http://www.nrc.gov/NRC/ADAMS/index.html.* The public can gain entry from this site into the NRC's Agency wide Document Access and Management System (ADAMS), which provides text and image files of the NRC's public documents. An electronic copy of the final CoC, Technical Specifications, and SER for the NAC–UMS cask system can be found in ADAMS under Accession No. ML003737374. However, because the NRC must incorporate the date of publication of this **Federal Register** notice into the CoC, these documents are not yet publicly available. The NRC will make these documents publically available by November 2, 2000. Contact the NRC PDR reference staff for more information. PDR reference staff may be reached at 1–800–397–4209, 301–415–4737, or by e-mail at *pdr@nrc.gov.*

Summary of Public Comments on the Proposed Rule

The NRC received seven comment letters on the proposed rule. The commenters included two utilities, an NAC–UMS cask users group, two States, and two members of the public. Copies of the public comments are available for review in the NRC Public Document Room, 11555 Rockville Pike, Rockville, MD and electronically at *http://ruleforum.llnl.gov.*

Comments on the NAC–UMS Cask System

The comments and responses have been grouped into nine subject areas: general, radiation protection, accident analysis, design, welds, structural, thermal, technical specifications (TS), and miscellaneous issues. Several of the commenters provided specific comments on the draft CoC, NRC's preliminary SER, and TSs. To the extent possible, all of the comments on a particular subject are grouped together. The NRC's decision to list the NAC–UMS cask system within 10 CFR 72.214, "List of approved spent fuel storage casks," has not been changed as a result of the public comments. A review of the comments and the NRC's responses follow:

A. General

Comment A–1: One commenter noted the regulatory analysis indicates that issuing a site-specific license would cost the NRC and the utility more time and money than the proposed action. The commenter asked for proof of this statement and suggested that a study or evaluation should be done. The commenter considers that in the long run it costs the NRC more time and

money to make all the site-specific changes needed later. Further, if each cask were site-specific, the vendor and utility would pay for a thorough analysis before presentation to the NRC, rather than the NRC "fixing up" everything at taxpayer expense after certification for a general license.

Response: The NRC disagrees with the comment. The scope of an NRC review of a cask design to be added under the listing of 10 CFR 72.214 is enveloped by the NRC review efforts to license that same cask design for a site-specific license. The NRC's review of that same cask design for a site-specific license also includes, but is not limited to, evaluations of siting factors, licensee financial qualifications, physical protection provisions, emergency plan provisions, the quality assurance program and the decommissioning plan. Clearly, and as stated in the regulatory analysis, the NRC and licensee costs would increase to conduct multiple site-specific reviews associated with the use of the same cask design.

Conducting site-specific reviews would ignore the alternative procedures and criteria currently in place for the addition of new cask designs that can be used under a general license and would be in conflict with the NWPA direction to the NRC to approve technologies for the use of spent fuel storage at the sites of civilian nuclear power reactors without, to the maximum extent practicable, the need for additional site reviews. It also would tend to exclude new vendors from the business market without cause and would arbitrarily limit the choice of cask designs available to power reactor licensees. Also, because of the long experience with the CoC process and other similar processes the NRC has determined that site-specific licensing would be inefficient because of the significant number of amendments that would have to be processed and therefore would add to the costs of granting CoCs rather than being more efficient.

Prior to storing spent fuel under the general license, each licensee must perform written evaluations to establish that: (1) The conditions set forth in the CoC have been met; (2) the reactor site parameters are encompassed by the cask design bases considered in the cask SAR and SER; and (3) other requirements detailed in 10 CFR 72.212 have also been met. Each general licensee must retain a copy of these written evaluations until spent fuel is no longer stored under the general license. Furthermore, these written evaluations may be inspected at any time by NRC staff.

The NRC's fee recovery structure in 10 CFR Parts 170 and 171 for the conduct of licensing and regulatory oversight activities under 10 CFR Part 72 does not differentiate between the type of license used (*i.e.*, general or specific).

Comment A–2: One commenter commented that the proposed rules for casks and the environmental assessments have become almost a "fill in the blank" form, and said that this needs rethinking. The commenter also made several general statements about the overall waste program and that everything is going too fast, spent fuel pools are filling to capacity, more cask designs being built by more inexperienced workers with the cheapest materials. The commenter suggested that the NRC examine the program and carefully evaluate the end result.

Response: This comment is beyond the scope of this rule that is focused solely on whether to add a particular cask design, the NAC–UMS cask system, to the list of approved casks. However, since the beginning of the CoC rulemaking process, the NRC and Congress have continuously evaluated the direction and progress of the program with the primary consideration continuing to be the health and safety of the public.

Comment A–3: One commenter cited a news article stating that one utility is seeking an accelerated licensing review and approval schedule for storage of fuel in the NAC–UMS, and was concerned that there may be pressure because of the schedule. The commenter asked how much public comment is valued when the public knows the approval needs to be completed as fast as possible. The commenter stated that NRC's job is to ensure public and worker safety.

Response: This comment is beyond the scope of this rule that is focused solely on whether to add a particular cask design, the NAC–UMS cask system, to the list of approved casks. However, since the beginning of the CoC rulemaking process, the NRC and Congress have continuously evaluated the direction, progress, and schedules of the program with the primary consideration continuing to be the health and safety of the public. The public comment and response procedure has always been and will continue to be an important part of the rulemaking process.

Comment A–4: One commenter did not receive the reference section as listed in the Table of Contents for the SER and asked why. The commenter stated that the references and dates are important and that the public wants these references and dates. However, the references are often dated from the 1970's causing concern to the commenter. The commenter requested the missing pages from the SER.

Response: The NRC separately provided the reference section of the SER issued with the preliminary SER to the commenter. The NRC had appropriately included the dates of references in the preliminary SER, and is uncertain why the commenter did not receive this section.

Comment A–5: One commenter noted differences between NAC–MPC and NAC–UMS and stated that the terms "multipurpose" and "universal" are not explained. The commenter stated the casks are for storage only at this point and that is what they should be called in the documents.

Response: Similarities or differences between the NAC–UMS cask design under consideration and any other cask design are beyond the scope of this rulemaking. The terms "universal" and "multi-purpose" have been selected by the applicant as descriptive of the system's design flexibility. The NRC agrees with the commenter that the NAC–UMS cask design evaluated in this rulemaking is limited to its acceptability for storage. However, the NRC does not consider descriptive nomenclature of the intended use beyond storage to be inappropriate.

Comment A–6: One commenter asked what the "M" in UMS stands for and why is it not USS for Universal Storage System.

Response: The NAC–UMS is the model name selected by the vendor. UMS stands for "Universal MPC System," where MPC is intended to indicate "multi-purpose canister."

Comment A–7: One commenter agreed with one of the State's published comments. Several comments also were made on topics pertaining to the decommissioning of the Maine Yankee site.

Response: The agreement with the State's published comments was noted. The State's comments in their entirety have been considered within this section. The comments pertaining to the decommissioning of the Maine Yankee site are outside the scope of this rule.

B. Radiation Protection

Comment B–1: One commenter disagreed with the SER statement that it is unnecessary for the applicant to specify the source term for the confinement analyses and stated that the source term and corresponding dose consequence should be provided to the public in these documents. The

commenter stated there is no reason not to require this information that the NRC may need to know in the future.

Response: The NRC disagrees with the comment. Revision 1 of Interim Staff Guidance (ISG) No. 5, "Confinement Evaluation" specifies that for storage casks having closure lids that are designed and tested to be leak tight as defined in "American National Standard for Leakage Tests on Packages for Shipment of Radioactive Materials," American National Standards Institute (ANSI) N14.5–1997, detailed confinement analyses are not necessary. Therefore, the applicant is not required to provide a detailed analysis of the leakage of radioactive materials through the welded canister. As indicated in SAR Section 7.1, the confinement boundary is completely welded and inspected in accordance with both the American Society of Mechanical Engineers (ASME) Code and ISG No. 4, "Cask Closure Weld Inspections," and is leak tested to ANSI leaktight standards. Further, the analyses presented in the SAR demonstrated that the stresses, temperatures, and pressures of the Transportable Storage Canister (TSC) are within the design basis limits under the accident conditions identified by the applicant and that the confinement boundary of the TSC remains intact for all credible accidents. The NRC concurs with the evaluation in the SAR and believes that the design of the confinement boundary, that includes the inspection of welds is adequately rigorous and meets the applicable regulations.

Comment B–2: One commenter asked if there is an explanation in the SAR of detailed plans for how to dispose of the radioactive gases purged from the canister with nitrogen during unloading. The commenter asked if the disposal process has been clearly thought out so it could be performed the day after a cask is loaded, if necessary, and all personnel would know the process.

Response: SAR Chapter 8 includes guidance for the development of site-specific operating procedures to be followed for unloading the TSC and includes consideration of the radioactive gases purged from the canister. The canister to be unloaded will be flushed with nitrogen gas to remove any accumulated radioactive gases prior to initiating fuel cooldown. The amount of radioactive gases displaced by the nitrogen gas is first assessed by sampling to determine the appropriate radiological controls. Any radioactive gaseous effluent released from the canister would be processed through High-Efficiency Particulate Air (HEPA) filters and any additional filtration systems a facility may have in order to filter the air from a fuel handling building or reactor building. All radioactive effluents released to the environment must meet Federal and State regulations.

Comment B–3: One commenter asked if the high peak dose rates could be reduced in some way for the transfer cask top during shield lid welding, the top of the transfer cask containing a sealed canister filled with Boiling Water Reactor (BWR) fuel, and the bottom of the transfer cask with a canister filled with Pressurized Water Reactor (PWR) fuel.

Response: The high peak dose rates are based upon loading the design basis fuel and present the worst case scenario for estimating doses to workers. The actual doses received by workers should be less than the calculated doses because the actual fuel loaded may have a longer cooling time and a different, lower burnup. Under the facility's as low as reasonably achievable (ALARA) does exposure program, the licensee will have to evaluate ways to reduce the dose to those who will be working with the cask. For example, temporary shielding could be used to reduce dose to workers.

Comment B–4: Three commenters noted that the Completion Time for Required TS Action A.1 of Limiting Condition for Operation (LCO) 3.2.1 (Decontamination of Canister Surface Contamination) is unnecessarily restrictive. The commenters request that the Completion Time be revised to 25 days because this LCO is not time dependent.

Response: The NRC disagrees with this comment. The applicant evaluated and proposed the 7-day time frame. During the review process, the staff evaluated and found acceptable the applicant's proposal. The NRC found the 7-day completion time reasonable to decontaminate the surface if contamination on the canister or transfer cask is identified. The commenters did not provide adequate justification for revising the LCO. If there is surface contamination on the canister or transfer cask, then it is good health physics practice to decontaminate the surface as soon as practicable but within the seven day completion time.

Comment B–5: Three commenters stated that the Completion Time for Required Action A.2 of LCO 3.2.2 (Concrete Cask Average Surface Dose Rates) is unnecessarily restrictive, and request that the Completion Time be revised to 25 days.

Response: The NRC disagrees with this comment. The applicant evaluated and proposed the 7-day time frame. During the review process, the NRC evaluated and found acceptable the applicant's proposal. The NRC found the 7-day completion time reasonable to verify compliance with the regulations. The comment did not provide adequate justification for revising the LCO.

Comment B–6: Two commenters noted that the radiological dose to adjacent controlled or noncontrolled site areas is based on 20 loaded vertical storage modules (Preliminary Safety Evaluation Report [PSER] Sections 10.3 and 10.4), and that the prototypical modules are arranged in two rows with ten storage modules per row. The commenters stated this assumption is unrealistic in Independent Spent Fuel Storage Installations (ISFSIs) that support the complete decommissioning of an operating nuclear power plant where there may be 50 or more modules. The more storage modules, the greater the sky shine interaction that is available at the boundary of the site control area and the greater the onsite occupational dose. The commenters stated that the PSER does not analyze the more typical module configurations and, thus, does not meet the requirements of 10 CFR 72.236(d).

Response: NRC disagrees with this comment. This application is for a general license and therefore a generic approach has been taken in evaluating the doses to site workers and the public. Prior to a general licensee using this cask, the licensee is required to meet the conditions stated in 10 CFR 72.212. Specifically, 10 CFR 72.212(b)(2)(iii) states that the requirements in 10 CFR 72.104 (the criteria for radioactive materials in effluents and direct radiation from an ISFSI or Monitored Retrievable Storage Facility (MRS)) must be met. Therefore, to demonstrate compliance with 10 CFR 72.104, the § 72.212 evaluation will have to contain a dose evaluation for the ISFSI site that includes the actual number and arrangement of storage canisters.

Comment B–7: One commenter stated that compliance with required actions A.1 and A.2 for LCO 3.2.2 in the TS does not either restore compliance with the LCO or allow exiting the LCO. LCO 3.2.2 in the TS contains limits for the average surface dose rates of each concrete cask during loading operations. Surveillance requirement (SR) 3.2.2.1 requires that the average surface dose rates be measured once after completion of transfer of a loaded canister into the concrete cask and before beginning storage operations. Condition A and required actions A.1 and A.2 for this LCO state that if the concrete average surface dose rate limits are not met, the

licensee must administratively verify correct fuel loading, and perform analysis to verify compliance with the ISFSI offsite radiation protection requirements of 10 CFR Parts 20 and 72. However, there is no provision in this LCO to allow the loaded concrete cask to be stored in the ISFSI after actions A.1 and A.2 are completed satisfactorily. The LCO does not provide for any course of action after actions A.1 and A.2 are completed. SER Sections 5.4.3 and F5.3 state that the final determination of compliance with 10 CFR 72.104(a) is the responsibility of each applicant for a site license. Section 10.1.1 states that, as required by 10 CFR 72.212, a general licensee will be responsible for demonstrating site-specific compliance with 10 CFR part 20 and §§ 72.104 and 72.106 requirements. The intent of LCO 3.2.2 is that a licensee may store a cask that does not meet the LCO average surface dose rate limits as long as the licensee completes an analysis showing compliance with 10 CFR parts 20 and 72 limits at the ISFSI. Therefore, in order for required actions A.1 and A.2 to restore compliance with the LCO, the LCO should state: "The average surface dose rates of each Concrete Cask shall not exceed the following limits unless required actions A.1 and A.2 are met."

Response: NRC agrees with this comment. LCO 3.2.2 has been revised.

Comment B–8: One commenter asked why there is axial reflection of neutrons from one tube to another bypassing the poison panels under full or partial flooding, and how this affects analysis. The commenter stated that if the NRC does not support NAC's claim that the infinite-length approximation adds conservatism, it should be removed.

Response: Although the NRC does not concur with NAC's statement that the infinite-length model adds conservatism, removal of the statement from the SAR is not necessary because the statement does not affect the overall conclusions of the safety analysis. The axial reflection of neutrons from one tube to another occurs when neutrons leaving the end of one fuel tube are scattered into another fuel tube by water, fuel hardware, or cask materials located beyond the ends of the poison panels. This phenomenon provides a neutron pathway between assemblies that is not considered in infinite-length models of the fuel and cask. The NRC's analysis shows that the resulting small increase in the computed reactivity roughly balances the small reactivity decrease arising from axial neutron leakage, which is likewise neglected in NAC's infinite-length model. The NRC therefore views the infinite-length approximation as neutral; *i.e.*, it neither adds nor subtracts conservatism.

C. Accident Analysis

Comment C–1: One commenter noted that the thermal accident is postulated with 50 gallons of transporter fuel burning for 8 minutes and suggested that an evaluation for a possible jet crash and associated fire be performed.

Response: The NRC staff's standard review plan for dry cask storage systems, Chapter 11 "Accident Analysis," specifies that structures, systems, and components important to safety must be designed to withstand credible accidents and natural phenomena events. A cask transporter fire is considered credible for the NAC–UMS cask design, and is the basis for the 8-minute fire associated with the time it would take to burn 50 gallons of fuel. Other modes of transport causing the fire (such as airplanes, trains, and delivery trucks) are not considered plausible for this cask design and are beyond the scope of this rule. However, before using the NAC–UMS cask, the general licensee must evaluate the site to determine if the chosen site parameters are enveloped by the design bases of the approved cask as required by 10 CFR 72.212(b)(3). The licensee's site evaluation should consider the effects of nearby transportation and military activities. Also included in this evaluation is the verification that the cask handling equipment used to move the Vertical Concrete Cask (VCC) to the pad is limited to 50 gallons of fuel (as detailed in Technical Specification B 3.4.5–Site Specific Parameters and Analyses).

Comment C–2: Three commenters requested that LCO 3.1.7 (Fuel Cooldown Requirement) be deleted from the TS because there are no design basis accidents that require fuel cooldown for removal from a sealed canister. The commenters believed that the applicant demonstrated that cooldown can be performed as shown by the "Thermal Evaluation" section of NUREG–1536, "The Standard Review Plan for Dry Cask Storage Systems, January, 1997" and that if the fuel cooldown requirements cannot be removed from the TS, the cooldown requirements should be moved to the "Administrative Controls and Programs" section.

Response: The NRC agrees with the comment that the TS A 3.1.7, "Fuel Cooldown Requirements" associated with canister unloading procedures can be deleted from the TS. The NRC agrees that this would be a highly unlikely scenario that could be adequately controlled by approved site-specific operating procedures developed based on the technical basis contained in SAR Chapter 8. Reuse of the canister after unloading would not be likely. The fuel would be returned to the spent fuel pool for subsequent dry cask storage in another canister and/or transport.

Comment C–3: One commenter asked a number of questions related to the Boral panels regarding the continued efficiency over time, the number of casks that have utilized Boral, how the Boral is manufactured and tested, and whether the panels can structurally deform.

Response: Boral has been used in the nuclear industry since the 1950's and has been used in spent fuel storage and transportation cask baskets since the 1960's. Several utilities have also used Boral in spent fuel pool storage racks. Industry experience has revealed no credible mechanisms for a loss of Boral efficacy in the cask. Therefore, the NRC has reasonable assurance that the Boral panels in the PWR and BWR baskets of the TSC will perform their intended criticality function throughout the licensed storage period.

Each Boral panel is held in place by a stainless steel cover plate, that is welded around its perimeter to the outer wall of the fuel tube. As noted in SAR Section 6.1, criticality control in the PWR basket is achieved by surrounding the fuel assemblies with four panels of Boral for each fuel assembly. In the BWR basket, single panels of Boral placed between each fuel assembly are used for criticality control.

Boral will be manufactured and tested under the control and surveillance of a quality assurance and quality control program that conforms to the requirements of 10 CFR Part 72, Subpart G. A statistical sample of each manufactured lot of Boral is tested by the manufacturer using wet chemistry procedures and/or neutron attenuation techniques. The specified minimum content of the neutron poison in the Boral panels (*i.e.*, 0.025 grams of B^{10} per cm^2 for the PWR basket and 0.011 grams of B10 per cm2 for the BWR basket) is ensured by the acceptance testing procedures described in SAR Section 9.1.6.

Comment C–4: One commenter noted that the NRC had reviewed the Boral vendor's product literature and believed this should be done for all materials because most cask vendors do not review this information. The commenter stated that nonstandard Boral sheets, are an area where mistakes may be made and verifications are not performed. The commenter asked why NAC was not "up front" with the issue of using nonstandard Boral sheets.

Response: The NRC disagrees that most vendors do not review material specifications selected for use within cask designs. The vendor is responsible for implementing a quality assurance program. The NRC expects that the material used in the cask systems meets minimum design specifications. The NRC has no specific information that this or other vendors do not properly specify and confirm material properties. Furthermore, the NRC does specifically evaluate and consider the materials utilized in a proposed cask design. Regarding the use of "non-standard" Boral sheets, the vendor had already committed to obtaining a specific B^{10} loading for the neutron absorbers, both in the SAR and as stipulated in the design features section of the TS. The NRC's safety evaluation fully describes the basis for the NRC's acceptance.

Comment C–5: One commenter expressed a concern about the possible production of hydrogen from the aluminum heat transfer disks during loading and unloading operations.

Response: The NRC has considered the possible production of hydrogen in its evaluation. As noted in SAR Section 3.4.1.2.2, the applicant anticipates that no hydrogen gas is expected to be detected prior to, or during, the loading or unloading operations. However, if a reaction between the aluminum heat transfer disks and the spent fuel pool water occurs, the loading and unloading procedures of SAR Chapter 8 that include procedures to detect and remove hydrogen from the space between the shield lid and the top of the water during any welding or cutting operations, provide adequate assurance that the welders will be protected. Further, the NRC has licensed other storage casks that utilize aluminum heat transfer components.

Comment C–6: Two commenters stated that the NAC–UMS system does not provide for a capability to verify periodically whether or not the storage conditions have changed, thus requiring canning or other remedial measures for fuel that has developed further damage during storage. The commenters stated that the fuel-containing canisters may need to be opened periodically in a hot cell and visually inspected, and that an ISFSI using the NAC–UMS system may require such a facility because the canisters may not be shipped under 10 CFR Part 71 without verification of fuel rod integrity. The commenters stated that the PSER should define verification requirements for the NAC–UMS system prior to shipment under Part 71 and evaluate the applicant's verification methods.

Response: The NRC disagrees with the comment. The NRC, with the issuance of Interim Staff Guidance (ISG) No. 1, "Damaged Fuel" addressed the definition of damaged fuel and clarified the fuel conditions for which spent fuel should be placed in cans prior to storage for the purposes of retrievability. The NAC–UMS storage cask application, as considered in this rulemaking, did not seek approval for the storage of damaged fuel as defined in ISG–1. Additionally, both the design of the NAC–UMS system and the thermal, structural, and criticality analyses ensure that the fuel will not be disrupted under normal, off-normal and accident conditions once undamaged, or intact, fuel is placed into a storage canister. Further, the results of a cask demonstration program at Idaho National Engineering and Environmental Laboratory (INEEL) (where determinations were made of the effects of dry storage casks on spent fuel integrity) showed that there were no significant fuel failures that would require extraordinary handling of the fuel. Therefore, the NRC staff has reasonable assurance that the spent fuel is adequately protected against degradation that might otherwise lead to gross rupture during storage. As such, periodic verification of cladding conditions during the storage period or prior to transportation is not warranted.

Regarding requirements associated with the safe transportation of spent fuel under 10 CFR Part 71, it is appropriate to establish the necessary conditions that ensure the health and safety of the public under the conditions of the 10 CFR Part 71 CoC. A 10 CFR Part 72 storage cask design certification does not serve to authorize the shipment of the stored contents under 10 CFR Part 71. NRC does an independent evaluation of casks for shipping under 10 CFR Part 71. Similarly, conditions of any approval under 10 CFR Part 71 are independent of necessary conclusions pertaining to a cask design's capability to meet the requirements of 10 CFR Part 72 for storage.

Comment C–7: Two commenters raised concerns about the radiation hardening of borated neutron absorber materials, including the NS-4-FR neutron shield employed in the NAC–UMS storage cask. The commenters stated there is no evidence and no analysis in the PSER to establish NS-4-FR's ability to maintain form over the expected lifetime integrated neutron flux.

Response: The NRC has reasonable assurance that NS-4-FR will maintain its form over the expected lifetime integrated gamma and neutron doses. Independent laboratory tests of the NS-4-FR material have demonstrated that radiation exposures significantly higher than those of any neutron shield component of the NAC–UMS system have not resulted in any physical deterioration of the neutron shield material. Calculations have shown that over 500 continuous years of exposure to a design basis neutron source would have to occur before the transfer cask shield neutron exposure would reach the level of the laboratory tests. Similarly, over 50 years of continuous design basis gamma exposure would be required before the laboratory test exposure levels were reached. In actuality, the exposures would need to be considerably longer with spent fuel due to the continually declining source term.

The NS-4-FR neutron shield material is used as a neutron shield in the transfer cask and the Vertical Concrete Cask (VCC) shield plug. It is not used in the storage cask. In the transfer cask, the amount of time this material will experience significant neutron fluxes is minuscule compared to the amount of time to cause radiation embrittlement of the material. In the VCC shield plug, the NS-4-FR material is placed above the canister lid and is exposed to significantly lower neutron fluxes than seen by the transfer cask.

Further, for both the transfer cask and the VCC shield plug, the NS-4-FR neutron shield is completely enclosed within welded steel components. In the transfer cask, the top and bottom plates are seam welded to the shell with full penetration or fillet welds to enclose the NS-4-FR material. Similarly, the NS-4-FR in the VCC shield plug, is enclosed between the shield plug, a retaining ring and a cover plate using fillet welds. Since the NS-4-FR is sandwiched between these various steel shells for the transfer cask and VCC shield plug, the NRC has reasonable assurance that the NS-4-FR material will maintain its form over the expected lifetime of the transfer cask's or shield plugs radiation exposures. Even if the material were to become embrittled, its placement within the VCC shield plug and transfer cask components would not allow the material to redistribute.

Comment C–8: One commenter stated that eight supply and two discharge lines in the transfer cask wall adds to confusion and mistakes, and that introducing forced air to cool the contents and allow the canister to remain longer in the transfer cask is asking for trouble because workers bank on the time being available.

Response: The NRC disagrees with the comment. The number of supply and discharge lines is a specific design

objective to ensure uniform cooling so the spent fuel contents in the canister remain within the design envelope during loading and unloading operations. Activities associated with the safe and proper use of the transfer cask design are to be conducted in accordance with site-specific operating procedures generated by the user. Appropriate identification and controls for the operation of the air supply and discharge lines, sufficient to minimize confusion and mistakes, are a responsibility of the general licensee. The objective of the option to provide forced air cooling to the transfer cask, although not intended to be routine, is to maintain the spent fuel contents within the design envelope at all times. If an operational situation results in the use of the forced air option, the spent fuel contents will remain under analyzed conditions, and thus the availability of this option is considered beneficial.

Comment C–9: One commenter opposed the idea of using the transfer cask if a canister must be removed from a concrete cask. The commenter asked if the intent is to use the transfer cask for storage if there are problems and why.

Response: The NRC evaluated and accepted the use of the transfer cask if a canister must be removed from a concrete cask, including unloading operations. The transfer cask is not an authorized configuration for long-term storage. The use of the transfer cask for loading and unloading operations is controlled by the TSs.

Comment C–10: One commenter asked that preferential loading and administrative control of fuel assemblies not be allowed to leave a wide safety margin to protect the public.

Response: The NRC disagrees with the comment. The NRC's safety evaluation determines with reasonable assurance that an adequate (rather than "wide") safety margin is ensured with respect to all cask activities. The proper selection and loading of candidate spent fuel assemblies necessarily relies on appropriate administrative controls. All 10 CFR Part 50 licensees that will use this cask design under the general license have extensive experience in selecting uniquely identified fuel assemblies for placement in uniquely identified locations, such as the reactor core or the spent fuel pool. Preferential loading specifications, in conjunction with the appropriate administrative loading controls, have been accepted by the NRC because they maintain an adequate safety margin and rely on similar existing administrative controls for safe fuel handling.

Comment C–11: Three commenters requested the removal of the inference in Chapter 10 of the SAR that a daily inspection of the VCC vents is an expected or routine activity. The commenters stated that identification of blocked VCC vents is accomplished by use of the temperature monitoring systems, and that physical inspection of the VCC vents, especially daily, results in unnecessary exposure and is not in keeping with preferred As Low As Reasonably Achievable (ALARA) practices.

Response: NRC disagrees with this comment. The cask user is required to verify the operability of the heat removal system by monitoring temperature instrumentation daily, as specified in TS A.3.1.6. As stated in SAR section 1.2.1.5.9, the temperature monitoring system can be read at a display device located on the outside surface of the cask or at a remote readout location. A daily inspection of the VCC vents is included in Chapter 10 of the SAR as an expected routine operation in determining a conservative, estimated annual dose due to routine operations as per ALARA practices. Whether to use a temperature monitoring system with a display on the outside of the casks or to use remote readout instrumentation is left to the cask user's discretion.

Comment C–12: Two commenters stated that the operator testing and training exercises described in CoC Section A5.0 do not require training in the importance of sequence, and commented that the CoC implies that training will be conducted solely on the activity basis, and thus, the planned training loses the importance of the various interface requirements between activities that follow each other. This omission permits operator mistakes at activity intersections and may contribute to missing parameter values or conditions that must be met for safe loading and transfer of the assembly canister from the spent fuel pool to the storage cask. The commenters stated that individual procedures should include stated preconditions that must be satisfied by the previous sequential procedure and are necessary for safely performing the subsequent activity, and that without these procedures, the application does not satisfy the requirements of 10 CFR 72.236(l).

Response: The NRC disagrees with the comment. The Administrative Controls and Programs section of the TS stipulates that the training program for the NAC–UMS system must be developed under the general licensee's systematic approach to training (SAT). The training modules must include comprehensive instructions for the operation and maintenance of the NAC–UMS System. The TS provides a detailed listing of the preoperational tests and training exercises that must be performed prior to the first use of the system to load spent fuel assemblies. Although the TS specifically recognizes that dry runs may be performed in an alternate step sequence from the actual procedures, it is the general licensee's responsibility under the SAT to establish and execute an effective preoperational testing and training program. With respect to the contents of individual procedures, Condition No. 2 of the CoC specifies that the user's written site-specific operating procedures must be consistent with the technical basis described in Chapter 8 of the SAR. The preparation of written site-specific operating procedures that contain adequate and appropriate initial conditions, prerequisites, and verifications, is not necessary prior to this rulemaking to add the NAC–UMS cask design to the list of approved storage cask designs of 10 CFR 72.214.

Comment C–13: One commenter asked why the speed of a vertical tornado-driven missile is assumed to be only 70 percent of the speed of a horizontal missile.

Response: The primary wind velocities associated with tornadoes are in the horizontal direction, and thus wind velocities in the vertical direction are considered to be less as stated in NRC review guidance. Specifically, the NUREG–0800, Section 3.5.1.4, review guidance describes the basis for the assumption that the maximum speed of a vertical tornado-driven missile, at 88.2 mph, is specified as 70 percent of a horizontal missile, at 126 mph. This vertical speed is enveloped by the horizontal missile speed of 126 mph considered conservatively in the SAR evaluation of the 1½ inch-thick VCC closure plate, that can only be hit by a vertical missile. The SAR has satisfactorily demonstrated that the VCC closure plate is adequate to withstand local impingement of a tornado missile traveling at the higher horizontal speed, *e.g.*, 126 mph.

Comment C–14: One commenter remarked that the transfer cask gets highly irradiated and exposed to high temperatures and contamination through repeated use and asked what happens to the transfer cask over time, especially the welds. The commenter stated that the trunnion area welds need inspection over time for possible leakage of pool water inside the transfer cask walls. The commenter stated that transfer casks for all cask designs need specific criteria for examination

periodically and that maybe the transfer casks are too neglected in NRC thinking. The commenter also asked what happens if water gets inside the walls starting chemical reactions and adding unaccounted for weight in lifts, and what are the requirements for transfer cask testing or checking over time.

Response: The NRC agrees that the transfer cask will be subject to hostile environmental conditions such as high radiation, temperature, and contamination through repeated use. In SAR Section 9, NAC has committed to a transfer cask maintenance program to inspect the transfer cask trunnions and shield door assemblies for gross damage and proper function for each use. Annually, the lifting trunnions, shield doors, and shield door rails must be either dye penetrant or magnetic particle examined. The SAR states that the examination method must be in accordance with Section V of the ASME Code and the acceptance criteria Section III, Section NF, NF–5350, or NF5340, as required by ANSI N14.6. Therefore, the transfer cask, including trunnion welds, is examined periodically to ensure that it will function as designed over its entire service life. This provides reasonable assurance, supplemented by inspections prior to use that water will not get inside the wall to result in potential chemical reactions or unaccounted weight in lifts.

Comment C–15: One commenter stated that if berms or shield walls are to be used for radiological protection, an evaluation of tornado missiles that could be generated as a result of their constituent materials should be performed.

Response: The NRC agrees with the comment. Use of berms or shield walls for radiological protection is a site-specific consideration that is to be evaluated by the general licensee under 10 CFR 72.212 to ensure that the reactor sites parameters, including analyses of tornado missiles that could be generated due to the material constituency of any berms or shield walls, are enveloped by the cask design bases.

Comment C–16: One commenter stated that explosion needs more evaluation, noting that where there is hydrogen, there can be an explosion.

Response: The NRC disagrees with the comment. The NRC staff has found reasonable assurance that the possible generation of hydrogen due to cask loading and unloading operations has been evaluated, and that adequate controls are in place to detect and take corrective actions if significant quantities of combustible gases are generated. SAR Subsection 11.2.5 (explosion accident analysis under storage conditions) evaluates the NAC–UMS system subject to an external pressure up to 22 psig, has been accepted by the NRC staff, and provides part of the technical basis for site parameters evaluations performed in accordance with 10 CFR 72.212(b)(3). Further evaluation of the possible effects of an explosion involving hydrogen or other combustible materials under storage conditions is site-specific and beyond the scope of this rulemaking.

Comment C–17: Three commenters stated that the parameters provided in B 3.4(6) of the Approved Contents and Design Features in Appendix B of CoC 1015 are not relevant to the drop accident condition and are not relevant to the tip-over provided that the allowable seismic accelerations are not exceeded (*i.e.*, the cask does not tip over). As a result, the commenters request that Item 6 be revised to read: "In addition to the requirements of 10 CFR 72.212(b)(2)(ii), the seismic acceleration at the top surface of the ISFSI pad cannot exceed the value provided in B 3.4 (3)."

Response: The NRC agrees in part with the comment in that the parameters are not relevant to the SAR Subsection 11.2.4.3 VCC 24-inch vertical drop accident. These parameters have been removed from the TS as suggested. However, the same set of site concrete pad and soil parameters relevant to the tip-over analysis is being summarized in SAR Subsection 11.2.12 to ensure that the bounding side drop decelerations determined for the NAC-UMS system are available for site specific application without the need for going through additional cask tip-over analysis.

Comment C–18: Two commenters stated the heavy load lifting ability of the transfer and storage systems (described in PSER Section 3.2.3) appears to be inadequately supported and that the systems are not redundant for either attachment or lift capability, and therefore, do not satisfy the requirements for single failure of the lifting equipment. The commenters also stated that the transfer cask trunnions and storage cask lifting lugs are not redundant and do not satisfy the requirements for single failure or the requirements of 10 CFR 72.236(h).

Response: The NRC disagrees with the comment on the adequacy of SAR evaluation for heavy load lifting abilities of the VCC lifting lugs and transfer cask trunnions.

As noted in SER Subsection 3.2.3.4, the SAR demonstrates structural acceptance of the VCC components for the top lift operation in accordance with ANSI N14.6. The basic design stress factors of 3 and 5 against materials yield (S_y) and ultimate (S_u) strengths, respectively, are met with the allowable stress the lesser of $S_y/3$ or $S_u/5$. The commenters were correct that the VCC lifting lugs do not meet the single-failure-proof lifting provision because the lifting lugs provide a single-load path. However, the SAR Subsection 11.2.4 VCC drop analysis is consistent with the assumption of non-single failure proof lifting lugs. Also, the VCC lift lugs do not need to be single failure proof because of accident analysis and administrative controls. The applicant's evaluation of a possible 24-inch vertical drop (limited by controls to a lift height of 24 inches or less) of the VCC was shown to have no significant radiological consequences, and has been accepted by the NRC staff.

On transfer cask trunnions, SER Subsection 3.2.3.1 recognizes that, for a two-trunnion lifting configuration, the maximum trunnion bending stress corresponds to the stress design factors of 9.4 and 20.7 that are larger than the required factors of 6 and 10 against the material yield and ultimate strengths, respectively. Therefore, the structural capability of the trunnions satisfies the ANSI N14.6, Section 7.1, requirements for lifting critical loads with either a dual-load path handling system (with the basic design stress factors of 3 and 5 against materials yield and ultimate strengths, respectively), or a single-load path system with increased design stress factors that double the basic design stress factors.

Comment C–19: Two commenters stated that the criticality analysis as discussed in the PSER Section 6.4 does not provide a listing of the fissile material in the spent fuel assemblies, without which the analysis is questionable and does not satisfy the requirements of 10 CFR 72.236(c). Of particular concern is the concentration of Pu-239 which continues to undergo spontaneous fission and therefore, increased neutron flux.

Response: The NRC disagrees with the comment. The criticality analysis uses the conservative assumption of fresh fuel without burnable poisons. The analyzed fresh-fuel composition is always more reactive than the actual composition of irradiated fuel. Consistent with the fresh-fuel assumption, the criticality analysis lists only the fissile materials present in fresh fuel. Results of the analysis clearly demonstrate compliance with 10 CFR 72.236(c), the requirement that the spent fuel be maintained in a subcritical condition. The NRC notes that the neutron flux arising from spontaneous

fission or other fixed neutron sources in the cask has no bearing on the neutron multiplication factor, k_{eff}. Furthermore, as shown in the shielding analysis, the neutron flux in stored spent fuel arises mainly from the spontaneous fission of Cm-242 and Cm-244. Spontaneous fission of Pu-239 contributes very little to the neutron flux in spent fuel.

D. Design

Comment D–1: One commenter expressed concern about icicles forming and covering the cask vent holes. The commenter stated that more study is needed for full cask array monitoring and cleaning in an ice storm, and that plans should be made for this situation.

Response: TS A.3.1.6, "Concrete Cask Heat Removal System" requires that the cask user perform daily surveillance to verify the cask outlet temperature. The method of performing the daily check is a site-specific consideration of the cask user. If the daily temperature surveillance indicates a temperature outside of the acceptable range, then an inspection must be performed within 4 hours to verify that the inlets and outlets are not blocked or obstructed.

Comment D–2: One commenter did not share the NRC's reasonable assurance that cladding will be protected in unloading because it has never really been tried and tested. The commenter stated that this testing needs to be performed on cladding material and that the commenter has been requesting the NRC to prove the cladding integrity for years.

Response: The NRC disagrees with the comment. The NAC–UMS storage cask system design has been reviewed by the NRC. The basis of the safety review and findings are identified in the SER and CoC. Testing is normally required when the analytic methods have not been validated or assured to be appropriate and/or conservative. In place of testing, the NRC finds acceptable analytic conclusions that are based on sound engineering methods and practices. The NRC has reviewed the analyses performed by NAC and found them acceptable. However, as part of an ongoing cooperative research effort (NRC, DOE, and EPRI) regarding long-term performance of spent fuel storage, one spent fuel storage cask has been unloaded and inspected at INEEL in Idaho. Results to date are quite reassuring that the behavior of the casks and fuel assemblies is as expected.

Comment D–3: One commenter asked what is the purpose of adding solar heat to the outer cask surface and averaging over a 12-hour period for the air flow and concrete cask model. The commenter also stated that reducing the view factor when analyzing thermal interaction among casks in an array, as was done for this design, should be done for all cask designs.

Response: The purpose of adding insolation to the air flow and concrete cask model is to include the effect of solar heat on the cask that would heat the outer surface of the concrete cask and reduce heat removal from the canister through the concrete. The amount of solar heat is determined from 10 CFR Part 71 and may be averaged over a 24-hour period per the guidance provided in NUREG–1536, the Standard Review Plan for Dry Cask Storage Systems. The comment that other cask designs should similarly reduce the view factor to compensate for an array arrangement is outside the scope of this NAC–UMS rule.

Comment D–4: Three commenters requested that the language in B 2.1.2 of the "Approved Contents and Design Features" addressing preferential loading and center position loading of shortest cooled fuel be revised as follows:

- The last two sentences of the first paragraph of this section should be deleted.
- The second paragraph should be revised to delete reference to the "basket interior," which is described as the "basket center positions" in the previous paragraph.
- The third paragraph should be moved prior to the current first paragraph.
- The first sentence of the current second paragraph should be made a separate paragraph, as it is not related to the text that follows.

Response: The NRC has no objection to editing Section B2.1.2 as suggested, because it does not change the loading configuration or the means of accomplishing preferential loading. The specification has been revised consistent with the comment.

Comment D–5: One commenter noted that SER Section 1.1.1 does not specify the material of the tie rods of the BWR basket. The commenter asked why the change in materials to carbon steel for the BWR basket disks were made, necessitating the electroless nickel coating to protect from corrosion. The commenter also asked several other questions about the nickel coating including the criteria for applying the coating; how the coating is checked to ensure it is properly applied; how the coating is checked for long term storage and unloading pressures, stresses, and temperatures; if the NRC has checked the manufacturer's sheets for the coating; and if the BWR support disk coating has been evaluated for material reactions.

Response: The tie rods of the PWR and BWR baskets are fabricated with ASME SA–479 Type 304 stainless steel. The applicant chose carbon steel as the BWR support disk material because it has higher allowable stresses and load carrying capability.

The BWR support disks are coated with electroless nickel in accordance with American Society for Testing and Materials (ASTM) Specification B733–1997 (SC3, Type V, Class 1). The drawings specify the application in accordance with the ASTM specification, and the ASTM specification includes criteria to ensure proper application. All fabrication activities are to be carried out under a quality assurance program that meets the requirements of 10 CFR Part 72. As noted in SAR Section 3.4.1.2.4, the applicant demonstrated that the nickel coating is not expected to react with the spent fuel pool water during loading or unloading operations such that unsafe levels of flammable gas are produced. In the event flammable gases are produced from chemical or galvanic reactions, the procedures of SAR Sections 8.1 and 8.3, which specify that the cask user monitor the concentration of hydrogen gas during welding or cutting operations on the shield lid welds, ensure that accumulation of flammable gases is negligible and that workers are protected. Therefore, the NRC has reasonable assurance that the BWR support disk coating will not react with the spent fuel pool water during loading and unloading to produce unsafe levels of flammable gases.

Comment D–6: Two commenters stated that neither the PSER nor the PSAR explain how consolidated fuel assemblies that have been canned will maintain confinement in the NAC–UMS system. They also note that the process of conselidation is expected to produce broken/damaged rods and that the screens will not confine the powder form (U_3O_8) of the fuel.

Response: This comment is beyond the scope of this rule. For this rulemaking, the NAC–UMS storage system SAR only considers the storage of intact spent fuel that meets the limits as specified in the TS.

Comment D–7: One commenter questioned the design and performance of the transfer cask extension and asked if it had been evaluated in relation to all evaluations for the TSC itself. The commenter asked if there is any possibility that the active fuel region could be pulled up into the extension area of the transfer cask and if all risks

associated with use of the extension have been evaluated.

Response: The extension for the transfer cask is needed to provide gamma shielding to the workers while the transfer cask is being moved from the spent fuel pool to the VCC. The extension provides gamma shielding when the overall height of a standard fuel assembly has been increased due to the insertion of a control assembly. Because there is no neutron source associated with the control assembly, the NS-4-FR neutron shield is not needed. Because of the distribution of the active fuel region of a fuel assembly and the configuration of the transfer cask, the possibility of the active fuel region being pulled up into the extension is improbable.

The structural performance of the bolts that attach the transfer cask extension to the PWR Class 2 transfer cask has been evaluated in SAR Subsection 3.4.3.3.4 for inadvertent TSC lifting against the retaining ring. Subsection 3.2.3.1 of the SER evaluates transfer cask load bearing components, including the transfer cask extension, and concludes that they are structurally acceptable.

Comment D–8: Three commenters stated that a number of the NAC–UMS license drawings require some minor revisions, citing that the initial fabrication processes for the NAC–UMS have identified the need for additional clarifications and corrections to address editorial omissions for some of the current license drawings. The commenters noted that the requested revisions do not constitute design changes to the components or require revision of the existing SAR text or supporting evaluations. The commenters also stated that the incorporation of the requested revisions will significantly enhance the fabrication inspection process and allow authorized users of the NAC–UMS System to fabricate the components without processing 10 CFR 72.48 evaluations for minor variations with the current license drawings. The commenters' comments relate specifically to the following drawings: 790–559, 790–560, 790–561, 790–562, 790–563, 790–564, 790–570, 790–575, 790–581, 790–582, 790–583, 790–584, 790–585, 790–595, and 790–605.

Response: The NRC agrees, with the exception of the addition of NS–3 as a neutron shield material in the VCC shield plug, that the additional clarifications and corrections to address editorial omissions on the drawings do not constitute design changes to the components or require revisions to SAR text or the NRC's CoC, TS, or SER. The characteristics and evaluation of the use of NS–3 neutron shielding material have not been provided in the SAR; thus the NRC considers this aspect to be a design change. The NRC considers enhancements to the fabrication inspection process as a result of the drawing changes beneficial to all stakeholders.

Comment D–9: Three commenters requested that B.2.2.3 of the Approved Contents and Design Features be revised to indicate the phrase "or demonstrate" between the (existing) words "restore" and "compliance."

Response: The NRC agrees with the proposed clarification of the TS, and it has been revised accordingly.

Comment D–10: Three commenters requested that the following additional note be added to both Tables B2–2 and B2–4 of the Approved Contents and Design Features: "Parameters shown are nominal pre-irradiation values."

Response: The NRC agrees with the proposed clarification of the TS, and it has been revised accordingly.

Comment D–11: One commenter noted that a 24-inch drop would result in permanent deformation of the air inlets of the TSC pedestal and loss of part of the inlets. The commenter did not believe that the pedestal should be part of the inlets.

Response: The NRC disagrees with the comment. The air inlets are an integral part of the pedestal or base weldment. The base weldment, that supports the TSC is expected to undergo yielding and partial collapse in a 24-inch drop of the VCC. SAR Subsection 11.2.4 presents the finite element analysis for calculating a bounding TSC deceleration and corresponding VCC base weldment deformation, that have been evaluated in SER Subsection 3.3.5.2. The NRC agrees with the SAR assessment that the 1-inch deformation of the air inlets is small compared to the 12-inch height of the air inlet because the effect of this deformation is bounded by the blockage of half of the air inlets evaluated in SAR Subsection 11.1.2 for satisfying the radiological dose limits of 10 CFR 72.102(a). It is important to note that although the accident evaluation for the concrete cask 24-inch drop has determined that the cask will remain functional and that there would be no radiological impact from the event, a full evaluation and corrective action of such an event's effects on cask performance, such as replacing the damaged VCC, would be performed according to the cask users corrective action and quality assurance processes.

Comment D–12: Three commenters requested that B 3.5.2.1 (4) of the Approved Contents and Design Features be revised to read: "The CHF design shall incorporate an impact limiter for CANISTER lifting and movement if a qualified single failure proof crane is not used."

Response: The NRC agrees with the comment. B 3.5.2.1 (4) has been revised as suggested.

Comment D–13: Three commenters agreed that the following parameter definition clarifications are needed to Table B3–2 of the Approved Contents and Design Features: "D" should be revised to read "Crane hook dead load" and "D*" should be revised to read "Apparent crane hook dead load".

Response: The NRC agrees with the comment. Table B3–2 has been revised as suggested.

Comment D–14: Two commenters stated that the process of placing the spent fuel in the canister is not adequately justified as required by 10 CFR 72.236(l). The industry consensus standard, ANSI/ANS–57.1, "Design Requirements for Light Water Reactor Fuel Handling Systems" requires a translation inhibit for the spent fuel handling equipment. The commenters commented that although the standard permits an allowed bypass for this interlock, the bypass is limited to a jogging function. The NAC–UMS procedures do not make it clear that installed bypasses must be performed step-by-step as required by the standard, not in a continuous motion. The commenters stated that the handling equipment of a plant applying for approval to load dry storage canisters should be checked for continuous translation bypass in sensitive areas to eliminate the potential for a major radioactive dispersal accident.

Response: This comment is beyond the scope of this rule. Safe fuel handling practices at reactor sites, including cask loading and unloading operations, are the responsibility of the 10 CFR Part 50 licensee. Section 72.212 requires general licensees to determine if activities related to the storage of spent fuel involve any unreviewed safety question or change in the facility TS. The general licensee's evaluations and spent fuel handling practices are subject to regulatory oversight by the NRC's inspection process.

Comment D–15: One commenter was concerned that a fuel assembly with too short bottom hardware can extend below the bottom of the poison panels, and asked if requiring a minimum length of bottom hardware will prevent this extension and if workers will measure it correctly. The commenter thought it would be safer to have longer poison panels and asked if cost-cutting is a factor.

Response: Requiring a minimum length of bottom fuel hardware will indeed prevent the bottom of the active fuel from extending below the bottom of the poison panels under normal and accident conditions. The length of a fuel assembly's bottom hardware is usually known from the fuel design drawings or other fuel records. When this is not the case, the NRC sees no significant difficulties in the use of simple in-pool measurements (e.g., with a video camera and ruler) to adequately determine the bottom hardware dimensions. Because the required minimum length of fuel bottom hardware and spacer effectively precludes unanalyzed configurations of the fuel and poison, the NRC finds no basis for requiring NAC to use longer poison panels. The NRC has not considered cost factors in concluding that the cask design complies with the applicable safety regulations.

E. Welds

Comment E–1. One commenter asked why partial penetration welds should be acceptable for the shield and structural lids. The commenter does not consider the closure redundant if the shield lid cannot be ultrasonically tested and stated that the structural lid needs a full penetration weld with ultrasonic testing because this area is crucial.

Response: The NRC accepts the closure weld's configuration and examination in accordance with Interim Staff Guidance-4, Revision 1 that allows the use of a partial penetration closure weld and a multi-layer (i.e. progressive) liquid penetrant (PT) surface examination in lieu of a volumetric examination. Furthermore, ASME Code Case N–595–2, "Requirements for Spent Fuel Storage Canisters" permits partial penetration welds for end closures using two cover plates and liquid penetrant examination of the weld.

Comment E–2: One commenter was concerned about the pedestal weldment, stated that one inch may make a big difference in deformation, and asked if all possible problems have been examined.

Response: The pedestal weldment that supports the TSC, is expected to undergo yielding and partial collapse in a 24-inch drop of the VCC. SAR Subsection 11.2.4 presents a finite element analysis for calculating a bounding TSC deceleration and corresponding pedestal air inlets deformation that has been evaluated in SER Subsection 3.3.5.2. The NRC agrees with the SAR assessment that the 1-inch deformation is small compared to the 12-inch height of the air inlet. Also, the effect of this deformation is bounded by that of the blockage of half of the air inlets that has been evaluated in SER Subsection 11.1.2 for satisfying the radiological dose limits of 10 CFR 72.102(a). See also related response D–11.

F. Structural Evaluation

Comment F–1: One commenter asked why the pedestal plate and cask base plate are carbon steel and not stainless steel. The commenter asked for an explanation of the pedestal plate: how it is used, for what purpose, what shape it is, can it rust to the cask bottom plate and the canister bottom plate creating a problem in pulling out the canister, why is it not ceramic, why the VSC–24 necessitated ceramic tiles, and what it does long term in storage.

Response: As depicted in SAR Figure 11.2.4–1 and Drawing 790–561, the pedestal or weldment plate is a 2-inch thick, 67.5-inch diameter, horizontal circular carbon steel plate. It provides a direct bearing surface to the TSC for transmitting gravity and impact vertical loads, through the vertical ring and inner cone baffle weldments, to the VCC support pad. Detail B-B of SAR Drawing 790–560 shows that a ¼-inch thick stainless steel plate is installed between the TSC bottom and the pedestal plate. The stainless steel plate isolates the TSC from the VCC carbon steel base plate. This configuration will prevent the carbon steel pedestal plate from rusting to the stainless steel TSC canister bottom. Therefore, no adherence force will develop to cause any shifting, deforming, or cracking of the pedestal plate in handling, as suggested.

Analysis of the VSC–24 cask design is beyond the scope of this rule.

Comment F–2: Two commenters noted that although the PSER structural analysis (Sections 3.1 and 3.4) discusses three types of tornado-generated missiles, there is no analysis of a terrorist attack in the form of a fired missile. Foreign regulatory agencies are now requiring such an analysis. The commenters commented that the need for the analysis is driven further by a common location of the ISFSIs near international waters and that the recent introduction of high penetrating depleted uranium missile shells adds to the concern of a terrorist event. The commenters stated that an analysis of the vulnerability of an ISFSI to such an attack may identify the need for sturdier storage module surfaces, an expanded site security area, or a storage enclosure, and that without such an analysis, the application does not satisfy the requirements of 10 CFR 72.236(l).

Response: The NRC disagrees with the comment. The NRC reviewed potential issues related to possible radiological sabotage of storage casks at reactor site ISFSIs in the 1990 rulemaking that added Subparts K and L to 10 CFR Part 72 (55 FR 29181; July 18,1990). The NRC regulations in 10 CFR Part 72 establish physical protection requirements for an ISFSI located within the owner-controlled area of a licensed power reactor site. Spent fuel in the ISFSI is required to be protected against radiological sabotage using provisions and requirements as specified in 10 CFR 72.212(b)(5). Further, specific performance criteria are specified in 10 CFR Part 73. Each utility licensed to have an ISFSI at its reactor site is required to develop physical protection plans and install systems that provide high assurance against unauthorized activities that could constitute an unreasonable risk to the public health and safety.

The physical protection systems at an ISFSI and its associated reactor are similar in design features to ensure the detection and assessment of unauthorized activities. Alarm annunciations at the general license ISFSI are monitored by the alarm stations at the reactor site. Response to intrusion alarms is required. Each ISFSI is periodically inspected by the NRC. The licensee conducts periodic patrols and surveillances to ensure that the physical protection systems are operating within their design limits. It is the ISFSI licensee who is responsible for protecting spent fuel in the casks from sabotage rather than the certificate holder. Therefore, the commenter's interpretation of 10 CFR 72.236(l) as requiring the cask design to be analyzed for specific forms of terrorist attacks is beyond the scope of this rule.

Comment F–3: One commenter noted that the NAC–MPC VCC weighs 155,000 pounds and that the NAC–UMS VCC weighs between 221,000 and 238,000 pounds empty, and asked if this weight has been evaluated for all systems. The commenter also asked why the UMS wall is 7 inches thicker than the MPC and the carbon steel liner thickness is 1 inch less in the UMS than in the MPC, suggesting that more concrete and less steel was used to cut costs.

Response: The weights for five classes of VCC listed in SAR Table 1.2–5 have been considered to establish bounding values for evaluating structural performance of the NAC–UMS system. The design for the thickness of the concrete wall and its liner plate for different storage cask systems is NAC's choice to meet various cask performance objectives such as protection from tornado missiles and radiation shielding and heat rejection. The design has been

evaluated in the SAR and found acceptable by the NRC.

Comment F–4: One commenter asked why in Section 3.1.1.3 of the SER the transfer cask extension is identified as "low alloy steel" instead of "carbon steel."

Response: The NRC recognizes that the transfer cask extension is fabricated with the ASTM A516, Grade 70, carbon steel, per SAR Drawing 790–560. Accordingly, SER Subsection 3.1.1.3 is revised to read: "The transfer cask extension is a carbon steel ring designed to be bolted to the transfer cask."

Comment F–5: Three commenters noted that either plate or forging material specified in ASME SA240 or ASME SA 182 should be permitted for both the shield lid and structural lid of the TSC. The commenters stated that only minor differences exist between the properties of each material and that these differences do not affect the performance of the components in the NAC–UMS System.

Response: The NRC agrees with the comment. NAC has noted in SAR Section 3.4.4.1.11 that the forged material is required to have ultimate and yield strengths that are equal to or greater than the plate material. This ensures that the critical flaw size determination is applicable to both the SA–240 and SA–182 materials. SAR Drawing 790–584 has been revised to permit the use of ASME SA182 as an alternate to SA240 for both the shield and structural lids of the TSC.

G. Thermal Evaluation

Comment G–1: One commenter asked how the NRC can assure the public that determination of the design basis decay heat load was done properly and who checks this determination.

Response: The design basis heat load is determined by the applicant, supported by their calculations, loaded in accordance with their procedures, and demonstrated to be in compliance with the design by TS surveillance measurements of the cask air inlet and air outlet temperatures. The NRC reviewed the SAR to provide assurance that the thermal design meets the regulations and performs as intended. The NRC, as stated in Section 4.3 of the SER, confirmed through analysis a sample of the decay heat loads identified in the SAR and verified through independent analysis that the design bases heat load is bounding. The NRC has concluded that the design bases heat load was determined properly. The user has the responsibility to load the canister in accordance with site-specific operating procedures that reflect the TS limits, including those limits imposed on heat load.

Comment G–2: One commenter considered the fuel cladding temperature increase and reduction in normal temperature margin to be quite large when a sensitivity analysis was performed on fabrication tolerances on gap size between the support/heat transfer disks and the canister shell. The commenter asked if the fabrication tolerances can be tightened.

Response: The NRC evaluated the effect of fabrication tolerances and has determined that the consequences are acceptable. Further "tightening" of tolerances may hinder fabrication of the canister/basket assembly and possibly adversely effect spent fuel loading and unloading operations.

Comment G–3: Three commenters requested that the language of LCO 3.1.1 (Canister Maximum Time in Vacuum Drying) with respect to "in-pool cooling" be clarified to not restrict this cooling to only the spent fuel pool. The commenters noted that in some plant configurations, the use of the cask loading area or area other than the fuel pool may be desirable for providing cooling. The commenters also request that the second frequency for both surveillance requirement 3.1.1.1 and surveillance requirement 3.1.1.2 be revised to read: "as required to meet the Limiting Condition for Operation (LCO) time limits."

Response: The NRC disagrees with the comment. Insufficient information has been provided to describe the alternative to in-pool cooling. Spent fuel pools are maintained in a specific temperature range whereas the proposed alternative appears not to be limited in either temperature or configuration. Currently, more than one cooling method is provided because the referenced LCO 3.1.1 does allow forced air cooling as an alternative to in-pool cooling. Adding "as required to meet Limiting Condition for Operation (LCO) time limits" to the second frequency of surveillance requirement (SR) 3.1.1.1 and SR 3.1.1.2 more clearly identifies the required time intervals, is acceptable to the NRC staff, and has been revised accordingly.

Comment G–4: Three commenters stated that under LCO 3.1.6 (Concrete Cask Heat Removal System), SR 3.1.6.2 should be deleted. The commenters noted that this surveillance is already required under A 5.4, "Administrative Controls and Programs" and that A 5.4 should be revised to clearly state for which off-normal, accident, or natural phenomena events the surveillance should be performed. The commenters stated that reference to Chapter 11 of the SAR, NUREG–1536, or 10 CFR 72.24 and 72.122 would identify events that would require surveillance.

Response: The NRC agrees with the comment to delete SR 3.1.6.2 because Administrative Control A 5.4 ensures that the ISFSI will be inspected within 4 hours of an off-normal, accident, or natural phenomena event to ensure that at least half of the air inlets and outlets on each concrete cask are free of blockage within 24 hours. Also, SR 3.1.6.1 requires a comparison of the cask outlet temperature to the ambient temperature every 24 hours. However, the NRC does not agree to list the specific events in A 5.4 that could cause blockage because SAR Chapter 11 does not provide a comprehensive listing, but instead gives examples of possible events.

Comment G–5: Two commenters noted the NAC–UMS system dissipates heat through conduction from the center of the fuel assembly-filled canister to the canister walls and away from the canister through natural convection by air circulation over the canister's outer surface. The commenters stated that the analysis of the expected configuration described in the PSER Section 4.4.1.2 is based on an unrealistic physical model that assumes concentrically centered fuel assemblies. In fact, conduction is radial (not axial) and is based solely on the physical contact of the fuel assembly with the basket holding the assemblies. The commenters stated that because the NAC–UMS system is a vertical storage system, there is a potential for nonuniform physical contact between the basket and the fuel assembly and that for this reason, hot spots may develop along the axial direction of the fuel rod. The commenters stated that the PSER does not analyze the degradation effects of these hot spots to assure cladding integrity throughout the license storage period and thus, the application does not satisfy the requirements of 10 CFR 72.236(b), (e), (f), and (l).

Response: The NRC disagrees with the comment. The SAR clearly states that conduction and radiation are modeled in the axial and radial directions. Certain aspects of heat transfer are conservatively ignored (e.g. radiation heat transfer from the fuel tubes, and contact between fuel assemblies and fuel tubes, fuel tubes and support/heat transfer disks, and support/heat transfer disks and the canister wall). Consideration of these omissions would only increase the heat transfer from the basket assembly and result in a lowering of the calculated fuel cladding temperature.

Comment G–6: Three commenters stated that to provide for a safer approach and greater flexibility in the loading and use of the NAC–UMS System, the TS should be revised to extend the LCO completion time frames based on a variable heat loading, as appropriate. The commenters noted that the design basis heat load time frames do not provide for an optimal approach to the loading and use of the first canister or those canisters that contain fuel with significantly lower heat loads. The commenters indicated that lower thermal loading will provide for extended time frames for many of the current LCO's and enhance operational safety when loading a canister with lower heat loads. The commenters propose that time frames for 20kW, 17kW, 14kW, 11kW, and 8kW be added to the current 23kW design maximum heat load used in developing the current LCO time frame.

Response: The NRC agrees with the comment in principle; however, the NRC considers the certificate amendment process the most appropriate vehicle for implementing such a change at this time. The NRC has already completed its evaluation and solicited public comments by the rulemaking process, based on the request contained in the application. Extensive changes to the TS to include 5 levels of lower cask heat loads, with corresponding changes to the LCO completion time frames, would necessitate additional NRC review and changes to the CoC and SER to an extent that would warrant soliciting additional public comments on the proposed changes. The NRC notes that similar modifications have already been submitted for NRC review in connection with a certificate amendment request to accommodate the contents of the Maine Yankee spent fuel pool.

H. Technical Specifications

Comment H–1: One commenter stated that the evacuated envelope helium leak test sounds inadequate and that the sniffer probe is not the greatest test either. The commenter said that if the shield lid weld cannot be ultrasonically tested, the weld cannot be called a redundant seal. The commenter has concerns for future leakage, especially in shield lid welds, because of the perceived flaws possible in these lid welds.

Response: The NRC disagrees with the comment. For the types of helium leak tests proposed, the NRC found that these tests are capable of detecting leaks to the required sensitivity provided they are performed properly. Furthermore, liquid penetrant examinations are performed on all field welds' root and final surfaces, or progressive liquid penetrant examinations (*i.e.* root, mid-plane, and final surface of the structural closure weld) in accordance with Interim Staff Guidance ISG–4. For the type of welding process, the environmental conditions near the weld, and the austenitic stainless steel weld base material, there are no known delayed cracking mechanisms that could cause the weld to crack after it has been examined. Subsequent to completing the shield lid field weld, a pneumatic pressure test is performed and then a helium leak test is conducted in accordance with the leak-tight criteria of ANSI N14.5. These tests and examinations have been accepted by the NRC as assurance that the requirements of 10 CFR 72.236(e) for redundant sealing of the confinement boundary have been met.

Comment H–2: One commenter objected to the use of progressive liquid penetrant examination (PT) instead of ultrasonic examination (UT) for the structural lid-to-shell weld. The commenter stated the NRC's justification of allowable flaw size is inadequate and needs reevaluation. The commenter commented that the NRC admits progressive PT is not in agreement with ASME code and that making it easier to test welds and accept flaws is in the favor of the utility and vendor, not the safety of the public and workers. The commenter also stated that "sufficient intermediate layers" is an inadequate requirement that should be more specific.

Response: The NRC accepts examination of the cask closure welds in accordance with Interim Staff Guidance-4, Revision 1 that allows the use of a multi-layer (*i.e.* progressive) liquid penetrant (PT) examination in lieu of a volumetric examination. As stated in the ISG, the critical flaw size is determined in accordance with ASME Section XI methodology and is used to determine the spacing between successive PT examination layers. There is enough experience with the progressive PT method to conclude with reasonable assurance that it will detect flaws that are open to the surface and are of a size that would affect the serviceability of the weld. The probability of a failure to detect a flaw of this size because it did not break the surface is low because the liquid penetrant test is undertaken at intermediate weld pass levels (*i.e.* at 3/8 inch for the 7/8-inch thick structural lid closure weld) as well as at the root and final weld passes.

Comment H–3: Three commenters stated that LCO 3.1.6 (Concrete Cask Heat Removal System) should be revised to modify Required Action B.2.2 to allow for the use of supplemental cooling to the concrete cask with a completion time of 12 hours. The commenters also requested a deletion of the reference to transferring the canister to the transfer cask, as use of the transfer cask only is overly restrictive and may not be feasible in some conditions.

Response: The NRC disagrees with the request to change LCO 3.1.6 to provide an alternative to cooling the canister (by presumably providing some form of forced convection) prior to being required to remove it from the concrete cask. No details have been provided that describe how this would be accomplished. Therefore, this request is not acceptable to the NRC. Additionally, in the NRC's judgment, the use of the transfer cask to provide a means of cooling should remain as an option.

Comment H–4: Three commenters stated that the language of LCO 3.1.5 (Canister Helium Leak Rate) should be revised to read "demonstrate a helium leak rate of less than or equal to" rather than "demonstrate a helium leak rate of less than."

Response: The NRC agrees with the comment. The TS has been changed to incorporate the change in wording.

Comment H–5: One commenter noted that ISG No. 3 lets the vendor and utility "off the hook" as to letting the public know an analysis of the dose consequence from a ground level canister breach with 100% fuel rod failure because it is not credible and the analysis is unnecessary. The commenter's view was that vendors and utilities do not want this analysis out to the public to reduce fear of such a failure. The commenter stated that dry cask storage is in its infancy and that such a failure is possible. The commenter said that the public deserves to know dose consequences of all related events, the NRC should be for public and worker safety, and the more information and education the public can get on dry cask storage, the more the public can help solve the problems and ask the right questions.

Response: The NRC disagrees with the implication that ISG–3 was developed to reduce the fear of the public to nonmechanistic accidents such as noncredible failures of the confinement boundary. ISG–3 clarifies the distinction between retrievability and postaccident recovery, and focuses on the identification and evaluation of all credible accident scenarios affecting public health and safety. ISG–3 specifically places emphasis on identifying accidents with potential consequences resulting in the failure of

the confinement boundary and also recommends the modification of emergency plans and event detection capabilities to ensure that licensees have the ability to identify an accident or non-compliance situation. The NRC agrees with the remainder of the comment regarding the rights of the public pertaining to the dose consequences of credible events, concerns regarding public and worker safety, and providing information that enhances the overall understanding of dry cask storage.

Comment H–6: Three commenters requested that Section A5.2 [after A5.2 (n)]of the TS be revised to add the following sentence: "Appropriate mockup fixtures may be used to demonstrate and/or to qualify procedures, processes, or personnel in welding, weld inspection, vacuum drying, helium backfilling, leak testing, and weld removal or cutting."

Response: The NRC agrees with the proposed clarification of the TS and it has been revised accordingly.

Comment H–7: Three commenters requested that Table A5–1 of the TS be revised to indicate a Lifting Height Limit of "<24 inches." The commenters noted that this requested change is consistent with Section 11.2.4.2 of the Preliminary Safety Evaluation Report.

Response: The NRC agrees with the comment. Table A5–1 of the TS has been revised as suggested.

I. Miscellaneous

Comment I–1. One commenter recommended that the SAR title shown in the proposed cask CoC state "as amended" instead of "Revision 2." The commenter commented that identifying a specific SAR revision in the CoC may imply that a CoC amendment requiring prior NRC approval would be required to amend or revise the FSAR. However, the approved changes to 10 CFR 72.48 will allow the cask certificate holder to make changes to the FSAR without prior NRC approval. Also, 10 CFR 72.248 requires the cask certificate holder to periodically update the cask FSAR. Therefore, it would be more accurate and reflect the 10 CFR 72.48 change process and the 10 CFR 72.248 FSAR update requirement if the SAR title shown in the CoC were to state "as amended." This is typically how Part 50 reactor operating licenses refer to the reactor FSAR.

Response: The NRC agrees with the comment. The SAR Title shown on the CoC has been revised to delete a reference to a particular SAR revision number.

Comment I–2: Two commenters stated that neither the applicant nor the NRC has analyzed the impact of pinhole and hairline crack cladding defects over the 20-year license period, much less over the likely storage duration. The commenters stated that extraordinary attention must be given to the removal of water from the loaded canister and that the proposed vacuum drying process will not remove the water completely. They also asserted that available water will react with UO_2 based fuel to form a U_3O_8 phase that could lead to unzipping of the cladding with hairline cracks or pinhole leaks. Therefore, they believe emerging research shows that incomplete drying of the spent fuel before storage combined with demonstrated physical processes can enlarge those defects and "unzip" the cladding, thus breaching a primary containment barrier for the fuel.

Response: The NRC agrees that vacuum drying is an important procedure to prevent the degradation of the spent fuel cladding during storage. However, the NRC disagrees that the impacts of pinhole and hairline crack cladding defects on long term storage have not been evaluated.

All spent fuel storage cask licensees are required to conduct vacuum drying and inert gas backfilling operations to remove oxidizing species from the cask and prevent cladding degradation. As discussed in the report, "Evaluation of Cover Gas Impurities and Their Effects on the Dry Storage of LWR Spent Fuel" (Report Number PNL–6365), and as described in the Standard Review Plan for Dry Cask Storage Systems (NUREG–1536), the combination of the low pressure and elevated temperature of the spent fuel during vacuum drying should remove all of the water from the cask and oxidizing species to an amount less than 1.0 gram-mole. More specifically, after the liquid water has been removed from the storage cask, the air and water vapor are evacuated from the cask until a steady pressure of less than or equal to 3 millimeters of mercury (mm Hg) is achieved and maintained for 30 minutes. Then, the cask is backfilled with helium gas before a second cycle of vacuum drying (*i.e.*, 3 mm Hg for another 30 minutes) is performed. The cask user is required, by the operating procedures in the SAR and in the TS to perform the vacuum drying procedure to ensure there is less than 1.0 gram-mole of oxidizing gases in the cask. These procedures reduce the levels of oxidizing gases to concentrations below those that could cause the fuel to oxidize to the U_3O_8 phase and produce larger gaps in cladding with existing pinhole or hairline crack defects. Therefore, the NRC has reasonable assurance that, if cask licensees conduct the vacuum drying and inert gas backfilling procedures in accordance with the TS of the SAR, the cladding will be protected from gross ruptures (or "unzipping") during storage.

Comment I–3: Two commenters stated that the applicant has not provided reasonable assurance that the NAC–UMS storage system will maintain the required level of confinement integrity in the proposed dry storage installation under the known, normal conditions; has not provided the required assurance that the single failure-proof confinement requirements for cladding and cask integrity will be unimpaired during the expected storage interval; and in particular, has not provided assurance that the integrity of the primary confinement barrier (cladding) will be maintained during the licensed period from cask closure until relicensing or shipment. The commenters also stated that the absence of a primary barrier violates the single failure requirement in 10 CFR 72.236(e) for confinement of the radioactive material.

Response: The NRC disagrees with the comment. In general, the spent fuel cladding is not considered to be the primary confinement boundary of a dry storage cask. Cladding integrity is very important to prevent the fuel from redistributing in the storage cask and to ensure that any release of radioactive material from the cladding has been analyzed in the SAR. For example, one assumption of the confinement analysis is that 1%, 10%, and 100% of the fuel source term are available for release from the cladding under normal, off-normal, and hypothetical accident conditions, respectively. As a conservative approach, the analyses are conducted with those source term release fractions even though there may be no pinholes or hairline cracks in the cladding under normal, off-normal, and hypothetical accident conditions. Further, the NRC has reasonable assurance that existing cladding integrity will be preserved by both maintaining cladding temperatures below the calculated temperature limits and conducting vacuum drying operations in accordance with the TS. (Also, refer to the responses to comments C–6 and I–2.)

As noted in SER Section 7.1, the primary confinement boundary of the NAC–UMS storage system includes the TSC shell, bottom baseplate, shield lid (including the vent and drain port cover plates), and the associated welds. The shield lid (with the vent and drain port cover plates welded to the lid) and the structural lid are independently welded to the upper part of the TSC shell. This

design provides redundant sealing of the confinement boundary and satisfies the requirements of 10 CFR 72.236(e). Therefore, through the analyses presented in SAR Chapter 7, the applicant has demonstrated that the NAC–UMS storage system will maintain the required level of confinement integrity under all conditions of storage. As documented in SER Chapter 7, the NRC concludes that the design of the confinement system of the NAC–UMS storage system is in compliance with 10 CFR Part 72.

Comment I–4: One commenter stated that control components should be low level waste and that only high level waste should be allowed in high level waste containers being sent to a repository. The commenter thinks that failure to separate high and low level waste will result in more handling and confusion in the long run.

Response: The NRC has issued Interim Staff Guidance No. 9, entitled, "Storage of Pressurized Water Reactor (PWR) Fuel Assembly Integral Hardware" to address the authorized storage of control components in spent fuel storage casks. Although control rods are specifically excluded from the NAC–UMS authorized contents, other integral components (*e.g.*, burnable poison inserts and thimble plugs) associated with fuel assemblies have been requested as authorized contents. The NRC's evaluation considered the guidance of ISG–9 in the preliminary SER as it relates to storage under 10 CFR Part 72. The aspects of the comment pertinent to the separation of high and low-level wastes and the future acceptance criteria at a repository are beyond the scope of this rule.

Comment I–5: One commenter noted that two cycles of vacuum drying and helium backfilling are specified for this cask design, and asked if the VSC–24 casks at Palisades and Pt. Beach did not have this done, how safe are those casks and is there any water vapor in the casks.

Response: This rule pertains solely to the evaluation and safe operation of the NAC–UMS storage cask design. Comments pertaining to the VSC–24 or any other cask design were not a subject of the NRC's evaluation of the NAC–UMS design, and are thus beyond the scope of this rule.

Comment I–6: One commenter stated that during cooldown for reflooding, very detailed definite criteria are needed for the steam and water being discharged. The commenter also stated that each cask user should have site-specific procedures in place to add to generic procedures so that all is ready before any cask is loaded, and that the NRC needs to check this activity.

Response: The NRC has reviewed and accepted the generic unloading procedure guidance contained in SAR Chapter 8 that includes detailed criteria to control the evolution. Detailed loading and unloading procedures prepared using the technical basis established in the SAR are a site-specific aspect that is beyond the scope of this rule.

Comment I–7: One commenter stated there should be definite criteria regarding records as to what are permanent and not left up to the licensees to decide, resulting in faded photographs and videos that have disappeared. The commenter suggested checking with experts on permanent recordkeeping.

Response: 10 CFR Part 72, Subpart G, requires that records pertaining to the design, fabrication, erection, testing, maintenance, and use of systems, structures, and components important to safety be maintained until decommissioning of the cask is complete. Criteria for records are specified in Subpart G.

Comment I–8: One commenter remarked that "mobile lifting frame" sounds very vague. The commenter asked if the mobile lifting frame is a transporter, how it works, and if it has been developed.

Response: The TS in the "Design Features" section establishes requirements for the design and operation of a canister handling facility, including any mobile lifting devices. The specific design for a mobile lifting frame was not, and is not required to be, submitted as part of the approval for the NAC–UMS storage cask design. Such a design, if implemented in the future, must be consistent with the cask design basis described in the SAR, the TS, and implemented on a site-specific basis in accordance with existing heavy-loads provisions at a facility licensed under 10 CFR Part 50.

Comment I–9: One commenter stated that the off-normal and accident conditions always assume a cask is fabricated correctly, and asked what problems could occur if there were fabrication problems. The commenter thought fabrication problems and worker mistakes are the leading concerns with dry casks, stated that is why the design has to have the best review possible, and that instructions and criteria have to be simple and clear. The commenter said that the casks will be on the pads forever and the issuance of a CoC should not be rushed.

Response: The NRC agrees that instructions and criteria should be clear and that issuance of a CoC should not be rushed. Part 72 CoCs are issued for 20 years and are then subject to review for renewal, if applicable. The NAC–UMS design has been under NRC review since 1997.

The NRC's approval of cask designs does rely, in part, on the design, fabrication and operation being conducted under an approved quality assurance (QA) program. An approved QA program includes programmatic controls of non conformances, corrective actions, and audits. The NRC has found reasonable assurance that the approved design, manufactured under an approved QA program, will ensure public health and safety under all normal, off-normal, and accident conditions.

Comment I–10: One commenter stated that a quality assurance program is only as good as it is put to use, and that NRC's unannounced visits to contractors and subcontractors are very important. The commenter also stated that licensees need to give full documentation to changes in the design and keep the SAR current.

Response: The NRC agrees with the comments.

Comment I–11: One commenter stated the "main problem" is that nothing in the review considers or involves the review of ultimate disposal of spent nuclear fuel and speculated that Yucca Mountain will never open. The commenter made several general comments about storage and disposal of nuclear waste and alternative forms of energy, and suggested that as more spent nuclear fuel is handled and transported, the probability of more problems will arise.

Response: Comments regarding the future use of a repository, transport and disposal of nuclear waste, and alternative energy forms are beyond the scope of this rule. The NRC recognizes its responsibility to ensure the public's health and safety, independent of the amount of spent fuel handling and transport that occurs under its regulatory oversight, now and in the future.

Comment I–12: One commenter asked how the 5-inch carbon steel temporary shield is used during welding, draining, drying, and helium backfill operations.

Response: A carbon steel temporary shield is placed over the transport cask top to shield workers from the loaded canister. Because gamma radiation is the predominant radiation emitted from the top of the canister, the 5-inch thick carbon steel temporary shield will reduce the gamma radiation dose to the workers.

Comment I–13: One commenter asked for an explanation and dates of the skyshine experiments performed at Kansas State University.

Response: The Skyshine-III, version 4.0.0 code was benchmarked with a Co^{60} skyshine experiment and a neutron skyshine calculation, both reported by Kansas State University (KSU). The Co^{60} skyshine experiment was performed for a Co^{60} source in a concrete silo with two different thickness roofs and no roof. The KSU neutron benchmark computations were performed for upward directed conical neutron point sources. Skyshine experiments are performed at KSU on an on-going basis. Discussions of skyshine experiments can be found in the book, "Radiation Shielding" by J. Kenneth Shultis and Richard E. Faw, published by Prentice Hall PTE, 1996 and also in the SKYSHINE–III PC and SKYSHINE–KSU computer code manuals. The codes and manuals are available from the Oak Ridge National Laboratory's Radiation Safety Information Computational Center.

Comment I–14: One commenter was concerned with computer models and the wording in Section 5.3 of the SER that states "input for these codes * * * appears to be appropriate." The commenter asked if the input is correct.

Response: The input data used by NAC for determining the source term of the design basis PWR and BWR nuclear fuel is acceptable. The NRC staff performed independent calculations to confirm NAC's evaluation of the source terms. The SAS2H module of the SCALE computer code uses a free form style for inputting the data that must be carefully reviewed to determine which keywords and variables have been used in the input. Also, the various fuel parameters can have a range of acceptable values that may be used in the input.

Comment I–15: Three commenters requested that Section 1.b (page 2 of 4, last paragraph) of the CoC be revised to read: "To minimize contamination of the Transportable Storage Canister (TSC) exterior and interior of the transfer cask, clean water is circulated in the gap between the transfer cask and the Transportable Storage Canister (TSC) during loading."

Response: NRC agrees with this comment. The CoC has been revised accordingly.

Comment I–16: Two commenters stated the PSER does not address the impact of the NAC–UMS cask storage system on stormwater quality.

Response: Stormwater quality is beyond the scope of this rule. Any applicable stormwater quality issues will be addressed in the 10 CFR Part 72.212 site-specific evaluations performed prior to using the cask.

Comment I–17: One commenter recommended that the wording in SER 5.4.3 be: "Consequently, final determination of compliance with 72.104(a) is the responsibility of each Independent Spent Fuel Storage Installation (ISFSI) licensee" instead of "responsibility of each applicant for a site license." The commenter commented that the reference to an "applicant for a site license" is contrary to the SER introduction which states that the cask may be used by an ISFSI general licensee under 10 CFR Part 72. An ISFSI general licensee would be required to have site-specific evaluations in accordance with 10 CFR 72.212 but would not be required to apply for a site license. Further, an ISFSI licensee would be responsible for compliance with 10 CFR 72.104(a) at all times, not just during an application for a license.

Response: The NRC agrees. The SER has been revised accordingly.

Comment I–18: Three commenters requested that the first paragraph of Section 8.2 of the SER be revised to refer to CoC Appendix A, Section A 5.6 for the transport evaluation program, not Section A 5.5.

Response: The NRC agrees with the proposed clarification of the SER, that has been revised accordingly.

Comment I–19: Two commenters expressed concerns about the implications of long-term storage of spent nuclear fuel. One of the commenters had an acute interest in NRC's evaluation of this application because of Maine Yankee's intended use of this system for long-term storage following decommissioning. The commenters expected that the DOE will not remove all the spent nuclear fuel for 20 years or longer after plants cease operations and stated that whatever storage system is chosen must ensure the public's health and safety for an extended period and must ensure that the fuel will be acceptable for removal when the DOE is prepared to take it years in the future. One commenter commented that because spent fuel with pinholes or hairline cracks may deteriorate during storage, the NRC's evaluation of the NAC–UMS system does not provide the necessary assurance that the spent fuel will be acceptable to the DOE for permanent disposal.

Response: The NRC agrees with and shares the commenters' concerns regarding the safe storage of spent nuclear fuel for any and all lengths of time.

The NRC's cask certification regulations stipulate that the user's general license to store spent fuel in a particular cask design terminates 20 years after the cask design's first use by that licensee. If the CoC has been renewed, the general license expires 20 years after the CoC's renewal date. The NRC will review spent fuel storage cask designs periodically to consider any new information, either generic to spent fuel storage or specific to cask designs, that may have arisen since issuance of the cask's CoC. The 20-year time limitation expressly provides an opportunity for the NRC to address any and all safe storage implications associated with storing spent fuel, including spent fuel whose cladding has pinhole leaks or hairline cracks, in particular casks for longer than 20 years. The NRC's initial and recertification reviews of cask designs are independent of the DOE's capabilities to accept spent fuel for permanent disposal at any point in time. However, the NRC's initial and renewal evaluations of a cask design have and will consider both the public health and safety and the retrievability of the spent fuel contents.

Regarding the DOE's acceptance of spent fuel for permanent disposal in the future and the impact of storing spent fuel cladding with pinholes or hairline cracks, Dr. Ivan Itkin, Director of the Office of Civilian Radioactive Waste Management, addressed that issue for the Maine Yankee reactor. Dr. Itkin confirmed in a letter to Maine's Governor Angus S. King dated May 3, 2000 that DOE's contract for disposal with Maine Yankee covers the acceptance, transport, and disposal of all spent nuclear fuel from the Maine Yankee reactor, regardless of the condition of the spent fuel. Dr. Itkin further noted that, although the DOE may be currently delayed in its ability to begin the disposal of the Nation's commercial spent nuclear fuel, DOE has every intention of fulfilling its contractual obligations to all of its utility customers.

Comment I–20: Two commenters requested that as a prerequisite to approving the proposed rule, the NRC acquire binding assurances from the DOE that the DOE will accept spent fuel for transport and disposal that has been stored in accordance with NRC-approved procedures. Those procedures must ensure that stored spent fuel will remain in a condition the DOE can accept. The commenters stated that these considerations and 10 CFR 72.236 preclude approval of the proposed certification until the NRC and the applicant have thoroughly analyzed and resolved critical outstanding issues.

Response: The NRC disagrees that 10 CFR 72.236 requires the NRC to obtain binding assurances from the DOE regarding the acceptance of spent fuel for disposal prior to approving a storage cask design.

DOE's efforts to develop a multi-purpose canister (MPC) program gave rise to several recent dual purpose (storage and transportation) cask design applications, including the NAC–UMS. With dual purpose designs, fuel no longer must be returned to the reactor spent fuel pool for repackaging. Dual purpose cask designs have the capability of being prepared for offsite transportation without having to handle individual fuel assemblies or return to a spent fuel pool. DOE is continuing to develop the cask design characteristics and parameters for disposal.

Regarding the DOE's acceptance of spent fuel for permanent disposal in the future, Dr. Ivan Itkin, Director of the Office of Civilian Radioactive Waste Management, recently addressed that issue for the case of Maine Yankee reactor. Dr. Itkin confirmed in a letter to Maine's Governor Angus S. King dated May 3, 2000, that DOE's contract for disposal with Maine Yankee covers the acceptance, transport, and disposal of all spent nuclear fuel from the Maine Yankee reactor, regardless of the condition of the spent fuel. Dr. Itkin further noted that, although the DOE may be currently delayed in its ability to begin the disposal of the Nation's commercial spent nuclear fuel, DOE has every intention of fulfilling its contractual obligations to all of its utility customers. Because the DOE's spent fuel acceptance criteria for ultimate disposal has not yet been formalized, it would be not be practical to preclude a storage approval on this basis at this time.

Comment I–21: Two commenters stated that the PSER does not address the necessary financial capability of a license holder to operate and maintain the NAC–UMS cask storage system over the 20-year license period.

Response: This comment is beyond the scope of this rule. The financial capabilities of a certified cask design's user, a general licensee, are not required to be addressed in an application under 10 CFR Part 72, Subpart L. The NRC published a proposed rule in the **Federal Register** on November 3, 1999 (64 FRN 59677) that would clarify the portions of 10 CFR Part 72 that apply to activities associated with the general license, a specific license, and a CoC. Requirements regarding the financial capabilities of a cask user are not identified as being applicable to activities associated with obtaining a CoC in the proposed rule.

Comment I–22: Two commenters stated that the PSER does not address the necessary technical capability of the license holder to operate and maintain the NAC–UMS cask storage system.

Response: This comment is beyond the scope of this rulemaking. Requirements on the technical capabilities of a general licensee are principally contained in §§ 72.210 and 72.212. This rulemaking addressed question on the adequacy of the NAC–UMS cask design and changes to § 72.214. Therefore, the preliminary SER was not required to address questions on the adequacy of a general licensee who may wish to use the NAC–UMS cask design. The NRC's requirements on the adequacy of a cask design are contained in Subpart L of Part 72. These requirements apply to an applicant for a CoC and a certificate holder, not a general licensee. The NRC recently added a new section (§ 72.13) to Part 72 in a final rule to clarify which requirements apply to a specific licensee, a general licensee, or a certificate holder (see 65 FR 50606; August 21, 2000). Section 72.13 specifies that requirements for the qualification of a spent fuel storage cask design do not apply to a general licensee. Rather, they apply to the certificate holder (and applicant for a CoC).

Comment I–23: One commenter preferred that sensitivity studies for the canister deceleration g-loads and the tipover analysis be done by an independent party, not by NAC, and that sensitivity checks should be done by independent evaluation.

Response: The SAR sensitivity analyses examine how the structural performance, including impact decelerations of the NAC–UMS system, varies with changes of modeling parameter values for the 24-inch vertical drop and tip-over accidents. These analyses follow standard engineering practice for evaluating applicability of analytical modeling and results. In evaluating the SAR analyses, the NRC determined that the analyses were adequate. Therefore, additional independent evaluation is not warranted.

Comment I–24: One commenter expressed concern about long-term cask materials performance issues such as lead slumping and thermal aging, specifically as reactions that could cause creation of new materials and new interactions between the newly formed materials.

Response: As part of any storage cask application review, the NRC evaluates the long term materials issues, such as thermal aging and lead slumping. The maximum calculated temperatures of the various cask materials do not exceed the temperature limits for any conditions of storage. Therefore, the NRC is assured from the analyses provided in SAR Chapter 4 that the thermal load from the spent fuel will not adversely impact the ability of those materials to perform their intended functions during storage. Further, lead slumping would only be a concern for the lead in the annulus of the transfer cask while the TSC is contained inside (i.e., during transfer of the fuel from the spent fuel pool to the VCC). When the transfer cask is not being used, the lead is assumed to be at ambient temperatures. As noted in SER Section 3.1.4.2, no softening or flow of lead is expected in the annulus due to lead slumping.

Comment I–25: One commenter stated that Charpy testing of materials needs to be verified before any casks are loaded. The commenter asked who verifies the Charpy test of materials, where is the verification in the documents, and is the information clear.

Response: In general, some steel materials require minimum Charpy impact properties for structural applications as required by the governing consensus standard or codes (*e.g.*, ASTM, ASME Boiler and Pressure Vessel Code, etc.). The NAC–UMS storage cask utilizes several types of steel including stainless and carbon steel. The PWR support disks are fabricated with ASME SA–693, Type 630 (H1150) precipitation-hardened steel. A typical minimum impact absorption energy requirement for Type 630 stainless steel is 48 foot-pounds at −110 °F. Therefore, for the NAC–UMS storage cask, there is enough ductility in the material so that fracture of the material is not expected at the minimum specified service temperature of −40 °F. The BWR support disks are fabricated from ASME SA–533, Type B, carbon steel. As noted in SER Section 3.1.4.1, the applicant has committed to specifying Charpy impact testing for each plate of material in accordance with ASME Code Section III, Subsection NG–2320. With regard to testing the Charpy impact energy, it is the responsibility of the supplier of the material to perform the necessary tests in accordance with the purchase order and to document the results of those tests on the Certified Materials Test Record that accompanies each lot of material shipped to a customer. For the NAC–UMS cask, documentation for the materials used to fabricate a cask will be controlled in accordance with a quality

control program that conforms to the requirements of 10 CFR part 72, Subpart G.

Comment I–26: One commenter asked if ferritic steel is different than carbon steel. The commenter asked if the ferritic steel anchor base plate and optional lifting anchors should be stainless steel.

Response: Ferritic steel is one of several classifications of stainless steel. In general, stainless steels are more resistant to rusting than plain-carbon and low-alloy steels. Stainless steels also have superior corrosion resistance because they contain relatively large amounts of alloying elements (*e.g.*, chromium). Carbon steels, also known as plain carbon steels, have no minimum quantity for any alloying elements and contain only a small amount of elements other than the commonly accepted carbon, silicon, manganese, copper, sulfur, and phosphorus. Carbon steels are generally much less corrosion resistant than stainless steels.

The use of the ASTM A537, Class 2, carbon steel for the VCC lifting lug and its anchor plate is NAC's choice for meeting its design objectives. SAR Subsection 3.4.3.1.3 evaluates the lifting lug and its anchor plate, that has been reviewed and determined structurally adequate in SER Subsection 3.2.3.4.

Comment I–27: One commenter asked what the word "chemical" means in the term "interlocking chemical lead bricks" in Section 3.1.4.2 of the SER and what are the chemicals. The commenter also asked what could the chemicals create if water leaked into the lead chamber.

Response: Interlocking chemical lead bricks are used in the transfer cask for gamma shielding. There are no chemicals added to the lead. The term "chemical" refers to a grade of lead that is specified in the ASTM Standard B29 for lead materials. The grade specified as "Chemical-Copper Lead" is almost identical to the "Pure Lead" grade. Chemical-copper lead has 99.90% elemental lead (versus 99.94% elemental lead for the Pure Lead grade) and has 0.04% more alloying elements (*e.g.*, copper) than Pure Lead. Because the lead is encased between the inner and outer shells and the top and bottom end plates of the transfer cask, the lead is not expected to come in contact or react with the spent fuel pool water.

Comment I–28: One commenter asked several questions about the NS-4-FR shielding material including: what other cask systems use NS-4-FR; how long has NS-4-FR been in use; what does the word "reliably" mean as used in SER Section 3.1.4.2; how has the NS-4-FR been tested for fire resistance; what can happen if the NS-4-FR gets wet because of a transfer cask leak; where NS-4-FR has been tested to prove it will work well in long term dry cask storage; and if the NRC has checked the materials sheets from the manufacturer of NS-4-FR for the specifications.

Response: NS-4-FR has been used as a neutron shield in two licensed storage casks in the United States for up to 10 years and in more than 50 licensed casks in Japan, Spain and the United Kingdom. Various research groups have performed both radiation and thermal stability testing over the last 15 years. Data from these tests adequately demonstrate long-term thermal and radiation stability. Further, the NRC has not received any reports that the shielding effectiveness of the NS-4-FR material has become degraded. Therefore, the NRC staff believes that this material is reliable for the purpose of shielding neutrons from personnel and the environment.

The NS-4–FR material consists of many elements including hydrogen. The chemistry of the material (*e.g.*, the way the elements are bonded to one another) contribute significantly to the fire retardant capability of the NS-4-FR. Even though the material contains hydrogen, the ingredients were selected so the NS-4-FR resists fire and the generation of hydrogen gas that could cause the material to combust. Data supplied by the applicant show that approximately 90% of the gases that evolve from the NS-4-FR material when it is exposed to relatively high temperatures consists of water.

The neutron shields in the transfer cask and the VCC shield plug are enclosed in welded steel shells so water and direct flames from a fire cannot get in contact with the NS-4-FR. If water were to contact NS-4-FR, the material is inert. Therefore, gases will not form due to contact between the NS-4-FR and water. Further, if fire were to contact the shield material, data show that the material only becomes charred on the surface and rapid extinguishing of the flame after the source of the flame is removed.

Thermal and radiation testing of the NS-4-FR material was conducted in the United States by Bisco Products, Inc. and by several Japanese organizations to assess the material's long term performance under dry cask storage conditions. As part of the SAR review, the NRC staff routinely checks any manufacturer specification sheets to ensure that the material is being used in accordance with manufacturer's recommendations.

Comment I–29: One commenter asked if Keeler & Long and Carboline epoxy enamel paint has been checked for use on casks in actual situations. The commenter also asked whether paint patch-up jobs exacerbate corrosion.

Response: The Keeler & Long E-Series Epoxy and Carboline 890 paint coatings that are used to coat the exposed surfaces of the transfer cask are routinely recommended by the paint manufacturers for use in nuclear power plant applications. Further, these particular paint coatings have been used extensively under radiation and spent fuel pool water immersion conditions. Therefore, the NRC staff agrees with the applicant's statements in SAR Section 3.4.1.2.4 that there will be no adverse effects from contact between either of the paint coatings and spent fuel pool water because the paint will be applied in accordance with the paint manufacturer's recommendations. With regard to repainting areas where the coating has been removed (*e.g.*, by scratching), paint patching will be done in accordance with the paint manufacturer's recommendations and the transfer cask maintenance program described in SAR Chapter 9, and is specifically performed to not exacerbate corrosion.

Comment I–30: One commenter asked what is the date of ASME Code Section III, Part D, referenced in Section 3.1.4.6 of the SER. The commenter also asked what are the other acceptable references and their dates, and that the references be included in the SER.

Response: The 1995 Edition of the ASME Boiler and Pressure Vessel Code (B&PVC), Section II, Part D, is referenced in Section 3.1.4.6 of the SER. Other acceptable sources of information are referenced in SAR Section 3.2 and include: the 4th Editions of the Metallic Materials Specification Handbook, 1992; Military handbook MIL–HDBK–5G, U.S. Department of Defense, 1994; ASME B&PVC Code Cases—Nuclear Components, 1995 Edition, Code Case NC–71–17; and the Genden Engineering Services & Construction NS–4–FR Product Data Sheet.

Comment I–31: One commenter stated that the dry spent fuel loading and unloading referenced in Evaluation Finding F3.9 should not be in the SER unless it has been evaluated. The commenter asked what dry loading procedures are being referenced.

Response: The SAR procedures only address wet loading and unloading fuel from the NAC–UMS storage cask. Dry loading or unloading procedures are not included with this application and were not a part of the NRC's review. The SER finding was modified to indicate that

the materials are compatible with wet loading and unloading operations and facilities.

Summary of Final Revisions

Based on the responses above, the NRC has modified the CoC, the TSs and the SER as follows:

- LCO 3.2.2 has been revised (Comment B–7).
- TS A 3.1.7, "Fuel Cooldown Requirements" associated with canister unloading procedures has been deleted from the TS (Comment C–2).
- Parameters provided in B 3.4(6) of the "Approved Contents and Design Features" in Appendix B of CoC 1015 have been removed from the TS. This same set of site concrete pad and soil parameters is relevant to the tip-over analysis are being summarized in SAR Subsection 11.2.12 (Comment C–17).
- Section B 2.1.2 of the "Approved Contents and Design Features" has been edited (Comment D–4).
- B 2.2.3 of the "Approved Contents and Design Features" has been revised (Comment D–9).
- Tables B2–2 and B2–3 of the "Approved Contents and Design Features" have been revised. (Comment D–10).
- B 3.5.2.1 (4) of the Approved Contents and Design Features has been revised (Comment D–12).
- Table B3–2 of the Approved Contents and Design Features has been revised (Comment D–13).
- SER Subsection 3.1.1.3 has been revised (Comment F–4).
- SAR Drawing 790–584 has been revised to permit the use of ASME SA182 as an alternate to SA240 for both the shield and structural lids of the TSC (Comment F–5).
- The second frequency of surveillance requirement (SR) 3.1.1.1 and SR 3.1.1.2 within LCO 3.1.1 has been revised (Comment G–3).
- SR 3.1.6.2 has been deleted (Comment G–4).
- LCO 3.1.5 (Canister Helium Leak Rate) has been revised (Comment H–4).
- Section A 5.2 [after A 5.2 (n)]of the TS has been revised (Comment H–6).
- Table A5–1 of the TS has been revised (Comment H–7).
- The SAR title on the CoC has been revised (Comment I–1).
- Section 1.b (page 2 of 4, last paragraph) of the CoC has been revised (Comment I–15).
- SER 5.4.3 has been revised (Comment I–17).
- Section 8.2 of the SER been revised to refer to CoC Appendix A, Section A 5.6 for the transport evaluation program, while the Section A 5.5 reference to the transport evaluation program has been deleted (Comment I–18).
- SER Evaluation Finding F3.9 has been revised (Comment I–31).

Agreement State Compatibility

Under the "Policy Statement on Adequacy and Compatibility of Agreement State Programs" approved by the NRC on June 30, 1997, and published in the **Federal Register** on September 3, 1997 (62 FR 46517), this rule is classified as compatibility Category "NRC." Compatibility is not required for Category "NRC" regulations. The NRC program elements in this category are those that relate directly to areas of regulation reserved to the NRC by the Atomic Energy Act of 1954, as amended (AEA), or the provisions of Title 10 of the Code of Federal Regulations. Although an Agreement State may not adopt program elements reserved to NRC, it may wish to inform its licensees of certain requirements via a mechanism that is consistent with the particular State's administrative procedure laws, but does not confer regulatory authority on the State.

Voluntary Consensus Standards

The National Technology Transfer Act of 1995 (Pub. L. 104–113) requires that Federal agencies use technical standards that are developed or adopted by voluntary consensus standards bodies unless the use of such a standard is inconsistent with applicable law or otherwise impractical. In this final rule, the NRC is adding the NAC–UMS cask system to the list of NRC-approved cask systems for spent fuel storage in 10 CFR 72.214. This action does not constitute the establishment of a standard that establishes generally-applicable requirements.

Finding of No Significant Environmental Impact: Availability

Under the National Environmental Policy Act of 1969, as amended, and the Commission's regulations in Subpart A of 10 CFR part 51, the NRC has determined that this rule is not a major Federal action significantly affecting the quality of the human environment and therefore, an environmental impact statement is not required. This final rule adds an additional cask to the list of approved spent fuel storage casks that power reactor licensees can use to store spent fuel at reactor sites without additional site-specific approvals from the NRC. The environmental assessment and finding of no significant impact on which this determination is based are available for inspection at the NRC Public Document Room, 11555 Rockville Pike, Rockville, MD and electronically at *http://ruleforum.llnl.gov*. Single copies of the environmental assessment and finding of no significant impact are available from Stan Turel, Office of Nuclear Material Safety and Safeguards, U.S. Nuclear Regulatory Commission, Washington, DC 20555, telephone (301) 415–6234, e-mail spt@nrc.gov.

Paperwork Reduction Act Statement

This final rule does not contain a new or amended information collection requirement subject to the Paperwork Reduction Act of 1995 (44 U.S.C. 3501 *et seq.*). Existing requirements were approved by the Office of Management and Budget, approval number 3150–0132.

Public Protection Notification

If a means used to impose an information collection does not display a currently valid OMB control number, the NRC may not conduct or sponsor, and a person is not required to respond to, the information collection.

Regulatory Analysis

On July 18, 1990 (55 FR 29181), the Commission issued an amendment to 10 CFR part 72. The amendment provided for the storage of spent nuclear fuel in cask systems with designs approved by the NRC under a general license. Any nuclear power reactor licensee can use cask systems with designs approved by the NRC to store spent nuclear fuel if it notifies the NRC in advance, the spent fuel is stored under the conditions specified in the cask's CoC, and the conditions of the general license are met. In that rule, four spent fuel storage casks were approved for use at reactor sites and were listed in 10 CFR 72.214. That rule envisioned that storage casks certified in the future could be routinely added to the listing in 10 CFR 72.214 through the rulemaking process. Procedures and criteria for obtaining NRC approval of new spent fuel storage cask designs were provided in 10 CFR Part 72, Subpart L.

The alternative to this action is to withhold approval of this new design and issue a site-specific license to each utility that proposes to use the casks. This alternative would cost both the NRC and utilities more time and money for each site-specific license. Conducting site-specific reviews would ignore the procedures and criteria currently in place for the addition of new cask designs that can be used under a general license, and would be in conflict with Nuclear Waste Policy Act (NWPA) direction to the Commission to approve technologies for the use of spent fuel storage at the sites of civilian nuclear power reactors without, to the

maximum extent practicable, the need for additional site reviews. This alternative also would tend to exclude new vendors from the business market without cause and would arbitrarily limit the choice of cask designs available to power reactor licensees. This final rule will eliminate the above problems and is consistent with previous NRC actions. Further, the rule will have no adverse effect on public health and safety.

The benefit of this rule to nuclear power reactor licensees is to make available a greater choice of spent fuel storage cask designs that can be used under a general license. The new cask vendors with casks to be listed in 10 CFR 72.214 benefit by having to obtain NRC certificates only once for a design that can then be used by more than one power reactor licensee. The NRC also benefits because it will need to certify a cask design only once for use by multiple licensees. Casks approved through rulemaking are to be suitable for use under a range of environmental conditions sufficiently broad to encompass multiple nuclear power plants in the United States without the need for further site-specific approval by NRC. Vendors with cask designs already listed may be adversely impacted because power reactor licensees may choose a newly listed design over an existing one. However, the NRC is required by its regulations and NWPA direction to certify and list approved casks. This rule has no significant identifiable impact or benefit on other Government agencies.

Based on the above discussion of the benefits and impacts of the alternatives, the NRC concludes that the requirements of the final rule are commensurate with the Commission's responsibilities for public health and safety and the common defense and security. No other available alternative is believed to be as satisfactory, and thus, this action is recommended.

Regulatory Flexibility Certification

In accordance with the Regulatory Flexibility Act of 1980 (5 U.S.C. 605(b)), the NRC certifies that this rule will not, if promulgated, have a significant economic impact on a substantial number of small entities. This rule affects only the licensing and operation of nuclear power plants, independent spent fuel storage facilities, and NAC. The companies that own these plants do not fall within the scope of the definition of "small entities" set forth in the Regulatory Flexibility Act or the Small Business Size Standards set out in regulations issued by the Small Business Administration at 13 CFR part 121.

Backfit Analysis

The NRC has determined that the backfit rule (10 CFR 50.109 or 10 CFR 72.62) does not apply to this rule because this amendment does not involve any provisions that would impose backfits as defined in the backfit rule. Therefore, a backfit analysis is not required.

Small Business Regulatory Enforcement Fairness Act

In accordance with the Small Business Regulatory Enforcement Fairness Act of 1996, the NRC has determined that this action is not a major rule and has verified this determination with the Office of Information and Regulatory Affairs, Office of Management and Budget.

List of Subjects in 10 CFR Part 72

Criminal penalties, Manpower training programs, Nuclear materials, Occupational safety and health, Reporting and recordkeeping requirements, Security measures, Spent fuel.

For the reasons set out in the preamble and under the authority of the Atomic Energy Act of 1954, as amended; the Energy Reorganization Act of 1974, as amended; and 5 U.S.C. 553; the NRC is proposing to adopt the following amendments to 10 CFR part 72.

PART 72—LICENSING REQUIREMENTS FOR THE INDEPENDENT STORAGE OF SPENT NUCLEAR FUEL AND HIGH-LEVEL RADIOACTIVE WASTE

1. The authority citation for Part 72 continues to read as follows:

Authority: Secs. 51, 53, 57, 62, 63, 65, 69, 81, 161, 182, 183, 184, 186, 187, 189, 68 Stat. 929, 930, 932, 933, 934, 935, 948, 953, 954, 955, as amended, sec. 234, 83 Stat. 444, as amended (42 U.S.C. 2071, 2073, 2077, 2092, 2093, 2095, 2099, 2111, 2201, 2232, 2233, 2234, 2236, 2237, 2238, 2282); sec. 274, Pub. L. 86–373, 73 Stat. 688, as amended (42 U.S.C. 2021); sec. 201, as amended, 202, 206, 88 Stat. 1242, as amended, 1244, 1246 (42 U.S.C. 5841, 5842, 5846); Pub. L. 95–601, sec. 10, 92 Stat. 2951 as amended by Pub. L. 10d—48b, sec. 7902, 10b Stat. 31b3 (42 U.S.C. 5851); sec. 102, Pub. L. 91–190, 83 Stat. 853 (42 U.S.C. 4332); secs. 131, 132, 133, 135, 137, 141, Pub. L. 97–425, 96 Stat. 2229, 2230, 2232, 2241, sec. 148, Pub. L. 100–203, 101 Stat. 1330–235 (42 U.S.C. 10151, 10152, 10153, 10155, 10157, 10161, 10168).

Section 72.44(g) also issued under secs. 142(b) and 148(c), (d), Pub. L. 100–203, 101 Stat. 1330–232, 1330–236 (42 U.S.C. 10162(b), 10168(c),(d)). Section 72.46 also issued under sec. 189, 68 Stat. 955 (42 U.S.C. 2239); sec. 134, Pub. L. 97–425, 96 Stat. 2230 (42 U.S.C. 10154). Section 72.96(d) also issued under sec. 145(g), Pub. L. 100–203, 101 Stat. 1330–235 (42 U.S.C. 10165(g)). Subpart J also issued under secs. 2(2), 2(15), 2(19), 117(a), 141(h), Pub. L. 97–425, 96 Stat. 2202, 2203, 2204, 2222, 2244, (42 U.S.C. 10101, 10137(a), 10161(h)). Subparts K and L are also issued under sec. 133, 98 Stat. 2230 (42 U.S.C. 10153) and sec. 218(a), 96 Stat. 2252 (42 U.S.C. 10198).

2. In § 72.214, CoC 1015 is added to read as follows:

§ 72.214 List of approved spent fuel storage casks.

* * * * *

Certificate Number: 1015.
SAR Submitted by: NAC International, Inc.
SAR Title: Final Safety Analysis Report for the NAC–UMS Universal Storage System.
Docket Number: 72–1015.
Certificate Expiration Date: November 20, 2020.
Model Number: NAC–UMS.

* * * * *

Dated at Rockville, Maryland, this 2nd day of October ,2000.

For the Nuclear Regulatory Commission.

William D. Travers,

Executive Director for Operations.

[FR Doc. 00–26888 Filed 10–18–00; 8:45 am]
BILLING CODE 7590–01–P

DEPARTMENT OF COMMERCE

Bureau of Export Administration

15 CFR Part 705

[Docket No. 000601164–0164–01]

RIN 0694–AC07

Effect of Imported Articles on the National Security

AGENCY: Bureau of Export Administration, Commerce.

ACTION: Final rule.

SUMMARY: The Department of Commerce is amending its regulation on the "Effect of Imported Articles on the National Security" to reduce the number of copies of a request or application for an investigation to be filed with the Department from 12 copies to 1 copy, plus the original, thereby reducing the burden on the applicant.

EFFECTIVE DATE: This rule is effective November 20, 2000.

FOR FURTHER INFORMATION CONTACT: Brad Botwin, Director, Strategic Analysis Division, Office of Strategic Industries and Economic Security, Room 3876,

TRANSCRIPT OF PROCEEDINGS

NORTHERN STATES POWER COMPANY,	)	
Plaintiff,	)	
v.	)	No. 99-5096
THE UNITED STATES,	)	
Defendant.	)	

LIVE TAPE

(The following transcript was transcribed from an audiocassette tape provided by Spriggs & Hollingsworth to Heritage Reporting Corporation on May 9, 2000.)

Pages: 1 through 25

Place: Washington, D.C.

Date: May 3, 2000

HERITAGE REPORTING CORPORATION
Official Reporters
1220 L Street, NW, Suite 600
Washington, D.C.
(202) 628-4888

1 IN THE UNITED STATES COURT OF APPEALS
2 FOR THE FEDERAL CIRCUIT
3 NORTHERN STATES POWER COMPANY,)
4 Plaintiff,)
5 v.)No. 99-5096
6 THE UNITED STATES,)
7 Defendant.)
8 4th Floor
9 National Courts Building
10 717 Madison Place, N.W.
11 Washington, D.C. 20005
12 Wednesday,
13 May 3, 2000
14 The parties met, pursuant to the Notice of the
15 Court.
16 BEFORE: HON. H. ROBERT MAYER
17 Chief Judge
18 HON. DANIEL FRIEDMAN
19 Judge
20 HON. PAULINE NEWMAN
21 Judge
22 APPEARANCES:
23 For the Plaintiff:
24 Alex Tomaszczuk
25 Jay Silberg
26 Devon Hewitt
27 Shaw, Pittman, Potts & Trowbridge
28 1676 International Drive
29 McLean, Virginia 22102-4835
30 (703)790-7940

1 APPEARANCES (Continued):
2 For the Defendant:
3 HAROLD D. LESTER, ESQUIRE
4 DAVID M. COHEN, ESQUIRE
5 DAVID W. OGDEN, ESQUIRE
6 DORIS S. FINNERMAN, ESQUIRE
7 U.S. Department of Justice
8 Civil Division
9 Commercial Litigation Branch
10 1100 L Street, N.W.
11 Washington, D.C. 20530
12 (202) 307-6288
13 MARC JOHNSTON, ESQUIRE
14 L. DOW DAVIS, IV, ESQUIRE
15 JANE K. TAYLOR, ESQUIRE
16 U.S. Department of Energy
17 Office of General Counsel
18 1000 Independence Avenue, S.W.
19 Washington, D.C. 20585

1 Appeals. That's the way that it was always done prior to
2 the Contract Disputes Act. And that was pretty routine.
3 And that's the Supreme Court in Anthony Grace said,
4 it is the very rare exception when that process is not to be
5 followed when a contractor can circumvent that process, a
6 very rare circumstance and has to be shown by the contract
7 by clear evidence that that remedy is going to be inadequate
8 or unavailable.
9 And here, all we have is speculation that the
10 utilities might not get everything that they think they are
11 entitled to. And --
12 **Senior Judge Friedman**: Mr. Lester, I want to ask you
13 something. In the second Northern States Power case in the
14 D.C. Circuit, the mandamus case, did they focus upon the
15 distinction between a remedy, administrative remedy, under
16 the contract and assume breach of contract? Was that going
17 into a law in that case?
18 **Mr. Lester**: Your Honor, the main focus of the
19 mandamus was to demand specific performance by the --
20 against DOE.
21 **Senior Judge Friedman**: Right. And the Court refused to
22 grant that, saying that while the first two elements of
23 mandamus were met, they failed to show that the third element
24 was met, because they have a potentially adequate remedy as set
25 under the contract -- something like that. But I don't

1 think that can fairly be read as deciding the issue we have
2 before us today.
3 All that's saying is we're not going to give you
4 mandamus. We're not going to order you to perform, because
5 then it looks as though you have another possible remedy
6 under the contractual arrangement.
7 **Mr. Lester**: That's correct, Your Honor. And, in
8 fact, the utilities did discuss in detail in their briefs --
9 it's my recollection that they discussed in detail in their
10 briefs -- that they couldn't get any relief under the
11 avoidable delays clause, and they couldn't get any relief at
12 all, unless they asked for adequate relief and they have a
13 specific performance.
14 And the D.C. Circuit had to decide -- it did
15 decide -- that, in fact, they could not, would not order of
16 specific performance, because this was a potential adequate
17 remedy under the contract itself. Presumably, that refers
18 to the avoidable delays clause because that is --
19 **Senior Judge Friedman**: Well, what we now have to decide is
20 what was that remedy. Was it the suit in the Court of Federal
21 Claims? Or was it invoking the administrative Procedures
22 **Mr. Lester**: Correct. As we discussed in our
23 brief, Your Honor -- and I'll just refer to the brief --
24 under the collateral estoppel issue, that we believe that the
25 D.C. Circuit did order them to pursue the relief under the

1 contract under the avoidable delays clause. But even if
2 this Court were to independently evaluate that, the clause
3 itself clearly is very broad. It encompasses any delay in
4 acceptance of SNF.
5 There's no reason to believe, at this point, that
6 there is any distinction or that the relief would not be
7 available under the contract through the administrative
8 process. All we have so far is speculation --
9 **Chief Judge Mayer**: Let's not keep repeating the same
10 points over and over --
11 **Mr. Lester**: One I would like --
12 **Chief Judge Mayer**: If it's something new, fine.
13 Otherwise, you don't need to use your time.
14 **Mr. Lester**: One I would like to address, Your
15 Honor, is Judge Newman's question -- it may have been in the
16 Yankee-Atomic argument, and I apologize for my delay in
17 response, but the length of time of the contract, putting
18 this 12-year delay into context, obviously, there is a
19 potential of 10,000 years that the government will have to
20 store this nuclear fuel.
21 But in addition to that, I wanted to make sure the
22 Court understood the process for acceptance of this nuclear
23 fuel. Not all of the nuclear fuel would be accepted on
24 January 31, 1998. This was going to be a lengthy, lengthy
25 process and it still will be, that the Department of Energy

1 anticipated the format to mean it would encompass 50, 60, or 70
2 years. So not all utility SNF would be accepted on January '98.
3 It could be 70 years from that date before
4 everything would be accepted. And it is possible that with
5 technological advances, DOE will be able to accelerate the
6 acceptance so that there are no damages as a result of this
7 delay in beginning acceptance, so that the administrative
8 remedy, in fact, is even more likely or possible to resolve
9 the damage claims by the utilities.
10 This is a heavily regulated industry. The contract
11 -- the utilities, certainly, knew what they were doing when
12 they were signing these contracts. They knew that this was
13 heavily regulated. They needed --
14 **Judge Newman:** But they had no choice, did they? And
15 I suppose the most serious of the problems is, that spent
16 nuclear fuel is not going to go away. It must be treated.
17 Some kind of performance is required, which explains, I
18 think quite clearly, why the action that was brought as a
19 mandamus at that stage.
20 What was wanted was performance, not damages.
21 They don't have performance. We have an act of Congress
22 which gave the department 15 years to perform. For whatever
23 reason, that didn't take place. But in terms of looking at
24 the overall bargain, I suppose, this is something that will
25 have to be faced, whatever this tribunal is.

1 The overall bargain that took place, the
2 assessments that were placed on the utilities and their
3 compliance. Not receiving that bargain...something has
4 slipped.
5 So the secondary question that one expects will be reached by
6 whatever tribunal, whether it's a return to the contracting
7 officer or to the Court, is the consequences of the fact that
8 it didn't work out the way it was understood to work out.
9 And it still goes full cycle to the fundamental
10 question of whether that sort of relief under these
11 circumstances is something that is fairly placed with an
12 obligation to continue seeking an administrative remedy.
13 **Mr. Lester**: Well, that is the heart of the case,
14 Your Honor, whether or not the clause, any delays in
15 acceptance of SNF encompasses this type of delay. And the
16 language is plain. This is a heavily regulated industry.
17 People knew there was going to be a delay despite that.
18 **Chief Judge Mayer**: We've heard that. We've heard that.
19 **Mr. Lester**: All right. We would request that the
20 Court affirm the Northern States decision. Thank you, Your
21 Honor.
22 **Chief Judge Mayer**: Thank you.
23 **Mr. Tomaszczuk**: A few additional points, Your Honor.
24 The government has never said what the remedy under the
25 delays clause is. And indeed, a careful reading of Judge

1 Merow's opinion in the Yankee case reveals Judge Merow's
2 frustration with that very point.
3 It is the government that is speculating as to
4 the remedy. But it is this Court's obligation under the
5 Wunderlich Act to exercise its jurisdiction and
6 determine whether that remedy in the contract is a
7 reasonably adequate substitute for our damages or legal
8 remedies.
9 That is the Court's obligation. It is
10 unfortunately the obligation that Judge Wiese deferred -- we
11 submit, improperly -- to the Department of Energy.
12 Second, with respect to the findings of the D.C.
13 Circuit, we respectfully submit that the D.C. Circuit did
14 not direct us, as Mr. Lester just said, to pursue our
15 remedies under the contract.
16 You can read all of the four decisions of the D.C.
17 Circuit going back to Indiana-Michigan, Northern States
18 Power Company, the May 5th order of the D.C. Circuit in
19 Northern States, and the July 2nd Order, and you will not
20 find that language anywhere in any of those decisions.
21 And, indeed, we submit in the May 5th Order, the
22 D.C. Circuit specifically referred to, and I'm quoting and
23 this is at page 159 of the appendix, "Suits based on the
24 contract may present issues of the permissible forms of
25 equitable adjustment."

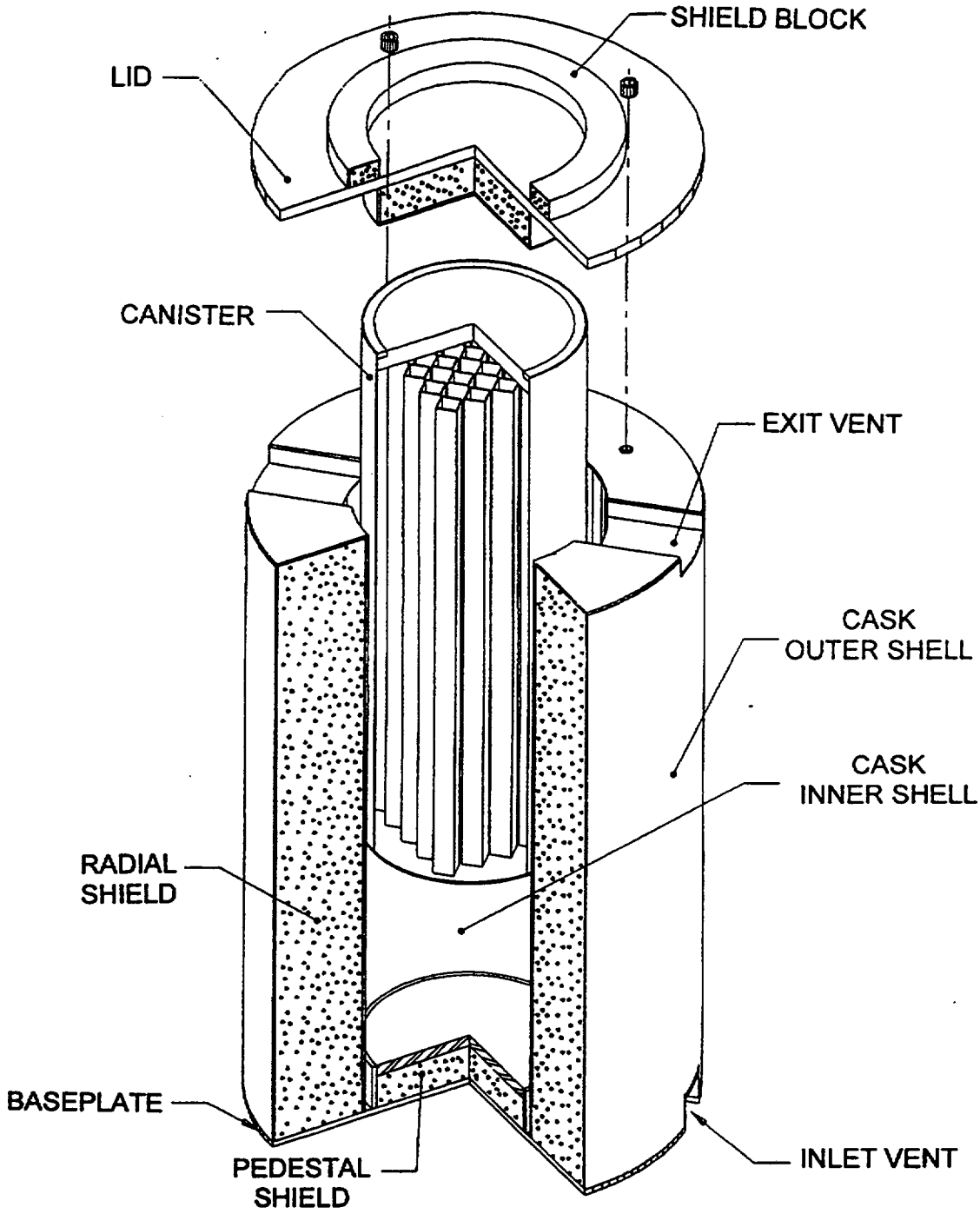

Figure 1.3-1

HI-STORM 100 CASK SYSTEM COMPONENTS

PRIVATE FUEL STORAGE FACILITY
SAFETY ANALYSIS REPORT

Figure 1.1-1 Major Components of the Universal Storage System (in Vertical Concrete Cask Loading Configuration)

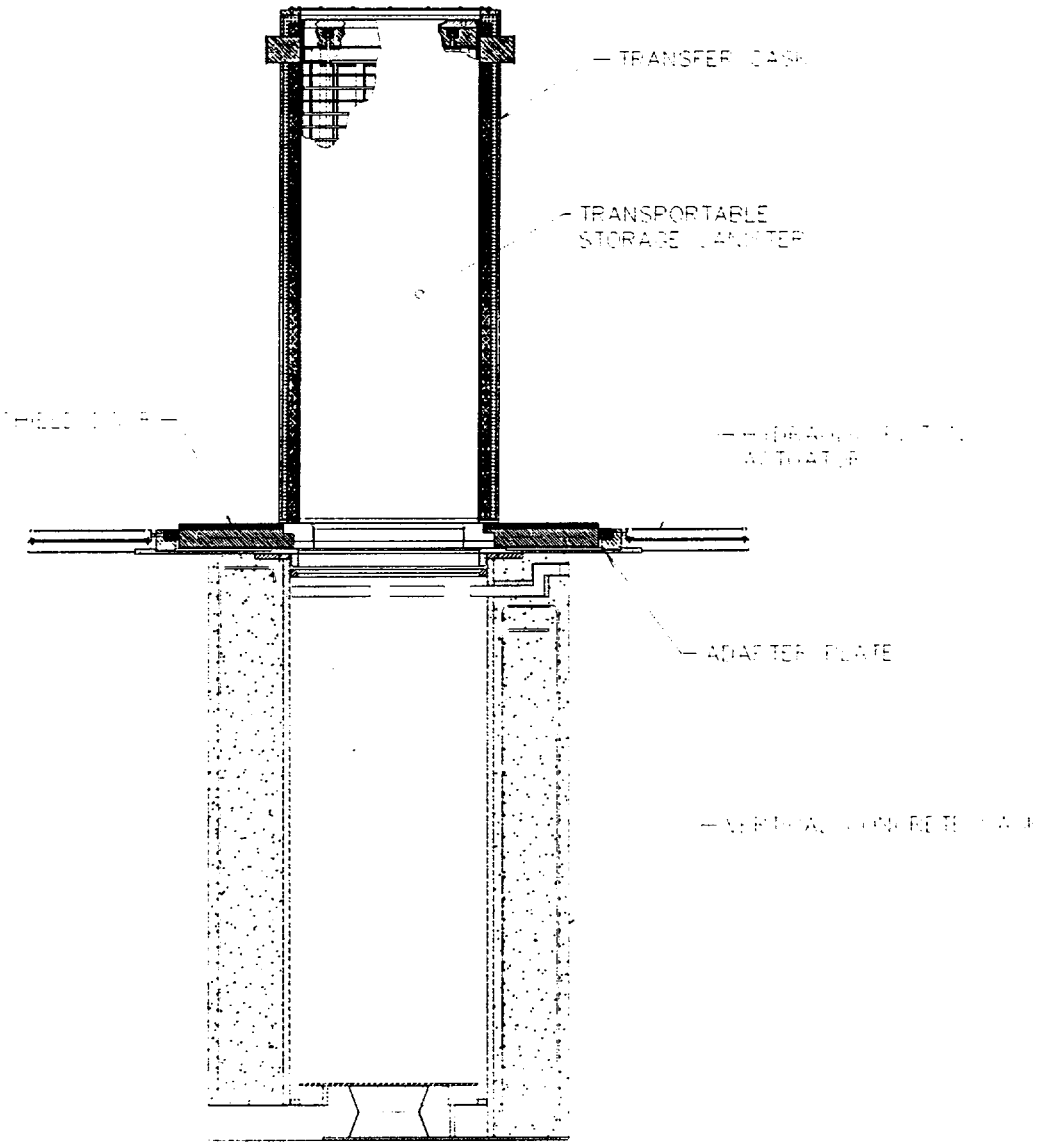

Figure 1.1-2 Transportable Storage Canister Containing PWR Spent Fuel Basket

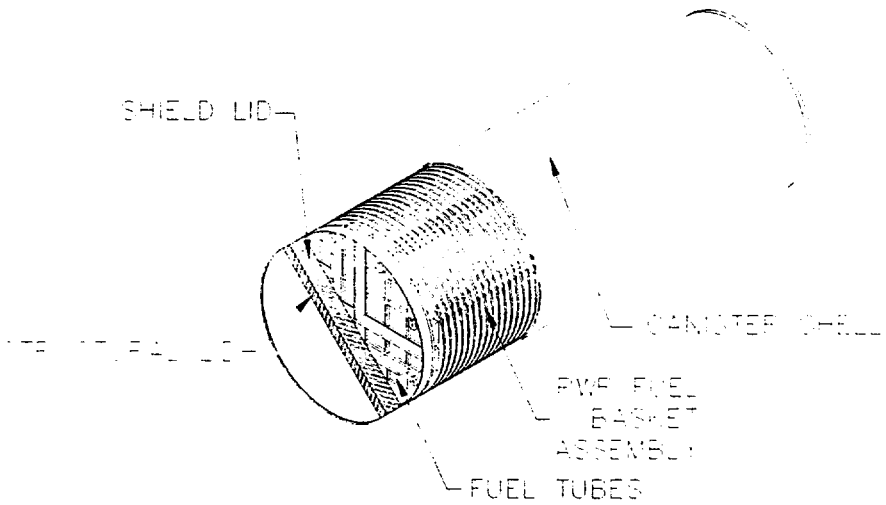

Figure 1.1-3 Transportable Storage Canister Containing BWR Spent Fuel Basket

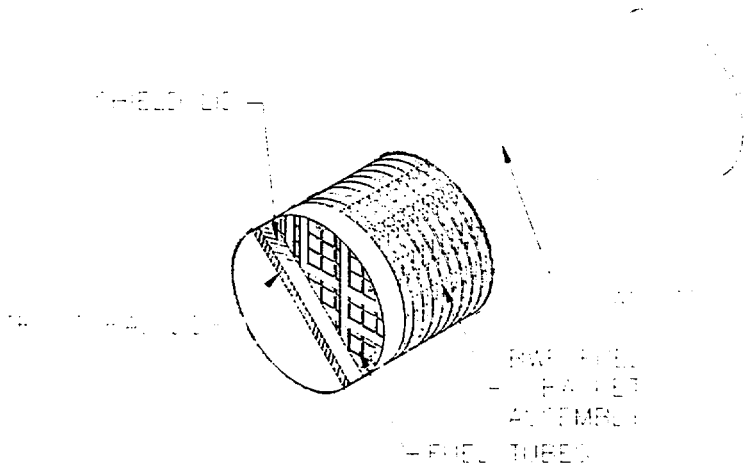

Figure 1.2-1 Vertical Concrete Cask

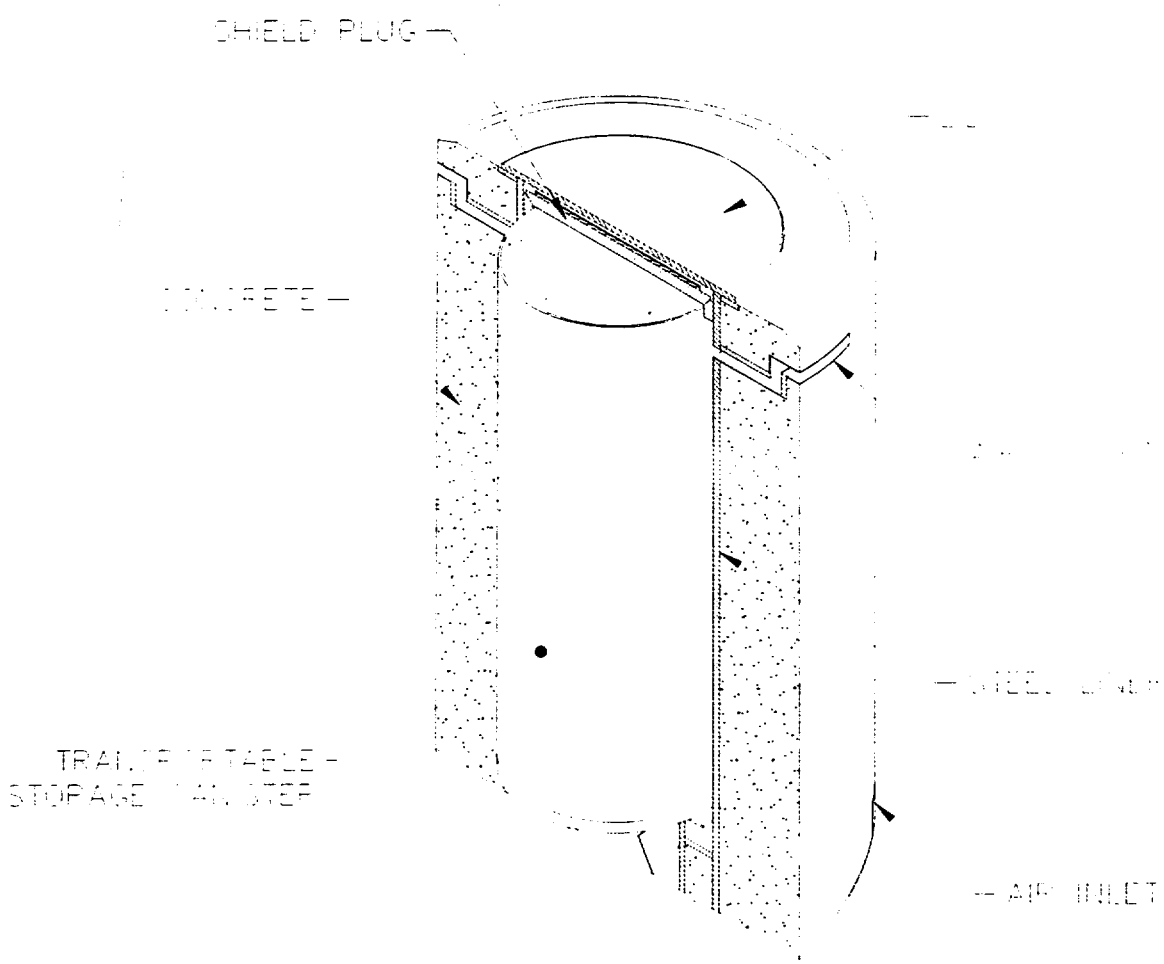

Figure 1.2-2 Transfer Cask

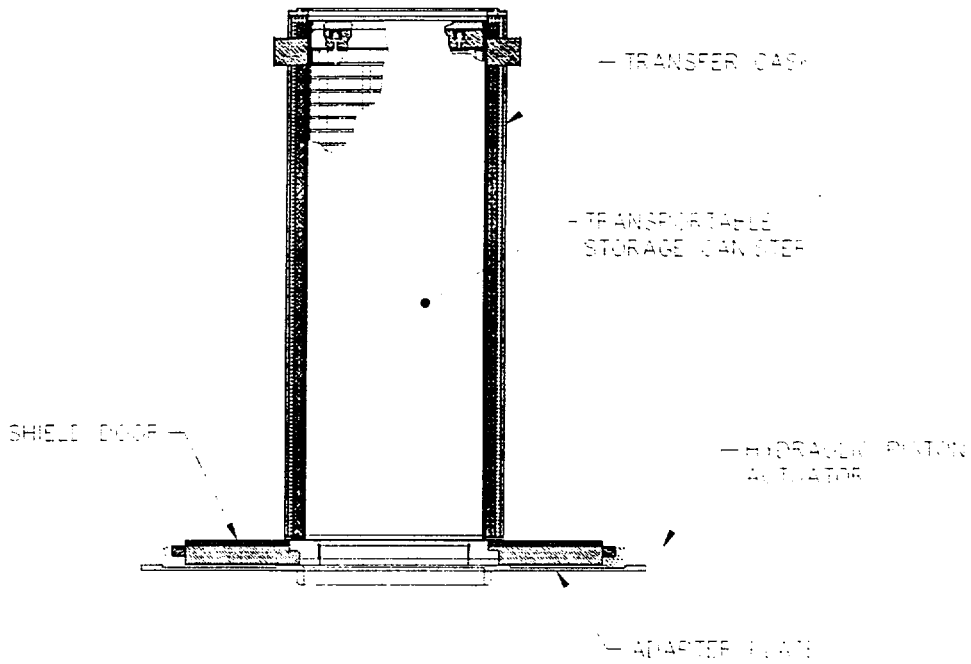

Figure 1.2-3 Transport Configuration of the Universal Transport Cask

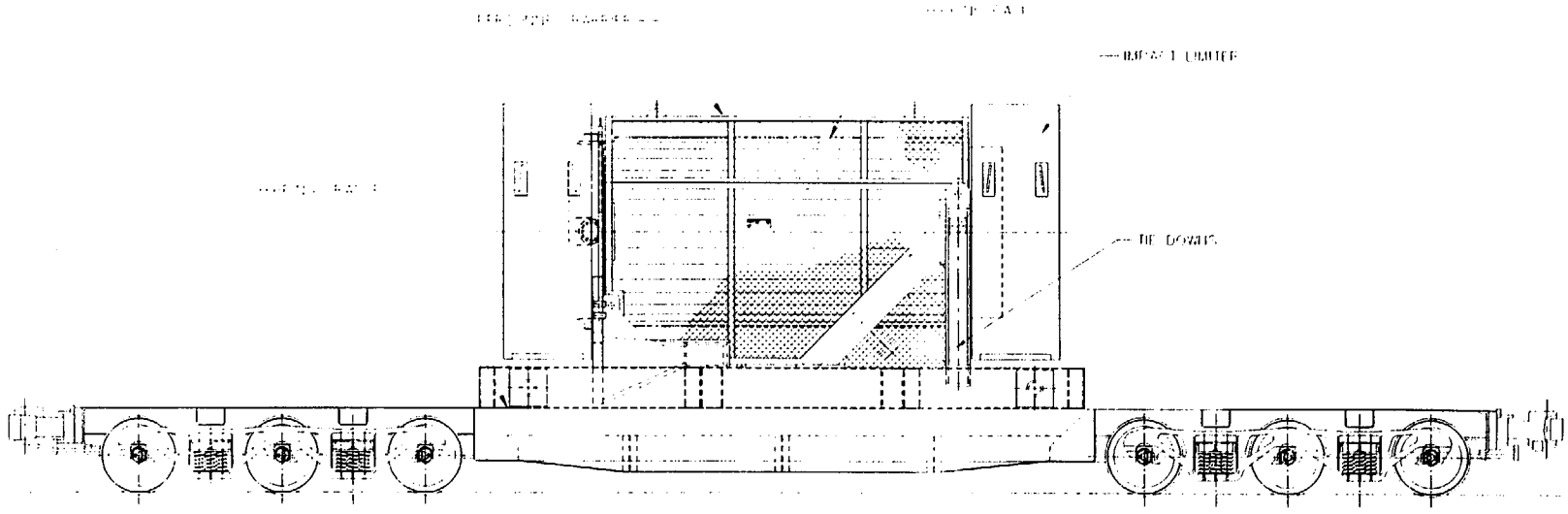

Figure 1.2-4 Transfer Cask and Canister Arrangement

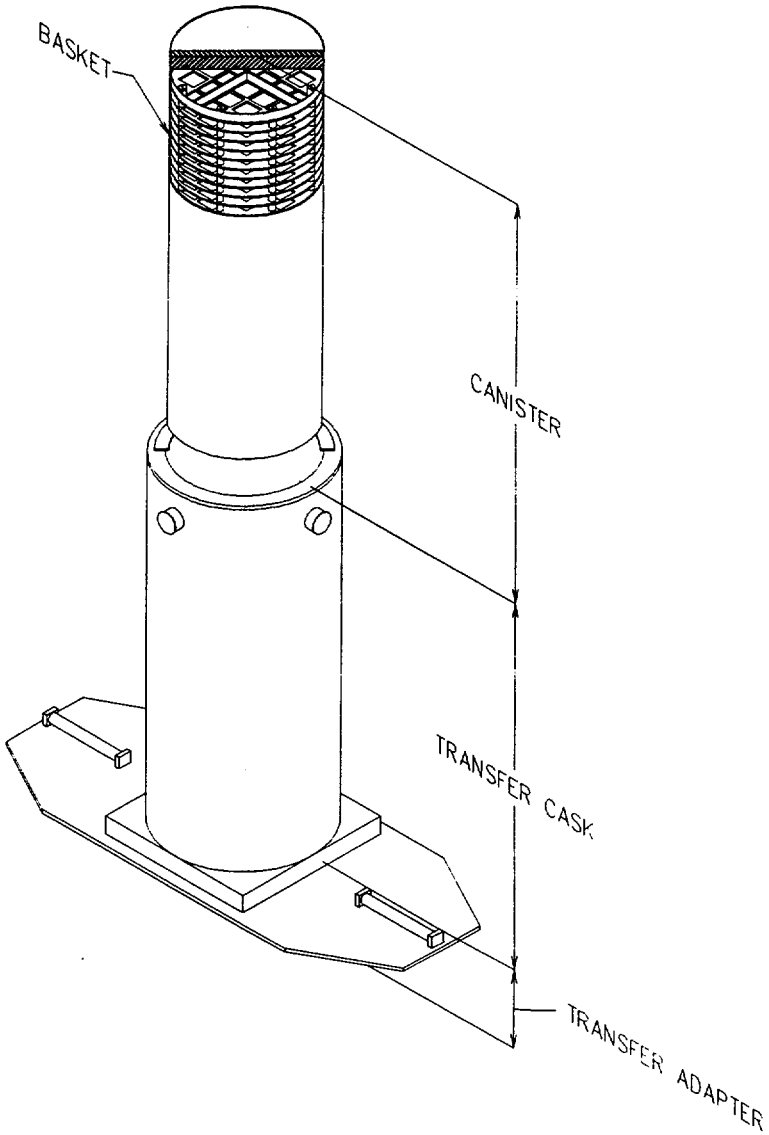

Figure 1.2-5 Vertical Concrete Cask and Transfer Cask Arrangement

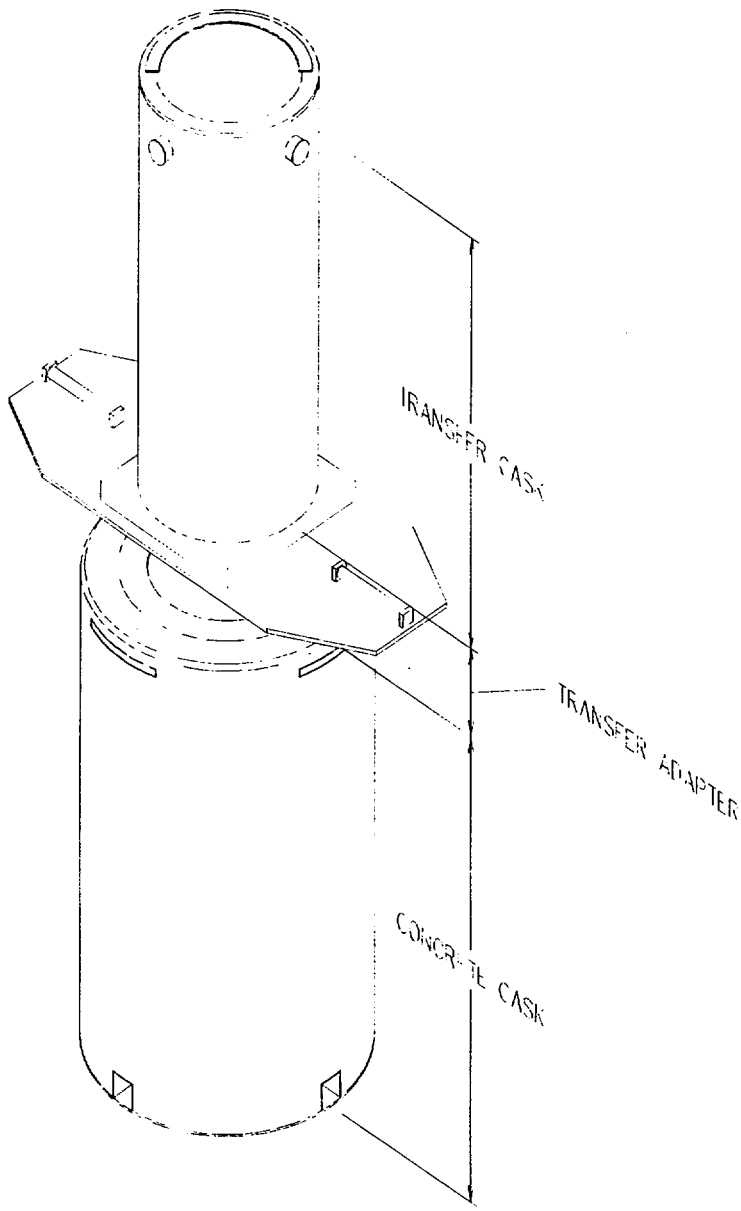

Figure 1.2-6 Major Component Configuration for Loading the Vertical Concrete Cask

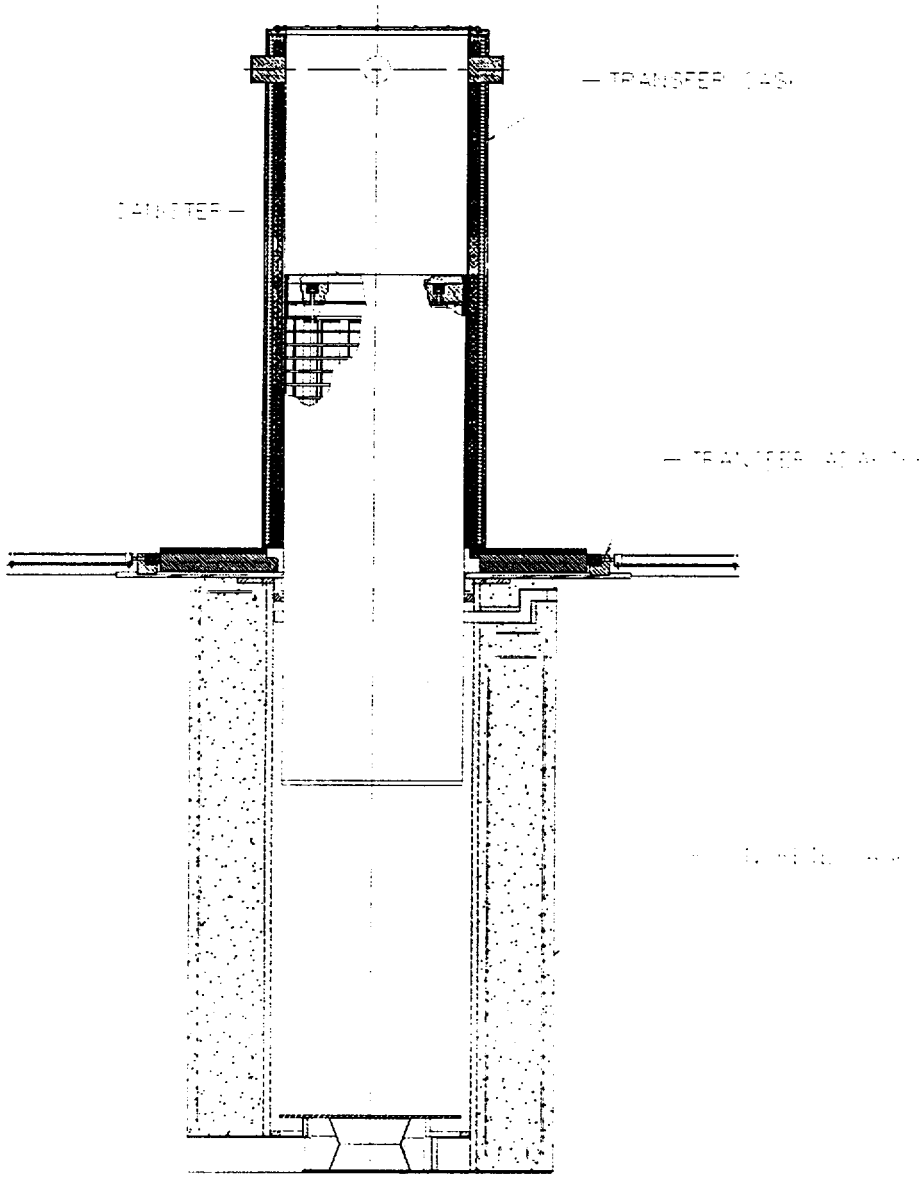

Figure 3.1-1 Principal Components of the Universal Storage System

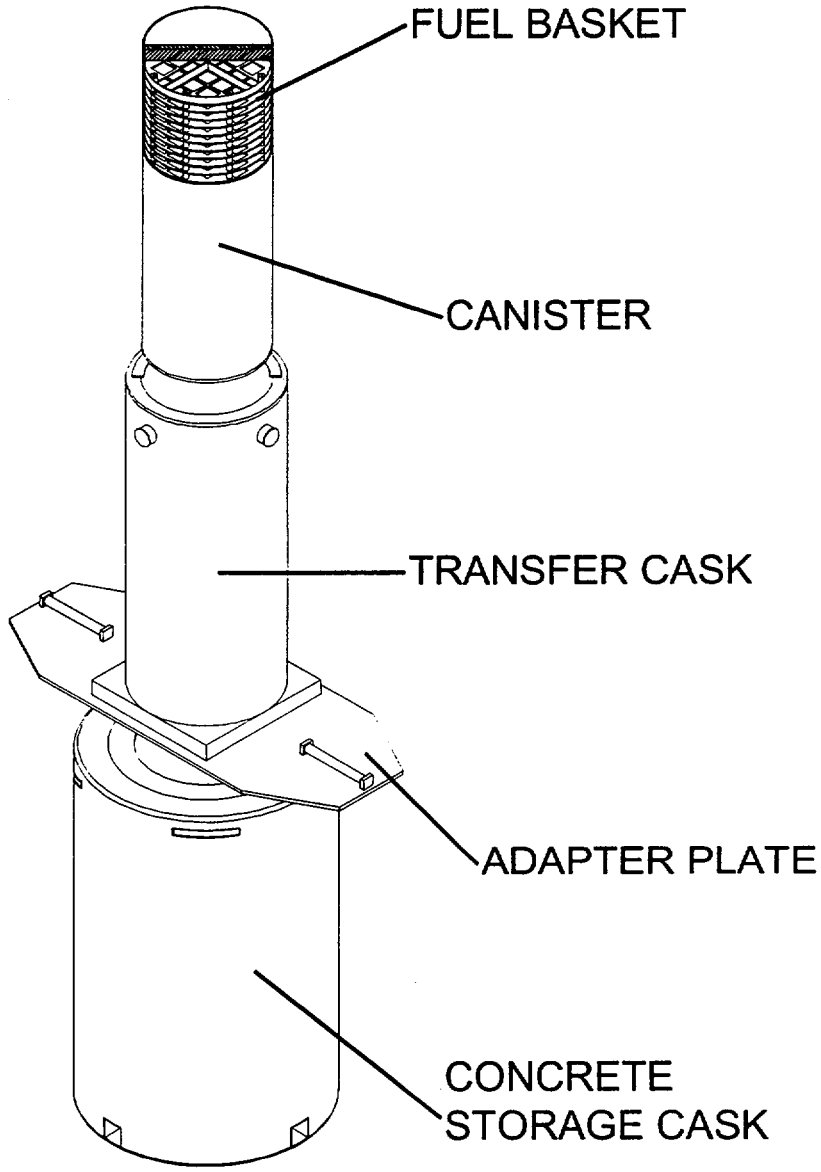

STATE OF MAINE
OFFICE OF THE GOVERNOR
1 STATE HOUSE STATION
AUGUSTA, MAINE
04333-0001

April 4, 2000

ANGUS S. KING, JR.
GOVERNOR

Mr. Richard A. Meserve, Esq.
Chair
U.S. Nuclear Regulatory Commission
Washington, D.C. 20555-0001

Attn: Rulemaking and Adjudications Staff

Dear Chair Meserve:

On behalf of the State of Maine (the "State"), I submit the enclosed comments on the Commission's proposed rule, 65 Fed. Reg. 3397, January 21, 2000, that would amend 10 CFR § 72.214 to approve the NAC-UMS Universal Storage System for spent nuclear fuel (Certificate No. 1015). The State has an acute interest in the Commission's evaluation of this application because Maine Yankee Atomic Power Company intends to use this system for long-term storage of its spent fuel following decommissioning. Based on the United State's commitments in the Nuclear Waste Policy Act, 42 U.S.C. § 10222, et seq., the State expected the Department of Energy ("DOE") to remove all spent fuel from Maine in a timely manner, thus obviating the need for any extensive storage after Maine Yankee's shutdown. Instead, it now appears that DOE may not complete removal of all Maine Yankee's spent fuel for 20 to 30 years, or perhaps much longer. Thus, whatever storage system is chosen must assure the public's safety for an extended period and must ensure that the fuel will be acceptable for removal when the DOE is finally prepared to take it years in the future.

Based on its consultation with leading experts, the State has serious concerns about long-term spent fuel storage. The Commission's proposed Certificate of Compliance (Appendix A at A1-1) and NAC's Preliminary Safety Analysis Report (Table 1-1 at 1-4) permit fuel with pinholes or hairline cracks in the cladding to be treated as if it were "intact," without analyzing the impact of those defects over the 20-year license period much less over the likely storage duration. Emerging research shows that incomplete drying of the spent fuel before storage, combined with demonstrated physical processes, can enlarge those defects and "unzip" the cladding thus breaching a primary containment barrier for the fuel. The absence of any mechanism in the NAC-UMS system to verify the condition of the fuel during storage and prior to transport intensifies the State's concerns.

Because of these concerns, the State of Maine hereby requests that, as a prerequisite to approving the proposed rule, the NRC acquire binding assurances from the DOE that DOE will accept spent fuel for transport and disposal that has been stored in accordance with NRC-approved procedures. Those procedures, in turn, must ensure that stored spent fuel will remain in a condition that DOE can accept. These considerations and the Commission's regulations, 10 CFR § 72.236, preclude approval of the proposed certification until the Commission and the applicant have thoroughly analyzed and resolved critical outstanding issues.

PHONE: (207) 287-3531(Voice)
(207) 287-6548 (TTY)
FAX: (207) 287-1034

The State recognizes that resolution of these issues has industry-wide implications. Most current dry storage systems permit fuel with small defects to be treated as fully intact and those systems may be susceptible to the same long-term cladding failures as the NAC-UMS system. Nevertheless, in light of emerging studies and the anticipated decades-long delay in DOE's removal of spent fuel from reactor sites, the Commission and DOE must act in concert so that Maine does not rely on potentially flawed and inadequate storage systems. Failure to provide concerted answers now based on rigorous, scientific analysis may create additional, more serious problems for future generations. I urge the Commission to take whatever steps are required to provide reliable, incontrovertible evidence that the NAC-UMS system will store spent fuel safely for the reasonably expected storage period and that DOE will accept it for transport and permanent disposal. I look forward to the Commission's response to the State's comments.

Sincerely,

Angus S. King, Jr.
Governor

cc: Bill Richardson
Secretary, Department of Energy

Annette L. Vietti-Cook
Secretary, Nuclear Regulatory Commission

Honorable Olympia J. Snowe
U.S. Senate

Honorable Susan M. Collins
U.S. Senate

Honorable Thomas H. Allen
U.S. House of Representatives

Honorable John E. Baldacci
U.S. House of Representatives

John Tewhey, Esq.
Chair, Maine Board of Environmental Protection

Eric Howes
Maine Yankee Atomic Power Company

STATE OF MAINE COMMENTS ON
NAC-UMS SPENT FUEL STORAGE SYSTEM
April 4, 2000

General Comments

The State of Maine (the "State") offers these comments based on its detailed review of the Preliminary Safety Evaluation Report ("PSER," ML993230106), relevant portions of the Preliminary Safety Analysis Report ("PSAR," ML003683264), and proposed Certificate of Compliance ("CoC," ML993230106) No.1015, including Appendices A and B for the NAC-UMS. The State's comments rely on analysis conducted by Deist Associates, Inc. and by John A. Nevshemal. Dr. Charles Hess and Dr. George Chabot, members of the State's Technical Advisory Panel on nuclear power issues, reviewed the analysis and these comments.

Based on the State's analysis, NAC International has not yet provided reasonable assurance that its NAC-UMS transfer and storage system will maintain the required level of confinement integrity in the proposed dry storage installation under the known, normal conditions. NAC has not provided the required assurance that the single failure-proof confinement requirements for cladding and cask integrity will be unimpaired during the expected storage interval. In particular, NAC has not provided assurance that the integrity of the primary confinement barrier (i.e., the cladding) will be maintained during the licensed period from cask closure until relicensing or shipment. Until NAC provides that assurance, the NAC-UMS spent fuel storage system should not be approved. To the extent that the NRC approves the NAC-UMS application without a further empirical demonstration of such assurance, the NRC should provide a demonstrable scientific basis to justify its approval.

Specific Comments

Comment 1

The CoC defines "Intact Fuel Assembly" and "Intact Fuel Rod" as "a fuel assembly [or rod] without known or suspected cladding defects greater than a pinhole leak or hairline crack." (CoC, App. A at A1-1) Such cladding penetrations indicate cracks in the cladding,

and the pinhole is merely the first point of penetration. Thus, it is inappropriate to rely on the partially breached cladding to provide the necessary confinement barrier during long-term storage. Fuel rods with cladding that has been compromised by pinhole leaks or hairline cracks may "unzip" during dry storage due to the known, expected fuel pellet expansion caused by oxidation. Test data compiled by the Pacific Northwest National Laboratory ("PNNL") suggest that small defects -- perhaps at the location of permissible cladding defects in "intact" fuel -- may open up during dry storage, creating a loss of primary confinement. See "Spent Nuclear Fuel Integrity During Dry Storage – Performance Tests and Demonstrations," Pacific Northwest National Laboratory, June 1997. The PNNL study was based on data covering only seven years of dry storage, and cladding degradation over a 20-year licensed life would be expected to be greater. NAC and the Commission have not analyzed the long-term implications of pinholes and hairline cracks.

Moreover, the PSER does not provide a rationale to explain scientifically why permitted cladding defects in the form of pinholes and hairline cracks do not compromise the cladding as a confinement barrier. Neither the PSER nor the PSAR specify a cause for the pinhole or hairline crack, but necessarily assume that they were created by mechanisms external to the fuel rod (i.e., that there is no ongoing mechanism that would exacerbate the defect over time). It is equally plausible, however, that these defects stem from ***internal*** rod (cladding) stress corrosion cracking. If so, that mechanism may persist through the dry storage period, further compromising the cladding. Neither Interim Staff Guidance - 1, Damaged Fuel, nor the Nuclear Energy Institute's June 30, 1999 fuel classification protocol address the scientific (i.e., physical cause) rationale for classifying fuel with cladding pinholes and hairline cracks as "intact fuel". Without this analysis, the application does not satisfy the requirements of 10 CFR § 72.236(b), (e), and (l), and the Commission may not approve the proposed rule

Comment 2

Neither the PSER nor the PSAR explains how consolidated fuel assemblies that have been canned will maintain confinement in the NAC-UMS system. (See PSAR Section 6.6.1.3.1.) For such assemblies, the primary confinement barrier (i.e., cladding), has been

compromised and has been replaced by a can. The can is not a true confinement barrier, however, because the top and bottom are merely screens that will not confine the powder form of the fuel, U_3O_8. (See PSAR, App. 12A at 12A1-6.) Furthermore, the process of consolidation itself (as defined by ANSI/ANS-57.10, Design Criteria for Consolidation of LWR Spent Fuel) is expected (Design Event II) to produce broken/damaged rods (i.e., cladding penetrations). Therefore, the requirement for a primary confinement barrier will not be met if the can in which the individual rods are loaded has screens. This absence of a primary barrier -- especially when damaged fuel rods are loaded in the can – violates the single failure requirement in 10 CFR § 72.236(e) for confinement of the radioactive material (fuel).

Comment 3

Since the inception of the dry storage concept, designers and regulators have been concerned about oxidation of the radioactive fuel (initially UO_2) due to moisture that remains in the canister after fuel has been loaded from the pool. Because of this concern, extraordinary attention must be given to removal of the pool water from the loaded canister. The proposed NAC-UMS canister drying process (CoC, Table A3-1; SER Section 8.1.3) calls for producing and holding a vacuum of 3 torr (3 mm Mercury) for 30 minutes through two cycles. Upon completion of the drying process the fuel canister is backfilled with an inert gas (helium) and sealed. This proposed drying process will not remove the water completely. Ideal gas law theory alone indicates that this proposed vacuum drying process cannot remove all of the water, even if the fuel rods do not have cladding penetrations (i.e., pinholes and/or hairline cracks). In addition, it is a fact that the water inside those rods with allowed cladding penetrations (i.e., "intact" fuel rods) will not be removed by the vacuum drying process, thus adding to the amount of water available to react with the fuel material (UO_2) during storage.

Water will react with UO_2 based fuel to form bonded hydrated phases (UO_3-H_2O), which cannot be removed by vacuum drying. The oxygen will cause continued oxidation of the fuel, resulting in U_3O_8 phase, which is highly expansionary (i.e., low density). This

phase is able to "unzip" the cladding at already damaged cladding points (stress corrosion cracking) that extend inside the cladding from a pinhole. Because U_3O_8 is essentially a powder, it is highly dispersible. The oxidation reaction is a time-at-temperature process that will proceed based on the temperature of the fuel pellets. Moreover, hydrated phases can increase the oxidation rate of the fuel, typically by a factor of five. For these reasons, it is highly doubtful that the NAC-UMS dry storage system will be able to maintain the necessary condition of the fuel rods over the 20-year license period, and the application does not satisfy the requirements of 10 CFR § 72.236(b), (e), and (l).

Comment 4

The NAC-UMS system does not provide for a capability to verify periodically whether or not the storage conditions have changed, thus requiring canning or other remedial measures for fuel that has developed further damage during storage. Due to the highly dispersible nature of U_3O_8, verification inspection cannot take place in a pool but requires a hot cell with remote handling capabilities. The only available non-destructive verification process would be an assay approach similar to gamma scanning, but gamma scanning is not adequate to determine whether storage conditions have changed. In any case, the NAC-UMS storage system is not amenable to such a scanning technique. Thus, the fuel-containing canisters may need to be opened periodically in a hot cell and visually inspected. An ISFSI site using the NAC-UMS system may require such a facility because the canisters may not be shipped under Part 71 without verification of fuel rod integrity. The PSER inappropriately accepts verification based solely on the lack of external events -- not on the actual condition of cladding -- even though there is an established potential for in-storage cladding degradation. The PSER should define verification requirements for the NAC-UMS system prior to shipment under Part 71 and evaluate the applicant's verification methods. Without such an analysis, the application does not satisfy the requirements of 10 CFR § 72.236(g), (j), and (m).

Comment 5

The NAC-UMS system proposes to use a borated polymer (NS-4-FR) as a neutron slowing/absorbing material for the storage cask (PSER Section 9.1.3). This raises a concern because of problems with radiation hardening experienced with a similar material, Boraflex. See NRC Generic Letter 96-04, "Boraflex Degradation in Spent Fuel Pool Storage Racks," June 26, 1996. There is no evidence -- and the PSER does no analysis -- to establish NS-4-FR's ability to maintain form over the expected lifetime integrated neutron flux. The analysis does not satisfy 10 CFR § 72.236(c), (d), and (g).

Comment 6

The heavy load lifting ability of the transfer and storage systems (described in PSER Section 3.2.3) appears to be inadequately supported. The systems are not redundant, either for attachment or lift capability, and, therefore, do not satisfy the requirements for single failure of the lifting equipment. Similarly, the transfer and storage cask lifting trunnions are not redundant and do not satisfy the requirements for single failure or the requirements of 10 CFR § 72.236(h).

Comment 7

The NAC-UMS system dissipates heat via conduction from the center of the fuel assembly-filled canister to the canister walls and away from the canister through the natural convection via air circulation over the canister's outer surface. The analysis of the expected configuration described in the PSER Section 4.4.1.2 is based on an unrealistic physical model that assumes concentrically centered fuel assemblies. In fact, conduction is radial (not axial) and is based solely on the physical contact of the fuel assembly with the basket holding the assemblies. Because the NAC-UMS system is a vertical storage system, there is a potential for non-uniform physical contact between the basket and the fuel assembly (i.e., the heat source). For this reason, hot spots may develop along the axial direction of the fuel rod. The PSER does not analyze the degradation effects of these hot spots to assure cladding integrity throughout the license storage period. Thus, the application does not satisfy the requirements of 10 CFR § 72.236(b), (e), (f), and (l).

Comment 8

The operator testing and training exercises described in CoC Section A5.0 do not require training in the importance of sequence. The CoC implies that training will be conducted solely on an activity basis. Thus, the planned training loses the importance of the various interface requirements between activities that follow each other. This omission permits operator mistakes at activity intersections and may contribute to missing parameter values or conditions that must be met for safe loading and transfer of the assembly canister from the spent fuel pool to the storage cask. Individual procedures should include stated pre-conditions that must be satisfied by the previous sequential procedure and are necessary for safely performing the subsequent activity. Without such procedures, the application does not satisfy the requirements of 10 CFR § 72.236(l).

Comment 9

The radiological dose to adjacent controlled or non-controlled site areas is based on 20 loaded vertical storage modules (PSER Sections 10.3 and 10.4). The prototypical modules are arranged in two rows with ten storage modules per row. This assumption is unrealistic in ISFSIs that support the complete decommissioning of an operating nuclear power plant, where there may be 50 or more modules. The more storage modules, the greater the sky shine interaction that is available at the boundary of the site control area and the greater the on-site occupational dose. The PSER does not analyze the more typical module configurations and, thus, does not meet the requirements of 10 CFR § 72.236(d).

Comment 10

The PSER structural analysis (Sections 3.1 and 3.4) discusses three types of tornado generated missiles, two of which are of different mass (i.e., a "deformable missile of 3980 lbs." and a "penetration missile of 275 lbs."). There is no analysis, however, of an event similar to a tornado generated missile -- a terrorist attack in the form of a fired missile. Foreign regulatory agencies are now requiring such an analysis. The need for the analysis is further driven by a common location of the ISFSI (e.g., near international waters). The recent introduction of high penetrating depleted uranium missile shells adds to the concern

of a terrorist event at an ISFSI. An analysis of the vulnerability of an ISFSI to such an attack may identify the need for sturdier storage module surfaces, an expanded site security area, or a storage enclosure (including appropriately designed heat removal systems). Without such an analysis, the application does not satisfy the requirements of 10 CFR § 72.236(l).

Comment 11

The criticality analyses as discussed in PSER Section 6.4 does not provide a listing of the fissile material in the spent fuel assemblies, without which the analysis is questionable and does not satisfy the requirements of 10 CFR § 72.236(c). Of particular concern is the concentration of Pu-239 which continues to undergo spontaneous fission and, therefore, increased neutron flux.

Comment 12

The process of placing the spent fuel in the canister is not adequately justified, as required by 10 CFR § 72.236(l). The spent fuel handling equipment removes the fuel assembly from either the transfer basket or the spent fuel storage rack. The assembly is raised until the bottom is above the rack, and then horizontally translated to the canister at which point the assembly is vertically lowered into the canister basket. The entire procedure is manual. The industry consensus standard, ANSI/ANS-57.1, Design Requirements for Light Water Reactor Fuel Handling Systems, requires a Translation Inhibit, i.e., "[a]n interlock to prevent bridge or trolley movement unless its associated hoist is at or above a predetermined operational up-position." The "up-position" is defined as being above the aforementioned restricted areas. The basic reason is to assure that horizontal motion translation does not occur when a fuel assembly is partially inserted into the canister basket, which could cause major damage to the fuel assembly and, thereby, disperse highly radioactive fuel pellets. While the standard permits an allowed bypass for this interlock, the bypass is limited to a jogging function that confines travel to increments of 1/16 of an inch. The NAC-UMS procedures do not make it clear that installed bypasses must be step-by-step, as required by the standard, not continuous motion. The handling

equipment of a plant applying for approval to load dry storage canisters should be checked for continuous translation bypass in sensitive areas in order to eliminate the potential for a major radioactive dispersing accident.

Comment 13

The PSER does not address the impact of the NAC-UMS cask storage system on stormwater quality.

Comment 14

The PSER does not address the necessary financial capability of a license holder to operate and maintain the NAC-UMS cask storage system over the 20-year license period.

Comment 15

The PSER does not address the necessary technical capability of the license holder to operate and maintain the NAC-UMS cask storage system

UNITED STATES
NUCLEAR REGULATORY COMMISSION
WASHINGTON, D.C. 20555-0001

September 20, 1999

Mr. Thomas C. Thompson, Director
Licensing & Competitive Assessment
NAC International, Inc.
655 Engineering Drive
Norcross, GA 30092

SUBJECT: EXEMPTION FROM 10 CFR 72.234(c) FOR THE NAC-UMS UNIVERSAL STORAGE SYSTEM, DOCKET 72-1015 (TAC NO. L22950)

Dear Mr. Thompson:

By letter dated July 19, 1999, and pursuant to the provisions of 10 CFR Part 72.7, NAC International, Inc., (NAC) requested an exemption from 10 CFR 72.234(c). NAC requested permission to begin procurement and fabrication activities for 36 UMS transportable storage canisters (TSCs), 36 UMS vertical concrete casks (VCCs), and 1 UMS transfer cask prior to receipt of the Certificate of Compliance (CoC). The TSCs, VCCs, and transfer cask are basic components of the UMS Universal Storage System. The application for a UMS storage CoC was submitted by NAC to the Nuclear Regulatory Commission (NRC) on August 29, 1997, as supplemented.

NAC is a subcontractor to Maine Yankee Atomic Power Company (MYAPC) for supplying a total of 66 UMS systems for the Maine Yankee Atomic Power Station (Maine Yankee), located in Wiscasset, Maine. The Maine Yankee decommissioning schedule is based on initiating spent fuel loading operations in April 2001 using the UMS system. MYAPC plans to continue loading the UMS systems until all the spent fuel is in dry storage. The current MYAPS loading plan specifies 24 UMS systems to be loaded by October 2001. NAC also requested an exemption to fabricate a 90-day supply of additional UMS systems to support the Maine Yankee decommissioning plan. Specifically, NAC stated that, in addition to the fabrication exemption for the 24-required UMS systems, a fabrication exemption is also needed for an additional 12 TSCs and VCCs to ensure a continuous Maine Yankee loading campaign. Consequently, NAC requested a fabrication exemption for a total of 36 TSCs and VCCs.

To support training and dry run operations, NAC indicated that the first of the UMS TSCs, VCCs, and transfer cask is required by October 2000. To meet this decommissioning schedule, NAC stated that procurement of the TSCs, VCCs, and transfer cask materials must begin by September 1999.

NAC has established a Quality Assurance (QA) Program that includes specific QA requirements for procurement and fabrication of items and activities important to safety. The UMS casks fabricated for use at Maine Yankee will not be loaded with spent fuel until the CoC is issued.

NRC staff evaluated the public health and safety and environmental impacts of the proposed exemption and determined that granting the exemption would not result in any significant impacts. For this action, an Environmental Assessment and Finding of No Significant Impact

1/0

NF07

9909230122 990920
PDR ADOCK 05000309
V PDR

have been prepared and published in the Federal Register (64 FR 48437, September 3, 1999). An advance copy of the Federal Register Notice was provided to you by letter dated August 20, 1999.

NRC approval of the exemption request shall not be construed as an NRC commitment to favorably consider NAC's application for a CoC. NAC shall bear the risk of all activities conducted under this exemption.

Based on the foregoing considerations, the staff determined that granting the proposed exemption from the requirements of 10 CFR 72.234(c) to permit fabrication of 36 UMS TSCs, 36 VCCs, and 1 transfer cask is authorized by law, will not endanger life or property or the common defense and security, and is otherwise in the public interest. NAC is hereby granted an exemption, subject to the following conditions:

1) NAC shall apply its QA Program for procurement and fabrication of the 36 TSCs, 36 VCCs, and 1 transfer cask addressed by this exemption in compliance with the requirements of 10 CFR Part 72, Subpart G.

2) NAC shall make provisions for NRC to inspect the premises and facilities at which the UMS components will be fabricated and tested in accordance with 10 CFR Part 72. This condition shall be completed prior to any fabrication activities under this exemption.

3) NAC shall notify NRC at least 45 days prior to fabrication of the first TSC, VCC, and transfer cask.

4) NAC shall make provisions for NRC to perform any tests that it deems necessary or appropriate for assessing compliance with the requirements of 10 CFR Part 72.

5) NAC shall bear the risk of any activities conducted under this exemption; including the risk that the TSCs, VCCs, or transfer cask may require modification or that the components may not be useable as a result of not meeting specifications or conditions delineated in a UMS CoC that the NRC may ultimately issue.

Please refer to Docket 72-1015 and TAC No. L22950 in future correspondence related to this action.

Sincerely,

ORIGINAL SIGNED BY M. WAYNE HODGES FOR /s/

E. William Brach, Director
Spent Fuel Project Office
Office of Nuclear Material Safety
and Safeguards

Dockets 72-1015, 72-30, 50-309

cc: Mr. Michael Meisner
Maine Yankee Atomic Power Company

DISTRIBUTION: (closes TAC No. L22950/Control No. 020S)

Dockets	NRC File Center	PUBLIC	NMSS r/f	SFPO r/f
TMcGinty	MWebb, NRR	CLyon, NRR	JYerokun, R-I	WHodges
ANorris				

G:\NAC\UMS\Exemption\exempt-ltr.wpd

*see previous concurrence

OFC:	*SFPO		*SFPO	E	*OGC	E	*SFPO	E	DD:SFPO	E	D:SFPO	E
NAME:	SO'Connor:jh		VLTharpe		NJensen		RChappell		SShankman		EWBrach	
DATE:	9/7/99		9/7/99		9/10/99		9/10/99				9/20/99	

OFFICIAL RECORD COPY

have been prepared and published in the Federal Register (64 FR 48437, September 3, 1999). A copy of the Federal Register Notice was provided to you by letter dated August 20, 1999.

NRC approval of the exemption request shall not be construed as an NRC commitment to favorably consider NAC's application for a CoC. NAC shall bear the risk of all activities conducted under this exemption.

Based on the foregoing considerations, the staff determined that granting the proposed exemption from the requirements of 10 CFR 72.234(c) to permit fabrication of 36 UMS TSCs, 36 VCCs, and 1 transfer cask is authorized by law, will not endanger life or property or the common defense and security, and is otherwise in the public interest. NAC is hereby granted an exemption, subject to the following conditions:

1) NAC shall apply its QA Program for procurement and fabrication of the 36 TSCs, 36 VCCs, and 1 transfer cask addressed by this exemption in compliance with the requirements of 10 CFR Part 72, Subpart G.

2) NAC shall make provisions for NRC to inspect the premises and facilities at which the UMS components will be fabricated and tested in accordance with 10 CFR Part 72. This condition shall be completed prior to any fabrication activities under this exemption.

3) NAC shall notify NRC at least 45 days prior to fabrication of the first TSC, VCC, and transfer cask.

4) NAC shall make provisions for NRC to perform any tests that it deems necessary or appropriate for assessing compliance with the requirements of 10 CFR Part 72.

5) NAC shall bear the risk of any activities conducted under this exemption; including the risk that the TSCs, VCCs, or transfer cask may require modification or that the components may not be useable as a result of not meeting specifications or conditions delineated in a UMS CoC that the NRC may ultimately issue.

Please refer to Docket 72-1015 and TAC No. L22950 in future correspondence related to this action.

Sincerely,

E. William Brach, Director
Spent Fuel Project Office
Office of Nuclear Material Safety
and Safeguards

Dockets 72-1015, 72-30, 50-309

cc: Mr. Michael Meisner
Maine Yankee Atomic Power Company

Distribution: (closes TAC No. L22950/Control No. 020S)

Dockets	NRC File Center	PUBLIC	NMSS r/f	SFPO r/f
TMcGinty	MWebb, NRR	CLyon, NRR	JYerokun, R-I	WHodges
ANorris				

G:\NAC\UMS\Exemption\exempt-ltr.wpd

OFC	SFPO	C	SFPO	C	OGC	C	SFPO	C	SFPO	C	SFPO	C
NAME	SO'Connor		VTrame		NJensen		CRO		SShankman		EWBrach	
DATE	9/7/99		9/7/99		9/10/99		9/10/99					

C = Cover E = Cover & Enclosure N = No Copy

OFFICIAL RECORD COPY

IN THE
UNITED STATES COURT OF APPEALS
FOR THE DISTRICT OF COLUMBIA

State of Maine, Petitioner,	)	
v.	)	No. _____
Nuclear Regulatory Commission, Respondent.	)	

DECLARATION OF
GEORGE CHABOT:

I, Dr. George Chabot of North Reading, MA, state as follows:

1. I am engaged by the State of Maine (the "State") as a consultant nuclear physicist. As part of my duties, I must stay informed about the plans for and progress of decommissioning activities at the Maine Yankee Atomic Power Plant ("Maine Yankee") located in Wiscasset, Maine. Among other things, I meet as required with personnel from Maine Yankee and State agencies to discuss Maine Yankee decommissioning. I also participate as a member of the Governor's Technical Advisory Panel and review copies of correspondence and reports from Maine Yankee, as well as from State and federal agencies, related to Maine Yankee decommissioning, as requested by the State's Nuclear Safety Advisor.

2. In particular, my duties require me to be informed about Maine Yankee's plans for spent nuclear fuel storage and the U.S. Department of Energy's plans and prospects for disposal of spent nuclear fuel. Among other Things and as required, I meet with and review reports from Maine Yankee and State agencies related to spent nuclear fuel storage and transportation, particularly from a radiological health and safety perspective.

3. Maine Yankee plans to use a storage/transport system that is being designed and supplied by NAC International, Inc. called NAC-UMS. In this proposed system, spent fuel will be placed in sealed metal canisters that can be used for both storage and transport. The canisters are placed in reinforced concrete casks for storage but can be removed from the storage casks into shielded transfer casks and placed directly in shielded transport casks without ever unsealing the canisters or exposing the fuel. This is one of the major benefits of the dual-purpose storage and transport system because it minimizes exposure of workers and others to hazardous radiation.

4. If the canister has to be unsealed and inspected before it can be transported, this substantial health and safety benefit will be lost. If the canister must be opened while still at the Maine Yankee site, the storage/transport canister will have to be placed in a "hot cell" that is specially designed to handle exposed spent nuclear fuel. To the extent that the spent fuel (or the metal cladding that covers the fuel pellets in each fuel rod) has deteriorated, the particles of highly radioactive fuel materials will have to be carefully contained within the hot cell and transferred to a new transport canister. This process presents a radiation hazard to Maine citizens (including Maine Yankee employees, State and federal inspectors, and possibly others) that can be avoided if the canister remains sealed once the contents are loaded..

I declare under penalty of perjury of the laws of the United States of America that the foregoing is true and correct.

Date: November 8, 2000

Dr. George Chabot

George Chabot

Notary
Gail A. Lester 11-8-00
(My Commission expires
3-24-00

IN THE
UNITED STATES COURT OF APPEALS
FOR THE DISTRICT OF COLUMBIA

State of Maine, Petitioner,	)	
v.	)	No. _____
Nuclear Regulatory Commission, Respondent.	)	

DECLARATION OF
PAULA CRAIGHEAD

I, Paula Craighead, state as follows:

1. I am employed by the State of Maine (the "State") as the State Nuclear Advisor. As part of my duties, I must stay informed about the plans for and progress of decommissioning activities at the Maine Yankee Atomic Power Plant ("Maine Yankee") located in Wiscasset, Maine. Among other things, I meet with personnel from Maine Yankee and State and federal agencies to discuss Maine Yankee decommissioning. I also review the reports of the Governor's Technical Advisory Panel and review copies of correspondence and reports from Maine Yankee, as well as from State and federal agencies, related to Maine Yankee decommissioning.

2. In particular, my duties as State Nuclear Advisor require me to be informed about Maine Yankee's plans for spent nuclear fuel storage and the U.S. Department of Energy's plans and prospects for disposal of spent nuclear fuel. Among other things, I meet with and review reports from Maine Yankee, Maine Yankee's spent fuel storage system vendor (NAC International, Inc.), the NRC, and other State or federal agencies related to spent nuclear fuel storage, transportation, costs, and disposal.

3. Maine Yankee plans to use a storage/transport system that is being designed and supplied by NAC International, Inc. called NAC-UMS. In this proposed system, spent fuel will be placed in sealed metal canisters that can be used for both storage and transport. The canisters are placed in reinforced concrete casks for storage but can be removed from the storage casks into shielded transfer casks and placed directly in shielded transport casks without ever unsealing the

canisters or exposing the fuel. This is one of the major benefits of the dual-purpose storage and transport system because it minimizes exposure of workers and others to hazardous radiation.

4. Maine Yankee currently plans to begin loading its spent nuclear fuel into the NAC-UMS casks in April 2001. (It has indicated that it may begin to load other highly radioactive waste known as "Greater-than-Class-C waste" or "GTCC waste" in NAC-UMS canisters as soon as December 2000.) Maine Yankee expects to load spent fuel into about 60 canisters that will be placed in an equal number of storage casks at an Independent Spent Fuel Storage Installation ("ISFSI") located at Maine Yankee's Wiscasset, Maine site.

I declare under penalty of perjury of the laws of the United States of America that the foregoing is true and correct.

Paula Craighead

Paula Craighead

Date: November 8, 2000

IN THE
UNITED STATES COURT OF APPEALS
FOR THE DISTRICT OF COLUMBIA

State of Maine, Petitioner,	)	
v.	)	No. _____
Nuclear Regulatory Commission, Respondent.	)	

DECLARATION OF
JAMES A. BUCKLEY, Esq.
State of Maine

I, James A. Buckley, state as follows:

1. I am employed by the State of Maine (the "State") as special counsel with the Maine Public Utilities Commission. As part of my duties, I must stay informed about the plans for and progress of decommissioning activities at the Maine Yankee Atomic Power Plant ("Maine Yankee") located in Wiscasset, Maine. Among other things, I meet regularly with State and federal agencies to discuss Maine Yankee decommissioning. I review copies of correspondence and reports from Maine Yankee, as well as from State and federal agencies, related to Maine Yankee decommissioning.

2. In particular, my duties as a special counsel require me to be informed about Maine Yankee's plans for spent nuclear fuel storage and the U.S. Department of Energy's (DOE) plans and prospects for disposal of spent nuclear fuel. Among other things, I meet with and review financial and audited reports from Maine Yankee related to, *inter alia*, spent nuclear fuel storage, transportation and disposal costs.

3. In January 1998, Maine Yankee entered into a settlement agreement with, among others, the Maine Public Utilities Commission and the Maine Public Advocate to resolve a rate proceeding before the Federal Energy Regulatory Commission ("FERC"). I am one of the attorneys who negotiated the settlement agreement on behalf of the Maine Public Utilities Commission.

4. As part of that settlement. Maine Yankee agreed to use its best efforts to recover from DOE those spent fuel storage costs that are incurred because DOE breached its contract to begin removing spent fuel beginning in January 1998. If Maine Yankee is unable to recover all of those costs, however, it is entitled to recover any reasonable costs of spent fuel storage not recovered from DOE as part of its prudent decommissioning costs.

5. As an attorney with oversight in the FERC proceeding concerning Maine Yankee, I attest that the utility is eligible under the FERC settlement to recover any prudent costs necessitated by a delay in approval of the dry cask storage system.

I declare under penalty of perjury of the laws of the United States of America that the foregoing is true and correct.

James A. Buckley, Esq.

November 8, 2000

KAYE, SCHOLER, FIERMAN, HAYS & HANDLER, LLP
A NEW YORK LIMITED LIABILITY PARTNERSHIP
THE McPHERSON BUILDING
901 FIFTEENTH STREET, N.W., SUITE 1100
WASHINGTON, D.C. 20005-2327

NEW YORK
LOS ANGELES
WEST PALM BEACH
HONG KONG
SHANGHAI

(202) 682-3500
FAX (202) 682-3580
RSpeck@kayescholer.com

November 1, 2000

BY HAND AND TELECOPIER

David L. Meyer
Chief, Rules and Directives Branch
Office of Administration
U.S. Nuclear Regulatory Commission
One White Flint North
Rockville, MD

Re: Request to Stay the Effectiveness of Amendment to 10 CFR § 72.214

Dear Mr. Meyer:

On behalf of my client, the State of Maine (the "State"), I request that the Nuclear Regulatory Commission ("NRC") stay the effective date of its amendment to 10 CFR § 72.214 adding the NAC Universal Storage System ("NAC-UMS") to the list of approved spent fuel storage casks. See 65 Fed. Reg. 62581 (October 19, 2000). The rule is currently set to become effective on November 20, 2000. The State is considering whether to seek review of this NRC rulemaking, but Maine Yankee intends to begin loading its spent fuel into the NAC-UMS casks relatively soon. In order to obtain a timely review of the Commission's rule, the State asks that its effectiveness be stayed until December 19, 2000 (the date by which a review petition will have to be filed) or until all appellate review is complete, whichever is later.

The State made a number of comments on the proposed rule, including a request "that, as a prerequisite to approving the proposed rule, the NRC acquire binding assurances from the DOE that DOE will accept spent fuel for transport and disposal that has been stored in accordance with NRC-approved procedures." The State is concerned that unless DOE agrees now that the NAC-UMS canisters will preserve the spent fuel intact and in an acceptable condition for transport and disposal for the decades of storage that will be necessary before DOE finally removes it, the canisters may have to be unsealed and inspected before any fuel can move. Not only would this procedure be costly and time consuming, but it may expose workers and State employees to unnecessary radiation dose.

The NRC did not even request DOE review of the NAC-UMS system design -- much less a commitment from DOE to accept fuel stored in that system -- "[b]ecause the DOE's spent fuel acceptance criteria for ultimate disposal has [sic] not yet been formalized [and, therefore,] it would not be practical to preclude a storage approval on this basis at this time." This response did not address the State's comment. The existence of acceptance criteria for ultimate disposal is irrelevant to whether DOE can determine if it will accept stored spent fuel for ***transport*** without first opening and inspecting the fuel. The NAC-UMS system does not purport to provide a canister that could be used for ultimate disposal. Rather, that system assumes that the spent fuel assemblies will have to be removed from their transport canisters in a specially designed facility at the permanent disposal site. The basic premise of the NAC-UMS system, however, is that there will be no need to expose workers and the environment to the highly radioactive spent fuel at the time when DOE arrives at the reactor site to begin accepting the spent fuel. The storage canister is the same as the transport canister, and it can simply be transferred from the storage cask to the transport cask without exposing workers to avoidable risks.

By failing to take the reasonable step of soliciting DOE design review and approval, the NRC rule jeopardizes the fundamental safety and efficiency principle that underlies the NAC-UMS concept. Before accepting spent fuel for transport, DOE will be free to second-guess the NRC's determinations and demand that storage/transport canisters be opened and inspected to determine whether there has been any deterioration in the fuel's condition over the decades of storage. Indeed, DOE warned in its letter to Governor King (cited in the NRC's response) that it may delay accepting spent fuel if there are questions about its condition that require DOE "to address any technical issues that may be related to the fuel's safe handling and disposal." The longer that DOE delays in fulfilling its obligation to remove spent fuel, the more likely DOE will be to demand additional investigations. It is unreasonable for the NRC to refuse to involve DOE at this stage when DOE's design input now could avoid serious health and safety consequences in the future.

A stay of the effectiveness of the rule will permit a thorough review of this health and safety issue and is, therefore, in the public interest. The relatively small potential economic consequences of a delay in loading Maine Yankee's spent nuclear fuel cannot outweigh the potential health and safety consequences of the failure to obtain DOE's commitment to accept fuel "as is" in NAC-UMS canisters.

Unless the NRC grants a stay by November 10, 2000, the State will have no choice but to petition the Court of Appeals to review the rule and to stay its effectiveness pending completion of that review. Please advise me as soon as possible but no later than November 10, 2000, whether the NRC will grant the State's request for a stay.

Sincerely,

Randall Speck

cc: Michael Misner
Maine Yankee

UNITED STATES
NUCLEAR REGULATORY COMMISSION
WASHINGTON, D.C. 20555-0001

November 9, 2000

Mr. Randall Speck
Kaye, Scholer, Fierman, Hays & Handler, LLP
The McPherson building
901 Fifteenth Street, N.W., Suite 1100
Washington, D.C. 20005-2327

SUBJECT: REQUEST TO STAY THE EFFECTIVENESS OF AMENDMENT TO 10 CFR § 72.214

Dear Mr. Speck:

This is in response to your letter of November 1, 2000, requesting, on behalf of the State of Maine (the State), that the Nuclear Regulatory Commission (NRC) stay the effective date of its amendment to 10 CFR § 72.214 adding the NAC Universal Storage System (NAC-UMS) cask system to the list of approved spent fuel storage casks (65 FR 62581 (October 19, 2000)). The State makes this request "[i]n order to obtain a timely review of the Commission's rule" preparatory to deciding whether to file a petition for judicial review. In particular, you are concerned that the NRC did not agree to the State's request, made in its April 4, 2000 comment letter on the proposed rule, that "the NRC acquire binding assurances from the [Department of Energy] that DOE will accept spent fuel for transport and disposal that has been stored in accordance with NRC-approved procedures."

We believe that NRC's response addressed the State's comment by citing DOE's response to the comment letter. See 65 FR 62595. In DOE's response, Dr. Ivan Itkin, Director of DOE's Office of Civilian Radioactive Waste Management, confirmed, in a letter dated May 3, 2000, to the Governor of Maine, that DOE's contract for disposal with Maine Yankee "covers the **acceptance, transport,** and disposal of **all** spent nuclear fuel from the Maine Yankee reactor, **regardless of the condition of the spent nuclear fuel**" (emphasis added). Dr. Itkin further assured the State that DOE has "every intention of fulfilling our contractual obligations with Maine Yankee and our other utility customers." Id.

Your letter expresses the State's additional concern that unless DOE agrees now that the NAC-UMS canisters will preserve the spent fuel intact and in an acceptable condition for transport and disposal for the decades of storage that may be necessary before DOE finally removes it, the canisters may have to be unsealed and inspected before any fuel can move. Because Dr. Itkin's letter of May 3, 2000 provides assurance that DOE will accept the spent fuel for transport and disposal, regardless of its condition, opening the canisters for inspection may not be necessary prior to DOE's ultimate acceptance of the spent fuel. Dr. Itkin's letter does indicate that DOE's scheduling of transport and acceptance may be affected by the condition of the fuel. If inspection of the spent fuel is required for any unanticipated reason, opening of the canisters will be conducted in accordance with established procedures that reasonably assure the safety of all persons involved in the operation. As we said in reply to the State's comments on the proposed rule, the NRC staff has reasonable assurance that the spent fuel is adequately protected against degradation that might otherwise lead to gross rupture during storage. The NRC requirements for the design of the NAC-UMS cask system are such that periodic verification of cladding conditions during storage and prior to transportation, i.e., unsealing and inspection of the cask system, is not warranted.

We note that the Maine Yankee schedule does not call for the loading of spent fuel into the NAC-UMS casks until April 2001, at the earliest. Therefore, no harm will befall the State if the rule placing the NAC-UMS cask on the approved list is allowed to take effect on the scheduled date of November 20, 2000. For that reason and because the safety issues raised with respect to this cask design were addressed in the final rule, we decline to stay the effective date of the rule. Nevertheless, in recognition of the State's concerns, if the State believes a meeting will be helpful, we will initiative planning for such a meeting. Please feel free to call me at 301-415-7800.

Sincerely,

William F. Kane, Director
Office of Nuclear Material Safety
and Safeguards

cc: Michael Meisner, Maine Yankee
Lake Barrett, DOE

Department of Energy
Washington, DC 20585

May 3, 2000

The Honorable Angus S. King, Jr.
Governor of Maine
1 State House Station
Augusta, Maine 04333-0001

Dear ~~Governor King~~ Angus:

Secretary Richardson has received your letter of April 4, 2000 to Nuclear Regulatory Commission Chairman Meserve and has requested that I respond on behalf of the Department of Energy. Your letter provided Chairman Meserve with comments on behalf of the State of Maine on the Commission's proposed rule, 65 Fed. Reg. 3397, which amends 10 CFR Part 72.214 to approve the NAC-UMS Universal Storage System for spent nuclear fuel.

The Department of Energy shares your view that the spent fuel at Maine Yankee must be stored in a manner that ensures the protection of the public health and safety. The Nuclear Regulatory Commission has the responsibility to ensure that storage casks are designed, fabricated and operated in a manner that ensures this objective is met. I am sure that Chairman Meserve will address adequately the technical concerns raised in your letter.

Your letter also requests that the Commission, as a pre-requisite to approval of the proposed rule, acquire binding assurances from the Department of Energy that the Department will accept spent fuel for transport and disposal that has been stored in accordance with NRC approved procedures. It is my belief that there is no need for the Commission to obtain such assurances from the Department, as they already exist under the terms of the contract for disposal that the Department has with Maine Yankee Atomic Power Company. The contract covers the acceptance, transport, and disposal of all spent nuclear fuel from the Maine Yankee reactor, regardless of the condition of the spent nuclear fuel. However, while the condition of the fuel does not impact the Department's ultimate responsibility for disposal under the contract, it may require an adjustment in our schedule to allow us to address any technical issues that may be related to the fuel's safe handling and disposal. The Department will meet all applicable Commission requirements for the safe transportation and disposal of spent nuclear fuel.

I assure you that while we may be currently delayed in our ability to begin disposal of the Nation's commercial spent nuclear fuel, we have every intention of fulfilling our contractual obligations to Maine Yankee and our other utility customers. If you have any further questions or concerns, please feel free to contact me at (202) 586-6842.

Sincerely,

Ivan Itkin

Ivan Itkin, Director
Office of Civilian Radioactive
Waste Management

cc: Bill Kane, Nuclear Regulatory Commission