January 9, 2001

Dr. Steven S. Koblik, President
Reed College
3203 SE Woodstock Boulevard
Portland, OR 97202

SUBJECT: INITIAL EXAMINATION REPORT NO. 50-288/OL-01-01

Dear Dr. Koblik:

During the week of December 4, 2000, the NRC administered initial examinations to employees of your facility who had applied for a license to operate your Reed College Reactor. The examination was conducted in accordance with NUREG-1478, "Non-Power Reactor Operator Licensing Examiner Standards," Revision 1. At the conclusion of the examination, the examination questions and preliminary findings were discussed with those members of your staff identified in the enclosed report.

In accordance with 10 CFR 2.790 of the Commission's regulations, a copy of this letter and the enclosures will be available electronically for public inspection in the NRC Public Document Room or from the Publicly Available Records (PARS) component of NRC's document system (ADAMS). ADAMS is accessible from the NRC Web site at (the Public Electronic Reading Room) http://www.nrc.gov/NRC/ADAMS/index.html. The NRC is forwarding the individual grades to you in a separate letter which will not be released publicly. Should you have any questions concerning this examination, please contact Paul Doyle by phone at 301-415-1058 or by Internet E-mail at pvd@nrc.gov.

Sincerely,

/RA/

Ledyard B. Marsh, Chief
Events Assessment, Generic Communications
and Non-Power Reactors Branch
Division of Regulatory Improvement Programs
Office of Nuclear Reactor Regulation

Docket No. 50-288

Enclosures:
1. Initial Examination Report No. 50-288/OL-01-01
2. Examination and answer key (RO/SRO)

cc w/encls:
Please see next page

cc:

Mayor of City of Portland
1220 Southwest 5th Avenue
Portland, OR 97204

Reed College
ATTN: Dr. Peter Steinberger
Dean of the Faculty
3203 S.E. Woodstock Boulevard
Portland, OR 97202-8199

Oregon Department of Energy
ATTN: David Stewart-Smith, Director
Division of Radiation Control
625 Marion Street, N.E.
Salem, OR 97310

Test, Research, and Training
Reactor Newsletter
University of Florida
202 Nuclear Sciences Center
Gainesville, FL 32611

Facility Site (Reactor Site) Docket No. 50-288 by [illegible]

2. Examination of Licensee Exam (RO/SRO) No. 50-288/Dir-01-01 Report

REXB r/f MMendonca

January 9, 2001

Office of Nuclear Reactor Regulation Programs

CBassett, RII PDoyle

DMatthews

DATE	NAME	ADAMS ACCESSION #: ML003779127
12/ 26 /00	PDoyle:dr	REXB:CE
		E
01/ 05/ 01	EBaOtBl	
		E
01/ 08 /01	LMarshpTrappert	REXB:BC/DBC

TEMPLATE #:NRR-074

C = COVER

E = COVER & ENCLOSURE

N = NO COPY

OFFICIAL RECORD COPY

3. 2. 1. [illegible]

[illegible] minor

Paul V. Doyle Jr., Chief Examiner

OPERATOR LICEN

U. S. NUCLEAR

Paul Doyle, Chief Examiner

Paul Doyle, Chief Examiner

Date

2/0	2/0	2/0	RO PASS/FAIL
2/0	2/0	0/0	SRO PASS/FAIL
4/0	4/0	2/0	TOTAL PASS/FAIL

REPORT DETAILS

REED REACTOR FACILITY

With Answer Key

UNITED STATES NUCLEAR REGULATORY COMMISSION

OPERATOR LICENSING EXAMINATION

December 8, 2000

ENCLOSURE 2

QUESTION A.1 [2.0 points, 0.5 each]

A neutron contributor to the production and depletion of Xenon-135 is:

1. [illegible]
3. [illegible]
4. [illegible]

QUESTION A.2 [1.0 point]

STEADY-STATE OPERATING MODE

Which factor of the Six Factor formula is affected by the reactor operator in steady-state operation?

a. Fast Fission Factor
b. Resonance Escape Probability
c. Thermal Utilization Factor
d. Reproduction Factor

QUESTION A.3 [1.0 point]

Which ONE of the following is the most significant contributor to the production of Xenon-135 in a critical reactor?

a. Neutron Absorption
b. Radioactive Decay
c. Radioactive Decay
d. Neutron Absorption

QUESTION A.4 [1.0 point]

Which factor of the Six Factor formula is affected by the reactor operator in steady-state operation?

a. Fast Fission Factor
b. Resonance Escape Probability
c. Thermal Utilization Factor
d. Reproduction Factor

QUESTION A.8 [1.0 point]

Which ONE of the following atomic nuclides is the most stable?

a. Hydrogen-2
b. Carbon-14
c. Uranium-238
d. Rhodium-103

QUESTION A.7 [1.0 point]

Reproduction factor (k) is the ratio of the number of neutrons in one generation to the number of neutrons in the previous generation. The Reproduction factor (k) is greater than one when the number of neutrons increases from one generation to the next. The Reproduction factor (k) is equal to one when the number of neutrons remains constant from one generation to the next. The Reproduction factor (k) is less than one when the number of neutrons decreases from one generation to the next.

QUESTION A.6 [1.0 point]

	Rod Height	Count Rate
a.	Higher	Same
b.	Lower	Same
c.	Same	Lower
d.	Same	Higher

QUESTION A.5 [1.0 point]

	INCREASE	SECOND
a.	$^{35}Br \rightarrow {}^{35}Kr$	$^{85}Br \rightarrow {}^{85}Se$
b.	$^{35}Br \rightarrow {}^{35}Br$	$^{87}Br \rightarrow {}^{87}Br$
c.	$^{35}Br \rightarrow {}^{35}Br$	$^{83}As \rightarrow {}^{83}Br$
d.	$^{35}Br \rightarrow {}^{35}Br$	One you stop for 10

m the number of neutrons

QUESTION A.9 [1.0 point]

QUESTION A.10 [1.0 point]

QUESTION A.11 [1.0 point]

QUESTION A.12 [1.0 point]

d. c. b. a. A characteristic peculiar to a TRIGA fuel is that it has a relatively large (and quickly acting) ...

fuel temperature coefficient. Decay of the [illegible]

QUESTION A.16 [1.0 point]

d. c. b. a. Which one of the following is the

QUESTION A.15 [1.0 point]

d. c. b. a. For most reactor fuels the [illegible]

QUESTION A.14 [1.0 point]

MAJOR source of energy released during fission?

QUESTION A.13 [1.0 point]

d. c. b. a. reaction? Which ONE of the following is the [illegible]

Delayed [illegible] a greater

QUESTION A.17 [1.0 point]

QUESTION A.18 [1.0 point]

QUESTION A.19 [1.0 point]

d. c. b. a. 10 CFR 20) listed in column B. from a column A with the type of radiation and [illegible]

550 Rem 150 rem 100 rem neutron (unbound) compounds [illegible]

QUESTION B.3 [2.0 points, 0.5 each]

4. 3. 2. 1.

Very High Radiation Area High Radiation Area

QUESTION B.2 [2.0 points, 0.5 each]

Column B

20 5 2 1 10

QUESTION B.1 [1.0 point]

QUESTION B.4 [1.0 point]

specification (contained in a license issued under this part) in an emergency when this action is immediately needed to protect the public health and safety and no action consistent with license conditions and technical specifications that can provide adequate or equivalent protection is immediately apparent.

10CFR50.54(y) states th

TOTAL EFFECTIVE DOSE EQUIVALENT

QUESTION B.5 [1.0 point]

QUESTION B.6 [1.0 point]

(TEDE)

Which ONE of the following is the

a.

b.

c.

d.

The dose

QUESTION B.10 [1.0 point]

d. 0.95
c. 0.90
b. 0.85
a. 0.80

QUESTION B.9 [1.0 point]

50 rem
25 rem
10 rem
5 rem

QUESTION B.8 [1.0 point]

8
6
4
2

QUESTION B.7 [1.0 point]

100 mR/hr
75 mR/hr
50 mR/hr
25 mR/hr

QUESTION B.11 **[1.0 point]**

Which ONE of the following is the shortest time [illegible]

a. [illegible]

b. [illegible]

QUESTION B.12 **[1.0 point]**

Which ONE of the following is the [illegible] used at the Reed Reactor Facility?

a. [illegible]

b. Emergency Support Center (evacuation not required) …

QUESTION B.13 **[1.0 point]**

Emergency classifications is the

a. [illegible]

b. [illegible]

c. [illegible]

d. Site Area Emergency

QUESTION B.14 **[1.0 point]**

Which ONE of the following is the [illegible]

a. [illegible]

b. [illegible]

c. [illegible]

d. [illegible]

d. c. b. a. Match the Federal Regulation chapter in column A with the [illegible]

10 CFR 31 [illegible] 10 CFR 50 [illegible] 1000 [illegible] cm 2 Apr. 10, 2001 [illegible] 10 feet 20 feet 40 feet 400 feet

QUESTION B.18 [1.0 point ¼ each]

QUESTION B.17 [1.0 point]

QUESTION B.16 [1.0 point]

QUESTION B.15 [1.0 point]

the limit for

the good policy limit for cleanup

4. 3. 2. 1. Column B

Special Nuclear Materials

Radioactive Materials

Specific Nuclear Materials

Reactor Licenses

d. the [illegible]

QUESTION C.4 [1.0 point]

[illegible]? Above this temperature the ...

Percent [illegible]

QUESTION C.3 [2.0 points, [illegible] each]

1. [illegible]
2. [illegible]
3. [illegible]
4. [illegible]

Co [illegible] Rate N_2 CO_2 Air H [illegible]

QUESTION C.2 [1.0 point]

[illegible]

QUESTION C.1 [2.0 points, ½ each]

[illegible] maintain [illegible]

3. [illegible]

Colum [illegible] Filter

QUESTION C.5 [1.0 point]

QUESTION C.6 [1.0 point]

QUESTION C.7 [1.0 point]

a. stick

b.

c.

d.

see

QUESTION C.8 [1.0 point]

QUESTION C.9 [1.0 point]

QUESTION C.10 [1.0 point]

QUESTION C.11 [1.0 point]

QUESTION C.12 [1.0 point]

[illegible]

QUESTION C.13 [1.0 point]

[illegible]

QUESTION C.14 [1.0 point]

[illegible]

QUESTION C.15 [1.0 point]

Which ONE of the following [illegible]

a. [illegible]

b. [illegible]

c. [illegible]

d. [illegible]

RAMGSMCAMAPM

d. c. b. a. Identify the Nuclear Instrumentation Component of the following parameters is NOT [illegible]

D C B A pH Conductivity Temperature [illegible]

QUESTION C.18 [1.0 point, ¼ each]

QUESTION C.17 [1.0 point]

QUESTION C.16 [1.0 point]

4. 3. 2. 1.

Rod Control Pulse Sleeve Discriminator

REA 17 REA 16 REA 15 REA 14 REA 13 REA 12 REA 11 REA 10 K_{eff} [illegible]

[illegible] -$2.72. Adding +$1.00 reactivity will result in a SDM of $2.72 - $1.00 = $1

Discussion [illegible]

REF.19 REF.18 Section A

RBF Training Manu

REFERENCE REF F.16 REF F.15 *REF F.14 REF F.13 REF F.12 REF F.11 REF F.10 REF F.9 REF F.8 REF F.7 REF F.6 REF F.5 REF F.4 REF F.3 REF F.2 REF F.1 Section B

d c c Emergency Plan [illegible]

Definitions

Definitions

SOP 23 T.S. §§ F.9 and A.7 p. 6. b, 3; b, 1;

c, 3; c, 1;

d, 4 d, 10

Health Physics Wipe Tests, §§ 23.7.1.6.

$$\frac{DR_1}{X_2^2} = \frac{DR_2}{X_1^2} \qquad X_2^2 = \frac{DR_1}{DR_2} \times$$

$$X_2^2 = \frac{2000}{5} \times 1^2 = 400 ft^2 \qquad X_2 = 20 f$$

REFERENCE

Section B

a, 3;

b, 2;

c

REF:15 REF:14 REF:13 REF:12 REF:11 REF:10 how long [illegible] °C–hr) constant.* However, [illegible] Section C

Examination [illegible] Primary, Secondary, Mechroom, Loft

$$Power(kilowatt) = \Delta Temperature \times 103.5 \frac{kW}{^{\circ}C - hr} \times Time$$

b, 3; b, 1

c, 3; c,

d, 4

4/2.32 °C/hr = 14.6 °C per hou

REF: 18 REF: 17 REF: 16 Section C

Facility Supplies (Mirror Contact

a, 2;

b, 1;

c, 4;

d, 3

All work done on this examination is my own. I have [illegible]

60.00 20.00 20.00 20.00 Value Category

33.3 33.3 33.3 Total % of

CANDIDATE ADMINISTERED: REACTOR TYPE:

NON-POWER INITIAL REACTO

Candidates Score

% of

U. S. NUCLEAR REGULATOI

FINAL GRADE

% Value Category

IV

Reed Reactor Facility

TRIGA 12/06

C. B. A. Category

Candidate's Signature and Radiation Control Facility Non-Radiation Training Systems Procedures Facility

DOTALS Characteristics Radiation Theory, Operating Procedures

NRC RULES AND GUIDELINES FOR LICENSE EXAMINATIONS

During the administration of this examination the following rules apply:

1. Cheating on the examination means an automatic denial of your application and could result in more severe penalties.

2. After the examination has been completed, you must sign the statement on the cover sheet indicating that the work is your own and you have neither received nor given assistance in completing the examination. This must be done after you complete the examination.

3. Restroom trips are to be limited and only one candidate at a time may leave. You must avoid all contacts with anyone outside the examination room to avoid even the appearance or possibility of cheating.

4. Use black ink or dark pencil <u>only</u> to facilitate legible reproductions.

5. Print your name in the blank provided in the upper right-hand corner of the examination cover sheet and each answer sheet.

6. Mark your answers on the answer sheet provided. USE ONLY THE PAPER PROVIDED AND DO NOT WRITE ON THE BACK SIDE OF THE PAGE.

7. The point value for each question is indicated in [brackets] after the question.

8. If the intent of a question is unclear, ask questions of the examiner only.

9. When turning in your examination, assemble the completed examination with examination questions, examination aids and answer sheets. In addition turn in all scrap paper.

10. Ensure all information you wish to have evaluated as part of your answer is on your answer sheet. Scrap paper will be disposed of immediately following the examination.

11. To pass the examination you must achieve a grade of 70 percent or greater in each category.

12. There is a time limit of three (3) hours for completion of the examination.

13. When you have completed and turned in you examination, leave the examination area. If you are observed in this area while the examination is still in progress, your license may be denied or revoked.

EQUATION SHEET

$$\dot{Q} = \dot{m}c_p\,\beta T = \dot{m}\,\beta H = UA\,\beta T$$

$$P_{max} = \frac{(\beta-\beta)^2}{2\beta(k)\ell}$$

$$\ell^* = 1 \ x\ 10^{-4}\ seconds$$

$$\beta_{eff} = 0.1\ seconds^{-1}$$

$$SCR = \frac{S}{-\beta} \approx \frac{S}{1-K_{eff}}$$

$$CR_1(1-K_{eff_1}) = CR_2(1-K_{eff_2})$$

$$CR_1(-\beta_1) = CR_2(-\beta_2)$$

$$SUR = 26.06\left[\frac{\beta_{eff}\beta}{\beta-\beta}\right]$$

$$M = \frac{1-K_{eff_0}}{1-K_{eff_1}}$$

$$M = \frac{1}{1-K_{eff}} = \frac{CR_1}{CR_2}$$

$$P = P_0\ 10^{SUR(t)}$$

$$P = P_0\ e^{\frac{t}{\beta}}$$

$$P = \frac{\beta(1-\beta)}{\beta-\beta}\ P_0$$

$$SDM = \frac{(1-K_{eff})}{K_{eff}}$$

$$\beta = \frac{\ell^*}{\beta\ -\ \bar{\beta}}$$

$$\beta = \frac{\ell^*}{\beta} + \left[\frac{\bar{\beta}-\beta}{\beta_{eff}\beta}\right]$$

$$\beta\beta = \frac{K_{eff_2} - K_{eff_1}}{k_{eff_1}\times K_{eff_2}}$$

$$T_{½} = \frac{0.693}{\beta}$$

$$\beta = \frac{(K_{eff}-1)}{K_{eff}}$$

$$DR = DR_0\ e^{-\beta t}$$

$$DR = \frac{6CiE(n)}{R^2}$$

$$DR_1 d_1^2 = DR_2 d_2^2$$

DR – Rem, Ci – curies, E – Mev, R – feet

$$\frac{(\beta_2-\beta)^2}{Peak_2} = \frac{(\beta_1-\beta)^2}{Peak_1}$$

1 Curie = 3.7 x 10^{10} dis/sec

1 kg = 2.21 lbm

1 Horsepower = 2.54 x 10^3 BTU/hr

1 Mw = 3.41 x 10^6 BTU/hr

1 BTU = 778 ft-lbf

°F = 9/5 °C + 32

1 gal (H_2O) ≈ 8 lbm

°C = 5/9 (°F - 32)

c_P = 1.0 BTU/hr/lbm/°F

c_p = 1 cal/sec/gm/°C

Section A ~~Theo~~

A.1a 1 2 3 4 ___

A.1b 1 2 3 4 ___

A.1c 1 2 3 4 ___

A.1d 1 2 3 4 ___

A.2 a b c d ___

A.3 a b c d ___

A.4 a b c d ___

A.5 a b c d ___

A.6 a b c d ___

A.7 a b c d ___

A.8 a b c d ___

A.9 a b c d ___

A.10 a b c d ___

A.11 a b c d ___

A.12 a b c d ___

A.13 a b c d ___

A.14 a b c d ___

A.15 a b c d ___

A.16 a b c d ___

A.17 a b c d ___

A.18 a b c d ___

A.19 a b c d ___

Section B Norma

B.1 a b c d ___

B.2a 1 2 5 10 20 ___

B.2b 1 2 5 10 20 ___

B.2c 1 2 5 10 20 ___

B.2d 1 2 5 10 20 ___

B.3a 1 2 3 4 ___

B.3b 1 2 3 4 ___

B.3d 1 2 3 4 ___

B.4 a b c d ___

B.5 a b c d ___

B.6 a b c d ___

B.7 a b c d ___

B.8 a b c d ___

B.9 a b c d ___

B.10 a b c d ___

B.11 a b c d ___

B.12 a b c d ___

B.13 a b c d ___

B.14 a b c d ___

B.15 a b c d ___

B.16 a b c d ___

B.17 a b c d ___

B.18a 1 2 3 4 ___

B.18b 1 2 3 4 ___

B.18c 1 2 3 4 ___

B.18d 1 2 3 4 ___

Section C Facilit

C.1a 1 2 3 ___

C.1b 1 2 3 ___

C.1c 1 2 3 ___

C.1d 1 2 3 ___

C.2 a b c d ___

C.3a 1 2 3 4 ___

C.3b 1 2 3 4 ___

C.3c 1 2 3 4 ___

C.3d 1 2 3 4 ___

C.4 a b c d ___

C.5 a b c d ___

C.6 a b c d ___

C.7 a b c d ___

C.8 a b c d ___

C.9 a b c d ___

C.10 a b c d ___

C.11 a b c d ___

C.12 a b c d ___

C.13 a b c d ___

C.14 a b c d ___

C.15 a b c d ___

C.16 a b c d ___

C.17 a b c d ___

C.18a 1 2 3 4 ___

C.18b 1 2 3 4 ___

C.18c 1 2 3 4 ___

C.18d 1 2 3 4 ___

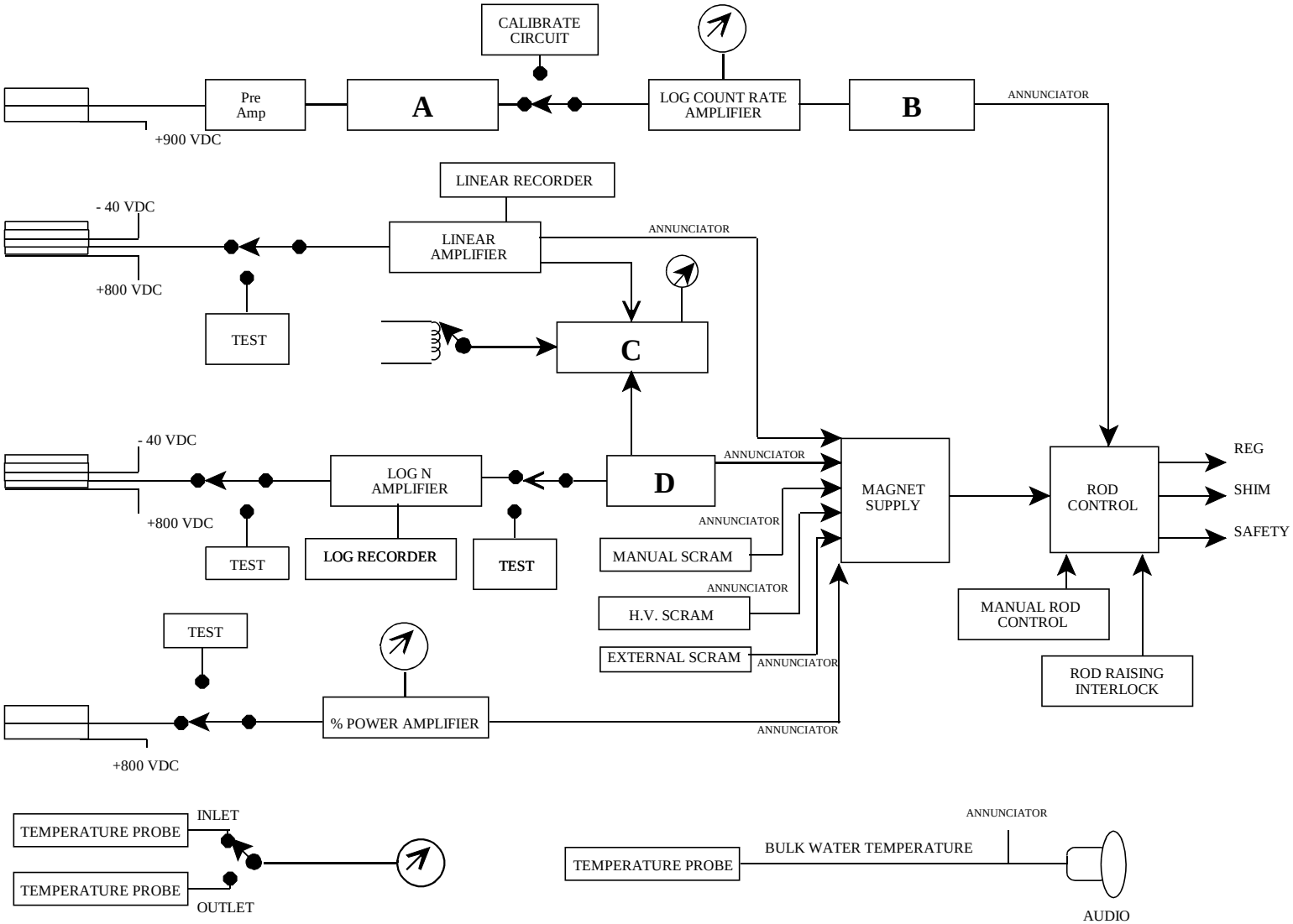
CALIBRATE CIRCUIT
Pre Amp
A
LOG COUNT RATE AMPLIFIER
B
ANNUNCIATOR
+900 VDC
LINEAR RECORDER
- 40 VDC
LINEAR AMPLIFIER
ANNUNCIATOR
+800 VDC
TEST
C
- 40 VDC
LOG N AMPLIFIER
D
ANNUNCIATOR
MAGNET SUPPLY
ROD CONTROL
REG
SHIM
SAFETY
+800 VDC
TEST
LOG RECORDER
TEST
ANNUNCIATOR
MANUAL SCRAM
ANNUNCIATOR
H.V. SCRAM
EXTERNAL SCRAM
ANNUNCIATOR
MANUAL ROD CONTROL
ROD RAISING INTERLOCK
TEST
% POWER AMPLIFIER
ANNUNCIATOR
+800 VDC
TEMPERATURE PROBE
INLET
TEMPERATURE PROBE
OUTLET
ANNUNCIATOR
TEMPERATURE PROBE
BULK WATER TEMPERATURE
AUDIO

July 2000

Sunday	Monday	Tuesday	Wednesday	Thursday	Friday	Saturday
						1
2	3	4	5	6	7	8
9	10	11	12	13	14	15
16	17	18	19	20	21	22
23	24	25	26	27	28	29
30	31					

August 1999

Sunday	Monday	Tuesday	Wednesday	Thursday	Friday	Saturday
		1	2	3	4	5
6	7	8	9	10	11	12
13	14	15	16	17	18	19
20	21	22	23	24	25	26
27	28	29	30	31		

September 2000

Sunday	Monday	Tuesday	Wednesday	Thursday	Friday	Saturday
					1	2
3	4	5	6	7	8	9
01	11	12	13	14	15	16
17	18	19	20	21	22	23
24	25	26	27	28	29	30

October 2000

Sunday	Monday	Tuesday	Wednesday	Thursday	Friday	Saturday
1	2	3	4	5	6	7
8	9	10	11	12	13	14
15	16	17	18	19	20	21
22	23	24	25	26	27	28
29	30	31				

November 2000

Sunday	Monday	Tuesday	Wednesday	Thursday	Friday	Saturday
			1	2	3	4
5	6	7	8	9	10	11
12	13	14	15	16	17	18
19	20	21	22	23	24	25
26	27	28	29	30		

December 2000

Sunday	Monday	Tuesday	Wednesday	Thursday	Friday	Saturday
					1	2
3	4	5	6	7	8	9
10	11	12	13	14	15	16
17	18	19	20	21	22	23
24	25	26	27	28	29	30
31						

January 2001

Sunday	Monday	Tuesday	Wednesday	Thursday	Friday	Saturday
	1	2	3	4	5	6
7	8	9	10	11	12	13
14	15	16	17	18	19	20
21	22	23	24	25	26	27
28	29	30	31			

February 2001

Sunday	Monday	Tuesday	Wednesday	Thursday	Friday	Saturday
				1	2	3
4	5	6	7	8	9	10
11	12	13	14	15	16	17
18	19	20	21	22	23	24
25	26	27	28			

March 2001

Sunday	Monday	Tuesday	Wednesday	Thursday	Friday	Saturday
				1	2	3
4	5	6	7	8	9	10
11	12	13	14	15	16	17
18	19	20	21	22	23	24
25	26	27	28	29	30	31

April 2001

Sunday	Monday	Tuesday	Wednesday	Thursday	Friday	Saturday
1	23	4	5	6	7	8
9	10	11	12	13	14	15
16	17	18	19	20	21	22
23	24	25	26	27	28	29
30						

May 2001

Sunday	Monday	Tuesday	Wednesday	Thursday	Friday	Saturday
	1	2	3	4	5	6
7	8	9	10	11	12	13
14	15	16	17	18	19	20
21	22	23	24	25	26	27
28	29	30	31			

June 2001

Sunday	Monday	Tuesday	Wednesday	Thursday	Friday	Saturday
				1	2	3
4	5	6	7	8	9	10
11	12	13	14	15	16	17
18	19	20	21	22	23	24
25	26	27	28	29	30	

NO ___ YES _X_ CAN THIS DO

12/ /2000 SECRETARY (dispatch) 4

12/ /2000 LMARSH 3

12/ /2000 EBARNHILL 2

12/ /2000 PDOYLE 1

DATE NAME

INITIAL EXAMINATION REPORT SUBJECT:

ACCESSION N