October 12, 1989

Docket No. 50-286

DISTRIBUTION

Docket File	JCalvo
NRC&Local PDRs	ACRS (10)
PDI-1 RF	GPA/PA
SAVarga	OC/LFMB
AD RI	GMeyer
CVogan	LKopp
JNeighbors	CHinson
OGC	JMinns
DHagan	DShum
EJordan	HAshar
TMeek (4)	RCapra
Wanda Jones	JWing

Mr. John C. Brons
Executive Vice President - Nuclear Generation
Power Authority of the State of New York
123 Main Street
White Plains, New York 10601

Dear Mr. Brons:

SUBJECT: ISSUANCE OF AMENDMENT (TAC NO. 68233)

The Commission has issued the enclosed Amendment No. 90 to Facility Operating License No. DPR-64 for the Indian Point Nuclear Generating Unit No. 3. The amendment consists of changes to the Technical Specifications in response to your application transmitted by letter dated May 9, 1988, as supplemented June 9, 1988, December 20, 1988, May 26, 1989 and September 15, 1989.

The amendment revises the Technical Specifications to allow for the expansion of the spent fuel pool storage capacity from the current 840 fuel assemblies to the proposed 1345 fuel assemblies. This change also increases the fuel enrichment from 4.3 w/o U-235 to 4.5 w/o U-235.

A copy of the related Safety Evaluation is enclosed. A Notice of Issuance will be included in the Commission's next regular bi-weekly Federal Register notice.

Sincerely,

Original signed by

Joseph D. Neighbors, Senior Project Manager
Project Directorate I-1
Division of Reactor Projects - I/II
Office of Nuclear Reactor Regulation

Enclosures:
1. Amendment No. 90 to DPR-64
2. Safety Evaluation

cc: w/enclosures
See next page

IP3 AMENDMENT TAC 68233

DF01
1/1

CP-1

OFC:	PDI-1	PDI-1	OGC	PDI-1		
NAME:	CVogan	JNeighbors		RCapra		
DATE:	9/29/89	9/29/89	10/10/89	10/12/89		

OFFICIAL RECORD COPY

10/12/89

8910200126 891012
PDR ADOCK 05000286
P PDC

UNITED STATES
NUCLEAR REGULATORY COMMISSION
WASHINGTON, D. C. 20555

October 12, 1989

Docket No. 50-286

Mr. John C. Brons
Executive Vice President - Nuclear Generation
Power Authority of the State of New York
123 Main Street
White Plains, New York 10601

Dear Mr. Brons:

SUBJECT: ISSUANCE OF AMENDMENT (TAC NO. 68233)

The Commission has issued the enclosed Amendment No. 90 to Facility Operating License No. DPR-64 for the Indian Point Nuclear Generating Unit No. 3. The amendment consists of changes to the Technical Specifications in response to your application transmitted by letter dated May 9, 1988, as supplemented June 9, 1988, December 20, 1988, May 26, 1989 and September 15, 1989.

The amendment revises the Technical Specifications to allow for the expansion of the spent fuel pool storage capacity from the current 840 fuel assemblies to the proposed 1345 fuel assemblies. This change also increases the fuel enrichment from 4.3 w/o U-235 to 4.5 w/o U-235.

A copy of the related Safety Evaluation is enclosed. A Notice of Issuance will be included in the Commission's next regular bi-weekly Federal Register notice.

Sincerely,

Joseph D. Neighbors

Joseph D. Neighbors, Senior Project Manager
Project Directorate I-1
Division of Reactor Projects - I/II
Office of Nuclear Reactor Regulation

Enclosures:
1. Amendment No. 90 to DPR-64
2. Safety Evaluation

cc: w/enclosures
See next page

Mr. John C. Brons
Power Authority of the State
of New York

Indian Point 3 Nuclear Power Plant

cc:

Regional Administrator, Region I
U.S. Nuclear Regulatory Commission
475 Allendale Road
King of Prussia, Pennsylvania 19406

Mr. Gerald C. Goldstein
Assistant General Counsel
Power Authority of the State
of New York
1633 Broadway
New York, New York 10019

Mr. Phillip Bayne, President
Power Authority of the State
of New York
123 Main Street
White Plains, New York 10601

Mr. Joseph E. Russell
Resident Manager
Indian Point 3 Nuclear Power Plant
Post Office Box 215
Buchanan, New York 10511

Mr. George M. Wilverding, Manager
Nuclear Safety Evaluation
Power Authority of the State
of New York
123 Main Street
White Plains, New York 10601

Mr. Peter Kokolakis, Director
Nuclear Licensing
Power Authority of the State
of New York
123 Main Street
White Plains, New York, 10601

Ms. Donna Ross
New York State Energy Office
2 Empire State Plaza
16th Floor
Albany, New York 12223

Mr. William Josiger, Vice President
Operations and Maintenance
Power Authority of the State
of New York
123 Main Street
White Plains, New York 10601

Resident Inspector
Indian Point 3 Nuclear Power Plant
U.S. Nuclear Regulatory Commission
Post Office Box 337
Buchanan, New York 10511

Mr. Robert L. Spring
Nuclear Licensing Engineer
Consolidated Edison Company
of New York, Inc.
New York, New York 10003

Mr. A. Klausmann, Vice President
Quality Assurance
Power Authority of the State
of New York
1633 Broadway
New York, New York 10019

Mayor, Village of Buchanan
236 Tate Avenue
Buchanan, New York 10511

Mr. F. X. Pindar
Quality Assurance Superintendent
Indian Point 3 Nuclear Power Plant
Post Office Box 215
Buchanan, New York 10511

Mr. R. Beedle, Vice President
Nuclear Support
Power Authority of the State
of New York
123 Main Street
White Plains, New York 10601

Mr. S. S. Zulla, Vice President
Nuclear Engineering
Power Authority of the State
of New York
123 Main Street
White Plains, New York 10601

Charlie Donaldson, Esquire
Assistant Attorney General
New York Department of Law
120 Broadway
New York, New York 10271

UNITED STATES
NUCLEAR REGULATORY COMMISSION
WASHINGTON, D. C. 20555

October 12, 1989

Docket No. 50-286

Mr. John C. Brons
Executive Vice President - Nuclear Generation
Power Authority of the State of New York
123 Main Street
White Plains, New York 10601

Dear Mr. Brons:

SUBJECT: ISSUANCE OF AMENDMENT (TAC NO. 68233)

The Commission has issued the enclosed Amendment No. 90 to Facility Operating License No. DPR-64 for the Indian Point Nuclear Generating Unit No. 3. The amendment consists of changes to the Technical Specifications in response to your application transmitted by letter dated May 9, 1988, as supplemented June 9, 1988, December 20, 1988, May 26, 1989 and September 15, 1989.

The amendment revises the Technical Specifications to allow for the expansion of the spent fuel pool storage capacity from the current 840 fuel assemblies to the proposed 1345 fuel assemblies. This change also increases the fuel enrichment from 4.3 w/o U-235 to 4.5 w/o U-235.

A copy of the related Safety Evaluation is enclosed. A Notice of Issuance will be included in the Commission's next regular bi-weekly Federal Register notice.

Sincerely,

Joseph D. Neighbors

Joseph D. Neighbors, Senior Project Manager
Project Directorate I-1
Division of Reactor Projects - I/II
Office of Nuclear Reactor Regulation

Enclosures:
1. Amendment No. 90 to DPR-64
2. Safety Evaluation

cc: w/enclosures
See next page

Mr. John C. Brons
Power Authority of the State
of New York

Indian Point 3 Nuclear Power Plant

cc:

Regional Administrator, Region I
U.S. Nuclear Regulatory Commission
475 Allendale Road
King of Prussia, Pennsylvania 19406

Mr. Gerald C. Goldstein
Assistant General Counsel
Power Authority of the State
of New York
1633 Broadway
New York, New York 10019

Mr. Phillip Bayne, President
Power Authority of the State
of New York
123 Main Street
White Plains, New York 10601

Mr. Joseph E. Russell
Resident Manager
Indian Point 3 Nuclear Power Plant
Post Office Box 215
Buchanan, New York 10511

Mr. George M. Wilverding, Manager
Nuclear Safety Evaluation
Power Authority of the State
of New York
123 Main Street
White Plains, New York 10601

Mr. Peter Kokolakis, Director
Nuclear Licensing
Power Authority of the State
of New York
123 Main Street
White Plains, New York, 10601

Ms. Donna Ross
New York State Energy Office
2 Empire State Plaza
16th Floor
Albany, New York 12223

Mr. William Josiger, Vice President
Operations and Maintenance
Power Authority of the State
of New York
123 Main Street
White Plains, New York 10601

Resident Inspector
Indian Point 3 Nuclear Power Plant
U.S. Nuclear Regulatory Commission
Post Office Box 337
Buchanan, New York 10511

Mr. Robert L. Spring
Nuclear Licensing Engineer
Consolidated Edison Company
of New York, Inc.
New York, New York 10003

Mr. A. Klausmann, Vice President
Quality Assurance
Power Authority of the State
of New York
1633 Broadway
New York, New York 10019

Mayor, Village of Buchanan
236 Tate Avenue
Buchanan, New York 10511

Mr. F. X. Pindar
Quality Assurance Superintendent
Indian Point 3 Nuclear Power Plant
Post Office Box 215
Buchanan, New York 10511

Mr. R. Beedle, Vice President
Nuclear Support
Power Authority of the State
of New York
123 Main Street
White Plains, New York 10601

Mr. S. S. Zulla, Vice President
Nuclear Engineering
Power Authority of the State
of New York
123 Main Street
White Plains, New York 10601

Charlie Donaldson, Esquire
Assistant Attorney General
New York Department of Law
120 Broadway
New York, New York 10271

UNITED STATES
NUCLEAR REGULATORY COMMISSION
WASHINGTON, D. C. 20555

POWER AUTHORITY OF THE STATE OF NEW YORK

DOCKET NO. 50-286

INDIAN POINT NUCLEAR GENERATING UNIT NO. 3

AMENDMENT TO FACILITY OPERATING LICENSE

Amendment No. 90
License No. DPR-64

1. The Nuclear Regulatory Commission (the Commission) has found that:

   A. The application for amendment by the Power Authority of the State of New York (the licensee) dated May 9, 1988, as supplemented June 9, 1988, December 20, 1988, May 26, 1989 and September 15, 1989, complies with the standards and requirements of the Atomic Energy Act of 1954, as amended (the Act) and the Commission's rules and regulations set forth in 10 CFR Chapter I;

   B. The facility will operate in conformity with the application, the provisions of the Act, and the rules and regulations of the Commission;

   C. There is reasonable assurance (i) that the activities authorized by this amendment can be conducted without endangering the health and safety of the public, and (ii) that such activities will be conducted in compliance with the Commission's regulations;

   D. The issuance of this amendment will not be inimical to the common defense and security or to the health and safety of the public; and

   E. The issuance of this amendment is in accordance with 10 CFR Part 51 of the Commission's regulations and all applicable requirements have been satisfied.

2. Accordingly, the license is amended by changes to the Technical Specifications as indicated in the attachment to this license amendment, and paragraph 2.C.(2) of Facility Operating License No. DPR-64 is hereby amended to read as follows:

8910200127 891012
PDR ADOCK 05000286
P PDC

(2) Technical Specifications

The Technical Specifications contained in Appendices A and B, as revised through Amendment No. 90 , are hereby incorporated in the license. The licensee shall operate the facility in accordance with the Technical Specifications.

3. This license amendment is effective as of the date of its issuance.

FOR THE NUCLEAR REGULATORY COMMISSION

Robert A. Capra

Robert A. Capra, Director
Project Directorate I-1
Division of Reactor Projects - I/II
Office of Nuclear Reactor Regulation

Attachment:
Changes to the Technical
Specifications

Date of Issuance: October 12, 1989

ATTACHMENT TO LICENSE AMENDMENT NO. 90

FACILITY OPERATING LICENSE NO. DPR-64

DOCKET NO. 50-286

Revise Appendix A as follows:

Remove Pages	Insert Pages
List of Figures	List of Figures
3.8-2	3.8-2
3.8-3	3.8-3
3.8-4	3.8-4
3.8-5	3.8-5
3.8-6	3.8-6
	3.8-7
	Figure 3.8-2
	Figure 3.8-3
5.3-1	5.3-1
5.4-1	5.4-1

LIST OF FIGURES

Title	Figure No.
Core Limits - Four Loop Operation	2.1-1
Maximum Permissible T_{cold} for First RCP Start (OPS Operable, Hottest SG Temp. > T_{cold})	3.1.A-1
Maximum Permissible RCS Pressure for RCP Start(s) with OPS Inoperable (SG Temp. > T_{cold} for additional pump starts, SG Temp. < T_{cold} for all pump starts)	3.1.A-2
RCS Pressure Limits for Low Temperature Operation	3.1.A-3
Maximum Pressure Limits for OPS Inoperable and First RCP Start (SG Temp. > T_{cold})	3.1.A-4
Pressurizer Level for OPS Inoperable and One (1) Charging Pump Energized	3.1.A-5
Pressurizer Level for OPS Inoperable and One (1) Safety Injection Pump and/or Three (3) Charging Pumps Energized	3.1.A-6
Reactor Coolant System Heatup Limitations	3.1-1
Reactor Coolant System Cooldown Limitations	3.1-2
Primary Coolant Specific Activity Limit vs. Percent of Rated Thermal Power	3.1-3
Gross Electrical Output - 1" HG Backpressure	3.4-1
Gross Electrical Output - 1.5" HG Backpressure	3.4-2
Limiting Fuel Burnup vs. Initial Enrichment	3.8-1
Minumum Burnup for Storage of Fuel in Max Density Spent Fuel Pit Racks	3.8-2
Maximum Density Spent Fuel Pit (SFP) Racks, Regions and Indexing	3.8-3
Required Shutdown Margin	3.10-1
Hot Channel Factor Normalized Operating Envelope	3.10-2
Rod Insertion Limits, 100 Step Overlap - Four Loop Operation	3.10-4
Steam Generator Primary Side Ultrasonic Test Sectors	4.2-1
Pressure/Temperature Limitations for Hydrostatic Leak Test	4.3-1

8. The containment vent and purge system, including the radiation monitors which initiate isolation, shall be tested and verified to be operable within 100 hours prior to refueling operations.

9. No movement of irradiated fuel in the reactor shall be made until the reactor has been subcritical for at least 145 hours. In addition, movement of fuel in the reactor before the reactor has been subcritical for equal to or greater than 365 hours will necessitate operation of the Containment Building Vent and Purge System through the HEPA filters and charcoal absorbers. For this case operability of the Containment Building Vent and Purge System shall be established in accordance with Section 4.13 of the Technical Specifications. In the event that more than one region of fuel (72 assemblies) is to be discharged from the reactor, those assemblies in excess of one region shall not be discharged before the interval of 267 hours has elapsed after shutdown.

10. Whenever movement of irradiated fuel is being made, the minimum water level in the area of movement shall be maintained 23 feet over the top of the reactor pressure vessel flange.

11. Hoists or cranes utilized in handling irradiated fuel shall be dead-load tested before movement begins. The load assumed by the hoists or cranes for this test must be equal to or greater than the maximum load to be assumed by the hoists or cranes during the refueling operation. A thorough visual inspection of the hoists or cranes shall be made after the deadload test and prior to fuel handling. A test of interlocks and overload cutoff devices on the manipulator shall also be performed.

12. The fuel storage building emergency ventilation system shall be operable whenever irradiated fuel is being handled within the fuel storage building. The emergency ventilation system may be inoperable when irradiated fuel is in the fuel storage building, provided irradiated fuel is not being handled and neither the spent fuel cask nor the cask crane are moved over the spent fuel pit during the period of inoperability.

13. To ensure redundant decay heat removal capability, at least two of the following requirements shall be met:

a. No. 31 residual heat removal pump and heat exchanger, together with their associated piping and valves are operable.

b. No. 32 residual heat removal pump and heat exchanger, together with their associated piping and valves are operable.

c. The water level in the refueling cavity above the top of the reactor vessel flange is equal to or greater than 23 feet.

B. If any of the specified limiting conditions for refueling are not met, refueling shall cease until the specified limits are met, and no operations which may increase the reactivity of the core shall be made.

C. During fuel handling and storage operations, the following conditions shall be met:

1. Radiation levels in the spent fuel storage area shall be monitored continuously whenever there is irradiated fuel stored therein. If the monitor is inoperable, a portable monitor may be used.

2. The spent fuel cask shall not be moved over any region of the spent fuel pit which contains irradiated fuel. Additionally, if the spent fuel pit contains irradiated fuel, no loads in excess of 2,000 pounds shall be moved over any region of the spent fuel pit. This prohibition does not apply to the movement of the existing high density or replacement maximum density spent fuel storage racks over the spent fuel pit during the storage rack replacement effort, provided that the fuel stored in the spent fuel pit has been subcritical for a minimum of 120 days.

3. During periods of spent fuel cask or fuel storage building cask crane movement over the spent fuel pit, or during periods of spent fuel movement in the spent fuel pit when the pit contains irradiated fuel, the pit shall be filled with borated water at a concentration of >1000 ppm.

4. Whenever movement of irradiated fuel in the spent fuel pit is being made, the minimum water level in the area of movement shall be maintained 23 feet over the top of irradiated fuel assemblies seated in the storage rack.

5. Hoists or cranes utilized in handling irradiated fuel shall be deadload tested before fuel movement begins. The load assumed by the hoists or cranes for this test must be equal to or greater than the maximum load to be assumed by the hoists or cranes during the fuel handling operation. A thorough visual inspection of the hoists or cranes shall be made after the deadload test prior to fuel handling.

6. The fuel storage building emergency ventilation system shall be operable whenever irradiated fuel is being handled within the fuel storage building. The emergency ventilation system may be inoperable when irradiated fuel is in the fuel storage building, provided irradiated fuel is not being handled and neither the spent fuel cask nor the cask crane are moved over the spent fuel pit during the periods of inoperability.

7. Fuel Storage in High Density Spent Fuel Racks Only:

   Fuel assemblies to be stored in the spent fuel pit can be categorized as either Category 1, 2 or 3 based on burnup and initial enrichment as specified in Figure 3.8-1. Category 2 fuel shall be loaded into the spent fuel pool storage locations in a checkerboard fashion with the intermediate storage locations containing Category 1 fuel, non-fuel materials or left empty. Unless restricted by the above, Category 1 or 3 fuel can be stored in any location in the spent fuel pool.

8. Fuel Storage in Maximum Density Spent Fuel Racks Only:

   Fuel assemblies of initial enrichment less than or equal to 4.5 w/o U-235 can be stored in Region 1 (rows SS-ZZ, columns 35-64) of the spent fuel storage racks. Fuel assemblies to be stored in Region 2 (rows A-RR, columns 1-34) of the spent fuel storage racks shall have a minimum burnup exposure as a function of initial enrichment as specified in Figure 3.8-2. The locations of Region 1 and 2 of the spent fuel storage racks are shown in Figure 3.8-3.

D. When any fuel assemblies are in the reactor vessel and the reactor vessel head bolts are less than fully tensioned, the boron concentration of all filled portions of the Reactor Coolant System and the refueling canal shall be maintained uniform and sufficient to ensure that the more restrictive of the following reactivity conditions is met; either:

   a. A shutdown margin greater than or equal to 5% $\Delta K/K$

   or

   b. A boron concentration of greater than or equal to 1900 ppm.

The required boron concentration will be verified by chemical analysis daily. With the requirements of the above specification not satisfied, immediately suspend all operations involving core alterations or positive reactivity changes and initiate boration to return to the more restrictive of the limits above.

Basis

The equipment and general procedures to be utilized during refueling, fuel handling, and storage are discussed in the FSAR. Detailed instructions, the above specified precautions, and the design of the fuel handling equipment incorporating built-in interlocks and safety features, provide assurance that no incident could occur during the refueling, fuel handling, reactor maintenance or storage operations that would result in a hazard to public health and safety.(1) Whenever changes are not being made in core geometry, one flux monitor is sufficient. This permits maintenance of the instrumentation. Continuous monitoring of radiation levels and neutron flux provides immediate indication of an unsafe condition. The residual heat removal pump is used to maintain a uniform boron concentration.

The shutdown margin indicated will keep the core subcritical. During refueling the reactor refueling cavity is filled with approximately 342,000 gallons of water from the refueling water storage tank with a boron concentration of 2000 ppm. Periodic checks of refueling water boron concentration and residual heat removal pump operation insure the proper shutdown margin. The requirement for direct communications allows the control room operator to inform the manipulator operator of any impending unsafe condition detected from the main control board indicators during fuel movement.

The minimum boron concentration of this water is the more restrictive of either 1900 ppm or else sufficient to maintain the reactor subcritical by at least 5% $\Delta K/K$ in the cold shutdown condition with all rods inserted. These limitations are consistent with the initial conditions assumed for the boron dilution incident in the safety analyses.

In addition to the above safeguards, interlocks are utilized during refueling to ensure safe handling. An excess weight interlock is provided on the lifting hoist to prevent movement of more than one fuel assembly at a time. The spent fuel transfer mechanism can accommodate only one fuel assembly at a time.

The 145-hour decay time following the subcritical condition and the 23 feet of water above the top of the reactor pressure vessel flange bounds the assumptions used in the dose calculation for the fuel-handling accident. The 145-hour decay time is based on limiting calculated worst-case spent fuel pool temperature rise to 150° during normal refueling conditions.

The waiting time of 267 hours required following plant shutdown before unloading more than one region of fuel from the reactor assures that the maximum pool water temperature will be within design objectives as stated in the FSAR. The calculations confirming this are based on an inlet river temperature of 87.8°F, service water flow to the component cooling heat exchangers of 7000 gpm (FSAR) and component cooling flow to the Spent Fuel Pit heat exchanger of 2800 gpm (FSAR).

The requirement for the fuel storage building emergency ventilation system to be operable is established in accordance with standard testing requirements to assure that the system will function to reduce the offsite dose to within acceptable limits in the event of a fuel-handling accident. The fuel storage building emergency ventilation system must be operable whenever irradiated fuel has had a continuous 45 day decay period, the fuel storage building emergency ventilation system is not technically necessary, even though the system is required to be operable during all fuel handling operations. Fuel Storage Building isolation is actuated upon receipt of a signal from the area high activity alarm or by manual operation. The emergency ventilation bypass assembly is manually isolated, using manual isolation devices, prior to movement of any irradiated fuel. This ensures that all air flow is directed through the emergency ventilation HEPA filters and charcoal adsorbers. The ventilation system is tested prior to all fuel handling activities to ensure the proper operation of the filtration system.

When fuel in the reactor is moved before the reactor has been subcritical for at least 365 hours, the limitations on the containment vent and purge system ensure that all radioactive material released from an irradiated fuel assembly will be filtered through the HEPA filters and charcoal adsorbers prior to discharge to the atmosphere.

The limit to have at least two means of decay heat removal operable ensures that a single failure of the operating RHR System will not result in a total loss of decay heat removal capability. With the reactor head removed and 23 feet of water above the vessel flange, a large heat sink is available for core cooling. Thus, in the event of a single component failure, adequate time is provided to initiate diverse methods to cool the core.

The minimum spent fuel pit boron concentration and the restriction of the movement of the spent fuel cask over irradiated fuel were specified in order to minimize the consequences of an unlikely sideways cask drop.

Fuel assemblies whose initial enrichment is greater than 3.5 w/o U-235 but less than or equal to 4.3 w/o can be stored in the spent fuel pool providing they are placed in a checkerboard array with fuel whose initial enrichment and burnup are sufficient to ensure that K_{eff} is less than 0.95 with no soluble boron present. This is ensured by categorizing the fuel whose initial enrichment is greater than 3.5 w/o U-235 but less than or

equal to 4.3 w/o and whose burnup is below the curve of Figure 3.8-1 as Category 2. This fuel can be stored by checkerboarding with Category 1 fuel which is defined as fuel whose initial enrichment and burnup place it on or above and to the left of the curve in Figure 3.8-1. Category 3 fuel which is less than or equal to 3.5 w/o U-235 and below the curve of Figure 3.8-1 cannot be used in the checkerboard with Category 2 fuel. Any Category 1 or 3 fuel can continue to be stored on a repeating x-y array with other non-Category 2 fuel. For the purpose of storing Category 2 fuel, non-fuel material or empty locations can be utilized in place of Category 1 fuel.

As shown in Figure 3.8-3 the maximum density spent fuel storage racks consist of two regions: Region 1 (rows SS - ZZ, columns 35-64) and Region 2 (rows A - RR, columns 1-34). Fuel assemblies of initial enrichment of less than or equal to 4.5 w/o U-235 may be stored in Region 1 of the replacement maximum density spent fuel storage racks. Fuel assemblies to be stored in Region 2 of the replacement racks must have a minimum burnup exposure as a function of initial enrichment as specified in Figure 3.8-2. Administrative controls will provide verification that each fuel assembly to be placed in Region 2 of the replacement racks satisfies the burnup criterion.

When the spent fuel cask is being placed in or removed from its position in the spent fuel pit, mechanical stops incorporated in the bridge rails make it impossible for the bridge of the crane to travel further north than a point directly over the spot reserved for the cask in the pit. Thus, it will be possible to handle the spent fuel cask with the 40-ton hook and to move new fuel to the new fuel elevator with a 5-ton hook, but it will be impossible to carry any object over the spent fuel storage area with either the 40 or 5-ton hook of the fuel storage building crane.

During the spent fuel storage rack replacement effort, the mechanical stops incorporated in the crane bridge rails will be removed. However, adminsitrative controls will preclude the movement of the existing high density or replacement maximum density racks over spent fuel assemblies.

Dead load tests and visual inspection of the hoists and cranes before handling irradiated fuel provide assurance that the hoists or cranes are capable of proper operation.

References

(1) FSAR - Section 9.5.2

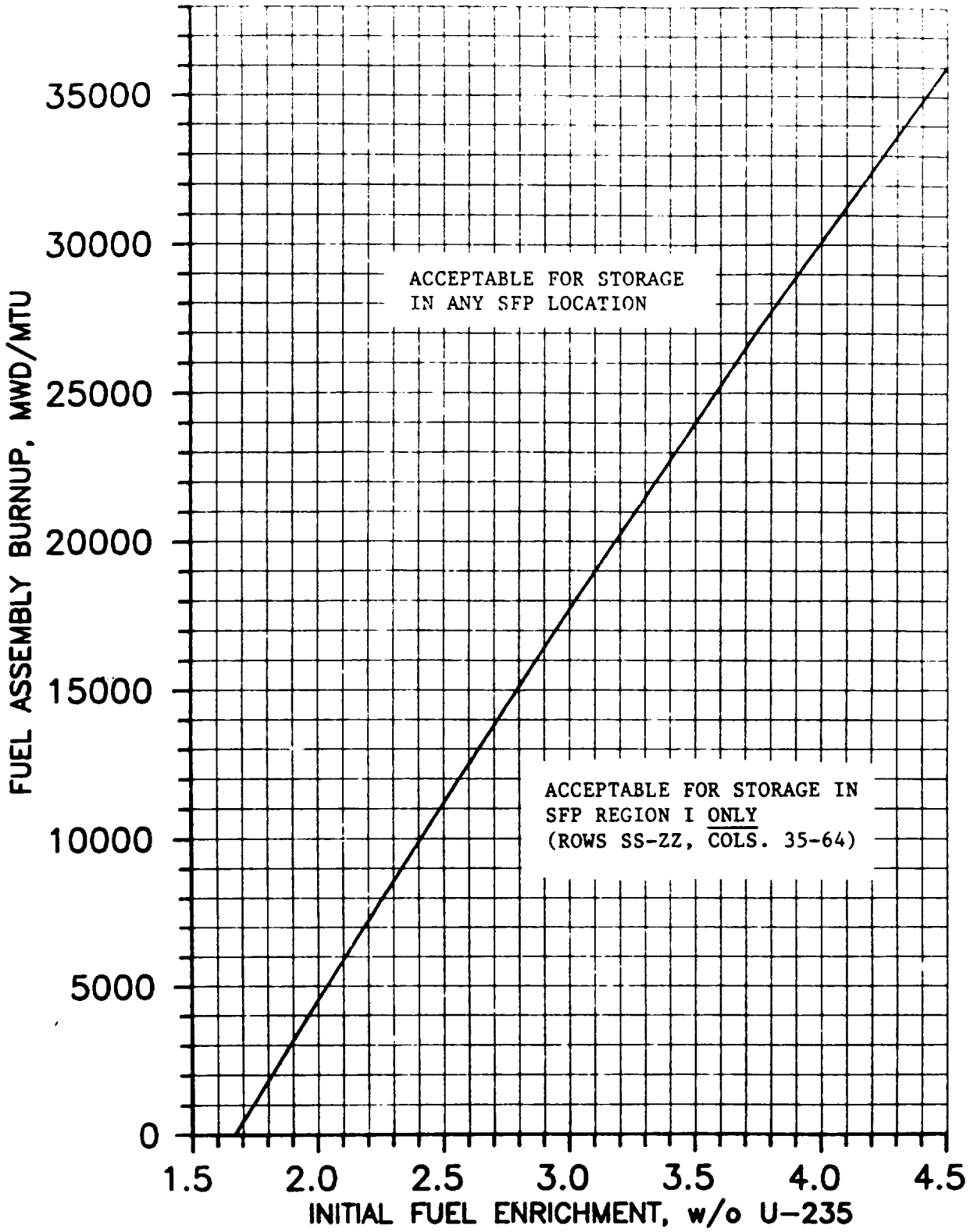

Figure 3.8-2

MINIMUM BURNUP FOR STORAGE OF FUEL IN MAX DENSITY SPENT FUEL PIT RACKS

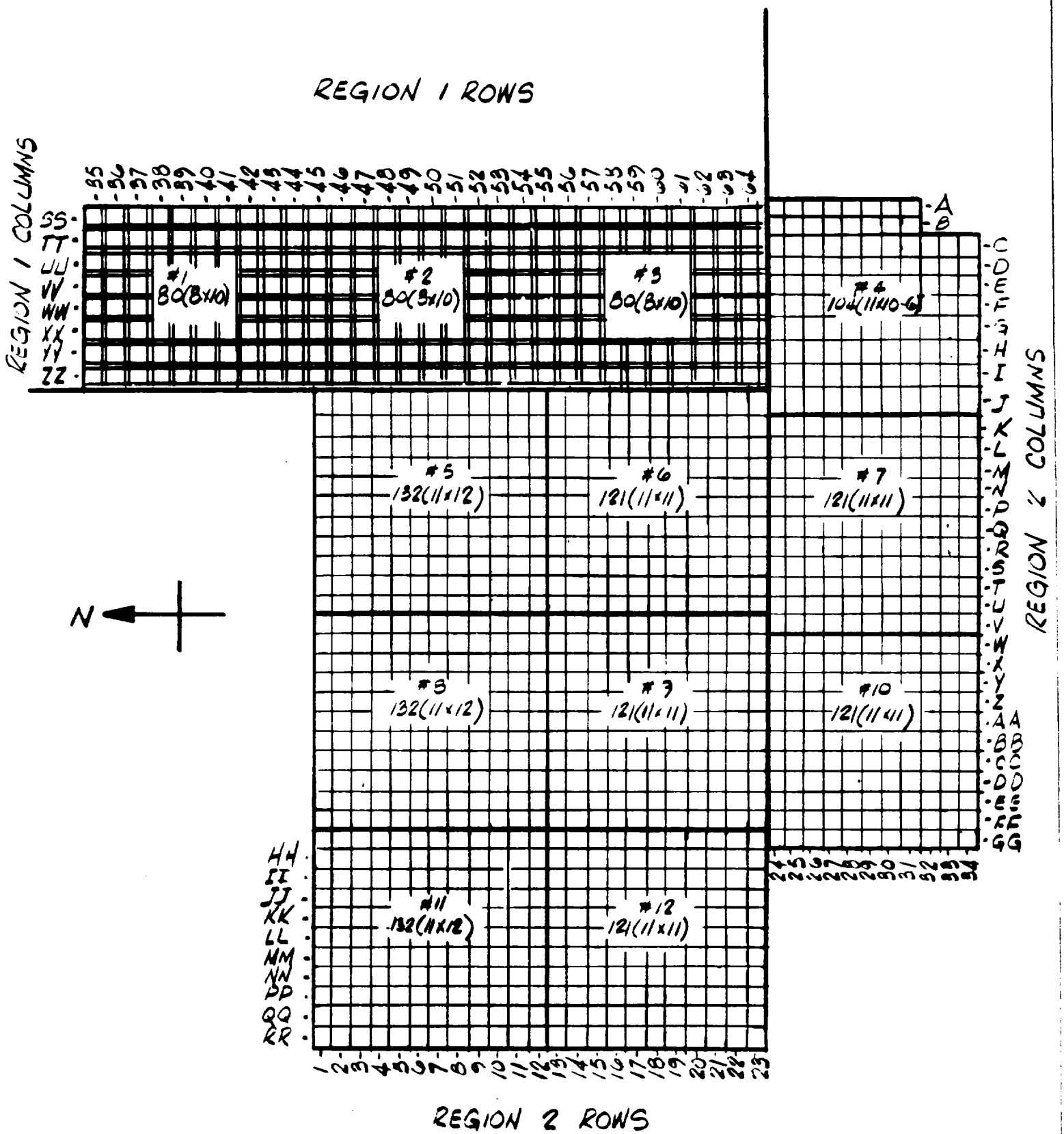

FIGURE 3.8-3

MAXIMUM DENSITY SPENT FUEL PIT (SFP) RACKS REGIONS AND INDEXING

5.3 REACTOR

Applicability

Applies to the reactor core, and reactor coolant system.

Objective

To define those design features which are essential in providing for safe system operations.

A. Reactor Core

1. The reactor core contains approximately 87 metric tons of uranium in the form of slightly enriched uranium dioxide pellets. The pellets are encapsulated in Zircaloy-4 tubing to form fuel rods. The reactor core is made up of 193 fuel assemblies. Each fuel assembly contains 204 fuel rods. (1)

2. The average enrichment of the initial core was a nominal 2.8 weight percent of U-235. Three fuel enrichments were used in the initial core. The highest enrichment was a nominal 3.3 weight percent of U-235. (2)

3. Reload fuel will be similar in design to the initial core. The enrichment of reload fuel will be no more than 4.5 weight percent of U-235.

4. Burnable poison rods were incorporated in the initial core. There were 1434 poison rods in the form of 8, 9, 12, 16, and 20-rod clusters, which are located in vacant rod cluster control guide tubes. (3) The burnable poison rods consist of borosilicate glass clad with stainless steel. (4) Burnable poison rods of an approved design may be used in reload cores for reactivity and/or power distribution control.

5.4 FUEL STORAGE

Applicability

Applies to the capacity and storage arrays of new and spent fuel.

Objective

To define those aspects of fuel storage relating to prevention of criticality in fuel storage areas.

Specification

1. The spent fuel pit structure is designed to withstand the anticipated earthquake loadings as a Class I structure. The spent fuel pit has a stainless steel liner to insure against loss of water.

2. The spent fuel storage racks are designed to assure $K_{eff} \leq 0.95$ if the assemblies are inserted in accordance with Technical Specification 3.8. The capacity of the spent fuel pit is 1345 assemblies with the maximum density storage racks installed. The new fuel storage racks are designed to assure $K_{eff} \leq 0.95$ and their capacity is 72 assemblies.

3. Whenever there is fuel in the pit (except in the initial core loading), the spent fuel storage is filled and borated to the concentration to match that used in the reactor cavity and refueling canal during refueling operations.

4. Fuel assemblies that contain more than 57.2 grams of uranium -235, or equivalvent, per axial centimeter of fuel assembly shall not be stored in the spent fuel pit.

UNITED STATES
NUCLEAR REGULATORY COMMISSION
WASHINGTON, D. C. 20555

POWER AUTHORITY OF THE STATE OF NEW YORK

DOCKET NO. 50-286

INDIAN POINT NUCLEAR GENERATING UNIT NO. 3

AMENDMENT TO FACILITY OPERATING LICENSE

Amendment No. 90
License No. DPR-64

1. The Nuclear Regulatory Commission (the Commission) has found that:

   A. The application for amendment by the Power Authority of the State of New York (the licensee) dated May 9, 1988, as supplemented June 9, 1988, December 20, 1988, May 26, 1989 and September 15, 1989, complies with the standards and requirements of the Atomic Energy Act of 1954, as amended (the Act) and the Commission's rules and regulations set forth in 10 CFR Chapter I;

   B. The facility will operate in conformity with the application, the provisions of the Act, and the rules and regulations of the Commission;

   C. There is reasonable assurance (i) that the activities authorized by this amendment can be conducted without endangering the health and safety of the public, and (ii) that such activities will be conducted in compliance with the Commission's regulations;

   D. The issuance of this amendment will not be inimical to the common defense and security or to the health and safety of the public; and

   E. The issuance of this amendment is in accordance with 10 CFR Part 51 of the Commission's regulations and all applicable requirements have been satisfied.

2. Accordingly, the license is amended by changes to the Technical Specifications as indicated in the attachment to this license amendment, and paragraph 2.C.(2) of Facility Operating License No. DPR-64 is hereby amended to read as follows:

(2) Technical Specifications

The Technical Specifications contained in Appendices A and B, as revised through Amendment No. 90 , are hereby incorporated in the license. The licensee shall operate the facility in accordance with the Technical Specifications.

3. This license amendment is effective as of the date of its issuance.

FOR THE NUCLEAR REGULATORY COMMISSION

Robert A. Capra

Robert A. Capra, Director
Project Directorate I-1
Division of Reactor Projects - I/II
Office of Nuclear Reactor Regulation

Attachment:
Changes to the Technical
Specifications

Date of Issuance: October 12, 1989

ATTACHMENT TO LICENSE AMENDMENT NO. 90

FACILITY OPERATING LICENSE NO. DPR-64

DOCKET NO. 50-286

Revise Appendix A as follows:

Remove Pages	Insert Pages
List of Figures	List of Figures
3.8-2	3.8-2
3.8-3	3.8-3
3.8-4	3.8-4
3.8-5	3.8-5
3.8-6	3.8-6
	3.8-7
	Figure 3.8-2
	Figure 3.8-3
5.3-1	5.3-1
5.4-1	5.4-1

LIST OF FIGURES

Title	Figure No.
Core Limits - Four Loop Operation	2.1-1
Maximum Permissible T_{cold} for First RCP Start (OPS Operable, Hottest SG Temp. > T_{cold})	3.1.A-1
Maximum Permissible RCS Pressure for RCP Start(s) with OPS Inoperable (SG Temp. > T_{cold} for additional pump starts, SG Temp. < T_{cold} for all pump starts)	3.1.A-2
RCS Pressure Limits for Low Temperature Operation	3.1.A-3
Maximum Pressure Limits for OPS Inoperable and First RCP Start (SG Temp. > T_{cold})	3.1.A-4
Pressurizer Level for OPS Inoperable and One (1) Charging Pump Energized	3.1.A-5
Pressurizer Level for OPS Inoperable and One (1) Safety Injection Pump and/or Three (3) Charging Pumps Energized	3.1.A-6
Reactor Coolant System Heatup Limitations	3.1-1
Reactor Coolant System Cooldown Limitations	3.1-2
Primary Coolant Specific Activity Limit vs. Percent of Rated Thermal Power	3.1-3
Gross Electrical Output - 1" HG Backpressure	3.4-1
Gross Electrical Output - 1.5" HG Backpressure	3.4-2
Limiting Fuel Burnup vs. Initial Enrichment	3.8-1
Minumum Burnup for Storage of Fuel in Max Density Spent Fuel Pit Racks	3.8-2
Maximum Density Spent Fuel Pit (SFP) Racks, Regions and Indexing	3.8-3
Required Shutdown Margin	3.10-1
Hot Channel Factor Normalized Operating Envelope	3.10-2
Rod Insertion Limits, 100 Step Overlap - Four Loop Operation	3.10-4
Steam Generator Primary Side Ultrasonic Test Sectors	4.2-1
Pressure/Temperature Limitations for Hydrostatic Leak Test	4.3-1

8. The containment vent and purge system, including the radiation monitors which initiate isolation, shall be tested and verified to be operable within 100 hours prior to refueling operations.

9. No movement of irradiated fuel in the reactor shall be made until the reactor has been subcritical for at least 145 hours. In addition, movement of fuel in the reactor before the reactor has been subcritical for equal to or greater than 365 hours will necessitate operation of the Containment Building Vent and Purge System through the HEPA filters and charcoal absorbers. For this case operability of the Containment Building Vent and Purge System shall be established in accordance with Section 4.13 of the Technical Specifications. In the event that more than one region of fuel (72 assemblies) is to be discharged from the reactor, those assemblies in excess of one region shall not be discharged before the interval of 267 hours has elapsed after shutdown.

10. Whenever movement of irradiated fuel is being made, the minimum water level in the area of movement shall be maintained 23 feet over the top of the reactor pressure vessel flange.

11. Hoists or cranes utilized in handling irradiated fuel shall be dead-load tested before movement begins. The load assumed by the hoists or cranes for this test must be equal to or greater than the maximum load to be assumed by the hoists or cranes during the refueling operation. A thorough visual inspection of the hoists or cranes shall be made after the deadload test and prior to fuel handling. A test of interlocks and overload cutoff devices on the manipulator shall also be performed.

12. The fuel storage building emergency ventilation system shall be operable whenever irradiated fuel is being handled within the fuel storage building. The emergency ventilation system may be inoperable when irradiated fuel is in the fuel storage building, provided irradiated fuel is not being handled and neither the spent fuel cask nor the cask crane are moved over the spent fuel pit during the period of inoperability.

13. To ensure redundant decay heat removal capability, at least two of the following requirements shall be met:

a. No. 31 residual heat removal pump and heat exchanger, together with their associated piping and valves are operable.

b. No. 32 residual heat removal pump and heat exchanger, together with their associated piping and valves are operable.

c. The water level in the refueling cavity above the top of the reactor vessel flange is equal to or greater than 23 feet.

B. If any of the specified limiting conditions for refueling are not met, refueling shall cease until the specified limits are met, and no operations which may increase the reactivity of the core shall be made.

C. During fuel handling and storage operations, the following conditions shall be met:

1. Radiation levels in the spent fuel storage area shall be monitored continuously whenever there is irradiated fuel stored therein. If the monitor is inoperable, a portable monitor may be used.

2. The spent fuel cask shall not be moved over any region of the spent fuel pit which contains irradiated fuel. Additionally, if the spent fuel pit contains irradiated fuel, no loads in excess of 2,000 pounds shall be moved over any region of the spent fuel pit. This prohibition does not apply to the movement of the existing high density or replacement maximum density spent fuel storage racks over the spent fuel pit during the storage rack replacement effort, provided that the fuel stored in the spent fuel pit has been subcritical for a minimum of 120 days.

3. During periods of spent fuel cask or fuel storage building cask crane movement over the spent fuel pit, or during periods of spent fuel movement in the spent fuel pit when the pit contains irradiated fuel, the pit shall be filled with borated water at a concentration of >1000 ppm.

4. Whenever movement of irradiated fuel in the spent fuel pit is being made, the minimum water level in the area of movement shall be maintained 23 feet over the top of irradiated fuel assemblies seated in the storage rack.

5. Hoists or cranes utilized in handling irradiated fuel shall be deadload tested before fuel movement begins. The load assumed by the hoists or cranes for this test must be equal to or greater than the maximum load to be assumed by the hoists or cranes during the fuel handling operation. A thorough visual inspection of the hoists or cranes shall be made after the deadload test prior to fuel handling.

6. The fuel storage building emergency ventilation system shall be operable whenever irradiated fuel is being handled within the fuel storage building. The emergency ventilation system may be inoperable when irradiated fuel is in the fuel storage building, provided irradiated fuel is not being handled and neither the spent fuel cask nor the cask crane are moved over the spent fuel pit during the periods of inoperability.

7. Fuel Storage in High Density Spent Fuel Racks Only:

   Fuel assemblies to be stored in the spent fuel pit can be categorized as either Category 1, 2 or 3 based on burnup and initial enrichment as specified in Figure 3.8-1. Category 2 fuel shall be loaded into the spent fuel pool storage locations in a checkerboard fashion with the intermediate storage locations containing Category 1 fuel, non-fuel materials or left empty. Unless restricted by the above, Category 1 or 3 fuel can be stored in any location in the spent fuel pool.

8. Fuel Storage in Maximum Density Spent Fuel Racks Only:

   Fuel assemblies of initial enrichment less than or equal to 4.5 w/o U-235 can be stored in Region 1 (rows SS-ZZ, columns 35-64) of the spent fuel storage racks. Fuel assemblies to be stored in Region 2 (rows A-RR, columns 1-34) of the spent fuel storage racks shall have a minimum burnup exposure as a function of initial enrichment as specified in Figure 3.8-2. The locations of Region 1 and 2 of the spent fuel storage racks are shown in Figure 3.8-3.

D. When any fuel assemblies are in the reactor vessel and the reactor vessel head bolts are less than fully tensioned, the boron concentration of all filled portions of the Reactor Coolant System and the refueling canal shall be maintained uniform and sufficient to ensure that the more restrictive of the following reactivity conditions is met; either:

   a. A shutdown margin greater than or equal to 5% $\Delta K/K$

   or

   b. A boron concentration of greater than or equal to 1900 ppm.

The required boron concentration will be verified by chemical analysis daily. With the requirements of the above specification not satisfied, immediately suspend all operations involving core alterations or positive reactivity changes and initiate boration to return to the more restrictive of the limits above.

Basis

The equipment and general procedures to be utilized during refueling, fuel handling, and storage are discussed in the FSAR. Detailed instructions, the above specified precautions, and the design of the fuel handling equipment incorporating built-in interlocks and safety features, provide assurance that no incident could occur during the refueling, fuel handling, reactor maintenance or storage operations that would result in a hazard to public health and safety.(1) Whenever changes are not being made in core geometry, one flux monitor is sufficient. This permits maintenance of the instrumentation. Continuous monitoring of radiation levels and neutron flux provides immediate indication of an unsafe condition. The residual heat removal pump is used to maintain a uniform boron concentration.

The shutdown margin indicated will keep the core subcritical. During refueling the reactor refueling cavity is filled with approximately 342,000 gallons of water from the refueling water storage tank with a boron concentration of 2000 ppm. Periodic checks of refueling water boron concentration and residual heat removal pump operation insure the proper shutdown margin. The requirement for direct communications allows the control room operator to inform the manipulator operator of any impending unsafe condition detected from the main control board indicators during fuel movement.

The minimum boron concentration of this water is the more restrictive of either 1900 ppm or else sufficient to maintain the reactor subcritical by at least 5% $\Delta K/K$ in the cold shutdown condition with all rods inserted. These limitations are consistent with the initial conditions assumed for the boron dilution incident in the safety analyses.

In addition to the above safeguards, interlocks are utilized during refueling to ensure safe handling. An excess weight interlock is provided on the lifting hoist to prevent movement of more than one fuel assembly at a time. The spent fuel transfer mechanism can accommodate only one fuel assembly at a time.

The 145-hour decay time following the subcritical condition and the 23 feet of water above the top of the reactor pressure vessel flange bounds the assumptions used in the dose calculation for the fuel-handling accident. The 145-hour decay time is based on limiting calculated worst-case spent fuel pool temperature rise to 150° during normal refueling conditions.

Amendment ~~13~~, ~~20~~, ~~39~~, ~~69~~, ~~70~~, ~~72~~, ~~88~~, 90

The waiting time of 267 hours required following plant shutdown before unloading more than one region of fuel from the reactor assures that the maximum pool water temperature will be within design objectives as stated in the FSAR. The calculations confirming this are based on an inlet river temperature of 87.8°F, service water flow to the component cooling heat exchangers of 7000 gpm (FSAR) and component cooling flow to the Spent Fuel Pit heat exchanger of 2800 gpm (FSAR).

The requirement for the fuel storage building emergency ventilation system to be operable is established in accordance with standard testing requirements to assure that the system will function to reduce the offsite dose to within acceptable limits in the event of a fuel-handling accident. The fuel storage building emergency ventilation system must be operable whenever irradiated fuel has had a continuous 45 day decay period, the fuel storage building emergency ventilation system is not technically necessary, even though the system is required to be operable during all fuel handling operations. Fuel Storage Building isolation is actuated upon receipt of a signal from the area high activity alarm or by manual operation. The emergency ventilation bypass assembly is manually isolated, using manual isolation devices, prior to movement of any irradiated fuel. This ensures that all air flow is directed through the emergency ventilation HEPA filters and charcoal adsorbers. The ventilation system is tested prior to all fuel handling activities to ensure the proper operation of the filtration system.

When fuel in the reactor is moved before the reactor has been subcritical for at least 365 hours, the limitations on the containment vent and purge system ensure that all radioactive material released from an irradiated fuel assembly will be filtered through the HEPA filters and charcoal adsorbers prior to discharge to the atmosphere.

The limit to have at least two means of decay heat removal operable ensures that a single failure of the operating RHR System will not result in a total loss of decay heat removal capability. With the reactor head removed and 23 feet of water above the vessel flange, a large heat sink is available for core cooling. Thus, in the event of a single component failure, adequate time is provided to initiate diverse methods to cool the core.

The minimum spent fuel pit boron concentration and the restriction of the movement of the spent fuel cask over irradiated fuel were specified in order to minimize the consequences of an unlikely sideways cask drop.

Fuel assemblies whose initial enrichment is greater than 3.5 w/o U-235 but less than or equal to 4.3 w/o can be stored in the spent fuel pool providing they are placed in a checkerboard array with fuel whose initial enrichment and burnup are sufficient to ensure that K_{eff} is less than 0.95 with no soluble boron present. This is ensured by categorizing the fuel whose initial enrichment is greater than 3.5 w/o U-235 but less than or

equal to 4.3 w/o and whose burnup is below the curve of Figure 3.8-1 as Category 2. This fuel can be stored by checkerboarding with Category 1 fuel which is defined as fuel whose initial enrichment and burnup place it on or above and to the left of the curve in Figure 3.8-1. Category 3 fuel which is less than or equal to 3.5 w/o U-235 and below the curve of Figure 3.8-1 cannot be used in the checkerboard with Category 2 fuel. Any Category 1 or 3 fuel can continue to be stored on a repeating x-y array with other non-Category 2 fuel. For the purpose of storing Category 2 fuel, non-fuel material or empty locations can be utilized in place of Category 1 fuel.

As shown in Figure 3.8-3 the maximum density spent fuel storage racks consist of two regions: Region 1 (rows SS - ZZ, columns 35-64) and Region 2 (rows A - RR, columns 1-34). Fuel assemblies of initial enrichment of less than or equal to 4.5 w/o U-235 may be stored in Region 1 of the replacement maximum density spent fuel storage racks. Fuel assemblies to be stored in Region 2 of the replacement racks must have a minimum burnup exposure as a function of initial enrichment as specified in Figure 3.8-2. Administrative controls will provide verification that each fuel assembly to be placed in Region 2 of the replacement racks satisfies the burnup criterion.

When the spent fuel cask is being placed in or removed from its position in the spent fuel pit, mechanical stops incorporated in the bridge rails make it impossible for the bridge of the crane to travel further north than a point directly over the spot reserved for the cask in the pit. Thus, it will be possible to handle the spent fuel cask with the 40-ton hook and to move new fuel to the new fuel elevator with a 5-ton hook, but it will be impossible to carry any object over the spent fuel storage area with either the 40 or 5-ton hook of the fuel storage building crane.

During the spent fuel storage rack replacement effort, the mechanical stops incorporated in the crane bridge rails will be removed. However, adminsitrative controls will preclude the movement of the existing high density or replacement maximum density racks over spent fuel assemblies.

Dead load tests and visual inspection of the hoists and cranes before handling irradiated fuel provide assurance that the hoists or cranes are capable of proper operation.

<u>References</u>

(1) FSAR - Section 9.5.2

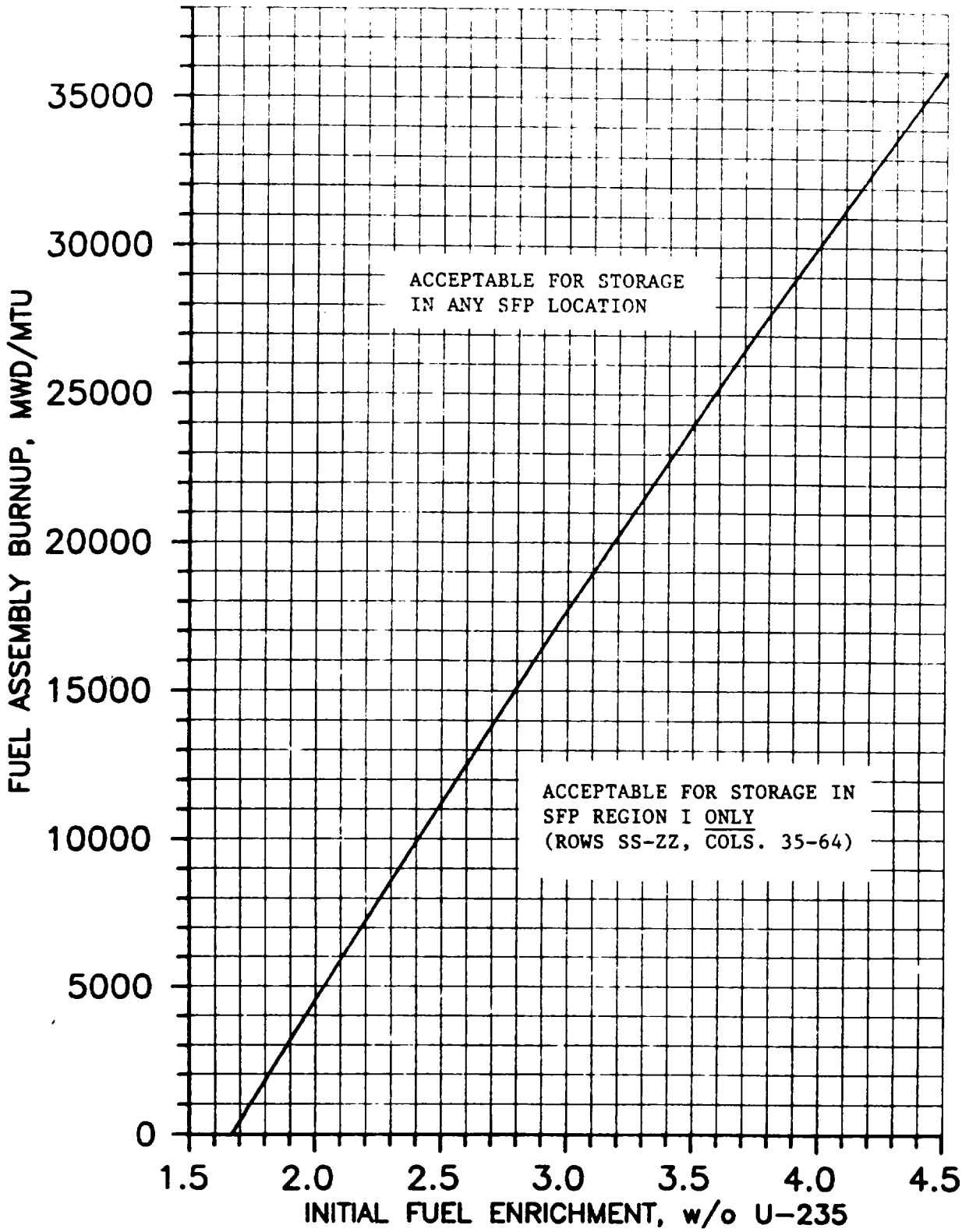

Figure 3.8-2

MINIMUM BURNUP FOR STORAGE OF FUEL IN MAX DENSITY SPENT FUEL PIT RACKS

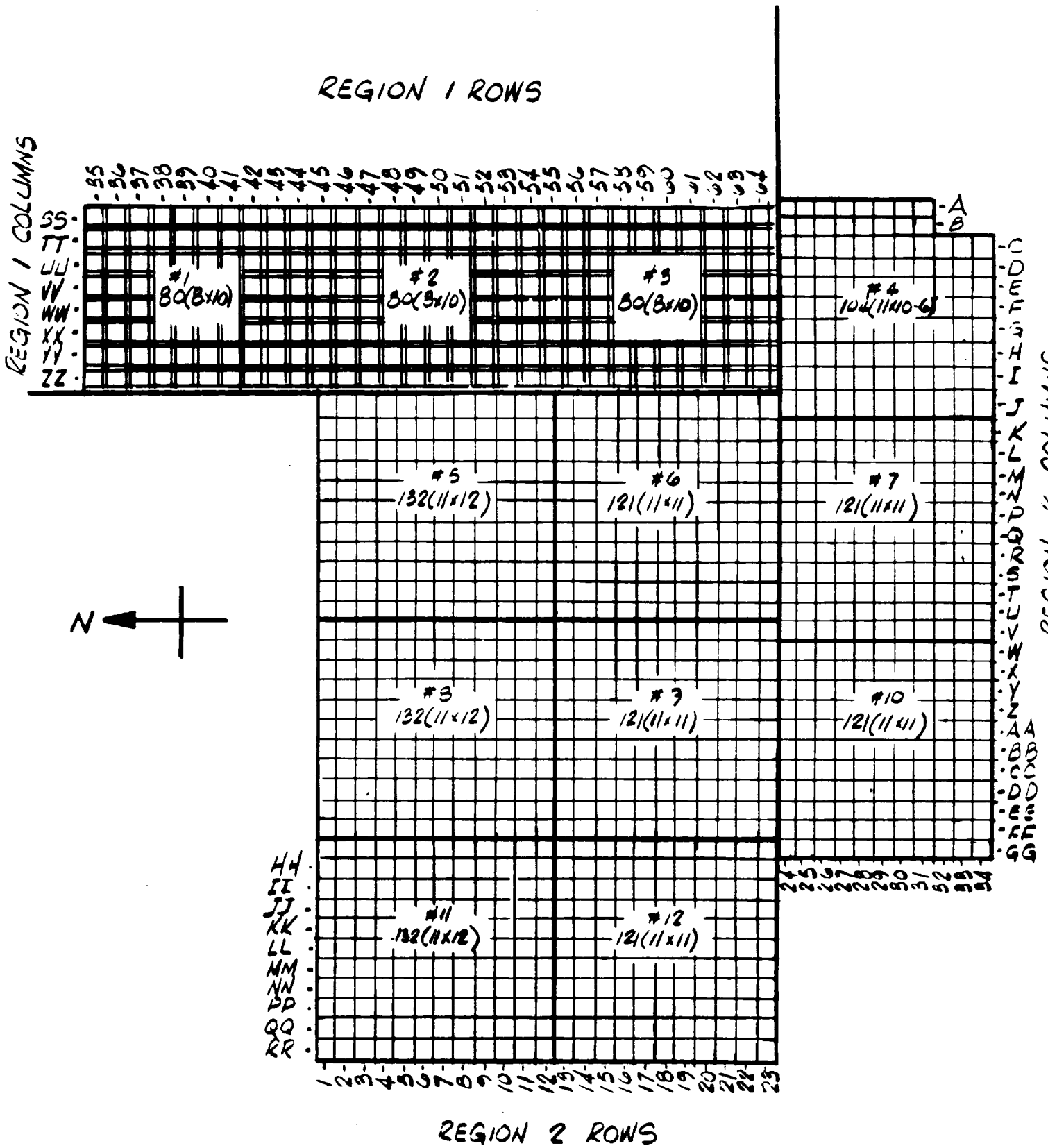

FIGURE 3.8-3
MAXIMUM DENSITY SPENT FUEL PIT (SFP) RACKS
REGIONS AND INDEXING

5.3 REACTOR

Applicability

Applies to the reactor core, and reactor coolant system.

Objective

To define those design features which are essential in providing for safe system operations.

A. Reactor Core

1. The reactor core contains approximately 87 metric tons of uranium in the form of slightly enriched uranium dioxide pellets. The pellets are encapsulated in Zircaloy-4 tubing to form fuel rods. The reactor core is made up of 193 fuel assemblies. Each fuel assembly contains 204 fuel rods. (1)

2. The average enrichment of the initial core was a nominal 2.8 weight percent of U-235. Three fuel enrichments were used in the initial core. The highest enrichment was a nominal 3.3 weight percent of U-235. (2)

3. Reload fuel will be similar in design to the initial core. The enrichment of reload fuel will be no more than 4.5 weight percent of U-235.

4. Burnable poison rods were incorporated in the initial core. There were 1434 poison rods in the form of 8, 9, 12, 16, and 20-rod clusters, which are located in vacant rod cluster control guide tubes. (3) The burnable poison rods consist of borosilicate glass clad with stainless steel. (4) Burnable poison rods of an approved design may be used in reload cores for reactivity and/or power distribution control.

5.4 FUEL STORAGE

Applicability

Applies to the capacity and storage arrays of new and spent fuel.

Objective

To define those aspects of fuel storage relating to prevention of criticality in fuel storage areas.

Specification

1. The spent fuel pit structure is designed to withstand the anticipated earthquake loadings as a Class I structure. The spent fuel pit has a stainless steel liner to insure against loss of water.

2. The spent fuel storage racks are designed to assure $K_{eff} \leq 0.95$ if the assemblies are inserted in accordance with Technical Specification 3.8. The capacity of the spent fuel pit is 1345 assemblies with the maximum density storage racks installed. The new fuel storage racks are designed to assure $K_{eff} \leq 0.95$ and their capacity is 72 assemblies.

3. Whenever there is fuel in the pit (except in the initial core loading), the spent fuel storage is filled and borated to the concentration to match that used in the reactor cavity and refueling canal during refueling operations.

4. Fuel assemblies that contain more than 57.2 grams of uranium -235, or equivalvent, per axial centimeter of fuel assembly shall not be stored in the spent fuel pit.

UNITED STATES
NUCLEAR REGULATORY COMMISSION
WASHINGTON, D. C. 20555

SAFETY EVALUATION BY THE OFFICE OF NUCLEAR REACTOR REGULATION

RELATED TO AMENDMENT NO. 90 TO FACILITY OPERATING LICENSE NO. DPR-64

POWER AUTHORITY OF THE STATE OF NEW YORK

INDIAN POINT NUCLEAR GENERATING STATION UNIT NO. 3

DOCKET NO. 50-286

1.0 INTRODUCTION

1.1 Licensee Submittal and Staff Review

By letter dated May 9, 1988, as supplemented June 9, 1988, December 20, 1988, May 26, 1989 and September 15, 1989, the Power Authority of the State of New York (the licensee) requested a change to Facility Operating License DPR-64 which would revise Sections 3.8, 5.3 and 5.4 of the Technical Specifications for the Indian Point 3 Nuclear Generating Station Unit No. 3 (IP3). The proposed changes would allow the replacement of the existing high density spent fuel storage racks with maximum density storage racks. These changes would also permit the reload of fuel assemblies with enrichments up to 4.5 weight percent U-235 and the storage of such assemblies prior to and subsequent to loading in the reactor. The maximum density storage racks would increase the current storage capacity of 840 fuel assemblies to 1345 fuel assemblies.

The May 9, 1988 request for the amendment was noticed in the Federal Register on July 5, 1988 (54 FR 25222) as a Consideration of Issuance of Amendment to Facility Operating License and Opportunity for Hearing.

The licensee's letter dated June 9, 1988 transmitted Technical Specification figures which were inadvertently omitted from the May 9, 1988 letter. These figures did not provide any information that was not available in the May 9, 1988 submittal. Letters dated December 20, 1988, May 26, 1989 and September 15, 1989 provided additional information.

1.2 Description

The amendment would authorize the licensee to increase the spent fuel pool storage capacity from 840 to 1345 fuel assemblies.

8910200128 891012
PDR ADOCK 05000286
P PDC

The licensee provided the following description:

"The existing high density storage racks are arranged in twelve modules. In seven of the twelve existing modules, the center-to-center spacing of the fuel cells is 12 inches in either direction; in five of the twelve modules, the center-to-center spacing of the fuel cells is 12 inches in one direction and 11.25 inches in the other direction. The existing storage cells are formed from a type 304 stainless steel sheet of 0.150 inch minimum thickness with borated stainless steel plates welded to the cell at specified locations.

The replacement storage rack design is a free-standing welded honeycomb array of stainless steel boxes which has no grid frame structure. The storage racks are arranged and categorized in two regions based on fuel assembly enrichment and burnup. The nominal pitch for Region I and Region II storage cells is 9.075 inches. All storage cells are bounded on four sides by boral poison sheets, except on the periphery of the pool rack array.

Each of the replacement maximum density racks will be supported and leveled on four screw pedestals which bear directly on the pool floor. These free-standing racks are free to move horizontally. However, with only a 0.2 friction factor, there is no wall impact even assuming five (5) OBE and one (1) SSE earthquake events all added up in the same direction. Additionally, there is no rack-to-rack impact since the maximum density racks are designed to be installed with essentially no gap between the racks. The strong hydrodynamic coupling between the racks causes the racks to move together even when a full and empty rack are adjacent to each other. The seismic analysis (Reference 1) shows that rack-to-rack impact will not occur through the full range of realistically expected gaps between installed racks.

The maximum density storage racks are designed for a fuel enrichment of up to 4.5 w/o U-235, which is slightly higher than the currently allowable maximum of 4.3 w/o U-235. This application also seeks to increase the maximum fuel enrichment allowed in the spent fuel pool and the reactor core from 4.3 w/o to 4.5 w/o U-235."

2.0 EVALUATION

2.1 Criticality Analysis

2.1.1 Calculation Methods

The calculation of the effective multiplication factor, k_{eff} makes use of the PDQ-7 two-dimensional, four energy group, diffusion theory computer code with neutron cross sections generated by the LEOPARD code. These codes were benchmarked by Pickard, Lowe and Garrick, Inc. (PLG) against a series of critical experiments with characteristics similar to the Indian Point 3 spent fuel pool racks. These comparisons resulted in a model bias of +0.0067 and a 95/95 probability/confidence uncertainty of $\pm$0.0027 for the Region I racks and a model bias of +0.0057 and a 95/95 uncertainty of $\pm$0.0086 for the Region II racks.

In order to calculate the criterion for acceptable burnup for storage in Region II, calculations were made for fuel of several different initial enrichments and, at each enrichment, a limiting reactivity value was established which included an additional factor for uncertainty in the burnup analysis. Burnup values which yielded the limiting reactivity values were then determined for each enrichment from which the acceptable burnup domain for storage in Region II, as shown in Technical Specification Figure 3.8-2, was obtained. The staff finds this procedure acceptable.

2.1.2 Treatment of Uncertainties

Since the basic calculational model assumed that the entire active fuel length is shielded by boral, a bias was incorporated to account for the 5.5 inches of active fuel uncovered at the top and bottom of each fuel assembly due to the actual boral panel length. In addition, variations in manufacturing tolerances on stainless steel wall thickness, boral thickness, boral panel length, fuel box dimensions, boral box dimensions, and fuel pellet density were incorporated. The reactivity effects of pool temperature, water density, and fuel position uncertainty were found to be negative and were ignored for conservatism.

For the Region I analysis, the total uncertainty is the statistical combination of the calculational uncertainty and the manufacturing and mechanical uncertainties. In the Region II analysis, the same uncertainties as well as an uncertainty due to the burnup analysis are considered and combined statistically.

The staff concludes that the appropriate uncertainties have been considered and have been calculated in an acceptable manner. In addition, these uncertainties were determined at least at a 95% probability 95% confidence level, thereby meeting the NRC requirements, and are acceptable.

2.1.3 Results of Analysis

For Region I, the rack multiplication factor is calculated to be 0.9207, including uncertainties at the 95/95 probability/confidence level, when fuel having an enrichment of 4.5 weight percent is stored therein. Although the pool is normally flooded with water borated to at least 1000 ppm, unborated water was conservatively assumed in the analysis.

For Region 2, the rack multiplication factor is calculated to be 0.9479 for the most reactive irradiated fuel permitted to be stored in the racks, i.e., fuel with the minimum burnup permitted for each initial enrichment as shown in Figure 3.8-2. The design will accept fuel of 4.5 weight percent U-235 initial enrichment irradiated to 36,000 MWD/MTU. The analysis of the Region 2 racks also assumed full flooding by unborated water.

Therefore, the results of the criticality analyses meet the staff's acceptance criterion of k_{eff} no greater than 0.95 including all uncertainties at the 95/95 probability/confidence level.

2.1.4 Accident Analyses

Most abnormal storage conditions will not result in an increase in the k_{eff} of the racks. For example, loss of a cooling system will result in a decrease in the k_{eff} value since reactivity decreases with decreasing water density. It is possible to postulate events, such as an inadvertent misplacement of a fresh fuel assembly either into a Region II storage cell or outside and adjacent to a rack module, which could lead to an increase in pool reactivity. However, for such events credit may be taken for the significant negative reactivity effect of at least 1000 ppm of boron in the spent fuel pool required by the Technical Specifications during periods of spent fuel movement. The reduction in the k_{eff} value caused by the boron more than offsets the reactivity addition caused by credible accidents.

2.1.5 Fresh Fuel Storage Racks

The proposed Technical Specification change would allow an increase in U-235 enrichment from 4.3 to 4.5 weight percent for both reload fuel in the core and in the spent fuel pool. Therefore, the licensee was requested to justify that 4.5 weight percent fuel would meet the NRC acceptance criterion of k_{eff} less than 0.95 fully flooded for the 72 new (unirradiated) fuel racks as specified in Technical Specifications 5.4.2. In response, the licensee submitted a criticality analysis of the Indian Point Unit 3 fresh fuel racks. The analysis of k_{eff} of the fresh fuel storage racks as a function of moderator density was performed with the KENO code which was used and approved for the original analysis of the spent fuel racks. Its use for the fresh fuel racks is also acceptable. The results of the analysis showed that the maximum value of k_{eff} occurred at full density water and was less than 0.95 including all uncertainties. This meets the staff's criterion for k_{eff} and is acceptable.

2.1.6 Technical Specification Changes

The following Technical Specification (TS) changes have been made as a result of the proposed spent fuel pool modifications. The staff finds these changes acceptable.

1. TS 3.8.C.8 specifies the maximum enrichment of fuel which can be stored in Region II and references the burnup versus initial enrichment required by Figure 3.8-2 for storage in Region 2 of the maximum density fuel racks.

2. TS 5.3.A.3 limits the enrichment of reload fuel to no more than 4.5 weight percent U-235.

3. TS 5.4.2 specifies the increase in the spent fuel pool storage capacity to 1345 assemblies.

4. TS 5.4.4 limits the enrichment of fuel which can be stored in the spent fuel pit to no more than 57.2 grams of U-235, or equivalent, per axial centimeter of fuel assembly.

2.1.7 Conclusion

Based on the review described above, the staff finds the criticality aspects of the design of the Indian Point 3 spent fuel racks to be acceptable and meet

the requirements of General Design Criterion 62 for the prevention of criticality in fuel storage and handling. The staff concludes that fuel from Unit 3 may be safely stored in Region 1 provided that the enrichment does not exceed 4.5 weight percent U-235. Any of these fuel assemblies may also be stored in Region 2 provided it meets the burnup and enrichment limits specified in Figure 3.8-2 of the Indian Point 3 Technical Specifications. The staff also concludes that fresh fuel assemblies having initial enrichments up to 4.5 weight percent U-235 may be safely stored in the fresh fuel storage racks. The acceptability of this fuel in the actual Indian Point 3 core, of course, will be evaluated during each reload analysis by verifying that all of the Technical Specification limits affected by fuel enrichment are not violated.

3.0 MATERIAL COMPATIBILITY AND CHEMICAL STABILITY

3.1 Discussion

Nuclear reactor plants provide storage facilities or pools for the wet storage of spent fuel assemblies. The safety function of the spent fuel storage pools is to maintain the spent fuel assemblies in a sub-critical array during all credible storage conditions. The staff has reviewed the compatibility and chemical stability of the materials (except the fuel assemblies) wetted by the pool water, in accordance with Section 9.1.2 of the Standard Review Plan (NUREG-0800, July 1981).

The spent fuel storage pool at the Indian Point Station, Unit 3, contains oxygen-saturated demineralized water which has a nominal concentration of 1000 parts per million (ppm) of boron. The pool is lined with stainless steel. The principal construction materials for the proposed new racks in the spent fuel storage pool are Type 304L austenitic stainless steel for structure and Boral for neutron absorption. The racks are interconnected honeycomb arrays of square stainless steel boxes forming individual cells for fuel storage. All storage cells have Boral sheets on four sides except the sides facing the pool walls.

The licensee has proposed a surveillance program to monitor the long-term stability and mechanical integrity of the Boral panels. Two full-length Boral sheets and two strings of shorter Boral sheets will be installed in the fuel storage pool. The full-length specimens will be visually examined periodically. The short-length specimens will be examined for physical properties and neutron transmission. The initial surveillance will be performed after an exposure of five years or less. Based on the results of the initial surveillance, the schedule for future surveillance will be determined. No corrective action is proposed in the event degraded Boral panels are found.

3.2 Evaluation

The stainless steel in the storage pool liners and rack assemblies is compatible with the oxygen-saturated borated water and radiation environment of the spent fuel pool. In this environment, corrosion of Type 304L stainless

steel is not expected to exceed a rate of 6×10^{-7} inch per year (E. G. Brush and W. L. Pearl, "Corrosion and Corrosion Produce Release in Neutral Feedwater," Corrosion, Vol. 28, p. 129, April 1972). This corrosion rate is negligible for even the thinnest stainless steel walls in the rack assemblies. Contact corrosion or galvanic attack between the stainless steel in the pool liners or rack assemblies and the Inconel/Zircaloy in the fuel assemblies to be stored will not be significant, because all these materials are protected by passivating oxide films.

Boral has been used as a neutron absorbing material in the spent fuel storage pools of many nuclear power plants. Boral sheets consist of a baked matrix of boron carbide and aluminum Type 1100 alloy, clad on both sides by aluminum Type 1100 alloy. The nominal thickness of the Boral sheets used at the Indian Point Station is 0.075 inch. The aluminum cladding prevents direct contact of the matrix with water in the spent fuel pool, except for the outer edges of the Boral panels.

The wettable amount of boron carbide matrix at the outer edges of Boral sheets is less than one percent of the total boron carbide contained therein (Brooks and Perkins, Inc., Report 624, "BORAL Produce Performance," 1987). The boron carbide in Boral is allowed to contain, by the ASTM specification C750-80, up to three percent soluble boron oxide. Thus, the maximum leachability of boron carbide is 0.03 percent. This leachability would not significantly degrade the overall physical integrity of Boral sheets. Tests conducted at the University of Michigan showed no leachable halogen from irradiated Boral (ibid).

The general corrosion rate of aluminum similar to Type 1100 alloy in water of pH 7 at a temperature of 125°C (257°F) has been measured to be 1.5×10^{-4} mils per day or 2.2 mils in 40 years (J. E. Draley and W. E. Ruther, Argonne National Laboratory Report ANL-5001, February 1953). The weight loss rate due to galvanic corrosion of aluminum coupled with stainless steel Type 304 in water of pH 5.0 at a temperature of 100°C (212°F) was determined to be 0.1 to 0.2 mil per year (Brooks and Perkins, Inc., Report 624, "BORAL Produce Performance," 1987). Such corrosion rates for the aluminum in Boral are negligible for the designed lifetime of the spent fuel pool.

Irradiation of Boral plates in dry air, distilled water, and a solution of 2000 ppm boron at a gamma radiation flux of 7×10^{7} rad per hour, thermal neutron flux of 1.1×10^{13} neutrons/cm^2-sec, and fast neutron flux of 1.1×10^{11} neutrons/cm^2-sec for up to 14290 hours, showed no detectable gas evolution from the Boral (R. R. Burn and G. Blessing, Transactions of the American Nuclear Society, Volume 32, Supplement 1, pp. 48-49, 1979). Irradiation of Boral matrix material with a cumulative exposure of 4×10^{16} thermal neutrons/cm^2, 1.2×10^{14} epithermal neutrons/cm^2, 5.4×10^{15} fast neutrons/cm^2, and 1.5×10^{9} rad gamma rays resulted in no detectable gas evolution (Brooks and Perkins, Inc., Report 578, "The Suitability of Brooks & Perkins Spent Fuel Storage Module for Use in PWR Storage Pool," July 7, 1978). Calculatons (ibid) of helium generation from nuclear reaction of

Boron-10 with neutrons in a typical Boral matrix indicated a potential pressure rise of 4.6×10^{-5} atmosphere (7×10^{-3} pounds per square inch) over a period of 40 years. Such a pressure build-up is insignificant and should not affect the physical integrity of the Boral sheets.

3.3 Conclusions

Based on the above discussion, the staff concludes that the corrosion of the spent fuel pool components due to the pool environment should be of little significance during the life of the facility. Components in the spent fuel storage pool are constructed of alloys which have a low differential galvanic potential between them and have a high resistance to general corrosion, localized corrosion, and galvanic corrosion.

The staff further concludes that the environmental compatibility of the materials used in the spent fuel storage pool is adequate based on the test data cited above and actual service experience at operating reactor facilities.

The staff has reviewed the proposed surveillance program for monitoring the Boral in the spent fuel storage pool and concludes that the program can reveal deterioration that might lead to loss of neutron absorbing capability during the life of the spent fuel storage racks. However, if a significant loss of neutron absorbing capability is found in any Boral panel, the licensee should take corrective actions such as replacement of the rack module having the degraded Boral panel or restriction of use of the affected cell for fuel storage.

The staff finds that the proposed monitoring program and the selection of appropriate materials of construction by the licensee meet the requirements of 10 CFR 50, Appendix A, General Design Criterion 61 regarding the capability to permit appropriate periodic inspection and testing of components, and General Design Criterion 62 regarding prevention of criticality by the use of boron poison and by maintaining structural integrity of components, and are, therefore, acceptable.

4.0 STRUCTURAL DESIGN

4.1 Description

This evaluation addresses the adequacy of the structural aspects of the proposed application. The Brookhaven National Laboratory (BNL) assisted the staff in reviewing various analyses and responses submitted by the licensee, and in auditing the methodology and sample calculations. Attached Appendix A is the technical evaluation report (TER) developed by BNL. The staff accepts the findings and conclusions of the TER by incorporating the TER as a part of this evaluation.

The spent fuel pool (SFP) including the fuel transfer canal is a rectangular reinforced concrete structure, 49 ft. 3 in. by 48 ft. 6 in., located in the fuel storage building. The SFP is separated from the fuel transfer canal by a

5 ft. thick reinforced concrete wall. The SFP and the transfer canal are surrounded by 6 ft. 3 in. reinforced concrete walls. The floor of the SFP is a reinforced concrete mat, 3 ft. 7 in. thick supported on a bedrock. The SFP walls and floor are lined with 1/4 in. thick stainless steel liner plate. The leak detection system consists of a network of 3 in. by 1½ in., 7 gage, ASTM A36 tubings installed at the liner seam welds. Any water leaking through the liner could be collected through the 1/2 in. diameter holes in the tubings and be transported to a leak detection drain and to a sump. The nominal depth of water in the pool is 39 ft. 3/4 in.

The proposed reracking will consist of 3 Region I racks (used for freshly discharged spent fuel), and nine Region II racks (used for older spent fuel). The spent fuel storage rack design is a welded honeycomb array of stainless steel boxes. Each cell has a welded-in bottom plate to support the fuel assembly. All storage cells are bounded on four sides by Boral poison sheets, except on the periphery of the pool rack array. The individual cells are 8.83 in. square (internal dimensions), and 0.085 in. thickness, fabricated from ASTM A-240, Type 304 stainless steel material. Each rack is supported and leveled on four screw pedestals which bear directly on the pool floor plate or the bridge plates. A more detailed description of the rack is provided in Appendix A.

The proposed application is for the storage of a single fuel assembly in each storage location of the high density racks.

4.2 Evaluation

The primary areas of review associated with the proposed application are focused towards assuring the structural integrity of the fuel, fuel cells, rack modules, and the spent fuel pool floor and walls under the postulated loads (Appendix D of SRP 3.8.4) and fuel handling accidents. The major areas of concern and their resolutions are outlined in the following paragraphs.

4.2.1 Fuel Handling Building and Spent Fuel Storage Pool

The Fuel Handling Building analysis and design had been reviewed and accepted during the initial licensing stages. The pool floor slab and walls were reanalyzed to account for the added load of the fuel, the racks and the associated impact loads. The floor slab elevation is 54 ft. 7¼ in. The original licensee's reanalysis did not adequately consider the impact loads resulting from rack movements under a postulated seismic event. The later reanalysis included these additional loads together with the hydrodynamic loads resulting from the rack movements. The stresses in the concrete and reinforcing steel at critical sections are found to be within the acceptable criteria. A detailed evaluation of the affected spent fuel components is provided in Section 4.6 of Appendix A.

4.2.2 High Density Racks

The seismic analysis of the free-standing racks in the licensing report (dated May 9, 1988) was based on the two dimensional single rack seismic analyses for two horizontal directions and the equivalent static loads obtained from the vertical response spectra. The resulting co-directional loads of displacements were combined using the square root of the sum of the squares method. This method may provide bounding loads. However, it has been shown in prior licensing reviews that it would not be able to simulate the potential displacements (and resulting impact, if any) of the free standing rack system. Later, the licensee performed a number of multiple-rack analyses with the two components of earthquake acting simultaneously, and considering the bounding coefficients of friction of 0.2 and 0.8. The licensee also performed bounding analyses to demonstrate the adequacy of cell walls under potential impact between the racks. None of the analyses showed impact with the SFP walls. The results of the latter analyses have been used in assuring the adequacy of the rack system.

Major components of the rack are evaluated for the maximum stresses compared against the stresses allowable by the criteria in Appendix D of Standard Review Plan 3.8.4. A minimum ratio of actual stresses to allowables was found to be 1.07 for the external threads in the pedestal shaft.

The fuel rack system was also evaluated for the inadvertent drop of a fuel assembly during fuel handling operation. Two critical cases of fuel assembly drop were evaluated; (1) a straight drop of a fuel assembly on the top of the rack structure, (2) a straight drop of a fuel assembly into the cell of the rack above the top of the rack. Energy balance approach with conservative assumptions indicated that in case (1), the large plastic deformation would be limited to the rack module above the active fuel region, and in case (2), the liner plate would not be perforated. Such deformations are acceptable under this type of accident. A detailed evaluation of the analysis of high density racks is provided in Sections 4.1 to 4.5 of Appendix A.

4.3 Conclusion

Based on its evaluation of the licensee's submittal, the supplementary information provided by the licensee, discussion with the licensee at meetings, and information audited by the staff and its consultant, the staff concludes that the licensee's structural analyses and design of the spent fuel rack modules and the spent fuel pool are in compliance with the acceptance criteria set forth in the FSAR and are consistent with the current licensing practice, and, therefore, are acceptable.

It is recommended that the licensee develop walkdown procedures to be implemented after a seismic event equivalent to or exceeding the Operating Basis Earthquake (OBE). The walkdown should include the inspection of rack modules, their displacements, and assessment of damage (if any) to adjoining structures and components.

5.0 SPENT FUEL POOL COOLING AND LOAD HANDLING

5.1 Spent Fuel Pool Cooling

The licensee proposed to revise TS Section 5.4.2, in part, to read: "...The capacity of the spent fuel pit is 1345 assemblies with the maximum density storage racks installed..." The following is our evaluation of this proposed change as it relates to spent fuel pool cooling.

The spent fuel pool cooling system consists of two pumps (main and standby), heat exchangers, filters, demineralizer, piping and associated valves and instrumentation. The operating pump draws water from the pool, circulates it through the heat exchanger and returns it to the pool. The heat exchanger is cooled by the component cooling water system. In the event of a failure of the spent fuel pool pump, the standby pump can be put into operation immediately from a local startup push button station. The spent fuel pool cooling system connections to the pool are located in such a manner that the pool cannot be either gravity-drained or inadvertently drained.

The licensee indicated that the major component of the heat load to the pool is from the recently discharged assemblies. The contribution to the total heat load from the previously discharged assemblies is relatively insignificant due to the length of time that has elapsed since discharge. Therefore, no modifications of the spent fuel pool cooling system have been performed nor are any modifications planned as a result of the increased fuel storage capacity.

The licensee further indicated that the calculation of the decay heat generation rate was in accordance with the guidelines of NUREG-0800, SRP Section 9.1.3, "Spent Fuel Pool Cooling and Cleanup System," and Branch Technical Position ASB 9-2, "Residual Decay Energy for Light-Water Reactors for Long-Term Cooling." For the normal refueling discharge case, the licensee postulated that 76 assemblies with a burnup of 1050 days were discharged into the spent fuel pool after decaying 145 hours in the reactor vessel. Subsequent to discharge, the spent fuel pool was assumed to contain the 76 newly discharged assemblies, 1076 assemblies discharged after previous fuel cycles, and 193 empty cells representing the full core discharge capacity. The staff notes that the licensee's calculation of the normal refueling discharge heat load case does not assume the spent fuel pool is full, but rather reserves 193 empty cells. Therefore, the staff has made an independent assessment which confirms that adequate heat removal capability is available in the event these cells are filled with spent fuel since their contribution to the total heat load is negligible.

The calculated maximum normal heat load is 17.48 x 10^6 Btu/hr and the pool bulk temperature resulting from this discharge scenario and assuming a single failure is 150°F. Assuming a complete loss of pool cooling commencing at the time of maximum pool bulk temperature, the pool temperature would increase at a rate of 7.30°F/hr. For this case, 8.5 hours are available to re-establish pool cooling before bulk boiling occurs.

For the full core discharge case, 193 assemblies with burnups ranging from 666 days to 1050 days were assumed to have been discharged into the spent fuel pool after decaying 267 hours in the reactor vessel. Prior to discharge, all but the 193 empty cells contained fuel assemblies discharged after previous fuel cycles. The maximum abnormal heat load is 35.00 x 10^6 Btu/hr and the pool bulk temperature resulting from this discharge scenario is 200°F. Assuming a complete loss of pool cooling commencing at the time of maximum pool bulk temperature, the pool temperature would increase at a rate of 14.6°F/hr. For this case, 49.2 minutes are available to re-establish pool cooling before bulk boiling occurs.

The licensee, accordingly, proposed to revise TS Section 3.8.A.9, in part, to read: "No movement of irradiated fuel in the reactor shall be made until the reactor has been subcritical for at least 145 hours...In the event that more than one region of fuel (72 assemblies) is to be discharged from the reactor, those assemblies in excess of one region shall not be discharged before the interval of 267 hours has elapsed after shutdown."

Based on our review, we conclude that IP-3 spent fuel pool cooling adequately meets the guidance of SRP 9.1.3 as it relates to the heat removal capability under the maximum normal heat load when assuming a single failure.

The licensee performed a thermal-hydraulic analysis to demonstrate that in the event of a loss of external cooling, natural circulation in the proposed maximum density storage rack configuration will provide adequate cooling to all fuel assemblies. For the worst case (full core discharge), the pool water bulk temperature of 200°F was assumed to be the fuel assembly inlet temperature, the peak calculated coolant exit temperature at the top of the fuel storage racks is 222.9°F which is below the corresponding saturation temperature of 241.8°F. As such, the coolant will remain subcooled and nucleate boiling is precluded. Based on our review, we conclude that natural circulation in the spent fuel pool for the proposed maximum density storage rack configuration will provide adequate cooling to all fuel assemblies and, therefore, the design of the storage racks is acceptable in this respect.

5.2 Load Handling

The IP-3 licensee proposed to revise the TS to accommodate handling the loads required for installation of the maximum density fuel racks and provided a safety analysis report to discuss the various aspects relating to such movement. These proposed changes are evaluated below.

5.2.1 TS Section 3.8.c.2

The current TS Section 3.8.c.2 states that "the spent fuel cask shall not be moved over any region of the spent fuel pit which contains irradiated fuel. Additionally, if the spent fuel pit contains irradiated fuel, no loads in excess of 2000 pounds shall be moved over any region of the spent fuel pit." In order to permit removal of the existing storage racks and the installation of new storage racks, the licensee proposed to revise TS Section 3.8.c.2 to read: "The spent fuel cask shall not be moved over any region of the spent fuel pit which contains irradiated fuel. Additionally, if the spent fuel pit contains irradiated fuel, no loads in excess of 2000 pounds shall be moved over any region of the spent fuel pit. This prohibition does not apply to the movement of the existing high density or replacement maximum density spent fuel storage racks over the spent fuel pit during the storage rack replacement effort, provided that the fuel stored in the spent fuel pit has been subcritical for a minimum of 120 days."

The licensee indicated that prior to any movement of these storage racks, all of the fuel assemblies in the spent fuel pool will have been subcritical in excess of 120 days. Even if the maximum 1345 fuel assemblies are assumed to be damaged as a result of a load drop, the offsite doses will be less than 1/4 of the 10 CFR Part 100 limits. Based on our review of licensee's rationale, we find the above the licensee's proposed change to TS Section 3.8.c.2 acceptable.

5.2.2 Basis for TS Section 3.8, "Refueling Fuel Handling and Storage"

In order to permit necessary travel of the crane over the spent fuel pit in removal of the existing high density spent fuel racks and installation of new maximum density racks, it will be necessary for the fuel storage building crane to carry these racks in and out of the spent fuel pit. The licensee indicated that the existing mechanical stops provided to prevent such movement must be removed. However, the licensee committed to preclude the movement of new or old racks directly over spent fuel assemblies by administrative controls which incorporated predetermined safe load pathways. Accordingly, the licensee added the following paragraph to the basis for TS Section 3.8 with regard to movement of storage racks:

> "During the spent fuel storage rack replacement effort, the mechanical stops incorporated in the crane bridge rails will be removed. However, administrative controls will preclude the movement of the existing high density or replacement maximum density racks directly over spent fuel assemblies."

Based on our review, we find the above licensee's action and administrative controls regarding the movement of storage fuel racks acceptable.

5.3 Conclusion

Based on our review, we find the licensee's proposed changes to the IP-3 TS with regard to spent fuel pool storage capacity expansion acceptable. However, it should be noted that the proposed TS changes for load handling (as

described in Section 2.2 of this SER) are found acceptable only on a temporary basis so that the licensee can rerack the spent fuel pool. Once that has been completed the temporary TS changes for load handling will become obsolete and the TS should be reverted to those existing before the temporary TS changes were incorporated.

6.0 RADIATION PROTECTION AND ALARA CONSIDERATIONS

6.1 Occupational Exposure Controls

The Spent Fuel Pit rerack job will fall under the purview of the Indian Point 3 ALARA program and will require pre-job briefings, man-rem estimates, and exposure tracking. There will be continuous HP coverage for the duration of the removal/installation project to ensure that ALARA principles are being followed. Radiation monitors will be placed around the work area and radiation surveys will be made to monitor the radiation levels around the SFP. The use of divers will be minimized by relying as much as possible on the use of remote tooling. However, certified divers will be available at the job site in the event that they are needed. Each scheduled dive will be preplanned and the job package will require the concurrence of contractor, engineering, and HP personnel. The licensee will perform underwater radiation surveys prior to the use of divers and all divers will be equipped with underwater alarms and remote (radio contact) dosimetry. In addition, divers will be separated from fuel assemblies by at least three empty rows of fuel storage cells at all times to minimize diver doses.

Prior to initiation of the rerack work, the licensee will make use of a skimmer and the ion exchange beds of the SFP purification system to clean up the SFP water and reduce the concentrations of radioactive materials in the water. The licensee will use an underwater vacuum filter cask to remove crud and contamination from the SFP walls and floor if needed. This will reduce the potential of divers becoming contaminated with discrete radioactive particles (DRP). To minimize potential spread of DRPs outside the SFP, the licensee will perform special surveys of lifting cables whenever old racks are being removed from the SFP. The licensee will monitor and appropriately decontaminate and/or wrap all material and equipment prior to removal from the spent fuel pool area.

An isotopic analysis of the SFP water indicates that the primary radionuclides are Co-57, Co-58, Co-60, and Cs-137. These radionuclides are the primary source of radiation in the spent fuel pool. The spent fuel stored in the pool is shielded by a minimum of 10 feet of water over the active fuel in the pins and contributes only 1-2 mR/hr of the 2-6 mR/hr dose rate at the pool surface. Installation of the maximum density racks will not cause any increase in the SFP surface dose rates.

The southern wall of the SFP is the only wall of the SFP that would have personnel working on the opposite side. This area is a high radiation area being used to store radwaste. The increase in dose rates in this area due to

the storage of maximum density fuel racks would be less than 1 mR/hr and would result in a negligible increase in annual occupational dose. The licensee has estimated that the collective occupational exposure for the SFP reracking will be between 10 and 15 person-rems. This estimate includes the dose accrued from the reracking work (including an allowance for dose to divers, if they are used) and the dose required to decontaminate and package the old fuel racks for shipment offsite. This estimate may be revised upon selection of a contractor for the installation/removal. This estimate is within the historical range of doses for SFP reracking operations and is a small fraction of the approximately 320 person-rems per year that Indian Point 3 has averaged over the past five years. The staff finds this estimate to be reasonable and acceptable.

Based on our review of the Indian Point 3 proposal, we conclude that the projected activities and estimated person-rem doses for this project appear reasonable. The licensee intends to take ALARA considerations into account and to implement reasonable dose-reducing activities. We conclude that the licensee will be able to maintain individual occupational radiation exposures within the limits of 10 CFR Part 20 and maintain doses ALARA, consistent with the guidelines of Regulatory Guide 8.8. Therefore, the proposed radiation protection aspects of the SFP rerack are acceptable.

6.2 Design Basis Accidents

In its application, the licensee evaluated the possible consequences of postulated accidents and included means for their avoidance in the design and operation of the facility, and has provided means for mitigation of their consequences should they occur. The staff independently assessed such so-called design basis accidents (DBAs) and agrees with the licensee that no previously unconsidered DBA would be created by the installation and operation of the reracked spent fuel storage pool.

In its previous Safety Evaluation Report (Indian Point Nuclear Generating Unit No. 3, September 21, 1973 and January 16, 1975 (Supplement)), the staff conservatively estimated offsite doses due to exposures to radionuclides released to the atmosphere from a fuel handling accident. This is the staff's scoping DBA for the spent fuel storage pool. The staff concluded that the plant mitigative features would reduce the DBA doses to well below the doses specified in the applicable regulation at 10 CFR Part 100.

Since the applicant intends to utilize higher enrichment fuel, for which higher burnups are intended, the staff reanalyzed the fuel handling DBA for this case. Increased burnup could increase offsite doses from the fuel handling DBA by a factor of 1.2 (NUREG/CR-5009, February 1988). Burnup to 60,000 MWD/T would require the use of fuel initially enriched to about 5.3 weight percent U-235. Thus, we conservatively increased the previously estimated doses by a factor of 1.2. In Table 1.0, the new and old DBA doses

are presented and compared to the guideline doses in 10 CFR Part 100. As shown in this table, the DBA doses are still well within the regulatory guideline values and are, therefore, acceptable.

7.0 ENVIRONMENTAL CONSIDERATION

Pursuant to 10 CFR 51.21, 51.32 and 51.35, an environmental assessment and finding of no significant impact have been prepared and published (54 FR 41527) in the Federal Register on October 10, 1989. Based upon the environmental assessment, the Commission has determined that the issuance of this amendment will not have a significant effect on the quality of the human environment.

8.0 CONCLUSION

The Commission published a Notice of Consideration of Issuance of Amendment to Facility Operating License and Opportunity for Hearing in the Federal Register on July 5, 1988 (54 FR 2522). No requests for hearing were received and the State of New York did not have any comments.

We have concluded, based on the considerations discussed above, that: (1) there is reasonable assurance that the health and safety of the public will not be endangered by operation in the proposed manner, and (2) such activities will be conducted in compliance with the Commission's regulations and the issuance of this amendment will not be inimical to the common defense and security or to the health and safety of the public.

Principal Contributors: J. Neighbors
L. Kopp
C. Hinson
J. Minns
J. Wing
D. Shum
H. Ashar

Dated: October 12, 1989

TABLE 1.0

Radiological Consequences of Fuel
Handling Design Basis Accident (rem)

	Exclusion Area		Low Populaton Zone	
	Thyroid	Whole Body	Thyroid	Whole Body
Original Estimates (SER - 1973, Table 15.1)	67	8	19	2
Estimates for Higher Fuel Burnup*	80	9.6	22.8	2.4
Regulatory Requirement (10 CFR Part 100)	300	25	300	25

*Factor of 1.2 greater than original estimate

APPENDIX A

TECHNICAL EVALUATION REPORT

EVALUATION OF THE MAXIMUM DENSITY SPENT FUEL RACK STRUCTURAL ANALYSIS FOR NEW YORK POWER AUTHORITY INDIAN POINT STATION UNIT 3 NRC DOCKET NO. 50-286

By

J. Braverman

STRUCTURAL ANALYSIS DIVISION

DEPARTMENT OF NUCLEAR ENERGY

BROOKHAVEN NATIONAL LABORATORY

UPTON, NEW YORK

September 1989

Prepared for U.S. Nuclear Regulatory Commission

Office of Nuclear Reactor Regulation

FIN A-3841, Task No. 13, TAC No. 68233

Executive Summary

This report describes and presents the results of the BNL technical evaluation of the structural analysis submitted by New York Power Authority (NYPA) in support of their licensing submittal on the use of maximum density spent fuel racks at Indian Point Station Unit 3 (I.P. Unit 3) Nuclear Power Plant. The review was conducted to ensure that the racks meet all structural requirements as defined in the NRC Standard Review Plan and the NRC OT Position for Review and Acceptance of Spent Fuel Pool Storage and Handling applications.

The proposed maximum density spent fuel storage rack modification involves the installation of twelve free-standing, self-supporting modules of varying sizes arranged next to one another. Each rack module consists of individual cells of square cross-section, each designed to accommodate one fuel assembly. Since the racks are neither anchored to the pool floor or walls nor connected to each other, during an earthquake, the racks would be free to slide and tilt. Because of the nonlinear nature of this design, a time history analysis was required to characterize the seismic response of the fuel racks.

The BNL review focused primarily on the seismic analysis of the fuel rack modules because of the complexity of the analysis method and the number of simplifying assumptions that were required in developing the dynamic models. BNL also reviewed other analyses performed by the Licensee including fuel handling accident analyses, thermal analyses, and spent fuel pool analyses.

During the course of the review, a number of questions were raised regarding the adequacy of the fuel rack dynamic models. Concerns were raised that single rack models may underpredict seismic forces and displacements that would occur in the real multiple rack fuel pool environment. The use of a two-dimensional (2-D) model to predict the nonlinear response due to three perpendicular and simultaneous inputs was another major concern. Concerns were also raised regarding the adequacy of the fuel racks to sustain impact loads. To address such concerns, the Licensee provided additional information and performed additional studies, to demonstrate the adequacy of the maximum density racks.

The additional studies indicated that in general, the forces from the design basis single rack analyses (based on consolidated fuel) are greater than the forces from the multiple rack analyses (based on standard fuel) and comparable to the forces from the additional parametric analysis using 1% damping (based on standard fuel). To a large extent this occurred because the design of the racks was based on the larger forces generated by either the consolidated fuel or standard fuel. Since the consolidated fuel mass is much larger than the standard fuel, the seismic forces were

also larger which compensated for any unconservatisms in the analytical methodology. Currently, NYPA is requesting licensing approval for the racks considering standard fuel only. As for rack to rack impact forces and displacements, the multiple rack analyses resulted in the maximum values for these responses. In spite of the larger impact forces and displacements, the structural adequacy of the racks, fuel assemblies, and pool structure under the postulated load combinations was demonstrated. These results coupled with the conservatism present in the analyses demonstrate the adequacy of the fuel rack design.

Based on the BNL review of the Licensee's analysis, it is concluded that the proposed I.P. Unit 3 maximum density fuel racks and spent fuel pool are designed with sufficient capacity to withstand the effects of the postulated environmental and abnormal loads.

TABLE OF CONTENTS

1.0 INTRODUCTION 1

1.1 Purpose 1
1.2 Background 1
1.3 Scope of Review 1

2.0 ACCEPTANCE CRITERIA 2

3.0 FUEL RACK DESCRIPTION 3

4.0 TECHNICAL EVALUATION 4

4.1 Fuel Rack Seismic Analysis 4

4.1.1 Dynamic Model 4
4.1.2 Fluid Coupling Effects 6
4.1.3 Friction Effects 7
4.1.4 Damping 8
4.1.5 Seismic Input Motion 9
4.1.6 Analysis Method 9
4.1.7 Analysis Results 11
4.1.8 Evaluation of Results 12

4.2 Multiple Rack Seismic Analysis 12

4.2.1 Multi-Rack Model 12
4.2.2 Multi-Rack Analysis/Results 14
4.2.3 Multi-Rack Bounding Analysis 15

4.3 Thermal Analysis 16

4.4 Overall Evaluation of Seismic Analysis Results . . 16

4.5 Fuel Handling Accident Analyses 17

4.6 Spent Fuel Pool Analysis 18

4.6.1 Loads and Load Combinations 18
4.6.2 Spent Fuel Pool Structure Analysis 19

5.0 CONCLUSIONS 20

6.0 REFERENCES 22

1.0 INTRODUCTION

1.1 Purpose

This technical evaluation report (TER) describes and presents the results of the BNL review of NYPA's licensing submittal on the use of maximum density fuel racks at I.P. Unit 3 with respect to their structural adequacy.

1.2 Background

The maximum density racks will be placed in the spent fuel pool (elevation 54' - 7¼") located in the fuel storage building. With the planned installation of the twelve racks, there will be a total capacity of 1345 cells.

The proposed racks consist of individual cells of square cross-section, each of which accommodates a single PWR fuel assembly. The cells are assembled into distinct modules of varying sizes which are to be arranged within the existing spent fuel pool as shown in Figure 1. Each module is free-standing and self-supporting.

The Licensee provided a summary of his safety analysis and evaluation of the proposed racks in a Licensing Report (Ref. 1). The report described the structural analysis and design of the new fuel racks. It also gave a description of postulated dropped fuel and jammed fuel accident analyses.

Brookhaven National Laboratory (BNL) reviewed the Licensing Report and generated a list of additional information needed to complete the review. This request for additional information was transmitted to the Licensee in Reference 2. The Licensee provided the information and responses in a later submittal (Ref. 3a). BNL also participated in an audit of the fuel rack analyses conducted at the plant site on 3/9 to 3/10/89. At this meeting additional documents including the latest Seismic Analysis Report and Mechanical Report were provided for review. In addition, a meeting was held on July 19, 1989 at the NRC to resolve many of the open items. Additional studies were subsequently performed with the results presented in Reference 3b.

1.3 Scope of Review

The objective of the BNL technical review was to evaluate the adequacy of the Licensee's structural analysis and design of the proposed maximum density spent fuel racks and spent fuel pool. Due to the complex nature of the fuel rack seismic analysis, the primary focus of the review was on the adequacy of the nonlinear fuel rack models and their dynamic analysis. The structural evaluation of fuel racks subjected to the dropped fuel and jammed fuel handling accidents described in the Licensee's report (Ref.

1) were included in this review. However, the definition of these postulated accidents and their parameters (drop height, uplift force, etc.) were beyond the scope of this review. A limited review of the spent fuel pool was conducted to ensure that appropriate loads, methodology and acceptance criteria were applied.

2.0 ACCEPTANCE CRITERIA

The acceptance criteria for the evaluation of the spent fuel rack applications are provided in the NRC OT Position for Review and Acceptance of Spent Fuel Storage and Handling Applications (Ref. 4). Structural requirements and criteria given in this position paper were updated and included as Appendix D to Standard Review Plan 3.8.4, "Technical Position on Spent Fuel Pool Racks," (Ref. 5). These documents state that the main safety function of the spent fuel pool and fuel racks is to maintain the spent fuel assemblies in a safe configuration through all environmental and abnormal loadings, such as earthquakes, and impact due to spent fuel cask drop, drop of a spent fuel assembly, or drop of any other heavy object during routine spent fuel handling.

Section 2 of SRP 3.8.4, Appendix D gives the applicable Codes, Standards and Specifications. Construction materials should conform to Section III, Subsection NF of the ASME Code. Design, fabrication and installation of stainless steel spent fuel racks may be performed based upon the ASME Code Subsection NF requirements for Class 3 component supports.

Requirements for seismic and impact loads are discussed in Section 3 of Appendix D. It states that seismic excitation along three orthogonal directions should be imposed simultaneously for the design of the new rack system. Submergence in water may be taken into account. The effects of submergence are considered on a case-by-case basis. Impact loads generated by the closing of fuel assembly to fuel rack gaps during a seismic excitation should be considered for local as well as overall effects. It should also be demonstrated that the consequent loads on the fuel assemblies do not lead to fuel damage. Loads generated from other postulated events may be acceptable if sufficient analytical parameters are provided for review.

Loads and load combination requirements are provided in Section 4. Specific loads and load combinations are acceptable if they are in conformance with Section 3.8.4-II.3 and Table 1, Appendix D of the Standard Review Plan. Changes in temperature distribution should be considered in the design of the pool structure. Temperature gradients across the rack structure due to differential heating effects between a full and an empty cell should be incorporated in the rack design. Maximum uplift forces from the crane should be considered in the design.

Section 5 discusses design and analysis procedures. It states that design and analysis procedures in accordance with Section 3.8.4-II.4 of the Standard Review Plan are acceptable. The effects of gaps, sloshing water, and increase of effective mass and damping due to submergence in water should be quantified. Details of the mathematical model including a description of how the important parameters are obtained should be provided.

Structural acceptance criteria are provided in Section 6. The acceptance criteria are given in Table 1 of Appendix D. For impact loading, the ductility ratios utilized to absorb kinetic energy should be quantified. When considering seismic loads, factors of safety against gross sliding and overturning of the racks shall be in accordance with Section 3.8.5-II.5 of the Standard Review Plan unless it can be shown that either (a) sliding motions are minimal, impacts between adjacent racks and between racks and walls are prevented and the factors of safety against tilting are met, or (b) sliding and tilting motions will be contained within geometric constraints and any impact due to the clearances is incorporated.

3.0 FUEL RACK DESCRIPTION

The maximum density storage rack configuration consists of two regions, identified as Region 1 and Region 2. Region 1 is designed for storage of unirradiated fuel with an enrichment as specified in Reference 1. It provides space for storage of partially burned fuel and a full core unload. Region 2 is designed for storage of irradiated fuel with initial enrichment and burnup as specified in Reference 1. Region 1 consists of three 80-cell racks, providing 240 storage spaces. Region 2 consists of nine racks ranging in size from 104 to 132 cells, providing 1105 storage cells.

The total 1345 storage cells are arranged in twelve free-standing rack modules as shown in Figure 1. Physical data for each rack is provided in Table 1. Gaps of 1.5" are provided by spacers between racks in Region 1 and between Region 1 and Region 2 rack interface. All other racks are installed with nominally no gap.

The spent fuel storage rack design is a welded honeycomb array of stainless steel boxes without a grid frame structure. Each cell has a welded-in bottom plate (either ½" or ¾" thick) to support the fuel assembly. A central hole in the bottom plate provides for cooling water flow. All storage cells are bounded on four sides by Boral poison sheets, except on the periphery of the pool rack array.

Region 1 consists of square storage cells which are spaced in both directions by a narrow rectangular water box (see Figure 2). The Boral poison sheets are captured between adjacent walls of the storage cells and water boxes. The required space for the poison is provided by local round raised areas coined in the box walls to half the thickness of the poison sheets. All boxes are fusion

welded together at these local raised areas. The poison sheets are scalloped along their edges to clear the raised areas, which also serve to retain the sheets laterally. See Figure 3 for a typical elevation view of the cells.

Region 2 consists of square storage cells with a poison sheet captured between adjacent boxes (see Figures 4 and 5) in the same manner as described in Region 1.

The rack modules and their supports are fabricated from ASTM A-240, Type 304 austenitic stainless steel sheet and plate material. Each rack is supported and leveled on four screw pedestals as shown in Figure 6. These pedestals rest on bridge plates where it is necessary to protect the fuel pool liner seam welds from movements of the rack feet. Tables 1 and 2 summarize the physical data for each module type.

4.0 TECHNICAL EVALUATION

4.1 Fuel Rack Seismic Analysis

The spent fuel storage racks are seismic Category I equipment required to remain functional during and after a safe shutdown earthquake (SSE). As described in Section 3.0, the proposed racks consist of 12 distinct free-standing modules which are neither anchored to the pool floor, attached to the side walls, nor connected to each other. Any rack may be completely loaded with fuel assemblies, partially loaded, or completely empty. The fuel assemblies are free to rattle within their storage cells.

Seismic forces are transmitted to the racks through friction at the support leg to pool floor interface. If seismic displacements are large enough, the racks can slide and the support legs can lift off and impact the pool floor. Because of these nonlinearities, a time history analysis of nonlinear rack models was required to characterize the seismic response of the fuel racks. BNL's review of the details of the modeling technique and analysis method is described in the following sections.

4.1.1 Dynamic Model

The design basis analysis is a 2-D single rack analysis described in the Safety Analysis Report (Ref. 1). The 2-D single rack model is shown on Figure 7. It consists of a center stick representing the fuel and another stick (shown on each side of the fuel) representing the rack structure. There are six levels of masses considered in the model for each of the sticks. Generally, one tenth of the mass is lumped at the base and at the top node while one fifth of the mass is lumped at the other four intermediate nodes for the rack, fuel, and fluid mass.

Each fuel mass is free to translate horizontally (rattle) within the specified fuel to rack gap and impact the rack structure. Impact between the fuel and the rack cells was modelled by two gap-spring elements at each nodal elevation. The gaps represent the clearance on either side of a fuel assembly placed centrally in the cell. The spring at each elevation represents the total contact stiffness between the rack and the fuel assemblies. During impact, the fuel assembly grid and cell wall act as springs in series. Therefore, the contact stiffness at each nodal elevation was determined by considering the stiffness of the grid and cell wall acting in series.

Beam elements connect the lumped masses. The rack beam elements model the flexibility of the rack structure while the fuel beam elements model the flexibility of the fuel assembly. The element stiffness properties were determined by calculation and by tests on actual rack cells containing fusion welds.

Horizontal responses to the seismic motion of the ground were obtained by evaluating the loadings for two different boundary conditions, as follows:

1. The horizontal motion was restrained by a friction force equal to the friction coefficient times the normal force. The minimum friction factor of 0.2 between the rack pedestals and the floor was utilized for this case. These results gave the maximum distance the racks will move during a seismic event.

2. Differential motion between the pedestal and the floor was prevented. This was done by placing a spring (shown as element 11 on Figure 7) between the rack and a fixed point. This case corresponds to the upper bound coefficient of friction of 0.8.

The horizontal spring is physically equivalent to the flexibility of the rack walls between the pedestal and the centerline of the rack. The wall flexibilities are due to the fusion weld joint flexibilities and the shear flexibilities of the cell walls. The range of friction coefficient values are discussed further in Section 4.1.3.

Rack to rack impact gaps are not considered since the Licensee believed that the racks would move in phase due to the strong hydrodynamic fluid coupling forces. Rack to wall impact gaps are not applicable since in the 0.8 friction coefficient case, a spring was placed between the rack and a fixed point. As for the 0.2 friction coefficient case which represents the sliding case, the rack is free to displace horizontally. Since the calculated rack displacements were much smaller than the rack to wall gap, there was no need to model the rack to wall impact gap spring.

The assumption of in-phase rack motion was questioned during the review of the I.P. Unit 3 fuel racks. In reality, the racks have a nominally 0 inch gap from one another and will impact one another with some out of phase motion. The single rack model could not account for this behavior which may be quite important. This concern was separately addressed by the Licensee in the multiple rack analyses discussed in Section 4.2.

Another concern with the model was the use of spring element no. 11 for the 0.8 friction coefficient case. In reality this flexibility is internal to the rack and should be present for both 0.2 and 0.8 friction coefficient cases. The significance of modelling this parameter externally to a fixed point (ground) and using it only in the 0.8 friction coefficient case was also addressed in the multiple rack analyses discussed in Section 4.2.

Fluid coupling between rack and fuel assemblies, and between rack and adjacent racks or walls was simulated by including inertial coupling terms in the equations of motion. This is discussed in detail below. Fluid damping between rack and fuel assemblies, and between rack and adjacent racks was conservatively neglected in the model. In addition, the form drag opposing the motion of the fuel assemblies and the racks through the water was neglected.

Numerous design basis (DB) runs were made to cover many possible permutations of model parameters. These variations are shown in Table 3. They cover the following important model/ analysis permutations:

1.	rack size	- 132 cell and 80 cell racks
2.	friction coeff.	- .2 and .8
3.	direction	- NS and EW
4.	fuel	- consolidated and standard (normal)
5.	seismic load	- SSE and OBE

4.1.2 Fluid Coupling Effects

The effects of submergence of the fuel racks in a pool of water has a significant effect on their seismic response. The dynamic rack model incorporated inertial coupling (fluid coupling) terms in the equations of motion to account for this effect. For two bodies (mass m_1 and m_2) adjacent to each other in a frictionless fluid medium, Newton's equations of motion have the form:

$$(m_1 + M_{11})\ddot{X}_1 - M_{12}\ddot{X}_2 = \text{applied forces on mass } m_1$$

$$-M_{21}\ddot{X}_1 + (m_2 + M_{22})\ddot{X}_2 = \text{applied forces on mass } m_2$$

$\ddot{X}_1$, $\ddot{X}_2$ denote absolute accelerations of mass m_1 and m_2 respectively. M_{11} M_{12}, M_{21}, and M_{22} are fluid coupling coefficients which depend on the shape of the bodies and their relative disposition.

The basic theory is summarized in a paper by Fritz (Ref. 8). The equations indicate that the effect of the fluid is to add a certain amount of mass to the body (M_{11} to body 1), and an external force which is proportional to the acceleration of the adjacent body (mass m_2). Thus the acceleration of one body affects the force on the adjacent body. The force is a strong function of the interbody gap, reaching large values for very small gaps. It should be noted that fluid coupling is based on fluid inertial effects and does not constitute damping. Fluid damping was not included in the model.

Fluid coupling terms were included in the equations of motion for fuel masses vibrating within the racks and for racks vibrating adjacent to other racks or the pool wall. In the single rack analysis, the fluid coupling terms for fuel bundles within the rack cells were based on the methodology presented in Reference 6 (Dong) for standard fuel and Reference 7 (Stokey et al.) for consolidated fuel. Dong's methodology considers the vibration of an array of circular rods immersed in an infinite pool of water. The added mass coefficient is a function of the gap between the rods, the radius of the rods and the water displaced by the rods. The use of Dong's methodology considers the fluid flow through the fuel bundles. Since standard fuel assemblies are not channelled (rectangular enclosure) as in consolidated fuel assemblies, the use of Dong's methodology is considered more realistic and is thus acceptable.

The Stokey (et. al) methodology used for consolidated fuel, determined the equations for calculating hydrodynamic masses for an infinitely long rigid rectangular box inside a rigid infinitely long rectangular outer box/pool. The formulation developed for this case has also been confirmed by actual tests and thus is considered to be acceptable.

For rack to wall fluid coupling, the methodology presented by Fritz (Ref. 8) case 13 was utilized. This formulation considers a thin infinitely long plate of a given width vibrating in a fluid near a rigid wall boundary. This case has been used in the past for other fuel rack submittals to quantify the rack to wall fluid coupling terms. It has been determined to provide a reasonable estimate of the fluid coupling that exists for the configuration of the rack to wall vibration in water.

4.1.3 Friction Effects

Friction elements were used at the bottom of rack support leg elements of the model. The value of the coefficient of friction was based on documented test results given in Reference 9. The results of 199 tests performed on austenitic stainless steel plates submerged in water showed a mean value of coefficient of friction to be 0.503 with a standard deviation of 0.125. Based on twice the standard deviation, the upper and lower bounds are 0.753 and 0.253, respectively. Two separate analyses were performed for each load

case with values of coefficient of friction equal to 0.2 (lower limit) and placing spring element no. 11 between the rack and ground which is comparable to a 1.0 coefficient of friction (upper limit).

The use of both an upper and lower bounding value for the coefficient of friction is judged to be appropriate. Previous studies have indicated that low friction results in maximum sliding response of the racks while high friction results in maximum rocking or tilting response. Consideration of both cases should provide worst case displacements, stresses and impact loads.

4.1.4 Damping

Damping of the rack motion would develop from material hysteresis (material damping), structural deformation of the interconnected components (structural damping) and fluid damping effects. In the analyses of the I.P. Unit 3 racks 4% structural damping was utilized during the SSE and OBE.

In support of the use of 4% for SSE and OBE the Licensee referred to tests (documented in "Experimental and Finite Element Evaluation of Spent Fuel Rack Damping and Stiffness," by Scavuzzo, et al., September 1986) which demonstrates that the unique sandwich construction of U.S. Tool & Die racks provide a seismically designed structure with built-in damping to absorb earthquake energy. However, the use of 4% damping for SSE and OBE remained a concern because it is not in agreement with the I.P. Unit 3 FSAR Table 16.1-1 which requires 1% damping for OBE and SSE.

Section IV (3) of the NRC OT Position (Ref. 4) states that for plants where dynamic data are available, e.g., floor response spectra, the design and analysis of the new rack system may be performed by using either the existing parameters including the old damping values or new parameters in accordance with Regulatory Guides 1.60 and 1.61. The use of existing input with new damping values in Regulatory Guide 1.61 is not acceptable.

It should be noted (as explained in Section 4.1.5) that the seismic input motion to the racks was appropriately developed considering 1% damping; however, the structural damping in the model used 4% damping which was not acceptable based on the above. To address the significance of this, a study was done for the 132 cell single rack, coefficient of friction of 0.8, SSE, standard fuel, for N-S and E-W using 1% damping. The results for this case in terms of total resultant foot loads were compared to the 4% damping case. The forces for the 1% damped case were much higher; however, when compared to the consolidated fuel loads which were the bounding loads used for the design of the racks, the forces were only 2.2% higher.

Thus, the use of 4% damping while inappropriate, was considered acceptable on the basis of the very conservative bounding loads used in the design of the fuel racks. This occurred because the consolidated fuel weighs approximately 3,026 pounds compared to the standard fuel weight of about 1610 pounds. The extra mass resulted in larger seismic forces and since NYPA is requesting licensing approval for standard fuel, that conservatism was sufficient to address the use of the higher damping value.

4.1.5 Seismic Input Motion

The seismic loads applied to the I.P. Unit 3 fuel rack model were two acceleration time histories corresponding to the North-South and East-West direction. For the vertical direction an equivalent static load method was utilized as described in Section 4.1.6. The N-S and E-W motions were synthetically developed time histories which were based on the fuel pool design response spectra. The two time histories are shown in Figures 8 and 10 for the SSE load case. The artificial time histories were checked by the Licensee for statistical independence between the two motions and they were found to be acceptable.

A comparison of the pool design response spectra and spectra generated from the synthetic time history was generated at 1% damping and is presented on Figures 9 and 11. The broadened design spectra were used to make the comparison with the response spectra of the synthetic time histories. The comparison demonstrates that the spectra from the synthetic time history bounds the required floor response spectra and is thus acceptable.

To permit the use of the existing fuel pool design response spectra, the Licensee determined the increased mass of the pool considering the new maximum density racks with fuel. Since the increase in mass was small (approximately 5%), it was concluded that the increased mass due to the maximum density racks should not significantly affect the overall dynamic response of the building.

Based on the Licensee's description and the information reviewed, the methodology used to develop the two seismic input time histories for the fuel rack seismic analysis is acceptable.

4.1.6 Analysis Method

The analytical model described above was analyzed using the RACKOE computer code. RACKOE is a special purpose 2-D nonlinear finite element program developed primarily to analyze fuel rack behavior resulting from seismic disturbances. The program solves the equations of motion explicitly using "Euler's Extrapolation Formula."

The essential features of RACKOE were verified by analyzing simplified racks in the past with ANSYS and comparing the results

to RACKOE. These runs included fluid coupling and impact effects. Liftoff effects and structural damping were verified by hand calculations. Subsequently, sliding capability considering coefficient of friction was included in the program and verified by computer runs made with ANSYS.

Based on the above discussion and the use of the program in the licensing of fuel racks for other plants, the use of RACKOE is considered acceptable.

The rack model was subjected to each of the three components of earthquake separately. The horizontal seismic analysis was done using the time history method of analysis. The N-S motion with dead weight was analyzed and the E-W motion with dead weight was analyzed separately. The method of analysis accounted for the nonlinearities inherent in the spent fuel storage racks, which include: fuel to rack wall impacts, rack sliding, and vertical impact due to rack tipping.

The vertical seismic analysis was performed separately using the equivalent static load method. Since the vertical natural frequency is below 33 hz. a factor of 1.5 was applied to the peak acceleration of the applicable vertical floor response spectra. In accordance with I.P. Unit 3 FSAR, the vertical spectrum was assumed equal to two-thirds of the horizontal spectrum. The above procedure resulted in a vertical equivalent static acceleration of 0.53g for the SSE. This value was applied to the dead weight to obtain the vertical seismic forces.

The vertical seismic reaction forces were combined with the horizontal seismic forces (after subtracting out the dead weight) using the square root of the sum of the squares method (SRSS).

Two major concerns with the method of analysis described above were identified. The use of the equivalent static method to a system that responds in a nonlinear manner was questioned. Secondly, since the rack behavior under the postulated earthquake will be strongly influenced by the three components of the earthquake, it is questionable if the SRSS method of combination for the responses of the three components of the earthquake is a conservative method considering the nonlinearities present in the rack installation. It is expected that rack sliding, tilting, twisting, and impacts with the floor and other racks would be strongly influenced not only by the given horizontal motion and dead weight but by the <u>simultaneous</u> application of both horizontal and vertical seismic motions.

The first concern with the use of an equivalent static load method was addressed by the Licensee by performing a study. A dynamic analysis was subsequently performed for a 132 cell single rack with consolidated fuel for the SSE event. The analysis considered a combined vertical and horizontal time history input

(N-S and vertical then E-W and vertical). The maximum co-directional vertical response was obtained using the SRSS method. The maximum vertical force at the base of the rack on two pedestals was calculated to be equal to 361 kips (including dead weight). This was smaller than the 382 kips (including dead weight) calculated for the SRSS of three responses using the equivalent static method for the vertical direction. In fact the 361 kips would be even smaller because, the vertical seismic component is included twice; once in N-S with vertical, then E-W with vertical. Thus, in this particular instance the use of the equivalent static method resulted in a larger rack response than the limited dynamic analysis.

The second concern, relating to the use of the SRSS combination method for the responses from each of the three independent analyses, was addressed by performing an additional very conservative analysis. The model utilized to address this concern and to resolve several other questions was a multiple-rack model. The details of the model, analysis methodology, and results is described in Section 4.2.

4.1.7 Analysis Results

The RACKOE program computed displacements and forces at each instant of time during the earthquake. Stresses in the rack were computed from maximum pedestal forces and accelerations at the center of mass of the racks. D'Alemberts principal was used to calculate the accelerations of the center of mass of the rack. The calculated stresses were checked against the design limits. The load combinations and acceptance limits were reviewed and were found to agree with those presented in USNRC OT Position letter (Ref. 4).

Maximum rack displacements, vertical and horizontal pedestal forces and maximum rack impact forces are presented in Table 3 for the single rack design basis runs. Maximum stresses and safety factors at critical rack locations are summarized in Table 4. The results in Table 4 for the Region 1 rack are based on the design basis analysis for consolidated fuel at 4% damping. The results for the Region 2 rack are based on regular fuel at 1% damping which came from the special study which addressed the concern of proper damping values (see Section 4.1.4).

With regard to the potential damage to the fuel resulting from fuel to cell wall impacts, the Licensee indicated that lateral and vertical impact between the fuel and the rack would not damage the fuel. The results of the dynamic seismic analyses of the rack demonstrated that maximum fuel to cell wall impact force for one standard fuel assembly was only 276 pounds at the worst elevation under the SSE. Thus, the adequacy of the fuel assemblies were judged to be acceptable.

4.1.8 Evaluation of Results

The results of the Licensee's seismic analyses indicated that all stresses in the racks would meet their allowables and impact loads on fuel assemblies would not damage the fuel. In addition, the results of the single rack analyses show no impacts would occur with the pool walls.

However, considering the potentially unconservative modeling assumptions regarding multiple rack behavior, in phase motion between racks (no impacts), external spring to ground for 0.8 coefficient of friction case, and the SRSS combination of the three independent analyses, the Licensee performed additional analyses to address such concerns. These analyses are summarized in Section 4.2 and the overall assessment of the seismic analysis results is given in Section 4.4.

4.2 Multiple Rack Seismic Analysis

As a result of concerns related to the adequacy of a single rack model in predicting forces and displacements that would occur if multi-rack effects were considered, additional analyses were performed. These multi-rack analyses also addressed concerns related to the assumption of in phase motion between racks, the use of an external spring to ground for 0.8 coefficient of friction case, and the SRSS combination of results from the three independent analyses corresponding to each direction. A description of these additional analyses and their results are provided below.

4.2.1 Multi-Rack Model

This seismic analysis consisted of a row of three racks to investigate the adequacy of the deign basis single rack models in predicting the response of fuel racks in the actual multi-rack fuel pool environment. An issue of particular concern was that unlike the single rack analyses which did not have impacts with one another or the pool wall, in a multi-rack environment racks would impact one another and possibly the pool walls. Although the walls were originally designed to accommodate seismic loads from the existing fuel racks, impact loads on the wall could damage the walls or liner resulting in unacceptable leakage of water from the pool. In addition, no calculations were available to demonstrate the design adequacy of the racks under impact loads because no impacts were anticipated.

The following provides a description of the modeling parameters used in the 2-D multi-rack analysis:

- Two multi-rack models were developed, one for region 1 and another for region 2. Each model contained a row of three racks. The region 1 model consisted of the East row of 80 cell racks (see Figure 12). The region 2 model

consisted of the North row of 132 cell racks (see Figure 13).

- The fuel loading for each rack was; for the region 1 model (North to South) - ½ full, full, and empty and for the region 2 model (West to East) - ½ full, full, and empty. This loading was selected to promote out of phase response and maximum rack displacement. Normal unchanneled fuel was considered in this analysis.

- The multi-rack analysis was performed for coefficients of friction of 0.2 and 0.8 to cover the lower and upper limits. In both cases the flexibility of the rack (spring no. 11 in the single rack model) was correctly modelled internally to the rack.

- The rack to wall gaps corresponded to those shown on the drawings. Rack to rack gaps assumed for fluid coupling calculations were 1½ inches for the region 1 racks and 1" for region 2 racks. Rack to rack gaps used for impact springs were ¼ inch for both regions. The 1½ inch gaps used for fluid coupling in region 1 matches the actual gaps. The 1 inch gaps for fluid coupling in region 2 were very conservative since the actual gaps are nominally 0 inch.

- The seismic analysis for the region 1 racks was performed in the N-S direction while the analysis for region 2 racks was performed in the E-W direction. The higher SSE motions were analyzed for all of these cases.

Sketches of the model used for all of the multi-rack analyses are provided in Figure 14, and a description of the model is as follows:

The two-dimensional three rack model consists of, for each rack, a center stick representing the rack and one stick representing the fuel. There are six levels of masses considered in the model for each of the sticks, one at the base level and five above the base. One-tenth of the mass is lumped at the base, one-fifth at the next four levels, and one-tenth at the top of the rack for rack, fuel, and fluid mass.

The fluid hydrodynamic coupling terms for relative motion between the rack and wall or adjacent rack are computed using the Fritz model. The fluid coupling terms for the fuel consider flow through the bundle and is based on Dong.

Potential impacts between fuel and rack, rack to rack, and rack to wall are considered at each of the mass levels. Stiffness for the impact springs correspond to the local flexibility of the rack and is calculated from test results. The rack stick models

the flexibility of the rack in flexure. The fuel sticks model the flexibility of the fuel. The horizontal flexibility of the rack from the center of the mass to the support legs which was modelled externally to ground for the 0.8 coefficient of friction case (see Section 4.1.1), was correctly modelled internally to the rack (see Figure 14, spring element nos. 13, 26, and 34). Rack sliding is modelled by a sliding surface at the base of the supports. The friction force is the concurrent normal force multiplied by the coefficient of friction at a specific time during the seismic event.

4.2.2 Multi-Rack Analysis/Results

The 2-D multi-rack model shown in Figure 14 was analyzed with the same RACKOE computer program described in Section 4.1.6. The N-S time history and the vertical time history were applied simultaneously for the region 1 multi-rack model while the E-W time history and vertical time history were applied simultaneously for the region 2 multi-rack model. The horizontal time histories were the same as those utilized for the design basis single rack analysis (see section 4.1.5). In all of the multi-rack analyses, the submerged dead weight of the racks and fuel were included simultaneously to permit the proper calculation of the frictional resisting forces.

The key responses (pedestal forces, impact forces, and displacements are presented in Table 5 for the region 1 model and Table 6 for the region 2 model. Comparisons with the design basis single rack analysis are presented in Table 8. From Table 8, it is evident that the design basis pedestal forces considering standard fuel are comparable to the multi-rack results. However, the design basis pedestal forces considering consolidated fuel are substantially higher than the multi-rack results. In contrast though, the multi-rack analysis resulted in larger displacements than the single rack design basis results. However, no impact occurred in the multi-rack analyses for the region 2 (132-cell) racks. Table 5 indicates that impact forces are generated though for the region 1 (80-cell) racks.

The multi-rack analyses described above in-effect addressed the identified concerns dealing with (1) multi-rack behavior, (2) the assumption of in-phase motion used in the single rack design basis analyses, and (3) the use of an external spring to ground and its use only in the .8 coefficient of friction case. In utilizing a multi-rack model and incorporating the changes in the model to address the above concerns, the forces from the design basis single rack analysis were shown to be greater than the multi-rack results. Thus, it is concluded the three concerns identified above have been adequately addressed. The adequacy of the racks under impact loads is discussed separately in Section 4.2.3.

4.2.3 Multi-Rack Bounding Analysis

A major concern which arose during the review of the single rack seismic analysis was the independent analysis of the rack in the E-W, N-S, and vertical directions and then, combining the co-directional responses using the SRSS method. This concern was addressed by performing an additional 2-D multi-rack analysis based on very conservative assumptions. Since the RACKOE program was not yet fully operational for 3-D analysis, it was agreed to perform the additional analysis using very conservative model parameters in an effort to obtain an upperbound on the expected response that a 3-D model would provide.

The multi-rack bounding analysis utilized the same basic multi-rack model as described in Section 4.2.1 with the following critical parameters:

Region 2 (132-cell racks, std. fuel)
Event - SSE
Rack to rack fluid coupling - 1 inch
Rack to rack impact gap - 1/32 inch
Coeff. of friction - 0.2 and 0.8
Damping - 2%

This model in effect addresses and combines all of the significant concerns identified earlier in this TER.

The results of this analysis is shown in Table 7. Comparisons with the other set of multi-rack analyses and the design basis single rack analyses are presented in Table 8. From Table 8 it is evident that the pedestal forces from the multi-rack bounding analysis are larger than the other multi-rack analyses, comparable to the design basis single rack results for standard fuel, and smaller than the design basis single rack results for consolidated fuel. Since the racks were also designed for the single rack - consolidated fuel loads, the racks are structurally adequate for the multi-rack bounding analysis loads as well.

However, the multi-rack bounding analysis generated rack to rack impact loads which were not present in the single rack analyses nor in the multi-rack - region 2 (132 cell rack) analysis. The rack design was checked for the additional impact loads generated by the multi-rack bounding analysis. The cell walls were checked for buckling which resulted in a maximum compressive stress of 0.59 ksi. The allowable buckling stress is 1.37 ksi resulting in a safety factor of 2.32. The allowable buckling stress of 1.37 ksi was calculated using 2/3 of the critical buckling stress in accordance with the ASME Code, Section III, Subsection NF and Appendix XVII-2000. The critical buckling stress was determined using the Euler buckling equation and conservatively considering the cell walls as a 9" column with pinned ends. The fusion welds were also checked for the impact loads in addition to

the thermal, seismic, and dead weight loads. The stresses in the fusion welds between cells were also shown to be less than allowables with a factor of safety of 1.80.

4.3 Thermal Analysis

Weld stresses due to heating of an isolated hot cell were computed. The analysis assumed that a single cell is heated to a relative temperature of 26°F higher than the temperature associated with the adjacent cell. Since this occurs for the region 1 racks (with water boxes), the maximum ΔT between a cell and the adjacent water box is 16°F. The stresses in the fusion weld for thermal alone were calculated to be 3.86 ksi at the top of the rack. The Licensee stated that since the temperature distribution in the hot cells is approximately linear, the thermal shear stress distribution will also be linear with zero at the bottom of the rack and the maximum at the top.

The total stress in the fusion weld including thermal, rack impact loads, seismic and dead weight is 29.1 ksi with a factor of safety of 1.80. The calculation and methodology utilized to obtain the thermal stress and total stress was reviewed and found to be acceptable.

4.4 Overall Evaluation of Seismic Analysis Results

There were a number of concerns identified with the seismic model and analysis methodology. Concerns were raised that a single rack model used in the design basis analysis may underpredict seismic forces and displacements that would occur in the real multiple rack fuel pool environment. This concern was addressed by numerous multi-rack analyses which demonstrated that in general, the pedestal forces from the design basis single rack analyses (based on consolidated fuel) were higher than the forces from the multiple rack analyses (based on standard fuel).

These multi-rack analyses also addressed concerns related to the assumption of in phase motion of racks, the use of an external spring to ground for the 0.8 coefficient of friction case, and the SRSS combination of results from the three independent analyses corresponding to each direction.

Another major concern which relates to the use of damping values greater than those tabulated in the I.P. Unit 3 FSAR, was addressed by performing an additional single rack analysis using 1% damping for a region 2 rack. The pedestal forces from the 1% damping case (based on standard fuel) were slightly higher (by 2.2%) than the design basis case (based on consolidated fuel). The results of the damping comparison for the region 2 racks are judged to be applicable to the region 1 racks as well. Thus, the most critical stress which occurs in the pedestal external threads (see Table 4) would increase, thereby reducing the safety factor

to 1.07. In reality though, this safety factor is higher because the actual allowable shear stress for the pedestal threads is 12.87 ksi rather than the 10.73 ksi utilized in the table. Thus, the concern of utilizing 4% damping has been adequately addressed by demonstrating that acceptable design margins exist if 1% damping and standard fuel is utilized.

Stresses resulting from impact forces generated by the additional analyses were evaluated and shown to be less than allowable values. Fuel to cell wall impact forces were evaluated for the cell wall and for fuel adequacy and shown to be acceptable.

Based on the above discussion and the ample design margins shown in Table 4, it has been demonstrated that the racks meet the current licensing requirements. Therefore, it is concluded that the fuel racks will maintain their structural integrity and the fuel assemblies will not sustain damage.

4.5 Fuel Handling Accident Analyses

The Licensee performed structural analyses and evaluations for four postulated fuel handling accidents. The four types of fuel handling accidents considered are:

.1 Straight Fuel Drop Onto Top of Rack

A 3026 pound consolidated fuel assembly dropping 20 inches on top of the rack was assumed. This input energy was used to calculate the plastic deformation in the cell walls based on actual cell box crush tests. Using this approach, the vertical plastic deformation was calculated at 5.65 inches. This limits the deformations at the very top away from the active fuel zone.

.2 Inclined Fuel Drop Onto Top of Rack

Since the inclined drop would distribute its impact over more than one cell, the plastic deformation for this case would be less severe.

.3 Straight Fuel Drop Through the Cell

This analysis concluded that the dropped fuel assembly would have sufficient energy to break the welds holding the individual cell baseplate to the cell. Although, the accident would render one storage cell location unusable, the Licensee concluded that the physical configuration of the spent fuel storage cell will not be changed. Therefore, the subcritical array of the rack would be maintained.

To address the adequacy of the pool liner, confirmatory calculations were performed for the drop of the fuel assembly through water alone and showed that the liner plate thickness would not be penetrated. The Ballistic Research Laboratory formula for steel target thickness was used. This confirms that the integrity of the pool liner would be maintained if a fuel assembly is dropped on it.

To address the adequacy of the dropped fuel assembly, the Licensee indicated that Section 14.2.1 of the Indian Point 3 FSAR addresses fuel handling accidents, including analysis of dropping a fuel assembly vertically onto a rigid surface. This analysis indicated that the buckling load on the fuel rods was below the critical buckling load and stresses in the cladding were below yield. The loads induced by dropping a fuel assembly vertically through an individual rack storage cell would be less severe than the case analyzed for the FSAR due to the kinetic energy absorbed by the cell bottom plate. The results of the previous FSAR fuel drop analysis, therefore, remain valid.

.4 2000 Pound Uplift Due to Fuel Jamming

A 2000 pound uplift force and a 2000 pound plus one consolidated fuel assembly weight downward force were each applied to a single cell separately. The most critical stress was calculated to be 2368 psi (in the welds) which is well below the allowable value.

Based upon the above discussion, the use of consolidated fuel weight (higher than standard fuel), and the review of the general methodology; the structural adequacy of the racks and pool liner under the postulated fuel handling accidents has been adequately demonstrated.

4.6 Spent Fuel Pool Analysis

The review of the analysis and design of the spent fuel pool structure was based on the audit conducted at the plant site on 3/9 to 3/10/89, on the information provided in References 1, 3a and 3b, and on the NYPA report "Structural Evaluation of the Spent Fuel Storage Building for Storage of U.S. Tool & Die Maximum Density Racks," Rev. 1, 3/25/88. This report and analysis was performed by Ebasco for NYPA considering the new maximum density racks with 1,345 spent fuel assemblies.

4.6.1 Loads and Load Combinations

The following design loads were considered in the reanalysis of the spent fuel pool.

- Dead loads including the racks, fuel, pool structure (concrete, liner, and equipment permanently attached), hydrostatic pressure (acting on walls and floor) and dead loads from adjacent floors and structural framings to the pool walls.

- Live loads from the fuel cask and adjacent platforms.

- Normal operating thermal load (200°F).

- Accident thermal load (212°F).

- Seismic loads - OBE and SSE including hydrodynamic loads of pool water acting on walls.

The above loading conditions were combined into 13 load combinations which are presented in section 4.4.1.2 of Reference 1. An evaluation of the load magnitudes, load factors, and load combinations determined that the controlling load combinations requiring the nonlinear concrete analysis are:

$1.4D + 1.7L$
$1.4D + 1.7L + 1.9E$
$0.75\ (1.4D + 1.7L + 1.9E + 1.7T_o)$
$D + L + T_a + E'$

The acceptance criteria for the reinforced concrete pool structure required that stresses and strains meet the design limits described in ACI 349-80. The capacity of all sections were computed based on the Ultimate Strength Design. The acceptance limit for the liner, liner welds, and liner anchors were in accordance with Paragraph CC-3720 and CC-3730 of ACI-ASME Section III, Division 2, Subsection CC.

The loads, load combinations, and acceptance criteria described above were reviewed and found to be acceptable.

4.6.2 Spent Fuel Pool Structure Analysis

The pool was analyzed by the finite element method of analysis using the EBS/NASTRAN computer program. The pool slab and walls were modelled using a 2-D quadrilateral plate element defined by four grid points. The thickness of the plate element was divided into layers representing concrete and reinforcing bars. The depth of concrete cracking and stresses in the concrete and reinforcing bars are automatically determined by computer iterations.

A computer plot of the finite element model is presented in Figure 15 which shows the overall view of the pool floor and pool walls. The soil under the mat was represented by linear springs at each nodal point in the three orthogonal directions, connecting the mat to the ground.

A nonlinear cracking analysis was performed to solve the interaction problem between thermal cracking and mechanical loads in the reinforced concrete structure. The effects of the three earthquake components were combined by the absolute sum method. This method is more conservative than the SRSS method. The analysis was performed for standard fuel.

The liner was evaluated for the temperature load, the strain induced load due to the deformation of the floor, and the maximum horizontal friction load due to seismic effects. The Ebasco program POSBUKF2628 was used for the liner buckling analysis while incorporating the effects of vertical seismic load and hydrostatic pressure. The liner anchors were evaluated for the unbalanced in-plane force due to the temperature and strain induced loads as well as the maximum horizontal friction force.

Table 9 presents the results of the fuel pool nonlinear structural analysis. For each of the four governing load combinations described earlier, maximum shear forces and bending moments along with allowables and safety factors are tabulated for the four major pool structural components (mat, exterior wall, interior wall, and canal mat). For shear, the most critical location is the mat near the fuel transfer canal wall with a safety factor of 1.08. For bending, the most critical location is the fuel transfer canal wall near the mat with a safety factor of 1.12.

The soil pressures under the mat from the maximum fuel rack loads were calculated from the pool analysis to be equal to a maximum soil bearing pressure of 17.9 ksf. This occurs at the north east corner of the pool slab and it is well below the allowable of 50 ksf.

The liner and liner anchors were checked for stress and strain limitations. Results indicated that the liner would not buckle and the maximum calculated strain of 0.0006375 in/in was below the 0.003 in/in allowable. The liner anchors were also shown to meet strain induced loads as well as the seismic induced mechanical loads.

Based on the above analysis, the results provide assurance that the pool structure is capable of supporting the new maximum density racks filled with normal weight fuel.

5.0 CONCLUSIONS

Many additional analyses were performed by the Licensee to successfully address the major concerns identified in this report. All critical stresses in the racks have been shown to be less than the allowable values. It has also been shown that impact loads generated between the fuel assemblies and cell walls would not lead to damage. Furthermore, it has been demonstrated that the existing

spent fuel pool has adequate capacity to accommodate the loads resulting from the maximum density racks and fuel assemblies.

Based on the review and evaluation of the Licensing Report, additional analyses and information provided by the Licensee during the course of this review, and the above discussion, it is concluded that the proposed I.P. Unit 3 fuel racks and pool structure have sufficient structural capacity to withstand the effects of all required environmental and abnormal loadings discussed in this report.

6.0 REFERENCES

1. New York Power Authority (NYPA) letter, "Indian Point 3 Nuclear Power Plant, Docket No. 50-286, Proposed Technical Specifications Regarding Spent Fuel Pool Storage Capacity Expansion," dated 5/9/88.

2. NRC letter to NYPA, "Request for Additional Information Related to the Indian Point 3 Spent Fuel Pool Expansion," J.D. Neighbors to J.C. Brons, dated 9/12/88.

3a. NYPA letter to NRC, "Indian Point 3 Nuclear Power Plant, Docket No. 50-286, Spent Fuel Pool Expansion" (TAC 68233), J.C. Brons to USNRC, dated 12/20/88.

3b. NYPA letter to NRC, "Indian Point 3 Nuclear Power Plant, Docket No. 50-286, Spent Fuel Pool Expansion," dated 9/15/89.

4. USNRC letter to all power reactor licensees, from B.K. Grimes, dated April 14, 1978, "OT Position for Review and Acceptance of Spent Fuel Storage and Handling Applications," as amended by the NRC letter dated January 18, 1979.

5. US Nuclear Regulatory Commission, "Standard Review Plan for the Review of Safety Analysis Reports for Nuclear Power Plants," NUREG-0800, Section 3.8.4, Revision 1, July, 1981.

6. R.G. Dong, "Effective Mass and Damping of Submerged Structures" Lawrence Livermore Laboratory, UCRL-52342, April 1, 1978.

7. Stokey, W.J., Scavuzzo, R.J. and Radke, E.E., "Dynamic Fluid Structure Coupling of Rectangular Modules in Rectangular Pools," ASME Special Publication PVP-39, 1979.

8. R.J. Fritz, "The Effects of Liquids on the Dynamic Motions of Immersed Solids," Journal of Engineering for Industry, Transactions of the ASME, February, 1972, pp 167-172.

9. E. Rabinowicz, "Friction Coefficients for Water Lubricated Stainless Steels for a Spent Fuel Rack Facility," a Report for Boston Edison Company, MIT, 1976.

TABLE 1

MODULE DATA

Module I.D.	No. of Modules	No. Cells In N-S Direction	No. Cells In E-W Direction	Total No. of Cells Per Module	Est. Dry Wt. (lbs) Per Module
Region 1 8721-2,-3,-4	3	10	8	80	27,880
Region 2 8721,-6,-9,-12	3	12	11	132	23,870
Region 2 8721-7,-8,-10 -11,-13	5	11	11	121	22,150
Region 2 8721-5	1	11*	10*	104	19,000

* Cells missing in this module in area of new-fuel elevator.

TABLE 2

SPENT FUEL RACK MODULE DATA

	Region 1	Region 2
Number of Storage Locations	240	1105
Number of Rack Arrays	3 (8x10)	3 (11x12) 3 (11x11) 1 (11x10)-(6)
Center-to-Center Spacing (Inches)	10.76	9.075
Cell I.D. (Inches)	8.83	8.83
Type of Fuel	(W) 15x15 Optimized	(W) 15x15 Optimized
Rack Assembly Dimensions (Inches) Height 177 1/2 All Racks	(8x10) 84-7/16 x 106-1/16	(11x12) 99-7/8 x 108-7/8 (11x11) 99-7/8 x 99-7/8 (11x10)-(6) 99-7/8 x 90-3/4
Dry Weights (lbs)	(8x10) 27,880	(11x12) 23,870 (11x11) 22,150 (11x10)-(6) 19,000

TABLE 3

DESIGN BASIS SINGLE RACK ANALYSES

	A	B	C	D	E	F	G
RUN NO.	IP3EWCI	IP3NSCI	IP3ONSCIF	IP3OEWCIF	IP3EWCIF	IP3NSCIF	IP3NS
DB/CONFIRM	DB	DB	DB	DB	DB	DB	DB
RACK SIZE, #CELLS	132	132	132	132	132	132	132
FRICTION, COEFF	.8	.8	.2	.2	.2	.2	.8
MULT/SINGLE, RACK	S	S	S	S	S	S	S
DIRECTION	EW	NS	NS	EW	EW	NS	NS
COMBINED LOADS?	NO	NO	NO	NO	NO	NO	NO
WET/DRY	WET	WET	WET	WET	WET	WET	WET
FIGURE REF.	2.1	2.1	2.1	2.1	2.1	2.1	2.1
REGION	2	2	2	2	2	2	2
CONS/NORM FUEL	CON	CON	CON	CON	CON	CON	NORM
TIME STEP, SEC	.0005	.0005	.0005	.0005	.0005	.0005	.0005
SYM/UNSYM, FUEL	SYM	SYM	SYM	SYM	SYM	SYM	SYM
MULTI MASS MODEL?	YES	YES	YES	YES	YES	YES	YES
SSE/OBE	SSE	SSE	OBE	OBE	SSE	SSE	SSE
DAMPING, %	4	4	4	4	4	4	4
GAP	---	---	---	---	---	---	---
DISPLACEMENT, INCH	.289	.276	.0114	.00126	.00348	.00306	.1928
MAX. PED FORCE ON (2 PED) KIPS	289.	310.	238.	258.	295.	264.	191.
MAX. HORIZ. FORCE, KIPS (2 PED)	89.	120.	---	---	---	---	84.0
GAPS:							
RACK TO RACK IMPACT	---	---	---	---	---	---	---
RACK TO RACK FLUID COUPLING	---	---	---	---	---	---	---

TABLE 3 (CONTD.)

	A	B	C	D	E	F	G
RUN NO.	IP3EWCI	IP3NSCI	IP3ONSCIF	IP3OEWCIF	IP3EWCIF	IP3NSCIF	IP3NS
RACK TO WALL IMPACT	---	---	---	---	---	---	---
RACK TO WALL, INCH FLUID COUP, INCH	5.09/ 5.09	10.06/ **	10.06/ **	5.09/ 5.09	10.06/ **	10.06/ **	
RACK TO FUEL IMPACT GAP, INCH	0.15	0.15	0.15	0.15	0.15	0.15	0.21
RACK TO FUEL FLUID COUP, INCH	0.15	0.15	0.15	0.15	0.15	0.15	*

* - Hydrodynamic mass based on Dong; conservative since proximity to wall not considered.

**- The gap is very large;; an infinite coupling gap was used at South wall near cask area.

TABLE 3 (CONTD.)

	H	I	J	K	L	M	N
RUN NO.	IP3EWI	IP3NSIF	IP3EWIF	IP3NSIFO	IP3EWIFO	IP3EWRICI	IP3NSRICI
DB/CONFIRM	DB	DB	DB	DB	DB	DB	DB
RACK SIZE,#CELLS	132	132	132	132	132	80	80
FRICTION,COEFF	.8	.2	.2	.2	.2	.8	.8
MULT/SINGLE	S	S	S	S	S	S	S
DIRECTION	EW	NS	EW	NS	EW	EW	NS
COMBINED LOADS?	NO	NO	NO	NO	NO	NO	NO
WET/DRY	WET	WET	WET	WET	WET	WET	WET
FIGURE REF.	2.1	2.1	2.1	2.1	2.1	2.1	2.1
REGION	2	2	2	2	2	1	1
CONS/NORM FUEL	NORM	NORM	NORM	NORM	NORM	CONS	CONS
TIME STEP,SEC	.0005	.0005	.0005	.0005	.0005	.0005	.0005
SYM/UNSYM,FUEL	SYM	SYM	SYM	SYM	SYM	SYM	SYM
MULTI MASS MODEL?	YES	YES	YES	YES	YES	YES	YES
SSE/OBE	SSE	SSE	SSE	OBE	OBE	SSE	SSE
DAMPING, %	4	4	4	4	4	4	4
GAP	---	---	---	---	---	---	---
DISPLACEMENT,INCH	.295	.303	.155	.1280	.117	.167	.138
MAX.PED FORCE ON (2 PED) KIPS	235.	163.	172.	162.	175.	206.	285.
MAX. HORIZ. FORCE, KIPS	91.	---	---	---	---	52.8	105.5
GAPS:							
RACK TO RACK IMPACT	---	---	---	---	---	---	---
RACK TO RACK FLUID COUPLING	---	---	---	---	---	---	---

TABLE 3 (CONTD.)

	H	I	J	K	L	M	N
RUN NO.	IP3EWI	IP3NSIF	IP3EWIF	IP3NSIFO	IP3EWIFO	IP3EWRICI	IP3NSRICI
RACK TO WALL IMPACT	---	---	---	---	---	---	---
RACK TO WALL, INCH FLUID COUP, INCH	5.09/ 5.09	10.06/ **	5.09/ 5.09	10.06/ **	5.09/ 5.09	5.09/ 5.09	10.06/ **
RACK TO FUEL IMPACT GAP, INCH	.21	.21	.21	.21	.21	.15	.15
RACK TO FUEL FLUID COUP, INCH	*	*	*	*	*	.15	.15

* - Hydrodynamic mass based on Dong; conservative since proximity to wall not considered.

**- The gap is very large;; an infinite coupling gap was used at South wall near cask area.

TABLE 3 (CONTD.)

	O	P	Q	R	S	T
RUN NO.	IP3EWR1CIF	IP3NSR1CIF	IP3EWR1F	IP3NSR1I	IP3EWR1IF	IP3NSR1IF
DB/CONFIRM	DB	DB	DB	DB	DB	DB
RACK SIZE,#CELLS	80	80	80	80	80	80
FRICTION, COEFF	.2	.2	.8	.8	.2	.8
MULT/SINGLE,RACK	S	S	S	S	S	S
DIRECTION	EW	NS	EW	NS	EW	NS
COMBINED LOADS?	NO	NO	NO	NO	NO	NO
WET/DRY	WET	WET	WET	WET	WET	WET
FIGURE, REF	2.1	2.1	2.1	2.1	2.1	2.1
REGION	1	1	1	1	1	1
CONS/NORM,FUEL	CONS	CONS	NORM	NORM	NORM	NORM
TIME STEP,SEC	.0005	.0005	.0005	.0005	.0005	.0005
SYM/UNSYM,FUEL	SYM	SYM	SYM	SYM	SYM	SYM
MULTI MASS MODEL?	YES	YES	YES	YES	YES	YES
SSE/OBE	SSE	SSE	SSE	SSE	SSE	SSE
DAMPING, %	4	4	4	4	4	4
GAP	---	---	---	---	---	---
DISPLACEMENT,INCH	.0878	.0642	.161	.0938	.1197	.1454
MAX.PED FORCE ON (2 PED) KIPS	218.	186.	197.	168.	148.	---
MAX. HORIZ. FORCE, KIPS	---	---	51.	71.	---	121.8
GAPS:						
RACK TO RACK IMPACT	---	---	---	---	---	---
RACK TO RACK FLUID COUPLING	---	---	---	---	---	---

TABLE 3 (CONTD.)

	O	P	Q	R	S	T
RUN NO.	IP3EWR1CIF	IP3NSR1CIF	IP3EWR1F	IP3NSR1I	IP3EWR1IF	IP3NSR1IF
RACK TO WALL IMPACT	---	---	---	---	---	---
RACK TO WALL, INCH FLUID COUP, INCH	5/4.51	5/4.10	5/4.51	5/4.10	5/4.51	5/4.10
RACK TO FUEL, INCH IMPACT GAP, INCH	.15	.15	.21	.21	.21	.21
RACK TO FUEL FLUID COUP, INCH	.15	.15	*	*	*	*

* - Hydrodynamic mass based on Dong; conservative since proximity to wall not considered.

**- The gap is very large;; an infinite coupling gap was used at South wall near cask area.

TABLE 3 (CONTD.)

	U	V	W	X	Y	Z
RUN NO.	IP3EWR1IFO	IP3NSR1IFO	IP3NSIH	IP3NSFE	IP3NSIHF	IP3NSE
DB/CONFIRM	DB	DB	DB	DB	DB	DB
RACK SIZE,# CELLS	80	80	132	132	132	132
FRICTION,COEFF	.2	.2	.8	.2	.2	.8
MULT/SINGLE,RACK	S	S	S	S	S	S
DIRECTION	EW	NS	NS	NS	NS	NS
COMBINED LOADS?	NO	NO	NO	NO	NO	NO
WET/DRY	WET	WET	WET	WET	WET	WET
FIGURE, REF	2.1	2.1	2.1	2.1	2.1	2.1
REGION	1	1	2	2	2	2
CONS/NORM,FUEL	NORM	NORM	NORM	EMPTY	NORM	EMPTY
TIME STEP,SEC	.0005	.0005	.0005	.0005	.0005	.0005
SYM/UNSYM,FUEL	SYM	SYM	UNSYM	SYM	UNSYM	SYM
MULTI MASS MODEL?	YES	YES	YES	YES	YES	YES
SSE/OBE	OBE	OBE	SSE	SSE	SSE	SSE
DAMPING, %	4	4	4	4	4	4
GAP	---	---	---	---	---	---
DISPLACEMENT,INCH	.0957	.1060	.1190	.82	.076	.052
MAX.PED FORCE ON (2 PED), KIPS	130.	125.	161.	19.	107.	83.
MAX. HORIZ. FORCE,KIPS	---	---	52.	---	---	23
GAPS:						
RACK TO RACK IMPACT	---	---	---	---	---	---
RACK TO RACK FLUID COUPLING	---	---	---	---	---	---

TABLE 3 (CONTD.)

	U	V	W	X	Y	Z
RUN NO.	IP3EWR1IFO	IP3NSR1IFO	IP3NSIH	IP3NSFE	IP3NSIHF	IP3NSE
RACK TO WALL IMPACT	---	---	---	---	---	---
RACK TO WALL, INCH FLUID COUP, INCH	5/4.51	5/4.10	10.06/**	10.06/**	10.06/**	10.06/**
RACK TO FUEL, INCH IMPACT GAP, INCH	.21	.21	.21	.21	.21	.21
RACK TO FUEL FLUID COUP, INCH	*	*	*	*	*	*

* - Hydrodynamic mass based on Dong; conservative since proximity to wall not considered.

**- The gap is very large;; an infinite coupling gap was used at South wall near cask area.

TABLE 4

MAXIMUM STRESS RESULTS OF RACK STRUCTURAL ANALYSIS

Location	Cond.	Type	Region 1 CONSOLIDATED FUEL, 4% DAMPING Actual (KSI)	Allowable (KSI)	Safety Factor	Region 2 REGULAR FUEL, 1% DAMPING Actual (KSI)	Allowable (KSI)	Safety Factor
Maximum Cell to Cell Fusion Weld Stress:	OBE	Shear	10.0	21.00	2.10	11.16	21.00	1.88
		Bend	13.6	18.00	1.32	13.11	18.00	1.37
	SSE	Shear	13.3	29.06	2.19	16.09	29.06	1.80
		Bend	18.0	36.00	2.00	17.43	36.00	2.07
Cell Bottom Plate to Box Wall Weld Stress:	OBE	Shear	13.0	21.00	1.61	13.26	21.00	1.58
	SSE	Shear	16.5	29.06	1.76	18.52	29.06	1.57
Top Pedestal Plate to Cell Bottom Pl Weld:	OBE	Shear	12.7	21.00	1.65	4.07	21.00	5.15
	SSE	Shear	19.0	29.06	1.52	6.13	29.06	4.74
Pedestal Thread Stress Internal:	OBE	Shear	6.43	8.58	1.33	5.43	8.58	1.58
	SSE	Shear	8.15	10.73	1.31	7.17	10.73	1.49
External:	OBE	Shear	7.66	8.58	1.12	6.41	8.58	1.34
	SSE	Shear	9.71	10.73	1.10	8.46	10.73	1.27

TABLE 5

MULTI-RACK ANALYSIS SUMMARY - REGION 1

(KIPS AND INCHES)

4% DAMPING
1/4" GAP

80 CELL
u = .8

COMPONENT	1/2 FULL RACK 1	FULL RACK 2	EMPTY RACK 3
AXIAL FORCE ON FOOT, KIPS	54.0	72.2	22.7
SHEAR FORCE ON FOOT, KIPS	19.5	13.8	11.2
RACK TO RACK IMPACT, LBS/LEVEL			
TOP	0	5,120	5,120
MIDDLE	0	3,102	3,102
BOTTOM	0	0	0
RACK TO WALL IMPACT, LBS	0	-	0
DISPLACEMENT, INCH			
TOP	0.16	0.13	0.26
BOTTOM	0.13	0.11	0.18

4% DAMPING
1/4" GAP

80 CELL
u = 0.2

COMPONENT	1/2 FULL RACK 1	FULL RACK 2	EMPTY RACK 3
AXIAL FORCE ON FOOT, KIPS	42.8	62.5	16.8
SHEAR FORCE ON FOOT, KIPS	8.3	11.9	3.0
RACK TO RACK IMPACT, LBS/LEVEL			
TOP	1,914		
MIDDLE	3,461		
BOTTOM	3,781		
RACK TO WALL IMPACT, LBS	---		---
DISPLACEMENT, INCH			
TOP	.20	.16	.19
BOTTOM	.19	.14	.19

TABLE 6

MULTI-RACK ANALYSIS SUMMARY - REGION 2

(KIPS AND INCHES)

	132-CELL u = .8	4% DAMPING 1/4" GAP	
COMPONENT	1/2 FULL RACK 11	FULL RACK 8	EMPTY RACK 5
AXIAL FORCE ON FOOT, KIPS	85.0	100.5	44.1
SHEAR FORCE ON FOOT, KIPS	34.2	31.5	35.3
RACK TO RACK IMPACT, LBS	0	0	0
RACK TO WALL IMPACT, LBS	0	0	0
DISPLACEMENT, INCH, TOP	-.38	.25	.40
BOTTOM	.22	.21	.21

	132-CELL u = .2	4% DAMPING 1/4" GAP	
COMPONENT	1/2 FULL RACK 11	FULL RACK 8	EMPTY RACK 5
AXIAL FORCE ON FOOT, KIPS	52.5	87.5	13.5
SHEAR FORCE ON FOOT, KIPS	10.1	17.2	2.4
RACK TO RACK IMPACT, LBS	0	-	0
RACK TO WALL IMPACT, LBS	0	-	0
DISPLACEMENT, INCH, TOP	0.40	0.53	0.44
BOTTOM	0.40	0.52	0.44

TABLE 7

MULTI-RACK BOUNDING ANALYSIS SUMMARY

(KIPS AND INCHES)

DAMPING - 2%
EVENT - SSE
GAP,IN - 1/32
u - .8

132-CELL

COMPONENT	1/2 FULL RACK 11	FULL RACK 8	EMPTY RACK 5
AXIAL FORCE ON FOOT, KIPS	113.8	125	51.3
SHEAR FORCE ON FOOT, KIPS	36.7	37.3	41.0
RACK TO RACK IMPACT, LBS			
TOP	3,934		139
MIDDLE	4,821		---
BOTTOM	10,660		8,350
RACK TO WALL IMPACT, LBS	---		---
BOTTOM DISPLACEMENT, INCH	.38	.24	.56

DAMPING - 2%
EVENT - SGE
GAP,IN - 1/32
u - 0.2

132-CELL

COMPONENT	1/2 FULL RACK 11	FULL RACK 8	EMPTY RACK 5
AXIAL FORCE ON FOOT, KIPS	53.8	83.7	16.4
SHEAR FORCE ON FOOT, KIPS	9.5	16.7	2.9
RACK TO RACK IMPACT, LBS			
TOP	9,922		9,543 *
MIDDLE	17,080		16,080
BOTTOM	11,990		11,270
RACK TO WALL IMPACT, LBS	---		---
BOTTOM DISPLACEMENT, INCH	.38	.41	1.34

* Inadvertently used 17,550 lb. in telephone discussion 8/1/89

TABLE 8

COMPARISON OF RESULTS

(Region 2, SSE case, E-W & Vertical + D.W,
.8 and .2 Friction Coefficient)

RESPONSE	SINGLE RACK* DESIGN BASIS		MULTI-RACK**	MULTI-RACK*** BOUNDING CASE
	Consol.	Std.		
AXIAL FORCE ON FOOT (KIPS)	168	125	101	125
SHEAR FORCE ON FOOT (KIPS)	45	46	35	41
RACK TO RACK IMPACTS (KIPS)	N.A.	N.A.	0	39
HORIZONTAL DISP. AT BASE (INCH)	.0035	.155	.44 (Empty Rack) .52 (Full Rack)	1.34 (Empty Rack) .41 (Full Rack)

*See Section 4.1 for description (4% damping, rack to rack fluid coupling and impact gap - not applicable).

**See Section 4.2.2 for description (4% damping, 1" fluid coupling gap, ¼" impact gap).

***See Section 4.2.3 for description (2% damping, 1" fluid coupling gap, 1/32" impact gap).

TABLE 9

MAXIMUM STRESS RESULTS OF POOL STRUCTURE ANALYSIS

Selected Load Combination	Location	Maximum Average Shear (Kips/In Width) Actual	Allowable	Safety Factor	Maximum Bending Moment (In-Kips/In Width) Actual	Allowable	Safety Factor
1.4D + 1.7L	Mat	0.96	3.68	3.83	59	135	2.29
	Ext Wall	1.58	6.75	4.27	131	213	1.63
	Int Wall	1.97	5.25	2.66	73	148	2.03
	Canal Mat	2.19	8.72	3.98			
1.4D + 1.7L + 1.9E	Mat	1.70	3.68	2.16	95	135	1.42
	Ext Wall	2.95	6.75	2.29	166	303	1.83
	Int Wall	3.02	5.25	1.74	82	148	1.80
	Canal Mat	3.60	8.72	2.42			
0.75 (1.4D + 1.7L + 1.9E + 1.7 To)	Mat	2.60	3.68	1.38	352	423	1.20
	Ext Wall	4.87	6.75	1.39	368	513	1.39
	Int Wall	7.55	8.24	1.09	911	1017	1.12
	Canal Mat	6.71	8.72	1.30			
D + L + Ta + E'	Mat	3.40	3.68	1.08	295	430	1.46
	Ext Wall	4.35	6.75	1.55	255	553	2.17
	Int Wall	7.34	8.24	1.12	466	832	1.79
	Canal Mat	7.40	8.72	1.18			

FIGURE 1

POOL LAYOUT

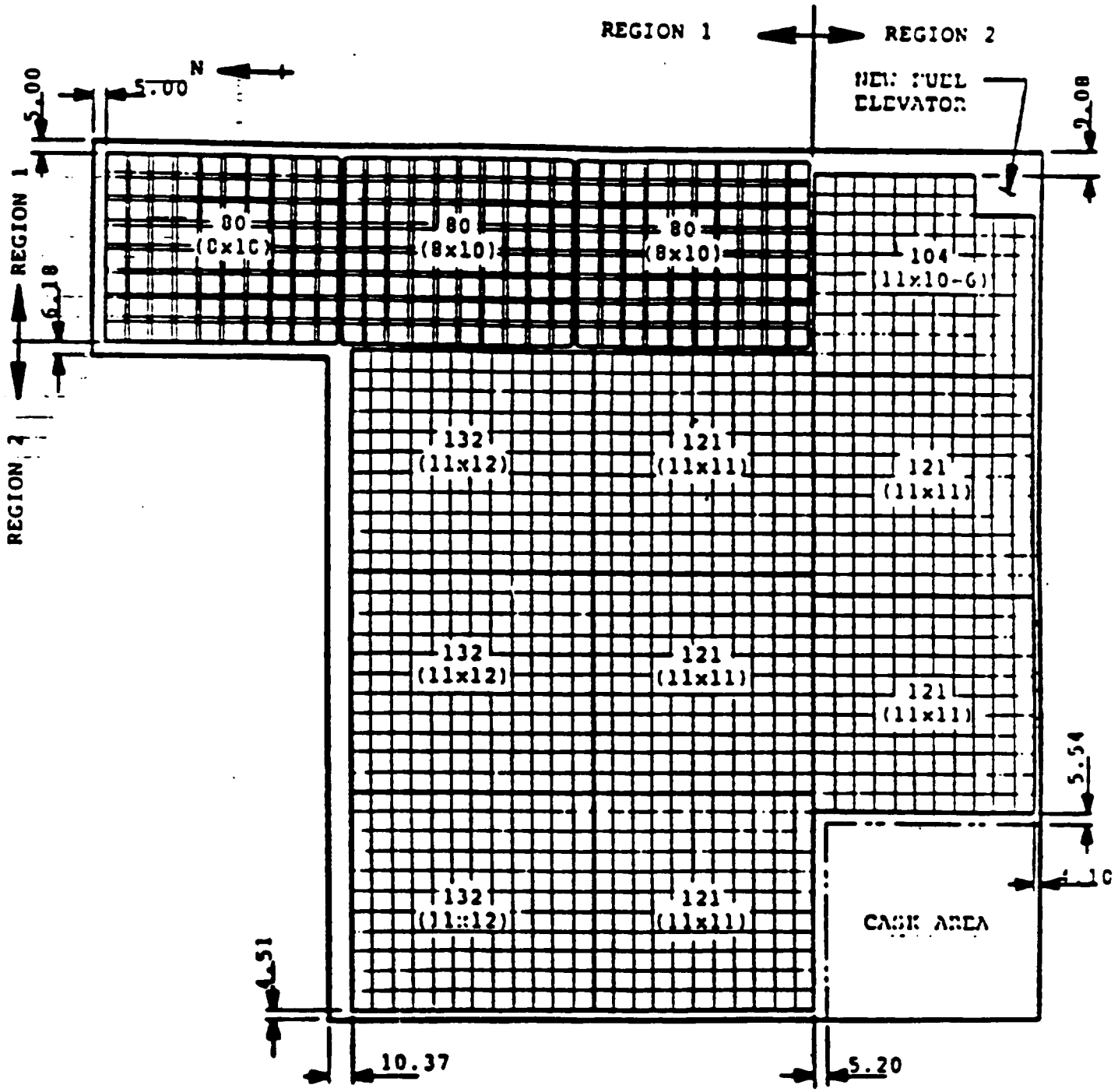

REGION 1 STORAGE = 240
REGION 2 STORAGE = 1105
TOTAL = 1345

FIGURE 2

REGION 1 STORAGE CELL GEOMETRY

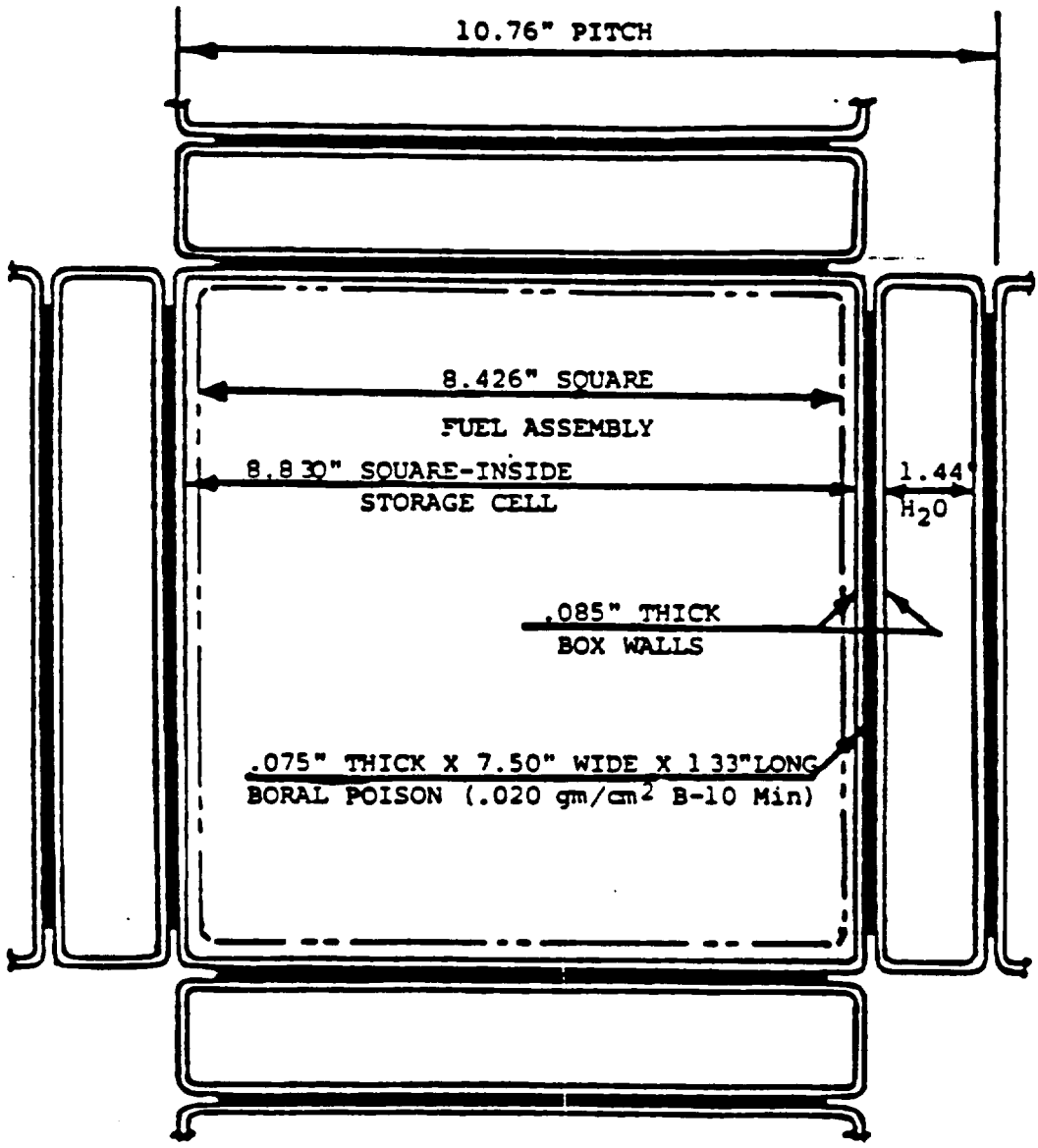

FIGURE 3

REGION 1 - RACK CELLS ELEVATION VIEW

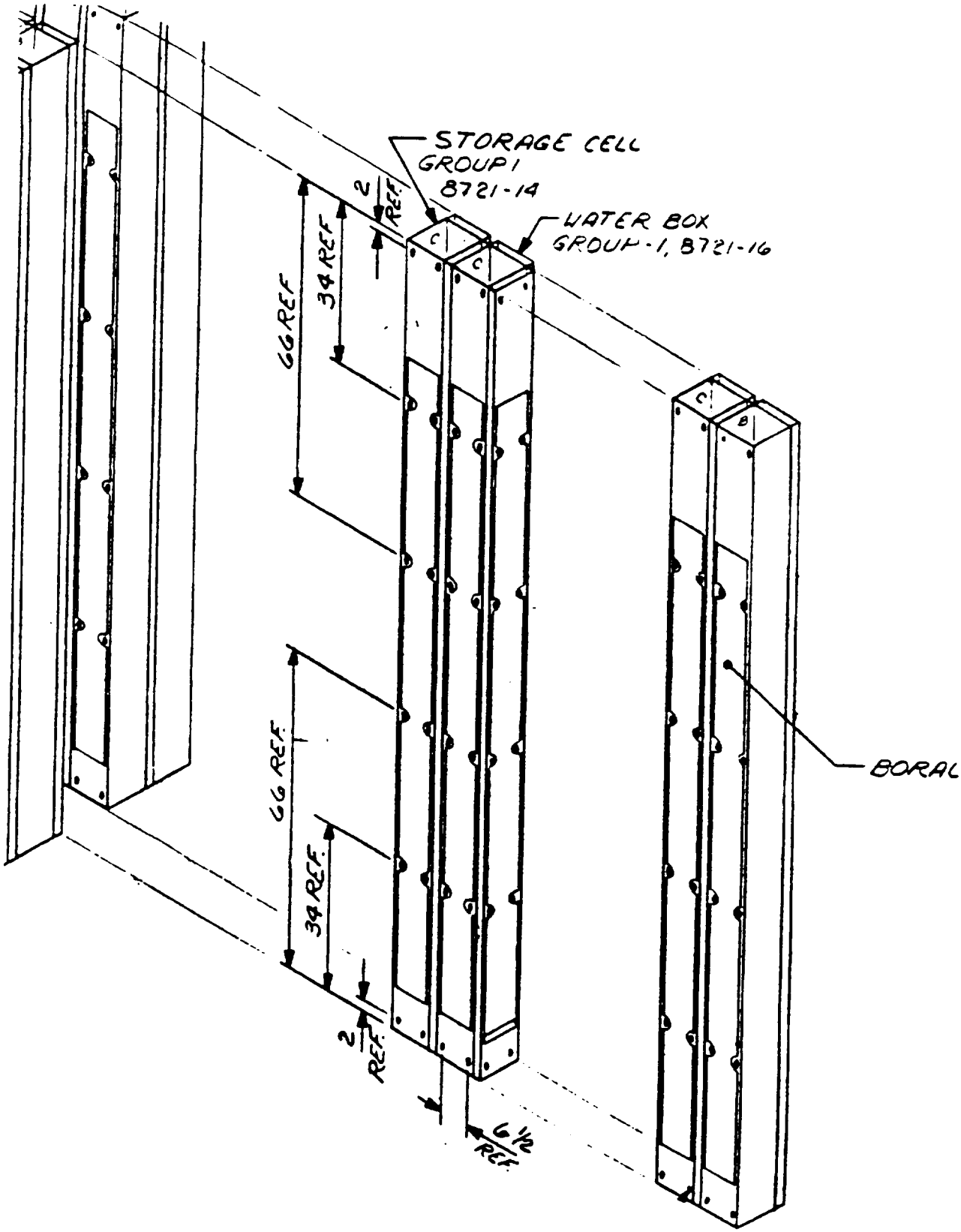

FIGURE 4

REGION 2 STORAGE CELL GEOMETRY

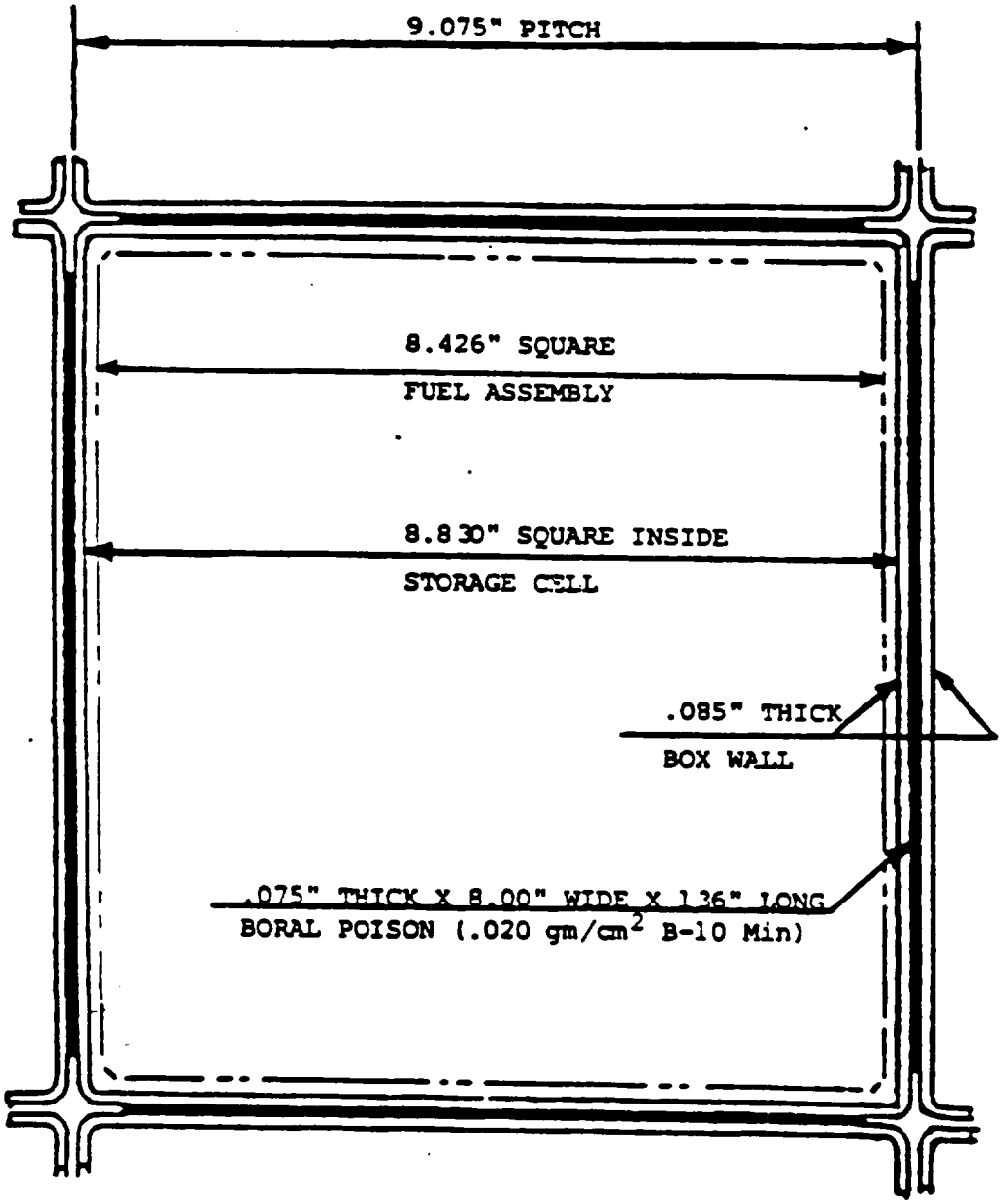

FIGURE 5

REGION 2 - RACK CELLS ELEVATION VIEW

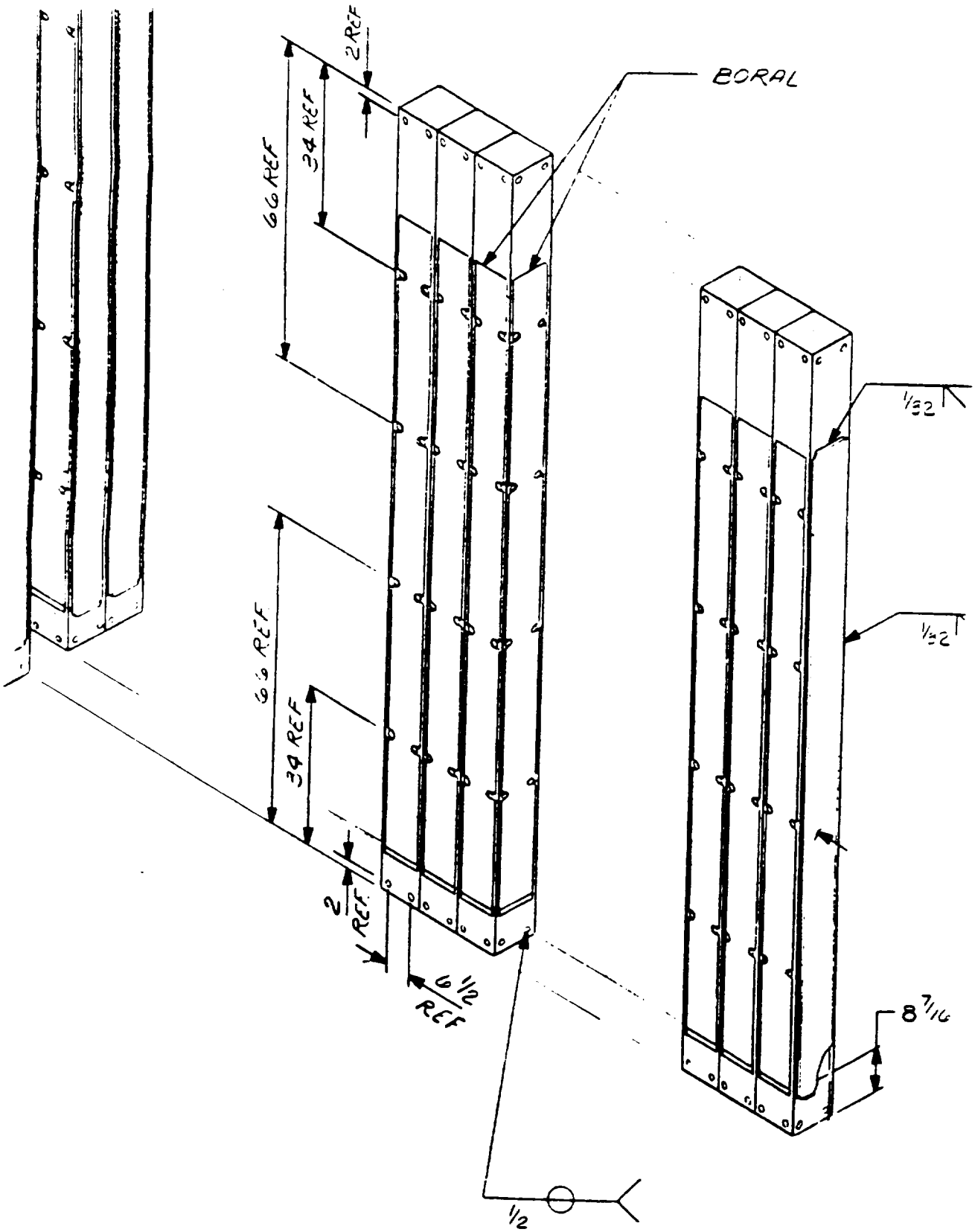

FIGURE 6

RACK PEDESTALS

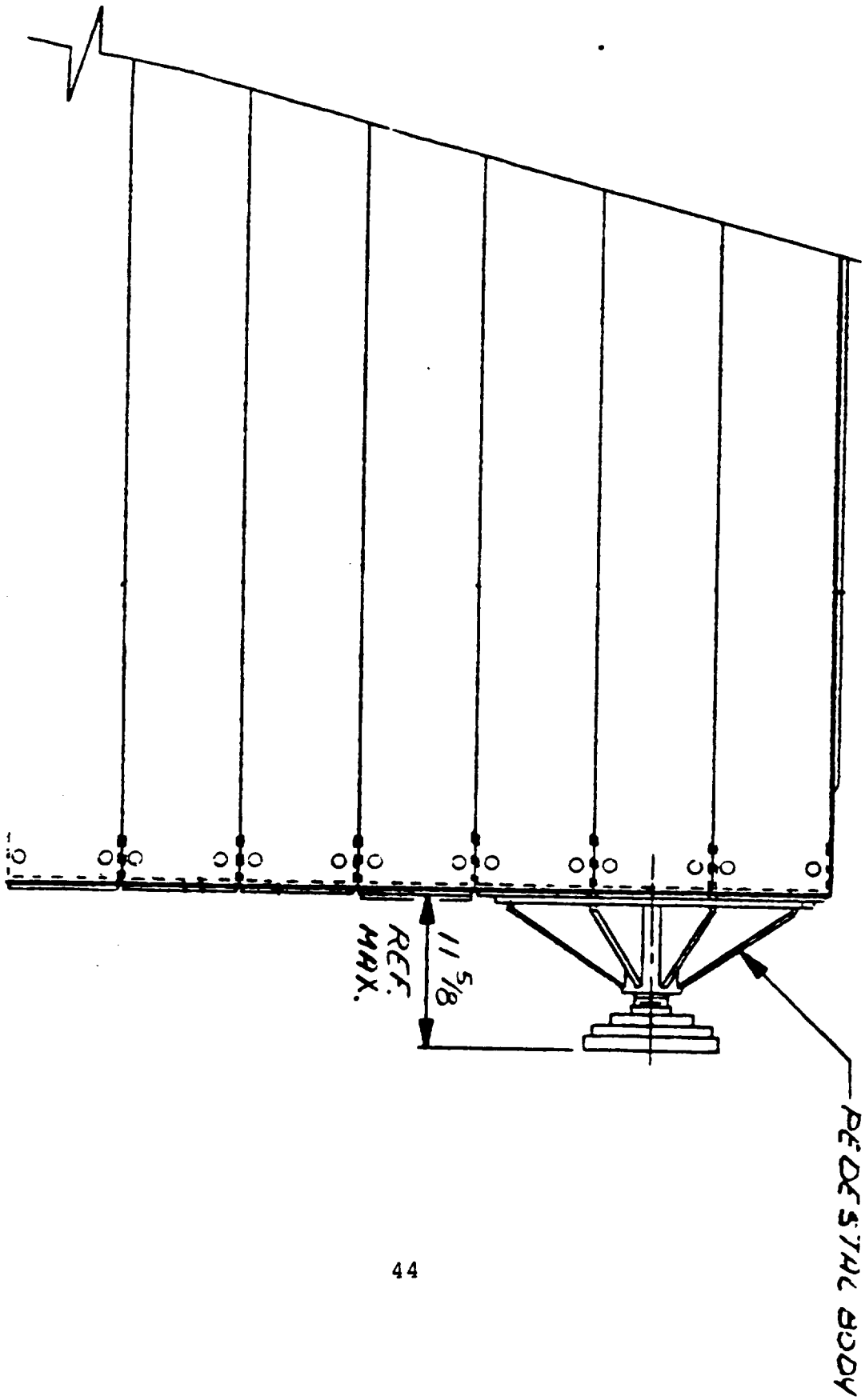

FIGURE 7

SEISMIC ANALYSIS MODEL

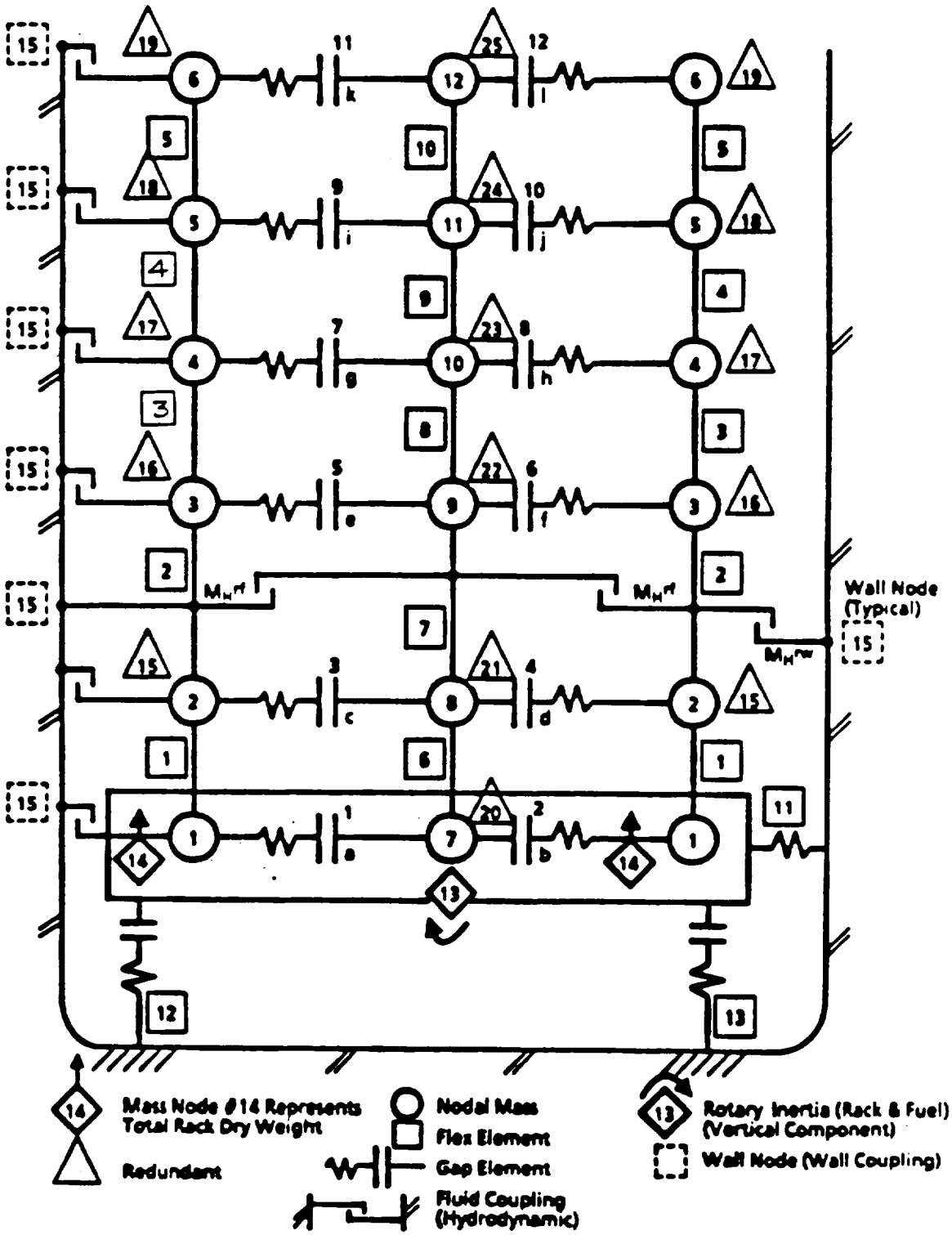

FIGURE 8

N-S SSE TIME HISTORY

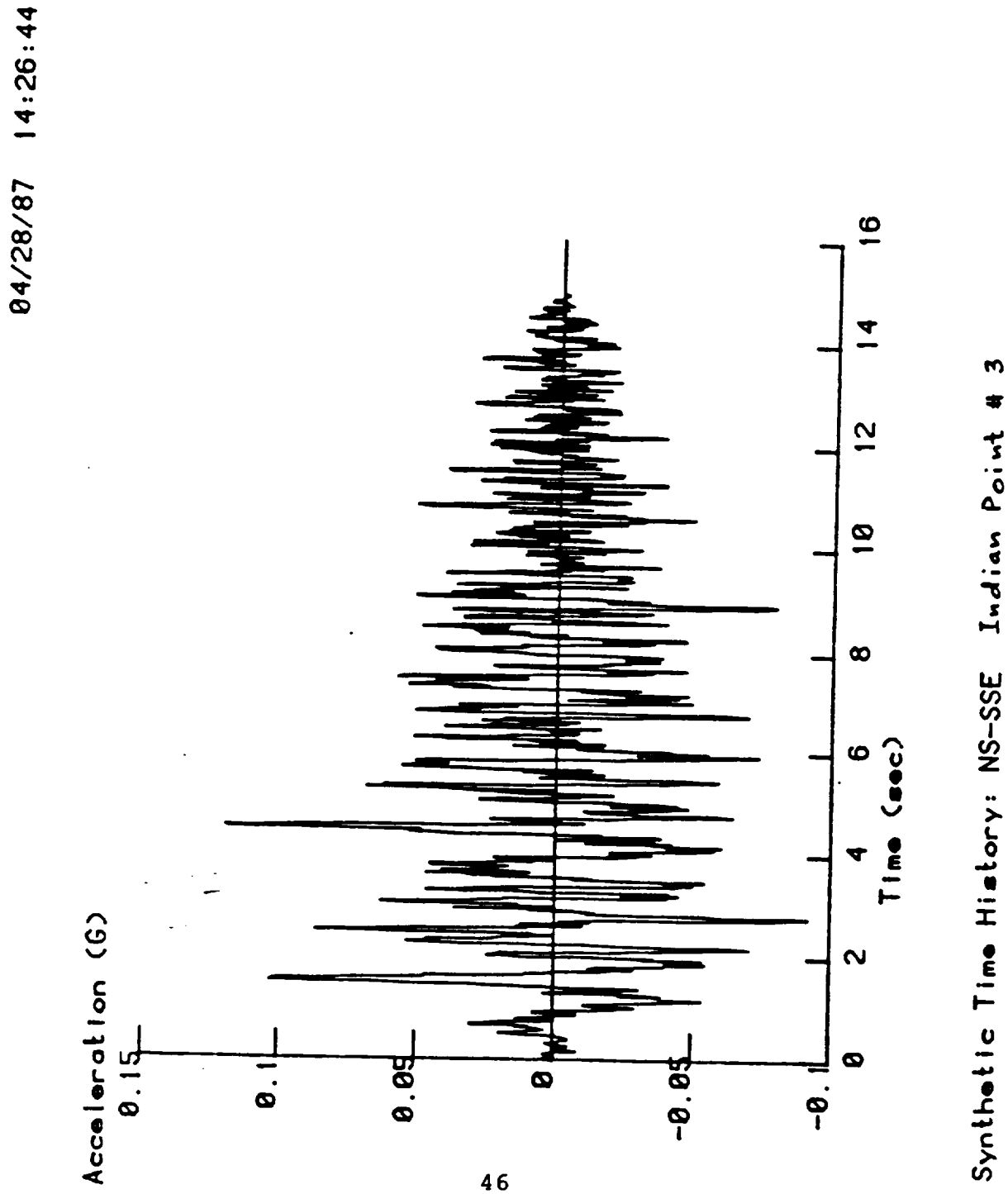

FIGURE 9

N-S SSE SPECTRUM COMPARISON

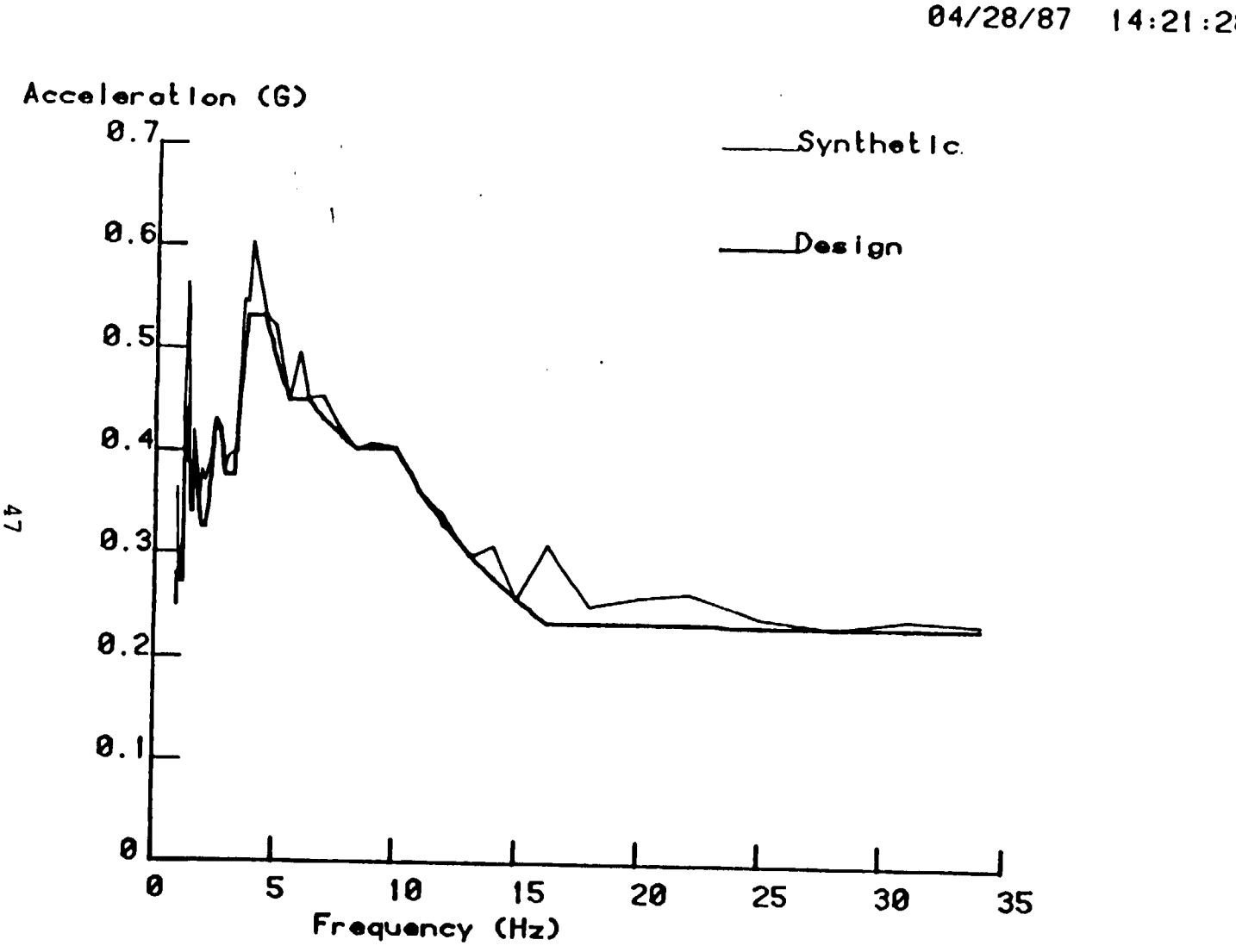

N-S SSE Spectrum Ele 54'-6" Indian Point # 3 (Fig H.1.1, 1% Damping)

FIGURE 10

E-W SSE TIME HISTORY

04/28/87 14:37:48

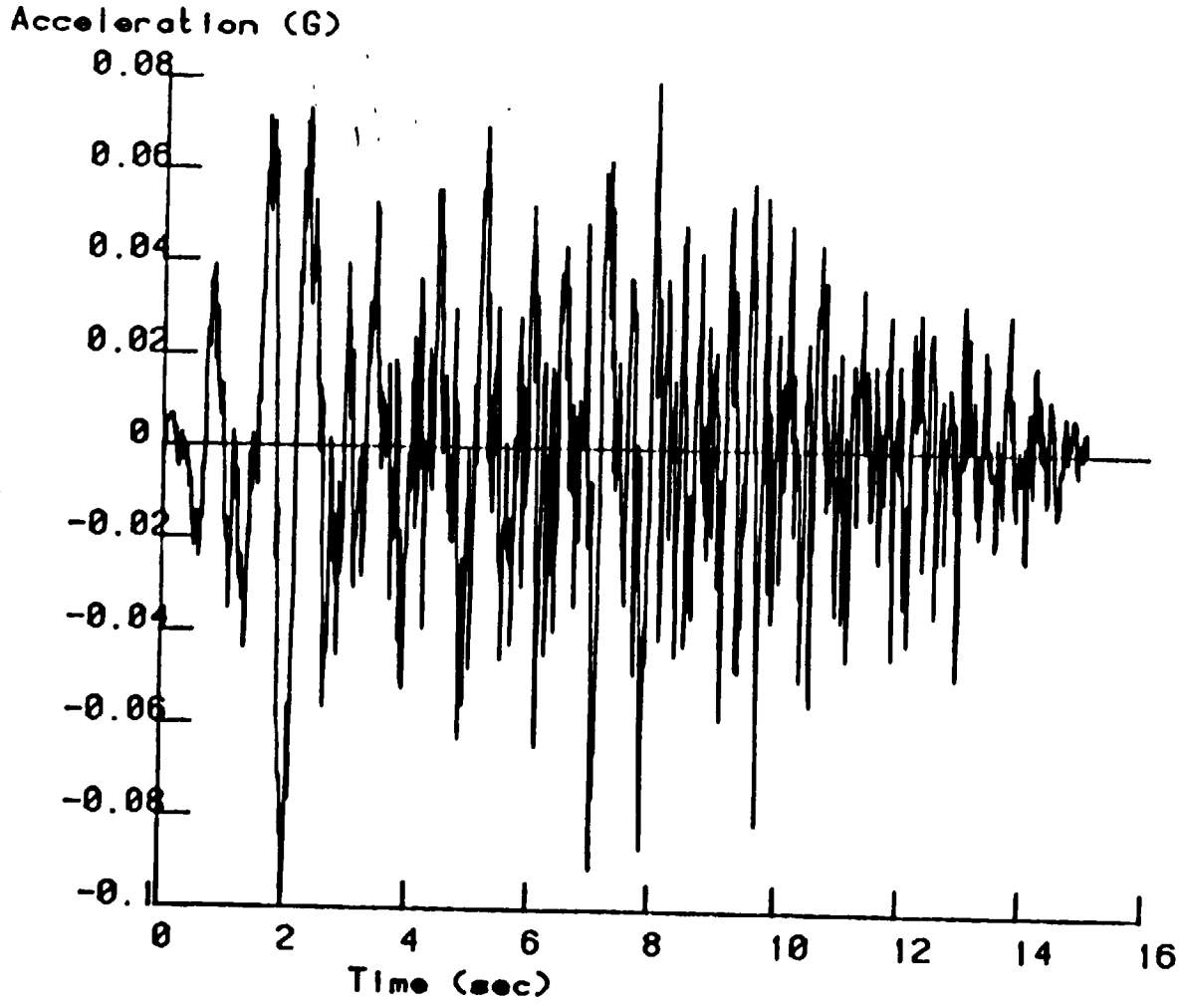

Synthetic Time History: EW-SSE Indian Point # 3

04/28/87 14:32:09

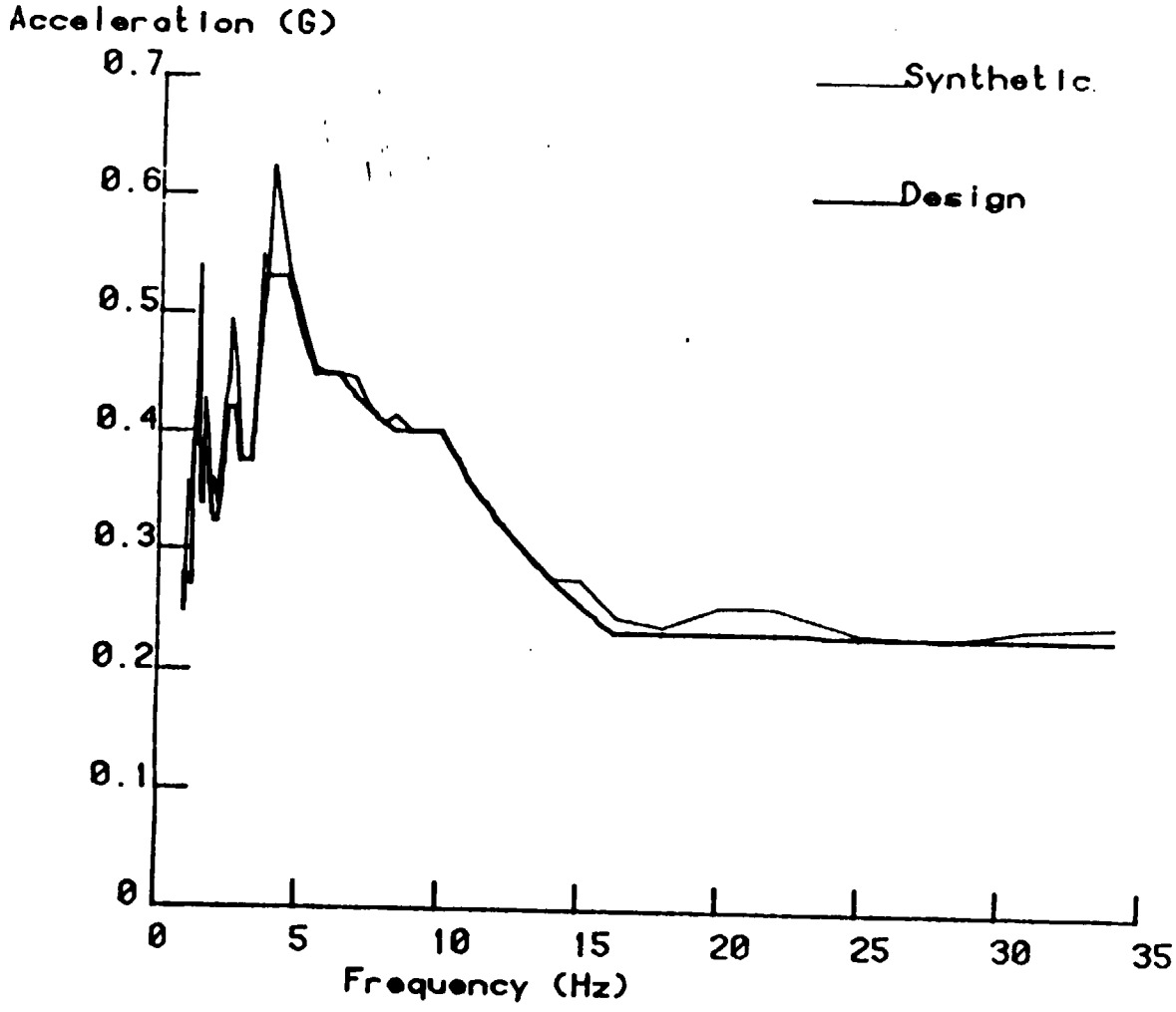

E-W SSE Spectrum Ele 54'-6" Indian Point # 3 (Fig H.3.1, 1% Damping)

FIGURE 11

E-W SSE SPECTRUM COMPARISON

FIGURE 12

REGION 1 - 80 CELL RACKS USED FOR MULTI-RACK MODEL

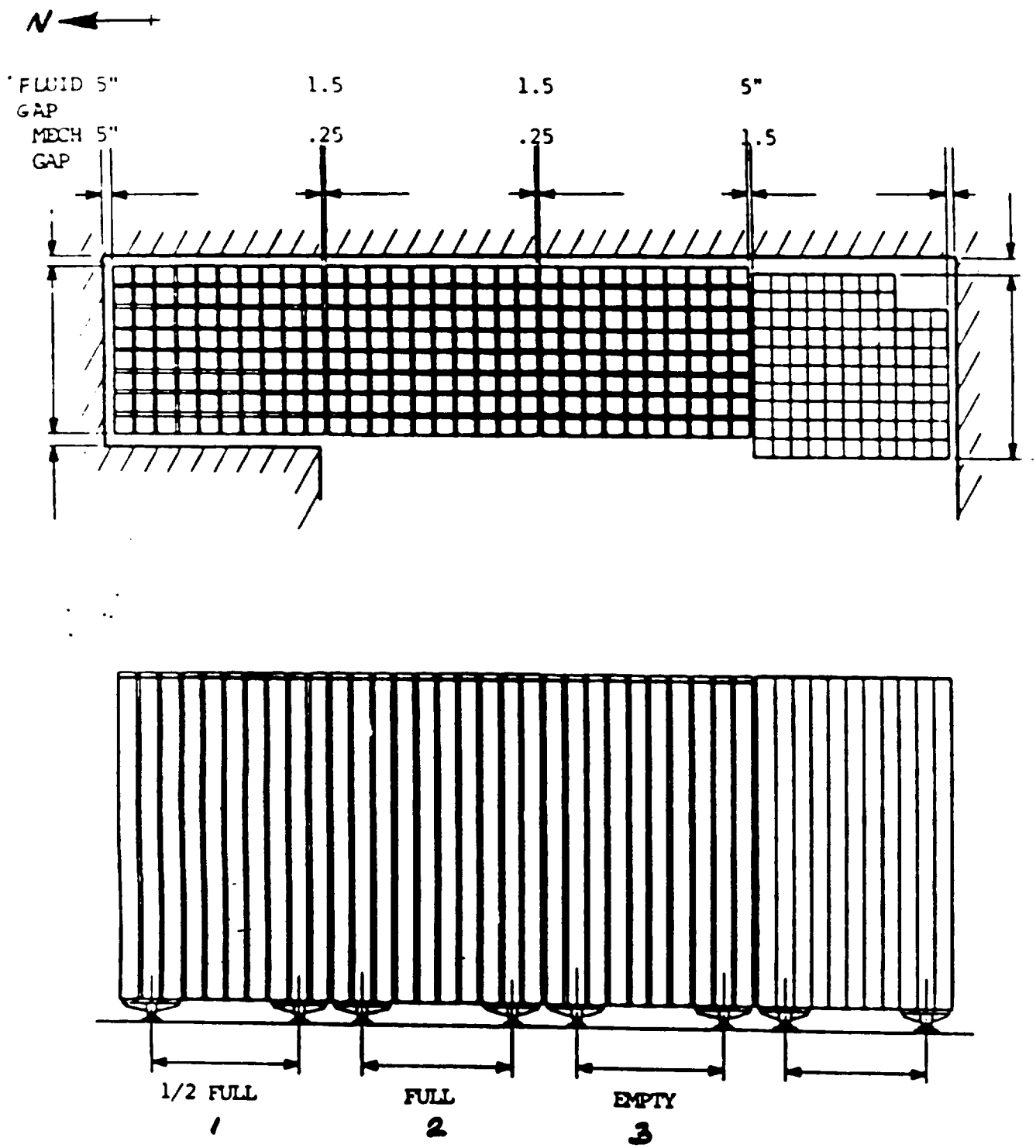

FIGURE 13

REGION 2 - 132 CELL RACKS USED FOR MULTI-RACK MODEL

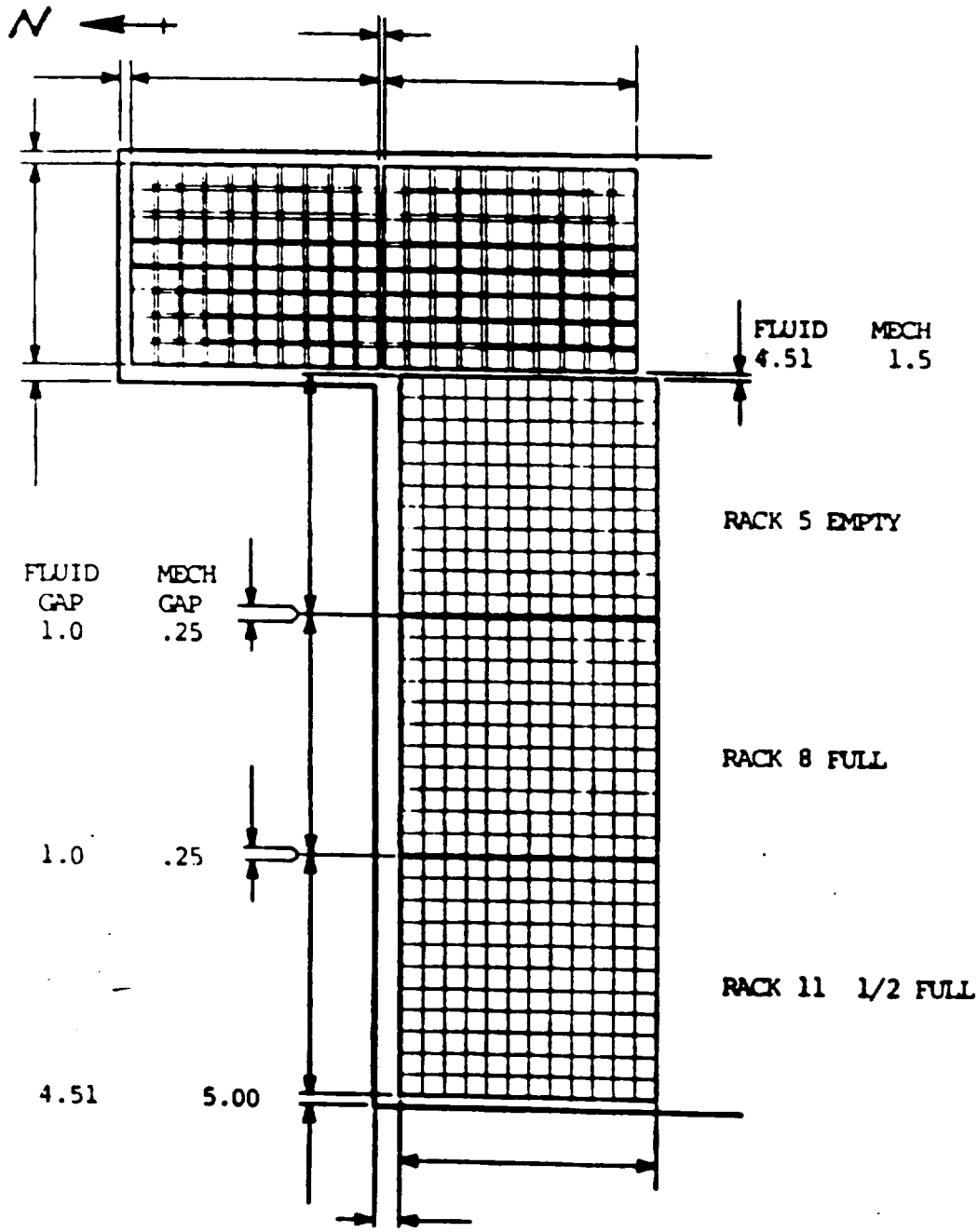

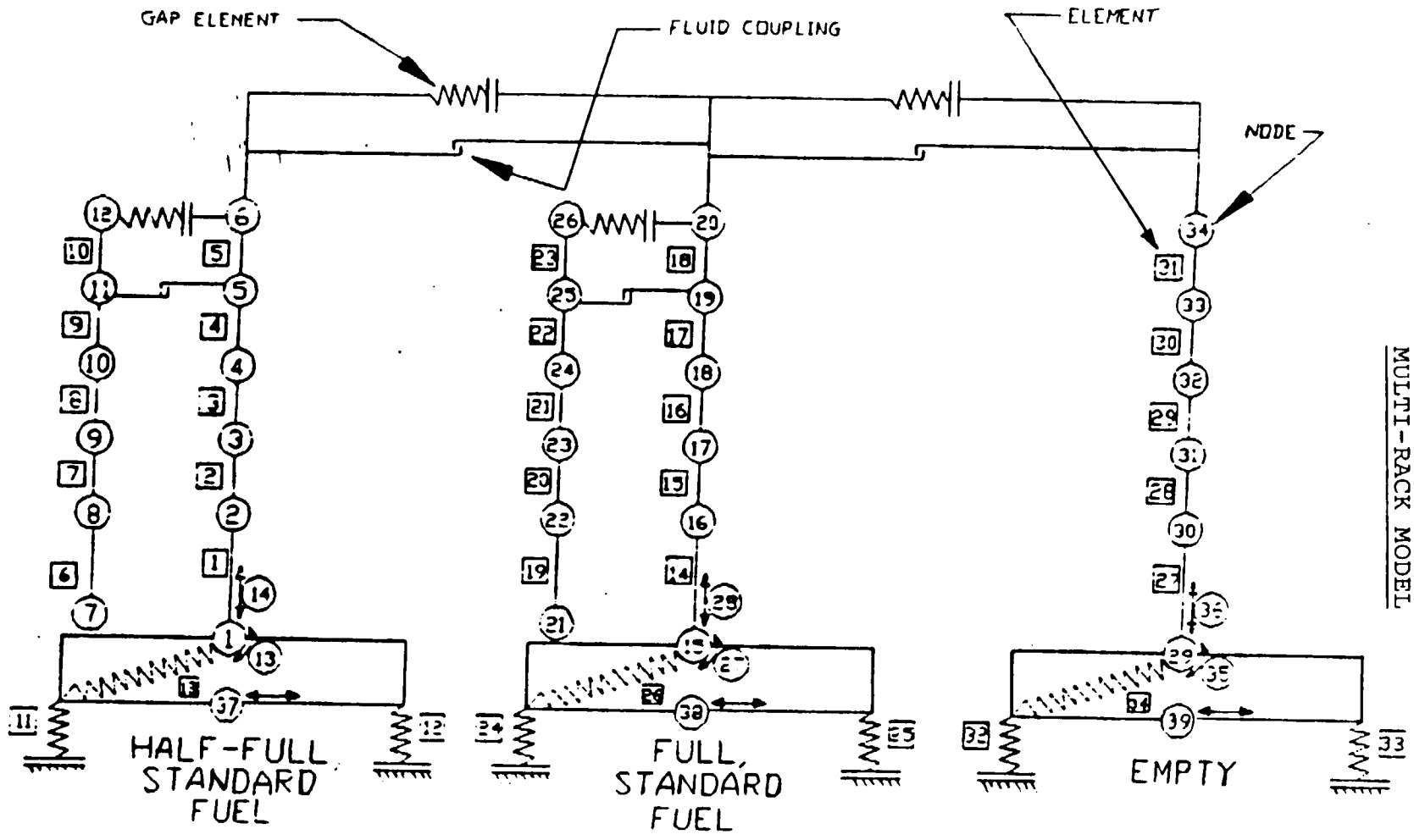

FIGURE 14

MULTI-RACK MODEL

FIGURE 15
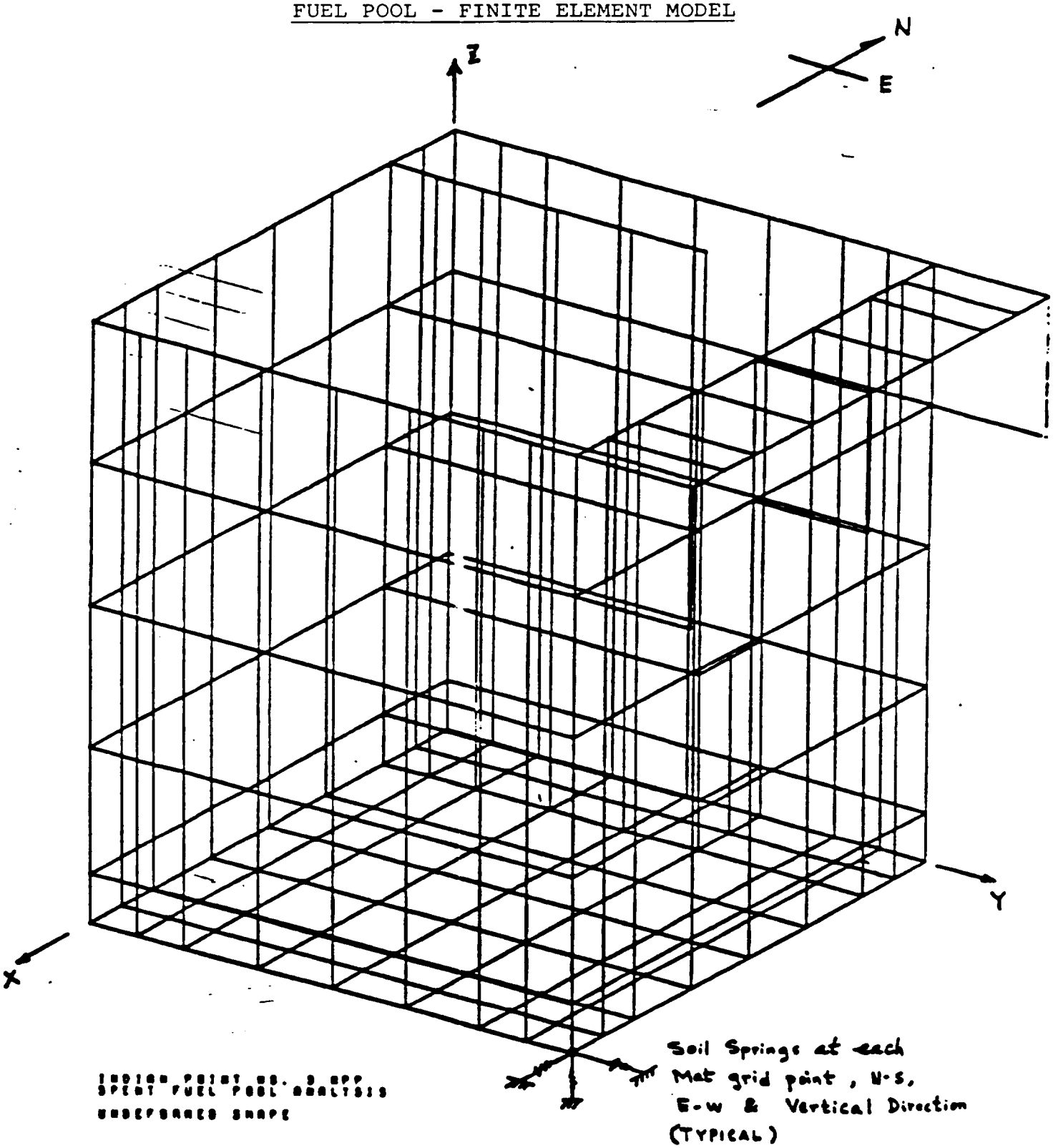
FUEL POOL - FINITE ELEMENT MODEL