DISTRIBUTION
Docket File
NRC PDR
Local PDR
ORB 1 File
D. Eisenhut
OELD
E. L. Jordan, DEQA:IE
J. M. Taylor, DRP:IE
J. Hannon
C. Parrish
NSIC
ACRS (10)
J. Heltemes
P. Polk

DEC 1 1982

Docket No. 50-247

Mr. John D. O'Toole, Vice President
Nuclear Engineering and Quality Assurance
Consolidated Edison Company
of New York, Inc.
4 Irving Place
New York, New York 10003

Dear Mr. O'Toole:

Item D.2 of our Confirmatory Order dated February 11, 1980, required an evaluation of the design difference between Units 2 and 3 in light of the present regulatory standards and requirements.

The results of your review were provided by letters dated May 9, 1980, and May 27, 1982.

The staff has completed its review of your evaluation of the design differences. We find your design acceptable. The enclosed SER documents the basis for those items that required additional information during our review.

Sincerely,

Original signed by:
S. A. Varga

Steven A. Varga, Chief
Operating Reactors Branch No. 1
Division of Licensing

Enclosure:
Updated Evaluation of Differences
Between Indian Point Units 2 and 3

cc w/enclosures:
See next page

8212080569 821201
PDR ADOCK 05000247
P PDR

OFFICE	ORB 1	ORB 1	DSI				
SURNAME	JHannon/rs	SVarga	LRubenstein				
DATE	10/ /82	10/ /82	10/ /82				

12/1/82

NRC FORM 318 (10-80) NRCM 0240 OFFICIAL RECORD COPY USGPO: 1981—335-960

Mr. John D. O'Toole
Consolidated Edison Company of New York, Inc.

cc:

Joseph D. Block, Esquire
Executive Vice President
Administrative
Consolidated Edison Company
of New York, Inc.
4 Irving Place
New York, New York 10003

Thomas J. Farrelly, Esquire
Law Department
Consolidated Edison Company
of New York, Inc.
4 Irving Place
New York, New York 10003

Louis F. Liberatori
Nuclear Licensing Engineer
Consolidated Edison Company
of New York, Inc.
4 Irving Place
New York, New York 10003

Dr. Lawrence R. Quarles
Apartment 51
Kendal at Longwood
Kennett Square, Pennsylvania 19348

Theodore A. Rebelowski
Resident Inspector
U. S. Nuclear Regulatory Commission
P. O. Box 38
Buchanan, New York 10511

Ezra I. Bialik
Assistant Attorney General
Environmental Protection Bureau
New York State Department of Law
2 World Trade Center
New York, New York 10047

Ms. Ellyn Weiss
Sheldon, Harmon and Weiss
1725 I Street, N.W.
Suite 506
Washington, D. C. 20006

Mr. Charles W. Jackson
Vice President, Nuclear Power
Consolidated Edison Company
of New York, Inc.
Broadway and Bleakley Avenues
Buchanan, New York 10511

Mr. Kevin Burke
Director, Regulatory Affairs
Consolidated Edison Company
of New York, Inc.
Broadway and Bleakley Avenues
Buchanan, New York 10511

Mr. Frank Matra
Resident Construction Manager
Consolidated Edison Company
of New York, Inc.
Broadway and Bleakley Avenues
Buchanan, New York 10511

Brent L. Brandenburg
Assistant General Counsel
Consolidated Edison Company
of New York, Inc.
4 Irving Place - 1822
New York, New York 10003

Joan Holt, Project Director
New York Public Interest
Research Group, Inc.
5 Beekman Street
New York, New York 10038

Ronald C. Haynes
Regional Administrator - Region I
U. S. Nuclear Regulatory Commission
631 Park Avenue
King of Prussia, Pennsylvania 19406

ENCLOSURE

UPDATED EVALUATION OF DIFFERENCES BETWEEN INDIAN POINT UNITS 2 AND 3

Introduction

An NRC confirmatory order, dated February 11, 1980, required the licensees (Consolidated Edison and the Power Authority of the State of New York) to "jointly review and identify significant differences between Indian Point Unit 2 and Unit 3" and "evaluate these differences in light of present regulatory standards and requirements. Consolidated Edison shall provide a justification for the design differences or shall recommend design changes." The licensees, in response to this confirmatory order performed a functional review of existing plant structures and systems required for reactor protection or engineered safeguards or whose failure would result in Part 100 type events.

As a result of the licensee's functional review, a number of differences between Indian Point Units 2 and 3 were identified as documented in a May 9, 1980 transmittal by the licensee. The following differences required additional information during the course of our review and are the subject of this Safety Evaluation Report. These differences include Diesel Fuel Oil Transfer, Electrical Separation, 480 volt AC, 125 volt DC, 120 volt AC, and Protection Logic. The objective of this evaluation is to determine, for each identified difference, the sufficiency of either the licensee's justification for the existing design or the licensee's recommended design changes.

Subsequently, the licensee, by letter dated May 27, 1982, provided additional description and justification for some of the differences between Indian Point Unit 2 and 3. The additional description and justification has been incorporated into this updated evaluation.

Evaluation

1. Functional Routing of Cables

   At Indian Point Unit 3, protection system instrument cables are divided into four channels with a separate raceway system provided for each channel. Engineered safeguards power and control cables are divided into three basic channel systems with a separate raceway system provided for each channel. Also reactor trip and containment isolation power and control cables are divided into two channels with a separate raceway system provided for each channel.

   At Unit 2, it was unclear as to the number of raceway systems provided to maintain channel separation. The licensee has documented that "separation is provided on a function by function basis. There is a minimum two channel raceway throughout with a third or fourth raceway provided at points where required." In addition, our Fire Protection

Safety Evaluation Report has documented that "the reactor protection and engineered safety system cable circuits are divided into as many channels as is required to preserve the basic redundancy and independence of the systems." Based on this documented information, it appears that only two separate raceway systems are provided at Unit 2 for the three engineered safeguards channels while Unit 3 has three separate raceway systems, one for each channel.

Subsequently by letter dated May 27, 1982, the licensee further described the cable routing at Indian Point Unit 2. Figure 1 (of our October 21, 1981 evaluation of the differences identified between Units 2 and 3) has been revised (Figure 1A) to describe the routing of cables at Unit 2. Based on a review of the described routing, the staff concludes that while a single failure of a raceway or cable may cause failure of the A and C division or the B and C division, one division of three will remain for safe shutdown.

In addition an alternate safe shutdown system is presently installed at Unit 2 for fire protection. This alternate shutdown system will be further upgraded as a result of plant modifications to meet the requirements of Appendix R of 10 CFR 50. If this Appendix R review identifies areas where all three cable routing divisions can be disabled, adequate alternate shutdown measures will be required.

2. Automatic Transfer of DC Loads Between Redundant Power Sources

With implementation of the proposed modification to the Unit 2 125 volt DC system shown in Figure 4, a difference remains between Unit 2 and 3. Diesel generator and 480 volt switchgear control power loads for Unit 2 are automatically transferred between redundant power sources. In justification of this difference, the licensee has indicated that both Unit 3 and the proposed Unit 2 design satisfy the requirements of Regulatory Guide 1.6.

Based on our review of both Unit 2 and Unit 3 designs, we agree with the licensee's justification in regard to Unit 3 but must examine more closely for Unit 2 the position D.4.c of Regulatory Guide 1.6 which states: "No provisions should exist for automatically transferring loads between redundant power sources." The proposed Unit 2 design makes provision for automatically transferring loads between redundant power sources as shown in Figure 4.

A single failure of the automatic transfer function could cause the loss of a diesel generator and a 480V safeguards bus. However, this is essentially the same result for a single failure without automatic transfer. Thus, the alternate design for Unit 2 is acceptable, since the worst case single failure yields the same result in both designs.

3. A Single Backup AC Power Source for Each of Four Instrument Buses

In order to describe the difference between the 120 volt AC instrument distribution system at Unit 2 and 3, a simplified diagram of each units existing 120 volt AC system is presented in Figures 5 and 6.

The Unit 3 design, shown in Figure 5, is being upgraded to power all four instrument buses from separate battery banks and inverters. With all four instrument buses being powered from separate batteries and inverters, the Unit 2 and Unit 3 design difference will be eliminated except for one remaining difference between Unit 2 and 3. Unit 3 has a single alternate source of backup AC power to all instrument buses while each instrument bus at Unit 2 has its own backup AC power source.

In justification of this remaining difference, the licensee stated that both Unit 2 and the proposed Unit 3 designs meet present criteria.

We disagree with this justification. The single backup AC power source for the four instrument buses in Unit 3 with no restrictions on number of buses that can be simultaneously connected or definitive limiting conditions for operation does not meet present criteria.

By letter dated May 27, 1982, the licensee indicated that the Indian Point 3 Technical Specifications permits only one of the four 118 VAC vital instrument buses to be supplied from the backup AC power source during unit operation. This Technical Specification limitation meets current staff requirements and is acceptable.

4. Concurrent Undervoltage and Safety Injection or Unit Trip Signals Needed to Connect Onsite Power to Class IE Loads

AC power from the Unit 3 diesel generators is automatically connected to the 480 volt buses on an undervoltage signal. For Unit 2, AC power from the diesel generators is automatically connected to the 480 volt buses on an undervoltage signal concurrent with SI or unit (turbine) trip signal. Unit 2 is different in that the additional coincident SI or unit trip signal is required.

In justification of this design difference, the licensee stated that both designs meet present criteria. We disagree with this justification. The Unit 2 design using a non-Class 1E unit trip signal to perform a Class 1E function, does not meet the single failure criteria and present NRC review guidelines (section 8.3.1, Part III, item 2 and section 7.3, Appendix A, item 3.a of NRC Standard Review Plan).

By letter dated May 27, 1982, the licensee provided additional justification. This justification indicated that failure of the non-Class 1E trip signal provided negligible contribution to the unavailability of AC power and will not preclude the manual starting and loading of the diesel generators. In addition, water inventory in the steam generators was indicated to be sufficient to provide reactor core cooling for one-half hour of time and with operation of the steam driven auxiliary feedwater pump for which no AC power is required, sufficient additional time will be available for manual starting and loading of the diesel generators. Based on this justification, the staff concludes that the Unit 2 design (of coincident undervoltage and turbine trip signals needed to transfer from offsite to onsite power) is sufficient and is, therefore, acceptable.

5. Each of Two Sequencing Logics Providing Actuation Signals to Redundant Class 1E Loads

Loads are automatically sequenced on to each diesel generator by sequencing logic circuitry at both Units 2 and 3. The Sequencing logic is actuated by an A and/or B train actuation logic signal. At Unit 3 the A train actuation signal starts the A train divisional sequencer, the B train signal starts B sequencer, and either A or B train signals start C train sequencer. Unit 2 is different in that either A or B train actuation signal starts the A, B, and C sequencers.

Based on the above revised description of the difference between Units 2 and 3, included with the licensee's May 27, 1982 transmittal, the staff agrees with the licensees conclusion that both Unit 2 and 3 designs meets current regulatory guidelines and is, therefore, sufficient.

FIGURE # 1

SIMPLIFIED DIAGRAM OF DESIGN DIFFERENCES OF THE 480 VOLT AC DISTRIBUTION SYSTEM BETWEEN INDIAN POINT UNITS 2 AND 3

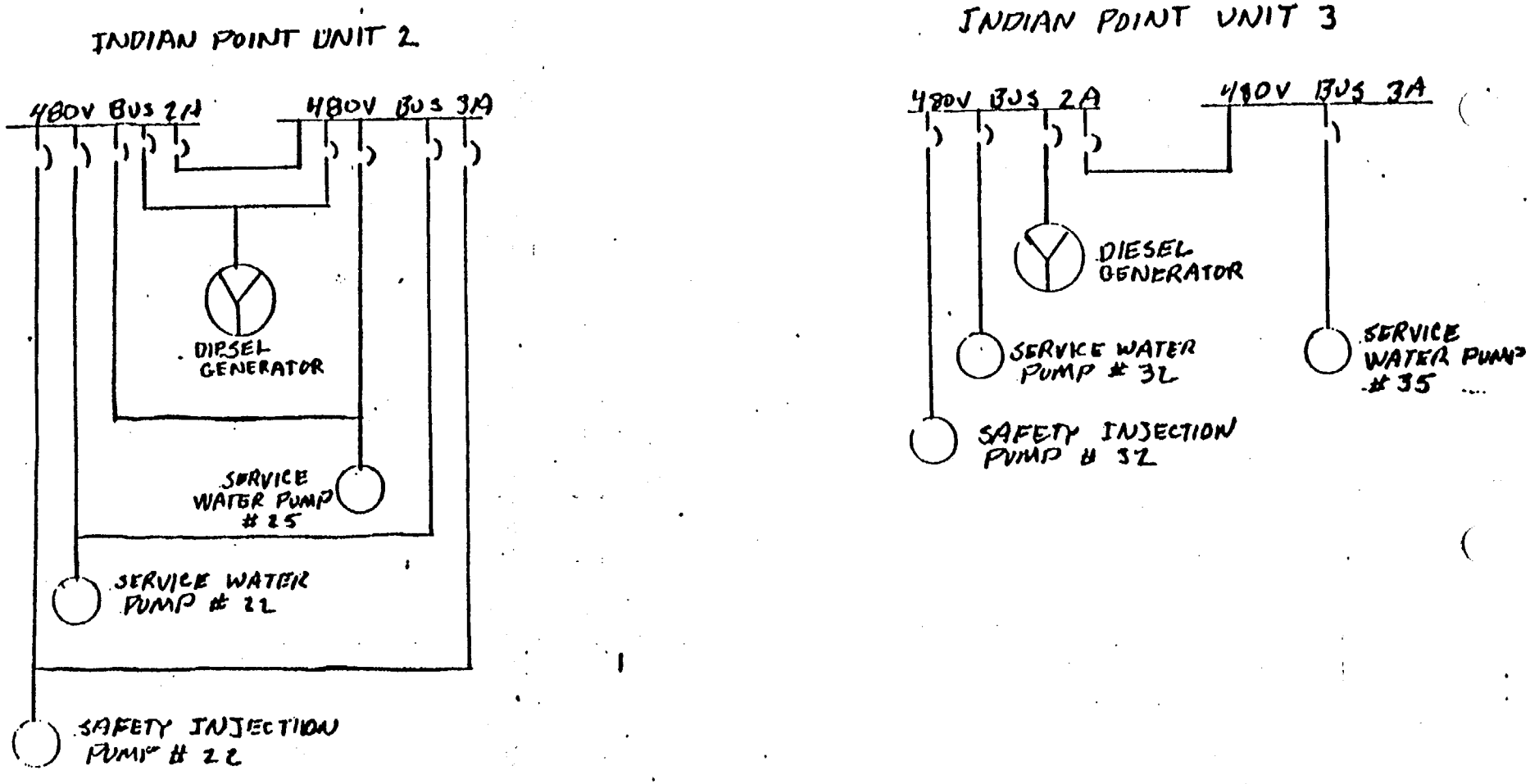

FIGURE # 1 A

SIMPLIFIED DIAGRAM OF DESIGN DIFFERENCES OF THE 480 VOLT AC DISTRIBUTION SYSTEM BETWEEN INDIAN POINT UNITS 2 AND 3

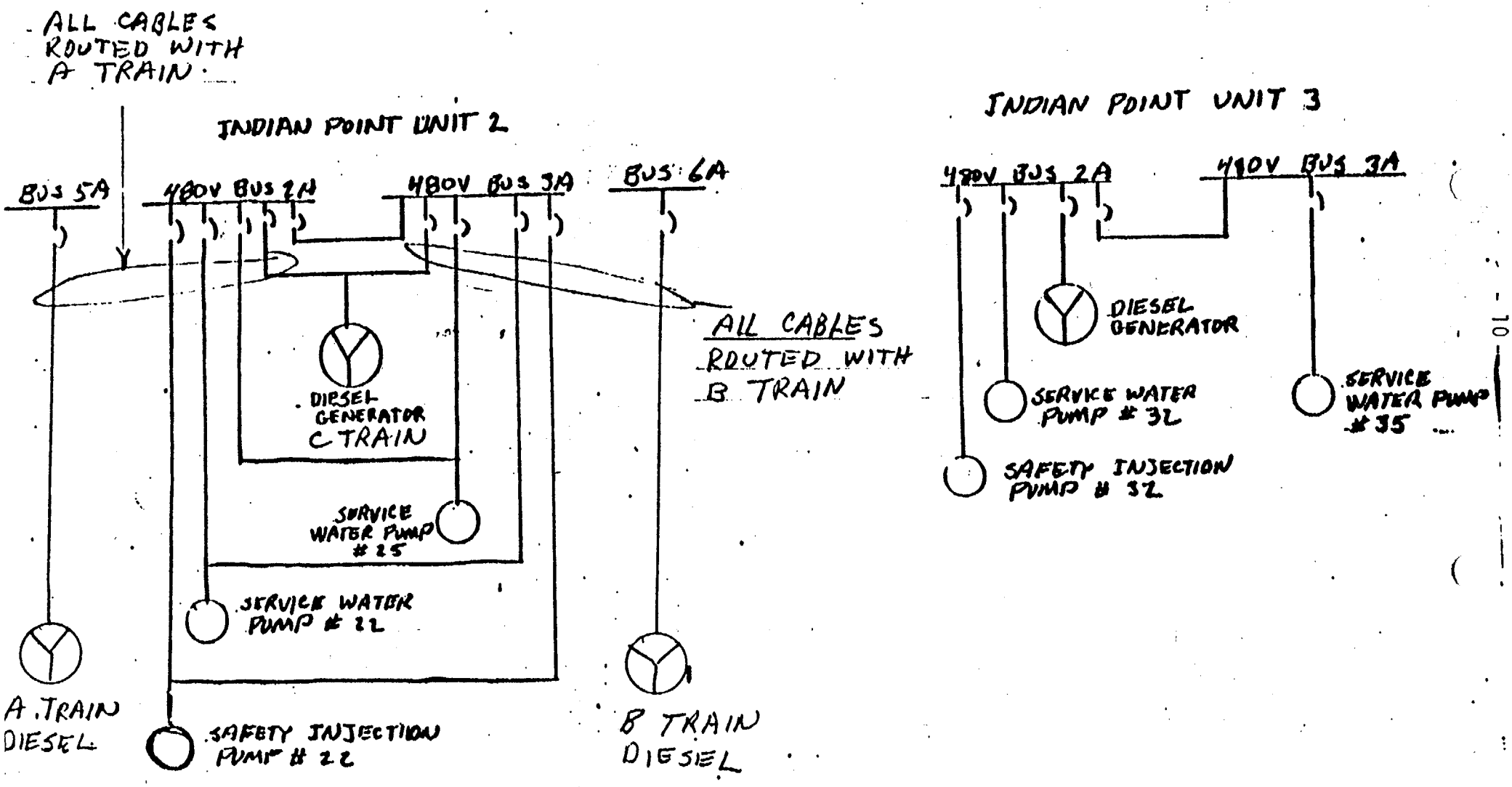

FIGURE 4

SIMPLIFIED DIAGRAM OF INDIAN POINT UNIT 2 PROPOSED 125V DC DISTRIBUTION SYSTEM

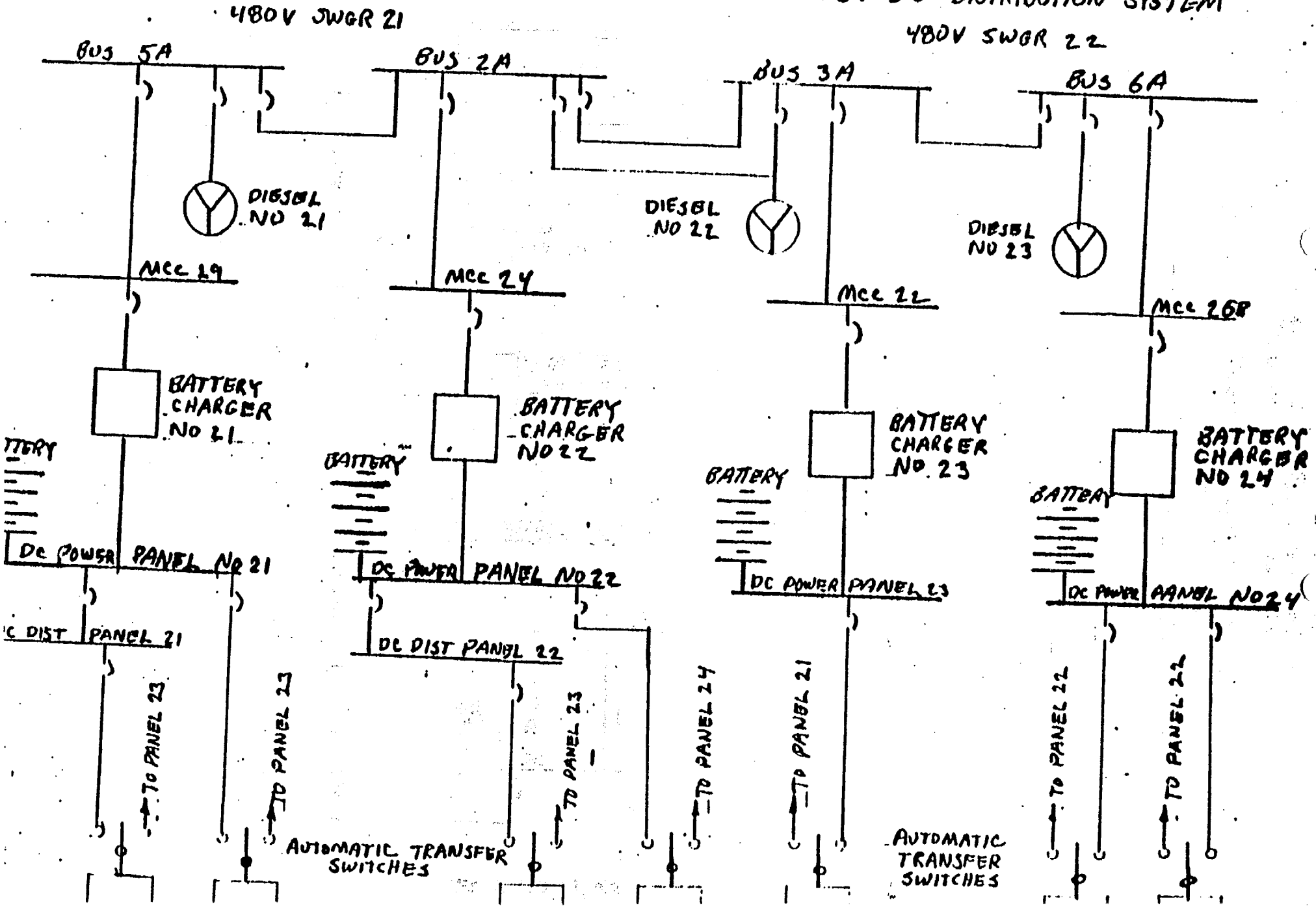

FIGURE 4

SIMPLIFIED DIAGRAM OF INDIAN POINT UNIT 2 PROPOSED 125V DC DISTRIBUTION SYSTEM

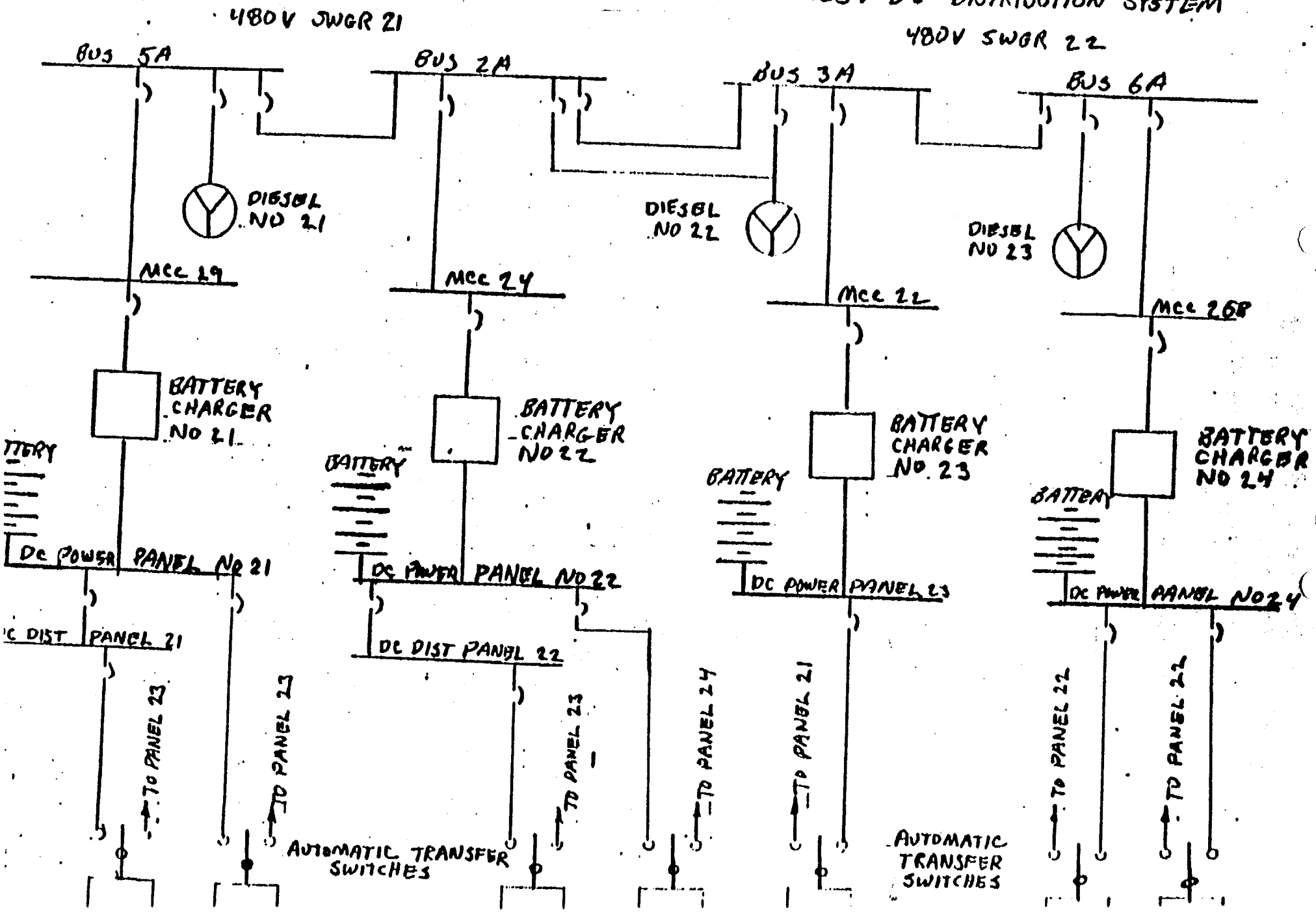

SIMPLIFIED DIAGRAM OF INDIAN POINT UNIT 3 125V DC DISTRIBUTION SYSTEM

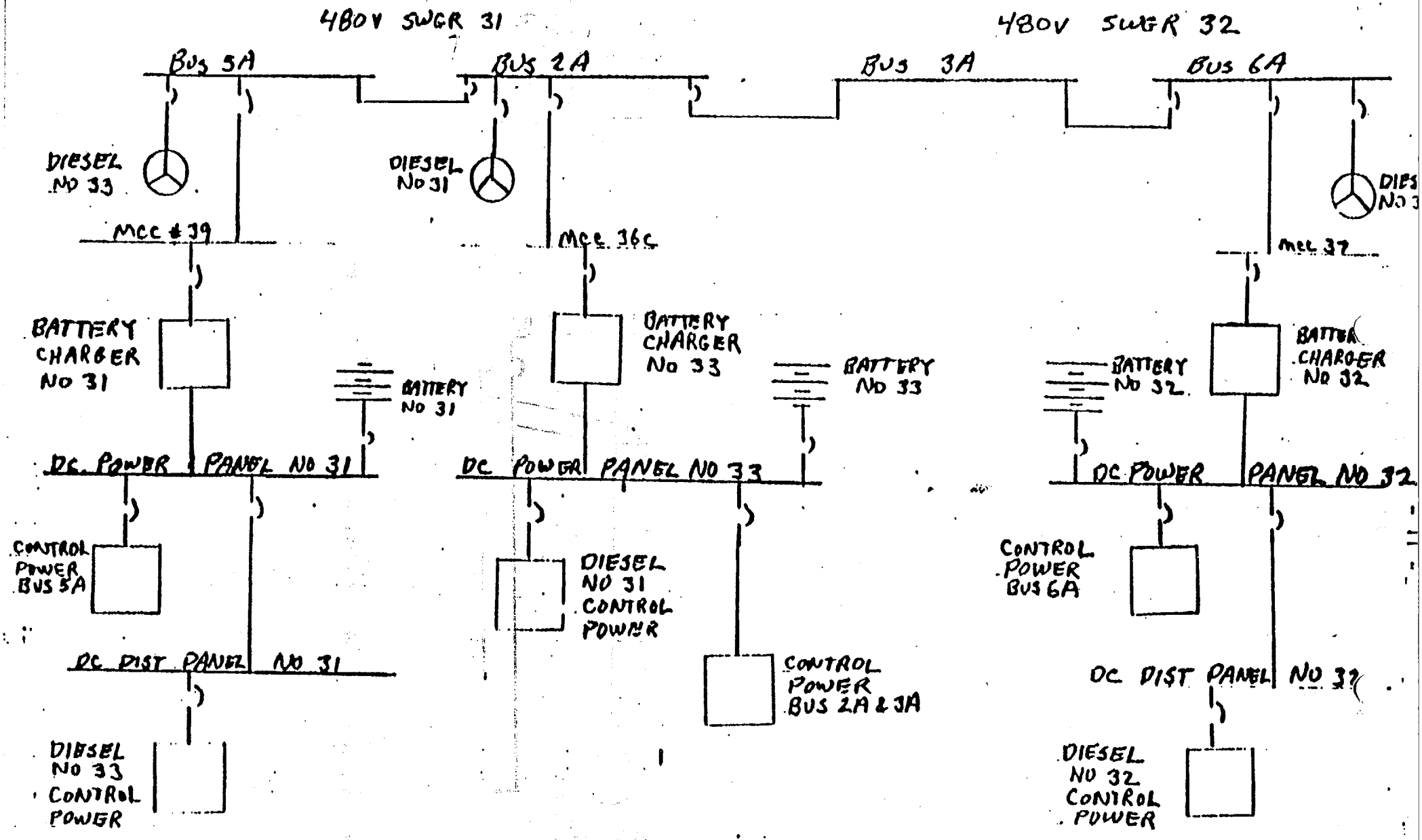

SIMPLIFIED DIAGRAM OF INDIAN POINT UNIT 3 120VOLT AC INSTRUMENT DISTRIBUTION SYSTEM

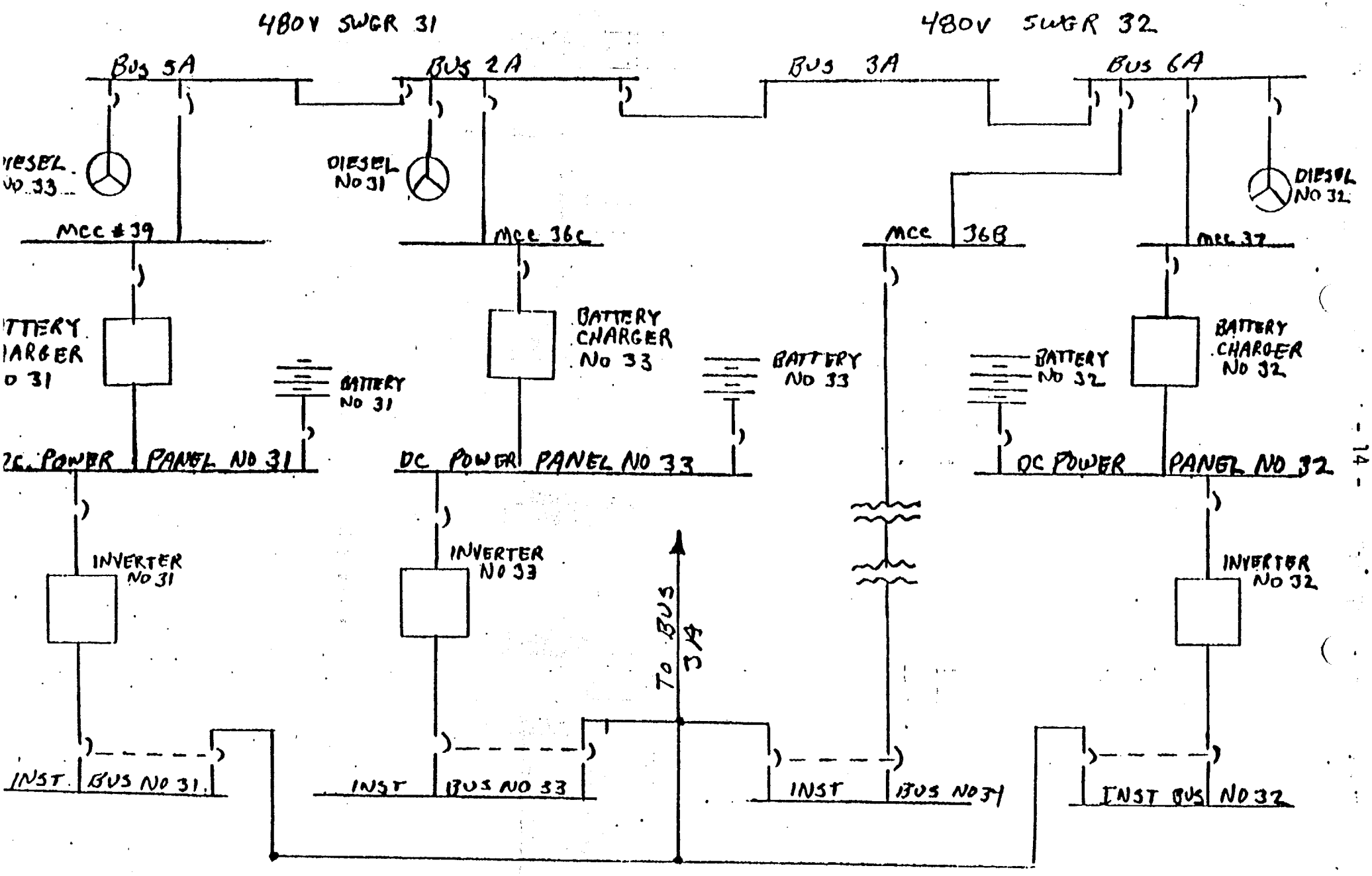
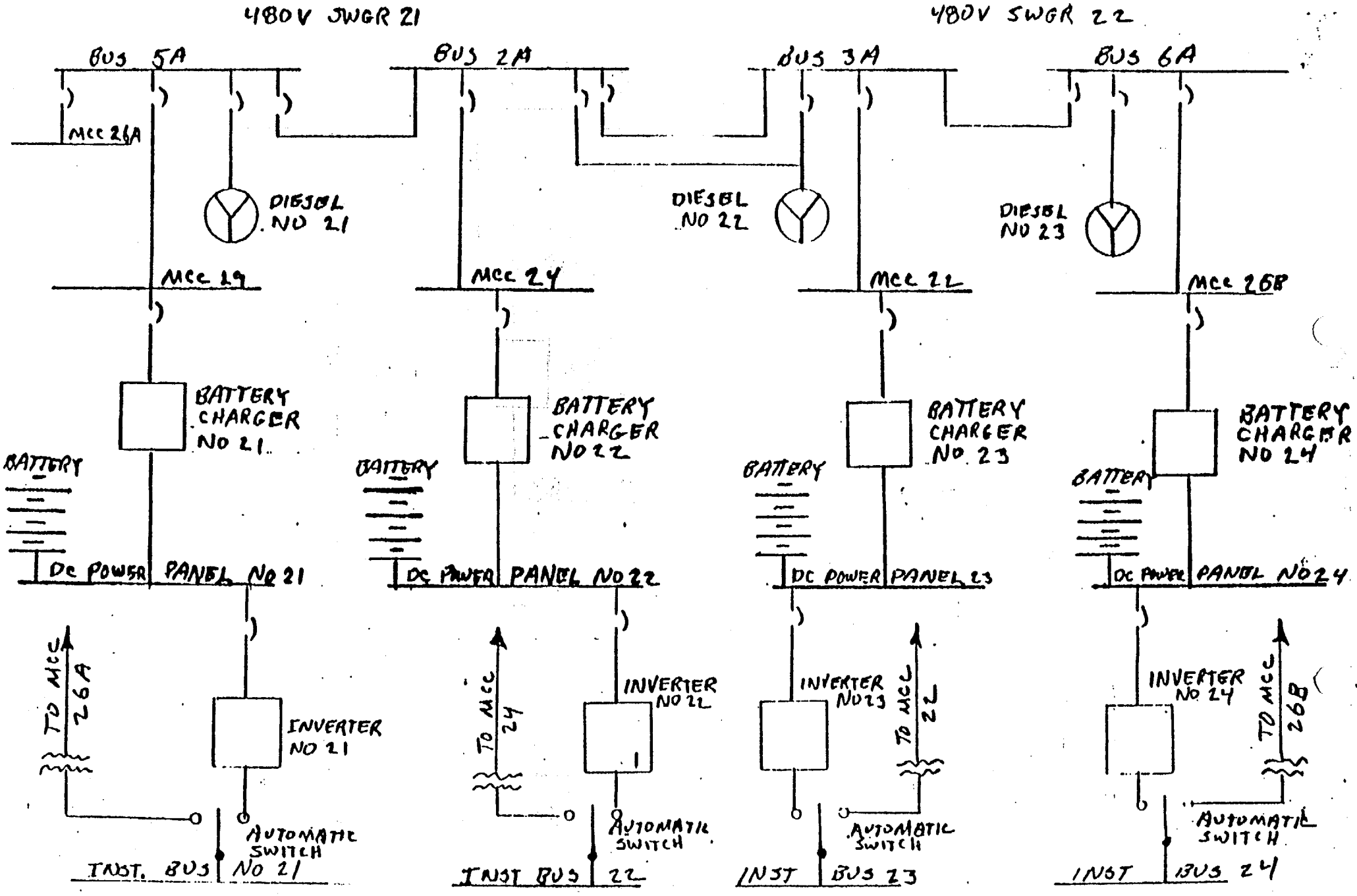
SIMPLIFIED DIAGRAM OF INDIAN POINT UNIT 2 120 VOLT AC INSTRUMENT DISTRIBUTION SYSTEM