NMC
Committed to Nuclear Excellence

Monticello Nuclear Generating Plant
2807 West County Road 75
Monticello, MN 55362-9637

Operated by Nuclear Management Company LLC

December 5, 2000

US Nuclear Regulatory Commission
Attn: Document Control Desk
Washington, DC 20555

10 CFR Part 50
Section 50.90

MONTICELLO NUCLEAR GENERATING PLANT
Docket No. 50-263 License No. DPR-22

License Amendment Request
Radiological Effluent Technical Specifications Conformance
To Standard Technical Specifications and Generic Letter 89-01

Reference 1: NUREG-1433, "Standard Technical Specifications, General Electric Plants, BWR/4," Revision 1.

Reference 2: NRC Generic Letter 89-01, "Implementation of Programmatic Controls for Radiological Effluent TS in the Administrative Controls Section of the Technical Specifications and the Relocation of Procedural Details of RETS to the Offsite Dose Calculation Manual or to the Process Control Program."

Reference 3: NRC Generic Letter 89-01, Supplement 1, "Offsite Dose Calculation Manual Guidance: Standard Radiological Effluent Controls for Boiling Water Reactors," NUREG-1302, dated April 1, 1991.

Attached is a request for change to the Technical Specifications (TS), Appendix A of the Operating Licenses, for the Monticello Nuclear Generating Plant. This request is submitted in accordance with the provisions of 10 CFR Part 50, Section 50.90. The requested amendment will revise the Monticello Radiological Effluent TS and other Sections relating to radiological controls to conform to NUREG-1433 (Reference 1) and NRC Generic Letter 89-01 (Reference 2).

Exhibit A contains a description of the proposed changes, the reasons for requesting the changes, and the supporting safety evaluation and significant hazards determination. Exhibit B contains current Monticello Technical Specification pages marked up to show the proposed changes. Exhibit C contains the revised Monticello Technical Specification pages. Exhibit D is a summary table of the proposed changes, showing the action taken for each affected specification.

Generic Letter 89-01 stipulates, "A complete and legible copy of the revised ODCM should be forwarded with the amendment request for NRC use as a reference." Information relocated from the Monticello TS to the ODCM was formatted considering

A009

the guidance of Reference 3. The Monticello ODCM is provided for information in Exhibit E, attached. The revised ODCM will become effective upon approval of the proposed license amendment.

We request an implementation period of 45 days upon issuance of this proposed amendment in order to make and implement the associated administrative changes.

In this submittal, Monticello establishes the following commitments:

> *A revision to the Monticello OQAP will be submitted to maintain procedure review and approval requirements for the radiation protection plan and implementing procedures. The change will also address review requirements for health physics procedures not reviewed by the Operations Committee.*
>
> *The Monticello Emergency Plan administrative controls will be revised to include programmatic requirements for monitoring airborne iodine in essential plant areas.*

If you have any questions related to this License Amendment Request please contact Doug Neve, Sr. Licensing Engineer, at 763-295-1353.

To the best of my knowledge, information and belief, the statements made in this document are true and correct.

by _____
Byron D. Day
Plant Manager
Monticello Nuclear Generating Plant

Signed before me on this 5th day of December, 2000 by Byron D. Day, Plant Manager, Monticello Nuclear Generating Plant, and being first duly sworn acknowledged that he is authorized to execute this document on behalf of Nuclear Management Company.

_____
Notary

Attachments:
- Exhibit A – Evaluation of Proposed Change to the Monticello Technical Specifications
- Exhibit B – Current Monticello Technical Specification Pages Marked Up With Proposed Change
- Exhibit C – Revised Monticello Technical Specification Pages
- Exhibit D – Summary Table of Technical Specification Changes
- Exhibit E – Monticello Off-Site Dose Calculation Manual

c. (next page)

c: Regional Administrator-III, NRC
NRR Project Manager, NRC
Sr. Resident Inspector, NRC
Minnesota Department of Commerce
J Silberg, Esq.

Exhibit A

License Amendment Request
Radiological Effluent Technical Specifications Conformance
To Standard Technical Specifications and Generic Letter 89-01

Evaluation of Proposed Change to the Monticello Technical Specifications

Pursuant to 10 CFR Part 50, Section 50.90, Nuclear Management Company (NMC) hereby proposes the following change to Appendix A to Facility Operating License DPR-22, "Technical Specifications" for Monticello Nuclear Generating Plant.

Background

Nuclear Regulatory Commission (NRC) Generic Letter (GL) 89-01 (Reference 1) provides guidance to implement programmatic controls for radiological effluent technical specifications (RETS) in the administrative controls section of the TS and relocate the procedural details of RETS to the offsite dose calculation manual (ODCM) or the Process Control Program (PCP). Reference 1 encouraged licensees to propose changes to their TS consistent with the guidance provided. Subsequently, NUREG-1433, "Standard Technical Specifications, General Electric Plants, BWR/4," (Reference 2) was issued. The standard technical specifications (STS) provide more recent guidance on preferred implementation of RETS. This license amendment request proposes changes consistent with the recommendations of GL 89-01 (Reference 1) and the guidance contained in the STS (Reference 2), as applicable to Monticello. Proposed changes to the STS (i.e., Travelers) initiated by the owners group Technical Specification Task Force (TSTF) and agreed to by NRC also affect the specific details of RETS. Differences between these documents with respect to the proposed amendment are addressed below.

The proposed changes add new programmatic requirements governing radioactive effluents, radiological environmental monitoring, explosive gas monitoring, radioactive storage tank limitations and solid radioactive wastes to the Administrative Controls Section of the Monticello TS. Existing specifications containing procedural details on radioactive wastes and associated reporting requirements are relocated to the ODCM or the process control program (PCP) as appropriate. Existing related programs currently included in Section 6.5 (Procedures) of the TS have been relocated to Section 6.8 (Programs).

Implementation of this license amendment will simplify the Monticello RETS, meet the regulatory requirements for radioactive effluents and radiological monitoring, and implement a line-item improvement to the Monticello TS consistent with the Reference 2 STS.

Proposed Changes and Reasons for Changes

The proposed changes to Monticello Operating License Appendix A, Technical Specifications are described below, and the specific wording changes are shown in Exhibits B and C. Additionally, Exhibit D is a summary table of the proposed changes, showing the action taken for each affected specification. The changes proposed herein reflect other changes to Monticello TS as proposed in NSP letter to NRC, dated May 4, 2000 (and NMC supplements).

The proposed changes conform with the guidance of NRC GL 89-01 (Reference 1) and the STS (Reference 2). Travelers by the TSTF have been considered to the extent that they are applicable to Monticello. In general, the outline numbering system of the proposed changes has been revised from the STS format to the custom format of the Monticello TS.

1. TABLE OF CONTENTS: Revise to reflect the deletion of Technical Specifications 3.12, 4.12, 3.16, 4.16, the bases for those specifications, and associated tables and figures. Revise the title of Specification 3.8/4.8 from "Radioactive Effluents" to "Main Condenser Offgas Activity." Revise the title of Specification 6.8 and add Specification 6.9.

Justification: The Table of Contents are revised to reflect the requested relocation of the Radiological Effluent Technical Specifications and other proposed changes.

2. Specification 1.0 "DEFINITIONS" Delete the definitions of Process Control Program, Solidification, Offsite Dose Calculation Manual, Source Check, Offgas Treatment System, Members Of The Public, Site Boundary, Unrestricted Areas and Reportable Event.

Justification: In conformance with STS, the substance of the definition of Offsite Dose Calculation Manual has been relocated to TS Section 6.8. The other definitions listed above relating to RETS have been relocated to the ODCM or PCP in accordance with NRC GL 89-01 and STS guidance. The terms "venting" and "purging" have been retained, since these terms are used elsewhere in Monticello TS. The definition of Reportable Event has been relocated to a site administrative work instruction.

3. Specification 3.8/4.8 "Radioactive Effluents" Revise title to "Main Condenser Offgas," delete all of Specification 3.8 except 3.8.B.5, 4.8.B.5 and the associated instrumentation in Tables 3.8.2 and 4.8.2; revise the Applicability and Objective to apply to main condenser offgas only. Renumber Specification 3.8 accordingly. Two typographical errors are also corrected ("stream" to "steam" and "the" to "The").

Justification: In conformance with the guidance of STS the contents of Specification 3.8/4.8 have been relocated to the ODCM or PCP as appropriate with additional programmatic controls delineated in the Administrative Controls Section of the Technical Specifications, Specifications 6.8.

Generic Letter 89-01 defined some requirements which should be retained as requirements in the existing plant Technical Specifications: (1) the figures defining the boundary for effluents; (2) existing plant Technical Specifications for explosive gas

monitoring instrumentation; and (3) limitations on the quantity of radioactivity in liquid and gaseous holdup or storage tanks.

These items have all been addressed in accordance with the more recent guidance provided by the STS. The figures defining the boundary for effluents have been relocated to the Offsite Dose Calculation Manual. Explosive gas monitoring requirements and limitations on the quantity of radioactivity in liquid and gaseous holdup or storage tanks have been relocated as programmatic controls for a new licensee controlled program, Specification 6.8.I, "Explosive Gas and Storage Tank Radioactivity Monitoring Program" (addressed below). Explosive gas monitoring instrumentation was specifically identified in NRC GL 95-10 (Reference 3) as a candidate for relocation to licensee controlled programs. The specific plant requirements have been incorporated into the ODCM.

Requirements for LCOs and surveillances for main condenser offgas activity are retained since STS include similar requirements. The offgas activity specifications and the associated instrumentation tables are appropriately renumbered to reflect relocation of the other requirements to programs and manuals. Changes have been made to reference the instrumentation requirements of Tables 3.8.1 and 3.8.2, since the previous references in Specifications 3.8.B.1 and 4.8.B.1 have been deleted. The setpoint for the condenser offgas radiation monitors will be controlled via the ODCM. No technical changes are proposed to the main condenser offgas activity requirements in this license amendment request. Two typographical errors are corrected in re-numbered specifications 3.8.A.1 and 3.8.A.3; the word "stream" is corrected to "steam" and "the" is changed to "The."

The TS Bases for Specification 3.8/4.8 have been revised, consistent with the changes described above. The bases related to RETS have been transferred to the ODCM or PCP as appropriate. The bases associated with main condenser off gas activity have been retained.

4. Specification 3.12/4.12, "Sealed Source Contamination Test": Delete Specification 3.12/4.12 in its entirety.

Justification: In conformance with the guidance of STS this request for amendment proposes to relocate the requirements of this section to a licensee controlled program. The bases for this specification have been transferred to the licensee controlled program as well. If Monticello were to convert its Technical Specifications to the STS, the conversion process would require this section to be relocated to a licensee controlled program. The same controls and benefits can be realized through this license amendment request by establishing a Monticello program and deleting this section from TS. Specification 3.12/4.12 does not meet the criteria of 10 CFR 50.36 for inclusion in technical specifications.

Radioactive material safety, including periodic leak testing of sealed sources, is described in Section 12 of the Monticello USAR (Reference 4).

5. Specification 3.16/4.16 "Radiation Environmental Monitoring Program": Delete Specification 3.16/4.16 in its entirety.

Justification: In conformance with NRC GL 89-01 and STS the contents of Specification 3.16/4.16 have been relocated to the ODCM. The TS Bases for Specification 3.16/4.16 have been transferred to the ODCM as appropriate.

The radiation environmental monitoring activities will continue under the provisions of these licensee controlled documents. Also, proposed programmatic controls delineated in the Administrative Controls Specification of the TS, Specification 6.8.A, require changes to the ODCM to be submitted to the NRC for review, thus maintaining NRC input to radiation environmental monitoring activities.

6. ADMINISTRATIVE CONTROLS, SECTION 6.5, "PLANT OPERATING PROCEDURES"

Revise Specification 6.5.A.7 and add Specification 6.5.A.8 to require procedures for all programs required by Specification 6.8 programs. Delete Specification 6.5.B.1.a; relocate Specification 6.5.B.1.b and 6.5.1.B.c to new Specification 6.9, "High Radiation Area," and revise to be consistent with STS considering TSTF-258 (Reference 5); relocate Specifications 6.5.B.2 and 6.5.B.4 to Specifications 6.8.B and 6.8.C respectively; delete Specification 6.5.B.3; delete Specification 6.5.D, "Process Control Program;" relocate Specification 6.5.E, "Offsite Dose Calculation Manual," to Specification 6.8.A and revise to be consistent with STS.

Justification:

Specifications 6.5.A.7 and 6.5.A.8

The proposed changes implement procedure requirements consistent with STS and are applicable to Monticello. Quality assurance procedures are in place for Monticello effluent and environmental monitoring programs. Addition of Specification 6.5.A.8 is necessary since the programs relocated and established in Specification 6.8 would not otherwise have specific requirements for procedures.

Specification 6.5.B.1

Specification 6.5.B.1.a currently requires establishing and maintaining a radiation protection program. This specification is proposed to be deleted. As a matter of law, a radiation protection program shall be established as required by 10 CFR 20 regardless of whether specific requirements are delineated in the TS. Furthermore, the requirements in 10 CFR 20 are sufficiently prescriptive that there is no need for further specification as part of the operating license. The procedure review and approval requirements for the radiation protection plan are more appropriate as quality assurance requirements rather than TS requirements and will be included in an upcoming change to the OQAP.

Specifications 6.5.B.1.b and 6.5.B.1.c and footnote 1 apply to control of high radiation areas in the plant. The requested changes in requirements will conform the Monticello TS to the STS by establishing Specification 6.9, "High Radiation Area." Proposed Specification 6.9 is developed from Traveler TSTF-258 (Reference 5) and allows full use of recent advances in radiation protection technology.

Specification 6.5.B.2

In conformance with STS, Specification 6.5.B.2 is relocated as program Specification 6.8.B, "Primary Coolant Sources Outside Containment." No requirements are revised as the result of relocation. Reference to the NSP letter which submitted an acceptable program is retained. Traveler TSTF-299 (Reference 6) has been incorporated as applicable to Monticello to allow a 25% surveillance interval extension to be consistent with the TS general surveillance requirements. Monticello Specification 4.0.B is referenced as applicable, since it corresponds to STS Surveillance Requirement 3.0.2. The refueling outage interval for the surveillance is retained rather than including an 18 month interval (per TSTF-299), consistent with current Monticello nomenclature.

Specification 6.5.B.3

This specification is deleted since the program for measuring airborne iodine in essential plant areas will be embodied in the Monticello Emergency Plan administrative controls. Changes to the Emergency Plan are controlled under 10 CFR 50.54(q) and 50.4; therefore, it is unnecessary to maintain this requirement as a technical specification. Additionally, deletion of this requirement is consistent with STS.

Specification 6.5.B.4

This specification is relocated to Specification 6.8.C as the "Post Accident Sampling Program," consistent with STS. No requirements are changed as the result of the relocation. Monticello notes that there is an industry initiative to eliminate this program as a TS required program. In the event that the initiative is accepted, Specification 6.8.C may be proposed to be deleted from the Monticello TS in the future.

Specification 6.5.D

In conformance with the STS, Revision 1, Specification 6.5.D has been deleted. The PCP will continue to be maintained under the existing Monticello program. This program ensures compliance with 10 CFR 20, 10 CFR 61 and 10 CFR 71 which regulate the processing and packaging of solid radioactive wastes. Since the PCP compliance is already mandated by existing regulations, it is acceptable to relocate this program to plant procedures under licensee control where it will be available onsite for inspection and audit by the NRC.

Specification 6.5.E

In conformance with NRC GL 89-01 and the STS, Specification 6.5.E has been relocated to program Specification 6.8.A, "Offsite Dose Calculation Manual." Specification 6.8.A includes the programmatic controls associated with relocation of the RETS Limiting Conditions for Operation and Surveillance Requirements from TS to the ODCM. Traveler TSTF-76 (Reference 7) has been incorporated in the proposed specification as applicable to Monticello. In Specification 6.8.A.3.b, reference is made to the generic title "plant manager."

Specification 6.5.G

The requirements for temporary changes to procedures have been revised to reflect that Specifications 6.5.B, 6.5.D, and 6.5.E have been relocated. Temporary

changes to procedures for these specifications will continue to be processed in accordance with Specification 6.5.G due to the remaining reference to Specification 6.5.A, which requires establishing the appropriate procedures for programs. The requirement for review of health physics procedures not reviewed by the Operations Committee will be included in the change to the OQAP resulting form establishment of Specification 6.9, "High Radiation Area."

7. Specification 6.6, "Operating Records"

Generic Letter 89-01 also specifies requirements for retention of records associated with changes made to the ODCM and PCP; however the more recent guidance of STS, Revision 1, does not include specifications for any record retention. Consistent with this recent guidance this proposed amendment does not include specifications for retention of Offsite dose Calculation Manual and PCP records. This is justified on the basis that NSP is committed to ANSI N45.2.9-1974, "Requirements for Collection, Storage and Maintenance of Quality Assurance Records for Nuclear Power Plants," (Reference 8) and the Monticello OQAP (Reference 9). The Monticello OQAP currently references the TS for records retention requirements, which requires records of procedure changes to be retained for five years. Reference 8 indicates that design manuals and procedures, operating procedures and changes to operating procedures are not considered life of plant records. Furthermore, if Monticello were to convert TS Chapter 6 to conform to the STS, the section on records retention would likely be removed since record retention does not meet the 10 CFR 50.36 criteria for inclusion in TS.

8. ADMINISTRATIVE CONTROLS, Specification 6.7, Reporting Requirements:

Revise the occupational exposure and radioactive effluent reporting requirements of Specifications 6.7.A.2 and 6.7.A.4 to be consistent with STS; delete the meteorological reporting requirement of Specification 6.7.A.5; revise the environmental reporting requirements of Specification 6.7.C.1 and 6.7.C.2 to be consistent with STS.

Justification:

Specification 6.7.A.2

This specification and footnote are revised to conform to the guidelines of NRC GL 89-01 and STS.

Specification 6.7.A.4

The proposed specifications for the Radioactive Effluent Release Report conform to the guidelines of NRC GL 89-01 except that the report is annual in lieu of semiannual consistent with 10 CFR 50.36a. These reporting requirements are more general than the current Monticello TS, relocate the specific report requirements to the ODCM, and cite the applicable report guidelines in 10 CFR 50.36a and 10 CFR Part 50, Appendix I.

This report specification also conforms to the guidelines of the STS, including traveler TSTF-152 (Reference 10), with the following exceptions:

> The proposed report submittal date is May 15 each year. This date is proposed to coincide with the proposed May 15 submittal date of the Annual Radiological

Environmental Monitoring Report. May 15 is only two weeks later than the current Monticello specification of May 1. Submittal dates significantly earlier in the calendar year do not allow sufficient time to analyze all of the data for the report.

Reference to the PCP has been deleted since the Monticello PCP does not contain any guidance applicable to the Radioactive Effluent Report.

Specification 6.7.A.5

This specification is deleted, consistent with STS. The meteorological data discussed in this specification is only required to be submitted at the request of the NRC. Such a request may be made regardless of whether there is a specification.

Specification 6.7.C.1

The proposed specifications for the Annual Radiological Environmental Operating Report conform to the guidelines of STS for the Annual Radiological Environmental Operating Report. These reporting requirements are more general than the current Monticello TS and cite the applicable report guidelines in 10 CFR Part 50, Appendix I. The specific report requirements are relocated to the ODCM. This proposed report specification conforms to the guidelines of the STS, considering traveler TSTF-348 (Reference 11). The word "unit" has been replaced with the more general term "site."

Specification 6.7.C.2

The environmental special report requirement has been relocated to the ODCM and can be deleted from the Monticello TS, consistent with STS.

9. Specification 6.8, "Programs"

Section 6.8 was proposed to be added in NSP letter to NRC dated May 4, 2000 (and NMC supplements). The changes proposed herein reflect the changes proposed previously. In addition to the programs relocated as discussed above, revise the title of Specification 6.8 to "Programs and Manuals;" add introductory sentence; add Specification 6.8.D, "Radioactive Effluent Controls Program;" add Specification 6.8.I, "Explosive Gas and Storage Tank Radioactivity Monitoring Program;" Add Specifications 6.8.E, 6.8.F, 6.8.G, 6.8.H, and 6.8.J as "reserved." Include the Technical Specification Bases Control Program as Specification 6.8.K

Justification

The change in title and descriptive matter added conform with the STS.

Specification 6.8.D

Specification 6.8.D, "Radiological Effluent Controls Program," is a new Specification which conforms with the guidance provided by NRC GL 89-01 and STS. Traveler TSTF-258 (Reference 5) is incorporated as applicable to Monticello.

Substantive departures from STS for this section are as follows:

6.8.D.5 Replace "31 days" with "monthly" to be consistent with existing Monticello Technical Specification requirements.

Specification 6.8.I

Specification 6.8.I, "Explosive Gas and Storage Tank Radioactivity Monitoring Program," is a new Specification established in conformance with the guidance provided by STS. Generic Letter 89-01 defined some specifications for which the existing specification requirements should be retained, including requirements for explosive gas mixtures, liquid holdup tank contents and gaseous holdup tank contents. However, more recent Nuclear Regulatory Commission and industry guidance provided by the STS indicates that establishment of an administrative controls program is a more appropriate format for these requirements.

Substantive departures from STS for this section are as follows:

> 6.8.I, Introductory Paragraph Reference to methodologies for determining gaseous and liquid storage limits have been Replaced with specific limits taken from the current Monticello TS which have been previously approved by the NRC.
>
> 6.8.I, last paragraph, Monticello Specifications 4.0.B, 4.0.D, and 4.0.E contain requirements comparable to STS SR 3.0.2 and SR 3.0.3.

Reserved Program Specifications

Specifications 6.8.E, 6.8.F, 6.8.G, 6.8.H, and 6.8.J are included as "Reserved" to preserve the order of STS.

Specification 6.8.K

The Technical Specification Bases Control Program was proposed to be added in NSP letters to NRC dated May 4, 2000 (and supplements) as Program Specification 6.8.A. This amendment request administratively re-indexes the program to Specification 6.8.K to preserve the order of STS.

10. Added and Deleted Pages

The changes discussed in items 1 through 9 above result in the addition of new pages 251 through 261 and the deletion of pages 5b, 197 through 198z, 219 through 222, 229h through 244a, 246a through 246c, 247a, and 249a through 249b. As a result, pages 196, 218 and 229g, have been revised to include reference to the next page after the deleted pages.

Following NRC approval, the Monticello Updated Safety Analysis report will be appropriately revised to reflect the changes proposed above.

Safety Evaluation

The proposed changes to the Monticello TS will implement the recommendations contained in NRC GL 89-01 and the guidance provided by the STS as modified by TSTF travelers. The proposed changes add new programmatic requirements governing radioactive effluents, radiological environmental monitoring, solid radioactive wastes, explosive gas monitoring and storage tank radioactivity limitations. Existing TS containing procedural details on radioactive effluents, radiological environmental monitoring, radioactive source leakage testing, explosive gas monitoring, storage tank radioactive content limits, solid radioactive wastes and associated reporting requirements are being relocated to the ODCM, PCP or other licensee controlled programs as appropriate. In addition, changes are proposed to other portions of the TS

to accommodate the incorporation of NRC GL 89-01 and the subject relevant portions of the STS.

The level of radiological control will not be reduced by the proposed changes to the TS since compliance with applicable regulatory requirements governing the radiation protection plan, radioactive effluents, radioactive sources and radiological environmental monitoring, including 10 CFR 20, 40 CFR 190, 10 CFR 30, 10 CFR 50.36a, and 10 CFR Part 50, Appendix A will continue to be maintained. The proposed changes will allow for the relocation of procedural details from the TS to the ODCM, PCP or other new licensee controlled programs as appropriate. Accordingly, future changes to these procedural details will be controlled by the controls for changes to the programs included in the proposed changes to the Administrative Controls Sections of the TS. These procedural details have been included in conformance with the recommendations of NRC GL 89-01 and the guidance of the STS.

Determination of Significant Hazards Considerations

Nuclear Management Company (NMC) proposes to revise the Monticello Nuclear Plant Technical Specifications (TS), Appendix A to the Operating License, to administratively relocate requirements for radiological and environmental controls to TS programs. The detailed requirements are proposed to be relocated to station procedures. The proposed changes include requirements to evaluate future changes to determine whether NRC approval is required. The proposed changes to the Operating License have been evaluated to determine whether they constitute a significant hazards consideration as required by 10 CFR Part 50, Section 50.91 using the standards provided in Section 50.92. This analysis is provided below:

1. The proposed amendment will not involve a significant increase in the probability or consequences of an accident previously evaluated.

The proposed changes do not involve a significant increase in the probability or consequences of an accident previously evaluated. The proposed changes are administrative in nature and alter only the format and location of programmatic controls and procedural details relative to radioactive effluents, radiological environmental monitoring, radioactive source leakage testing, solid radioactive wastes, and associated reporting requirements. Existing TS containing procedural details on radioactive effluents, radiological environmental monitoring, radioactive source leakage testing, explosive gas monitoring, storage tank radioactive content limits, solid radioactive wastes and associated reporting requirements are being relocated to the ODCM, PCP or other new programs as appropriate. Compliance with applicable regulatory requirements will continue to be maintained. In addition, the proposed changes do not alter the conditions or assumptions in any of the previous accident analyses. Since the previous accident analyses remain bounding, the radiological consequences previously evaluated are not adversely affected by the proposed changes.

Therefore, the probability or consequences of an accident previously evaluated are not affected by any of the proposed amendments.

2. The proposed amendment will not create the possibility of a new or different kind of accident from any accident previously analyzed.

The proposed changes do not create the possibility of a new or different kind of accident from any accident previously evaluated. The proposed changes do not involve any change to the configuration or method of operation of any plant equipment. Accordingly, no new failure modes have been defined for any plant system or component important to safety nor has any new limiting single failure been identified as a result of the proposed changes. Also, there will be no change in types or increase in the amounts of any effluents released offsite.

Therefore, the possibility of a new or different kind of accident from any accident previously evaluated would not be created.

3. The proposed amendment will not involve a significant reduction in the margin of safety.

The proposed changes do not involve a significant reduction in a margin of safety. The proposed changes do not involve any actual change in the methodology used in the control of radioactive effluents, radioactive sources, solid radioactive wastes, or radiological environmental monitoring. These changes are considered administrative in nature and provide for the relocation of procedural details outside of the technical specifications but add appropriate administrative controls to provide continued assurance of compliance to applicable regulatory requirements. These proposed changes also comply with the guidance contained in Generic Letter 89-01 and the STS.

Therefore, it can be concluded a significant reduction in the margin of safety would not be involved.

Based on the evaluation described above, and pursuant to 10 CFR Part 50, Section 50.91, Nuclear Management Company has determined that operation of the Monticello Nuclear Generating Plant in accordance with the proposed license amendment request does not involve any significant hazards considerations as defined by Nuclear Regulatory Commission regulations in 10 CFR Part 50, Section 50.92.

Environmental Assessment

Nuclear Management Company has evaluated the proposed changes and determined that:

1. The changes do not involve a significant hazards consideration, or

2. The changes do not involve a significant change in the types or significant increase in the amounts of any effluents that may be released offsite, or

3. The changes do not involve a significant increase in individual or cumulative occupational radiation exposure.

Accordingly, the proposed changes meet the eligibility criterion for categorical exclusion set forth in 10 CFR Part 51 Section 51.22(c)(9). Therefore, pursuant to 10 CFR Part 51 Section 51.22(b), an environmental assessment of the proposed changes is not required.

REFERENCES

1. NRC Generic Letter 89-01, "Implementation of Programmatic Controls for Radiological Effluent TS in the Administrative Controls Section of the Technical Specifications and the Relocation of Procedural Details of RETS to the Offsite Dose Calculation Manual or to the Process Control Program," dated January 31, 1989.
2. NUREG-1433, "Standard Technical Specifications, General Electric Plants, BWR/4," Revision 1.
3. NRC Generic Letter 95-10, "Relocation of Selected Technical Specifications Requirements Related to Instrumentation," dated December 12, 1995.
4. Monticello USAR, Section 12, "Plant Structures and Shielding," Revision 18.
5. Traveler TSTF-258, "Changes to Section 5.0, Administrative Controls," Revision 4.
6. Traveler TSTF-299, "Administrative Controls Program 5.5.2.b Test Interval and Exception," Revision 0.
7. Traveler TSTF-76, "Remove References to Onsite Review Function," Revision 1.
8. ANSI N45.2.9-1974, "Requirements for Collection, Storage and Maintenance of Quality Assurance Records for Nuclear Power Plants."
9. Monticello Operational Quality Assurance Program, Revision 23.
10. Traveler TSTF-152, "Revise Reporting Requirement to be Consistent with 10 CFR 20," Revision 0.
11. Traveler TSTF-348, "Cancellation of NRC Environmental Monitoring Program," Revision 0.

License Amendment Request
Radiological Effluent Technical Specifications Conformance
To Standard Technical Specifications and Generic Letter 89-01

Current Monticello Technical Specification Pages Marked Up With Proposed Change

This exhibit consists of current Technical Specification pages marked up with the proposed change. The pages included in this exhibit are as listed below:

Pages
iii – vii
5
5a
192 – 198z
218 – 222
229g – 229t
244 – 246b
249
Insert for Specification 6.7.A.2
Insert for Specification 6.7.A.4
249a
251
Insert for Specification 6.7.C.1 (2 pages)
252
Markup of STS pages 5.0-7, -8, -9
Insert for Specification 6.8.D
Markup of STS pages 5-10, -13, -14
Insert for Specification 6.8.I
253
Markup of TSTF-258 for Specification 6.9 (5 pages)

TABLE OF CONTENTS (Cont'd)

	Page
3.8 and 4.8 ~~Radioactive Effluents~~ Main Condenser Offgas	192
A. Liquid Effluents	192
B. Gaseous Effluents	197
C. Solid Radioactive Waste	198e
D. Dose from ~~All Uranium~~ Fuel Cycle Sources	198f
3.8 and 4.8 Bases	~~198u~~ 196
A. Main Condenser Offgas Activity	192
3.9 and 4.9 Auxiliary Electrical Systems	199
A. Operational Requirements for Startup	199
B. Operational Requirements for Continued Operation	200
1. Transmission Lines	200
2. Reserve Transformers	201
3. Standby Diesel Generators	201
4. Station Battery System	203
5. 24V Battery Systems	203
3.9 Bases	204
4.9 Bases	205
3.10 and 4.10 Refueling	206
A. Refueling Interlocks	206
B. Core Monitoring	207
C. Fuel Storage Pool Water Level	207
D. Movement of Fuel	207
E. Extended Core and Control Rod Drive Maintenance	208
3.10 and 4.10 Bases	209
3.11 and 4.11 Reactor Fuel Assemblies	211
A. Average Planar Linear Heat Generation Rate	211
B. Linear Heat Generation Rate	212
C. Minimum Critical Power Ratio	213
3.11 Bases	216
4.11 Bases	218
3.12 and 4.12 ~~Sealed Source Contamination~~ Deleted	219
A. Contamination	219
B. Records	221
3.12 and 4.12 ~~Bases~~	222

TABLE OF CONTENTS (Cont'd)

		Page
3.13 and 4.13	Fire Detection Protection Systems	223
	A. Fire Detection Instrumentation	223
	B. Fire Suppression Water System	224
	C. Hose Stations	226
	D. Yard Hydrant Hose Houses	227
	E. Sprinkler Systems	227a
	F. Halon Systems	227b
	G. Penetration Fire Barriers	227b
	H. Alternate Shutdown System	227c
	3.13 Bases	228
	4.13 Bases	228b
3.14 and 4.14	Accident Monitoring Instrumentation	229a
	3.14 and 4.14 Bases	229e
3.15 and 4.15	Inservice Inspection and Testing	229f
	3.15 and 4.15 Bases	229g
3.16 and 4.16	~~Radiation Environmental Monitoring Program~~	~~229h~~
	~~A. Sample Collection & Analysis~~	~~229h~~
	~~B. Land Use Census~~	~~229j~~
	~~C. Interlaboratory Comparison Program~~	~~229k~~
	~~3.16 and 4.16 Bases~~	~~229t~~
3.17 and 4.17	Control Room Habitability	229u
	A. Control Room Ventilation System	229u
	B. Control Room Emergency Filtration System	229v
	3.17 Bases	229y
	4.17 Bases	229z
3.18 and 4.18	Emergency Service Water System	229za
	A. Emergency Filtration Train ESW (EFT-ESW)	229za
	3.18 Bases	229zc
	4.18 Bases	229zf
5.0 DESIGN FEATURES		230
	5.1 Site	230
	5.2 Reactor	230
	5.3 Reactor Vessel	230
	5.4 Containment	230
	5.5 Fuel Storage	231
	5.6 Seismic Designs	231
6.0 ADMINISTRATIVE CONTROLS		232
	6.1 Organization	232
	6.2 (Deleted)	
	6.3 (Deleted)	
	6.4 Action to be taken if a Safety Limit is Exceeded	243
	6.5 Plant Operating Procedures	244
	6.6 Plant Operating Records	246
	6.7 Reporting Requirements	248
	6.8 Programs and Manuals	253
	6.9 High Radiation Area	259

Deleted

LIST OF FIGURES

Figure No.		Page
3.4.1	Sodium Pentaborate Solution Volume-Concentration Requirements	97
3.4.2	Sodium Pentaborate Solution Temperature Requirements	98
3.6.1	Core Beltline Operating Limits Curve Adjustment vs. Fluence	133
3.6.2	Minimum Temperature vs. Pressure for Pressure Tests	134
3.6.3	Minimum Temperature vs. Pressure for Mechanical Heatup or Cooldown Without the Core Critical	135
3.6.4	Minimum Temperature vs. Pressure for Critical Core Operation	136
4.6.2	Chloride Stress Corrosion Test Results @ 500°F	137
3.7.1	Differential Pressure Decay Between the Drywell and Wetwell	191
~~3.8.1~~	~~Monticello Nuclear Generating Plant Site Boundary for Liquid Effluents~~	~~198g~~
~~3.8.2~~	~~Monticello Nuclear Generating Plant Site Boundary for Gaseous Effluents~~	~~198h~~

LIST OF TABLES

Table No.		Page
3.1.1	Reactor Protection System (Scram) Instrument Requirements	28
4.1.1	Scram Instrument Functional Tests - Minimum Functional Test Frequencies for Safety Instrumentation and Control Circuits	32
4.1.2	Scram Instrument Calibration - Minimum Calibration Frequencies for Reactor Protection Instrument Channels	34
3.2.1	Instrumentation that Initiates Primary Containment Isolation Functions	49
3.2.2	Instrumentation that Initiates Emergency Core Cooling Systems	52
3.2.3	Instrumentation that Initiates Rod Block	56
3.2.4	Instrumentation that Initiates Reactor Building Ventilation Isolation and Standby Gas Treatment System Initiation	59
3.2.5	Instrumentation That Initiates a Recirculation Pump Trip and Alternate Rod Injection	60
3.2.6	Instrumentation for Safeguards Bus Degraded Voltage and Loss of Voltage Protection	60a
3.2.7	Instrumentation for Safety/Relief Valve Low-Low Set Logic	60b
3.2.8	Other Instrumentation	60d
3.2.9	Instrumentation for Control Room Habitability Protection	60e
4.2.1	Minimum Test and Calibration Frequency for Core Cooling, Rod Block and Isolation Instrumentation	61
4.6.1	Snubber Visual Inspection Interval	132a
3.8.1	~~Radioactive Liquid Effluent Monitoring~~ Main Condenser Offgas Instrumentation	~~198i~~ 194
~~3.8.2~~	~~Radioactive Gaseous Effluent Monitoring Instrumentation~~	~~198k~~
4.8.1	~~Radioactive Liquid Effluent Monitoring~~ Main Condenser Offgas Instrumentation Surveillance Requirements	~~198m~~ 195
4.8.2	Radioactive Gaseous Effluent Monitoring Instrumentation Surveillance Requirements	198n
4.8.3	Radioactive Liquid Waste Sampling and Analysis Program	198p
4.8.4	Radioactive Gaseous Waste Sampling and Analysis Program	198s

LIST OF TABLES (Cont'd)

Table No.		Page
3.13.1	Safety Related Fire Detection Instruments	227d
3.14.1	Instrumentation for Accident Monitoring	229b
4.14.1	Minimum Test and Calibration Frequency for Accident Monitoring Instrumentation	229d
~~4.16.1~~	~~Radiation Environmental Monitoring Program (REMP) - Sample Collection and Analysis~~	~~229l~~
~~4.16.2~~	~~REMP - Maximum Values for the Lower Limits of Detection (LLD)~~	~~229q~~
~~4.16.3~~	~~REMP - Reporting Levels for Radioactivity Concentrations in Environmental Samples~~	~~229s~~
6.1.1	Minimum Shift Crew Composition	236

Y. Shutdown - The reactor is in a shutdown condition when the reactor mode switch is in the shutdown mode position and no core alterations are being performed. In this condition, a reactor scram is initiated and a rod block is inserted directly from the mode switch. The scram can be reset after a short time delay.

1. Hot Shutdown means conditions as above with reactor coolant temperature greater than 212°F.
2. Cold Shutdown means conditions as above with reactor coolant temperature equal to or less than 212°F.

Z. Simulated Automatic Actuation - Simulated automatic actuation means applying a simulated signal to the sensor to actuate the circuit in question.

AA. Transition Boiling - Transition boiling means the boiling regime between nucleate and film boiling, also referred to as partial nucleate boiling. Transition boiling is the regime in which both nucleate and film boiling occur intermittently with neither type being completely stable.

AB. Pressure Boundary Leakage - Pressure boundary leakage shall be leakage through a non-isolable fault in the reactor coolant system pressure boundary.

AC. Identified Leakage - Identified leakage shall be:

1) Reactor coolant leakage into drywell collection systems, such as pump seal or valve packing leaks, that is captured and conducted to a sump or collecting tank, or
2) Reactor coolant leakage into the drywell atmosphere from sources which are specifically located and known not to be Pressure Boundary Leakage or which do not significantly impair the methods used to detect reactor coolant leakage.

AD. Unidentified Leakage - Unidentified leakage shall be all reactor coolant leakage which is not Identified Leakage.

AE. Process Control Program (PCP) - The PCP is the manual containing the current formula, sampling, analysis, test and determinations to be made to ensure that the processing and packaging of solid radioactive wastes based on demonstrated processing of actual or simulated wet solid wastes will be accomplished in such a way as to assure compliance with 10 CFR 20, 10 CFR 71, and Federal and State regulations and other requirements governing the disposal of radioactive wastes.

AF. Solidification - Solidification is the conversion of wet radioactive wastes into a form that meets shipping and burial ground requirements.

AG. Offsite Dose Calculation Manual (ODCM) - The ODCM is the manual containing the methodology and parameters to be used in the calculation of offsite doses due to radioactive liquid and gaseous effluents, in the calculation of liquid and gaseous effluent monitoring instrumentation alarm and/or trip setpoints, and in the conduct of environmental radiological environmental monitoring.

AE through AH Deleted

AH. Source Check - ~~A Source Check is the qualitative assessment of channel response when the channel sensor is exposed to a radioactive source.~~

AI. Purging - Purging is the controlled process of discharging air or gas from a confinement to maintain temperature pressure, humidity, concentration, or other operating condition, in such a manner that replacement air or gas is required to purify the confinement.

AJ. Venting - Venting is the controlled process of discharging air or gas from a confinement to maintain temperature, pressure, humidity, concentration, or other operating condition, in such a manner that replacement air or gas is not provided or required.

AK. Dose Equivalent I-131 - Dose Equivalent I-131 is the concentration of I-131 (microcuries/gram) which alone would produce the same thyroid dose as the quantity and isotopic mixture of I-131, I-132, I-133, I-134 and I-135 actually present. The thyroid dose conversion factors used for this calculation shall be those listed in Table III of TID-14844, "Calculation of Distance Factors for Power and Test Reactor Sites" or in NRC Regulatory Guide 1.109, Rev 1, October, 1977.

AL. Offgas Treatment System - The Offgas Treatment System is the system designed and installed to reduce radioactive gaseous effluents by collecting primary coolant system offgases from the primary system and providing for delay or holdup for the purpose of reducing the total radioactivity prior to release to the environment.

AM. Members of the Public - Means all persons who are not occupationally associated with the plant. This category does not include employees of the utility, its contractors, or its vendors. Also excluded from this category are persons who enter the site to service equipment or to make deliveries. This category does include persons who use portions of the site for recreational, occupational, or other purposes not associated with the plant.

AN. Site Boundary - Means a line within which the land is owned, leased, or otherwise controlled by the licensee. The site boundary for liquid releases of radioactive material is defined in Figure 3.8.1. The site boundary for gaseous releases of radioactive material is defined in Figure 3.8.2.

AO. Unrestricted Areas - Means any area at or beyond the site boundary to which access is not controlled by the licensee for purposes of protection of individuals from exposure to radiation and radioactive materials or any area within the site boundary used for residential quarters or industrial, commercial, institutional and/or recreational purposes.

AP. Reportable Event - A Reportable Event shall be any plant occurrence or event which must be reported, per 10 CFR 50.73, requiring written reports to the Commission.

AL through AP Deleted

3.0 LIMITING CONDITIONS FOR OPERATION

3.8 ~~RADIOACTIVE EFFLUENTS~~ Main Condenser Offgas

A. Main Condenser Offgas Activity

Applicability:

Applies ~~at all times~~ to the ~~liquid and gaseous~~ radioactive ~~effluents from the plant and the solidification and packaging for shipment of solid radioactive waste~~. release rate from the ~~manner~~ steam jet air ejectors

Objective:

~~To implement the requirements of 10 CFR 20, 10 CFR 71, 10 CFR 50 Section 50.36a, Appendix A and Appendix I to 10 CFR 50, 40 CFR 141, and 40 CFR 190 pertaining to radioactive effluents.~~ To limit the doses received at the site boundary from the main condenser offgas in the event that effluent is discharged with less than full treatment

Specification:

~~A. Liquid Effluents~~

~~1. Concentration~~

~~a. The concentration of liquid radioactive material released from the site (Figure 3.8.1) shall be limited to the concentrations specified in 10 CFR Part 20, Appendix B, Table II, Column 2, for radionuclides other than dissolved or entrained noble gases. For dissolved or entrained noble gases, the concentration shall be limited to 2 x10^{-4} uci/ml total activity.~~

~~b. When the concentration of radioactive material in liquid released from the site exceeds the limits in (a) above, immediately restore concentration within acceptable limits.~~

4.0 SURVEILLANCE REQUIREMENTS

4.8 ~~RADIOACTIVE EFFLUENTS~~ Main Condenser Offgas

A. Main Condenser Offgas Activity

Applicability:

Applies to the sampling, monitoring, ~~and recording of liquid and gaseous~~ radioactive effluents, ~~verification of solidification~~, and verification of equipment operability.

and of

discharged from steam jet air ejectors

Objective:

~~To implement the requirments of 10 CFR 20, 10 CFR 71, 10 CFR 50 Section 50.36a, Appendix A and Appendix I to 10 CFR 50, 40 CFR 141, and 40 CFR 190 pertaining to radioactive effluents.~~

Specification:

A. Liquid Effluents

1. Concentration

a. Surveillance of liquid effluent monitoring instrumentation shall be performed as required by Table 4.8.1.

3.0 LIMITING CONDITIONS FOR OPERATION	4.0 SURVEILLANCE REQUIREMENTS
c. Radioactive material in liquid effluent released from the site shall be continuously monitored in accordance with Table 3.8.1. d. The liquid effluent monitors having provisions for automatic alarming, as listed in Table 3.8.1, shall be used to limit the concentration of radioactive material released at any time from the site to the values given in 3.8.A.1.a. Setpoints shall be determined in accordance with the methods in the Offsite Dose Calculation Manual (ODCM).	b. Radioactive liquid wastes shall be sampled and analyzed according to the sampling and analysis program of Table 4.8.3. c. The results of radioactive analysis shall be used in accordance with the methods of the ODCM to assure that the concentrations at the point of release are maintained within the limits of Specification 3.8.A.1.a.

3.0 LIMITING CONDITIONS FOR OPERATION

2. Dose

a. The dose or dose commitment to an individual from radioactive materials in liquid effluents released from the site (Figure 3.8/1) shall be limited:

1. During any calendar quarter to ≤1.5 mrem to the total body and to ≤5 mrem to any organ, and

2. During any calendar year to ≤3 mrem to the total body and to ≤10 mrem to any organ.

b. With the calculated dose from the release of radioactive materials in liquid effluents exceeding any of the above limits, within 30 days submit to the Commission a special report which identifies the cause(s) for exceeding the limit(s) and defines the corrective actions taken to reduce the releases and the proposed corrective action to be taken to assure the subsequent releases will be within the above limits. This special report shall also include (1) the results of radiological analyses of the drinking water source, and (2) the radiological impact on finished drinking water supplies with regard to the requirements of 40 CFR 141, Safe Drinking Water Act.

4.0 SURVEILLANCE REQUIREMENTS

2. Dose

a. Cumulative dose contributions for the current calendar quarter and year from liquid effluents shall be determined in accordance with the ODCM monthly.

3.0 LIMITING CONDITIONS FOR OPERATION	4.0 SURVEILLANCE REQUIREMENTS
3. Liquid Radwaste System a. The liquid radwaste treatment system shall be used to reduce the radioactive materials in liquid wastes prior to their discharge when the projected doses due to the liquid effluent from the site (Figure 3.8.1) when averaged over one month would exceed 0.06 mrem to the total body or 0.2 mrem to any organ. b. With radioactive liquid waste being discharge without treatment in excess of the limit in (a) above, within 30 days submit to the Commission a special report which includes the following information: 1. Identification of the inoperable equipment or subsystems and the reason for inoperability, 2. Action(s) to be taken to restore equipment to operable status, and 3. Summary description of action(s) taken to prevent a recurrence.	3. Liquid Radwaste System a. Doses due to liquid releases shall be projected at least once each month in accordance with the ODCM.

3.0 LIMITING CONDITIONS FOR OPERATION	4.0 SURVEILLANCE REQUIREMENTS
4. Liquid Holdup Tanks a. The quantity of radioactive material contained in each outside temporary tank shall be limited to ≤10 curies, excluding tritium and dissolved or entrained noble gases. b. With the quantity of radioactive material in any outside temporary tank exceeding the limit in (a) above, immediately suspend all additions of radioactive material to the tank and within 48 hours reduce the tank contents to within the limit.	4. Liquid Holdup Tanks a. The quantity of radioactive material contained in each outside temporary tank shall be determined to be within the limit in 3.8.A.4.a by analyzing a representative sample of the contents of the tank at least weekly when radioactive materials are being added to the tank.

3.0 LIMITING CONDITIONS FOR OPERATION

B. Gaseous Effluents

1. Dose Rate

a. The dose rate at any time due to radioactive materials released in gaseous effluents from the site (Figure 3.8.2) shall be limited to the following:

1. For noble gases to ≤500 mrem/year to the total body and ≤3000 mrem/year to the skin, and

2. For I-131, tritium, and radioactive particulates, with half-lives greater than eight days to ≤1500 mrem/year to any organ.

b. With the dose rate(s) exceeding the limits in (a) above, immediately decrease the release rate within acceptable limits.

c. Radioactive material in gaseous effluents released from the site shall be continuously monitored in accordance with Table 3.8.2.

d. The noble gas effluent monitors having provisions for the automatic termination of gaseous releases, as listed in Table 3.8.2 shall be used to limit offsite dose rates to the values established in Specification 3.8.B.1.a.1. Setpoints shall be determined in accordance with the ODCM.

4.0 SURVEILLANCE REQUIREMENTS

B. Gaseous Effluents

1. Dose Rate

a. Surveillance of gaseous effluent monitoring instruments shall be performed as required by Table 4.8.2.

b. The release rate of I-131, tritium and radioactive particulates with half-lives greater than eight days shall be determined by obtaining representative samples and performing analyses in accordance with the sampling and analysis program specified in Table 4.8.4. Following each analysis the dose rate due to I-131, tritium, and radioactive particulates with half-lives greater than eight days shall be determined to be less than the limit in Specification 3.8.B.1.a.2 in accordance with the ODCM.

3.0 LIMITING CONDITIONS FOR OPERATION

2. Dose from Noble Gases

   a. The air dose due to noble gases released in gaseous effluents from the site (Figure 3.8.2) shall be limited to the following values:

      1. During any calendar quarter, to ≤5 mrad for gamma radiation and ≤10 mrad for beta radiation, and

      2. During any calendar year, to ≤10 mrad for gamma radiation and ≤20 mrad for beta radiation.

   b. With the calculated air dose from radio-active noble gases in gaseous effluent exceeding any of the above limits, within 30 days submit to the Commission a special report which identifies the cause(s) for exceeding the limits(s) and defines the corrective actions taken to reduce the releases and the proposed corrective actions to be taken to assure the subsequent releases will be within the above limits.

4.0 SURVEILLANCE REQUIREMENTS

2. Dose from Noble Gases

   a. Cumulative dose contributions for the current calendar quarter and year from noble gases in gaseous effluents shall be determined in accordance with the ODCM monthly.

3.0 LIMITING CONDITIONS FOR OPERATION

3. Dose from I-131, tritium, and radioactive particulates with half-lives greater than eight days.

   a. The dose to any organ of an individual due to I-131, tritium, and radioactive particulates with half-lives greater than eight days released from the site (Figure 3.8.2) in gaseous effluent shall be limited to the following:

      1. During any calendar quarter to ≤7.5 mrem, and

      2. During any calendar year to ≤15 mrem.

   b. With the calculated dose from the release of I-131, tritium, and radioactive particulates with half-lives greater than eight days exceeding any of the above limits, within 30 days submit to the Commission a special report which identifies the cause(s) for exceeding the limit(s) and defines the corrective actions taken to reduce the releases and the proposed corrective actions to be taken to assure the subsequent releases will be within the above limits.

4.0 SURVEILLANCE REQUIREMENTS

3. Dose from I-131, tritium, and radioactive particulates with half-lives greater than eight days.

   a. Cumulative dose contributions for the current calendar quarter and year from I-131, tritium, and radioactive particulates with half-lives greater than eight days in gaseous effluents shall be determined in accordance with the ODCM monthly.

3.0 LIMITING CONDITIONS FOR OPERATION	4.0 SURVEILLANCE REQUIREMENTS
4. Offgas Treatment System a. The offgas treatment system shall be in operation whenever the main condenser air ejector system is in operation. Components of the system shall be operated to provide the maximum holdup time obtainable except during periods of equipment maintenance. b. With gaseous waste being discharged for more than 7 days with a holdup time of less than 50 hours, within 30 days submit to the Commission a special report which includes the following information: 1. Identification of equipment or sub-systems not functional and the reason. 2. Action(s) taken to restore equipment to functional status. 3. Summary description of action(s) taken to prevent a recurrence.	4. Offgas Treatment System a. Following each isotopic analysis of a sample of gases from the steam jet air ejector required by 4.8.B.5, verify that the maximum storage tank activity limit specified in 3.8.B.4.e cannot be exceeded using the method in the ODCM.

3.0 LIMITING CONDITIONS FOR OPERATION	4.0 SURVEILLANCE REQUIREMENTS
c. The concentration of hydrogen in the compressed storage subsystem shall be limited to ≤2% by volume. With the concentration of hydrogen >2% by volume, but ≤4% by volume, restore the concentration of hydrogen to <2% by volume within 48 hours or suspend operation of the compressed storage subsystem. d. The hydrogen monitors shall be operable as specified in Table 3.8.2 and set to automatically trip the off gas compressors at ≤4% hydrogen by volume. e. The quantity of radioactivity after 12 hours holdup contained in each gas storage tank shall be limited to ≤22,000 curies of noble gases (considered as dose equivalent Xe-133).	

3.0 LIMITING CONDITIONS FOR OPERATION

A ~~5.~~ Main Condenser Offgas Activity

1 ~~a.~~ The gross gamma radioactivity release rate measured at the ~~stream~~ steam jet air ejector shall be limited to $\leq 2.6 \times 10^5$ uci/sec following a 30-minute decay.

2 ~~b.~~ When the limit in ~~(a)~~ 1 above is exceeded, restore the gross gamma radioactivity release rate to within the limit within 72 hours or be in at least hot shutdown within the next 12 hours.

3 ~~c.~~ The activity of radioactive material in gaseous form removed from the main condenser shall be continuously monitored by the steam jet air ejector monitors in accordance with Table 3.8.~~2.~~ 1

4 ~~d.~~ The steam jet air ejector monitors shall be set to automatically terminate offgas flow within 30 minutes at the limit established in Specification ~~3.8.B.5.a.~~ 3.8.A.1.

6. Containment Venting and Purging

a. Except for inerting operations following startup and deinerting prior to shutdown, containment venting and purging above cold shutdown shall be via the 2-inch bypass flow path using the Standby Gas Treatment System.

b. Containment inerting following startup and deinerting prior to shutdown shall be via the Reactor Building plenum and vent.

4.0 SURVEILLANCE REQUIREMENTS

A ~~5.~~ Main Condenser Offgas Activity

1. The gross gamma radioactivity of noble gases from the main condenser air ejector shall be determined to be within the limit specified in ~~3.8.B.5.a~~ 3.8.A.1 at the following times by performing an isotopic analysis of a representative sample of gases:

a. ~~1.~~ Once every month.

b. ~~2.~~ Within 24 hours following an increase in the continuous monitor reading of 50% after factoring out increases due to power level.

6. Containment Venting and Purging

a. Except for inerting operations following startup and deinerting prior to shutdown, the containment shall be determined to be aligned for venting or purging through the Standby Gas Treatment System within 4 hours prior to start of and at least once per 12 hours during venting or purging of the containment above cold shutdown.

b. Prior to containment purging, the sampling and analysis requirements of Table 4.8.4 shall be met.

2. Surveillance of Main condenser Offgas instrumentation shall be performed as required by Table 4.8.1

3.0 LIMITING CONDITIONS FOR OPERATION

C. Solid Radioactive Waste

1. Solid Radwaste System

a. A solid radwaste system shall be Operable and used, as applicable, in accordance with a Process Control Program for solidification and packaging of radioactive wastes to ensure meeting the requirements of 10 CFR Part 20 and of 10 CFR Part 71 prior to shipment of radioactive wastes from the site.

b. With the packaging requirements of 10 CFR Part 20 or 10 CFR Part 71 not satisfied, suspend shipments of defectively packaged solid radioactive wastes from the site.

4.0 SURVEILLANCE REQUIREMENTS

C. Solid Radioactive Waste

1. Solid Radioactive System

a. The Process Control Program (PCP) shall be used to verify the Solidification of at least one representative test specimen from at least every tenth batch of each type of wet radioactive waste (e.g. filter sludges, spent resins, and chemical solutions).

b. If any test specimen fails to verify Solidification, the Solidification of the batch under test shall be suspended until such time as additional test specimens can be obtained, alternative Solidification parameters can be determined in accordance with the PCP, and a subsequent test verifies Solidification. Solidification of the batch may then be resumed using the alternative Solidification parameters determined by the PCP.

c. If the initial test specimen from a batch of waste fails to verify Solidification, the PCP shall provide for the collection and testing of representative test specimens from each consecutive batch of the same type of wet waste until at least three consecutive initial test specimens demonstrate Solidification. The PCP shall be modified as required, as provided for in Section 6 of the Technical Specifications.

3.0 LIMITING CONDITIONS FOR OPERATION

D. Dose from All Uranium Fuel Cycle Sources

1. The dose or dose commitment to any member of the general public from all uranium fuel cycle sources is limited to ≤25 mrem to the total body or any organ (except for the thyroid, which is limited to ≤75 mrem) over a period of 12 consecutive months.

2. With the calculated dose from the release of radioactive materials in liquid or gaseous effluents exceeding twice the limits of Specifications 3.8.A.2.a.1, 3.8.A.2.a.2, 3.8.B.2.a.1, 3.8.B.2.a.2, 3.8.B.3.a.1, or 3.8.B.3.a.2, prepare and submit within 30 days a special report to the Commission which defines corrective actions and calculates the highest radiation exposure to any member of the general public from all uranium fuel cycle sources (including all effluent pathways and direct radiation). Unless this report shows that exposures are less than the 40 CFR Part 190 standard, either apply to the Commission for a variance to continue releases which exceed the 40 CFR Part 190 standard or reduce subsequent releases to permit the standard to be met.

4.0 SURVEILLANCE REQUIREMENTS

D. Dose from All Uranium Fuel Cycle Sources

1. Cumulative dose contributions from all liquid and gaseous effluents shall be determined in accordance with Specifications 4.8.A.2.a, 4.8.B.2.a, and 4.8.B.3.a and in accordance with the ODCM.

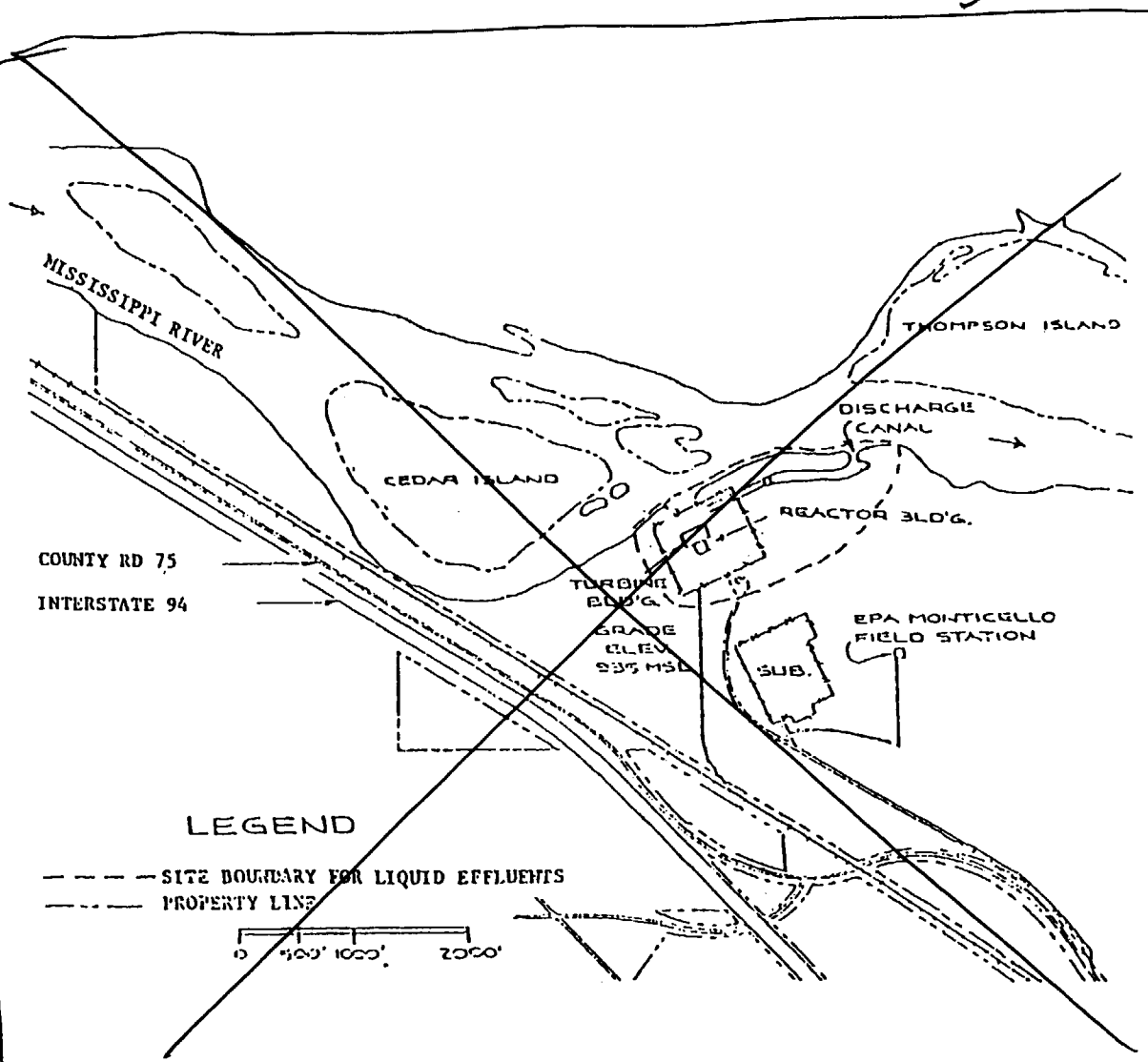

Figure 3.8.1 Monticello Nuclear Generating Plant Site Boundary for Liquid Effluents

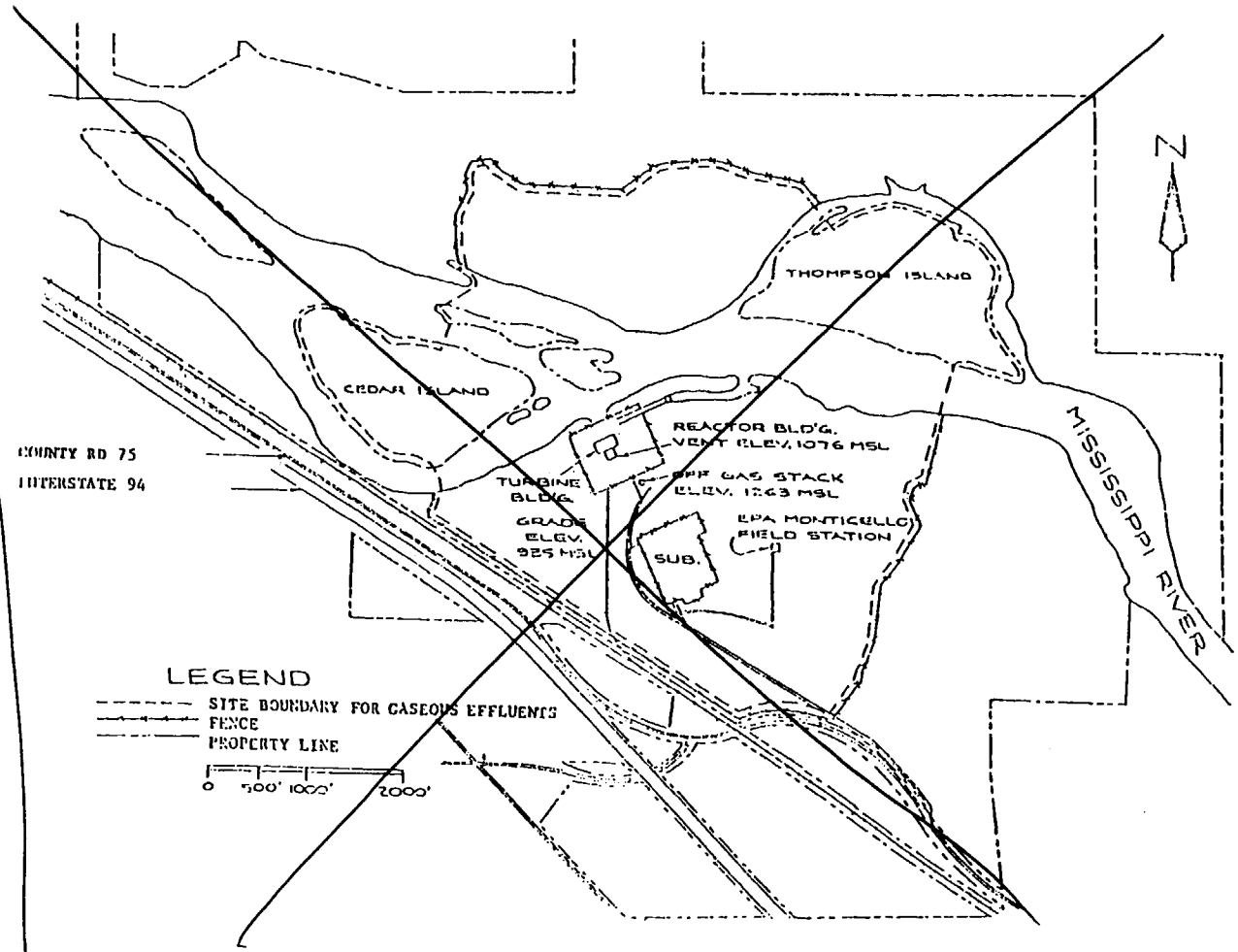

Figure 3.8.2 Monticello Nuclear Generating Plant Site Boundary for Gaseous Effluents

TABLE 3.8.1 - RADIOACTIVE LIQUID EFFLUENT MONITORING INSTRUMENTATION
(Page 1 of 2)

Instrument	Minimum Channels Operable	Applicability	Action if Minimum Channels not operable
Liquid Radwaste Effluent Line Gross Radioactivity Monitor	1	During Release of Liquid Radwaste	Liquid radwaste releases may continue for up to 14 days provided that prior to initiating a release: a. At least two independent samples are analyzed in accordance with Specification 4.8.A.1.b. b. At least two technically qualified members of the Facility Staff independently verify the release rate calculations and discharge line valving; Otherwise, suspend release of radioactive effluents via this pathway.
Liquid Radwaste Effluent Line Flow Instrument	1	During Release of Liquid Radwaste	Liquid radwaste releases via this pathway may continue for up to 30 days provided the flow rate is estimated at least once every four hours during actual releases. Pump curves may be used to estimate flow.
Discharge Canal Flow Measurement: - Open Cycle Mode - Closed/Helper Cycle Mode	 1 1	During Release of Liquid Radwaste	Effluent releases via this pathway may continue for up to 30 days provided the flow rate is estimated at least once every four hours during actual releases. Pump curves may be used to estimate flow.
Discharge Canal Gross Radioactivity Monitor*	1	At all times	Effluent releases may continue for up to 30 days provided that at least once every 8 hours a grab sample shall be collected and analyzed for gross beta at an LLD of 10^{-7} μCi/ml or gamma isotopic for principle gamma emitters at an LLD of 5.0×10^{-7} μCi/ml.
Service Water Discharge Pipe Gross Radioactivity Monitor*	1	At all times	Service water discharge may continue for up to 30 days provided that at least once every 8 hours a grab sample shall be collected and analyzed for gross beta at an LLD of 10^{-7} μCi/ml or gamma isotopic for principle gamma emitters at an LLD of 5.0×10^{-7} μCi/ml.

* - Indicates monitor provided with automatic alarm

TABLE 3.8.1 - RADIOACTIVE LIQUID EFFLUENT MONITORING INSTRUMENTATION
(Page 2 of 2)

Instrument	Minimum Channels Operable	Applicability	Action if Minimum Channels not operable
Turbine Building Normal Sump Monitor*	1	At all times	Liquid sump releases may continue for up to 30 days provided that at least once every 8 hours a grab sample shall be collected and analyzed for gross beta at an LLD of 10^{-7} μCi/ml or gamma isotopic for principle gamma emitters at an LLD of 5.0×10^{-7} μCi/ml.
Level Monitors for Temporary Outdoor Tanks Holding Radioactive Liquid	1	When tanks are in use	Liquid additions to a tank may continue for up to 30 days provided the tank liquid level is estimated during all liquid additions.

* - Indicates monitor provided with automatic alarm.

TABLE 3.8.2 - ~~RADIOACTIVE GASEOUS EFFLUENT MONITORING~~ (Main Condenser Offgas) INSTRUMENTATION

~~(Page 1 of 2)~~

Instrument	Minimum Channels Operable	Applicability	Action if Minimum Channels not Operable
Main Condenser Air Ejector Noble Gas Activity Monitor	2	During air ejector operation	From and after the date that one of the two steam jet air ejector off-gas radiation monitors is made or found to be inoperable, continued reactor power operation is permissible provided the inoperable radiation monitor instrument channel is tripped. Upon loss of both steam jet air ejector off-gas radiation monitors, be in Hot Standby within six hours.
Main Condenser Offgas Treatment System Hydrogen Monitors	2	During air ejector operation	Operation may continue for up to 14 days with one Operable channel per operating recombiner train. With all channels inoperable, be in Hot Standby within six hours.
Plant Stack			
Wide Range Noble Gas Activity Monitors*	1	At all times	Releases via this pathway may continue for up to 30 days provided grab samples are taken and analyzed at least once every 8 hours.
Iodine Sampler Cartridge	1	At all times	Releases via this pathway may continue for up to 30 days provided within 8 hours samples are continuously collected with auxiliary sampling equipment as required by Table 4.8.4.
Particulate Sampler Filter	1	At all times	Releases via this pathway may continue for up to 30 days provided within 8 hours samples are continuously collected with auxiliary sampling equipment as required by Table 4.8.4.
Stack Flow Monitor	1	At all times	Releases via the pathway may continue for up to 30 days provided the flow rate is estimated at least once every 4 hours.
Sample Flow Instrument	1	At all times	Releases via the pathway may continue for up to 30 days provided the flow rate is estimated at least once every 4 hours.

~~TABLE 3.8.2 - RADIOACTIVE GASEOUS EFFLUENT MONITORING INSTRUMENTATION~~
~~(Page 2 of 2)~~

Instrument	Minimum Channels Operable	Applicability	Action if Minimum Channels not Operable
Reactor Building Vent (includes Turbine Building & Radwaste Building releases)			
Wide Range Noble Gas Activity Monitors**	1	At all times	Releases via this pathway may continue for up to 30 days provided grab samples are taken and analyzed at least once every 8 hours.
Iodine Sampler Cartridge	1	At all times	Releases via the pathway may continue for up to 30 days provided within 8 hours samples are continuously collected with auxiliary sampling equipment as required by Table 4.8.4.
Particulate Sampler Cartridge	1	At all times	Releases via the pathway may continue for up to 30 days provided within 8 hours samples are continuously collected with auxiliary sampling equipment as required by Table 4.8.4.
Duct Flow Monitors	1	At all times	Releases via this pathway may continue for up to 30 days provided the flow rate is estimated at least once every 4 hours.
Sample Flow Instruments	1	At all times	Releases via this pathway may continue for up to 30 days provided the flow rate is estimated at least once every 4 hours.

Notes:

- Indicates number of channels required per operating recombiner train.
* - Provides automatic termination of offgas treatment system releases.
** - Provides control room indication prior to exceeding 10 CFR Part 20 release limits.

TABLE 4.8.1 RADIOACTIVE LIQUID EFFLUENT MONITORING INSTRUMENTATION SURVEILLANCE REQUIREMENTS

Instrument	Sensor Check Frequency	Source Check Frequency	Functional Test Frequency	Calibration Frequency
Liquid Radwaste Effluent Line Gross Radioactivity Monitor	Daily during release	Immediately Prior to Each Release	Within 3 months prior to making a release	Within 12 months prior to making a release.*
Liquid Radwaste Effluent Line Flow Instrument	Daily during release	-	Within 3 months prior to making a release	Within 12 months prior to making a release.
Instruments used in Determination of Discharge Canal Flow	Daily during release	-	Within 3 months prior to making a release	Within 18 months prior to making a release.
Service Water Discharge Pipe Gross Radioactivity Monitor	Daily	Monthly	Quarterly	Each Operating Cycle*
Discharge Canal Gross Radioactivity Monitor	Daily	Monthly	Quarterly	Each Operating Cycle**
Turbine Building Normal Drain Sump Monitor	Daily	Monthly	Quarterly	Each Operating Cycle
Level Monitors for Temporary Outdoor Tanks Holding Radioactive Liquid	Daily when in use	-	Quarterly when in use	Each Operating Cycle when in use

* - The initial Instrument Calibration shall be performed using one or more of the reference standards certified by the National Bureau of Standards (NBS) or using sources traceable to NBS standards. These standards shall permit calibrating the system over its intended range of energy and measurement range. For subsequent calibration sources that have been related to the initial calibration shall be used.

** - An initial Instrument Calibration was performed using a liquid reference standard over the systems intended range of energy and measurement range. Solid calibration sources traceable to NBS Standards currently being applied for instrument calibrations were related to the initial calibration. If, in the future, the canal radioactivity monitor is replaced, the following conditions shall apply:

a. Detector response and system efficiency shall be equal to or better than the present system.

b. Footnote (*) shall apply.

Main Condenser Offgas

TABLE 4.8.~~2~~1 ~~RADIOACTIVE GASEOUS EFFLUENT MONITORING~~ INSTRUMENTATION
SURVEILLANCE REQUIREMENTS
~~(Page 1 of 2)~~

Instrument	Sensor Check Frequency	Source Check Frequency	Functional Test Frequency	Calibration Frequency
Main Condenser Air Ejector Noble Gas Activity Monitors	Daily during air ejector operation	-	Quarterly	Once each Operating Cycle
Main Condenser Offgas Treatment System Hydrogen Monitors	Daily during air ejector operation	-	Monthly	Quarterly #
Plant Stack Wide Range Noble Gas Activity Monitors	Daily	Monthly	Quarterly	Once each Operating Cycle*
Plant Stack Iodine and Particulate Samplers	Weekly	-	-	-
Plant Stack Flow Monitor	Daily	-	-	Once each Operating Cycle
Plant Stack Sample Flow Instruments	Daily	-	-	Once each Operating Cycle

TABLE 4.8.2 RADIOACTIVE GASEOUS EFFLUENT MONITORING INSTRUMENTATION
SURVEILLANCE REQUIREMENTS
(Page 2 of 2)

Instrument	Sensor Check Frequency	Source Check Frequency	Functional Test Frequency	Calibration Frequency
Reactor Building Vent Wide Range Noble Gas Activity Monitors	Daily	Monthly	Quarterly	Once each Operating Cycle*
Reactor Building Vent Iodine and Particulate Samplers	Weekly	-	-	-
Reactor Building Vent Duct Flow Monitors	Daily	-	-	Once each Operating Cycle
Reactor Building Vent Sample Flow Instruments	Daily	-	-	Once each Operating Cycle

* - The initial Instrument Calibration shall be performed using one or more of the reference standards certified by the National Bureau of Standards (NBS) or using sources traceable to NBS standards. These standards shall permit calibrating the system over its intended range of energy and measurement range. For subsequent calibration sources that have been related to the initial calibration shall be used.

\# - The Calibration shall include the use of standard gas samples containing a nominal four volume percent hydrogen.

TABLE 4.8.3 - RADIOACTIVE LIQUID WASTE SAMPLING AND ANALYSIS PROGRAM
(Page 1 of 3)

Liquid Release Type	Sampling Frequency	Minimum Analysis Frequency	Type of Activity Analysis	Lower Limit of Detection (LLD) (uci/ml)[a,e]
Batch Waste Release Tanks[b]	Each Batch	Each Batch	Principal Gamma Emitters[d]	5×10^{-7}
			I-131	1×10^{-6}
	One Batch Each Month	One Batch Each Month	Dissolved and Entrained Gases	1×10^{-5}
	Each Batch	Monthly Composite[c]	H-3	1×10^{-5}
			Gross alpha	1×10^{-7}
	Each Batch	Quarterly Composite[c]	Sr-89, Sr-90	5×10^{-8}
			Fe-55	1×10^{-6}

TABLE 4.8.3 - RADIOACTIVE LIQUID WASTE SAMPLING AND ANALYSIS PROGRAM (Continued)
(Page 2 of 3)

Notes

a - The LLD is the smallest concentration of radioactive material in a sample that will be detected with 95% probability with 5% probability of falsely concluding that a blank observation represents a "real" signal.

For a particular measurement system (which may include radiochemical separation):

$$LLD = \frac{4.66\, s_b}{E \cdot V \cdot 2.22 \cdot Y \cdot \exp(-\lambda \Delta t)}$$

where:

LLD is the a priori lower limit of detection as defined above (as picocurie per unit mass or volume),

s_b is the standard deviation of the background counting rate or of the counting rate of a blank sample as appropriate (as counts per minute). Typical values of E, V, Y and Δt shall be used in the calculations.

E is the counting efficiency (as counts per transformation),

V is the sample size (in units of mass or volume),

2.22 is the number of transformations per minute per picocurie,

Y is the fractional radiochemical yield (when applicable),

λ is the radioactive decay constant for the particular radionuclide, and

Δt is the elapsed time between midpoint of sample collection and time of counting.

TABLE 4.8.3 - RADIOACTIVE LIQUID WASTE SAMPLING AND ANALYSIS PROGRAM (Continued)
(Page 3 of 3)

b. A batch release is the discharge of liquid wastes of a discrete volume. Prior to sampling for analyses, each batch shall be isolated and then thoroughly mixed to assure representative sampling.

c. A composite sample is one in which the quantity of liquid sampled is proportional to the quantity of liquid waste discharged and in which the method of sampling employed results in a specimen which is representative of the liquids released.

d. The principle gamma emitters for which the LLD specification will apply are exclusively the following radionuclides: Mn-54, Fe-59, Co-58, Co-60, Zn-65, Mo-99, Cs-134, Cs-137, Ce-141, and Ce-144. This list does not mean that only these nuclides are to be detected and reported. Other peaks which are measurable and identifiable, together with the above nuclides, shall also be identified and reported.

e. Nuclides which are below the LLD for the analyses shall be reported as "less than" the LLD of the nuclide and should not be reported as being present at the LLD level for that nuclide. The "less than" values shall not be used in the required dose calculations. When unusual circumstances result in LLD's higher than required, the reasons shall be documented in the Semiannual Radioactive Effluent Release Report.

TABLE 4.8.4 - RADIOACTIVE GASEOUS WASTE SAMPLING AND ANALYSIS PROGRAM
(Page 1 of 2)

Gaseous Release Type	Sampling Frequency	Minimum Analysis Frequency	Type of Activity Analysis	Lower Limit of Detection (LLD) (uci/ml)[a,e,f]
Containment Purge	Each Purge Grab Sample	Each Purge	Principal Gamma Emitters(f)	1×10^{-4}
			H-3[h]	1×10^{-6}
Plant Stack and Reactor Building Vent	Monthly[b] Grab Sample	Monthly	Principal Gamma Emitters(f)	1×10^{-4}
			H-3[i]	1×10^{-6}
	Continuous[g]	Weekly[c] Charcoal Sample	I-131 I-133	1×10^{-12} 1×10^{-10}
	Continuous[g]	Weekly[c] Particulate Sample	Principal Gamma Emitters (I-131, Others)	1×10^{-11}
	Continuous[g]	Monthly[d] Composite Particulate Sample	Gross alpha	1×10^{-11}
	Continuous[g]	Quarterly[d] Composite Particulate Sample	Sr-89, Sr-90	1×10^{-11}
	Continuous[g]	Continuous monitor	Gross gamma or gross beta noble gas activity	1×10^{-6}

TABLE 4.8.4 - RADIOACTIVE GASEOUS WASTE SAMPLING AND ANALYSIS PROGRAM (Continued)
(Page 2 of 2)

Notes:

a. The LLD is the smallest concentration of radioactive material in a sample that will be detected with 95% probability with 5% probability of falsely concluding that a blank observation represents a "real" signal. Note (a) of Table 4.8.3 is applicable.

b. Grab samples taken at the discharge of the plant stack and reactor building vent are generally below minimum detectable levels for most nuclides with existing analytical equipment. For this reason, isotopic analysis data, corrected for holdup time, for samples taken at the steam jet air ejector may be used to calculate noble gas ratios.

c. Whenever the steady state radioiodine concentration is greater than 10 percent of the limit of Specification 3.6.C.1, daily sampling of reactor coolant for radioactive iodines of I-131 through I-135 is required. Whenever a change of 25% or more in calculated Dose Equivalent I-131 is detected under these conditions, the iodine and particulate collection devices for all release points shall be removed and analyzed daily until it is shown that a pattern exists which can be used to predict the release rate. Sampling may then revert to weekly. When samples collected for one day are analyzed, the corresponding LLD's may be increased by a factor of 10. Samples shall be analyzed within 48 hours after removal.

d. To be representative of the average quantities and concentrations of radioactive materials in particulate form in gaseous effluents, samples should be collected in proportion to the rate of flow of the effluent streams.

e. The principal gamma emitters for which the LLD specification will apply are exclusively the following radionuclides: Kr-87, Kr-88, Xe-133, Xe-133m, Xe-135, and Xe-138 for gaseous emissions and Mn-54, Fe-59, Co-58, Co-60, Zn-65, Mo-99, Cs-134, Cs-137, Ce-141, and Ce-144 for particulate emissions. This list does not mean that only these nuclides are to be detected and reported. Other peaks which are measurable and identifiable, together with the above nuclides, shall also be identified and reported.

f. Nuclides which are below the LLD for the analyses shall be reported as "less than" the LLD of the nuclide and should not be reported as being present at the LLD level for that nuclide. The "less than" values shall not be used in the required dose calculations. When unusual circumstances result in LLD's higher than reported, the reasons shall be documented in the semiannual effluent report.

g. The ratio of the sample flow rate to the sampled stream flow rate shall be known for the time period sampled.

h. H^3 analysis shall not be required prior to purging if the limits of 3.8.B.1 are satisfied for other nuclides. However, the H^3 analysis shall be completed within 24 hours after sampling.

i. In lieu of grab samples, continuous monitoring with bi-weekly analysis using silica-gel samplers may be provided.

Bases 3.8/4.8:

A. Liquid Effluents

Specification 3.8.A.1 is provided to ensure that the concentration of radioactive materials released in liquid waste effluents from the site will be less than the concentration levels specified in 10 CFR Part 20, Appendix B, Table II. This limitation provides additional assurance that the levels of radioactive materials in the Mississippi River will not result in exposures exceeding (1) the Section II.A design objectives of Appendix I, 10 CFR Part 50, to an individual and (2) the limits of 10 CFR Part 20.106(e) to the population. The concentration limit for noble gases is based upon the assumption that Xe-135 is the controlling radioisotope and its MPC in air (submersion) was converted to an equivalent concentration in water using the methods described in International Commission on Radiological Protection (ICRP) Publication 2.

Specification 3.8.A.2.a is provided to implement the requirements of Sections II.A, III.A and IV.A of Appendix I, 10 CFR Part 50. The Limiting Condition for Operation implements the guides set forth in Section II.A of Appendix I. Action required by Specification 3.8.A.2.b provides the required operating flexibility and at the same time implements the guides set forth in Section IV.A of Appendix I to assure that the releases of radioactive material in liquid effluents will be kept "as low as is reasonably achievable". Considering that the nearest drinking water supply using the receiving water is 33 river miles downstream, there is reasonable assurance that the operation of the facility will not result in radionuclide concentrations in the finished drinking water that are in excess of the requirements of 40 CFR 141. The dose calculations in the ODCM implement the requirements in Section III.A of Appendix I that conformance with the guides of Appendix I be shown by calculational procedures based on models and data such that the actual exposure of an individual through appropriate pathways is unlikely to be substantially underestimated. The equations specified in the ODCM for calculating the doses due to the actual release rates of radioactive materials in liquid effluents will be consistent with the methodology provided in Regulatory Guide 1.109, "Calculation of Annual Doses to Man from Routine Releases of Reactor Effluents for the Purpose of Evaluating Compliance with 10 CFR Part 50, Appendix I," Revision 1, October 1977 and Regulatory Guide 1.113, "Estimating Aquatic Dispersion of Effluents from Accidental and Routine Reactor Releases for the Purpose of Implementing Appendix I, Revision 1," April 1977. NUREG-0133, October, 1978, provides methods for dose calculations consistent with Regulatory Guides 1.109 and 1.113.

Bases 3.8/4.8 (Continued):

Specification 3.8.A.3 provides assurance that the liquid radwaste treatment system will be available for use whenever liquid effluents require treatment prior to release to the environment. The requirements that the appropriate portions of this system be used when specified provides assurance that the releases of radioactive materials in liquid effluents will be kept "as low as is reasonably achievable." This specification implements the requirements of 10 CFR Part 50.36a, General Design criterion 60 of Appendix A to 10 CFR Part 50 and design objective Section II.D of Appendix I to 10 CFR Part 50. The specified limits governing the use of appropriate portions of the liquid radwaste treatment system were specified as a suitable fraction of the guide set forth in Section II.A of Appendix I, 10 CFR Part 50, for liquid effluents.

Restrictions on the quantity of radioactive liquid material contained in tanks are required only for temporary tanks. All exterior permanent tanks are diked to prevent release of their contents in the event of leakage. Restricting the quantity of radioactive material contained in the specified tanks provides assurance that in the event of an uncontrolled release of the tanks' contents, the resulting concentrations would be less than the limits of 10 CFR Part 20, Appendix B, Table II, Column 2, at the nearest potable water supply and the nearest surface water supply in an unrestricted area.

Surveillance requirements for continuous liquid release points are not provided since all Monticello releases are "batch" type releases.

Radioactive liquid effluent instrumentation is provided to monitor and control, as applicable, the releases of radioactive materials in liquid effluents during actual or potential releases of liquid effluents. The alarm setpoints for these instruments will be calculated in accordance with NRC approved methods in the ODCM to ensure that the alarm will occur prior to exceeding the limits of 10 CFR Part 20. The operability requirements for instrumentation are consistent with the requirements of General Design Criteria 60, 63 and 64 of Appendix A to 10 CFR Part 50.

Bases 3.8/4.8 (Continued):

B. Gaseous Effluents

Specification 3.8.B.1.a is provided to ensure that the dose rate at anytime at the site boundary from gaseous effluents will be within the annual dose limits of 10 CFR Part 20 for unrestricted areas. The annual dose limits are the doses associated with the concentrations of 10 CFR Part 20, Appendix B, Table II. These limits provide reasonable assurance that radioactive material discharged in gaseous effluents will not result in the exposure of an individual in an unrestricted area, to annual average concentrations exceeding the limits specified in Appendix B, Table II of 10 CFR Part 20 (10 CFR Part 20.106(b)). For individuals who may at times be within the restricted area boundary, the occupancy of the individual will be sufficiently low to compensate for any increase in the atmospheric diffusion factor above that for the restricted area boundary. The specified release rate limits restrict, at all times, the corresponding gamma and beta dose rates above background to an individual at or beyond the restricted area boundary to 500 mrem/year to the total body or to 3000 mrem/year to the skin. These release rate limits also restrict, at all times, the corresponding thyroid dose rate above background to $\leq$ 1500 mrem/year at the site boundary.

Specification 3.8.B.2.a is provided to implement the requirements of Sections II.B, III.A and IV.A of Appendix I, 10 CFR Part 50. The Limiting Conditions for Operation implement the guides set forth in Section II.B of Appendix I. Action required by Specification 3.8.B.2.b provides the required operating flexibility and at the same time implement the guides set forth in Section IV.A of Appendix I assure that the releases of radioactive material in gaseous effluents will be kept "as low as is reasonably achievable." The Surveillance Requirements implement the requirements in Section III.A of Appendix I that conformance with the guides of Appendix I is to be shown by calculational procedures based on models and data such that the actual exposure of an individual through the appropriate pathways is unlikely to be substantially underestimated. The dose calculations established in the ODCM for calculating the doses due to the actual release rates of radioactive noble gases in gaseous effluents will be consistent with the methodology provided in Regulatory Guide 1.109, "Calculation of Annual Doses to Man from Routine Releases of Reactor Effluents for the Purpose of Evaluating Compliance with 10 CFR Part 50, Appendix I," Revision 1, October 1977 and Regulatory Guide 1.111, "Methods for Estimating Atmospheric Transport and Dispersion of Gaseous Effluents in Routine Releases from Light-Water-Cooled Reactors," Revision 1, July 1977. The ODCM equations provided for determining the air doses at the restricted area boundary may be based upon the historical average atmospheric conditions. NUREG-0133, October, 1978 provides methods for dose calculations consistent with Regulatory Guides 1.109 and 1.111.

Bases 3.8/4.8 (Continued):

Specification 3.8.B.3.a is provided to implement the requirements of Sections II.C, III.A and IV.A of Appendix I, 10 CFR Part 50. The Limiting Conditions for Operation are the guides set forth in Section II.C of Appendix I. The release rate specifications for I-131, tritium, and radioactive particulates with half-lives greater than eight days are dependent on the existing radionuclide pathways to man in the unrestricted area. The pathways which are examined in the development of these calculations are: 1) individual inhalation of airborne radionuclides, 2) deposition of radionuclides onto green leafy vegetation with subsequent consumption by man, 3) deposition onto grassy areas where milk animals and meat producing animals graze with consumption of the milk and meat by man, and 4) deposition on the ground with subsequent exposure of man.

Specification 3.8.B.4 provides assurance that the offgas treatment system will be in operation whenever main condenser offgas is released to the environment. The requirement that the appropriate portions of this system be used when specified provides reasonable assurance that the releases of radioactive materials in gaseous effluents will be kept "as low as is reasonably achievable." This specification implements the requirements of 10 CFR Part 50.36a, General Design Criterion 60 of Appendix A to 10 CFR Part 50, and design objective Section IID of Appendix I to 10 CFR Part 50. The specified limits governing the use of appropriate portions of the systems were specified as a suitable fraction of the guide set forth in Sections II.B and II.C of Appendix I, 10 CFR Part 50, for gaseous effluents.

Radioactive gaseous effluent instrumentation is provided to monitor and control, as applicable, the releases of radioactive materials in gaseous effluents during actual or potential releases of gaseous effluents. The alarm/trip setpoints for these instruments will be calculated in accordance with NRC approved methods in the ODCM to ensure that the alarm/trip will occur prior to exceeding the limits of 10 CFR Part 20. The operability requirements for this instrumentation are consistent with the requirements of General Design Criteria 60, 63 and 64 of Appendix A to 10 CFR Part 50.

Specification 3.8.B.4.c is provided to ensure that the concentration of potentially explosive gas mixtures contained in the compressed storage subsystem is maintained below the flammability limits of hydrogen and oxygen. Automatic control features are included in the system to prevent the hydrogen and oxygen concentrations from reaching these flammability limits. Maintaining the concentration of hydrogen below the flammability limit provides assurance that the releases of radioactive materials will be controlled in conformance with the requirements of General Design Criterion 60 of Appendix A to 10 CFR Part 50.

Specification 3.8.B.4.e is provided to limit the radioactivity which can be stored in one decay tank. Restricting the quantity of radioactivity contained in each gas storage tank provides assurance that in the event of an uncontrolled release of the tanks contents, the resulting total body exposure to an individual at the site restricted area boundary will not exceed 20 mrem. A flow restrictor in the discharge line of the decay tanks prevents a tank from being discharged at an uncontrolled rate. In addition, interlocks prevent the contents of a tank from being released with less than 12 hours of holdup.

A.1 Specification 3.8.B.5 establishes a maximum activity at the steam jet air ejector. Restricting the gross radioactivity rate of noble gases from the main condenser provides reasonable assurance that the total body exposure to an individual at the restricted area boundary will not exceed the limits of 10 CFR Part 20 in the event this effluent is inadvertently discharged directly to the environment with minimal treatment. This specification implements the requirements of General Design Criteria 60 and 64 of Appendix A to 10 CFR Part 50.

Specification 3.8.B.6 requires the containment to be purged and vented through the standby gas treatment system except during inerting and deinerting operations. This provides for iodine and particulate removal from the containment atmosphere. During outages when the containment is opened for maintenance, the containment ventilation exhaust is directed to the monitored reactor building vent. Use of the 2-inch flow path prevents damage to the standby gas treatment system in the event of a loss of coolant accident during purging or venting. Use of the reactor building plenum and vent flow path for inerting and deinerting operations permits the control room operators to monitor the activity level of the resulting effluent by use of the Reactor Building Vent Wide Range Gas Monitors. In the event that the reactor building release rate exceeds the Reactor Building Vent Wide Range Gas Monitor alarm settings, the monitors will alarm in the control room alerting the operators to take actions to limit the release of gaseous radioactive effluents. The alarm settings for the reactor building vent wide range gas monitors are calculated in accordance with the NRC approved methods in the ODCM to ensure that alarms will alert control room operators prior to the limits of specification 3.8.B.1 being exceeded.

C. Solid Radioactive Waste

Specification 3.8.C.1 provides assurance that the solid radwaste system will be used whenever solid radwastes require processing and packaging prior to being shipped offsite. This specification implements the requirements of 10 CFR Part 50.36a and General Design Criteria 60 of Appendix A to 10 CFR Part 50.

Next page is 199

Bases 3.8/4.8 (Continued):

D. Dose from All Uranium Fuel Cycle Sources

Specification 3.8.D is provided to meet the dose limitations of 40 CFR 190. The specification requires the preparation and submittal of a special report whenever the calculated doses from plant radioactive effluents exceed twice the design objective doses of Appendix I. Submittal of the report is considered a timely request and a variance is granted until Staff action on the request is complete. For sites containing up to 4 reactors, it is highly unlikely that the resultant dose to a real individual will exceed 40 CFR 190 if the individual reactors remain with the reporting requirement level. For the purpose of the special report it may be assumed that the dose commitment to the real individual from other uranium fuel cycle sources is negligible, with the exception that dose contributions from other nuclear fuel cycle facilities at the same site or within a radius of 5 miles must be considered.

Bases 3.11 (Continued):

This limit was determined based upon bounding analyses for the limiting transient at the given core power level.

At thermal power levels less than or equal to 25% of rated thermal power, operating plant experience indicates that the resulting MCPR value is in excess of requirements by a considerable margin. MCPR evaluation below this power level is therefore unnecessary. The daily requirement for calculating MCPR above 25% of rated thermal power is sufficient since power distribution shifts are very slow when there have not been significant power or control rod changes.

Those abnormal operational transients, analyzed in FSAR Section 14.5, which result in an automatic reactor scram are not considered a violation of the LCO. Exceeding MCPR limits in such cases need not be reported.

References

1. "General Electric Company Analytical Model for Loss-of-Coolant Analysis in Accordance with 10 CFR 50, Appendix K", NEDE-20566, November, 1975.

2. "Loss-of-Coolant Accident Analysis Report for the Monticello Nuclear Generating Plant", NEDO-24050-1, December, 1980, L O Mayer (NSP) to Director of Nuclear Reactor Regulation (USNRC), February 6, 1981.

Bases 4.11

The APLHGR, LHGR and MCPR shall be checked daily to determine if fuel burnup, or control rod movement have caused changes in power distribution. Since changes due to burnup are slow, and only a few control rods are removed daily, a daily check of power distribution is adequate. For a limiting value to occur below 25% of rated thermal power, an unreasonably large peaking factor would be required, which is not the case for operating control rod sequences. In addition, the MCPR is checked whenever changes in the core power level or distribution are made which have the potential of bringing the fuel rods to their thermal-hydraulic limits.

NEXT PAGE IS 223

3.0 LIMITING CONDITIONS FOR OPERATION

3.12 SEALED SOURCE CONTAMINATION

Applicability:

Applies to each sealed source containing more than 0.1 microcurie of plutonium or other special nuclear material (including alpha radiation) and to each sealed source containing more than the exempt quantities of byproduct materials listed in 10 CFR 30.71.

Objective:

To assure that leakage from sealed sources containing byproduct and special nuclear radioactive materials does not exceed allowable limits.

Specification:

A. Contamination

1. Each sealed source shall be free of removable contamination in excess of 0.005 microcuries per 100% smear test.

4.0 SURVEILLANCE REQUIREMENTS

4.12 SEALED SOURCE CONTAMINATION

Applicability:

Applies to the periodic testing of sealed sources containing more than 0.1 microcurie of plutonium or other special nuclear material (including alpha radiation) and to each sealed source containing more than the exempt quantities of byproduct materials listed in 10 CFR 30.71.

Objective:

To verify the leak tightness of sealed radioactive sources.

Specification:

A. Contamination

1. Tests for leakage and/or contamination shall be performed by the licensee or by other persons specifically authorized by the Commission or an agreement State, as follows:

3.0 LIMITING CONDITIONS FOR OPERATION	4.0 SURVEILLANCE REQUIREMENTS
2. Each sealed source with removable contamination in excess of the limit in 3.12.A.1 shall be immediately withdrawn from use and: a. Either decontaminated and repaired, or b. Disposed of in accordance with the regulations of the Commission.	a. Each sealed source, except startup sources subject to core flux, containing radioactive material, other than Hydrogen 3, with a half-life greater than 30 days and in any form other than gas shall be tested for leakage and/or contamination at intervals not to exceed six months. b. The periodic leak test required does not apply to sealed sources that are stored and not being used. The sources exempted from this test shall be tested for leakage prior to any use or transfer to another user unless they have been leak tested within six months prior to the date of use or transfer. In the absence of a certificate from a transferor indicating that a test has been made within six months prior to the transfer, sealed sources shall not be put into use until tested for leakage. c. Startup sources shall be leak tested prior to and following any repair or maintenance and before being subjected to core flux.

3.0 LIMITING CONDITIONS FOR OPERATION	4.0 SURVEILLANCE REQUIREMENTS
	2. The leakage test shall be capable of detecting the presence of 0.005 microcuries of radioactive material per 100% smear test of the sample. B. Records 1. A complete inventory of radioactive materials in possession shall be maintained current at all times. 2. The following records shall be retained for two years: a. Test results in microcuries, for tests performed pursuant to 4.12.A. b. Record of annual physical inventory verifying accountability of sources on record.

Bases 3.12/4.12

The program, facilities, personnel, and procedures for safe storage, handling, and use of sealed sources containing radioactive materials is described in Supplement No. 2 to the Application for Conversion of DPR-22 to Full Term, submitted by Northern States Power Company on August 16, 1974. The surveillance program described in these specifications is a part of the program to detect and control contamination of areas in the plant by such radioactive materials.

Small quantities of byproduct materials are exempt from licensing by 10 CFR 30.18 and therefore are exempt from leakage tests in these specifications. Inhalation or ingestion of such small quantities of byproduct materials from a sealed source would result in less than one maximum permissible body burden for total body irradiation. Sources containing less than 0.1 microcurie of plutonium are exempt from leakage tests by 10 CFR 70.39(c) and therefore such quantities of special nuclear materials (including alpha emitters) are exempt from leakage tests in these specifications. The acceptance criteria of less than 0.005 microcurie on the test sample is also based on 10 CFR 70.39(c).

Bases 3.15/4.15:

The inservice inspection program for the Monticello plant conforms to the requirements of 10 CFR 50, Section 50.55a(g). Where practical, the inspection of components classified into NRC Quality Groups A, B, and C conforms to the requirements of ASME Code Class 1, 2, and 3 components, respectively, contained in Section XI of the ASME Boiler and Pressure Vessel Code. A program of inservice testing of Quality Group A, B, and C pumps and valves is also in effect at the Monticello plant, that conforms to the requirements contained in Section XI of the ASME Boiler and Pressure Vessel Code or where alternate testing is justified in accordance with Generic Letter 89-04. If a Code required inspection is impractical for the Monticello facility, a request for a deviation from that requirement is submitted to the Commission in accordance with 10 CFR 50, Section 50.55a(g)(6)(i).

Deviations which are needed from the procedures prescribed in Section XI of the ASME Code and applicable Addenda will be reported to the Commission prior to the beginning of each 10-year inspection period if they are known to be required at that time. Deviations which are identified during the course of inspection will be reported quarterly throughout the inspection period.

NEXT PAGE IS 229u

3.0 LIMITING CONDITIONS FOR OPERATION	4.0 SURVEILLANCE REQUIREMENTS

4.16 RADIATION ENVIRONMENTAL MONITORING PROGRAM

Applicability:

Applies to the periodic monitoring and recording of radioactive effluents found in the plant environs.

Objective:

To provide for measurement of radiation levels and radioactivity in the site environs on a continuing basis.

Specification:

A. Sample Collection & Analysis

1. The Radiation Environmental Monitoring Program given in Table 4.16.1 shall be conducted. Radioanalysis shall be conducted meeting the requirements of Table 4.16.2.

   A map and a table identifying the locations of the sampling points shall be provided in the Offsite Dose Calculation Manual (ODCM).

2. Whenever the Radiation Environmental Monitoring Program is not being conducted as specified in Table 4.16.1, the Annual Radiation Environmental Monitoring Report shall include a description of the reasons for not conducting the program as required and plans for preventing a recurrence.

3.0 LIMITING CONDITIONS FOR OPERATION	4.0 SURVEILLANCE REQUIREMENTS

3. Deviations are permitted from the required sampling schedule if samples are unobtainable due to hazardous conditions, seasonable unavailability, or to malfunction of automatic sampling equipment. If the latter occurs, every effort shall be made to complete corrective action prior to the end of the next sampling period.

4. With the level of radioactivity in an environmental sampling medium exceeding the reporting levels of Table 4.16.3 when averaged over any calendar quarter, submit a special report to the Commission within 30 days from the end of the affected calendar quarter pursuant to Specification 6.7.C.2. When more than one of the radionuclides in Table 4.16.3 are detected in the sampling medium, this report shall be submitted if:

$$\frac{\text{concentration (1)}}{\text{limit level (1)}} + \frac{\text{concentration (2)}}{\text{limit level (2)}} + \ldots > 1.0$$

When radionuclides other than those in Table 4.16.3 are detected and are the result of plant effluents, this report shall be submitted if the potential annual dose to an individual is equal to or greater than the calendar year limits of Specifications 3.8.A.2, 3.8.B.2, or 3.8.B.3. This report is not required if the measured level of radioactivity was not the result of plant effluents; however, in such an event, the condition shall be reported and described in the Annual Radiation Environmental Monitoring Report.

3.0 LIMITING CONDITIONS FOR OPERATION	4.0 SURVEILLANCE REQUIREMENTS

5. Although deviations from the required sampling schedule are permitted under Item 3, above, whenever milk or leafy green vegetables can no longer be obtained from the designated sample locations required by Table 4.16.1, the Semi-annual Radioactive Effluent Release Report for this period shall explain why the samples can no longer be obtained and will identify the locations which will be added to and deleted from the monitoring program as soon as practicable.

B. Land Use Census

1. A land use census shall be conducted and shall identify the location of the nearest milk animal, the nearest residence, and the nearest garden of greater than 500 ft^2 producing fresh leafy vegetables, in each of the 16 meteorological sectors within a distance of five miles. The census shall also identify the locations of all milk animals and all 500 ft^2 or greater gardens producing broad leaf vegetation in each of the meteorological sectors within a distance of three miles. This census shall be conducted at least once per year between the dates of May 1 and October 31 by door to door survey, aerial survey, or by consulting local agricultural authorities associations.

3.0 LIMITING CONDITIONS FOR OPERATION	4.0 SURVEILLANCE REQUIREMENTS
	2. With a land use census identifying a location which yields a calculated dose or dose commitment (via the same exposure pathway) 20 percent greater than at a location from which samples are currently being obtained in accordance with Specification 4.16.A.1, the Semiannual Radioactive Effluent Release Report for this period shall identify the new location. The new location shall be added to the radiological environmental monitoring program within 30 days. The sampling location, excluding the control station location, having the lowest calculated dose or dose commitment (via the same exposure pathway) may be deleted from this monitoring program after October 31 of the year in which this land use census was conducted. C. Interlabotatory Comparison Program 1. Analyses shall be performed on radioactive materials supplied as part of an NRC approved interlaboratory comparison program as described in the ODCM. 2. The results of analyses performed as a part of the above required program shall be included in the Annual Radiation Environmental Monitoring Report. When required analyses are not performed, corrective action shall be reported in the Annual Radiation Environmental Monitoring Report.

Table 4.16.1
(Page 1 of 5)

MONTICELLO NUCLEAR GENERATING PLANT
RADIATION ENVIRONMENTAL MONITORING PROGRAM
SAMPLE COLLECTION AND ANALYSIS

Exposure Pathway and/or Sample	Number of Samples and Sample Locations**	Sampling and Collection Frequency	Type and Frequency of Analysis
1. Airborne			
Radioiodine & Particulates	Samples from 5 locations: 3 samples from offsite locations (in different sectors) of the highest calculated annual average ground level D/Q, 1 sample from the vicinity of a community having the highest calculated annual average ground-level D/Q, and 1 sample from a control location specified in the ODCM.	Continuous Sampler operation with sampler collection weekly.	Radioiodine analysis Weekly for I-131 Particulate: Gross beta activity on each filter weekly*. Analysis shall be performed more than 24 hours following filter change. Perform gamma isotopic analysis on composite (by location) sample quarterly.
2. Direct			
Radiation	37 TLD stations established with duplicate dosimeters placed at the following locations:	Quarterly	Gamma Dose quarterly

* If gross beta activity in any indication sample exceeds 10 times the yearly average of the control sample, a gamma isotopic analysis is required.

** Sample locations are given on the figure and table in the ODCM.

Table 4.16.1 (Continued)
(Page 2 of 5)

MONTICELLO NUCLEAR GENERATING PLANT
RADIATION ENVIRONMENTAL MONITORING PROGRAM
SAMPLE COLLECTION AND ANALYSIS

Exposure Pathway and/or Sample	Number of Samples and Sample Locations**	Sampling and Collection Frequency	Type and Frequency of Analysis
2. Direct Radiation (Con't.)			
	1. Using the 16 meterological wind sectors as guidelines, an inner ring of stations in the general area of the site boundary is established and an outer ring of stations at 4 to 5 mile distance from the plant site is established. Because of inacessibility, two sectors in the inner and outer rings are not covered. 2. Seven dosimeters are established at special interest areas and a control station.		
3. Waterborne			
a. Surface	Upstream & downstream locations	Monthly composite of weekly samples (water & ice conditions permitting)	Gamma Isotopic analysis of each monthly composite Tritium analysis of quarterly composites of monthly composites

** Sample locations are given on the figure and table in the ODCM.

Table 4.16.1 (Continued)
(Page 3 of 5)

MONTICELLO NUCLEAR GENERATING PLANT
RADIATION ENVIRONMENTAL MONITORING PROGRAM
SAMPLE COLLECTION AND ANALYSIS

Exposure Pathway and/or Sample	Number of Samples and Sample Locations**	Sampling and Collection Frequency	Type and Frequency of Analysis
3. Waterbourne (con't.)			
b. Ground	Three samples from wells within 5 miles of the plant site and one sample from a well greater than 10 miles from the plant site.	Quarterly	Gamma Isotopic and tritium analyses of each sample
c. Drinking	One sample from the City of Minneapolis water supply	Monthly composite of weekly samples.	I-131 Analysis and Gross beta and Gamma isotopic analysis of each monthly composite Tritium analysis of quarterly composites of monthly composites
d. Sediment from Shoreline	One sample upstream of plant, one sample downstream of plant, and one sample from shoreline of recreational area	Semiannually	Gamma isotopic analysis of each sample

** Sample locations are given on the figure and table in the ODCM.

Table 4.16.1 (Continued)
(Page 4 of 5)

MONTICELLO NUCLEAR GENERATING PLANT
RADIATION ENVIRONMENTAL MONITORING PROGRAM
SAMPLE COLLECTION AND ANALYSIS

Exposure Pathway and/or Sample	Number of Samples and Sample Locations**	Sampling and Collection Frequency	Type and Frequency of Analysis
4. Ingestion			
a. Milk	One sample from dairy farm having highest D/Q, one sample from each of three dairy farms calculated to have doses from I-131 >1 mrem/yr, and one sample from 10-20 miles	Monthly or biweekly if animals are on pasture	Gamma isotopic and I-131 analysis of each sample
b. Fish and Invertebrates	One sample of one game specie of fish located upstream and downstream of the plant site. One sample of Invertebrates upstream and downstream of the plant site.	Samples collected semi-annually	Gamma isotopic analysis on each sample (edible portion only on fish).

** Sample locations are given on the figure and table in the ODCM.

Table 4.16.1 (Continued)
(Page 5 of 5)

MONTICELLO NUCLEAR GENERATING PLANT
RADIATION ENVIRONMENTAL MONITORING PROGRAM
SAMPLE COLLECTION AND ANALYSIS

Exposure Pathway and/or Sample	Number of Samples and Sample Locations**	Sampling and Collection Frequency	Type and Frequency of Analysis
c. Food Products	One sample of corn and potatoes from any area that is irrigated by water in which liquid radioactive effluent has been discharged.***	At time of harvest	Gamma isotopic analysis of edible portion of each sample
	One sample of broad leaf vegetation from highest D/Q garden and one sample from 10-20 miles	At time of harvest	I-131 analysis of edible portion of each sample

** Sample locations are given on the figure and table in the ODCM.

*** As determined by methods outlined in the ODCM.

Table 4.16.2
(Page 1 of 2)

MAXIMUM VALUES FOR THE LOWER LIMITS OF DETECTION (LLD)[a,e]

Analysis	Water (pCi/l)	Airborne Particulate or Gas (pCi/m^3)	Fish (pCi/kg, wet)	Milk (pCi/l)	Food Products (pCi/kg, wet)	Sediment (pCi/kg, dry)
gross beta	4[b]	1×10^{-2}				
^{3}H	2000(1000[b])					
^{54}Mn	15		130			
^{59}Fe	30		260			
$^{58,60}Co$	15		130			
^{65}Zn	30		260			
^{95}Zr-Nb	15[c]					
^{131}I[d]	1[b]	7×10^{-2}		1	60	
$^{134,137}Cs$	15(10[b]), 18	1×10^{-2}	130	15	60	150
^{140}Ba-La	15[c]			15[c]		

TABLE 4.16.2 (Continued)
(Page 2 of 2)

TABLE NOTATION

a - The LLD is the smallest concentration of radioactive material in a sample that will be detected with 95% probability with 5% probability of falsely concluding that a blank observation represents a "real" signal.

For a particular measurement system (which may include radiochemical separation):

$$LLD = \frac{4.66\ s_b}{E \cdot V \cdot 2.22 \cdot Y \cdot \exp(-\lambda\ \Delta\ t)}$$

where:

LLD is the apriori lower limit of detection as defined above (as picocurie per unit mass or volume),

s_b is the standard deviation of the background counting rate or of the counting rate of a blank sample as appropriate (as counts per minute). Typical values of E, V, Y and Δt shall be used in the calculations.

E is the counting efficiency (as counts per transformation)

V is the sample size (in units of mass or volume)

2.22 is the number of transformations per minute per picocurie

Y is the fraction radiochemical yield (when applicable)

λ is the radioactive decay constant for the particular radionuclide

Δ t is the elapsed time between sample collection (or end the sample collection period) and time of counting

b - LLD for drinking water.

c - Total for parent and daughter

d - These LLDs apply only where "I-131 analysis" is specified.

e - Where "Gamma Isotopic Analysis" is specified, the LLD specifications applies to the following radionuclides: H-3, MN-54, Fe-59, Co-58, Co-60, Zn-65, Zr-Nb-95, Cs-134, Cs-137 and Ba-La-140. Other peaks which are measurable and identifiable, together with the above nuclides shall be identified and reported.

Table 4.16.3

REPORTING LEVELS FOR RADIOACTIVITY CONCENTRATIONS IN ENVIRONMENTAL SAMPLES

Reporting Levels

Analysis	Water (pCi/l)	Airborne Particulate or Gas (pCi/m^3)	Fish (pCi/kg, wet)	Milk (pCi/l)	Vegetables (pCi/kg, wet)
H-3	2×10^4[a]				
Mn-54	1×10^3		3×10^4		
Fe-59	4×10^2		1×10^4		
Co-58	1×10^3		3×10^4		
Co-60	3×10^2		1×10^4		
Zn-65	3×10^2		2×10^4		
Zr-Nb-95	4×10^2[b]				
I-131	2[c]	0.9		3	1×10^2
Cs-134	30	10	1×10^3	60	1×10^3
Cs-137	50	20	2×10^3	70	2×10^3
Ba-La-140	2×10^2[b]			3×10^2[b]	

a - For drinking water samples

b - Total for parent and daughter

c - If no drinking water pathways exist, a value of 20 pCi/l may be used.

Bases 3.16/4.16:

A. Sample Collection & Analysis

The Radiation Environmental Monitoring Program required by this specification provides measurements of radiation and of radioactive materials in those exposure pathways and for those radionuclides which lead to the highest potential radiation exposures of individuals resulting from the plant operation. This program thereby supplements the radiological effluent monitoring by verifying that the measurable concentrations of radioactive materials and levels of radiation are not higher than expected on the basis of the effluent measurements and modeling of the environmental exposure pathways. After a specific program has been in effect for at least three years of operation, program changes may be initiated based on this experience.

The detection capabilities required by Table 4.16.2 are state-of-the-art for routine environmental measurements in industrial laboratories. The LLD's for drinking water meet the requirement of 40 CFR 141.

B. Land Use Census

This specification is provided to ensure that changes in the use of offsite areas are identified and that modifications to the monitoring program are made if required by the results of this census. The best survey information from door-to-door, aerial or consulting with local agricultural authorities shall be used. This census satisfies the requirements of Section IV.B.3 of Appendix I to 10 CFR Part 50. Restricting the census to gardens of greater than 500 square feet provides assurance that significant exposure pathways via leafy vegetables will be identified and monitored since a garden of this size is the minimum required to produce the quantity (26 kg/year) of leafy vegetables assumed in Regulatory Guide 1.109 for consumption by a child. To determine this minimum garden size, the following assumptions were used, 1) that 20% of the garden was used for growing broad leaf vegetation (i.e., similar to lettuce and cabbage), and 2) a vegetation yield of 2 kg/square meter.

C. Interlabotatory Comparison Program

The requirement for participation in an interlabotatory comparison program is provided to ensure that independent checks on the precision and accuracy of the measurements of radioactive material in environmental sample matrices are performed as a part of a quality assurance program for environmental monitoring in order to demonstrate that the results are reasonably valid.

6.5 Plant Operating Procedures

Detailed written procedures, including the applicable check-off lists and instructions, covering areas listed below shall be prepared and followed. These procedures and changes thereto, except as specified in 6.5.G shall be reviewed by the Operations Committee and approved by a member of plant management designated by the plant manager.

A. Plant Operations

1. Integrated and system procedures for normal startup, operation and shutdown of the reactor and all systems and components involving nuclear safety of the facility.

2. Fuel handling operations.

3. Actions to be taken to correct specific and foreseen potential or actual malfunction of systems or components including responses to alarms, primary system leaks and abnormal reactivity changes and including follow-up actions required after plant protective system actions have initiated.

4. Surveillance and testing requirements that could have an effect on nuclear safety.

5. Implementing procedures of the emergency plan, including procedures for coping with emergency conditions involving potential or actual releases of radioactivity.

6. Implementing procedures of the fire protection program.

7. ~~Implementing procedures for the Process Control Program and Offsite Dose Calculation Manual including quality control measures.~~ Quality assurance for effluent and environmental monitoring

8. All programs specified in Specification 6.8.

Drills on the procedures specified in A.8 above shall be conducted as a part of the retraining program. Drills on the procedures specified in A.5 above shall be conducted at least semi-annually, including a check of communications with offsite support groups.

B. (Deleted)

B. Radiological

1.a. A Radiation Protection Program, consistent with the requirements of 10 CFR 20, shall be developed and followed. The Radiation Protection Program shall consist of the following:

(1) A Radiation Protection Plan, which shall be a complete definition of radiation protection policy and program

(2) Procedures which implement the requirements of the Radiation Protection Plan

The Radiation Protection Plan and implementing procedures, with the exception of those non-safety related procedures governing work activities exclusively applicable to or performed by health physics personnel, shall be reviewed by the Operations Committee and approved by a member of plant management designated by the plant manager. Health physics procedures not reviewed by the Operations Committee shall be reviewed and approved by the radiation protection manager.

b. In lieu of the "control device" or "alarm signal" required by paragraph 20.203(c)(2) of 10 CFR 20, each high radiation area in which the intensity of radiation is greater than 100 mrem/hr but less than 1000 mrem/hr shall be barricaded and conspicuously posted as a high radiation area and entrance thereto shall be controlled by requiring issuance of a Radiation Work Permit.[1] Any individual or group of individuals permitted to enter such areas shall be provided with or accompanied by one or more of the following:

(1) A radiation monitoring device that continuously indicates the radiation dose rate in the area.

(2) A radiation monitoring device that continuously integrates the radiation dose rate in the area and alarms when a preset integrated dose is received. Entry into such areas with this monitoring device may be made after the dose rates in the area have been determined and personnel have been made knowledgeable of them.

(3) An individual qualified in radiation protection procedures with a radiation dose rate monitoring device. This individual is responsible for providing positive radiation protection control over the activities within the area and shall perform periodic radiation surveillance at the frequency specified in the radiation protection procedures or the applicable Radiation Work Permit.

c. The above procedure shall also apply to each high radiation area in which the intensity of radiation is greater than 1000 mrem/hr. In addition doors shall be locked or attended, to prevent unauthorized entry into these areas and the keys or key devices for locked doors shall be maintained under the administrative control of the plant manager.

1. Health Physics personnel or personnel escorted by Health Physics personnel shall be exempt from the Radiation Work Permit issuance requirement during the performance of their assigned radiation protection duties, provided they comply with approved radiation protection procedures for entry into high radiation areas. This footnote applies only to high radiation areas of 1000 mrem/hr or less.

2. A program shall be implemented to reduce leakage from systems outside containment that would or could contain highly radioactive fluids during a serious transient or accident to as low as practical levels. This program shall include the following:

   a. Provisions establishing preventive maintenance and periodic visual inspection requirements, and

   b. Integrated leak test requirements for each system at a frequency not to exceed refueling cycle intervals.

   A program acceptable to the Commission was described in a letter dated December 31, 1979, from L O Mayer, NSP, to Director of Nuclear Reactor Regulation, "Lessons Learned Implementation".

3. A program shall be implemented which will ensure the capability to accurately determine the airborne iodine concentration in essential plant areas under accident conditions. This program shall include the following:

   a. Training of personnel,

   b. Procedures for monitoring, and

   c. Provisions for maintenance of sampling and analysis equipment.

   A program acceptable to the Commission was described in a letter dated December 31, 1979, from L O Mayer, NSP, to Director of Nuclear Reactor Regulation, "Lessons Learned Implementation".

4. A program shall be implemented which will ensure the capability to obtain and analyze reactor coolant, radioactive iodines, and particulates in plant gaseous effluents and containment atmosphere samples under accident conditions. The Program shall include:

   a. Training of personnel

   b. Procedures for sampling and analysis

   c. Provisions for maintenance of sampling and analysis equipment

C. Maintenance and Test

The following maintenance and test procedures will be developed to satisfy routine inspection, preventive maintenance programs, and operating license requirements:

1. Routine testing of Engineered Safeguards and equipment as required by the facility license and the Technical Specifications.

2. Routine testing of standby and redundant equipment.

3 Preventive or corrective maintenance of plant equipment and systems that could have an effect on nuclear safety.

4. Calibration and preventive maintenance of instrumentation that could affect the nuclear safety of the plant.

5. Special testing of equipment for proposed changes to operational procedures or proposed system design changes.

D. ~~Process Control Program (PCP)~~ Deleted

~~The PCP shall be approved by the Commission prior to initial implementation. Changes to the PCP shall satisfy the following requirements:~~

1. ~~A description of changes shall be submitted to the Commission with the Semi-Annual Radioactive Effluent Release Report for the period in which the change(s) were made. This submittal shall contain:~~

   a. ~~sufficiently detailed information to totally support the rationale for the change without benefit of additional or supplemental information;~~

   b. ~~a determination that the change did not reduce the overall conformance of the solidified waste product to existing criteria for solid wastes; and~~

   c. ~~documentation of the fact that the change has been reviewed and found acceptable by the Operations Committee.~~

2. Shall become effective upon review and acceptance by the Operations Committee.

Deleted

E. Offsite Dose Calculation Manual (ODCM)

The ODCM shall be approved by the Commission prior to initial implementation. Changes to the ODCM shall satisfy the following requirements:

1. Shall be submitted to the Commission with the Semi-Annual Radioactive Effluent release report for the period in which the change(s) were made effective. This submittal shall contain:

   a. sufficiently detailed information to totally support the rationale for the change without benefit of additional or supplemental information. Information submitted should consist of a package of those pages of the ODCM to be changed with each page numbered and provided with a revision date, together with appropriate analyses or evaluations justifying the change(s).

   b. a determination that the change will not reduce the accuracy or reliability of dose calculations or setpoint determinations; and

   c. documentation of the fact that the change has been reviewed and found acceptable by the Operations Committee.

2. Shall become effective upon review and acceptance by the Operations Committee.

F. Security

Procedures shall be developed to implement the requirements of the Security Plan and the Security Contingency Plan. These implementing procedures, with the exception of those non-safety related procedures governing work activities exclusively applicable to or performed by security personnel, shall be reviewed by the Operations Committee and approved by a member of plant management designated by the plant manager. Security procedures not reviewed by the Operations Committee shall be reviewed and approved by the security manager.

G. Temporary Changes to Procedures

Temporary changes to those procedures which are required to be reviewed by the Operations Committee described in A, ~~B~~, C, ~~D, E~~ and F above, which do not change the intent of the original procedures may be made with the concurrence of two members of the unit management staff, at least one of whom holds a Senior Operator License. Such changes should be documented, reviewed by the Operations Committee and approved by a member of plant management designated by the plant manager within one month. Temporary changes to ~~health physics and~~ security procedures not reviewed by the Operations Committee shall be reviewed by ~~the radiation protection manager for health physics procedures and~~ the security manager for security procedures.

Radiation

6.7.A.2 2. Occupational Exposure Report. ~~(1) An annual report of occupational exposure covering the previous calendar year shall be submitted prior to March 1 of each year~~.

<Insert>

The report should tabulate on an annual basis the number of station, utility and other personnel (including contractors) receiving exposures greater than 100 mrem/yr and their associated man-rem exposure according to work and job functions, e.g., reactor operations and surveillance, inservice inspection, routine maintenance, special maintenance (describe maintenance), waste processing, and refueling. The dose assignment to various duty functions may be estimates based on pocket dosimeter, TLD, or film badge measurements. Small exposures totaling less than 20% of the individual total dose need not to be accounted for. In the aggregate, at least 80% of the total whole body dose received from external sources shall be assigned to specific major work functions.

3. Monthly Operating Report. A monthly report of operating statistics and shutdown experience covering the previous month shall be submitted by the 15th of the following month.

6.7.A.4 4. Semiannual Radioactive Effluent Release Report. Routine radioactive effluent release reports covering the operation of the unit during the previous six months of operation shall be submitted within 60 days after January 1st and July 1st of each year.

<Insert>

The radioactive effluent release reports shall include a summary of the quantities of radioactive liquid and gaseous effluents as outlined in Appendix B of Regulatory Guide 1.21, Revision 1, June, 1974, with data summarized on a quarterly basis.

The report to be submitted 60 days after January 1st of each year shall include an assessment of the radiation doses from radioactive effluents released from the plant during the previous calendar year. This same report shall also include an assessment of the radiation doses from radioactive liquid and gaseous effluents to individuals due to their activities inside the site boundary (Figures 3.8.1 and 3.8.2) during the report period. All assumptions used in making these assessments (i.e., specific activity, exposure time and location) shall be included in these reports. The assessment of radiation doses shall be performed in accordance with the Offsite Dose Calculation Manual (ODCM) or standard NRC computer codes.

~~1. This report supplements the requirements of 10 CFR 20, Section 20.407. If 10 CFR 20, Section 20.407 is revised to include such information, this Specification is unnecessary.~~

TSTF-152

INSERT for 6.7.A.2

A tabulation on an annual basis of the number of station, utility, and other personnel (including contractors), for whom monitoring was performed, receiving an annual deep dose equivalent > 100 mrems and the associated collective deep dose equivalent (reported in person - rem) according to work and job functions (e.g., reactor operations and surveillance, inservice inspection, routine maintenance, special maintenance ~~[describe maintenance]~~, waste processing, and refueling). This tabulation supplements the requirements of 10 CFR 20.2206. The dose assignments to various duty functions may be estimated based on pocket ionization chamber, thermoluminescence dosimeter (TLD), electronic dosimeter, or film badge measurements. Small exposures totaling < 20 percent of the individual total dose need not be accounted for. In the aggregate, at least 80 percent of the total deep dose equivalent received from external sources should be assigned to specific major work functions. The report covering the previous calendar year shall be submitted by April 30 of each year. ~~[The initial report shall be submitted by April 30 of the year following the initial criticality.]~~

Insert for 6.7.A.4

TSTF-152

5.6 Reporting Requirements

~~5.6.2~~ Annual Radiological Environmental Operating Report (continued)

(ODCM), and in 10 CFR 50, Appendix I, Sections IV.B.2, IV.B.3, and IV.C:

The Annual Radiological Environmental Operating Report shall include the results of analyses of all radiological environmental samples and of all environmental radiation measurements taken during the period pursuant to the locations specified in the table and figures in the ODCM, as well as summarized and tabulated results of these analyses and measurements [in the format of the table in the Radiological Assessment Branch Technical Position, Revision 1, November 1979]. [The report shall identify the TLD results that represent collocated dosimeters in relation to the NRC TLD program and the exposure period associated with each result.] In the event that some individual results are not available for inclusion with the report, the report shall be submitted noting and explaining the reasons for the missing results. The missing data shall be submitted in a supplementary report as soon as possible.

6.7.A.4 ~~5.6.3~~ Radioactive Effluent Release Report

~~NOTE~~

~~A single submittal may be made for a multiple unit station. The submittal should combine sections common to all units at the station; however, for units with separate radwaste systems, the submittal shall specify the releases of radioactive material from each unit.~~

The Radioactive Effluent Release Report covering the operation of the unit shall be submitted in accordance with 10 CFR 50.36a. The report shall include a summary of the quantities of radioactive liquid and gaseous effluents and solid waste released from the unit. The material provided shall be consistent with the objectives outlined in the ODCM ~~and Process Control Program~~ and in conformance with 10 CFR 50.36a and 10 CFR Part 50, Appendix I, Section IV.B.1.

during the previous year

prior to 15 May ~~1st~~ of each year

~~5.6.4~~ Monthly Operating Reports

Routine reports of operating statistics and shutdown experience[, including documentation of all challenges to the safety/relief

(continued)

The radioactive effluent release report to be submitted 60 days after January 1 of each year shall also include an assessment of radiation doses to the likely most exposed member of the general public from reactor releases and other nearby uranium fuel cycle sources (including doses from primary effluent pathways and direct radiation) for the previous 12 consecutive months to show conformance with 40 CFR 190, Environmental Radiation Protection Standards for Nuclear Power Operation.

The radioactive effluent release reports shall include the following information for solid waste shipped offsite during the report period.

a. container volume,

b. total curie quantity (specify whether determined by measurement or estimate).

c. principal radionuclides (specify whether determined by measurement or estimate),

d. type of waste (e.g., spent resin, compacted dry waste, evaporator bottoms),

e. type of container (e.g., LSA, Type A, Type B, Large Quantity), and

f. solidification agent (e.g., cement, urea formaldehyde).

The radioactive effluent release reports shall include unplanned releases from the site of radioactive materials in gaseous and liquid effluents on a quarterly basis, changes to the ODCM, a description of changes to the PCP, a report of when milk or vegetable samples can not be obtained as required by Table 4.16.1, and changes in land use resulting in significant increases in calculated doses.

5. ~~Annual Summaries of Meteorological Data~~ Deleted

~~An annual summary of meteorological data shall be submitted for the previous calendar year in the form of joint frequency distributions of wind speed, wind direction, and atmospheric stability at the request of the Commission.~~

6. Report of Safety/Relief Valve Failures and Challenges. An annual report of safety/relief valve failures and challenges shall be submitted prior to March 1st of each year.

Radiological

Operating

C. Environmental Reports

1. Annual ~~Radiation~~ Environmental ~~Monitoring~~ Report

<Insert>

a. Annual Radiation Environmental Monitoring Reports covering the operation of the program during the previous calendar year shall be submitted prior to May 1 of each year.

b. The Annual Radiation Environmental Monitoring Reports shall include summaries, interpretations, and an analysis of trends of the results of the radiological environmental surveillance activities for the report period, including a comparison with preoperational studies, operational controls (as appropriate), and previous environmental surveillance reports and an assessment of the observed impacts of the plant operation on the environment. The reports shall also include the results of land use census required by Specification 4.16.B.1. If harmful effects or evidence of irreversible damage are detected by the monitoring, the report shall provide an analysis of the problem and a planned course of action to alleviate the problem.

c. The Annual Radiation Environmental Monitoring Reports shall include summarized and tabulated results in the format of Regulatory Guide 4.8, December 1975 of all radiological environmental samples taken during the report period. In the event that some results are not available for inclusion with the report, the report shall be submitted noting and explaining the reasons for the missing results. The missing data shall be submitted as soon as possible in the supplementary report.

d. The reports shall also include the following: a summary description of the radiological environmental monitoring program; a map of all sampling locations keyed to a table giving distances and directions from the plant site; and the results of licensee participation in the Interlaboratory Comparison Program, required by Specification 4.16.C.1.

5.0 ADMINISTRATIVE CONTROLS

5.6 Reporting Requirements

The following reports shall be submitted in accordance with 10 CFR 50.4.

5.6.1 Occupational Radiation Exposure Report

NOTE

A single submittal may be made for a multiple unit station. The submittal should combine sections common to all units at the station.

A tabulation on an annual basis of the number of station, utility, and other personnel (including contractors) receiving exposures > 100 mrem/yr and their associated man rem exposure according to work and job functions (e.g., reactor operations and surveillance, inservice inspection, routine maintenance, special maintenance [describe maintenance], waste processing, and refueling). This tabulation supplements the requirements of 10 CFR 20.2206. The dose assignments to various duty functions may be estimated based on pocket dosimeter, thermoluminescent dosimeter (TLD), or film badge measurements. Small exposures totalling < 20% of the individual total dose need not be accounted for. In the aggregate, at least 80% of the total whole body dose received from external sources should be assigned to specific major work functions. The report shall be submitted by April 30 of each year. [The initial report shall be submitted by April 30 of the year following initial criticality.]

5.6.2 Annual Radiological Environmental Operating Report

NOTE

A single submittal may be made for a multiple unit station. The submittal should combine sections common to all units at the station.

(site)

<(Insert for 6.7.C.1)>

The Annual Radiological Environmental Operating Report covering the operation of the ~~unit~~ during the previous calendar year shall be submitted by May 15 of each year. The report shall include summaries, interpretations, and analyses of trends of the results of the Radiological Environmental Monitoring Program for the reporting period. The material provided shall be consistent with the objectives outlined in the Offsite Dose Calculation Manual

(continued)

5.6 Reporting Requirements

5.6.2 Annual Radiological Environmental Operating Report (continued)

(ODCM), and in 10 CFR 50, Appendix I, Sections IV.B.2, IV.B.3, and IV.C.

(Insert for 6.7.c.1 cont.)

The Annual Radiological Environmental Operating Report shall include the results of analyses of all radiological environmental samples and of all environmental radiation measurements taken during the period pursuant to the locations specified in the table and figures in the ODCM, as well as summarized and tabulated results of these analyses and measurements [in the format of the table in the Radiological Assessment Branch Technical Position, Revision 1, November 1979]. [The report shall identify the TLD results that represent collocated dosimeters in relation to the NRC TLD program and the exposure period associated with each result.] In the event that some individual results are not available for inclusion with the report, the report shall be submitted noting and explaining the reasons for the missing results. The missing data shall be submitted in a supplementary report as soon as possible.

5.6.3 Radioactive Effluent Release Report

NOTE

A single submittal may be made for a multiple unit station. The submittal should combine sections common to all units at the station; however, for units with separate radwaste systems, the submittal shall specify the releases of radioactive material from each unit.

The Radioactive Effluent Release Report covering the operation of the unit shall be submitted in accordance with 10 CFR 50.36a. The report shall include a summary of the quantities of radioactive liquid and gaseous effluents and solid waste released from the unit. The material provided shall be consistent with the objectives outlined in the ODCM and Process Control Program and in conformance with 10 CFR 50.36a and 10 CFR 50, Appendix I, Section IV.B.1.

5.6.4 Monthly Operating Reports

Routine reports of operating statistics and shutdown experience[, including documentation of all challenges to the safety/relief

(continued)

2. ~~Environmental Special Reports~~ Deleted

When radioactivity levels in samples exceed limits specified in Table 4.16.3 an Environmental Special Report shall be submitted within ~~30 days from~~ the end of the affected calendar quarter. ~~For~~ certain cases involving long analysis time, determination of quarterly averages may extend ~~beyond the 30 day period.~~ In these cases the potential for exceeding the quarterly limits will be reported within the ~~30 day~~ period to be followed by the Environmental ~~Special Re~~port as soon as practicable.

3. Other Environmental Reports (non-radiological, non-aquatic)

a. Environmental events that indicate or could result in a significant environmental impact causally related to plant operation. The following are examples: excessive bird impaction; onsite plant or animal disease outbreaks; unusual mortality of any species protected by Endangered Species Act of 1973; increase in nuisance organisms or conditions; or excessive environmental impact caused by herbicide application to transmission corridors associated with the plant. This report shall be submitted within 30 days of the event and shall (a) describe, analyze, and evaluate the event, including extent and magnitude of the impact and plant operating characteristics, (b) describe the probable cause of the event, (c) indicate the action taken to correct the reported event, (d) indicate the corrective action taken to preclude repetition of the event and to prevent similar occurrences involving similar components or systems, and (e) indicate the agencies notified and their preliminary responses.

b. Proposed changes, tests or experiments which may result in a significant increase in any adverse environmental impact which was not previously reviewed or evaluated in the Final Environmental Statement or supplements thereto. This report shall include an evaluation of the environmental impact of the proposed activity and shall be submitted 30 days prior to implementing the proposed change, test or experiment.

D. Special Reports

Unless otherwise indicated, special reports required by the Technical Specification shall be submitted within the time period specified for each report.

~~6.0 5.0 ADMINISTRATIVE CONTROLS~~

6.8 ~~5.5~~ Programs and Manuals

CTS II

1.0.AL

The following programs shall be established, implemented and maintained.

6.8.A ~~5.5.1~~ Offsite Dose Calculation Manual (ODCM)

1 ~~a.~~ The ODCM shall contain the methodology and parameters used in the calculation of offsite doses resulting from radioactive gaseous and liquid effluents, in the calculation of gaseous and liquid effluent monitoring alarm and trip setpoints, and in the conduct of the radiological environmental monitoring program; and

2 ~~b.~~ The ODCM shall also contain the radioactive effluent controls and radiological environmental monitoring activities and descriptions of the information that should be included in the Annual Radiological Environmental Operating, and Radioactive Effluent Release reports required by Specification ~~[5.6.2]~~ 6.7.C.1 and Specification ~~[5.6.3]~~ 6.7.A.4.

3 Licensee initiated changes to the ODCM:

a. Shall be documented and records of reviews performed shall be retained. This documentation shall contain:

1. sufficient information to support the change(s) together with the appropriate analyses or evaluations justifying the change(s), and

2. a determination that the change(s) maintain the levels of radioactive effluent control required by 10 CFR 20.1302, 40 CFR 190, 10 CFR 50.36a, and 10 CFR 50, Appendix I, and not adversely impact the accuracy or reliability of effluent, dose, or setpoint calculations;

b. Shall become effective after ~~review and acceptance by the [onsite review function] and~~ the approval of the ~~[Plant Superintendent]~~ plant manager; and

c. Shall be submitted to the NRC in the form of a complete, legible copy of the entire ODCM as a part of or concurrent with the Radioactive Effluent Release Report for the period of the report in which any change in the ODCM was made. Each change shall be identified by markings in the margin of the affected pages, clearly indicating the area of the page

(continued)

5.5 Programs and Manuals

5.5.1 Offsite Dose Calculation Manual (ODCM) (continued)

that was changed, and shall indicate the date (i.e., month and year) the change was implemented.

Combustible Gas Control

6.8.3 ~~5.5.2~~ Primary Coolant Sources Outside Containment

This program provides controls to minimize leakage from those portions of systems outside containment that could contain highly radioactive fluids during a serious transient or accident to levels as low as practicable. The systems include [~~the Low Pressure~~ Core Spray, High Pressure Coolant Injection, Residual Heat Removal, Reactor Core Isolation Cooling, ~~hydrogen recombiner~~, process sampling, and Standby Gas Treatment]. The program shall include the following:

1 ~~a.~~ Preventive maintenance and periodic visual inspection requirements; and

2 ~~b.~~ Integrated leak test requirements for each system at ~~refueling cycle intervals or less.~~

The provisions of Specification 4.0.3 are applicable. A program acceptable to the Commission was described in a letter dated December 31, 1979, from L O Mayer, NSP, to Director of Nuclear Reactor Regulation, "Lessons Learned Implementation"

6.8.4 ~~5.5.3~~ Post Accident Sampling

This program provides controls that ensure the capability to obtain and analyze reactor coolant, radioactive gases, and particulates in plant gaseous effluents and containment atmosphere samples under accident conditions. The program shall include the following:

1 ~~a.~~ Training of personnel;

2 ~~b.~~ Procedures for sampling and analysis; and

3 ~~c.~~ Provisions for maintenance of sampling and analysis equipment.

6.8.5 ~~5.5.4~~ Radioactive Effluent Controls Program

This program conforms to 10 CFR 50.36a for the control of radioactive effluents and for maintaining the doses to members of the public from radioactive effluents as low as reasonably

(continued)

TSTF-258 Rev 4

5.5 Programs and Manuals

~~5.5.4~~ 6.8.D Radioactive Effluent Controls Program (continued)

achievable. The program shall be contained in the ODCM, shall be implemented by procedures, and shall include remedial actions to be taken whenever the program limits are exceeded. The program shall include the following elements:

1 ~~a.~~ Limitations on the functional capability of radioactive liquid and gaseous monitoring instrumentation including surveillance tests and setpoint determination in accordance with the methodology in the ODCM;

2 ~~b.~~ Limitations on the concentrations of radioactive material released in liquid effluents to unrestricted areas, conforming to ~~10 CFR 20, Appendix B, Table 2, Column 2~~; Insert C

3 ~~c.~~ Monitoring, sampling, and analysis of radioactive liquid and gaseous effluents in accordance with 10 CFR 20.1302 and with the methodology and parameters in the ODCM;

4 ~~d.~~ Limitations on the annual and quarterly doses or dose commitment to a member of the public from radioactive materials in liquid effluents released from ~~each unit~~ the site to unrestricted areas, conforming to 10 CFR 50, Appendix I;

5 ~~e.~~ Determination of cumulative and projected dose contributions from radioactive effluents for the current calendar quarter and current calendar year in accordance with the methodology and parameters in the ODCM at least every ~~31 days~~ monthly;

6 ~~f.~~ Limitations on the functional capability and use of the liquid and gaseous effluent treatment systems to ensure that appropriate portions of these systems are used to reduce releases of radioactivity when the projected doses in a period of 31 days would exceed 2% of the guidelines for the annual dose or dose commitment, conforming to 10 CFR 50, Appendix I;

7 ~~g.~~ Limitations on the dose rate resulting from radioactive material released in gaseous effluents from the site to areas at or beyond the site boundary ~~conforming to the dose associated with 10 CFR 20, Appendix B, Table 2, Column 1~~; Insert D

(continued)

INSERT A

The controls shall include guidelines on working hours that ensure adequate shift coverage shall be maintained without routine heavy use of overtime.

INSERT B

5.3.2 For the purpose of 10 CFR 55.4, a licensed Senior Reactor Operator (SRO) and a licensed reactor operator (RO) are those individuals who, in addition to meeting the requirements of TS 5.3.1, perform the functions described in 10 CFR 50.54(m).

INSERT C

to ten times the concentration values in Appendix B, Table 2, Column 2 to 10 CFR 20.1001-20.2402.

INSERT D

shall be in accordance with the following:

1. For noble gases: a dose rate ≤ 500 mrem/yr to the whole body and a dose rate ≤ 3000 mrem/yr to the skin, and

2. For iodine-131, iodine-133, tritium, and all radionuclides in particulate form with half-lives greater than 8 days: a dose rate ≤ 1500 mrem/yr to any organ;

INSERT E

The provisions of specifications 4.0.B, 4.0.D and 4.0.E ~~SR 3.0.2 and SR 3.0.3~~ are applicable to the Radioactive Effluent Controls Program surveillance frequency.

INSERT G

Controls shall be included in the procedures to require a periodic independent review be conducted to ensure that excessive hours have not been assigned.

TSTF-258 Rev 4

5.5 Programs and Manuals

5.5.4 Radioactive Effluent Controls Program (continued)

8 h. Limitations on the annual and quarterly air doses resulting from noble gases released in gaseous effluents from ~~each unit~~ to areas beyond the site boundary, conforming to 10 CFR 50, Appendix I;

9 i. Limitations on the annual and quarterly doses to a member of the public from iodine-131, iodine-133, tritium, and all radionuclides in particulate form with half lives > 8 days in gaseous effluents released from ~~each unit~~ to areas beyond the site boundary, conforming to 10 CFR 50, Appendix I;

10 j. Limitations on the annual dose or dose commitment to any member of the public due to releases of radioactivity and to radiation from uranium fuel cycle sources, conforming to 40 CFR 190; and

11 k. Limitations on venting and purging of the ~~Mark II~~ containment through the Standby Gas Treatment System to maintain releases as low as reasonably achievable. ~~(in BWR/4s with Mark II containments).~~

Insert E

5.5.5 Component Cyclic or Transient Limit

This program provides controls to track the FSAR Section [ ], cyclic and transient occurrences to ensure that components are maintained within the design limits.

5.5.6 Pre-Stressed Concrete Containment Tendon Surveillance Program

This program provides controls for monitoring any tendon degradation in pre-stressed concrete containments, including effectiveness of its corrosion protection medium, to ensure containment structural integrity. The program shall include baseline measurements prior to initial operations. The Tendon Surveillance Program, inspection frequencies, and acceptance criteria shall be in accordance with [Regulatory Guide 1.35, Revision 3, 1989].

The provisions of SR 3.0.2 and SR 3.0.3 are applicable to the Tendon Surveillance Program inspection frequencies.

(continued)

5.5 Programs and Manuals

5.5.8 Ventilation Filter Testing Program (VFTP) (continued)

[Reviewer's Note: Allowable penetration = [100% - methyl iodide efficiency for charcoal credited in staff safety evaluation]/ (safety factor).

Safety factor = [5] for systems with heaters.
= [7] for systems without heaters.]

d. Demonstrate for each of the ESF systems that the pressure drop across the combined HEPA filters, the prefilters, and the charcoal adsorbers is less than the value specified below when tested in accordance with [Regulatory Guide 1.52, Revision 2, and ASME N510-1989] at the system flowrate specified as follows [± 10%]:

ESF Ventilation System	Delta P	Flowrate
[ ]	[ ]	[ ]

[e. Demonstrate that the heaters for each of the ESF system dissipate the value specified below [± 10%] when tested in accordance with [ASME N510-1989]:

ESF Ventilation System	Wattage
[ ]	[ ]
]

The provisions of SR 3.0.2 and SR 3.0.3 are applicable to the VFTP test frequencies.

6.8.E through 6.8.H Reserved

~~5.5.9~~ 6.8.I Explosive Gas and Storage Tank Radioactivity Monitoring Program

This program provides controls for potentially explosive gas mixtures contained in the Offgas Treatment System ~~[Waste Gas Holdup System]~~, ~~[~~the quantity of radioactivity contained in gas storage tanks or fed into the offgas treatment system, and the quantity of radioactivity contained in unprotected outdoor liquid storage tanks~~]~~. ~~The~~

(continued)

5.5 Programs and Manuals

~~5.5.9 Explosive Gas and Storage Tank Radioactivity Monitoring Program (continued)~~

<Insert>

gaseous radioactivity quantities shall be determined following the methodology in [Branch Technical Position (BTP) ETSB 11-5, "Postulated Radioactive Release due to Waste Gas System Leak or Failure"]. The liquid radwaste quantities shall be determined in accordance with [Standard Review Plan, Section 15.7.3, "Postulated Radioactive Release due to Tank Failures"].

The program shall ~~include~~:

1. ~~a.~~ The limits ~~for~~ concentrations of hydrogen and oxygen in the Offgas Treatment System ~~[Waste Gas Holdup System]~~ and a surveillance program to ensure the limits are maintained. Such limits shall be appropriate to the system's design criteria (i.e., whether or not the system is designed to withstand a hydrogen explosion);

2. ~~b.~~ A surveillance program to ensure that the quantity of radioactivity contained in ~~[~~each gas storage tank and fed into the offgas treatment system~~]~~ is less than the amount that would result in a whole body exposure of ≥ 0.5 rem to any individual in an unrestricted area, in the event of ~~[~~an uncontrolled release of the tanks' contents~~]~~; and

3. ~~c.~~ A surveillance program to ensure that the quantity of radioactivity contained in all outdoor liquid radwaste tanks that are not surrounded by liners, dikes, or walls, capable of holding the tanks' contents and that do not have tank overflows and surrounding area drains connected to the ~~[~~Liquid Radwaste Treatment System~~]~~ is less than the amount that would result in concentrations less than the limits of 10 CFR 20, Appendix B, Table 2, Column 2, at the nearest potable water supply and the nearest surface water supply in an unrestricted area, in the event of an uncontrolled release of the tanks' contents.

The provisions of Specifications 4.0.3, 4.0.4 and 4.0.E ~~SR 3.0.2 and SR 3.0.3~~ are applicable to the Explosive Gas and Storage Tank Radioactivity Monitoring Program surveillance frequencies.

6.8.I Reserved

(continued)

Insert for Specification 6.8.I

The quantity of radioactivity after 12 hours holdup contained in each gas storage tank shall be limited to ≤ 22,000 curies of noble gases (considered as dose equivalent Xe-133). The quantity of liquid radioactive material contained in each outside temporary tank shall be limited to ≤ 10 curies, excluding tritium and dissolved or entrained noble gases.

~~6.8 PROGRAMS~~

K. ~~A.~~ Technical Specifications (TS) Bases Control Program

This program provides a means for processing changes to the Bases of these Technical Specifications.

1. Changes to the Bases of the TS shall be made under appropriate administrative controls and reviews.

2. Changes to Bases may be made without prior NRC approval provided the changes do not involve either of the following:

   a. a change in the TS incorporated in the license; or

   b. a change to the USAR or Bases that requires NRC approval pursuant to 10 CFR 50.59.

3. The Bases Control Program shall contain provisions to ensure that the Bases are maintained consistent with the USAR.

4. Proposed changes to the Bases that involve changes as described in a. or b. of Specification 6.8.~~A~~K.2 above shall be reviewed and approved by the NRC prior to implementation. Changes to the Bases implemented without prior NRC approval shall be provided to the NRC on a frequency consistent with 10 CFR 50.71(e).

~~INSERT F~~

6.
~~5.0 ADMINISTRATIVE CONTROLS~~

6.9
~~5.7~~ High Radiation Area

As provided in paragraph 20.1601(c) of 10 CFR Part 20, the following controls shall be applied to high radiation areas in place of the controls required by paragraph 20.1601(a) and (b) of 10 CFR Part 20:

~~5.7.1~~ 6.9.A High Radiation Areas with Dose Rates Not Exceeding 1.0 rem/hour at 30 Centimeters from the Radiation Source or from any Surface Penetrated by the Radiation

1 ~~a.~~ Each entryway to such an area shall be barricaded and conspicuously posted as a high radiation area. Such barricades may be opened as necessary to permit entry or exit of personnel or equipment.

2 ~~b.~~ Access to, and activities in, each such area shall be controlled by means of Radiation Work Permit (RWP) or equivalent that includes specification of radiation dose rates in the immediate work area(s) and other appropriate radiation protection equipment and measures.

3 ~~c.~~ Individuals qualified in radiation protection procedures and personnel continuously escorted by such individuals may be exempted from the requirement for an RWP or equivalent while performing their assigned duties provided that they are otherwise following plant radiation protection procedures for entry to, exit from, and work in such areas.

4 ~~d.~~ Each individual or group entering such an area shall possess:

a ~~1.~~ A radiation monitoring device that continuously displays radiation dose rates in the area; or

b ~~2.~~ A radiation monitoring device that continuously integrates the radiation dose rates in the area and alarms when the device's dose alarm setpoint is reached, with an appropriate alarm setpoint, or

c ~~3.~~ A radiation monitoring device that continuously transmits dose rate and cumulative dose information to a remote receiver monitored by radiation protection personnel responsible for controlling personnel radiation exposure within the area, or

(continued)

INSERT F

5.7 High Radiation Area

5.7.1 High Radiation Areas with Dose Rates Not Exceeding 1.0 rem/hour at 30 Centimeters from the Radiation Source or from any Surface Penetrated by the Radiation (continued)

d 4. A self-reading dosimeter (e.g., pocket ionization chamber or electronic dosimeter) and,

(i) Be under the surveillance, as specified in the RWP or equivalent, while in the area, of an individual qualified in radiation protection procedures, equipped with a radiation monitoring device that continuously displays radiation dose rates in the area; who is responsible for controlling personnel exposure within the area, or

(ii) Be under the surveillance as specified in the RWP or equivalent, while in the area, by means of closed circuit television, of personnel qualified in radiation protection procedures, responsible for controlling personnel radiation exposure in the area, and with the means to communicate with individuals in the area who are covered by such surveillance.

5 e. Except for individuals qualified in radiation protection procedures, or personnel continuously escorted by such individuals, entry into such areas shall be made only after dose rates in the area have been determined and entry personnel are knowledgeable of them. These continuously escorted personnel will receive a pre-job briefing prior to entry into such areas. This dose rate determination, knowledge, and pre-job briefing does not require documentation prior to initial entry.

INSERT F

5.7 High Radiation Area

~~5.7.2~~ 6.9.B High Radiation Areas with Dose Rates Greater than 1.0 rem/hour at 30 Centimeters from the Radiation Source or from any Surface Penetrated by the Radiation, but less than 500 rads/hour at 1 Meter from the Radiation Source or from any Surface Penetrated by the Radiation

1 ~~a.~~ Each entryway to such an area shall be conspicuously posted as a high radiation area and shall be provided with a locked or continuously guarded door or gate that prevents unauthorized entry, and, in addition:

a ~~1.~~ All such door and gate keys shall be maintained under the administrative control of the shift supervisor, radiation protection manager, or his or her designee.

b ~~2.~~ Doors and gates shall remain locked except during periods of personnel or equipment entry or exit.

2 ~~b.~~ Access to, and activities in, each such area shall be controlled by means of an RWP or equivalent that includes specification of radiation dose rates in the immediate work area(s) and other appropriate radiation protection equipment and measures.

3 ~~c.~~ Individuals qualified in radiation protection procedures may be exempted from the requirement for an RWP or equivalent while performing radiation surveys in such areas provided that they are otherwise following plant radiation protection procedures for entry to, exit from, and work in such areas.

4 ~~d.~~ Each individual or group entering such an area shall possess:

a ~~1.~~ A radiation monitoring device that continuously integrates the radiation rates in the area and alarms when the device's dose alarm setpoint is reached, with an appropriate alarm setpoint, or

(continued)

INSERT F

5.7 High Radiation Area

5.7.2 High Radiation Areas with Dose Rates Greater than 1.0 rem/hour at 30 Centimeters from the Radiation Source or from any Surface Penetrated by the Radiation, but less than 500 rads/hour at 1 Meter from the Radiation Source or from any Surface Penetrated by the Radiation (continued)

b ~~2.~~ A radiation monitoring device that continuously transmits dose rate and cumulative dose information to a remote receiver monitored by radiation protection personnel responsible for controlling personnel radiation exposure within the area with the means to communicate with and control every individual in the area, or

c ~~3.~~ A self-reading dosimeter (e.g., pocket ionization chamber or electronic dosimeter) and,

(i) Be under the surveillance, as specified in the RWP or equivalent, while in the area, of an individual qualified in radiation protection procedures, equipped with a radiation monitoring device that continuously displays radiation dose rates in the area; who is responsible for controlling personnel exposure within the area, or

(ii) Be under the surveillance as specified in the RWP or equivalent, while in the area, by means of closed circuit television, of personnel qualified in radiation protection procedures, responsible for controlling personnel radiation exposure in the area, and with the means to communicate with and control every individual in the area.

d ~~4.~~ In those cases where options (~~2~~ b) and (~~3~~ c), above, are impractical or determined to be inconsistent with the "As Low As is Reasonably Achievable" principle, a radiation monitoring device that continuously displays radiation dose rates in the area.

5 ~~4.~~ Except for individuals qualified in radiation protection procedures, or personnel continuously escorted by such individuals, entry into such areas shall be made only after dose rates in the area have been determined and entry personnel are knowledgeable of them. . These continuously escorted personnel will receive a pre-job briefing prior to entry into such areas. This dose rate determination, knowledge, and pre-job briefing does not require documentation prior to initial entry.

~~(continued)~~

INSERT F

5.7 High Radiation Area

5.7.2 High Radiation Areas with Dose Rates Greater than 1.0 rem/hour at 30 Centimeters from the Radiation Source or from any Surface Penetrated by the Radiation, but less than 500 rads/hour at 1 Meter from the Radiation Source or from any Surface Penetrated by the Radiation (continued)

6 f. Such individual areas that are within a larger area where no enclosure exists for the purpose of locking and where no enclosure can reasonably be constructed around the individual area need not be controlled by a locked door or gate, nor continuously guarded, but shall be barricaded, conspicuously posted, and a clearly visible flashing light shall be activated at the area as a warning device.

Exhibit C

License Amendment Request
Radiological Effluent Technical Specifications Conformance
To Standard Technical Specifications and Generic Letter 89-01

Revised Monticello Technical Specification Pages

This exhibit consists of revised Technical Specification pages that incorporate the proposed change. The pages included in this exhibit are as listed below:

Pages
ii – vii
192 – 196
218
229g
244 – 247
249 – 262

TABLE OF CONTENTS (Cont'd)

		Page
3.4 and 4.4	Standby Liquid Control System	93
	A. System Operation	93
	B. Boron Solution Requirements	95
	C.	96
	3.4 and 4.4 Bases	99
3.5 and 4.5	Core and Containment/Spray Cooling Systems	101
	A. ECCS Systems	101
	B. RHR Intertie Return Line Isolation Valves	103
	C. Containment Spray/Cooling System	104
	D. RCIC	105
	E. Cold Shutdown and Refueling Requirements	106
	F. Recirculation System	107
	3.5 and 4.5 Bases	110
3.6 and 4.6	Primary System Boundary	121
	A. Reactor Coolant Heatup and Cooldown	121
	B. Reactor Vessel Temperature and Pressure	122
	C. Coolant Chemistry	123
	D. Coolant Leakage	126
	E. Safety/Relief Valves	127
	F. Deleted	
	G. Jet Pumps	128
	H. Snubbers	129
	3.6 and 4.6 Bases	145
3.7 and 4.7	Containment Systems	156
	A. Primary Containment	156
	B. Standby Gas Treatment System	166
	C. Secondary Containment	169
	D. Primary Containment Isolation Valves	170
	E. Combustible Gas Control System	172
	3.7 Bases	175
	4.7 Bases	183
3.8 and 4.8	Main Condenser Offgas	192
	A. Main Condenser Offgas Activity	192
	3.8 and 4.8 Bases	196

TABLE OF CONTENTS (Cont'd)

		Page
3.9 and 4.9	Auxiliary Electrical Systems	199
	A. Operational Requirements for Startup	199
	B. Operational Requirements for Continued Operation	200
	1. Transmission Lines	200
	2. Reserve Transformers	201
	3. Standby Diesel Generators	201
	4. Station Battery System	203
	5. 24V Battery Systems	203
	3.9 Bases	204
	4.9 Bases	205
3.10 and 4.10	Refueling	206
	A. Refueling Interlocks	206
	B. Core Monitoring	207
	C. Fuel Storage Pool Water Level	207
	D. Movement of Fuel	207
	E. Extended Core and Control Rod Drive Maintenance	208
	3.10 and 4.10 Bases	209
3.11 and 4.11	Reactor Fuel Assemblies	211
	A. Average Planar Linear Heat Generation Rate	211
	B. Linear Heat Generation Rate	212
	C. Minimum Critical Power Ratio	213
	3.11 Bases	216
	4.11 Bases	218
3.12 and 4.12	(Deleted)	
3.13 and 4.13	Fire Detection Protection Systems	223
	A. Fire Detection Instrumentation	223
	B. Fire Suppression Water System	224
	C. Hose Stations	226
	D. Yard Hydrant Hose Houses	227
	E. Sprinkler Systems	227a
	F. Halon Systems	227b
	G. Penetration Fire Barriers	227b
	H. Alternate Shutdown System	227c
	3.13 Bases	228
	4.13 Bases	228b

TABLE OF CONTENTS (Cont'd)

		Page
3.14 and 4.14	Accident Monitoring Instrumentation	229a
	3.14 and 4.14 Bases	229e
3.15 and 4.15	Inservice Inspection and Testing	229f
	3.15 and 4.15 Bases	229g
3.16 and 4.16	(Deleted)	
3.17 and 4.17	Control Room Habitability	229u
	A. Control Room Ventilation System	229u
	B. Control Room Emergency Filtration System	229v
	3.17 Bases	229y
	4.17 Bases	229z
3.18 and 4.18	Emergency Service Water System	229za
	A. Emergency Filtration Train ESW (EFT-ESW)	229za
	3.18 Bases	229zc
	4.18 Bases	229zf
5.0 DESIGN FEATURES		230
	5.1 Site	230
	5.2 Reactor	230
	5.3 Reactor Vessel	230
	5.4 Containment	230
	5.5 Fuel Storage	231
	5.6 Seismic Designs	231
6.0 ADMINISTRATIVE CONTROLS		232
	6.1 Organization	232
	6.2 (Deleted)	243
	6.3 (Deleted)	243
	6.4 Action to be taken if a Safety Limit is Exceeded	243
	6.5 Plant Operating Procedures	244
	6.6 Plant Operating Records	246
	6.7 Reporting Requirements	248
	6.8 Programs and Manuals	253
	6.9 High Radiation Area	259

LIST OF FIGURES

Figure No.		Page
3.4.1	Sodium Pentaborate Solution Volume-Concentration Requirements	97
3.4.2	Sodium Pentaborate Solution Temperature Requirements	98
3.6.1	Core Beltline Operating Limits Curve Adjustment vs. Fluence	133
3.6.2	Minimum Temperature vs. Pressure for Pressure Tests	134
3.6.3	Minimum Temperature vs. Pressure for Mechanical Heatup or Cooldown Without the Core Critical	135
3.6.4	Minimum Temperature vs. Pressure for Critical Core Operation	136
4.6.2	Chloride Stress Corrosion Test Results @ 500°F	137
3.7.1	Differential Pressure Decay Between the Drywell and Wetwell	191

LIST OF TABLES

Table No.		Page
3.1.1	Reactor Protection System (Scram) Instrument Requirements	28
4.1.1	Scram Instrument Functional Tests - Minimum Functional Test Frequencies for Safety Instrumentation and Control Circuits	32
4.1.2	Scram Instrument Calibration - Minimum Calibration Frequencies for Reactor Protection Instrument Channels	34
3.2.1	Instrumentation that Initiates Primary Containment Isolation Functions	49
3.2.2	Instrumentation that Initiates Emergency Core Cooling Systems	52
3.2.3	Instrumentation that Initiates Rod Block	56
3.2.4	Instrumentation that Initiates Reactor Building Ventilation Isolation and Standby Gas Treatment System Initiation	59
3.2.5	Instrumentation That Initiates a Recirculation Pump Trip and Alternate Rod Injection	60
3.2.6	Instrumentation for Safeguards Bus Degraded Voltage and Loss of Voltage Protection	60a
3.2.7	Instrumentation for Safety/Relief Valve Low-Low Set Logic	60b
3.2.8	Other Instrumentation	60d
3.2.9	Instrumentation for Control Room Habitability Protection	60e
4.2.1	Minimum Test and Calibration Frequency for Core Cooling, Rod Block and Isolation Instrumentation	61
4.6.1	Snubber Visual Inspection Interval	132a
3.8.1	Main Condenser Offgas Instrumentation	194
4.8.1	Main Condenser Offgas Instrumentation Surveillance Requirements	195

LIST OF TABLES (Cont'd)

Table No.		Page
3.13.1	Safety Related Fire Detection Instruments	227d
3.14.1	Instrumentation for Accident Monitoring	229b
4.14.1	Minimum Test and Calibration Frequency for Accident Monitoring Instrumentation	229d
6.1.1	Minimum Shift Crew Composition	236

Y. Shutdown - The reactor is in a shutdown condition when the reactor mode switch is in the shutdown mode position and no core alterations are being performed. In this condition, a reactor scram is initiated and a rod block is inserted directly from the mode switch. The scram can be reset after a short time delay.

1. Hot Shutdown means conditions as above with reactor coolant temperature greater than 212°F.
2. Cold Shutdown means conditions as above with reactor coolant temperature equal to or less than 212°F.

Z. Simulated Automatic Actuation - Simulated automatic actuation means applying a simulated signal to the sensor to actuate the circuit in question.

AA. Transition Boiling - Transition boiling means the boiling regime between nucleate and film boiling, also referred to as partial nucleate boiling. Transition boiling is the regime in which both nucleate and film boiling occur intermittently with neither type being completely stable.

AB. Pressure Boundary Leakage - Pressure boundary leakage shall be leakage through a non-isolable fault in the reactor coolant system pressure boundary.

AC. Identified Leakage - Identified leakage shall be:

1) Reactor coolant leakage into drywell collection systems, such as pump seal or valve packing leaks, that is captured and conducted to a sump or collecting tank, or
2) Reactor coolant leakage into the drywell atmosphere from sources which are specifically located and known not to be Pressure Boundary Leakage or which do not significantly impair the methods used to detect reactor coolant leakage.

AD. Unidentified Leakage - Unidentified leakage shall be all reactor coolant leakage which is not Identified Leakage.

AE. through AH. (Deleted)

AI. Purging - Purging is the controlled process of discharging air or gas from a confinement to maintain temperature, pressure, humidity, concentration, or other operating condition, in such a manner that replacement air or gas is required to purify the confinement.

AJ. Venting - Venting is the controlled process of discharging air or gas from a confinement to maintain temperature, pressure, humidity, concentration, or other operating condition, in such a manner that replacement air or gas is not provided or required.

AK. Dose Equivalent I-131 - Dose Equivalent I-131 is the concentration of I-131 (microcuries/gram) which alone would produce the same thyroid dose as the quantity and isotopic mixture of I-131, I-132, I-133, I-134 and I-135 actually present. The thyroid dose conversion factors used for this calculation shall be those listed in Table III of TID-14844, "Calculation of Distance Factors for Power and Test Reactor Sites" or in NRC Regulatory Guide 1.109, Rev 1, October, 1977.

AL. through AP. (Deleted)

AQ. Core Operating Limits Report The Core Operating Limits Report is the unit specific document that provides core operating limits for the current operating reload cycle. These cycle-specific operating limits shall be determined for each reload cycle in accordance with Specification 6.7.A.7. Plant operation within these operating limits is addressed in individual specifications.

AR. Allowable Value - The Allowable Value is the limiting value of the sensed process variable at which the trip setpoint may be found during instrument surveillance.

3.0 LIMITING CONDITIONS FOR OPERATION

3.8 MAIN CONDENSER OFFGAS

Applicability:

Applies to the radioactive release rate from the steam jet air ejectors.

Objective:

To limit the doses received at the site boundary from main condenser offgas in the event that effluent is discharged with less than full treatment.

Specification:

A. Main Condenser Offgas Activity

1. The gross gamma radioactivity release rate measured at the steam jet air ejector shall be limited to $\leq 2.6 \times 10^5$ uci/sec following a 30-minute decay.

2. When the limit in 1 above is exceeded, restore the gross gamma radioactivity release rate to within the limit within 72 hours or be in at least hot shutdown within the next 12 hours.

3. The activity of radioactive material in gaseous form removed from the main condenser shall be continuously monitored by the steam jet air ejector monitors in accordance with Table 3.8.1.

4.0 SURVEILLANCE REQUIREMENTS

4.8 MAIN CONDENSER OFFGAS

Applicability:

Applies to the sampling and monitoring of radioactive effluents discharged from the steam jet air ejectors and verification of equipment operability.

Objective:

To limit the doses received at the site boundary from main condenser offgas in the event that effluent is discharged with less than full treatment.

Specification:

A. Main Condenser Offgas Activity

1. The gross gamma radioactivity of noble gases from the main condenser air ejector shall be determined to be within the limit specified in 3.8.A.1 at the following times by performing an isotopic analysis of a representative sample of gases:

   a. Once every month.

   b. Within 24 hours following an increase in the continuous monitor reading of 50% after factoring out increases due to power level.

3.0 LIMITING CONDITIONS FOR OPERATION	4.0 SURVEILLANCE REQUIREMENTS
4. The steam jet air ejector monitors shall be set to automatically terminate offgas flow within 30 minutes at the limit established in Specification 3.8.A.1.	2. Surveillance of main condenser offgas instruments shall be performed as required by Table 4.8.1.

TABLE 3.8.1 - MAIN CONDENSER OFFGAS INSTRUMENTATION

Instrument	Minimum Channels Operable	Applicability	Action if Minimum Channels not Operable
Main Condenser Air Ejector Noble Gas Activity Monitor	2	During air ejector operation	From and after the date that one of the two steam jet air ejector off-gas radiation monitors is made or found to be inoperable, continued reactor power operation is permissible provided the inoperable radiation monitor instrument channel is tripped. Upon loss of both steam jet air ejector off-gas radiation monitors, be in Hot Standby within six hours.

TABLE 4.8.1 MAIN CONDENSER OFFGAS INSTRUMENTATION SURVEILLANCE REQUIREMENTS

Instrument	Sensor Check Frequency	Source Check Frequency	Functional Test Frequency	Calibration Frequency
Main Condenser Air Ejector Noble Gas Activity Monitors	Daily during air ejector operation	–	Quarterly	Once Each Operating Cycle

Bases 3.8/4.8:

A. Main Condenser Offgas

Specification 3.8.A.1 establishes a maximum activity at the steam jet air ejector. Restricting the gross radioactivity rate of noble gases from the main condenser provides reasonable assurance that the total body exposure to an individual at the restricted area boundary will not exceed the limits of 10 CFR Part 20 in the event this effluent is inadvertently discharged directly to the environment with minimal treatment. This specification implements the requirements of General Design Criteria 60 and 64 of Appendix A to 10 CFR Part 50.

Bases 3.11 (Continued):

This limit was determined based upon bounding analyses for the limiting transient at the given core power level.

At thermal power levels less than or equal to 25% of rated thermal power, operating plant experience indicates that the resulting MCPR value is in excess of requirements by a considerable margin. MCPR evaluation below this power level is therefore unnecessary. The daily requirement for calculating MCPR above 25% of rated thermal power is sufficient since power distribution shifts are very slow when there have not been significant power or control rod changes.

Those abnormal operational transients, analyzed in FSAR Section 14.5, which result in an automatic reactor scram are not considered a violation of the LCO. Exceeding MCPR limits in such cases need not be reported.

References

1. "General Electric Company Analytical Model for Loss-of-Coolant Analysis in Accordance with 10 CFR 50, Appendix K", NEDE-20566, November, 1975.

2. "Loss-of-Coolant Accident Analysis Report for the Monticello Nuclear Generating Plant", NEDO-24050-1, December, 1980, L O Mayer (NSP) to Director of Nuclear Reactor Regulation (USNRC), February 6, 1981.

Bases 4.11

The APLHGR, LHGR and MCPR shall be checked daily to determine if fuel burnup, or control rod movement have caused changes in power distribution. Since changes due to burnup are slow, and only a few control rods are removed daily, a daily check of power distribution is adequate. For a limiting value to occur below 25% of rated thermal power, an unreasonably large peaking factor would be required, which is not the case for operating control rod sequences. In addition, the MCPR is checked whenever changes in the core power level or distribution are made which have the potential of bringing the fuel rods to their thermal-hydraulic limits.

Bases 3.15/4.15:

The inservice inspection program for the Monticello plant conforms to the requirements of 10 CFR 50, Section 50.55a(g). Where practical, the inspection of components classified into NRC Quality Groups A, B, and C conforms to the requirements of ASME Code Class 1, 2, and 3 components, respectively, contained in Section XI of the ASME Boiler and Pressure Vessel Code. A program of inservice testing of Quality Group A, B, and C pumps and valves is also in effect at the Monticello plant, that conforms to the requirements contained in Section XI of the ASME Boiler and Pressure Vessel Code or where alternate testing is justified in accordance with Generic Letter 89-04. If a Code required inspection is impractical for the Monticello facility, a request for a deviation from that requirement is submitted to the Commission in accordance with 10 CFR 50, Section 50.55a(g)(6)(i).

Deviations which are needed from the procedures prescribed in Section XI of the ASME Code and applicable Addenda will be reported to the Commission prior to the beginning of each 10-year inspection period if they are known to be required at that time. Deviations which are identified during the course of inspection will be reported quarterly throughout the inspection period.

6.5 Plant Operating Procedures

Detailed written procedures, including the applicable check-off lists and instructions, covering areas listed below shall be prepared and followed. These procedures and changes thereto, except as specified in 6.5.G shall be reviewed by the Operations Committee and approved by a member of plant management designated by the plant manager.

A. Plant Operations

1. Integrated and system procedures for normal startup, operation and shutdown of the reactor and all systems and components involving nuclear safety of the facility.

2. Fuel handling operations.

3. Actions to be taken to correct specific and foreseen potential or actual malfunction of systems or components including responses to alarms, primary system leaks and abnormal reactivity changes and including follow-up actions required after plant protective system actions have initiated.

4. Surveillance and testing requirements that could have an effect on nuclear safety.

5. Implementing procedures of the emergency plan, including procedures for coping with emergency conditions involving potential or actual releases of radioactivity.

6. Implementing procedures of the fire protection program.

7. Quality assurance for effluent and environmental monitoring.

8. All programs specified in Specification 6.8.

Drills on the procedures specified in A.3 above shall be conducted as a part of the retraining program. Drills on the procedures specified in A.5 above shall be conducted at least semi-annually, including a check of communications with offsite support groups.

B. (Deleted)

C. Maintenance and Test

The following maintenance and test procedures will be developed to satisfy routine inspection, preventive maintenance programs, and operating license requirements:

1. Routine testing of Engineered Safeguards and equipment as required by the facility license and the Technical Specifications.

2. Routine testing of standby and redundant equipment.

3 Preventive or corrective maintenance of plant equipment and systems that could have an effect on nuclear safety.

4. Calibration and preventive maintenance of instrumentation that could affect the nuclear safety of the plant.

5. Special testing of equipment for proposed changes to operational procedures or proposed system design changes.

D. (Deleted)

E. (Deleted)

F. Security

Procedures shall be developed to implement the requirements of the Security Plan and the Security Contingency Plan. These implementing procedures, with the exception of those non-safety related procedures governing work activities exclusively applicable to or performed by security personnel, shall be reviewed by the Operations Committee and approved by a member of plant management designated by the plant manager. Security procedures not reviewed by the Operations Committee shall be reviewed and approved by the security manager.

G. Temporary Changes to Procedures

Temporary changes to those procedures which are required to be reviewed by the Operations Committee described in A, C and F above, which do not change the intent of the original procedures may be made with the concurrence of two members of the unit management staff, at least one of whom holds a Senior Operator License. Such changes should be documented, reviewed by the Operations Committee and approved by a member of plant management designated by the Plant Manager within one month. Temporary changes to security procedures not reviewed by the Operations Committee shall be reviewed by the security manager for security procedures.

6.6 Plant Operating Records

A. Records Retained for Five Years

Records and logs relative to the following items shall be retained for a minimum of five years:

1. Normal plant operation including such items as power level, periods of operation at each level, fuel exposure and shutdowns.

2. Written shift supervisory and reactor logs.

3. Periodic checks, inspections, tests and calibrations of components and systems, as related to these Technical Specifications.

4. Reviews of changes made to procedures or equipment and reviews of tests and experiments.

5. Principal maintenance activities, including inspection, repairs and substitution or replacement of principal items of equipment pertaining to nuclear safety.

6. Records of changes to plant procedures and records of specials tests and experiments.

7. Records of wind speed and direction.

8. Records of individual plant staff members showing qualifications, training and retraining.

9. Reportable Occurrences.

B. Records Retained for Plant Life

Records and logs relative to the following items shall be retained for the life of the plant:

1. Liquid and gaseous radioactive releases to the environs

2. Radiation exposures for all plant, visitor and contractor personnel

3. Offsite environmental monitoring surveys

4. Fuel accountability including new and spent fuel inventories and transfers, and fuel assembly histories

5. Radioactive shipments

6. Plant radiation and contamination surveys

7. Changes made to the plant as it is described in the Final Safety Analysis Report, reflected in updated, corrected and as-built drawings

8. Cycling beyond normal limits for those components that have been designed to operate safely for a limited number of cycles beyond such limits

9. Reactor coolant system in-service inspections

10. Minutes of meetings of the Safety Audit Committee

11. Records of the service lives of all safety-related snubbers, including the date at which the service life commences and associated installation and maintenance records.

2. Occupational Radiation Exposure Report

A tabulation on an annual basis of the number of station, utility, and other personnel (including contractors) for whom monitoring was performed, receiving an annual deep dose equivalent > 100 mrems and the associated collective deep dose equivalent (reported in person - rem) according to work and job functions (e.g., reactor operations and surveillance, inservice inspection, routine maintenance, special maintenance, waste processing, and refueling). This tabulation supplements the requirements of 10 CFR 20.2206. The dose assignments to various duty functions may be estimated based on pocket ionization chamber, thermoluminescence dosimeter (TLD), electronic dosimeter, or film badge measurements. Small exposures totaling < 20 percent of the individual dose need not be accounted for. In the aggregate, at least 80 percent of the total deep dose equivalent received from external sources should be assigned to specific major work functions. The report covering the previous calendar year shall be submitted by April 30 of each year.

3. Monthly Operating Report. A monthly report of operating statistics and shutdown experience covering the previous month shall be submitted by the 15th of the following month.

4. Radioactive Effluent Release Report

The Radioactive Effluent Release Report covering the operation of the unit during the previous year shall be submitted prior to May 15 of each year in accordance with 10 CFR 50.36a. The report shall include a summary of the quantities of radioactive liquid and gaseous effluents and solid waste released from the unit. The material provided shall be consistent with the objectives outlined in the ODCM and in conformance with 10 CFR 50.36a and 10 CFR Part 50, Appendix I, Section IV.B.1.

5. (Deleted)

6. Report of Safety/Relief Valve Failures and Challenges. An annual report of safety/relief valve failures and challenges shall be submitted prior to March 1st of each year.

7. Core Operating Limits Report

a. Core operating limits shall be established and documented in the Core Operating Limits Report before each reload cycle or any remaining part of a reload cycle for the following:

Rod Block Monitor Operability Requirements (Specification 3.2.C.2a)
Rod Block Monitor Upscale Trip Settings (Table 3.2.3, Item 4.a)
Recirculation System Power to Flow Map Stability Regions (Specification 3.5.F)
Maximum Average Planar Linear Heat Generation Rate Limits (Specification 3.11.A)
Linear Heat Generation Rate Limits (Specification 3.11.B)
Minimum Critical Power Ratio Limits (Specification 3.11.C)
Power to Flow Map (Bases 2.3.A)

b. The analytical methods used to determine the core operating limits shall be those previously reviewed and approved by the NRC, specifically those described in the following documents:

NEDE-24011-P-A, "General Electric Standard Application for Reactor Fuel" (the approved version at the time the reload analyses are performed)

NSPNAD-8608-A, "Reload Safety Evaluation Methods for Application to the Monticello Nuclear Generating Plant" (the approved version at the time the reload analyses are performed)

NSPNAD-8609-A, "Qualification of Reactor Physics Methods for Application to Monticello" (the approved version at the time the reload analyses are performed)

NEDO-31960, "BWR Owners' Group Long-Term Stability Solutions Licensing Methodology," June 1991 (the approved version at the time the reload analyses are performed)

NEDO-31960, Supplement 1, "BWR Owners' Group Long-Term Stability Solutions Licensing Methodology," March 1992 (the approved version at the time the reload analyses are performed)

c. The core operating limits shall be determined such that all applicable limits (e.g., fuel thermal-mechanical limits, core thermal-hydraulic limits, ECCS limits, nuclear limits such as shutdown margin, transient analysis limits and accident analysis limits) of the safety analysis are met.

d. The Core Operating Limits Report, including any mid-cycle revisions or supplements, shall be supplied upon issuance, for each reload cycle, to the NRC Document Control Desk with copies to the Regional Administrator and Resident Inspector.

B. Reportable Events

The following actions shall be taken for Reportable Events:

a. The Commission shall be notified by a report submitted pursuant to the requirements of Section 50.73 to 10 CFR Part 50 and,

b. Each Reportable Event shall be reviewed by the Operations Committee and the results of this review shall be submitted to the Safety Audit Committee and the corporate officer with direct responsibility for the plant.

C. Environmental Reports

1. Annual Radiological Environmental Operating Report

The Annual Radiological Environmental Operating Report covering the operation of the site during the previous calendar year shall be submitted by May 15 of each year. The report shall include summaries, interpretations, and analyses of trends of the results of the Radiological Environmental Monitoring Program for the reporting period. The material provided shall be consistent with the objectives outlined in the Offsite Dose Calculation Manual (ODCM), and in 10 CFR 50, Appendix I, Sections IV.B.2, IV.B.3, and IV.C.

The Annual Radiological Environmental Operating Report shall include the results of analyses of all radiological environmental samples and of all environmental radiation measurements taken during the period pursuant to the locations specified in the table and figures in the ODCM, as well as summarized and tabulated results of these analyses and measurements in the format of the table in the Radiological Assessment Branch Technical Position, Revision 1, November 1979. In the event that some individual results are not available for inclusion with the report, the report shall be submitted noting and explaining the reasons for the missing results. The missing data shall be submitted in a supplementary report as soon as possible.

2. (Deleted)

3. Other Environmental Reports (non-radiological, non-aquatic)

   a. Environmental events that indicate or could result in a significant environmental impact causally related to plant operation. The following are examples: excessive bird impaction; onsite plant or animal disease outbreaks; unusual mortality of any species protected by Endangered Species Act of 1973; increase in nuisance organisms or conditions; or excessive environmental impact caused by herbicide application to transmission corridors associated with the plant. This report shall be submitted within 30 days of the event and shall (a) describe, analyze, and evaluate the event, including extent and magnitude of the impact and plant operating characteristics, (b) describe the probable cause of the event, (c) indicate the action taken to correct the reported event, (d) indicate the corrective action taken to preclude repetition of the event and to prevent similar occurrences involving similar components or systems, and (e) indicate the agencies notified and their preliminary responses.

   b. Proposed changes, tests or experiments which may result in a significant increase in any adverse environmental impact which was not previously reviewed or evaluated in the Final Environmental Statement or supplements thereto. This report shall include an evaluation of the environmental impact of the proposed activity and shall be submitted 30 days prior to implementing the proposed change, test or experiment.

D. Special Reports

Unless otherwise indicated, special reports required by the Technical Specification shall be submitted within the time period specified for each report.

6.8 Programs and Manuals

A. Offsite Dose Calculation Manual (ODCM)

1. The ODCM shall contain the methodology and parameters used in the calculation of offsite doses resulting from radioactive gaseous and liquid effluents, in the calculation of gaseous and liquid effluent monitoring alarm and trip setpoints, and in the conduct of the radiological environmental monitoring program; and

2. The ODCM shall also contain the radioactive effluent controls and radiological environmental monitoring activities and descriptions of the information that should be included in the Annual Radiological Environmental Operating, and Radioactive Effluent Release Reports, required by Specification 6.7.C.1 and Specification 6.7.A.4.

3. Licensee initiated changes to the ODCM:

   a. Shall be documented and records of reviews performed shall be retained. This documentation shall contain:

      1) sufficient information to support the change(s) together with the appropriate analyses or evaluations justifying the change(s), and

      2) a determination that the change(s) maintain the levels of radioactive effluent control required by 10 CFR 20.1302, 40 CFR 190, 10 CFR 50.36a, and 10 CFR 50, Appendix I, and not adversely impact the accuracy or reliability of effluent, dose, or setpoint calculations;

   b. Shall become effective after the approval of the plant manager; and

   c. Shall be submitted to the NRC in the form of a complete, legible copy of the entire ODCM as a part of or concurrent with the Radioactive Effluent Release Report for the period of the report in which any change in the ODCM was made. Each change shall be identified by markings in the margin of the affected pages, clearly indicating the area of the page that was changed, and shall indicate the date (i.e., month and year) the change was implemented.

B. Primary Coolant Sources Outside Containment

This program provides controls to minimize leakage from those portions of systems outside containment that could contain highly radioactive fluids during a serious transient or accident to levels as low as practicable. The systems include Core Spray, High Pressure Coolant Injection, Residual Heat Removal, Reactor Core Isolation Cooling, Combustible Gas Control, process sampling, and Standby Gas Treatment. The program shall include the following:

1. Preventive maintenance and periodic visual inspection requirements; and

2. Integrated leak test requirements for each system at refueling cycle intervals or less.

The provisions of Specification 4.0.B are applicable.

A program acceptable to the Commission was described in a letter dated December 31, 1979, from L O Mayer, NSP, to Director of Nuclear Reactor Regulation, "Lessons Learned Implementation."

C. Post Accident Sampling

This program provides controls that ensure the capability to obtain and analyze reactor coolant, radioactive gases, and particulates in plant gaseous effluents and containment atmosphere samples under accident conditions. The program shall include the following:

1. Training of personnel;

2. Procedures for sampling and analysis; and

3. Provisions for maintenance of sampling and analysis equipment.

D. Radioactive Effluent Controls Program

This program conforms to 10 CFR 50.36a for the control of radioactive effluents and for maintaining the doses to members of the public from radioactive effluents as low as reasonably achievable. The program shall be contained in the ODCM, shall be implemented by procedures, and shall include remedial actions to be taken whenever the program limits are exceeded. The program shall include the following elements:

1. Limitations on the functional capability of radioactive liquid and gaseous monitoring instrumentation including surveillance tests and setpoint determination in accordance with the methodology in the ODCM;

2. Limitations on the concentrations of radioactive material released in liquid effluents to unrestricted areas, conforming to ten times the concentration values in Appendix B, Table 2, Column 2 to 10 CFR 20.1001-20.2402;

3. Monitoring, sampling, and analysis of radioactive liquid and gaseous effluents in accordance with 10 CFR 20.1302 and with the methodology and parameters in the ODCM;

4. Limitations on the annual and quarterly doses or dose commitment to a member of the public from radioactive materials in liquid effluents released from the site to unrestricted areas, conforming to 10 CFR 50, Appendix I;

5. Determination of cumulative and projected dose contributions from radioactive effluents for the current calendar quarter and current calendar year in accordance with the methodology and parameters in the ODCM at least monthly;

6. Limitations on the functional capability and use of the liquid and gaseous effluent treatment systems to ensure that appropriate portions of these systems are used to reduce releases of radioactivity when the projected doses in a period of 31 days would exceed 2% of the guidelines for the annual dose or dose commitment, conforming to 10 CFR 50, Appendix I;

7. Limitations on the dose rate resulting from radioactive material released in gaseous effluents from the site to areas at or beyond the site boundary shall be in accordance with the following:

   a. For noble gases: a dose rate of $\leq$500 mrem/yr to the whole body and a dose rate of $\leq$3000 mrem/yr to the skin, and

   b. For iodine-131, iodine-133, tritium, and all radionuclides in particulate form with half-lives greater than 8 days: a dose rate $\leq$1500 mrem/yr to any organ;

8. Limitations on the annual and quarterly air doses resulting from noble gases released in gaseous effluents from the site to areas at or beyond the site boundary, conforming to 10 CFR 50, Appendix I.

9. Limitations on the annual and quarterly doses to a member of the public from iodine-131, iodine-133, tritium, and all radionuclides in particulate form with half lives >8 days in gaseous effluents released from the site to areas beyond the site boundary, conforming to 10 CFR 50, Appendix I;

10. Limitations on the annual dose or dose commitment to any member of the public, beyond the site boundary, due to releases of radioactivity and to radiation from uranium fuel cycle sources, conforming to 40 CFR 190; and

11. Limitations on venting and purging of the containment through the Standby Gas Treatment System to maintain releases as low as reasonably achievable.

The provisions of Specifications 4.0.B, 4.0.D and 4.0.E are applicable to the Radioactive Effluent Controls Program surveillance frequency.

6.8.E through 6.8.H - RESERVED

I. Explosive Gas and Storage Tank Radioactivity Monitoring Program

This program provides controls for potentially explosive gas mixtures contained in the Offgas Treatment System, the quantity of radioactivity contained in gas storage tanks or fed into the offgas treatment system, and the quantity of radioactivity contained in unprotected outdoor liquid storage tanks. The quantity of radioactivity after 12 hours holdup contained in each gas storage tank shall be limited to ≤22,000 curies of noble gases (considered as dose equivalent Xe-133). The quantity of liquid radioactive material contained in each outside temporary tank shall be limited to ≤10 curies, excluding tritium and dissolved or entrained noble gases.

The program shall include:

1. The limits for concentrations of hydrogen and oxygen in the Offgas Treatment System and a surveillance program to ensure the limits are maintained. Such limits shall be appropriate to the system's design criteria (i.e., whether or not the system is designed to withstand a hydrogen explosion);

2. A surveillance program to ensure that the quantity of radioactivity contained in each gas storage tank and fed into the offgas treatment system is less than the amount that would result in a whole body exposure of ≥ 0.5 rem to any individual in an unrestricted area, in the event of an uncontrolled release of the tanks' contents; and

3. A surveillance program to ensure that the quantity of radioactivity contained in all outdoor liquid radwaste tanks that are not surrounded by liners, dikes, or walls, capable of holding the tanks' contents and that do not have tank overflows and surrounding area drains connected to the Liquid Radwaste Treatment System is less than the amount that would result in concentrations less than the limits of 10 CFR 20, Appendix B, Table 2, Column 2, at the nearest potable water supply and the nearest surface water supply in an unrestricted area, in the event of an uncontrolled release of the tanks' contents.

The provisions of Specifications 4.0.B, 4.0.D and 4.0.E are applicable to the Explosive Gas and Storage Tank Radioactivity Monitoring Program surveillance frequencies.

6.8.J - RESERVED

K. Technical Specifications (TS) Bases Control Program

This program provides a means for processing changes to the Bases of these Technical Specifications.

1. Changes to the Bases of the TS shall be made under appropriate administrative controls and reviews.

2. Changes to Bases may be made without prior NRC approval provided the changes do not involve either of the following:

   a. a change in the TS incorporated in the license; or

   b. a change to the USAR or Bases that requires NRC approval pursuant to 10 CFR 50.59.

3. The Bases Control Program shall contain provisions to ensure that the Bases are maintained consistent with the USAR.

4. Proposed changes to the Bases that involve changes as described in a. or b. of Specification 6.8.K above shall be reviewed and approved by the NRC prior to implementation. Changes to the Bases implemented without prior NRC approval shall be provided to the NRC on a frequency consistent with 10 CFR 50.71(e).

6.9 High Radiation Area

As provided in paragraph 20.1601(c) of 10 CFR Part 20, the following controls shall be applied to high radiation areas in place of the controls required by paragraph 20.1601(a) and (b) of 10 CFR Part 20:

A. High Radiation Areas with Dose Rates Not Exceeding 1.0 rem/hour at 30 centimeters from the Radiation Source or from any Surface Penetrated by the Radiation

1. Each entryway to such an area shall be barricaded and conspicuously posted as a high radiation area. Such barricades may be opened as necessary to permit entry or exit of personnel or equipment.

2. Access to, and activities in, each such area shall be controlled by means of Radiation Work Permit (RWP) or equivalent that includes specification of radiation dose rates in the immediate work area(s) and other appropriate radiation protection equipment and measures.

3. Individuals qualified in radiation protection procedures and personnel continuously escorted by such individuals may be exempted from the requirement for an RWP or equivalent while performing their assigned duties provided that they are otherwise following plant radiation protection procedures for entry to, exit from, and work in such areas.

4. Each individual or group entering such an area shall possess:

   a. A radiation monitoring device that continuously displays radiation dose rates in the area, or

   b. A radiation monitoring device that continuously integrates the radiation dose rates in the area and alarms when the device's dose alarm setpoint is reached, with an appropriate alarm setpoint, or

   c. A radiation monitoring device that continuously transmits dose rate and cumulative dose information to a remote receiver monitored by radiation protection personnel responsible for controlling personnel radiation exposure within the area, or

d. A self-reading dosimeter (e.g., pocket ionization chamber or electronic dosimeter) and,

1) Be under the surveillance, as specified in the RWP or equivalent, while in the area, of an individual qualified in radiation protection procedures, equipped with a radiation monitoring device that continuously displays radiation dose rates in the area; who is responsible for controlling personnel exposure within the area, or

2) Be under the surveillance as specified in the RWP or equivalent, while in the area, by means of closed circuit television, of personnel qualified in radiation protection procedures, responsible for controlling personnel radiation exposure in the area, and with the means to communicate with individuals in the area who are covered by such surveillance.

5. Except for individuals qualified in radiation protection procedures, or personnel continuously escorted by such individuals, entry into such areas shall be made only after dose rates in the area have been determined and entry personnel are knowledgeable of them. These continuously escorted personnel will receive a pre-job briefing prior to entry into such areas. This dose rate determination, knowledge, and pre-job briefing does not require documentation prior to initial entry.

B. <u>High Radiation Areas with Dose Rates Greater than 1.0 rem/hour at 30 centimeters from the Radiation Source or from any Surface Penetrated by the Radiation, but less than 500 rads/hour at 1 meter from the Radiation Source or from any Surface Penetrated by the Radiation</u>

1. Each entryway to such an area shall be conspicuously posted as a high radiation area and shall be provided with a locked or continuously guarded door or gate that prevents unauthorized entry, and, in addition:

a. All such door and gate keys shall be maintained under the administrative control of the shift supervisor, radiation protection manager, or his or her designee.

b. Doors and gates shall remain locked except during periods of personnel or equipment entry or exit.

2. Access to, and activities in, each such area shall be controlled by means of an RWP or equivalent that includes specification of radiation dose rates in the immediate work area(s) and other appropriate radiation protection equipment and measures.

3. Individuals qualified in radiation protection procedures may be exempted from the requirement for an RWP or equivalent while performing radiation surveys in such areas provided that they are otherwise following plant radiation protection procedures for entry to, exit from, and work in such areas.

4. Each individual or group entering such an area shall possess:

   a. A radiation monitoring device that continuously integrates the radiation dose rates in the area and alarms when the device's dose alarm setpoint is reached, with an appropriate alarm setpoint, or

   b. A radiation monitoring device that continuously transmits dose rate and cumulative dose information to a remote receiver monitored by radiation protection personnel responsible for controlling personnel radiation exposure within the area with the means to communicate with and control every individual in the area, or

   c. A self-reading dosimeter (e.g., pocket ionization chamber or electronic dosimeter) and,

      1) Be under surveillance, as specified in the RWP or equivalent, while in the area, of an individual qualified in radiation protection procedures, equipped with a radiation monitoring device that continuously displays radiation dose rates in the area; who is responsible for controlling personnel exposure within the area, or

      2) Be under the surveillance as specified in the RWP or equivalent, while in the area, by means of closed circuit television, of personnel qualified in radiation protection procedures, responsible for controlling personnel radiation exposure in the area, and with the means to communicate with and control every individual in the area.

   d. In those cases where options b. and c. above are impractical or determined to be inconsistent with the "As Low As is Reasonably Achievable" principle, a radiation monitoring device that continuously displays radiation dose rates in the area.

5. Except for individuals qualified in radiation protection procedures, or personnel continuously escorted by such individuals, entry into such areas shall be made only after dose rates in the area have been determined and entry personnel are knowledgeable of them. These continuously escorted personnel will receive a pre-job briefing prior to entry into such areas. This dose rate determination, knowledge, and pre-job briefing does not require documentation prior to initial entry.

6. Such individual areas that are within a larger area where no enclosure exists for the purpose of locking and where no enclosure can reasonably by constructed around the individual area need not be controlled by a locked door or gate, nor continuously guarded, but shall be barricaded, conspicuously posted, and a clearly visible flashing light shall be activated at the area as a warning device.

Exhibit D

License Amendment Request
Radiological Effluent Technical Specifications Conformance
To Standard Technical Specifications and Generic Letter 89-01

Summary Table of Technical Specification Changes

RETS LAR Summary Table

Spec. No.	Title	Action
1.0	Definitions	Delete AE, AF, AG (move to program), AH, AI, AJ, AM, AN, AO, AP (retain AK)
3.8/4.8	Radioactive Effluents	Revise applicability and objective
3.8.A/4.8.A	Liquid Effluents	Delete and relocate to ODCM
3.8.B.1	Gaseous Effluents - Dose Rate	Delete and relocate to ODCM
3.8.B.2	Gaseous Effluents - Dose from Noble Gases	Delete and relocate to ODCM
3.8.B.3	Gaseous Effluents - Dose from I-131	Delete and relocate to ODCM
3.8.B.4	Gaseous Effluents - Offgas Treatment System	Delete and relocate to ODCM, Program and Ops Manual
3.8.B.5	Gaseous Effluents - Main Condenser Offgas Activity	Retain as is
3.8.B.6	Gaseous Effluents - Containment Venting and Purging	Delete and relocate to ODCM
3.8.C	Solid Radioactive Waste	Delete and relocate to ODCM or PCP
3.8.D	Dose from All Uranium Fuel Cycle Sources	Delete and relocate to ODCM
Figure 3.8.1	Monticello Nuclear Generating Plant Site Boundary for Liquid Effluents	Delete and relocate to ODCM
Figure 3.8.2	Monticello Nuclear Generating Plant Site Boundary for Gaseous Effluents	Delete and relocate to ODCM
Table 3.8.1	Radioactive Liquid Effluent Monitoring Instrumentation	Delete and relocate to ODCM
Table 3.8.2	Radioactive Gaseous Effluent Monitoring Instrumentation	Delete all but SJAE monitors, relocate to ODCM
Table 4.8.1	Radioactive Liquid Effluent Monitoring Instrumentation Surveillance Requirements	Delete and relocated to ODCM
Table 4.8.2	Radioactive Gaseous Effluent Monitoring Instrumentation Surveillance Requirements	Delete all but SJAE monitors, relocate to ODCM
Table 4.8.3	Radioactive Waste Sampling and Analysis Program	Delete and relocate to ODCM
Table 4.8.4	Radioactive Gaseous Sampling and Analysis Program	Delete and relocate to ODCM
3.8/4.8 Bases		Delete all but SJAE monitors; relocate to ODCM
3.12/4.12	Sealed Source Contamination	Delete all but SJAE monitors and relocate to ODCM
4.16, Bases & Tables	Radiation Environmental Monitoring Program	Delete and move to program
6.5.A	Plant Operations (Operating Procedures)	Revise 7 and add 8
6.5.B.1	Radiological	Delete 1.a., relocate procedure review and approval to OQAP Relocate 1.b. & c. to TS 6.9, High Radiation Areas

RETS LAR Summary Table

Spec. No.	Title	Action
		per STS/TSTF
6.5.B.2		Relocate to program 6.8.B and revise
6.5.B.3		Delete – relocate to E-plan admin controls
6.5.B.4		Relocate to program 6.8.C
6.5.D	Process Control Program (PCP)	Delete
6.5.E	Offsite Dose Calculation Manual (ODCM)	Relocate to program and revise
6.6.A	Records Retained for Five Years	No change
6.6.B	Records Retained for Plant Life	No change
6.7.A.2	Occupational Exposure Report	Revise to STS and TSTF, delete footnote
6.7.A.4	Semiannual Radioactive Effluent Release Report	Revise to STS and TSTF, delete footnote
6.7.A.5	Annual Summaries of Meteorological Data	Delete
6.7.C.1	Annual Radiation Environmental Monitoring Report	Revise to STS and TSTF
6.7.C.2	Environmental Special Report	Delete, relocate to ODCM
6.7.C.3	Other Environmental Reports (non-radiological, non-aquatic)	No changes
6.8	Programs (Proposed in previous amendment request)	Change title
6.8.A	ODCM	ODCM program from STS
6.8.B	Primary Coolant Sources Outside Containment	From 6.5.B.2
6.8.C.	Post Accident Sampling	From 6.5.B.4
6.8.D	Radioactive Effluent Controls Program	Establishes program basis for 3.8 relocation to ODCM
6.8. E,F,G,H	"Reserved"	Preserves order of STS
6.8.I	Explosive Gas and Storage Tank Radioactivity Monitoring Program	New program - basis for portions of 3.8 deletion
6.8.J	"Reserved"	Preserves order of STS
6.8.K	Technical Specification Bases Control Program	Renumber from previous submittal to STS order
6.9	High radiation Areas	Relocated from 6.7.B.1 and revised to TS/TSTF

License Amendment Request
Radiological Effluent Technical Specifications Conformance
To Standard Technical Specifications and Generic Letter 89-01

Monticello Off-Site Dose Calculation Manual

This exhibit provides a copy of the Monticello Offsite Dose Calculation Manual (ODCM), revised to reflect relocation of the Technical Specification requirements. The revision to the ODCM was based on the guidance of NRC Generic Letter 89-01, Supplement 1, "Standard Radiological Effluent Controls for Boiling Water reactors," NUREG-1302. The revised ODCM is provided for NRC information

All required reviews of the ODCM are complete and the revised ODCM is ready for final signature. Upon approval of the license amendment proposed in Exhibit A, these documents will be approved and implemented.

Offsite Dose Calculation Manual

Table of Contents

Revision to ODCM memo

ODCM-01.01	Introduction
ODCM-02.01	Liquid Effluents
ODCM-03.01	Gaseous Effluents
ODCM-04.01	Liquid Effluent Calculations
ODCM-05.01	Gaseous Effluent Calculations
ODCM-06.01	Dose From All Uranium Fuel Cycle Sources
ODCM-07.01	Radiological Environmental Monitoring Program
ODCM-08.01	Reporting Requirements
ODCM-APP-A	Appendix A
ODCM-APP-B	Appendix B
ODCM-APP-C	Appendix C

Internal Correspondence

Date **November 30, 2000**

From **John Peterson** Location **Monticello**

To **Operations Committee** Location **Monticello**

Subject **Revision to Offsite Dose Calculation Manual**

The purpose of this letter is to describe the changes to the Offsite Dose Calculation Manual (ODCM), the reason for the changes, and in accordance with Tech. Spec. 6.5.E.1.b , provide a determination that the changes will not reduce the accuracy or reliability of dose calculations or setpoint determinations.

The ODCM was revised to take advantage of improvements offered by relocating the procedural details of the "Radiological Effluents Technical Specifications" (RETS) to the ODCM in accordance with Generic Letter 89-01 (GL89-01) and NUREG-1302 "Offsite Dose Calculation Manual Guidance: Standard Radiological Effluent Controls for Boiling Water Reactors". The NRC staff's intent in recommending the relocation of procedural details of the current RETS to the ODCM is to fulfill the goal of the Commission Policy Statement for Technical Specification Improvements.

This revision to the ODCM is being submitted to the Operations Committee for review at this time, however, this revision will not be implemented until the license amendment request removing the Radiological Effluent Technical Specifications from Monticello's Technical Specifications is approved by the Nuclear Regulatory Commission. This ODCM revision will be submitted with the License Amendment Request for information purposes in accordance with GL89-01.

SCOPE OF CHANGES

The following administrative changes were made to the ODCM :

1) RETS procedural details and bases were moved into ODCM-02.01 for liquid effluents and ODCM-03.01 for gaseous effluents.
2) The previous contents of ODCM-02.01 were moved to ODCM-04.01 and named "Liquid Effluent Calculations".
3) The previous contents of ODCM-03.01 were moved to ODCM-05.01 and named "Gaseous Effluent Calculations".
4) The MIDAS calculation methodology from ODCM-05.01 "Gaseous Effluents Calculations" was removed because the methodology was not used. The MIDAS methodology (contemporaneous dose calculation method) proved to be too complex, is not required, and therefore was not implemented. The current dose calculation methodology in ODCM-05.01 uses historical meteorology.
5) The previous contents of ODCM-05.01 were moved to ODCM-07.01 and named "RADIOLOGICAL ENVIRONMENTAL MONITORING PROGRAM".

6) The procedural details of T.S. section 4.16 "RADIATION ENVIRONMENTAL MONITORING PROGRAM" were relocated to ODCM-07.01.
7) References to 10 CFR Part 20.106 (Old 10CFR20) were replaced with 10 CFR Part 20.1001-20.2402 (New 10CFR20).

The following changes, which are not strictly administrative in nature, were made to the ODCM :

8) ODCM-07.01 "RADIOLOGICAL ENVIRONMENTAL MONITORING PROGRAM" (REMP) sampling locations were revised based upon recent Annual Land Use Census results and more accurate information resulting from the use of a Global Positioning Satellite (GPS) system instrument.
9) The reporting requirements in T.S. section 6.7 related to the ODCM, the record retention requirements identified in T.S. section 6.6 related to the ODCM, the Semi-Annual Effluent Report requirements, and the annual REMP reporting requirements were relocated to ODCM-08.01 and named "REPORTING REQUIREMENTS". The Semi-Annual Effluent Report was also changed to the Annual Effluent Report as prescribed by GL89-01.
10) ODCM-04.01 table 1 Maximum Permissible Concentrations for radionuclide I (MPCi) values from "Old" 10CFR20 table 2 column 2 were replaced with 10 times the concentration values in the "New" 10CFR20 table 2 column 2. The 10 times the concentration of 10CFR20 table 2 column 2 values used for effluents limits are a result of a Technical Specifications Task Force (TSTF) improvement initiative approved by the NRC. The TSTF is an industry initiative aimed at simplifying and improving Technical Specifications.
11) Dilution factors were removed from the Service Water Monitor and Turbine Building Normal Drain Sump monitor setpoint calculations. Deleting the dilution factors from the setpoints calculation makes the resultant setpoint valid for all modes of plant operation, and is more conservative (lower values).

Changes 1-7 are primarily administrative in nature.

Change 8 improves the accuracy of the sampling locations. This change does not reduce the accuracy or reliability of dose calculations or setpoint determinations.

Change 9 relocates the reporting and record retention requirements and changes the frequency of the Effluent Report in accordance with Standardized T.S. . This change does not reduce the accuracy or reliability of dose calculations or setpoint determinations.

Change 10 revises the MPCi values used to determine liquid monitor setpoints. The setpoint determination methodology is not changed. This change increases the value of the resultant setpoints and is less conservative, however, this change maintains the same overall level of effluent control while retaining the operational flexibility that exists with current TS under the previous 10 CFR 20. This change provides reasonable assurance that the levels of radioactive materials in bodies of water in Unrestricted Areas will result in exposures within (1) the Section II.A design objectives of appendix I to 10CFR Part 50 and (2) restrictions authorized by 10 CFR 20.1302 ("new 10CFR20"). This change does not reduce the accuracy or reliability of dose calculations or setpoint determinations and is addressed in the License Amendment Request "Radiological Effluent Technical Specifications Conformance To Standard Technical Specifications and Generic Letter 89-01".

Change 11 deletes the dilution factors from the setpoint calculation and makes the resulting setpoints more conservative. The setpoint determination methodology is not changed. This change does not reduce the accuracy or reliability of dose calculations or setpoint determinations.

CONCLUSION

The proposed ODCM changes, as listed above, will not reduce the accuracy or reliability of dose calculations or setpoint determinations as stated in T.S. section 6.5.

Prepared By:	D Peterson		
Reviewed By:	[illegible]		
OC Final Review Meeting:	2246	Date:	12/1/00
Approved By :	[illegible]	~~Date:~~	12/5/00
GSRS Approval:	[illegible]	Date:	12/5/00

MONTICELLO NUCLEAR GENERATING PLANT		ODCM-HISTORY
TITLE:	ODCM - HISTORY	Revision 0
		Page 1 of 1

RECORD OF REVISION

Revision No.	Date	Reason for Revision
0	May 2, 1979	Original.
1	February 29, 1980	Incorporation of NRC Staff comments and correction of miscellaneous errors.
2	July 23, 1982	Incorporation of NRC Staff comments, addition of short term vent dispersion parameters, and addition of Appendices D and E.
3	March 24, 1983	Change in milk sampling location.
4	December 12, 1983	Change in milk sampling locations and remove formula for converting μCi/sec to mrad/hr for stack and vent wide range gas monitors.
5	March 27, 1984	Change Table 3.2-1
6	January - 1988	Incorporation of MIDAS and complete retyping.
7	January - 1990	Incorporation of NRC staff comments, correction of miscellaneous errors, clarification of term abnormal release and addition of references to MNGP ODCM computer program.
0	November - 1993	Complete rewrite of ODCM creating modular format allowing changes of a section rather than the whole document.

"Record of Revision" is now incorporated into each individual procedure.

Prepared By: B Peterson	
Reviewed By:	
OC Final Review Meeting # 2242	Date: 11/02/2000
Approved By Plant Manager:	Date:

FOR ADMINISTRATIVE USE ONLY

3087 (DOCUMENT CHANGE, HOLD, AND COMMENT FORM) incorporated:

Resp Supv: CHEM	Assoc Ref: CHEM-I	SR: N	Freq: 2 yrs
ARMS: ODCM-HISTORY	Doc Type: 7030	Admin Initials:	Date:

l/plr

OFFSITE DOSE CALCULATION MANUAL - TABLE OF CONTENTS

SECTION		PAGE
1.0	RECORD OF REVISION	2
2.0	OFF-SITE DOSE CALCULATION MANUAL (ODCM) INTRODUCTION	3
2.1	ODCM Description and Control	3
2.2	Licensee Initiated Changes to the ODCM	4
2.3	Definitions	5
2.4	Radiological Effluent Controls And Surveillance Requirement	9

Prepared By:	
Reviewed By:	
OC Final Review Meeting: # 2242	Date: 11/02/2000
Approved By Plant Manager:	Date:

*This is a major rewrite, therefore, no sidelines are required.

3087 (DOCUMENT CHANGE, HOLD, AND COMMENT FORM) incorporated: 00-2346			
Resp Supv: CHEM	Assoc Ref: CHEM-I	SR: N	Freq: 2 yrs
ARMS: ODCM-01.01	Doc Type: 7030	Admin Initials:	Date:

l/plr

1.0 RECORD OF REVISION

Revision No.	Date	Reason for Revision
1	December - 1998	Corrected typo in reference to 10CFR50.36a on page 2, paragraph 1.
2	October - 2000	Incorporated Tech Spec 6.8.A.1, 6.8.A.2, and 6.8.A.3 relating to ODCM control and the relocated definitions into document.

2.0 OFF-SITE DOSE CALCULATION MANUAL (ODCM) INTRODUCTION

2.1 ODCM Description and Control

2.1.1 In accordance with T.S.6.8.A.1, the ODCM contains the methodology and parameters used in the calculation of off-site doses resulting from radioactive gaseous and liquid effluents, in the calculation of gaseous and liquid effluent monitoring alarm and trip setpoints, and in the conduct of the Radiological Environmental Monitoring Program.

2.1.2 In accordance with T.S.6.8.A.2, the ODCM also contains the radioactive effluent controls and radiological environmental monitoring activities and descriptions of the information that should be included in the Radiological Environmental Operating Program report and Radioactive Effluent Release reports required by 10CFR50, Appendix I, and 10CFR50.36a.

2.2 Licensee Initiated Changes to the ODCM

2.2.1 In accordance with T.S.6.8.A.3, licensee initiated changes to the ODCM ***SHALL*** be documented and records of reviews performed ***SHALL*** be retained. This documentation ***SHALL*** contain:

A. Sufficient information to support the change(s) together with the appropriate analyses or evaluations justifying the change(s), and

B. A determination that the change(s) maintain the levels of radioactive effluent control required by 10CFR20.1302, 40CFR190, 10CFR50.36a, and 10CFR50, Appendix I, and not adversely impact the accuracy or reliability of effluent, dose, or setpoint calculations.

2.2.2 Changes ***SHALL*** become effective after review and approval by the Plant Manager.

2.2.3 Changes ***SHALL*** be submitted to the NRC in the form of a complete, legible copy of the entire ODCM as a part of or concurrent with the Radioactive Effluent Release Report for the period of the report in which any change in the ODCM was made. Each change ***SHALL*** be identified by markings in the margin of the affected pages, clearly indicating the area of the page that was changed, and ***SHALL*** indicate the date (i.e., month and year) the change was implemented.

2.3 Definitions

2.3.1 Abnormal Release

An unplanned or uncontrolled release of radioactive material from the plant or a gaseous release where the effluent release rate significantly exceeds an established normal release rate. A release which results from procedural or equipment inadequacies, or personnel errors, that could indicate a deficiency.

2.3.2 Action

ACTION ***SHALL*** be that part of a control which prescribes required actions to be taken under designated conditions within specified completion times.

2.3.3 Batch Release

A BATCH RELEASE is a discharge of liquid or gaseous radioactive effluent of a discrete volume. Prior to sampling for analysis, each batch ***SHALL*** be isolated and thoroughly mixed to assure representative sampling.

2.3.4 Instrument Calibration

An instrument calibration means the adjustment of an instrument signal output so that it corresponds, within acceptable range, accuracy, and response time to a known value(s) of the parameter which the instrument monitors. Calibration ***SHALL*** encompass the entire instrument including actuation, alarm or trip.

2.3.5 Sensor Check

A qualitative determination of operability by observation of sensor behavior during operation. This determination ***SHALL*** include, where possible, comparison with other independent sensor measuring the same variable.

2.3.6 Instrument Functional Test

An instrument functional test means the injection of a simulated signal into the primary sensor to verify proper instrument channel response, alarm, and/or initiating action.

2.3.7 Composite Sample

A COMPOSITE SAMPLE is one in which the quantity of liquid sampled is proportional to the quantity of liquid waste discharged and in which the method of sampling employed results in a specimen which is representative of the liquids released.

2.3.8 Dose Equivalent I-131

DOSE EQUIVALENT I-131 ***SHALL*** be that concentration of I-131 (μCi/gram) that alone would produce the same thyroid dose as the quantity and isotopic mixture of I-131, I-132, I-133, I-134 and I-135 actually present. The thyroid dose conversion factors used for this calculation ***SHALL*** be those listed in Table III of TID-14844, "Calculation of Distance Factors for Power and Test Reactor Sites" or in NRC Regulatory Guide 1.109, Revision 1, October 1977.

2.3.9 Exclusion Area Boundary

The EXCLUSION AREA BOUNDARY is the same as the Site Boundary described in ODCM-03.01 Figure 1. The EXCLUSION AREA is the area encompassed by the EXCLUSION AREA BOUNDARY.

2.3.10 Offgas Treatment System

The OFFGAS TREATMENT SYSTEM ***SHALL*** be any system designed and installed to reduce radioactive effluents by collecting primary coolant system offgas from the primary system and providing for delay or holdup for the purpose of reducing the total radioactivity prior to release to the environment.

2.3.11 Liquid Radwaste Treatment System

The LIQUID RADWASTE TREATMENT SYSTEM ***SHALL*** be any system designed and installed to reduce radioactive effluents by holdup or collecting radioactive materials by means of filtering, evaporation, ion exchange or chemical reaction for the purpose of reducing the total radioactivity prior to release to the environment.

2.3.12 Long Term Release

"Long-term" refers to releases that are generally continuous and stable in release rate with some anticipated variation (i.e., <50%, based on a running monthly average) in release rate, such as is experienced in normal ventilation system effluents at nuclear power plants. Determination of doses due to long-term releases should use the historical annual average relative concentration (χ/Q) based on meteorological data summarized, as recommended in Regulatory Guide 1.111.

2.3.13 Members Of The Public

MEMBERS OF THE PUBLIC ***SHALL*** include all persons who are not occupationally associated with the plant. This category does not include employees of the utility, its contractors, or its vendors. Also excluded from this category are persons who enter the site to service equipment or to make deliveries. This category does include persons who use portions of this site for recreational, occupational, or other purposes not associated with the plant.

2.3.14 Operable - Operability

As defined in the Technical Specifications.

2.3.15 Purge - Purging

PURGE - PURGING ***SHALL*** be any controlled process of discharging air or gas from a confinement to maintain temperature, pressure, humidity, concentration or other operating condition, in such a manner that replacement air or gas is required to purify the confinement.

2.3.16 Radiological Environmental Monitoring Program (REMP)

The RADIOLOGICAL ENVIRONMENTAL MONITORING PROGRAM is established for monitoring the radiation and radionuclides in the environs of the plant. The program ***SHALL*** provide representative measurements of radioactivity in the highest potential exposure pathways and verification of the accuracy of potential exposure pathways and verification of the accuracy of the effluent monitoring program and modeling of the environmental exposure pathways.

2.3.17 Short Term Release

"Short-term" refers to releases that are intermittent in radionuclide concentrations or flow, such as releases from drywell purges and systems or components with infrequent use. Short-term releases may be due to operational variations which result in radioactive releases greater than 50% of the releases normally considered as long-term. Short-term releases from these sources during normal operation, including anticipated operational occurrences, are defined as those which occur for a total of 500 hours or less in a calendar year but not more than 150 hours in any quarter.

2.3.18 Site Boundary

Means a line within which the land is owned, leased, or otherwise controlled by the licensee. The site boundary for liquid releases of radioactive material is defined in ODCM-02.01 Figure 1. The site boundary for gaseous releases of radioactive material is defined in ODCM-03.01 Figure 1.

2.3.19 Source Check

A SOURCE CHECK ***SHALL*** be the qualitative assessment of channel response when the channel sensor is exposed to a radioactive source.

2.3.20 Unrestricted Area

An UNRESTRICTED AREA means any area at or beyond the site boundary to which access is not controlled by the licensee for purposes of protection of individuals from exposure to radiation and radioactive materials or any area within the site boundary used for residential quarters or industrial, commercial, institutional and/or recreational purposes.

2.3.21 Uranium Fuel Cycle

The URANIUM FUEL CYCLE is defined in 40CFR Part 190.02(b) as: "The operation of milling of uranium ore, chemical conversion of uranium, isotopic enrichment of uranium, fabrication of uranium fuel, generation of electricity by a light-water-cooled nuclear power plant using uranium fuel, and reprocessing of spent uranium fuel, to the extent that these directly support the production of electrical power for public use utilizing nuclear energy, but excludes mining operations, operations at waste disposal sites, transportation of any radioactive material in support of these operations, and the use of recovered non-uranium special nuclear and by-product materials from the cycle."

2.3.22 Venting

VENTING ***SHALL*** be the controlled process of discharging air or gas from a confinement to maintain temperature, pressure, humidity, concentration or other operating condition, in such a manner that replacement air or gas is NOT provided or required.

2.4 Radiological Effluent Controls And Surveillance Requirement

2.4.1 Controls

A. Compliance with the controls contained within the succeeding text is required during the conditions specified. Upon failure to meet the control, the associated ACTION requirements ***SHALL*** be met.

B. Noncompliance with a control ***SHALL*** exist when the requirements of the Control and associated ACTION requirements are not met within the specified time interval. If the Control is restored prior to expiration of the specified time interval, completion of the ACTION requirements is not required.

C. Noncompliance with a CONTROL and associated ACTION, or a Surveillance Requirement ***SHALL*** be documented in the annual "Radioactive Effluent Release Report" covering the period of the noncompliance. Documentation of a noncompliance ***SHALL*** identify the cause of the noncompliance, define the corrective actions taken to correct the noncompliance, and a description of actions taken to prevent recurrence.

2.4.2 Surveillance Requirements

A. Surveillance Requirements ***SHALL*** be met during the conditions specified for individual controls unless otherwise stated in an individual Surveillance Requirement.

B. Each Surveillance Requirement ***SHALL*** be performed within the specified time interval with the following exceptions:

1. Specified time intervals between tests may be adjusted plus 25% to accommodate normal test schedules.

C. Failure to perform a Surveillance Requirement within the allowed surveillance interval, defined by Control B. ***SHALL*** constitute noncompliance with the OPERABILITY requirements for a Control for operation. The time limits of the ACTION requirements are applicable at the time it is identified that a Surveillance Requirement has not been performed. The ACTION requirements may be delayed for up to 24 hours to permit the completion of the surveillance when the allowable outage time limits of the ACTION requirements are less than 24 hours. Surveillance Requirements do not have to be performed on inoperable equipment.

OFFSITE DOSE CALCULATION MANUAL - TABLE OF CONTENTS

SECTION		PAGE
1.0	RECORD OF REVISION	2
2.0	LIQUID EFFLUENTS	3
2.1	Concentration	3
2.2	Dose	4
2.3	Liquid Radwaste Treatment Systems	5
2.4	Liquid Holdup Tanks	6
2.5	Bases	7
Figure 1	Monticello Nuclear Generating Plant Site Boundary for Liquid Effluents	10
Table 1	Radioactive Liquid Effluent Monitoring Instrumentation Surveillance Requirements	11
Table 2	Radioactive Liquid Waste Sampling And Analysis Program	12
Table 3	Radioactive Liquid Effluent Monitoring Instrumentation	15

Prepared By: B. Peterson	
Reviewed By: [illegible]	
OC Final Review Meeting: # 2242	Date: 11/02/2000
Approved By Plant Manager:	Date:

*This is a major rewrite, therefore, no sidelines are required.

3087 (DOCUMENT CHANGE, HOLD, AND COMMENT FORM) incorporated: 00 - 2347			
Resp Supv: CHEM	Assoc Ref: CHEM-I	SR: N	Freq: 2 yrs
ARMS: ODCM-02.01	Doc Type: 7030	Admin Initials:	Date:

l/plr

1.0 RECORD OF REVISION

Revision No.	Date	Reason for Revision
1	December - 1998	Corrected reference to Table 2.1-1 from 2.1.2.
2	October - 2000	Incorporated Radiological Effluents Tech Specs section 3.8.A and 4.8.A. into document.

2.0 LIQUID EFFLUENTS

2.1 Concentration

2.1.1 Controls

A. In accordance with T.S.6.8.D.2, the concentration of liquid radioactive material released from the site (Figure 1) ***SHALL*** be limited to ten times the concentration values specified in Appendix B, Table 2, Column 2 of 10CFR20.1001-20.2402 for radionuclides other than dissolved or entrained noble gases. For dissolved or entrained noble gases, the concentration ***SHALL*** be limited to 2×10^{-4} μCi/ml total activity.

2.1.2 Applicability

At all times.

2.1.3 Action

A. When the concentration of radioactive material in liquid released from the site exceeds the above limits, immediately restore the concentration within acceptable limits.

B. Radioactive material in liquid effluent released from the site ***SHALL*** be continuously monitored in accordance with Table 3.

C. The liquid effluent monitors having provisions for automatic alarms as listed in Table 3 ***SHALL*** be used to limit the concentration of radioactive material released at any time from the site to the values given in 2.1.1.A. Setpoints ***SHALL*** be determined in accordance with the methods in Section 4.0 of the ODCM.

D. Report all deviations in the Annual Radioactive Effluent Release Report.

2.1.4 Surveillance Requirements

A. Radioactive liquid wastes **SHALL** be sampled and analyzed according to the sampling and analysis program of Table 2.

B. The results of radioactive analysis **SHALL** be used in accordance with the methods of the ODCM to assure that the concentrations at the point of release are maintained within the limits of Control 2.1.1.A.

C. Liquid effluent monitoring instrumentation surveillance ***SHALL*** be performed as required by Table 1.

2.2 Dose

2.2.1 Controls

A. In accordance with T.S.6.8.D.4, the dose or dose commitment to a MEMBER OF THE PUBLIC from radioactive materials in liquid effluents released from the site ***SHALL*** be limited:

1. During any calendar quarter to ≤1.5 mrem to the total body and to ≤5 mrem to any organ, and

2. During any calendar year to ≤3 mrem to the total body and to ≤10 mrem to any organ.

2.2.2 Applicability

At all times.

2.2.3 Action

A. With the calculated dose from the release of radioactive materials in liquid effluents exceeding any of the above limits, in lieu of a Licensee Event Report, prepare and submit to the Commission within 30 days a Special Report that includes the following information:

1. Identifies the cause(s) for exceeding the limit(s).

2. Defines the corrective actions taken to reduce the release.

3. Defines the corrective actions to be taken to assure that subsequent releases will be in compliance with the above limits.

2.2.4 Surveillance Requirements

A. Cumulative dose contributions for the current calendar quarter and current calendar year ***SHALL*** be determined monthly in accordance with the ODCM.

2.3 Liquid Radwaste Treatment Systems

2.3.1 Controls

A. In accordance with T.S.6.8.D.6, the LIQUID RADWASTE TREATMENT SYSTEM ***SHALL*** be used to reduce the radioactive materials in liquid wastes prior to their discharge when the projected doses, due to the liquid effluent from the site would exceed 0.06 mrem to the whole body or 0.2 mrem to any organ when averaged over one month.

2.3.2 Applicability

At all times.

2.3.3 Action

A. With radioactive liquid waste being discharged without treatment and in excess of the above limits, in lieu of a Licensee Event Report, prepare and submit to the Commission within 30 days a Special Report that includes the following information:

1. Identification of the inoperable equipment or subsystems, and the reason for the inoperability.

2. Action(s) to be taken to restore equipment to OPERABLE status, and

3. Summary description of action(s) taken to prevent a recurrence.

2.3.4 Surveillance Requirements

A. Doses due to liquid releases ***SHALL*** be projected at least once each month in accordance with the ODCM.

2.4 Liquid Holdup Tanks

2.4.1 Controls

A. In accordance with T.S.6.8.I.3, the quantity of radioactive material contained in each outside temporary tank ***SHALL*** be limited to $\leq$ 10 curies, excluding tritium and dissolved or entrained gases.

2.4.2 Applicability

At all times.

2.4.3 Action

A. With the quantity of radioactive material contained in any outside temporary tank exceeding the limit in 2.4.1.A. above, immediately suspend all additions of radioactive material to the tank and within 48 hours reduce the tank contents to within the limit.

2.4.4 Surveillance Requirements

A. The quantity of radioactive material contained in each outside temporary tank ***SHALL*** be determined to be within the limit in 2.4.1.A. by analyzing a representative sample of the tank's contents at least weekly when radioactive materials are being added to the tank.

2.5 Bases

2.5.1 Liquid Effluents

A. Concentration

Control 2.1.1.A. is provided to ensure that the concentration of radioactive materials released in liquid waste effluents to Unrestricted Areas will be less than 10 times the concentration values specified in Appendix B, Table 2, Column 2 to 10CFR20.1001-20.2402. The control provides operational flexibility for releasing liquid effluents in concentrations to follow the Section II.A and II.C design objectives of Appendix I to 10CFR Part 50. This limitation provides reasonable assurance that the levels of radioactive materials in bodies of water in Unrestricted Areas will result in exposures within (1) the Section II.A design objectives of Appendix I, 10CFR Part 50, to a Member of the Public and (2) restrictions authorized by 10CFR20.1301(e). The concentration limit for the dissolved or entrained noble gases is based upon the assumption that Xe-135 is the controlling radionuclide and its effluent concentration in air (submersion) was converted to an equivalent concentration in water. This control does not affect the requirement to comply with the annual limitations of 10CFR20.1301(a).

B. Dose

Control 2.2.1.A. is provided to implement the requirements of Sections II.A, III.A and IV.A of Appendix I, 10CFR Part 50. Action required by Control 2.2.1 provides the required operating flexibility and at the same time implements the guides set forth in Section IV.A of Appendix I to assure that the releases of radioactive material in liquid effluents will be kept "as low as is reasonably achievable". Considering that the nearest drinking water supply using the receiving water is 33 river miles downstream, there is reasonable assurance that the operation of the facility will not result in radionuclide concentrations in the finished drinking water that are in excess of the requirements of 40CFR141.

The dose calculations in the ODCM implement the requirements in Section III.A of Appendix I that conformance with the guides of Appendix I be shown by calculational procedures based on models and data such that the actual exposure of an individual through appropriate pathways is unlikely to be substantially underestimated. The equations specified in the ODCM for calculating the doses due to the actual release rates of radioactive materials in liquid effluents will be consistent with the methodology provided in Regulatory Guide 1.109, "Calculation of Annual Doses to Man from Routine Releases of Reactor Effluents for the Purpose of Evaluating Compliance with

10CFR50, Appendix I," Revision 1, October 1977 and Regulatory Guide 1.113, "Estimating Aquatic Dispersion of Effluents from Accidental and Routine Reactor Releases for the Purpose of Implementing Appendix I, Revision 1," April 1977. NUREG-0133, October 1978 provides methods for dose calculations consistent with Regulatory Guides 1.109 and 1.113.

C. Liquid Radwaste Treatment Systems

Control 2.3.1.A. provides assurance that the liquid radwaste treatment system will be available for use whenever liquid effluents require treatment prior to release to the environment. The requirements that the appropriate portions of this system be used when specified provides assurance that the releases of radioactive materials in liquid effluents will be kept "as low as is reasonably achievable". This control implements the requirements of 10CFR Part 50.36a, General Design Criterion 60 of Appendix A to 10CFR Part 50 and design objective Section II.D of Appendix I to 10CFR Part 50. The specified limits governing the use of appropriate portions of the liquid radwaste treatment system were specified as a suitable fraction of the guide set forth in Section II.A of Appendix I, 10CFR Part 50, for liquid effluents.

The radioactive liquid effluent monitoring instrumentation is provided to monitor and control, as applicable, the releases of radioactive materials in liquid effluents during actual or potential releases of liquid effluents. The Alarm/Trip Setpoint for these instruments **SHALL** be calculated and adjusted in accordance with the methodologies and parameters in the ODCM to ensure that the alarm/trip will occur prior to exceeding the limits of 10CFR Part 20. The OPERABILITY and use of this instrumentation is consistent with the requirements of General Design Criteria 60, 63, and 64 of Appendix A to 10CFR Part 50.

D. Liquid Holdup Tanks

Restrictions on the quantity of radioactive liquid material contained in tanks are required only for temporary tanks. All exterior permanent tanks are diked to prevent release of their contents in the event of leakage. Restricting the quantity of radioactive material contained in the specified tanks provides assurance that in the event of an uncontrolled release of the tanks contents, the resulting concentrations would be less than the values given in Appendix B, Table 2, Column 2, to 10CFR20.1001-20.2402 at the nearest potable water supply and the nearest surface water supply in an unrestricted area.

Surveillance requirements for continuous liquid release points are not provided since all Monticello releases are "batch" type releases.

Radioactive liquid effluent instrumentation is provided to monitor and control, as applicable, the releases of radioactive materials in liquid effluents during actual or potential releases of liquid effluents. The alarm setpoints for these instruments will be calculated in accordance with NRC approved methods in the ODCM to ensure that the alarm will occur prior to exceeding the limits of 10CFR20. The operability requirements for instrumentation are consistent with the requirements of General Design Criteria 60, 63, and 64 of Appendix A to 10CFR Part 50.

Figure 1 Monticello Nuclear Generating Plant Site Boundary for Liquid Effluents

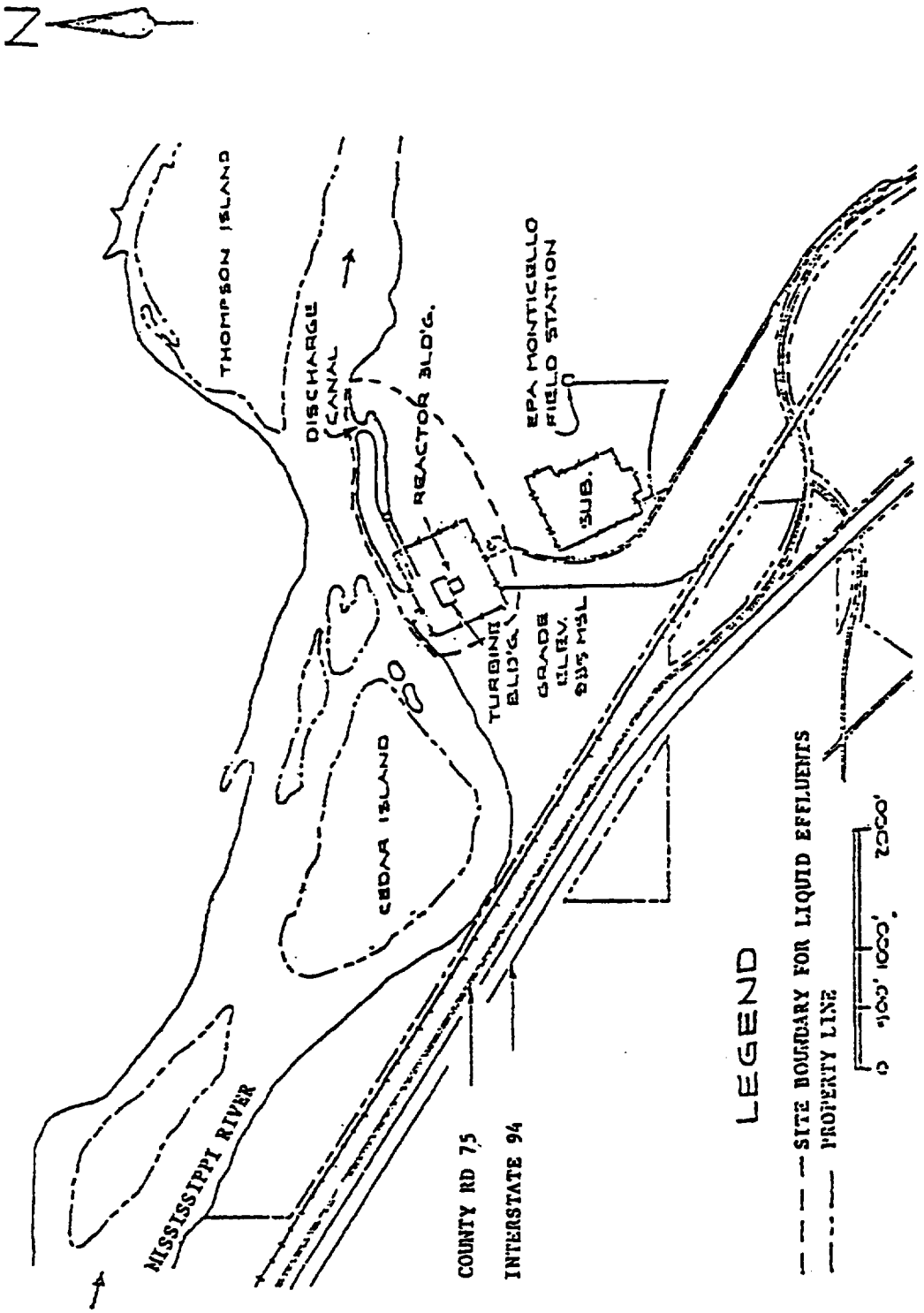

Table 1 Radioactive Liquid Effluent Monitoring Instrumentation Surveillance Requirements

Instrument	Sensor Check Frequency	Source Check Frequency	Functional Test Frequency	Calibration Frequency
Liquid Radwaste Effluent Line Gross Radioactivity Monitor	Daily during release	Immediately Prior to Each Release	Within 3 months prior to making a release	Within12 months prior to making a release.*
Liquid Radwaste Effluent Line Flow Instrument	Daily during release	-	Within 3 months prior to making a release	Within 12 months prior to making a release.
Instruments used in Determination of Discharge Canal Flow	Daily during release	-	Within 3 months prior to making a release	Within 18 months prior to making a release.
Service Water Discharge Pipe Gross Radioactivity Monitor	Daily	Monthly	Quarterly	Each Operating Cycle*
Discharge Canal Gross Radioactivity Monitor	Daily	Monthly	Quarterly	Each Operating Cycle **
Turbine Building Normal Drain Sump Monitor	Daily	Monthly	Quarterly	Each Operating Cycle
Level Monitors for Temporary Outdoor Tanks Holding Radioactive Liquid	Daily when in use	-	Quarterly when in use	Each Operating Cycle when in use

* - The initial Instrument Calibration ***SHALL*** be performed using one or more of the reference standards certified by the National Bureau of Standards (NBS) or using sources traceable to NBS standards. These standards ***SHALL*** permit calibrating the system over its intended range of energy and measurement range. For subsequent calibration sources that have been related to the initial calibration ***SHALL*** be used.

** - An initial Instrument Calibration was performed using a liquid reference standard over the systems intended range of energy and measurement range. Solid calibration sources traceable to NBS Standards currently being applied for instrument calibrations were related to the initial calibration. If, in the future, the canal radioactivity monitor is replaced, the following conditions ***SHALL*** apply:

a. Detector response and system efficiency ***SHALL*** be equal to or better than the present system.

b. Footnote (*) ***SHALL*** apply

Table 2 Radioactive Liquid Waste Sampling And Analysis Program

Liquid Release Type	Sampling Frequency	Minimum Analysis Frequency	Type of Activity Analysis	Lower Limit of Detection (LLD) (uci/ml)[a,e]
Batch Waste Release Tanks[b]	Each Batch	Each Batch	Principal Gamma Emitters[d]	5×10^{-7}
			I-131	1×10^{-6}
	One Batch Each Month	One Batch Each Month	Dissolved and Entrained Gases	1×10^{-5}
	Each Batch	Monthly Composite[c]	H-3	1×10^{-5}
			Gross alpha	1×10^{-7}
	Each Batch	Quarterly Composite[c]	Sr-89, Sr-90	5×10^{-8}
			Fe-55	1×10^{-6}

Table 2 Radioactive Liquid Waste Sampling And Analysis Program (cont'd)

Notes

a. The LLD is the smallest concentration of radioactive material in a sample that will be detected with 95% probability with 5% probability of falsely concluding that a blank observation represents a "real" signal.

For a particular measurement system (which may include radiochemical separation):

$$LLD = \frac{4.66\, s_b}{E \cdot V \cdot 2.22 \cdot Y \cdot \exp(-\lambda \Delta t)}$$

where:

LLD is the a priori lower limit of detection as defined above (as picocurie per unit mass or volume),

s_b is the standard deviation of the background counting rate or of the counting rate of a blank sample as appropriate (as counts per minute). Typical values of E, V, Y and Δt ***SHALL*** be used in the calculations.

E is the counting efficiency (as counts per transformation),

V is the sample size (in units of mass or volume),

2.22 is the number of transformations per minute per picocurie,

Y is the fractional radiochemical yield (when applicable),

λ is the radioactive decay constant for the particular radionuclide, and

Δt is the elapsed time between midpoint of sample collection and time of counting.

Table 2 Radioactive Liquid Waste Sampling And Analysis Program (cont'd)

b. A batch release is the discharge of liquid wastes of a discrete volume. Prior to sampling for analyses, each batch ***SHALL*** be isolated and then thoroughly mixed to assure representative sampling.

c. A composite sample is one in which the quantity of liquid sampled is proportional to the quantity of liquid waste discharged and in which the method of sampling employed results in a specimen which is representative of the liquids released.

d. The principle gamma emitters for which the LLD specification will apply are exclusively the following radionuclides: Mn-54, Fe-59, Co-58, Co-60, Zn-65, Mo-99, Cs-134, Cs-137, Ce-141, and Ce-144. This list does not mean that only these nuclides are to be detected and reported. Other peaks which are measurable and identifiable, together with the above nuclides, ***SHALL*** also be identified and reported.

e. Nuclides which are below the LLD for the analyses ***SHALL*** be reported as "less than" the LLD of the nuclide and should not be reported as being present at the LLD level for that nuclide. The "less than" values ***SHALL*** not be used in the required dose calculations. When unusual circumstances result in LLDs higher than required, the reasons ***SHALL*** be documented in the Radioactive Effluent Release Report.

Table 3 Radioactive Liquid Effluent Monitoring Instrumentation

Instrument	Minimum Channels Operable	Applicability	Action if Minimum Channels not operable
Liquid Radwaste Effluent Line Gross Radioactivity Monitor	1	During Release of Liquid Radwaste	Liquid radwaste releases may continue for up to 14 days provided that prior to initiating a release: a. At least two independent samples are analyzed in accordance with Table 2. b. At least two technically qualified members of the Facility Staff independently verify the release rate calculations and discharge line valving; Otherwise, suspend release of radioactive effluents via this pathway.
Liquid Radwaste Effluent Flow Instrument	1	During Release of Liquid Radwaste	Liquid radwaste releases via this pathway may continue for up to 30 days provided the flow rate is estimated at least every four hours during actual releases. Pump curves may be used to estimate flow.
Discharge Canal Flow Measurement: - Open Cycle Mode - Closed/Helper Cycle Mode	 1 1	During Release of Liquid Radwaste	Effluent releases via this pathway may continue for up to 30 days provided the flow rate is estimated at least once every four hours during actual releases. Pump curves may be used to estimate flow.
Discharge Canal Gross Radioactivity Monitor*	1	At all times	Effluent releases may continue for up to 30 days provided that at least once every 8 hours a grab sample ***SHALL*** be collected and analyzed for gross beta at an LLD of 10^{-7} μCi/ml or gamma isotopic for principle gamma emitters at an LLD of 5.0×10^{-7} μCi/ml.

* - Indicates monitor provided with automatic alarm.

Table 3 Radioactive Liquid Effluent Monitoring Instrumentation (cont'd)

Instrument	Minimum Channels Operable	Applicability	Action if Minimum Channels not operable
Service Water Discharge Pipe Gross Radioactivity Monitor*	1	At all times	Service water discharge may continue for up to 30 days provided that at least once every 8 hours a grab sample ***SHALL*** be collected and analyzed for gross beta at an LLD of 10^{-7} µCi/ml or gamma isotopic for principle gamma emitters at an LLD of 5.0×10^{-7} µCi/ml.
Turbine Building Normal Sump Monitor*	1	At all times	Liquid sump releases may continue for up to 30 days provided that at least once every 8 hours a grab sample ***SHALL*** be collected and analyzed for gross beta at an LLD of 10^{-7} µCi/ml or gamma isotopic for principle gamma emitters at an LLD of 5.0×10^{-7} µCi/ml.
Level Monitors for Temporary Outdoor Tanks Holding Radioactive Liquid	1	When tanks are in use	Liquid additions to a tank may continue for up to 30 days provided the tank level is estimated during all liquid additions.

* - Indicates monitor provided with automatic alarm.

OFFSITE DOSE CALCULATION MANUAL - TABLE OF CONTENTS

SECTION		PAGE
1.0	RECORD OF REVISION	2
2.0	GASEOUS EFFLUENTS	3
2.1	Dose Rate	3
2.2	Dose - Noble Gases	4
2.3	Dose - Iodine-131, Iodine-133, Tritium and Particulates	5
2.4	Off-gas Treatment System	6
2.5	Main Condenser Offgas Activity	7
2.6	Containment Venting and Purging	8
2.7	Bases	9
Figure 1	Monticello Nuclear Generating Plant Site Boundary for Gaseous Effluents	12
Table 1	Radioactive Gaseous Effluent Monitoring Instrumentation Surveillance Requirements	13
Table 2	Radioactive Gaseous Waste Sampling and Analysis Program	14
Table 3	Radioactive Gaseous Effluent Monitoring Instrumentation	16

Prepared By: B Peterson	
Reviewed By:	
OC Final Review Meeting: # 2242	Date: 11/02/2000
Approved By Plant Manager:	Date:

*This is a major rewrite, therefore, no sidelines are required.

3087 (DOCUMENT CHANGE, HOLD, AND COMMENT FORM) incorporated: 97-0538			
Resp Supv: S CHEM	Assoc Ref: CHEM-I	SR: N	Freq: 2 yrs
ARMS: ODCM-03.01	Doc Type: 7030	Admin Initials:	Date:

l/plr

1.0 RECORD OF REVISION

Revision No.	Date	Reason for Revision
1	August - 1995	Page 3 of 23, 2nd paragraph - Changed "In addition, prior to containment purge and venting," to "In addition, prior to containment purging". This change was made because setpoint recalculation is required only for containment purging and to be consistent with the rest of the ODCM. Page 3 of 23, first paragraph - Changed "Reactor Building Vent Plenum Monitor which initiates isolation of Reactor Building releases" to "Reactor Building Vent Noble Gas Monitor". This change was made to differentiate the noble gas monitor from the plenum radiation monitor and because the isolation function has been removed from the noble gas monitor system. Page 3 of 23, section 1.1.1 - Changed "Reactor Building Vent Isolation Setpoint" to"Reactor Building Vent Alarm Setpoint". This change was made because the setpoint exceedance no longer causes the Reactor Building Vent to isolate. Page 4 of 23, Section 1.1.1.B - Changed "For purge releases, substitute (x/q)v, the highest short term dispersion factor from Table A-12" to "For purge releases, substitute the value obtained from Chemistry Manual Procedure I.06.07 (ATMOSPHERIC DISPERSION DETERMINATION). This change was made to more accurately predict off-site dose from containment purging by using near real time actual dispersion values.
2	October - 2000	Incorporated Radiological Effluents Tech Specs section 3.8.B and 4.8.B into document.

2.0 GASEOUS EFFLUENTS

2.1 Dose Rate

2.1.1 Controls

A. In accordance with T.S.6.8.D.7, the dose rate due to radioactive materials released in gaseous effluents from the site (Figure 1) ***SHALL*** be limited to the following:

1. For Noble Gases: Less than or equal to a dose rate of 500 mrem/yr to the total body and less than or equal to a dose rate of 3000 mrem/yr to the skin, and

2. For Iodine-131, Iodine-133, Tritium, and for all radionuclides in particulate form with half-lives greater than 8 days: Less than or equal to a dose rate of 1500 mrem/yr to any organ.

2.1.2 Applicability

At all times.

2.1.3 Action

A. With the dose rate(s) exceeding the above limits, immediately decrease the release rate to within acceptable limits(s).

B. Radioactive material in gaseous effluents released from the site ***SHALL*** be continuously monitored in accordance with Table 3.

C. The Noble Gas Effluent monitors having provisions for the automatic termination of gaseous releases, as listed in Table 3 ***SHALL*** be used to limit offsite dose rates to the values established in 2.1.1.A.1. Setpoints ***SHALL*** be determined in accordance with the ODCM.

2.1.4 Surveillance Requirements

A. Gaseous effluent monitoring instrument surveillance ***SHALL*** be performed as required by Table 1.

B. The release rate due to Iodine-131, Iodine-133, Tritium, and Radioactive Particulates with half-lives greater than 8 days ***SHALL*** be determined by obtaining representative samples and performing analysis in accordance with the sampling and analysis program specified in Table 2. Following each analysis, the dose rate due to I-131, I-33, Tritium and Radioactive Particulates with half-lives greater than 8 days, ***SHALL*** be determined to be less than the limit in 2.1.1.A.2. in accordance with the ODCM.

2.2 Dose - Noble Gases

2.2.1 Controls

A. In accordance with T.S.6.8.D.8, the air dose due to noble gases released in gaseous effluents from the site (Figure 1) ***SHALL*** be limited to the following values:

1. During any calendar quarter: $\leq$5 mrad for gamma radiation and $\leq$10 mrad for beta radiation, and

2. During any calendar year: $\leq$10 mrad for gamma radiation and $\leq$20 mrad for beta radiation.

2.2.2 Applicability

At all times.

2.2.3 Action

A. With the calculated air dose from radioactive noble gases in gaseous effluent exceeding any of the above limits, in lieu of a Licensee Event Report, prepare and submit to the Commission within 30 days a Special Report that includes the following:

1. Identifies the cause(s) for exceeding the limit(s).

2. Defines the corrective actions taken to reduce the release.

3. Defines the proposed corrective actions to be taken to assure that subsequent releases will be within the above limits.

2.2.4 Surveillance Requirements

A. Cumulative dose contributions for the current calendar quarter and current calendar year from noble gases in gaseous effluents ***SHALL*** be determined monthly in accordance with the ODCM.

2.3 Dose - Iodine-131, Iodine-133, Tritium and Particulates

2.3.1 Controls

A. In accordance with T.S.6.8.D.9, the dose to any organ of an individual due to Iodine-131, Iodine-133, Tritium, and radioactive particulates with a half-life greater than 8 days released from the site (FIGURE 1) in gaseous effluent **SHALL** be limited to the following:

1. During any calendar quarter: $\leq$7.5 mrem, and

2. During any calendar year: $\leq$15 mrem.

2.3.2 Applicability

At all times.

2.3.3 Action

A. With the calculated dose from the release of Iodine-131, Iodine-133, Tritium, and Radioactive Particulates with half-lives greater than 8 days, exceeding any of the above limits, in lieu of a Licensee Event Report, prepare and submit to the Commission within 30 days a Special Report that includes the following:

1. Identifies the cause(s) for exceeding the limit(s).

2. Defines the corrective actions taken to reduce the release.

3. Defines the proposed corrective actions to be taken to assure that the subsequent releases will be within the above limits.

2.3.4 Surveillance Requirements

A. Cumulative dose contributions for the current calendar quarter and current calendar year for Iodine-131, Iodine-133, Tritium, and Radioactive Particulates with half-lives greater than 8 days in gaseous effluents ***SHALL*** be determined in accordance with the ODCM monthly.

2.4 Offgas Treatment System

2.4.1 Controls

A. In accordance with T.S.6.8.D.6, the OFFGAS TREATMENT SYSTEM ***SHALL*** be in operation whenever the Main Condenser Air Ejector system is in operation. Components of the system ***SHALL*** be operated to provide the maximum holdup time obtainable except during periods of equipment maintenance.

B. The quantity of radioactivity after 12 hours holdup contained in each gas storage tank ***SHALL*** be limited to ≤22,000 curies of noble gases (considered as dose equivalent Xe-133).

C. The concentration of hydrogen in the compressed storage subsystem ***SHALL*** be limited to ≤2% by volume. With the concentration of hydrogen >2% by volume, but ≤4% by volume, restore the concentration of hydrogen to <2% by volume within 48 hours or suspend operation of the compressed storage subsystem.

D. The hydrogen monitors ***SHALL*** be operable as specified in Table 3 and set to automatically trip the offgas compressors at ≤4% hydrogen by volume.

2.4.2 Applicability

At all times.

2.4.3 Action

A. With gaseous waste being discharged for more than seven (7) days with a holdup time of less than 50 hours, in lieu of a licensee event report, prepare and submit to the Commission within 30 days, a special report which includes the following:

1. Identification of equipment or subsystems not functional and the reason.

2. Action(s) taken to restore equipment to functional status, and

3. Summary description of action(s) taken to prevent a recurrence.

2.4.4 Surveillance Requirements

A. Following each isotopic analysis of a sample of gases from the Steam Jet Air Ejector required by 2.5.1, verify that the maximum storage tank activity limit specific in 2.4.1.B. cannot be exceeded using the method in the ODCM.

2.5 Main Condenser Offgas Activity

2.5.1 Controls

A. In accordance with T.S.3.8.A.1, the gross gamma radioactivity release rate measured at the steam jet air ejector ***SHALL*** be limited to $\leq 2.6 \times 10^5$ μCi/sec following a 30 minute decay.

B. In accordance with T.S.3.8.A.3, the activity of radioactive material in gaseous form removed from the main condenser ***SHALL*** be continuously monitored by the steam jet air ejector monitors in accordance with Table 3.

C. In accordance with T.S.3.8.A.4, the steam jet air ejector monitors ***SHALL*** be set to automatically terminate offgas flow within 30 minutes at the limit established in Control 2.5.1.A.

2.5.2 Applicability

At all times

2.5.3 Action

A. When the limit in 2.5.1.A. is exceeded, restore the gross gamma radioactivity release rate to within the limit within 72 hours or be in at least hot shutdown within the next 12 hours.

2.5.4 Surveillance Requirements

A. The gross gamma radioactivity of noble gases from the main condenser air ejector ***SHALL*** be determined to be within the limit specified in 2.5.1.A. at the following times by performing an isotopic analysis of a representative sample of gases:

1. Once every month

2. Within 24 hours following an increase in the continuous monitor reading of 50% after factoring out increases due to power level.

2.6 Containment Venting and Purging

2.6.1 Controls

A. In accordance with T.S.6.8.D.11 and 3.7.A.5.C, except for inerting operations following startup and deinerting prior to shutdown, containment venting and purging above cold shutdown ***SHALL*** be via the 2-inch bypass flow path using the Standby Gas Treatment System.

B. In accordance with T.S.6.8.D.11, Containment inerting following startup and deinerting prior to shutdown ***SHALL*** be via the Reactor Building plenum and vent.

2.6.2 Applicability

At all times.

2.6.3 Action

None

2.6.4 Surveillance Requirements

A. Except for inerting operations following startup and deinerting prior to shutdown, the containment ***SHALL*** be determined to be aligned for venting or purging through the Standby Gas Treatment System within four (4) hours prior to start of and at least once per 12 hours during venting or purging of the containment above cold shutdown.

B. Prior to containment purging, the sampling and analysis requirements of Table 2 ***SHALL*** be met.

2.7 Bases

2.7.1 Gaseous Effluents

A. Dose Rate

Control 2.1.1.A. provides reasonable assurance that radioactive material discharged in gaseous effluents will not result in the exposure of a Member of the Public in an Unrestricted Area, either at or beyond the Site Boundary in excess of the design objectives of Appendix I to 10CFR Part 50. This specification is provided to ensure that gaseous effluents from all units on the site will be appropriately controlled. It provides operational flexibility for releasing gaseous effluents to satisfy the Section II.A and II.C design objectives of Appendix I to 10CFR Part 50. For Members of the Public who may at times be within the Site Boundary, the occupancy of that Member of the Public will usually be sufficiently low to compensate for the reduced atmospheric dispersion of gaseous effluents relative to that for the Site Boundary. The specified release rate limits restrict, at all times, the corresponding dose rates above background to a Member of the Public at or beyond the Site Boundary to less than or equal to 500 mrem/year to the total body or to less than or equal to 3000 mrem/year to the skin. These release rate limits also restrict, at all times, the corresponding thyroid dose rate above background to a child via the inhalation pathway to less than or equal to 1500 mrem/year. This specification does not affect the requirement to comply with the annual limitations of 10CFR20.1301(a).

B. Dose From Noble Gas

Control 2.2.1.A. is provided to implement the requirements of Sections II.B, III.A and IV.A of Appendix I, 10CFR Part 50. Action required by Control 2.2.1 provides the required operating flexibility and at the same time implements the guides set forth in Section IV.A of Appendix I to assure that the releases of radioactive material in gaseous effluents will be kept "as low as reasonably achievable".

The Surveillance Requirements implement the requirements in Section III.A of Appendix I that conformance with the guides of Appendix I is to be shown by calculational procedures based on models and data such that the actual exposure of an individual through the appropriate pathways is unlikely to be substantially underestimated. The dose calculations established in the ODCM for calculating the doses due to the actual release rates of radioactive noble gases in gaseous effluents will be consistent with the methodology provided in Regulatory Guide 1.109, "Calculation of Annual Doses to Man from Routine Releases of Reactor Effluents for the Purpose of Evaluating Compliance with

10CFR Part 50, Appendix I," Revision 1, October 1977 and Regulatory Guide 1.111, "Methods for Estimating Atmospheric Transport and Dispersion of Gaseous Effluents in Routine Releases from Light-Water-Cooled Reactors," Revision 1, July 1977. The ODCM equations provided for determining the air doses at the restricted area boundary may be based upon the historical average atmospheric conditions. NUREG-0133, October, 1978 provides methods for dose calculations with Regulatory Guides 1.109 and 1.111.

C. Dose From Iodine 131, Iodine 133, Tritium & Particulates

Control 2.3.1.A. is provided to implement the requirements of Section II.C, III.A and IV.A of Appendix I, 10CFR Part 50. The release rate specifications for I-131, I-133, tritium and radioactive particulates with half-lives greater than eight days are dependent on the existing radionuclide pathways to man in the Unrestricted Area. The pathways which are examined in the development of these calculations are: 1) individual inhalation of airborne radionuclides, 2) deposition of radionuclides onto green leafy vegetation with subsequent consumption by man, 3) deposition onto grassy areas where milk animals and meat producing animals graze with consumption of the milk and meat by man, and 4) deposition on the ground with subsequent exposure of man.

D. Offgas Treatment Systems

Control 2.4.1.A. provides assurance that the Offgas Treatment System will be in operation whenever main condenser offgas is released to the environment. The requirement that the appropriate portions of this system be used when specified provides reasonable assurance that the releases of radioactive materials in gaseous effluents will be kept "as low as is reasonably achievable". This specification implements the requirements of 10CFR50.36a, General Design Criterion 60 of Appendix A to 10CFR Part 50, and design objective Section II.D of Appendix I to 10CFR Part 50. The specified limits governing the use of appropriate portions of the systems were specified as a suitable fraction of the guide set forth in Sections II.B and II.C of Appendix I, 10CFR Part 50, for gaseous effluents.

Control 2.4.1.B. is provided to limit the radioactivity which can be stored in one decay tank. Restricting the quantity of radioactivity contained in each gas storage tank provides assurance that in the event of an uncontrolled release of the tank's contents, the resulting total body exposure to an individual at the site Restricted Area Boundary will not exceed 20 mrem. A flow restrictor in the discharge line of the decay tanks prevents a tank from being discharged at an uncontrolled rate. In addition, interlocks prevent the contents of a tank from being released with less than 12 hours of holdup.

The radioactive gaseous effluent monitoring instrumentation is provided to monitor and control, as applicable, the releases of radioactive materials in gaseous effluents during actual or potential releases of gaseous effluents. The Alarm/Trip Setpoint for these instruments will be calculated in accordance with NRC approved methods in the ODCM to ensure that the alarm/trip will occur prior to exceeding the limits of 10CFR Part 20. The OPERABILITY requirements for this instrumentation are consistent with the requirements of General Design Criteria 60, 63, and 64 of Appendix A to 10CFR Part 50.

E. Main Condenser Offgas Activity

Control 2.5.1.A. establishes a maximum activity at the steam jet air ejector. Restricting the gross radioactivity rate of noble gases from the main condenser provides reasonable assurance that the total body exposure to an individual at the restricted area boundary will not exceed the limits of 10CFR Part 20 in the event this effluent is inadvertently discharged directly to the environment with minimal treatment. This control implements the requirements of General Design Criteria 60 and 64 of Appendix A to 10CFR Part 50.

F. Containment Venting and Purging

Control 2.6.1 requires the containment to be purged and vented through the standby gas treatment system except during inerting and deinerting operations. This provides for iodine and particulate removal from the containment atmosphere. During outages when the containment is opened for maintenance, the containment ventilation exhaust is directed to the monitored reactor building vent. Use of the 2 inch flow path prevents damage to the standby gas treatment system in the event of a loss of coolant accident during purging or venting. Use of the reactor building plenum and vent flow path for inerting and deinerting operations permits the control room operators to monitor the activity level of the resulting effluent by use of the Reactor Building Vent Wide Range Gas Monitors. In the event that the Reactor Building release rate exceeds the Reactor Building Vent Wide Range Gas Monitor alarm settings, the monitors will alarm in the Control Room alerting the operators to take actions to limit the release of gaseous radioactive effluents. The alarm settings for the Reactor Building Vent Wide Range Gas Monitors are calculated in accordance with the NRC approved methods in the ODCM to ensure that alarms will alert Control Room Operators prior to the limits of 10CFR Part 20 being exceeded.

Figure 1 Monticello Nuclear Generating Plant Site Boundary for Gaseous Effluents

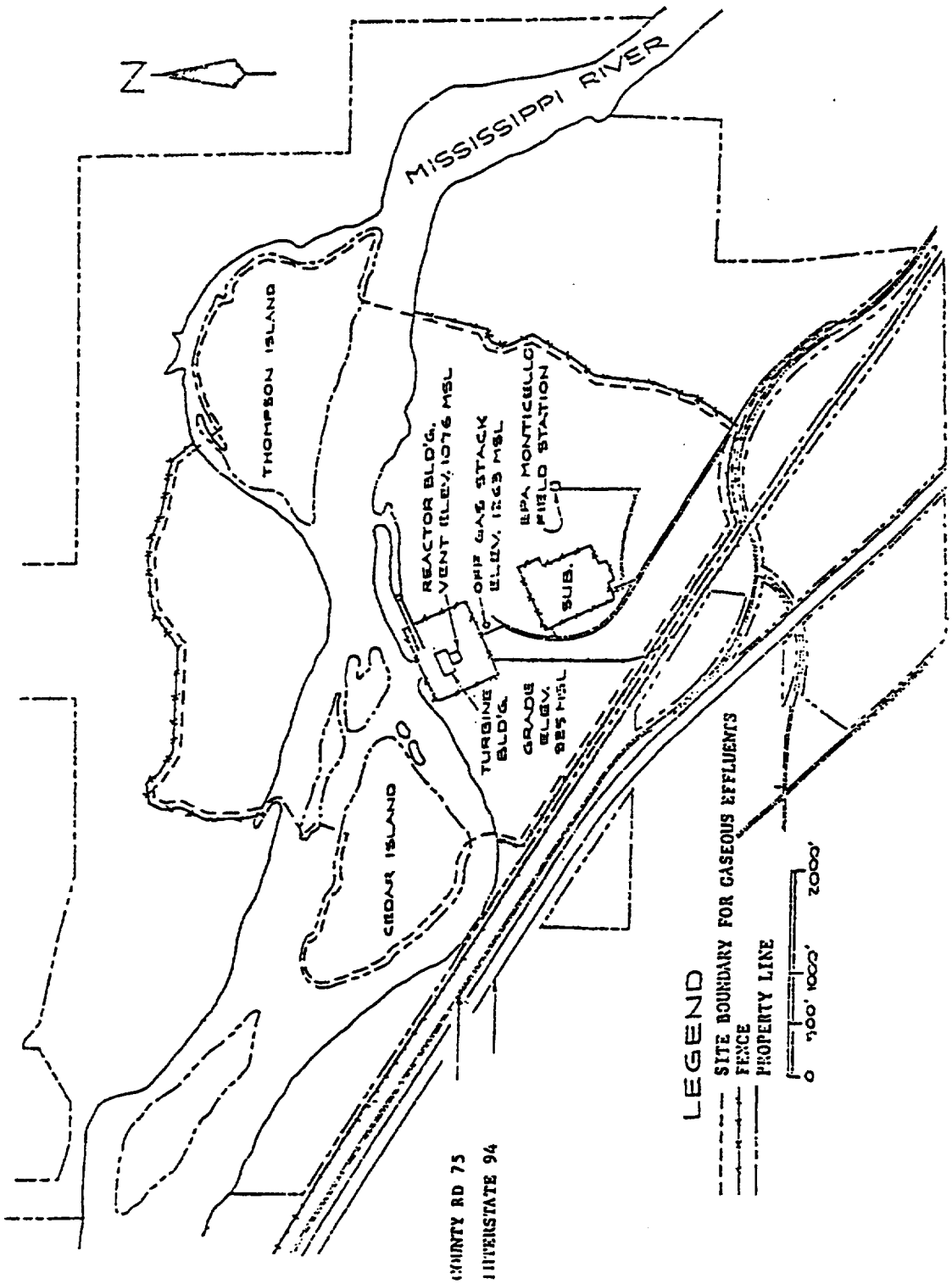

Table 1 Radioactive Gaseous Effluent Monitoring Instrumentation Surveillance Requirements

Instrument	Sensor Check Frequency	Source Check Frequency	Functional Test Frequency	Calibration Frequency
Main Condenser Air Ejector Noble Gas Activity Monitors	Daily during air ejector operation		Quarterly	Once each Operating Cycle
Main Condenser Offgas Treatment System Hydrogen Monitors	Daily during air ejector operation		Monthly	Quarterly#
Plant Stack Wide Range Noble Gas Activity Monitors	Daily	Monthly	Quarterly	Once each Operating Cycle*
Plant Stack Iodine and Particulate Samplers	Weekly			
Plant Stack Flow Monitor	Daily			Once each Operating Cycle
Plant Stack Sample Flow Instruments	Daily			Once each Operating Cycle
Reactor Building Vent Wide Range Noble Gas Activity Monitors	Daily	Monthly	Quarterly	Once each Operating Cycle*
Reactor Building Vent Iodine and Particulate Samplers	Weekly			
Reactor Building Vent Duct Flow Monitors	Daily			Once each Operating Cycle
Reactor Building Vent Sample Flow Instruments	Daily			Once each Operating Cycle

* - The initial Instrument Calibration ***SHALL*** be performed using one or more of the reference standards certified by the National Bureau of Standards (NBS) or using sources traceable to NBS standards. These standards ***SHALL*** permit calibrating the system over its intended range of energy and measurement range. For subsequent calibration sources that have been related to the initial calibration ***SHALL*** be used.

\# - The Calibration ***SHALL*** include the use of standard gas samples containing a nominal four volume percent hydrogen.

Table 2 Radioactive Gaseous Waste Sampling and Analysis Program

Gaseous Release Type	Sampling Frequency	Minimum Analysis Frequency	Type of Activity Analysis	Lower Limit of Detection (LLD) (uci/ml)[a,e,f]
Containment Purge	Each Purge Grab Sample	Each Purge	Principal Gamma Emitters(f)	1×10^{-4}
			H-3[h]	1×10^{-6}
Plant Stack and Reactor Building Vent	Monthly[b] Grab Sample	Monthly	Principal Gamma Emitters(f)	1×10^{-4}
			H-3[i]	1×10^{-6}
	Continuous[g]	Weekly[c] Charcoal Sample	I-131 I-133	1×10^{-12} 1×10^{-10}
	Continuous[g]	Weekly[c] Particulate Sample	Principal Gamma Emitters (I-131, Others)	1×10^{-11}
	Continuous[g]	Monthly[d] Composite Particulate Sample	Gross alpha	1×10^{-11}
	Continuous[g]	Quarterly[d] Composite Particulate Sample	Sr-89, Sr-90	1×10^{-11}
	Continuous[g]	Composite monitor	Gross gamma or gross beta noble gas activity	1×10^{-6}

Table 2 Radioactive Gaseous Waste Sampling and Analysis Program (cont'd)

Notes

a. The LLD is the smallest concentration of radioactive material in a sample that will be detected with 95% probability with 5% probability of falsely concluding that a blank observation represents a "real" signal. Note (a) of Table 2 is applicable.

b. Grab samples taken at the discharge of the plant stack and Reactor Building vent are generally below minimum detectable levels for most nuclides with existing analytical equipment. For this reason, isotopic analysis data, corrected for holdup time, for samples taken at the steam jet air ejector may be used to calculate noble gas ratios.

c. Whenever the steady state radioiodine concentration is greater than 10 percent of the limit of Specification 3.6.C.1, daily sampling of reactor coolant for radioactive iodines of I-131 through I-135 is required. Whenever a change of 25% or more in calculated Dose Equivalent I-131 is detected under these conditions, the iodine and particulate collection devices for all release points ***SHALL*** be removed and analyzed daily until it is shown that a pattern exists which can be used to predict the release rate. Sampling may then revert to weekly. When samples collected for one day are analyzed, the corresponding LLDs may be increased by a factor of 10. Samples ***SHALL*** be analyzed within 48 hours after removal.

d. To be representative of the average quantities and concentrations of radioactive materials in particulate form in gaseous effluents, samples should be collected in proportion to the rate of flow of the effluent streams.

e. The principal gamma emitters for which the LLD specification will apply are exclusively the following radionuclides: Kr-87, Kr-88, Xe-133, Xe-133m, Xe-135, and Xe-138 for gaseous emissions and Mn-54, Fe-59, Co-58, Co-60, Zn-65, Mo-99, Cs-134, Cs-137, Ce-141, and Ce-144 for particulate emissions. This list does not mean that only these nuclides are to be detected and reported. Other peaks which are measurable and identifiable, together with the above nuclides, ***SHALL*** also be identified and reported.

f. Nuclides which are below the LLD for the analyses ***SHALL*** be reported as "less than" the LLD of the nuclide and should not be reported as being present at the LLD level for that nuclide. The "less than" values ***SHALL NOT*** be used in the required dose calculations. When unusual circumstances result in LLDs higher than reported, the reasons ***SHALL*** be documented in the semiannual effluent report.

g. The ratio of the sample flow rate to the sampled stream flow rate ***SHALL*** be known for the time period sampled.

h. H^3 analysis ***SHALL*** not be required prior to purging if the limits of Specification 3.1 are satisfied for other nuclides. However, the H^3 analysis ***SHALL*** be completed within 24 hours after sampling.

i. In lieu of grab samples, continuous monitoring with bi-weekly analysis using silica-gel samplers may be provided.

Table 3 Radioactive Gaseous Effluent Monitoring Instrumentation

Instrument	Minimum Channels Operable	Applicability	Action if Minimum Channels not Operable
Main Condenser Air Ejector Noble Gas Activity Monitor	2	During air ejector operation	From and after the date that one of the two steam jet air ejector offgas radiation monitors is made or found to be inoperable, continued reactor power operation is permissible provided the inoperable radiation monitor instrument channel is tripped. Upon loss of both steam jet air ejector offgas radiation monitors, be in Hot Standby within six hours.
Main Condenser Offgas Treatment System Hydrogen Monitors	2#	During air ejector operation	Operation may continue for up to 14 days with one Operable channel per operating recombiner train. With all channels inoperable, be in Hot Standby within six hours.
Plant Stack			
Wide Range Noble Gas Activity Monitors*	1	At all times	Releases via this pathway may continue for up to 30 days provided grab samples are taken and analyzed at least once every 8 hours.
Iodine Sampler Cartridge	1	At all times	Releases via this pathway may continue for up to 30 days provided within 8 hours samples are continuously collected with auxiliary sampling equipment as required by Table 2.
Particulate Sampler Filter	1	At all times	Releases via this pathway may continue for up to 30 days provided within 8 hours samples are continuously collected with auxiliary sampling equipment as required by Table 2.
Stack Flow Monitor	1	At all times	Releases via the pathway may continue for up to 30 days provided the flow rate is estimated at least once every 4 hours.
Sample Flow Instrument	1	At all times	Releases via the pathway may continue for up to 30 days provided the flow rate is estimated at least once every 4 hours.

Table 3 Radioactive Gaseous Effluent Monitoring Instrumentation (cond't)

Instrument	Minimum Channels Operable	Applicability	Action if Minimum Channels not Operable
Reactor Building Vent (includes Turbine Building & Radwaste Building releases)			
Wide Range Noble Gas Activity Monitors**	1	At all times	Releases via this pathway may continue for up to 30 days provided grab samples are taken and analyzed at least every 8 hours.
Iodine Sampler Cartridge	1	At all times	Releases via this pathway may continue for up to 30 days provided within 8 hours samples are continuously collected with auxiliary sampling equipment as required by Table 2.
Particulate Sampler Cartridge	1	At all times	Releases via this pathway may continue for up to 30 days provided within 8 hours samples are continuously collected with auxiliary sampling equipment as required by Table 2.
Duct Flow Monitors	1	At all times	Releases via the pathway may continue for up to 30 days provided the flow rate is estimated at least once every 4 hours.
Sample Flow Instruments	1	At all times	Releases via the pathway may continue for up to 30 days provided the flow rate is estimated at least once every 4 hours.

Notes:

- Indicates number of channels required per operating recombiner train.

* - Provides automatic termination of offgas treatement system releases.

** - Provides Control Room indication prior to exceeding 10CFR Part 20 release limits.

OFFSITE DOSE CALCULATION MANUAL - TABLE OF CONTENTS

SECTION		PAGE
1.0	RECORD OF REVISION	2
2.0	LIQUID EFFLUENT CALCULATIONS	3
2.1	Monitor Alarm Setpoint Determination	3
2.2	Liquid Effluent Concentration - Compliance With 10CFR20	11
2.3	Liquid Effluent Doses - Compliance With 10CFR50	12
2.4	References	15
Figure 1	Radwaste Clean, Dirty, Solid Waste	16
Table 1	Liquid Source Terms*	17
Table 2	Aij Values for the Monticello Nuclear Generating Plant (mrem/hr per mCi/ml)	18

Prepared By:	
Reviewed By:	
OC Final Review Meeting: # 2242	Date: 11/02/2000
Approved By Plant Manager:	Date:

*This is a major rewrite, therefore, no sidelines are required.

3087 (DOCUMENT CHANGE, HOLD, AND COMMENT FORM) incorporated: 97-0539			
Resp Supv: CHEM	Assoc Ref: CHEM-I	SR: N	Freq: 2 yrs
ARMS: ODCM-04.01	Doc Type: 7030	Admin Initials:	Date:

l/plr

1.0 RECORD OF REVISION

Revision No.	Date	Reason for Revision
1	October - 2000	Moved previous ODCM-02.01 (LIQUID EFFLUENTS) into this section and renamed this section "LIQUID EFFLUENTS CALCULATIONS" to facilitate moving the Radiological Effluents Tech Specs to the ODCM. Removed dilution flow from setpoint calculations for the Service Water and Turbine Normal Drain Monitors to ensure the setpoints are valid for all plant modes. Revised the Table 1 MPC_i values to 10 times the concentration values of 10CFR20.1001-20.2402, Table 2, Column 2.

2.0 LIQUID EFFLUENT CALCULATIONS

It is MNGP's policy to make no routine liquid releases, this section is used to:

A. Determine alarm setpoints for liquid monitors;

B. Determine that liquid concentrations in effluents are below 10 times the allowable concentrations given in 10CFR20;

C. Calculate dose commitments to individuals; and

D. Project doses for the next month due to liquid radioactive effluents.

2.1 Monitor Alarm Setpoint Determination

Monitor alarm setpoints are determined to assure compliance with Tech Specs. The setpoints indicate if the concentration of radionuclides in the liquid effluent at the site boundary exceeds 10 times the concentrations specified in Appendix B, Table 2, Column 2 of 10CFR20.1001-20.2402 for radionuclides other than dissolved or entrained noble gases. The setpoints will also assure that a concentration of 2×10^{-4} μCi/ml for dissolved or entrained noble gases is not exceeded.

Monitor alarm setpoints are calculated monthly. The calculation is performed by the LIQDOS computer program. The calculation is based on radionuclides detected in effluent from the release point during the previous month in the following manner:

A. If there were no detectable radionuclides during the previous month, the BWR GALE Code source terms (Table 1)[2] will be used as the basis for the monthly release rate.

B. If the calculated setpoint is less than the existing monitor setpoint, the setpoint will be reduced to the new lower value.

C. If the calculated setpoint is greater than the existing monitor setpoint, the setpoint may remain at the lower value or be increased to the new value.

2.1.1 Radwaste Discharge Line Monitor

The following method applies to liquid releases from the plant via the discharge canal when determining the high-high alarm setpoint for the Liquid Radwaste Effluent Monitor during all operational conditions. The radwaste discharge flowrate is assumed to be maintained relatively constant at or near the maximum Liquid Radwaste Pump design flowrate. Circulating water is used for dilution because the setpoint is applied at the liquid effluent site boundary (ODCM-02.01, Figure 1).

A. Determine the "mix" (radionuclides and composition) of the liquid effluent.

1. Determine the liquid source terms that are representative of the "mix" of the liquid effluent. Liquid source terms are the total curies of each isotope released during the previous month. Table 1 source terms may be used if there have been no liquid releases.

2. Determine S_i (the fraction of the total radioactivity in the liquid effluent comprised by radionuclide i) for each individual radionuclide in the liquid effluent.

$$S_i = \frac{A_i}{\sum_i A_i} \qquad 2.1\text{-}1$$

where

A_i = The radioactivity of radionuclide i in the liquid effluent from Table 1.

B. Determine C_t, the maximum acceptable total radioactivity concentration of all radionuclides in the liquid effluent prior to dilution (μCi/ml).

$$C_t = \frac{F}{f \sum_i \frac{S_i}{MPC_i}} \qquad 2.1\text{-}2$$

where

F = Dilution water flowrate (gpm):

= Current circulating water flowrate or 240,000 gpm from two circulating water pumps, whichever is less.

f = The maximum acceptable discharge flowrate prior to dilution (gpm);

= 50 gpm from the Liquid Radwaste Pump [3];

and

MPC_i = The liquid effluent radioactivity concentration limit for radionuclide i (μCi/ml) from Table 1.

C. Determine C_m, the maximum acceptable total radioactivity concentration of the radionuclides (minus tritium) in the liquid discharge prior to dilution (μCi/ml).

$$C_m = C_t - (C_t S_H) \qquad 2.1\text{-}3$$

where

S_H = The fraction of the total radioactivity in the liquid effluent comprised of tritium and other radionuclides that do not emit gamma or x ray radiation.

D. Determine C.R., the calculated monitor count rate above background attributed to the radionuclides (ncps).

$$C.R. = \frac{C_m}{E} \qquad 2.1\text{-}4$$

where

E = The detection efficiency of the monitor (μCi/cc/cps) from Plant Chemistry Surveillance procedures.

E. The monitor high-high alarm setpoint above background (ncps) should be set at or less than the C.R. value. Since only one tank can be released at a time, adjustment of this value is not necessary to compensate for releases from more than one source.

2.1.2 Discharge Canal Monitor

The following method determines the high-high alarm setpoint for the Discharge Canal Monitor during all operational conditions.

A. Determine the "mix" (radionuclides and composition) of all liquids released into the discharge canal.

1. Determine the liquid source terms that are representative of the "mix" of all liquid released into discharge canal. Liquid source terms are the total curies of each isotope released during the previous month. Table 1 source terms may be used if there have been no liquid releases.

2. Determine S_i, the fraction of the total radioactivity of all liquids released into the discharge canal comprised by radionuclide i for each individual radionuclide released into the discharge canal.

$$S_i = \frac{A_i}{\Sigma A_i} \qquad 2.1\text{-}5$$

where

A_i = The radioactivity of radionuclide i released into the discharge canal.

B. Determine C_d, the maximum acceptable total radioactivity concentration of all radionuclides released into the discharge canal (μCi/ml).

$$C_d = \frac{1}{\sum_i \frac{S_i}{MPC_i}} \qquad 2.1\text{-}6$$

where

MPC_i = The liquid effluent radioactivity concentration limit for radionuclide i (μCi/ml) from Table 1.

C. Determine C_m, the maximum acceptable total radioactivity concentration of the radionuclides (minus tritium) released into the discharge canal (μCi/ml).

$$C_m = C_d - (C_d S_H) \qquad 2.1\text{-}7$$

where

S_H = The fraction of the total radioactivity released into the discharge canal comprised of tritium and other radionuclides that do not emit gamma or x-ray radiation.

D. Determine C.R., the calculated monitor count rate above background attributed to the radionuclides (ncps).

$$C.R. = \frac{C_m}{E} \qquad 2.1\text{-}8$$

where

E = The detection efficiency of the monitor (μCi/cc/cps) from Plant Chemistry Surveillance procedures.

E. The monitor high-high alarm setpoint above background (ncps) should be set at or less than the C.R. value.

2.1.3 Service Water Discharge Pipe Monitor

Dilution flow is not used for the service water discharge pipe monitor setpoint determination to ensure the setpoint is valid for all modes of plant operation. The following method determines the high-high alarm setpoint for the Service Water Discharge Pipe Monitor during all operational conditions.

A. Determine the "mix" (radionuclides and composition) of the service water effluent.

1. Determine the liquid source terms that are representative of the "mix" of the service water effluent. Liquid source terms are the total curies of each isotope released during the previous month. Table 1 source terms may be used if there have been no liquid releases.

2. Determine S_i the fraction of the total radioactivity in the service water effluent comprised by radionuclide i, for each individual radionuclide in the liquid effluent.

$$S_i = \frac{A_i}{\sum_i A_i} \qquad 2.1\text{-}9$$

where

A_i = The radioactivity of radionuclide i in the service water effluent.

B. Determine C_t, the maximum acceptable total radioactivity concentration of all radionuclides in the service water effluent prior to dilution (μCi/ml).

$$C_t = \frac{1}{\sum_i \frac{S_i}{MPC_i}} \qquad 2.1\text{-}10$$

where

MPC_i = The liquid effluent radioactivity concentration limit for radionuclide i (μCi/ml) from Table 1.

C. Determine C_m, the maximum acceptable total radioactivity concentration of the radionuclides (minus tritium) in the service water prior to dilution (μCi/ml).

$$C_m = C_t - (C_t S_H) \qquad 2.1\text{-}11$$

where

S_H = The fraction of the total radioactivity in the service water effluent comprised of tritium and other radionuclides that do not emit gamma or x-ray radiation.

D. Determine C.R., (the calculated monitor count rate above background attributed to the radionuclides (ncps)).

$$C.R. = \frac{C_m}{E} \qquad 2.1\text{-}12$$

where

E = The detection efficiency of the monitor (μCi/cc/cps) from Plant Chemistry Surveillance procedures.

E. The monitor high-high alarm setpoint above background (ncps) should be set at or less than the C.R. value.

2.1.4 Turbine Building Normal Drain Sump Monitor

Dillution flow is not used for the Turbine Building Normal Drain Sump Monitor setpoint determination to ensure the setpoint is valid for all modes of plant operation. The following method determines the high-high alarm setpoint for the Turbine Building Normal Drain Sump Monitor during all operational conditions.

A. Determine the "mix" (radionuclides and composition) of the TBNDS effluent.

1. Determine the liquid source terms that are representative of the "mix" of the TBNDS effluent. Liquid source terms are the total curies of each isotope released during the previous month. Table 1 source terms may be used if there have been no liquid releases.

2. Determine S_i, the fraction of the total radioactivity in the TBNDS effluent comprised by radionuclide i, for each individual radionuclide in the liquid effluent.

$$S_i = \frac{A_i}{\sum_i A_i} \qquad 2.1\text{-}13$$

where

A_i = The radioactivity of radionuclide i in the TBNDS effluent.

B. Determine C_t, the maximum acceptable total radioactivity concentration of all radionuclides in the TBNDS effluent prior to dilution (μCi/ml).

$$C_t = \frac{1}{\sum_i \frac{S_i}{MPC_i}} \qquad 2.1\text{-}14$$

MPC_i = The liquid effluent radioactivity concentration limit for radionuclide i (μCi/ml) from Table 1.

C. Determine C_m, the maximum acceptable total radioactivity concentration of the radionuclides (minus tritium) in the TBNDS prior to dilution (μCi/ml).

$$C_m = C_t - (C_t S_H) \qquad 2.1\text{-}15$$

where

S_H = The fraction of the total radioactivity in the TBNDS effluent comprised of tritium and other radionuclides that do not emit gamma or x-ray radiation.

D. Determine C.R., the calculated monitor count rate above background attributed to the radionuclides (ncps).

$$C.R. = \frac{C_m}{E} \qquad 2.1\text{-}16$$

where

E = The detection efficiency of the monitor (μCi/cc/cps) from Plant Chemistry Surveillance procedures.

E. The monitor high-high alarm setpoint above background (ncps) should be set at or less than the C.R. value.

2.1.5 Multiple Release Points

The discharge canal monitor, service water discharge and TBNDS line monitor are provided to detect unplanned or accidental releases. All normal releases are monitored by the radwaste discharge line monitor. There are, therefore, no multiple release points and monitor settings do not have to be reduced to account for multiple releases.

2.2 Liquid Effluent Concentration - Compliance With 10CFR20

In order to demonstrate compliance with 10CFR20, the concentrations of radionuclides in liquid effluents are determined and compared to 10 times the concentrations specified in Appendix B, Table 2, Column 2 to 10CFR20.1001-20.2402. The concentration of radioactivity in effluents prior to dilution is determined. The concentration in diluted effluent is calculated by the LIQDOS computer program.

2.2.1 Batch Releases

A. Prerelease

The radioactivity content of each batch release is determined prior to release. MNGP will show compliance with Tech Specs (TS) in the following manner:

The concentration of the various radionuclides in the batch release prior to dilution flow to obtain the concentration at the unrestricted area. This calculation is shown in the following equation:

$$Conc_i = \frac{C_i R}{MDF} \qquad 2.2\text{-}1$$

where

$Conc_i$ = concentration of radionuclide i at the unrestricted area, (μCi/ml);

C_i = concentration of radionuclide i in the potential batch release, (μCi/ml);

R = release rate of the batch, (gpm);

MDF = minimum dilution flow, (gpm).

The projected concentration in the unrestricted area is compared to 10 times the concentrations specified in Appendix B, Table 2, Column 2 to 10CFR20.1001-20.2402. These concentrations are given in Table 1. Before a release may occur, Equation 2.2-2 must be met for all nuclides. For the MNGP the MDF is 240,000 gpm. The maximum release rate is 50 gpm.

$$\sum_i \frac{Conc_i}{MPC_i} \leq 1 \qquad 2.2\text{-}2$$

where

MPC_i = maximum concentration of radionuclide i from Table 1, (μCi/ml).

2.3 Liquid Effluent Doses - Compliance With 10CFR50

Doses resulting from liquid effluents are calculated monthly to show compliance with 10CFR 50. These calculations are performed by the LIQDOS computer program. A cumulative summation of total body and organ doses for each calendar quarter and calender year is maintained as well as projected doses for the next month.

2.3.1 Determination of Liquid Effluent Dilution

To determine doses from liquid effluents the near field average dilution factor for the period of release must be calculated. This dilution factor must be calculated for each bath release. The dilution factor is determined by:

$$F_k = \frac{R_k}{X\,ADF_k} \qquad 2.3\text{-}1$$

where

R_k = release rate of the batch during time period k, (gpm);

and

ADF_k = actual dilution flow during the time period of release k, (gpm).

The value of X is the site specific value for the mixing effect of the MNGP discharge structure. This value is 1.0 for MNGP while operating in the once-through cooling mode. Although not expected to occur, if radioactive material is discharged while operating in the recycle mode, this value may be 1.86. [4]

2.3.2 Dose Calculations

The dose contribution from the release of liquid effluents is calculated monthly. The dose contribution is calculated using the following equation:

$$D_j = \sum_k \sum_i A_{ij} t_k C_{ik} F_k \qquad 2.3\text{-}2$$

where

D_j = the dose commitment to the total body or any organ, from the liquid effluents for the 31 day period, (mrem);

C_{ik} = the average concentration of radionuclide, i, in undiluted liquid effluent for release k, (μCi/ml);

A_{ij} = the site related ingestion dose commitment factor to the total body or any organ j for each identified principal gamma and beta emitter, (mrem/hr per μCi/ml);

F_k = the near field average dilution factor for C_{ik} during liquid effluent release k, as defined in Equation 2.3-1, and

t_k = the length of time for release k, (hours).

The dose factor A_{ij} was calculated for an adult for each isotope using the following equation:

$$A_{ij} = 1.14 \times 10^5 \, (730/D_w + 21BF_i) \, DF_{ij} \qquad 2.3\text{-}3$$

where

$$1.14 \times 10^5 = \frac{10^6 pCi}{\mu Ci} \quad \frac{10^3 ml}{liter} \quad \frac{1\ yr}{8760\ hr}$$

730 = adult water consumption rate, (liters/yr);

D_w = dilution factor from the near field area to the potable water intake for adult water consumption;

21 = adult fish consumption, (kg/yr);

BF_i = bioaccumulation factor for radionuclide i in fish from Table A-1 of Regulatory Guide 1.109 Rev. 1, [5] (pCi/kg per pCi/liter);

DF_{ij} = dose conversion factor for radionuclide i for adults for particular organ j from Table E-11 of Regulatory Guide 1.109 Rev. 1, (mrem/pCi).

The A_{ij} values for an adult at the MNGP are given in Table 2. The far field dilution factor, D_w for the MNGP is 7:1 for the nearest downstream water supply in St. Paul. This value was determined by assuming that effluents are completely mixed in 50% of the Mississippi River flow (7431 cfs at Anoka, MN). [6]

2.3.3 Cumulation of Doses

Doses calculated monthly are summed for comparison with quarterly and annual limits. The monthly results should be added to the doses cumulated from the other months in the quarter of interest and in the year of interest. This summation is performed by the LIQDOS computer program.

For the quarter:

$D \leq 1.5$ mrem total body 2.3-4

$D \leq 5$ mrem any organ 2.3-5

For the Calendar Year,

$D \leq 3$ mrem total body 2.3-6

$D \leq 10$ mrem any organ 2.3-7

The quarterly limits given above represent one half of the annual design objective.[7] If these quarterly or annual limits are exceeded, a special report should be submitted stating the reason and corrective action to be taken. This report will include results of analysis of Mississippi River water and an analysis of possible impacts through the drinking water pathway. If twice these limits are exceeded, a special report will be submitted showing compliance with 40CFR190.[8]

2.3.4 Projection of Doses

Anticipated doses resulting from the release of liquid effluents are projected monthly. If the projected doses for the month exceed 2% of Equation 2.3-6 or 2.3-7, additional components of the liquid radwaste treatment system will be used to process waste. The projected doses are calculated using Equation 2.3-2. This calculation is performed by the LIQDOS computer program. The dilution factor, F_k, is calculated by replacing the term ADF_k in Equation 2.3-1 with the term MDF from Equation 2.2-1.

The total source term utilized for the most recent dose calculation should be used for the projections unless information exists indicating that actual releases could differ significantly in the next month. In this case, the source term would be adjusted to reflect this information and the justification for the adjustment noted. This adjustment should account for any radwaste equipment which was operated during the previous month that could be out of service in the coming month.

2.4 References

1. USNRC, Title 10, Code of Federal Regulation, Part 20.1001-20.2402, "Standards for Protection Against Radiation", Appendix B, Table II, Column 2.

2. NSP - Monticello Nuclear Generating Plant, Appendix I Analysis - Supplement No. 1 - Docket No. 50-263, Table 2.1-2.

3. NSP - Monticello Nuclear Generating Plant, Appendix I Analysis - Supplement No. 1 - docket No. 50-263, Table 2.1-1.

4. Boegli, J.S., et. al. Eds, Section 4.3 in "Preparation of Radiological Effluent Technical Specifications for Nuclear Power Plants, NUREG-0133, 1978, NTIS, Springfield, VA.

5. USNRC, Regulatory Guide 1.109. "Calculation of Annual Doses to Man from Routine Releases of Reactor Effluents for the Purpose of Evaluating Compliance with 10CFR50, Appendix I", Rev. 1, Oct. 1977, USNRC, Washington, DC.

6. NSP - Monticello Nuclear Generating Plant, Final Draft Safety Analysis Report - Amendment 4, Question 3.3, and Amendment 8 in entirety.

7. USNRC, Title 10, Code of Federal Regulation, Part 50, "Domestic Licensing of Production and Utilization Facilities", Appendix I, "Numerical Guides for Design Objectives and Limiting Conditions for Operation to Meet the Criterion As Low as is Reasonably Achievable for Radioactive Material in Light-Water-Cooled Nuclear Power Reactor Effluents".

8. EPA, Title 40, Code of Federal Regulations, Part 190 "Environmental Radiation Protection Standards for Nuclear Power Operations".

Figure 1 Radwaste Clean, Dirty, Solid Waste

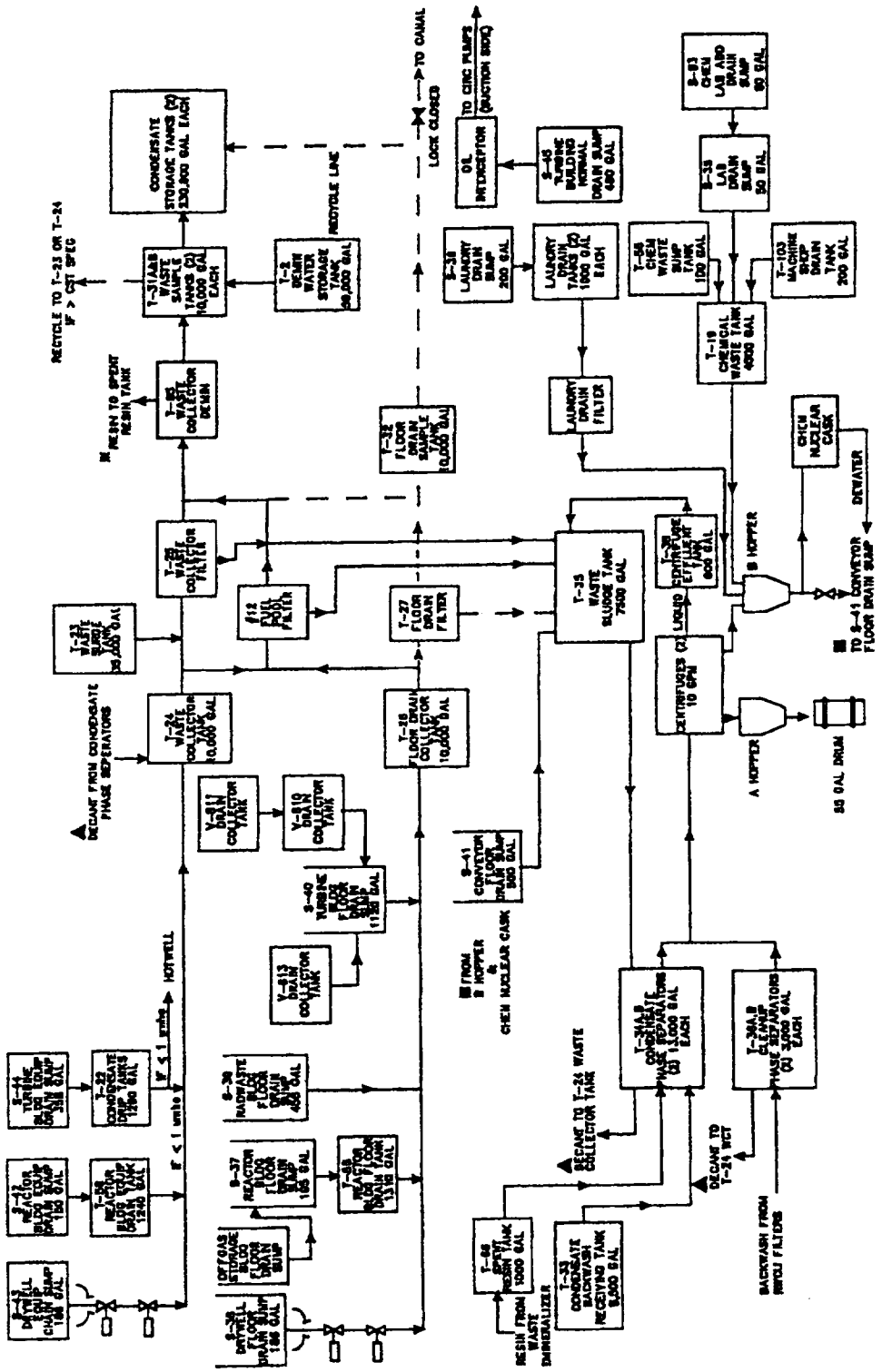

Table 1 Liquid Source Terms

Radionuclide	Radioactivity A_i Ci/yr*	MPC_i µCi/ml**
H-3	2.1E 1	1E-2
Na-24	1.7E-1	5E-4
Mn-54	2.6E-3	3E-4
Mn-56	2.7E-1	7E-4
Fe-59	8.1E-4	1E-4
Co-58	9.3E-3	2E-4
Co-60	2.0E-2	3E-5
Cu-64	5.4E-1	2E-3
Zn-65	5.3E-3	5E-5
Zn-69m	3.7E-2	6E-4
Br-83	1.4E-2	9E-3
Sr-89	2.8E-3	8E-5
Sr-90	1.7E-4	5E-6
Sr-91	6.4E-2	2E-4
Sr-92	5.8E-2	4E-4
Y-92	1.0E-1	4E-4
Y-93	6.6E-2	2E-4
Mo-99	5.0E-2	2E-4
I-131	1.3E-1	1E-5
I-132	1.3E-1	1E-3
I-133	4.0E-1	7E-5
I-134	6.4E-2	4E-3
I-135	2.5E-1	3E-4
Cs-134	8.3E-2	9E-6
Cs-136	2.6E-2	6E-5
Cs-137	1.2E-1	1E-5
Cs-138	1.5E-1	4E-3
Ba-140	1.1E-2	8E-5
La-141	5.7E-3	5E-4
Ce-141	8.5E-4	3E-4
Ce-144	5.3E-3	3E-5
Np-239	1.7E-1	2E-4
Noble Gases	-	
Total	2.40E1	

* These source terms were calculated in accordance with NUREG-0016 by using the USNRC "GALE" Code.

** MPC_i Values are 10 times the concentration values of 10CFR20.1001 - 20.2402 Table 2 Column 2.

Table 2 A_{ij} Values for the Monticello Nuclear Generating Plant (mrem/hr per μCi/ml)

Nuclide	Bone	Liver	T. Body	Thyroid	Kidney	Lung	GI-LLI
1 H-3	0.00E 00	1.47E 00	1.47E 00	1.47E 00	1.47E 00	1.47E 00	1.47E 00
6 C 14	3.13E 04	6.26E 03	6.26E 03	6.26E 03	6.26E 03	6.26E 03	6.26E 03
11 Na-24	4.27E 02	4.27E 02	4.27E 02	4.27E 02	4.27E 02	4.27E 02	4.27E 02
24 Cr-51	0.00E 00	0.00E 00	1.31E 00	7.80E 01	2.38E 01	1.73E 00	3.28E 02
25 Mn-54	0.00E 00	4.43E 02	8.45E 02	0.00E 00	1.32E 03	0.00E 00	1.36E 04
25 Mn-56	0.00E 00	1.11E 02	1.98E 01	0.00E 00	1.42E 02	0.00E 00	3.56E 03
26 Fe-55	6.91E 02	4.77E 02	1.11E 02	0.00E 00	0.00E 00	2.66E 02	2.74E 02
26 Fe-59	1.09E 03	2.56E 03	9.83E 02	0.00E 00	0.00E 00	7.16E 02	8.54E 03
27 Co-58	0.00E 00	9.80E 01	2.20E 02	0.00E 00	0.00E 00	0.00E 00	1.99E 03
27 Co-60	0.00E 00	2.82E 02	6.21E 02	0.00E 00	0.00E 00	0.00E 00	5.29E 03
28 Ni-63	3.27E 04	2.26E 03	1.10E 03	0.00E 00	0.00E 00	0.00E 00	4.72E 02
28 Ni-65	1.33E 02	1.72E 01	7.87E 00	0.00E 00	0.00E 00	0.00E 00	4.37E 02
29 Cu-64	0.00E 00	1.10E 01	5.15E 00	0.00E 00	2.76E 01	0.00E 00	9.34E 02
30 Zn-65	2.32E 04	7.39E 04	3.34E 04	0.00E 00	4.94E 04	0.00E 00	4.66E 04
30 Zn-69	4.94E 01	9.46E 01	6.58E 00	0.00E 00	6.14E 01	0.00E 00	1.42E 01
35 Br-83	0.00E 00	0.00E 00	4.09E 01	0.00E 00	0.00E 00	0.00E 00	5.89E 01
35 Br-84	0.00E 00	0.00E 00	5.30E 01	0.00E 00	0.00E 00	0.00E 00	4.16E-04
35 Br-85	0.00E 00	0.00E 00	2.18E 00	0.00E 00	0.00E 00	0.00E 00	1.02E-15
37 Rb-86	0.00E 00	1.01E 05	4.72E 04	0.00E 00	0.00E 00	0.00E 00	2.00E 04
37 Rb-88	0.00E 00	2.90E 02	1.54E 02	0.00E 00	0.00E 00	0.00E 00	4.01E-09
37 Rb-89	0.00E 00	1.92E 02	1.35E 02	0.00E 00	0.00E 00	0.00E 00	1.12E-11
38 Sr-89	2.58E 04	0.00E 00	7.40E 02	0.00E 00	0.00E 00	0.00E 00	4.14E 03
38 Sr-90	6.35E 05	0.00E 00	1.56E 05	0.00E 00	0.00E 00	0.00E 00	1.83E 04
38 Sr-91	4.75E 02	0.00E 00	1.92E 01	0.00E 00	0.00E 00	0.00E 00	2.26E 03
38 Sr-92	1.80E 02	0.00E 00	7.78E 00	0.00E 00	0.00E 00	0.00E 00	3.57E 03

Table 2 A_{ij} Values for the Monticello Nuclear Generating Plant (mrem/hr per μCi/ml) (cont'd)

Nuclide	Bone	Liver	T. Body	Thyroid	Kidney	Lung	GI-LLI
39 Y-90	6.90E-01	0.00E 00	1.35E-02	0.00E 00	0.00E 00	0.00E 00	7.32E 03
39 Y-91m	6.52E-03	0.00E 00	2.53E-04	0.00E 00	0.00E 00	0.00E 00	1.92E-02
39 Y-91	1.01E 01	0.00E 00	2.70E-01	0.00E 00	0.00E 00	0.00E 00	5.57E 03
39 Y-92	6.06E-02	0.00E 00	1.77E-03	0.00E 00	0.00E 00	0.00E 00	1.06E 03
39 Y-93	1.92E-01	0.00E 00	5.31E-03	0.00E 00	0.00E 00	0.00E 00	6.10E 03
40 Zr-95	6.02E-01	1.93E-01	1.31E-01	0.00E 00	3.03E-01	0.00E 00	6.11E 02
40 Zr-97	3.32E-02	6.71E-03	3.07E-03	0.00E 00	1.01E-02	0.00E 00	2.08E 03
41 Nb-95	4.47E 02	2.49E 02	1.34E 02	0.00E 00	2.46E 02	0.00E 00	1.51E 06
42 Mo-99	0.00E 00	1.54E 02	2.94E 01	0.00E 00	3.50E 02	0.00E 00	3.58E 02
43 Tc-99m	1.13E-02	3.34E-02	4.25E-01	0.00E 00	5.07E-01	1.63E-02	1.97E 01
43 Tc-101	1.21E-02	1.75E-02	1.72E-01	0.00E 00	3.15E-01	8.94E-03	5.26E-14
44 Ru-103	6.63E 00	0.00E 00	2.86E 00	0.00E 00	2.53E 01	0.00E 00	7.74E 02
44 Ru-105	5.52E 01	0.00E 00	2.18E-01	0.00E 00	7.13E 00	0.00E 00	3.38E 02
44 Ru-106	9.85E 01	0.00E 00	1.25E 01	0.00E 00	1.90E 02	0.00E 00	6.38E 03
47 Ag-110m	2.78E 00	2.57E 00	1.53E 00	0.00E 00	5.06E 00	0.00E 00	1.05E 03
52 Te-125m	2.60E 03	9.41E 02	3.48E 02	7.81E 02	1.06E 04	0.00E 00	1.04E 04
52 Te-127m	6.56E 03	2.35E 03	8.00E 02	1.68E 03	2.67E 04	0.00E 00	2.20E 04
52 Te-127	1.07E 02	3.83E 01	2.31E 01	7.90E 01	4.34E 02	0.00E 00	3.42E 03
52 Te-129m	1.11E 04	4.16E 03	1.76E 03	3.83E 03	4.65E 04	0.00E 00	5.61E 04
52 Te-129	3.04E 01	1.14E 01	7.42E 00	2.34E 01	1.23E 02	0.00E 00	2.30E 01
52 Te-131m	1.68E 03	8.20E 02	6.83E 02	1.30E 03	9.31E 03	0.00E 00	8.14E 04
52 Te-131	1.81E 01	7.98E 00	6.03E 00	1.57E 01	8.37E 01	0.00E 00	2.70E 00
52 Te-132	2.44E 03	1.58E 03	1.48E 03	1.75E 03	1.52E 04	0.00E 00	7.47E 04
53 I-130	3.61E 01	1.07E 02	4.21E 01	9.03E 03	1.66E 02	0.00E 00	9.18E 01
53 I-131	1.99E 02	2.84E 02	1.63E 02	9.32E 04	4.88E 02	0.00E 00	7.50E 01
53 I-132	9.70E 00	2.60E 01	9.08E 00	9.08E 02	4.13E 01	0.00E 00	4.88E 00
53 I-133	6.79E 01	1.18E 02	3.60E 01	1.74E 04	2.06E 02	0.00E 00	1.06E 02
53 I-134	5.07E 00	1.38E 01	4.92E 00	2.39E 02	2.19E 01	0.00E 00	1.20E-02
53 I-135	2.12E 01	5.54E 01	2.05E 01	3.66E 03	8.89E 01	0.00E 00	6.26E 01

Table 2 A_{ij} Values for the Monticello Nuclear Generating Plant (mrem/hr per μCi/ml) (cont'd)

Nuclide	Bone	Liver	T. Body	Thyroid	Kidney	Lung	GI-LLI
55 Cs-134	2.99E 05	7.10E 05	5.81E 05	0.00E 00	2.30E 05	7.63E 04	1.24E 04
55 Cs-136	3.12E 04	2.23E 05	8.88E 04	0.00E 00	6.86E 04	9.41E 03	1.40E 04
55 Cs-137	3.83E 05	5.23E 05	3.43E 05	0.00E 00	1.78E 05	5.90E 04	1.01E 04
55 Cs-138	2.65E 02	5.23E 02	2.59E 02	0.00E 00	3.84E 02	3.80E 01	2.23E-03
56 Ba-139	2.08E 00	1.48E-03	6.10E-02	0.00E 00	1.39E-03	8.41E 04	3.69E 00
56 Ba-140	4.36E 02	5.47E-01	2.85E 01	0.00E 00	1.86E-01	3.13E 01	8.97E 02
56 Ba-141	1.01E 00	7.64E-04	3.41E-02	0.00E 00	7.10E-04	4.34E 04	4.77E-10
56 Ba-142	4.57E-01	4.70E-04	2.88E-02	0.00E 00	3.97E-04	2.66E 04	6.44E-19
57 La-140	1.79E-01	9.04E-02	2.39E-02	0.00E 00	0.00E 00	0.00E 00	6.64E 03
57 La-142	9.18E-03	4.18E-03	1.04E-03	0.00E 00	0.00E 00	0.00E 00	3.05E 01
58 Ce-141	1.34E-01	9.04E-02	1.03E-02	0.00E 00	4.20E-02	0.00E 00	3.46E 02
58 Ce-143	2.36E-02	1.74E 01	1.93E-03	0.00E 00	7.67E-03	0.00E 00	6.51E 02
58 Ce-144	6.97E 00	2.91E 00	3.74E-01	0.00E 00	1.73E 00	0.00E 00	2.36E 03
59 Pr-143	6.60E-01	2.65E-01	3.27E-02	0.00E 00	1.53E-01	0.00E 00	2.89E 03
59 Pr-144	2.16E-03	8.97E-04	1.10E-04	0.00E 00	5.06E-04	0.00E 00	3.11E-14
60 Nd-147	4.51E-01	5.22E-01	3.12E-02	0.00E 00	3.05E-01	0.00E 00	2.50E 04
74 W-187	2.97E 02	2.48E 02	8.68E 01	0.00E 00	0.00E 00	0.00E 00	8.13E 04
93 Np-239	4.26E-02	4.19E-03	2.31E-03	0.00E 00	1.31E-02	0.00E 00	8.60E 02

OFFSITE DOSE CALCULATION MANUAL - TABLE OF CONTENTS

SECTION		PAGE
1.0	RECORD OF REVISION	3
2.0	GASEOUS EFFLUENT CALCULATIONS	4
2.1	Monitor Alarm Setpoint Determination	4
2.2	Gaseous Effluent Dose Rate - Compliance With 10CFR20	12
2.3	Gaseous Effluents - Compliance With 10CFR50	15
2.4	Summary of EBARR Computer Program	21
2.5	Dose Parameters for Radioiodines, Particulates and Tritium	26
2.6	References	35
Figure 1	Gaseous Radwaste	36
Figure 2	Ventilation System	37
Table 1	Gaseous Source Terms(3) Ai, Ci/yr	38
Table 2	Dose Factors and Constants for the Total Body and Skin for Gaseous Radionuclides	39
Table 3	Air Ejector Monitor Trip Setting and Storage Tank Contents Storage Tank Activity in Dose Equivalent Curies Xe-133 12 Hours After Completion of Tank Fill Release Rate Set to 1.00 of Maximum Trip Setting	41
Table 4	Child Critical Organ Dose Parameters for Radionuclide i for the Inhalation Pathway	44
Table 5	Dose Factors for Noble Gases and Daughters That May Be Detected in Gaseous Effluents	45
Table 6	Dose Parameters for Finite Evaluated Plumes for the Critical Boundary Location 0.51 mi from the Stack in the SSE Sector	46
Table 7	Ri Values for the Monticello Nuclear Generating Plant Ground Pathway	47

Prepared By: B Peterson	
Reviewed By: [illegible]	
OC Final Review Meeting: # 2242	Date: 11/02/2000
Approved By Plant Manager:	Date:

*This is a major rewrite, therefore, no sidelines are required.

3087 (DOCUMENT CHANGE, HOLD, AND COMMENT FORM) incorporated: 00-2348			
Resp Supv: CHEM	Assoc Ref: CHEM-I	SR: N	Freq: 2 yrs
ARMS: ODCM-05.01	Doc Type: 7030	Admin Initials:	Date:

l/plr

SECTION		PAGE
Table 8	Ri Values for the Monticello Nuclear Generating Plant Vegetable Pathway Adult Age Group	48
Table 9	Ri Values for the Monticello Nuclear Generating Plant Vegetable Pathway Teen Age Group	49
Table 10	Ri Values for the Monticello Nuclear Generating Plant Vegetable Pathway Child Age Group	50
Table 11	Ri Values for the Monticello Nuclear Generating Plant Meat Pathway Adult Age Group	51
Table 12	Ri Values for the Monticello Nuclear Generating Plant Meat Pathway Teen Age Group	52
Table 13	Ri Values for the Monticello Nuclear Generating Plant Meat Pathway Child Age Group	53
Table 14	Ri Values for the Monticello Nuclear Generating Plant Cow Milk Pathway Adult Age Group	54
Table 15	Ri Values for the Monticello Nuclear Generating Plant Cow Milk Pathway Teen Age Group	55
Table 16	Ri Values for the Monticello Nuclear Generating Plant Cow Milk Pathway Child Age Group	56
Table 17	Ri Values for the Monticello Nuclear Generating Plant Cow Milk Pathway Infant Age Group	57
Table 18	Ri Values for the Monticello Nuclear Generating Plant Goat Milk Pathway Adult Age Group	58
Table 19	Ri Values for the Monticello Nuclear Generating Plant Goat Milk Pathway Teen Age Group	59
Table 20	Ri Values for the Monticello Nuclear Generating Plant Goat Milk Pathway Child Age Group	60
Table 21	Ri Values for the Monticello Nuclear Generating Plant Goat Milk Pathway Infant Age Group	61
Table 22	Ri Values for the Monticello Nuclear Generating Plant Inhalation Pathway Adult Age Group	62
Table 23	Ri Values for the Monticello Nuclear Generating Plant Inhalation Pathway Teen Age Group	63
Table 24	Ri Values for the Monticello Nuclear Generating Plant Inhalation Pathway Child Age Group	64
Table 25	Ri Values for the Monticello Nuclear Generating Plant Inhalation Pathway Infant Age Group	65
Table 26	Table of Radioisotope Constants Used by EBARR	66

1.0 RECORD OF REVISION

Revision No.	Date	Reason for Revision
1	December - 1998	Changed word "waste" to "effluent" in section 1.0, changed 1st sentence in section 2.0 to exact wording in T.S., added section 3.0 to reference section 1.0 word change to LAR 39.
2	October - 2000	Moved previous ODCM-03.01 (GASEOUS EFFLUENTS) into this section and renamed this section "GASEOUS EFFLUENTS CALCULATIONS" to facilitate moving the Radiological Effluents Tech Specs to the ODCM. Moved associated figures and tables into this section to make the section easier to use. Removed references to the unused MIDAS System. Revised references to the X/Q and D/Q values now located in Appendix A.

2.0 GASEOUS EFFLUENT CALCULATIONS

This section describes the procedures used by MNGP to:

A. Determine alarm point settings for gaseous effluent monitors;

B. Determine that dose rates at the site boundary from noble gases, particulates, and iodines remain below the limits of 10CFR20, and

C. Determine that the total dose from airborne effluents for the year is within the limits of Appendix I of 10CFR50.

The computations of this section may be done manually, by use of computer programs which implement these algorithms.

2.1 Monitor Alarm Setpoint Determination

This procedure determines the effluent monitor alarm setpoint that indicates if the dose rate at or beyond the site boundary due to noble gas radionuclides in the gaseous effluent released from the site exceeds 500 mrem/year to the whole body or exceeds 3000 mrem/year to the skin. Accident monitors are set to limit effluent releases to a small fraction of the limits specified in 10CFR100. In addition this section calculates the maximum activity permitted in each offgas storage tank.

Monitor high alarm or isolation setpoints are established in one of the following ways:

1. Monthly calculation of setpoints using the methodology of Section 2.1.1 for noble gas nuclides in releases during the previous month.

2. Prior to each containment purge, recalculation of the setpoint using the methodology of Section 2.1.1 based on the sample taken prior to purging.

2.1.1 Effluent Monitors

Monitor alarm setpoints are determined to assure compliance with 10CFR 20. The setpoints indicate that the dose rate at or beyond the site boundary due to noble gas radionuclides in the gaseous effluent released from the site exceeds 500 mrem/year to the whole body or exceeds 3000 mrem/year to the skin.

Monitor alarm setpoints are calculated for the Reactor Building Ventilation Plenum Noble Gas monitors and the Stack Noble Gas monitors once per month. These calculations are based on the noble gas isotopes in releases made during the previous month. The calculations are performed by the DOSGAS computer program.

In addition, prior to containment purging, the monitor setpoint for the monitor release point is recalculated. This calculation is performed by the DWCAL computer program. The monitor setpoint is determined as follows:

1. If no detectable noble gas activity is found in the purge sample, the values used as the basis for the alarm point setting are from the column, "Drywell purging" in Table 1, Gaseous Source Terms.

2. If any calculated setpoint is less than the existing monitor setpoint, the setpoint is reduced to the new value.

3. If the calculated setpoint is greater than the existing monitor setpoint, the setpoint may remain at the lower value or be increased to the new value.

4. The setpoint during purging may not be increased above the setpoint determined for continuous releases, however.

Except for containment inerting and deinerting, all containment purging and venting is done via the standby gas treatment system and plant stack. Containment inerting and deinerting releases are made via the Reactor Building vent. The small amount of containment atmosphere released by the containment sampling system on a continuous basis is not considered a venting operation.

A. Reactor Building Vent Alarm Setpoint

The following method applies to gaseous releases via the Reactor Building vent when determining the high-high alarm setpoint for the Reactor Building Vent Noble Gas Monitor . This method is applied to both continuous releases and batch releases (containment inerting and deinerting).

1. Determine the "mix" (noble gas radionuclides and composition) of the gaseous effluent.

   a. Determine the gaseous source terms that are representative of the "mix" of the gaseous effluent. Gaseous source terms are the total curies of each noble gas released during the previous month or a representative analysis of the gaseous effluent. Table 1 source terms may be used if the Reactor Building releases for the previous month were below the lower limits of detection (LLD), or, in the case of inerting and deinerting releases, no detectable activity was found in the grab sample taken prior to purging.

b. Determine S_i, the fraction of the total radioactivity in the gaseous effluent comprised by noble gas radionuclide "i", for each individual noble gas radionuclide in the gaseous effluent.

$$S_i = \frac{A_i}{\sum_i A_i} \qquad 2.1\text{-}1$$

where

A_i = The radioactivity of noble gas radionuclide "i" in the gaseous effluent.

2. Determine Q_t, the maximum acceptable total release rate of all noble gas radionuclides in the gaseous effluent (μCi/sec), based upon the whole body exposure limit (500 mrem/yr).

$$Q_t = \frac{500}{(\chi/Q)_v \sum_i K_i S_i} \qquad 2.1\text{-}2$$

where

$(\chi/Q)_v$ = The highest calculated average relative concentration of effluents released via the Reactor Building vent for any area at or beyond the site boundary for all sectors (sec/M^3) from Appendix A, Table 3. For purge releases, substitute the value obtained from Chemistry Manual Procedure I.6.07 (ATMOSPHERIC DISPERSION DETERMINATION).

K_i = The total whole body dose factor due to gamma emissions from noble gas radionuclide "i" (mrem/year/μCi/m^3) from Table 2.

3. Determine Q_t based upon the skin exposure limit (3000 mrem/yr).

$$Q_t = \frac{3000}{(\chi/Q) \sum_i (L_i + 1.1\ M_i)\ S_i} \qquad 2.1\text{-}3$$

where

$L_i + 1.1\ M_i$ = the total skin dose factor due to emissions from noble gas radionuclide "i" (mrem/year/μCi/m^3) from Table 2.

4. Determine HHSP (the monitor high-high alarm setpoint above background (net μCi/sec)).

<u>NOTE</u>: Use the <u>lower</u> of the Q_t values obtained in Sections 2.1.1.A.2. and 2.1.1.A.3.

$$HHSP = 0.50\ Q_t \qquad 2.1\text{-}4$$

0.50 = Fraction of the total radioactivity from the site via the monitored release point to ensure that the site boundary limit is not exceeded due to simultaneous releases from several release points.

B. Stack Isolation Setpoint

The following method applies to gaseous releases via the Stack when determining the high-high alarm setpoint for the Stack Gas Monitor which initiates isolation of Stack releases. The method is applied to both continuous releases and batch releases (containment purges). Mechanical vacuum pump releases (relatively insignificant) will be controlled using the continuous setpoint.

1. Determine the "mix" (noble gases and composition) of the gaseous effluent.

   a. Determine the gaseous source terms that are representative of the "mix" of the gaseous effluent. Gaseous source terms are the total curies of each noble gas released during the previous month or a representative analysis of the gaseous effluent. Table 1 source terms may be used if the Stack releases for the previous month were below the lower limits of detection (LLD).

b. Determine S_i, the fraction of the total radioactivity in the gaseous effluent comprised by noble gas radionuclide "i", for each individual noble gas radionuclide in the gaseous effluent.

$$S_i = \frac{A_i}{\sum_i A_i} \qquad 2.1\text{-}5$$

where

A_i = The radioactivity of noble gas radionuclide "i" in the gaseous effluent.

2. Determine Q_t, the maximum acceptable total release rate of all noble gas radionuclides in the gaseous effluent (μCi/sec), based upon the whole body exposure limit (500 mrem/yr).

$$Q_t = \frac{500}{\sum_i V_i S_i} \qquad 2.1\text{-}6$$

NOTE: For short-term batch releases (equal to or less than 500 hrs/yr) via drywell purging, substitute v_i for V_i in Equation 2.1-6.

where

V_i = The constant for long-term releases (greater than 500 hr/yr) for noble gas radionuclide "i" accounting for the gamma radiation from the elevated finite plume (mrem/year/μCi/sec) from Table 2.

v_i = The constant for short-term releases (equal to or less than 500hr/yr) for noble gas radionuclide "i" accounting for the gamma radiation from the elevated finite plume (mrem/yr/μCi/sec) from Table 2.

3. Determine Q_t based upon the skin exposure limit (3000 mrem/yr).

$$Q_t = \frac{3000}{\Sigma_i (L_i (\chi/Q)_s + 1.1B_i) S_i} \qquad 2.1\text{-}7$$

NOTE: For short-term batch releases (equal to or less than 500 hours per year) via drywell purging, use the short-term $(\chi/q)_s$ value and substitute b_i for B_i in Equation 2.1-7.

where

$L_i(\chi/Q)_s + 1.1B_i$ = The total skin dose constant for long-term releases (greater than 500 hours per year) due to emissions from noble gas radionuclide "i", Table 2, (mrem/year/μCi/sec);

$L_i(\chi/q)_s + 1.1b_i$ = The total skin dose constant for short-term releases (less than or equal to 500 hours per year) due to emissions from noble gas radionuclide "i", Table 2, (mrem/year/μCi/sec).

4. Determine HHSP (the monitor high-high alarm setpoint above background (μCi/sec).

NOTE: Use the lower of the Q_t values obtained in sections 2.1.1.B.2. and 2.1.1.B.3.

$$HHSP = 0.50\ Q_t \qquad 2.1\text{-}8$$

0.50 = Fraction of the total radioactivity from the site via the monitored release point to ensure that the site boundary limit is not exceeded due to simultaneous releases from several release points.

2.1.2 Accident Monitors

The gross radioactivity in noble gases removed from the main condenser by means of steam jet air ejectors as measured prior to entering the treatment, adsorption, and delay systems ***SHALL*** be limited by an alarm setpoint for the Offgas Monitor.

This procedure determines the monitor alarm setpoint that indicates if the potential body accident dose to an individual at or beyond the site boundary due to noble gas radionuclides in the gaseous effluent released from the site exceeds a small fraction of the limits specified in 10CFR100 in the event this effluent, including the radioactivity accumulated in the treatment system, is inadvertently discharged directly to the environment without treatment. This calculation is performed by the OFFGAS computer program on a routine or an as needed basis. Offgas flow is automatically terminated when this setpoint is reached.

A. Maximum Release Rate

Determine Q_t, the maximum acceptable total release rate in μCi/sec of all noble gas radionuclides in the gaseous effluent at the Offgas Monitor after a 5-minute decay, based on the maximum acceptable total release rate of 2.60E5 μCi/sec after a 30-minute decay.

1. Determine the offgas mixture of the gaseous effluent. The offgas mixture is the fraction of the offgas noble gas radioactivity caused by each recoil diffusion, and equilibrium component. The offgas mixture is determined at least once per month.

2. Determine Q_t based on the offgas mixture using Table 3. This table was prepared using a variation of the EBARR computer code.

B. Maximum Concentration

Determine C_t, the maximum acceptable total radioactivity concentration of all noble gas radionuclides in the gaseous effluent (μCi/cc).

$$C_t = 2.12\ E\text{-}03\ \frac{Q_t}{f} \qquad 2.1\text{-}9$$

where

f = The maximum acceptable effluent flowrate at the point of release (cfm);

= 85.5 cfm.

C. Monitor Reading

Determine C.R., the calculated monitor reading above background attributed to the noble gas radionuclides (mR/hr).

$$C.R. = \frac{C_t}{E} \qquad 2.1\text{-}10$$

where

E = The detection efficiency of the monitor for noble gas radionuclides represented in main condenser offgas (μCi/cc/mR/hr) from Plant Chemistry Surveillance procedures.

D. Monitor High High Setpoint

The monitor high-high alarm setpoint above background (mr/hr) should be set at or below the C.R. value.

2.1.3 Offgas Storage Tank Maximum Activity

The maximum activity in each storage tank is limited to less than 22,000 curies of noble gas (considered as dose equivalent Xe-133) after 12 hours of holdup. To verify that this limit is not exceeded, Table 3 is used.

The gross radioactivity of noble gases from the main condenser air ejector is determined by isotopic analysis monthly and whenever a significant increase in offgas activity is noted. Analysis of this data is used to determine the primary mode of fission product release from the fuel (recoil, equilibrium, or diffusion) and the gross release rate. This information combined with the condenser air inleakage rate (cfm) and the air ejector monitor release rate is used to confirm that the maximum tank contents limit is not exceeded. This calculation is performed by the OFFGAS computer program on a routine or as needed basis.

Table 3 is entered with the offgas mixture (fraction recoil, diffusion, and equilibrium rounded to one decimal place) and the air inleakage rate (in cfm). The resulting tank activity is multiplied by the current total release rate after a 30 minute decay (μCi/sec) and divided by the maximum permitted air ejector release rate of 260,000 μCi/sec. Linear interpolation of air inleakage is used.

As noted earlier, Table 3 is derived from the EBARR computer program described in Section 2.4. It is extremely unlikely that the maximum tank activity limit will be exceeded.

2.2 Gaseous Effluent Dose Rate - Compliance With 10CFR20

Dose rates resulting from the release of noble gases, and from radioiodines and particulates must be calculated to show compliance with 10CFR20. The dose rate limits of 10CFR20 are conservatively applied on an instantaneous basis at the hypothetical worst case location.

2.2.1 Noble Gases

The dose rate in unrestricted areas resulting from noble gas effluents is limited to 500 mrem/yr to the total body and 3000 mrem/yr to the skin. The setpoint determinations discussed in the previous section are based on the dose rate calculation method presented in NUREG-0133[4]. This represents a backward solution to the limiting dose rate equations in NUREG-0133. Setting alarm trip setpoints in this manner will ensure that the limits of 10CFR20 are met for noble gas releases. Therefore, no routine dose rate calculations for noble gases will be needed to show compliance with this part. Routine calculations are made for dose rates from noble gas releases to show compliance with 10CFR50, Appendix I by performing the DOSGAS computer program.

2.2.2 Radioiodine and Radioactive Particulates and Other Radionuclides

The dose rate in unrestricted areas resulting from the release of radioiodines and particulates with half lives greater than 8 days is limited by 10CFR20 to 1500 mrem/yr to any organ. The calculation of dose rate from radioiodines and particulates is performed for drywell purges prior to the release and weekly for all releases. This calculation is performed by the DWCAL computer program for drywell purges and 1/week by the IPART computer program for all releases. The calculations are based on the results of analyses obtained pursuant to Surveillance Requirement 3.1.4.B. To show compliance with 10CFR20, Equation 2.2-1 will be evaluated for I-131, I-133, tritium, and radioactive particulates with half lives greater than eight days.

$$\Sigma P_{i_I} [\chi/Q_v) Q_{iv} + (\chi/Q_s) Q_{is}] < 1500 \text{ mrem/yr} \qquad 2.2\text{-}1$$

where

P_{i_I} = child critical organ dose parameter for radionuclide i for the inhalation pathway, mrem/yr per $\mu Ci/m^3$; (Table 4)

$(\chi/Q)_v$ = annual average relative concentration for long-term release from the Reactor Building vent at the critical location, sec/m^3 (Appendix A, Table 3);

$(\chi/Q)_s$ = annual average relative concentration for long-term releases from the offgas stack at the critical location, sec/m3 (Appendix A, Table 6);

Q_{iv} = the release rate of radionuclide i from the Reactor Building vent for the week of interest, μCi/sec;

Q_{is} = the release rate of radionuclide i from the offgas stack for the week of interest, μCi/sec.

The χ/Q values presented in Appendix A, Tables 3 and 6 have been calculated using the USNRC computer code "XOQDOQ"[5]. Dose rate calculations using Equation 2.2-1 are made once per week. The source terms Q_{iv} and Q_{is} are determined from the results of analysis of weekly stack and Reactor Building particulate filters and charcoal cartridges. These source terms include all gaseous releases from MNGP. They are recorded and reported as the total dose for compliance with 10CFR20.

Radioiodines and particulates may be released from both the offgas stack and the Reactor Building vent. As specified in NUREG-0133, the critical receptor location is identified based on the Reactor Building vent χ/Q.

A component of the total stack or vent source term may be due to short term releases occurring as a result of containment drywell purging. Dose rate calculations are made on this component separately to further assure compliance with 10CFR 20 prior to release. The calculated dose rate is used only to determine whether or not the drywell can be purged. All dose rates from drywell purges will be accounted for and reported through the weekly calculations discussed above. Release rates are determined from the results of analyses of samples from the drywell.

The term Q_{is} for the calculation of drywell purge dose rate is determined by multiplying the concentration of each nuclide in the drywell by the rate of release. Credit will be taken for the expected reduction in radionuclide concentration due to use of the standby gas treatment system. Equation 2.2-2 is used to calculate purge dose rates. Only one source term is used depending on the release point (stack or Reactor Building vent). Short term values of χ/q from Appendix A, Table 9 or Table 12 are used in the purge dose rate calculation. the limiting dose rate limit for each purge is determined using:

$$BL = 1500 - (D_{cv} + D_{cs} - D_{dw}) \qquad 2.2\text{-}2$$

where

BL = limiting dose rate for the batch, mrem/yr;

D_{cv} = previous week's dose rate from Reactor Building continuous and batch releases, mrem/yr;

D_{cs} = previous week's dose rate from offgas stack continuous and batch releases, mrem/yr;

D_{dw} = previous week's total dose rate from drywell purge releases, mrem/yr, for the purge release point.

Although mechanical vacuum pump releases are batch mode, they cannot be sampled prior to release. For this reason, no prerelease dose rate calculations can be made from this source. Experience has shown mechanical vacuum pump release to be well within 10CFR20 limits.

2.2.3 Critical Receptor Identification

As stated in 5.2.1 of NUREG-0133, when the critical receptor is different for stack and vent releases, the controlling location for vent releases should be used. For this reason, the Reactor Building vent dispersion parameters are used to identify the critical receptor. The real time atmospheric dispersion factor (χ/Q) is calculated by performing the MIDAS XP computer program IAW MNGP Chemistry Procedure I.06.07. As discussed previously, weekly and batch dose rate calculations are performed for the critical boundary location. The critical boundary location is based on reactor vent long term χ/Q (Appendix A, Table 3) is 0.43 miles in the SSE sector.

2.3 Gaseous Effluents - Compliance With 10CFR50

Doses resulting from the release of noble gases, and radioiodines and particulates must be calculated to show compliance with Appendix I of 10CFR50. The calculations are performed monthly for all gaseous effluents. Calculations of the doses received due to the release of noble gases is performed by the DOSGAS computer program. Similarly the dose received due to the release of radioiodines and particulates is calculated by the DOSPIT computer program. These two programs are performed monthly or as required.

This section describes the methods and equations used at MNGP to perform the dose evaluation using manual methods based on historical meteorological dispersion parameters.

2.3.1 Noble Gases

The air dose in unrestricted areas at MNGP is limited to:

A. for any calendar quarter:

$D_\gamma \leq$ 5 mrad due to gamma radiation; and
$D_\beta \leq$ 10 mrad due to beta radiation; and

B. for any calendar year:

$D_\gamma \leq$ 10 mrad due to gamma radiation; and
$D_\beta \leq$ 20 mrad due to beta radiation.

Air doses may be calculated using historical meteorological data using the highest normalized concentration statistics as the best estimator of the atmospheric dispersion.

A. Air Dose Based on Historical Meteorology

The limiting air dose, D, based on historical meteorology is based on the critical receptor in the unrestricted area. For air doses the critical receptor is described by the off-site location with the highest long term annual average relative concentration (χ/Q) at or beyond the restricted area boundary. For short-term vent releases (less than 500 hours per year), the location with the highest short-term average relative concentration (χ/q) is chosen. The critical receptor is described in section 2.3.5.

For gamma radiation, the air dose is given by:

$$D_\gamma = 3.17 \times 10^{-8} \sum_i (M_i[(\chi/Q)_v Q_{iv} + (\chi/q)_v q_{iv}] + B_i Q_{is} + b_i q_{is})$$

The historical meteorological data base is the basis for the method described in the original MNGP ODCM.

For beta radiation, the air dose is:

$$D_\beta = 3.17 \times 10^{-8} \sum_i N_i \left[(\chi/Q)_v Q_{iv} + (\chi/q)_v q_{iv} + (\chi/Q)_s Q_{is} + (\chi/q)_s q_{is}\right]$$

2.3-2

where

M_i = The air dose factor due to gamma emission for each identified noble gas radionuclide i, mrad/yr per $\mu Ci/m^3$; (Table 5)

N_i = the air dose factor due to beta emissions for each identified noble gas radionuclide i, mrad/yr per $\mu Ci/m^3$; (Table 5)

$(\chi/Q)_v$ = the annual average relative concentration for areas at or beyond the site boundary for long-term Reactor Building vent releases (greater than 500 hr/yr), sec/m³, (Appendix A, Table 3);

$(\chi/q)_v$ = the relative concentration for areas at or beyond the site boundary for short-term Reactor Building vent releases (equal to or less than 500 hr/yr), sec/m³, (Appendix A, Table 12);

$(\chi/Q)_s$ = the annual average relative concentration for areas at or beyond the site boundary for long-term offgas stack releases (greater than 500 hr/yr), sec/m³ (Appendix A, Table 6);

$(\chi/q)_s$ = the relative concentration for areas at or beyond the site boundary for short-term offgas stack releases (equal to or less than 500 hr/yr), sec/m³ (Appendix A, Table 9);

q_{is} = the average release of the noble gas radionuclide i in gaseous effluents for short-term offgas stack releases (equal to or less than 500 hr/yr), μCi;

q_{iv} = the average total release of the noble gas radionuclide i in gaseous effluents for short-term Reactor Building vent releases (equal to or less than 500 hr/yr), μCi;

Q_{is} = the total release of noble gas radionuclide i in gaseous releases for long-term offgas stack releases (greater than 500 hr/yr), μCi;

Q_{iv} = the total release of noble gas radionuclide i in gaseous effluents for long-term Reactor Building vent releases (greater than 500 hr/yr), μCi;

B_i = the constant for long-term releases (greater than 500 hr/yr) for each identified noble gas radionuclide i accounting for the gamma radiation from the elevated finite plume, mrad/yr per μCi/sec (Table 6);

b_i = the constant for short-term releases (less than or equal to 500hr/yr) for each identified noble gas radionuclide i accounting for the gamma radiation from the elevated finite plume, mrad/yr per μCi/sec (Table 6);

$3.17 \times 10_{-8}$ = the inverse of the number of seconds in a year.

Noble gases are continuously released from the Reactor Building vent and the plant stack. These long-term releases rates are determined from the continuous noble gas monitor readings and periodic radionuclide analyses. There are infrequent containment purges from either release point. To separate the short-term release from the long term release (the continuous monitor records both), the drywell source term should be subtracted from the total source term whenever a purge release occurs. Periodic radionuclide analysis of main condenser offgas and radionuclide analysis of each purge prior to release are used in conjunction with the total activity measured by the monitor to quantify individual noble gas nuclides released.

Long-term and short-term χ/Q's are given in Appendix A for both the Reactor Building vent and the plant stack. Short-term χ/q's were calculated using the USNRC computer code "XOQDOQ" assuming 144 hours per year drywell purge. Values of M and N were calculated using the methodology presented in NUREG-0133 and are given in Table 5. Table 6 presents values of B_i and b_i calculated using the USNRC computer code "RABFIN." This code was also used to calculate values of V_i presented in section 1.0. Values of v_i, were calculated by multiplying V_i by the ratio of b_i to B_i. The v_i, iB_i, and b_i values of Table 6 are the maximum values for the site boundaries location. This location, 0.51 mi SSE, is different than the critical site boundary location based upon the Reactor Building vent χ/Q.

2.3.2 Radioiodine, Particulates, and Other Radionuclides

The dose, D_{aj}, to an individual from radioiodines, radioactive materials in particulate form and radionuclides other than noble gases with half lives greater than eight days in gaseous effluents released to unrestricted areas ***SHALL*** be limited to:

$D_{aj} \leq$ 7.5 mrem for any calendar quarter

$D_{aj} \leq$ 15 mrem for any calendar year

These limits apply to the receptor location where the combination of existing pathways and age groups indicates the maximum exposure.

A. Dose from Radioiodines and Particulates Based on Historical Meteorology

The worst case dose to an individual from I-131, tritium and radioactive particulates with half-lives greater than eight days in gaseous effluents released to unrestricted areas is determined by the following expressions:

$$D_{aj} = 3.17 \times 10^{-8} \sum_{pi}\sum R_{iapj} [W_v Q_{iv} + W_v q_{iv} + W_s Q_{is} + W_s q_{is}] \qquad 2.3\text{-}3$$

where

Q_{is} = release of radionuclide i for long-term offgas stack releases (greater than 500 hr/yr), μCi;

Q_{iv} = release of radionuclide i for long-term Reactor Building vent releases (greater than 500 hr/yr), μCi;

q_{is} = release of radionuclide i for short-term offgas stack purge releases (equal to or less than 500 hr/yr); μCi;

q_{iv} = release of radionuclide i for short-term Reactor Building vent purge releases (equal to or less than 500 hr/yr); μCi;

W_s = the dispersion parameter for estimating the dose to an individual at the controlling location for long-term offgas stack releases (greater than 500 hr/yr), sec/m^3 or m^{-2};

W_v = the dispersion parameter for estimating the dose to an individual at the controlling location for long-term Reactor Building vent releases (greater than 500 hr/yr), sec/m^3 or m^{-2};

W_s = the dispersion parameter for estimating the dose to an individual at the controlling location for short-term offgas stack releases (equal to or less than 500 hr/yr), sec/m^3 or m^{-2};

W_v = the dispersion parameter for estimating the dose to an individual at the controlling location for short-term Reactor Building vent releases (equal to or less than 500 hr/yr), sec/m^3 or m^{-2}

3.17×10^{-8} = the inverse of the number of seconds in a year.

R_{iapj} = the dose factor for each identified radionuclide i, pathway p, age group a, and organ j, m^2 mrem/yr per μCi/sec or mrem/yr per μCi/m^3.

The above equation is applied to each combination of age group and organ. Values of R_{iapj} have been calculated using the methodology given in NUREG-0133 and are given in Tables 7 through 25. The equation is applied to a controlling location which will be one of the following:

A. residence,

B. vegetable garden,

C. milk animal.

The selection of the actual receptor is discussed in section 2.3.5. The W values are in terms of χ/Q (sec/m^3) for the inhalation pathways and for tritium and in terms of D/Q (m^{-2}) for all other pathways.

Section 2.5.2 contains the methodology for calculating R_{iapj} values. This method will be used to compute dose factors for nuclides not tabulated in Tables 7 through 25 if they are encountered.

2.3.3 Cumulation of Doses

Doses calculated monthly are summed for comparison with quarterly and annual limits. The monthly results are added to the doses cumulated from the other months in the quarter of interest and in the year of interest and compared to the limits given in section 2.3.1 and 2.3.2. This summation is performed by the DOSGAS and the DOSPIT computer programs for doses from exposures due to noble gas, and radioiodine and particulates respectively. If these limits are exceeded, a Special Report will be submitted to the USNRC. If twice the limits are exceeded, a Special Report showing compliance with 40CFR190[9] will be submitted.

2.3.4 Projection of Doses

Projection of doses is not necessary. The ODCM requires the offgas holdup system to be operated at all times.

2.3.5 Critical Receptor Identification

The critical receptors for compliance with 10CFR50, Appendix I will be identified. For the noble gas specification the critical location is based on the external dose pathway only. This location is the off-site location with the highest long-term Reactor Building vent χ/Q and is selected using the χ/Q values given in Appendix A, Table 4. The critical receptor location is used for showing compliance with 10CFR20 and remains the same unless meteorological data is re-evaluated or the site boundary changes.

The critical location for the radioiodine and particulate pathway is selected once per year. This selection follows the annual land use census performed within 5 miles of the MNGP. Each of the following locations is evaluated as a potential critical receptor before implementing the effluent technical specifications:

A. Residences in each sector.

B. Vegetable garden producing leafy green vegetables.

C. All identified milk animal locations.

The critical receptor is selected based on this evaluation.

Following the annual survey, doses are calculated using Equation 2.3-3 for all newly identified receptors and those receptors whose characteristics have changed significantly. The calculation includes appropriate information shown to exist at each location. The dispersion parameters given in this manual should be employed. The total releases reported for the previous calendar year should be used as the source term.

2.4 Summary of EBARR Computer Program

The basic task performed by EBARR is to predict the offgas composition and activity at various stages of waste gas treatment and at the time of release (Table 26). The basic data supplied to EBARR consists of the release rate, in μCi/sec measured at the SJAE, of six readily measurable fission product noble gases: Xe-133, Xe-135, Kr-85M, Kr-88, Kr-87, and Xe-138. There are nine other noble gases of interest from a radioactive effluent point of view. They are: Kr-90, Xe-139, Kr-89, Xe-137, Xe-135m, Kr-83m, Xe-133m, Xe-131m, and Kr-85. Many of these nine gases are not directly measurable in the presence of the others. By establishing the offgas release mode from the six measured release rates, EBARR computes the release rates of the other nine gases known to be present.

The first step performed by EBARR is to correct the release rates of the six measured noble gases for decay during their transit from the reactor vessel to the SJAE:

$$A_i(0) = A_i(t_{dly})\ e^{\lambda_i t_{dly}} \qquad 2.4\text{-}1$$

where

$A_i(t)$ = release rate of noble gas i at the time t after leaving reactor, μCi/sec;

t_{dly} = transit time from reactor to SJAE, sec;

λ_i = decay constant of noble gas i, sec^{-1}.

EBARR then uses a least square fitting routine to determine the values of B_1, B_2, and B_3 giving the best fit to $A_1(0)$ through $A_6(0)$ in the equation:

$$\log\left|\frac{A_i}{y_i\lambda_i}\right| = \log\left|B_1 + \frac{B_2}{\sqrt{\lambda_i}} + \frac{B_3}{\lambda_i}\right| \qquad 2.4\text{-}2$$

where

y_i = fraction of all fissions yielding noble gas i.

This equation consists of three terms; a recoil release mode term, a diffusion release mode term, and an equilibrium release mode term. This is the standard General Electric offgas distribution model.

The values of B_1, B_2, and B_3, are used by EBARR to characterize the offgas release mechanism in terms of percent recoil, percent diffusion, and percent equilibrium type release. This characterization is useful in fuel performance evaluation. The equation for these three fractions are:

$$\% \text{ Recoil} = 100 \times \frac{\sum_{i=1,6} B_1 y_i \lambda_i}{\sum_{i=1,6} (B_1 y_i \lambda_i + B_2 y_i \sqrt{\lambda_i} + B_3 y_i)} \qquad 2.4\text{-}3$$

$$\% \text{ Diffusion} = 100 \times \frac{\sum_{i=1,6} B_2 y_i \sqrt{\lambda_i}}{\sum_{i=1,6} (B_1 y_i \lambda_i + B_2 y_i \sqrt{\lambda_i} + B_3 y_i)} \qquad 2.4\text{-}4$$

$$\% \text{ Equilibrium} = 100 \times \frac{\sum_{i=1,6} B_3 y_i}{\sum_{i=1,6} (B_1 y_i \lambda_i + B_2 y_i \sqrt{\lambda_i} + B_3 y_i)} \qquad 2.4\text{-}5$$

The release rate from the reactor vessel for the nine noble gases not measured is then:

$$A_i(0) = B_1 y_i \lambda_i + B_2 y_i \sqrt{\lambda_i} + B_3 y_i \qquad 2.4\text{-}6$$

At any time, t, after leaving the reactor vessel the release rate is:

$$A_i(t) = A_i(0)\, e^{-\lambda_i t_i} \text{, for } i = 3 \text{ through } 14 \qquad 2.4\text{-}7$$

and

$$A_i(t) = A_i(0)\, e^{-\lambda_i t} + \frac{\alpha_i \lambda_i A_j(0)}{\lambda_i - \lambda_j} \left(e^{-\lambda_j t} - e^{-\lambda_i t}\right) \text{, for } 1 = 1, 2, \text{ and } 15 \qquad 2.4\text{-}8$$

where

α_i = fraction of disintegrations of isotope j producing isotope i.

Equation (2.4-8) contains an additional factor to account for the decay of Xe-131m to Xe-133, Xe-135m to Xe-135, and Kr-85m to Kr-85. This factor is normally small.

As shown in Table 26, the plant stack noble gas release consists of three components:

A. main condenser non-condensibles;

B. gland exhaust; and

C. stack dilution air drawn from Reactor and Turbine Buildings.

Source C is considered to be negligible compared to sources A and B. The composition of the gland exhaust release is assumed to be identical to the offgas mixture at the SJAE. Therefore, the stack release rate of isotope i is:

$$R_i(t) = A_i(t) + F_{loc}A_i(t_{dly}) \qquad 2.4\text{-}9$$

where

F_{loc} = fraction of main steam flow diverted to gland seal steam supply and the total noble gas release rate at any time is:

$$R_{tot}(t) = \sum_{i=1,\,15} [A_i(t) + F_{loc}A_i\,(t_{dly})] \qquad 2.4\text{-}10$$

EBARR also performs a secondary task of computing the compressed offgas storage tank contents in terms of dose equivalent Xe-133. Control 2.4.1.B in ODCM-03.01 limits this quantity to 22,000 Curies 12 hours after placing a tank in storage (when the discharge valve interlock permits the tank to be released).

Prior to reaching the storage tanks (Table 26), the offgas stream is delayed several hours flowing from the recombiners to the compressors via the 42-inch holdup pipe. Offgas reaching the tanks is therefore delayed by:

$$t_{ddly} = t_{dly} + \frac{P_{42}V_{42}}{P_aL} \qquad 2.4\text{-}11$$

where

V_{42} = 42-inch pipe volume;

P_{42} = 42-inch pipe pressure;

L = total air inleakage, SCFM, (Bleed air and condenser inleakage);

P_a = atmospheric pressure.

While a tank is being filled, offgas enters the tank at rate L. The activity of each isotope in the tank, C_i, is a function of time from the start of filling, t_f, is computed by EBARR using.

$$C_i(t_f) = \frac{A_i(t_{ddly})}{\lambda_i} \left(1 - e^{-\lambda_i t_f}\right) \text{ for } i = 3 \text{ to } 14 \qquad 2.4\text{-}12$$

and

$$C_i(t_f) = \frac{A_i(t_{ddly})}{i} \left(1 - e^{-\lambda_i t_f}\right) + \frac{\alpha_i \lambda_i A_j(t_{ddly})}{\lambda_j} \left[\frac{e^{-\lambda_i t_f} - e^{-\lambda_j t_f}}{\lambda_i - \lambda_j} + \frac{1 - e^{-\lambda_i t_f}}{\lambda_i}\right]$$

$$\text{for } i = 1, 2, \text{ and } 15 \qquad 2.4\text{-}13$$

Equation 2.4-13 contains an additional factor to account for the decay of Xe-133m to Xe-133, Xe-135m to Xe-135, and Kr-85m to Kr-85. This factor is normally small.

Pressure builds up in the tank at the rate:

$$p(t_f) = \frac{t_f L P_a}{V_{tk}} \qquad 2.4\text{-}14$$

where

V_{tk} = volume of storage tank.

When the pressure in the tank reaches the design value, P_{max}, at t_{fill}, EBARR assumes the tank is full. Total tank activity, C, and total tank Xe-133 dose equivalent activity, D, is computed at t_{rel} when the interlock on the tank discharge valve permits the tank to be released after an additional delay of t_{intk}:

$$t_{fill} = \frac{P_{max} V_{tk}}{P_a L} \qquad 2.4\text{-}15$$

$$t_{rel} = t_{fill} + t_{intk} \qquad 2.4\text{-}16$$

$$C_i(t_{rel}) = C_i(t_{fill})\, e^{-\lambda_i t_{intk}} \text{, for } i = 3 \text{ through } 14 \qquad 2.4\text{-}17$$

and

$$C_i(t_{rel}) = \left(C_i(t_{fill})\, e^{-\lambda_i t_{intk}} + \frac{\alpha_i \lambda_i C_j(t_{fill})}{\lambda_i - \lambda_j} \left(e^{-\lambda_j t_{intk}} - e^{-\lambda_i t_{intk}}\right)\right) \text{ for } i = 1, 2, \text{ and } 15$$

2.4-18

$$C(t_{rel}) = \sum_{i=1,15} C(t_{rel}) \qquad 2.4\text{-}19$$

$$D(t_{rel}) = \frac{\sum_{i=1,15} C_i(t_{rel})\, K_i}{K_i} \qquad 2.4\text{-}20$$

where

K_i = value of K_i for Xe-133 (i = 1) from Table 5.

The minimum offgas holdup time is:

$$t_{holdup} = t_{ddly} + t_{rel} \qquad 2.4\text{-}21$$

When the system is operating normally; however, with all five holdup tanks in service, the holdup time is given by:

$$t_{holdup} = t_{ddly} + 4\, t_{fill} \qquad 2.4\text{-}22$$

2.5 Dose Parameters for Radioiodines, Particulates and Tritium

This section contains the methodology which was used to calculate the dose parameters for radioiodines, particulates, and tritium to show compliance with 10CFR20 and Appendix I of 10CFR50 for gaseous effluents. These dose parameters, P_i and R_i were calculated using the methodology outlines in NUREG-0133 along with Regulatory Guide 1.109 Revision 1. The following sections provide the specific methodology which was utilized in calculating the P_i and R_i values for the various exposure pathways.

2.5.1 Calculation of P_i

The parameter, P_i, contained in the radioiodine and particulates portion of Section 2.2, includes pathway transport parameters of the ith radionuclide, the receptor's usage of the pathway media and the dosimetry of the exposure. Pathway usage rates and the internal dosimetry are functions of the receptor's age; however, the child age group will always receive the maximum dose under the exposure conditions assumed.

A. Inhalation Pathway

$$P_{i_I} = K' (BR) DFA_i \qquad 2.5\text{-}1$$

where

P_{i_I} = dose parameter for radionuclide i for the inhalation pathway, mrem/yr per $\mu Ci/m^3$;

K' = a constant of unit conversion,

= 10^6 pCi/μCi;

BR = the breathing rate of the child age group, m^3/yr

DFA_i = the maximum organ inhalation dose factor for the child age group for radionuclide i, mrem/pCi.

The age group considered is the child group. The child's breathing rate is taken as 3700 m^3/yr from Table E-5 of Regulatory Guide 1.109 Revision 1. The inhalation dose factors for the child, DFA_i, are presented in Table E-9 of Regulatory Guide 1.109 in units of mrem/pCi. The total body is considered as an organ in the selection of DFA_i.

The incorporation of breathing rate of the child and the unit conversion factor results in the following:

$$P_{i_l} = 3.7E9 \times DFA_i \qquad 2.5\text{-}2$$

2.5.2 Calculation of R_i

The radioiodine and particulate Control 2.3.1.A. is applicable to the location in the unrestricted area where the combination of existing pathways and receptor age groups indicates the maximum potential exposure occurs. The inhalation and ground plane exposure pathways ***SHALL*** be considered to exist at all locations. The grass-goat-milk, the grass-cow-milk, grass-cow-meat, and vegetation pathways are considered based on their existence at the various locations. R_i values have been calculated for the adult, teen, child, and infant age groups for the ground plane, cow milk, goat milk, vegetable and beef ingestion pathways. The methodology which was utilized to calculate these values is presented below.

A. Inhalation Pathway

$$R_{i_l} = K'(BR)_a\,(DFA_i)_a \qquad 2.5\text{-}3$$

where

R_{i_l} = dose factor for each identified radionuclide i of the organ of interest, mrem/yr per $\mu Ci/m^3$;

K' = a constant of unit conversion,

= 10^6 pCi/μCi;

$(BR)_a$ = breathing rate of the receptor of age group a, m^3/yr;

$(DFA_i)_a$ = organ inhalation dose factor for radionuclide i for the receptor of age group a, mrem/pCi.

The breathing rates $(BR)_a$ for the various age groups are tabulated below, as given in Table E-5 of the Regulatory Guide1.109 Revision 1.

Age Group (a)	Breathing Rate (m^3/yr)
Infant	1400
Child	3700
Teen	8000
Adult	8000

Inhalation dose factors $(DFA_i)_a$ for the various age groups are given in Tables E-7 through E-10 of Regulatory Guide 1.109 Revision 1.

B. Ground Plane Pathway

$$R_{iG} = \frac{I_i K' K'' (SF) DFG_i \, (1-e^{-\lambda t})}{\lambda_i} \qquad 2.5\text{-}4$$

where

R_{iG} = dose factor for the ground plane pathway for each identified radionuclide i for the organ of interest; mrem/yr per μCi/sec per m^{-2};

K' = a constant of unit conversion,

= 10^6 pCi/μCi;

K'' = a constant of unit conversion,

= 8760 hr/yr;

λ_i = the radiological decay constant for radionuclide i, sec^{-1};

t = the exposure time, sec,

= 4.73×10^8 sec (15 years);

DFG_i = the ground plane dose conversion factor for radionuclide i,

mrem/hr per pCi/m^2

SF = the shielding factor (dimensionless);

I_i = factor to account for fractional deposition of radionuclide i.

For radionuclides other than iodine, the factor I_i is equal to one. For radioiodines, the value of I_i may vary. However, a value of 1.0 was used in calculating the R values in Table 7.

A shielding factor of 0.7 is suggested in Table E-15 of Regulatory Guide 1.109 Revision 1. A tabulation of DFG_i values is presented in Table E-6 of Regulatory Guide 1.109 Revision 1.

C. Grass-Cow or Goat-Milk Pathway

$$R_{i_M} = I_i K' Q_F U_{ap} F_m (DFL_i)_a e^{-\lambda_i t_f} \left[f_p f_s \left[\frac{r(1-e^{-\lambda_{E_i} t_{ep}})}{Y_p \lambda_{E_i}} + \frac{B_{iv}(1-e^{\lambda_i t_b})}{p\lambda_i} \right] + (1-f_p f_s) \left[\frac{r(1-e^{-\lambda_{E_i} t_{es}})}{Y_s \lambda_{E_i}} + \frac{B_{iv}(1-e^{\lambda_i t_b})}{p\lambda_i} \right] e^{-\lambda_i t_h} \right] \qquad 2.5\text{-}5$$

where

R_{i_M} = dose factor for the cow milk or goat milk pathway, for each identified radionuclide i for the organ of interest, mrem/yr per μCi/sec per m^{-2};

K' = a constant of unit conversion,

= 10^6 pCi/μCi;

Q_F = the cow or goat feed consumption rate, kg/day (wet weight);

U_{ap} = the receptor's milk consumption rate for age group a, liters/yr;

Y_p = the agricultural productivity by unit area of pasture feed grass, kg/m^2

Y_s = the agricultural productivity by unit area of stored feed, kg/m^2

F_m = the stable element transfer coefficients, pCi/liter per pCi/day;

r = fraction of deposited activity retained on cow feed grass;

$(DFL_i)_a$ = the organ ingestion dose factor for radionuclide i for the receptor in age group a, mrem/pCi;

λ_{E_i} = $\lambda_i + \lambda_w$

λ_i = the radiological decay constant for radionuclide i, sec^{-1}

λ_w = the decay constant for removal of activity on leaf and plant surfaces by weathering, sec^{-1},

= 5.73×10^{-7} sec^{-1} (corresponding to a 14 day half-life);

t_f = the transport time from feed to cow or goat, to milk, to receptor, sec;

t_h = the transport time from harvest, to cow or goat, to consumption, sec;

t_b = period of time that activity builds up in soil, sec;

B_{iv} = concentration factor for uptake of radionuclide i from the soil by the edible parts of crops, pCi/kg (wet weight) per pCi/kg (dry soil);

P = effective surface density for soil, kg (dry soil)/m^2;

f_p = fraction of the year that the cow or goat is on pasture;

f_s = fraction of the cow feed that is pasture grass while the cow is on pasture;

t_{ep} = period of pasture grass and crop exposure during the growing season, sec;

t_{es} = period of crop exposure during the growing season (stored feed); sec;

I_i = factor to account for fractional deposition of radionuclide i.

For radionuclides other than iodine, the factor I_i is equal to one. For radioiodines, the value of I_i may vary. However, a value of 1.0 was used in calculating the R values Tables 14 through 21.

Milk cattle and goats are considered to be fed from two potential sources, pasture grass and stored feeds. Following the development in Regulatory Guide 1.109 Revision 1, the value of f_s is considered unity in lieu of site-specific information. The value of f_p is 0.500 based upon an 6 month grazing period.

Appendix C, Table 1 contains the appropriate parameter values and their source in Regulatory Guide 1.109 Revision 1.

The concentration of tritium in milk is based on the airborne concentration rather than the deposition. Therefore, the R_i is based on χ/Q:

$$R_{T_M} = K'K'''F_m Q_F U_{ap} (DFL_i)_a \; 0.75(0.5/H) \qquad 2.5\text{-}6$$

where

R_{T_M} = dose factor for the cow or goat milk pathway for tritium for the organ of interest, mrem/yr per mCi/m^3;

K''' = a constant of conversion,

= 10^3 gm/kg;

H = absolute humidity of the atmosphere, gm/m^3;

0.75 = the fraction of total feed that is water;

0.5 = the ratio of the specific activity of the feed grass water to the atmospheric water;

and the other parameters and values are as given above. A value for H of 8 grams/m^3, was used in lieu of site-specific information.

D. Grass-Cow-Meat Pathway

The integrated concentration in meat follows in a similar manner to the development for the milk pathway, therefore:

$$R_{i_B} = I_i K' Q_F U_{ap} F_m (DFL_i)_a \, e^{-\lambda_i t_f} \left[f_p f_s \left[\frac{r(1-e^{-\lambda_{E_i} t_{ep}})}{Y_p \lambda_{E_i}} + \frac{B_{iv}(1-e^{-\lambda_i t_b})}{p\lambda_i} \right] + (1-f_p f_s) \left[\frac{r(1-e^{-\lambda_{E_i} t_{es}})}{Y_s \lambda_{E_i}} + \frac{B_{iv}(1-e^{-\lambda_i t_b})}{p\lambda_i} \right] e^{-\lambda_i t_h} \right] \qquad 2.5\text{-}7$$

where

R_{i_B} = dose factor for the meat ingestion pathway for radionuclide i for any organ of interest, mRem/yr per μCi/sec per m^{-2};

F_f = the stable element transfer coefficient, pCi/kg per pCi/day;,

U_{ap} = the receptor's milk consumption rate for age group a, liters/yr;

t_s = the transport time from slaughter to meat consumption, sec;

t_h = the transport time from harvest, to animal consumption, sec;

t_{ep} = period of pasture grass exposure during the growing season, sec;

t_{es} = period of crop exposure during the growing season (stored feed); sec;

I_i = factor to account for fractional deposition of radionuclide i.

For radionuclides other than iodine, the factor I_i is equal to one. For radioiodines, the value of I_i may vary. However, a value of 1.0 was used in calculating R values in Tables 11 through 13.

All other terms remain the same as defined in Equation 2.5-5. Appendix C, Table 2 contains the values which were used in calculating R_i for the meat pathway.

The concentration of tritium in meat is based on its airborne concentration rather than the deposition. Therefore, the R_i is based on χ/Q.

$$R_{T_B} = K'K'''F_fQ_FU_{ap}(DFL_i)_a\ 0.75(0.5/H) \qquad 2.5\text{-}8$$

where

R_{T_B} = dose factor for the meat ingestion pathway for tritium for any organ of interest, mrem/yr per mCi/m^3,

All other terms are defined in Equation 2.5-6 and 2.5-7, above.

E. Vegetation Pathway

The integrated concentration in vegetation consumed by man follows the expression developed in the derivation of the milk factor. Man is considered to consume two types of vegetation (fresh and stored) that differ only in the time period between harvest and consumption, therefore:

$$R_{i_v} = I_iK'(DFL_i)_a \left[U_a^L f_L e^{-\lambda_i t_L} \left[\frac{r(1-e^{-\lambda_{E_i} t_e})}{Y_V\lambda_{E_i}} + \frac{B_{iv}(1-e^{-\lambda_i t_b})}{p\lambda_i} \right] + U_a^S f_g e^{-\lambda_i t_h} \left[\frac{r(1-e^{-\lambda_{E_i} t_e}}{Y_V\lambda_{E_i}} + \frac{B_{iv}(1-e^{\lambda_i t_b})}{p\lambda_i} \right] \right] \qquad 2.5\text{-}9$$

where

R_{i_v} = dose factor for vegetable pathway for radionuclide i for the organ of interest, mrem/yr per μCi/sec per m^{-2};

K' = a constant of unit conversion,

= 10^6 pCi/μCi;

U_a^L = the consumption rate of fresh leafy vegetationby the receptor in age group a, kg/yr;

U_a^S = the consumption rate of stored vegetation by the receptor in age group a, kg/yr;

f_L = the fraction of the annual intake of fresh leafy vegetation grown locally;

f_g = the traction of the annual intake of stored vegetation grown locally;

t_L = the average time between harvest of leafy vegetation and its consumption, sec;

t_h = the average time between harvest of stored vegetation and its consumption, sec;

Y_v = the vegetation areal density, kg/m^2;

t_e = period of leafy vegetable exposure during growing season, sec;

I_i = factor to account for fractional deposition of radionuclide i.

For radionuclides other than iodine, the factor I_i is equal to one. For radioiodines, the value of I_i may vary. However, a value of 1.0 was used in calculating the R values in Tables 8 through 10. All other factors were defined above.

Appendix C, Table 3 presents the appropriate parameter values and their source in Regulatory Guide 1.109 Revision 1.

In lieu of site-specific data, default values for f_L and f_g, 1.0 and 0.76, respectively, were used in the calculation of R_i. These values were obtained from Table E-15 of Regulatory Guide 1.109 Revision 1.

The concentration of tritium in vegetation is based on the airborne concentration rather than the deposition. Therefore, the R_i is based on χ/Q:

$$R_{T_v} = K'K'''[U_a^L f_L = U_a^S f_g] (DFL_i)_a \; 0.75(0.5/H) \quad 2.5\text{-}10$$

where

R_{T_v} = dose factor for the vegetable pathway for tritium for any organ of interest, mrem/yr per mCi/m^3,

All other terms remain the same as those in Equations 2.5-6 and 2.5-9.

2.6 References

1. Monticello Nuclear Generating Plant Technical Specifications, TS-B.2.4-Radioactive Effluents, Specification 2.4.3F Rev. 25.

2. USNRC, Title 10, Code of Federal Regulation, Part 50, "Domestic Licensing of Production and Utilization Facilities", Appendix I, "Numerical Guides for Design Objectives and Limiting Conditions for Operation to Meet the Criterion 'As Low as is Reasonably Achievable' for Radioactive Material in Light-Water-Cooled Nuclear Power Reactor Effluents".

3. NSP - Monticello Nuclear Generating Plant, Appendix I Analysis - Supplement No. 1 - Docket No. 50-263, Table 2.1-3.

4. Boegli, J.S., et. al. Eds, "Preparation of Radiological Effluent Technical Specifications for Nuclear Power Plants, NUREG-0133, 1978, NTIS, Springfield Va.

5. Sangendorf, J.F. and J. T. Goll, "XOQDOQ - Program for the Meteorological Evaluation of Routine Effluent Releases at Nuclear Power Stations", NUREG-0324, 1977, USNRC, Washington, D.C.

6. USNRC, Regulatory Guide 1.109, "Calculation of Annual Doses to Man from Routine Releases of Reactor Effluents for the Purpose of Evaluating Compliance with 10 CFR 50, Appendix I", Rev. 1, Oct. 1977, USNRC, Washington.

7. USNRC, Regulatory Guide 1.111, "Methods for Estimating Atmospheric Transport and Dispersion of Gaseous Effluents in Routine Releases from Light-Water-Cooled Reactors", July 1977. USNRC, Washington, D.C.

8. EPA, Title 40, Code of Federal Regulations, Part 190 "Environmental Radiation Protection Standards for Nuclear Power Operations".

Figure 1 Gaseous Radwaste

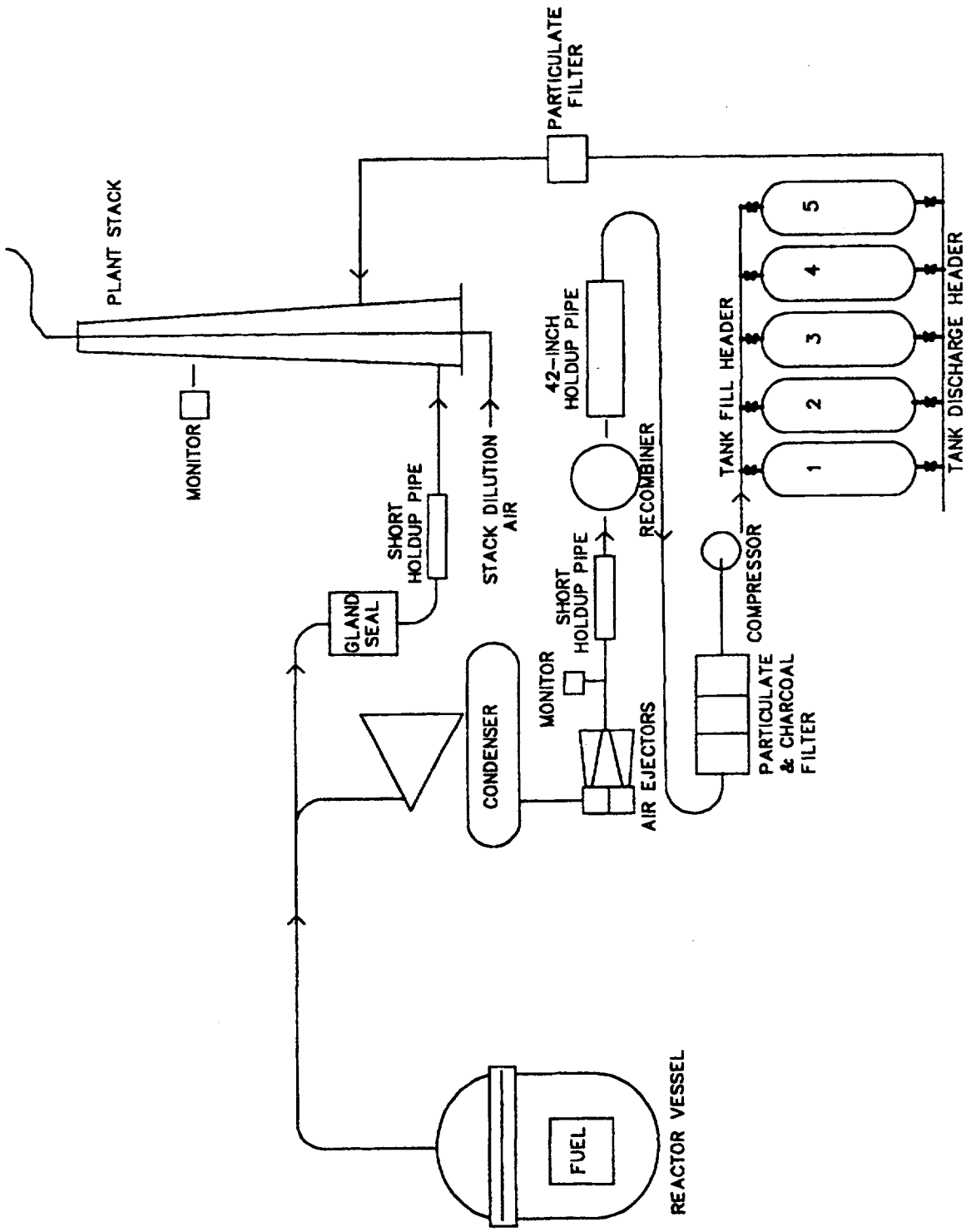

Figure 2 Ventilation System

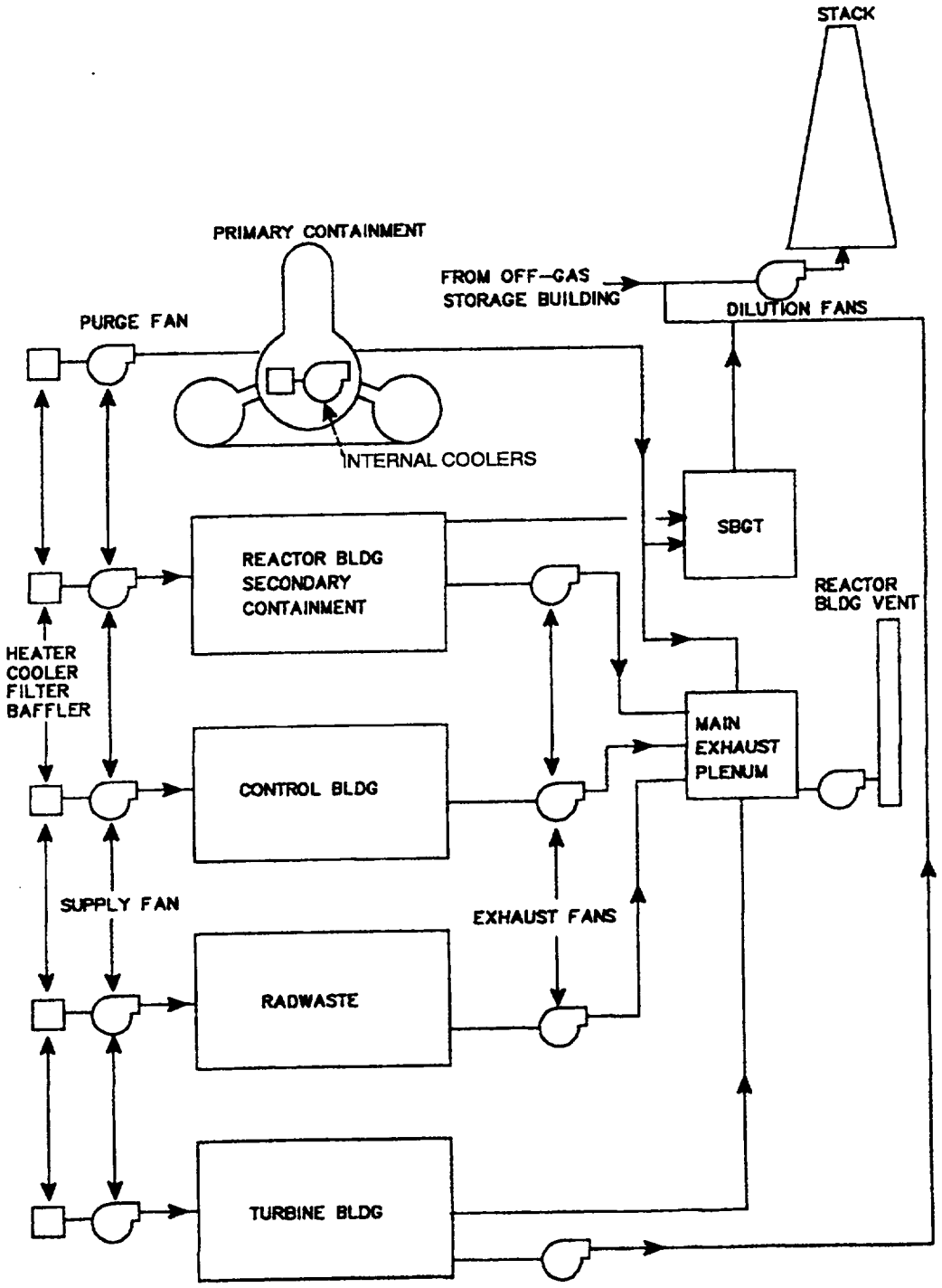

Table 1 Gaseous Source Terms(3) A_i, Ci/yr

Radionuclide	Reactor Building Vent	Gland Seal	Mechanical Vacuum Pump	Gaseous Radwaste	Drywell Purging
Kr-83m	- -	2.3E 01	- -	- -	- -
Kr-85m	7.1E 01	4.1E 01	- -	- -	3.0E 00
Kr-85	- -	- -	- -	1.3E 02	- -
Kr-87	1.33E 02	1.4E 02	- -	- -	3.0E 00
Kr-88	2.33E 02	1.4E 02	- -	- -	3.0E 00
Kr-89	- -	6.0E 02	- -	- -	- -
Kr-90	- -	- -	- -	- -	- -
Xe-131m	- -	- -	- -	4.5E 01	- -
Xe-133m	- -	2.0E 00	- -	2.7E 01	- -
Xe-133	3.26E 02	5.6E 01	2.3E 03	8.9E 03	6.6E 01
Xe-135m	6.96E 02	1.7E 01	- -	- -	4.6E 01
Xe-135	7.09E 02	1.5E 02	3.5E 02	- -	3.4E 01
Xe-137	- -	7.3E 02	- -	- -	- -
Xe-138	1.41E 03	5.6E 02	- -	- -	7.0E 00
Xe-139	- -	- -	- -	- -	- -
Ar-41	- -	- -	- -	- -	- -
Total	3.58E 03	2.46E 03	2.65E 03	9.10E 03	1.62E 02

Table 2 Dose Factors and Constants for the Total Body and Skin for Gaseous Radionuclides

Radionuclide	Total Whole Body Dose Factor K_i (mrem/yr per μCi/m3)	Total Skin Dose Factor $L +_i 1.1M_i$ (mrem/yr per μCi/m3)	Total Body Dose Constant for Long Term Releases V_i (mrem/yr per μCi/sec)
Kr-83m	7.56E-02	2.12E 01	2.61E-09
Kr-85m	1.17E 03	2.81E 03	1.39E-04
Kr-85	1.61E 01	1.36E 03	2.10E-06
Kr-87	5.92E 03	1.65E 04	6.33E-04
Kr-88	1.47E 04	1.91E 04	1.66E-03
Kr-89	1.66E 04	2.91E 04	1.12E-03
Kr-90	1.56E 04	2.52E 04	1.61E-04
Xe-131m	9.15E 01	6.48E 02	3.31E-05
Xe-133m	2.51E 02	1.35E 03	2.51E-05
Xe-133	2.94E 02	6.94E 02	2.61E-05
Xe-135m	3.12E 03	4.41E 03	3.34E-04
Xe-135	1.81E 03	3.97E 03	2.24E-04
Xe-137	1.42E 03	1.39E 04	9.99E-05
Xe-138	8.83E 03	1.43E 04	9.90E-04
Xe-139	5.02E 03	7.10E 04	5.79E-05
Ar-41	8.84E 03	1.29E 04	1.20E-03

Table 2 Dose Factors and Constants for the Total Body and Skin for Gaseous Radionuclides (cont'd)

Radionuclide	Total Body Dose Constant for Short Term Releases v_i (mrem/yr per μCi/sec)	Total Skin Dose Constant for Long Term Releases $L_i(\chi/Q)_s.1.1B_i$* (mrem)/yr per μCi/sec)	Total Dose Constant for Short Term Releases $L_i(\chi/q)_s.1.1b_i$* (mrem)/yr per μCi/sec)
Kr-83m	2.99E-09	4.15E-07	4.75E-07
Kr-85m	1.59E-04	3.90E-04	7.07E-04
Kr-85	2.40E-06	1.52E-04	4.14E-04
Kr-87	7.25E-04	2.13E-03	4.18E-03
Kr-88	1.90E-03	3.00E-03	4.86E-03
Kr-89	1.28E-03	2.97E-03	5.20E-03
Kr-90	1.85E-04	1.08E-03	2.54E-03
Xe-131m	3.79E-05	1.10E-04	2.11E-04
Xe-133m	2.87E-05	1.55E-04	3.56E-04
Xe-133	2.99E-05	7.88E-05	1.45E-04
Xe-135m	3.82E-04	6.36E-04	8.54E-04
Xe-135	2.57E-04	5.77E-04	9.94E-04
Xe-137	1.14E-04	1.52E-03	3.92E-03
Xe-138	1.13E-03	2.10E-03	3.13E-03
Xe-139	6.63E-05	7.33E-03	2.01E-02
Ar-41	1.57E-03	2.28E-03	3.10E-03

* $(\chi/Q)_s$, $(\chi/q)_s$, B_i, and b_i values obtained from other tables in the ODCM.

Table 3 Air Ejector Monitor Trip Setting and Storage Tank Contents Storage Tank Activity in Dose Equivalent Curies Xe-133 12 Hours After Completion of Tank Fill Release Rate Set to 1.00 of Maximum Trip Setting

Recoil/Diff/Eq	Qtot(5 Min)	Qtot(30 Min)	Condenser Air Inleakage, CFM 3	6	9	12	15	18	21	24	27	30
1.0 0.0 0.0	2.149E 06	2.600E 05	956.	1492.	1806.	1970	2045.	2068.	2062.	2039.	2005.	1965.
0.9 0.1 0.0	1.876E 06	2.600E 05	2008.	2459.	2743.	2880.	2923.	2912.	2872.	2815.	2750.	2680.
0.9 0.0 0.1	2.042E 06	2.600E 05	2480.	2585.	2702.	2747.	2738.	2697.	2639.	2572.	2502.	2431.
0.8 0.2 0.0	1.664E 06	2.600E 05	2823.	3206.	3469.	3584.	3602.	3565.	3499.	3416.	3326.	3234.
0.8 0.1 0.1	1.772E 06	2.600E 05	3371.	3444.	3556.	3589.	3558.	3490.	3403.	3308.	3209.	3111.
0.8 0.2 0.2	1.925E 06	2.600E 05	4145.	3779.	3680.	3595.	3495.	3384.	3269.	3155.	3045.	2939.
0.7 0.3 0.0	1.495E 06	2.600E 05	3471.	3802.	4046.	4144.	4143.	4086.	3998.	3895.	3785.	3674.
0.7 0.2 0.1	1.565E 06	2.600E 05	4053.	4102.	4211.	4233.	4186.	4098.	3989.	3871.	3751.	3633.
0.7 0.1 0.2	1.661E 06	2.600E 05	4842.	4507.	4434.	4554.	4243.	4114.	3977.	3840.	3705.	3576.
0.7 0.0 0.3	1.797E 06	2.600E 05	5971.	5088.	4752.	4526.	4325.	4137.	3960.	3794	3640.	3496.
0.6 0.4 0.0	1.385E 06	2.600E 05	4000.	4288.	4517.	4602.	4585.	4510.	4405.	4285.	4160.	4034.
0.6 0.3 0.1	1.402E 06	2.600E 05	4593.	4621.	4728.	4743.	4682.	4578.	4452.	4317.	4180.	4045.
0.6 0.2 0.2	1.460E 06	2.600E 05	5370.	5059.	5005.	4928.	4810.	4667.	4514.	4358.	4206.	4060.
0.6 0.1 0.3	1.540E 06	2.600E 05	6435.	5659.	5383.	5182.	4985.	4789.	4598.	4415.	4242.	4080.
0.6 0.0 0.4	1.655E 06	2.600E 05	7982.	6530.	5934.	5551.	5240.	4967.	4721.	4498.	4295.	4109.
0.5 0.5 0.0	1.243E 06	2.600E 05	4440.	4691.	4909.	4982.	4951.	4862.	4743.	4609.	4471.	4332.
0.5 0.4 0.1	1.270E 06	2.600E 05	5030.	5043.	5148.	5156.	5084.	4967.	4827.	4678.	4527.	4379.
0.5 0.3 0.2	1.303E 06	2.600E 05	5784.	5492.	5453.	5379.	5254.	5101.	4934.	4765.	4599.	4439.
0.5 0.2 0.3	1.347E 06	2.600E 05	6782.	6086.	5856.	5673.	5479.	5278.	5076.	4881.	4694.	4518.
0.5 0.1 0.4	1.408E 06	2.600E 05	8165.	6909.	6415.	6082.	5791.	5523.	5273.	5041.	4826.	4627.
0.5 0.0 0.5	1.498E 06	2.600E 05	10208.	8126.	7241.	6685.	6552.	5885.	5663.	5277.	5021.	4788.
0.4 0.6 0.0	1.147E 06	2.600E 05	4811.	5032.	5240.	5302.	5261.	5160.	5028.	4883.	4733.	4584.
0.4 0.5 0.1	1.160E 06	2.600E 05	5391.	5391.	5494.	5497.	5417.	5289.	5137.	4976.	4814.	4655.
0.4 0.4 0.2	1.176E 06	2.600E 05	6118.	5840.	5813.	5741.	5612.	5450.	5273.	5092.	4915.	4744.
0.4 0.3 0.3	1.197E 06	2.600E 05	7052.	6418.	6223.	6055.	5864.	5657.	5448.	5242.	5045.	4858.
0.4 0.2 0.4	1.225E 06	2.600E 05	8300.	7190.	6771.	6475.	6199.	5934.	5681.	5442.	5218.	5010.
0.4 0.1 0.5	1.265E 06	2.600E 05	10051.	8273.	7540.	7063.	6670.	6322.	6008.	5723.	5462.	5223.
0.4 0.0 0.6	1.324E 06	2.600E 05	12686.	9902.	8697.	7948.	7378.	6907.	6501.	6145.	5828.	5544.

Table 3 Air Ejector Monitor Trip Setting and Storage Tank Contents Storage Tank Activity in Dose Equivalent Curies Xe-133 12 Hours After Completion of Tank Fill Release Rate Set to 1.00 of Maximum Trip Setting (cont'd)

Recoil/Diff/Eq	Qtot(5 Min)	Qtot(30 Min)	Condenser Air Inleakage, CFM 3	6	9	12	15	18	21	24	27	30
0.3 0.7 0.0	1.064E 06	2.600E 05	5148.	5324.	5522.	5577.	5526.	5415.	5273.	5117.	4948.	4800.
0.3 0.6 0.1	1.068E 06	2.600E 05	5695.	5684.	5786.	5784.	5697.	5559.	5398.	5227.	5055.	4887.
0.3 0.5 0.2	1.072E 06	2.600E 05	6392.	6127.	6110.	6040.	5907.	5737.	5551.	5362.	5175.	4995.
0.3 0.4 0.3	1.078E 06	2.600E 05	7268.	6684.	6517.	6361.	6171.	5961.	5744.	5531.	5325.	5129.
0.3 0.3 0.4	1.085E 06	2.600E 05	8404.	7406.	7046.	6777.	6513.	6251.	5995.	5751.	5521.	5304.
0.3 0.2 0.5	1.092E 06	2.600E 05	9937.	8380.	7758.	7338.	6975.	6642.	6333.	6047.	5784.	5540.
0.3 0.1 0.6	1.108E 06	2.600E 05	12115.	9765.	8771.	8136.	7632.	7197.	6813.	6469.	6158.	5876.
0.3 0.0 0.7	1.129E 06	2.600E 05	15459.	11891.	10326.	9361.	8639.	8051.	7550.	7115.	6732.	6391.
0.2 0.8 0.0	9.929E 05	2.600E 05	5403.	5576.	5767.	5814.	5755.	5635.	5484.	5320.	5153.	4987.
0.2 0.7 0.1	9.894E 05	2.600E 05	5954.	5934.	6034.	6029.	5935.	5790.	5620.	5441.	5261.	5085.
0.2 0.6 0.2	9.052E 05	2.600E 05	6621.	6366.	6358.	6289.	6153.	5977.	5784.	5587.	5393.	5204.
0.2 0.5 0.3	9.799E 05	2.600E 05	7444.	6901.	6757.	6610.	6422.	6209.	5987.	5768.	5555.	5352.
0.2 0.4 0.4	9.733E 05	2.600E 05	8487.	7577.	7263.	7017.	6762.	6502.	6244.	5996.	5760.	5538.
0.2 0.3 0.5	9.646E 05	2.600E 05	9849.	8462.	7924.	7548.	7207.	6885.	6508.	6295.	6029.	5782.
0.2 0.2 0.6	9.528E 05	2.600E 05	11706.	9667.	8825.	8272.	7814.	7406.	7038.	6702.	6395.	6114.
0.2 0.1 0.7	9.357E 05	2.600E 05	14384.	11405.	10124.	9316	8689	8159.	7698.	7289.	6923.	6593.
0.2 0.0 0.8	9.090E 05	2.600E 05	18586.	14132.	12163.	10954	10061	9340.	8734.	8210.	7751.	7345.
0.1 0.9 0.0	9.305E 05	2.600E 05	5643.	5796.	5981.	6022.	5955.	5827.	5669.	5497.	5322.	5150.
0.1 0.8 0.1	9.217E 05	2.600E 05	6178.	6149.	6249.	6240.	6141.	5989.	5812.	5625.	5439.	5256.
0.1 0.7 0.2	9.112E 05	2.600E 05	6816.	6570.	6568.	6501.	6362.	6181.	5982.	5778.	5577.	5383.
0.1 0.6 0.3	8.985E 05	2.600E 05	7591.	7082.	6957.	6818.	6631.	6415.	6190.	5964.	5964.	5537.
0.1 0.5 0.4	8.826E 05	2.600E 05	8554.	7717.	7440.	7212.	6995.	6706.	6447.	6195.	5955.	5728.
0.1 0.4 0.5	8.624E 05	2.600E 05	9781.	8526.	8055.	7713.	7309.	7076.	6775.	6490.	6222.	5972.
0.1 0.3 0.6	8.358E 05	2.600E 05	11397.	9593.	8865.	8374.	7951.	7564.	7207.	6877.	6573.	6293.
0.1 0.2 0.7	7.992E 05	2.600E 05	13625.	11062.	9982.	9284.	8723.	8236.	7802.	7411.	7058.	6736.
0.1 0.1 0.8	7.454E 05	2.600E 05	16890.	13216.	11619.	10619.	9856.	9222.	8675.	8194.	7768.	7385.
0.1 0.0 0.9	6.591E 05	2.600E 05	22138.	16679.	14250.	12764.	11676.	10805.	10077.	9453.	8909.	8428.
0.0 1.0 0.0	8.755E 05	2.600E 05	5855.	5990.	6169.	6205.	6132.	5997.	5832.	5653.	5472.	5293.
0.0 0.9 0.1	8.628E 05	2.600E 05	6372.	6336.	6435.	6424.	6320.	6162.	5979.	5786.	5593.	5405.
0.0 0.8 0.2	8.477E 05	2.600E 05	6983.	6745.	6750.	6683.	6542.	6357.	6152.	5943.	5732.	5536.
0.0 0.7 0.3	8.296E 05	2.600E 05	7716.	7235.	7126.	6994.	6808.	6590.	6361.	6131.	5908.	5694.
0.0 0.6 0.4	8.075E 05	2.600E 05	8610.	7832.	7586.	7373.	7133.	6875.	6615.	6360.	6117.	5886.

Table 3 Air Ejector Monitor Trip Setting and Storage Tank Contents Storage Tank Activity in Dose Equivalent Curies Xe-133 12 Hours After Completion of Tank Fill Release Rate Set to 1.00 of Maximum Trip Setting (cont'd)

Recoil/Diff/Eq	Qtot(5 Min)	Qtot(30 Min)	Condenser Air Inleakage, CFM 3	6	9	12	15	18	21	24	27	30
0.0 0.5 0.5	7.799E 05	2.600E 05	9725	8578.	8160.	7846.	7538.	7231.	6932.	6647.	6378.	6126.
0.0 0.4 0.6	7.446E 05	2.600E 05	11156.	9533.	8897.	8454.	8058.	7687.	7339.	7014.	6713.	6433.
0.0 0.3 0.7	6.976E 05	2.600E 05	13059.	10807.	9876.	9261.	8749.	8293.	7880.	7508.	7158.	6843.
0.0 0.2 0.8	6.320E 05	2.600E 05	15713.	12581.	11241.	10386.	9713.	9139.	8634.	8184.	7779.	7413.
0.0 0.1 0.9	5.342E 05	2.600E 05	19670.	15227.	13277.	12065.	11151.	10401.	9759.	9200.	8705.	8264.
0.0 0.0 1.0	3.727E 05	2.600E 05	26207.	19597.	16640.	14838.	13527.	12484.	11617.	10878.	10235.	9670.

Table 4 Child Critical Organ Dose Parameters for Radionuclide i for the Inhalation Pathway

Nuclide	P_{i_I} mrem/yr µCi/m³
H-3	1.12E 03
Cr-51	1.70E 04
Mn-54	1.58E 06
Fe-59	1.27E 06
Co-58	1.11E 06
Co-60	7.07E 06
Zn-65	9.95E 05
Rb-86	1.98E 05
Sr-89	2.16E 06
Sr-90	1.01E 08
Y-91	2.63E 06
Zr-95	2.23E 06
Nb-95	6.14E 05
Ru-103	6.62E 05
Ru-106	1.43E 07
Ag-110m	5.48E 06
Te-127m	1.48E 06
Te-129m	1.76E 06
Cs-134	1.01E 06
Cs-136	1.71E 05
Cs-137	9.07E 05
Ba-140	1.74E 06
Ce-141	5.44E 05
Ce-144	1.20E 07
I-131	1.62E 07
I-133	3.85E 06
I-135	7.92E 05

Table 5 Dose Factors for Noble Gases and Daughters That May Be Detected in Gaseous Effluents

Radionuclide	Total Body Dose Factor K_i mrem/yr µCi/m³	Skin Dose Factor L_i mrem/yr µCi/m³	Gamma Air Dose Factor M_i mrad/yr µCi/m³	Beta Air Dose Factor N_i mrad/yr µCi/m³
Kr-83m	7.56E-02	--	1.93E+01	2.88E+02
Kr-85m	1.17E+03	1.46E+03	1.23E+03	1.97E+03
Kr-85	1.61E+01	1.34E+03	1.72E+01	1.95E+03
Kr-87	5.92E+03	9.73E+03	6.17E+03	1.03E+04
Kr-88	1.47E+04	2.37E+03	1.52E+04	2.93E+03
Kr-89	1.66E+04	1.01E+04	1.73E+04	1.06E+04
Kr-90	1.56E+04	7.29E+03	1.63E+04	7.83E+03
Xe-131m	9.15E+01	4.76E+02	1.56E+02	1.11E+03
Xe-133m	2.51E+02	9.94E+02	3.27E+02	1.48E+03
Xe-133	2.94E+02	3.06E+02	3.53E+02	1.05E+03
Xe-135m	3.12E+03	7.11E+02	3.36E+03	7.39E+02
Xe-135	1.81E+03	1.86E+03	1.92E+03	2.46E+03
Xe-137	1.42E+03	1.22E+04	1.51E+03	1.27E+04
Xe-138	8.83E+03	4.13E+03	9.21E+03	4.75E+03
Xe-139	5.02E+03	6.52E+04	5.28E+03	6.52E+04
Ar-41	8.84E+03	2.69E+03	9.30E+03	3.28E+03

Table 6 Dose Parameters for Finite Evaluated Plumes for the Critical Boundary Location 0.51 mi from the Stack in the SSE Sector

	Long Term Release*		Short Term Release**	
Noble Gas Radionuclide	Total Body V_i mrem/yr / Ci/sec	Gamma Air B_i mrad/yr / Ci/sec	Total Body v_i mrem/yr / Ci/sec	Gamma Air b_i mrad/yr / Ci/sec
Kr-83m	2.61E-09	3.77E-07	2.99E-09	4.32E-07
Kr-85m	1.39E-04	2.07E-04	1.59E-04	2.37E-04
Kr-85	2.10E-06	3.18E-06	2.40E-06	3.64E-06
Kr-87	6.33E-04	9.52E-04	7.25E-02	1.09E-03
Kr-88	1.66E-03	2.49E-03	1.90E-03	2.85E-03
Kr-89	1.12E-03	1.68E-03	1.28E-03	1.92E-03
Kr-90	1.61E-04	2.42E-04	1.85E-04	2.78E-04
Xe-131m	3.31E-05	5.21E-05	3.79E-05	5.97E-05
Xe-133m	2.51E-05	4.09E-05	2.87E-05	4.68E-05
Xe-133	2.61E-05	4.08E-05	2.99E-05	4.67E-05
Xe-135m	3.34E-04	5.06E-04	3.82E-04	5.79E-04
Xe-135	2.24E-04	3.37E-04	2.57E-04	3.89E-04
Xe-137	9.99E-05	1.51E-04	1.14E-04	1.73E-04
Xe-138	9.90E-04	1.49E-03	1.13E-03	1.70E-03
Xe-139	5.79E-05	8.69E-05	6.63E-05	9.95E-05
Ar-41	1.20E-03	1.80E-03	1.38E-03	2.07E-03

* Values are annual average

** Values are for 144 hours per year purge.

Table 7 R_i Values for the Monticello Nuclear Generating Plant Ground Pathway

Nuclide	T. Body	GI Tract	Bone	Liver	Kidney	Thyroid	Lung	Skin
Cr-51	4.66E 06	4.66E 06	4.66E 06	4.66E 06	4.66E 06	4.66E 06	4.66E 06	5.51E 06
Mn-54	1.34E 09	1.34E 09	1.34E 09	1.34E 09	1.34E 09	1.34E 09	1.34E 09	1.57E 09
Fe-59	2.75E 08	2.75E 08	2.75E 08	2.75E 08	2.75E 08	2.75E 08	2.75E 08	3.23E 08
Co-58	3.79E 08	3.79E 08	3.79E 08	3.79E 08	3.79E 08	3.79E 08	3.79E 08	4.44E 08
Co-60	2.15E 10	2.15E 10	2.15E 10	2.15E 10	2.15E 10	2.15E 10	2.15E 10	2.52E 10
Zn-65	7.49E 08	7.49E 08	7.49E 08	7.49E 08	7.49E 08	7.49E 08	7.49E 08	8.69E 10
Sr-89	2.23E 04	2.23E 04	2.23E 04	2.23E 04	2.23E 04	2.23E 04	2.23E 04	2.58E 04
Zr-95	2.49E 08	2.49E 08	2.49E 08	2.49E 08	2.49E 08	2.49E 08	2.49E 08	2.89E 08
I-131	1.72E 07	1.72E 07	1.72E 07	1.72E 07	1.72E 07	1.72E 07	1.72E 07	2.09E 07
I-133	2.47E 06	2.47E 06	2.47E 06	2.47E 06	2.47E 06	2.47E 06	2.47E 06	3.00E 06
I-135	2.52E 06	2.52E 06	2.52E 06	2.52E 06	2.52E 06	2.52E 06	2.52E 06	2.94E 06
Cs-134	6.82E 09	6.82E 09	6.82E 09	6.82E 09	6.82E 09	6.82E 09	6.82E 09	7.96E 09
Cs-136	1.49E 08	1.49E 08	1.49E 08	1.49E 08	1.49E 08	1.49E 08	1.49E 08	1.69E 08
Cs-137	1.03E 10	1.03E 10	1.03E 10	1.03E 10	1.03E 10	1.03E 10	1.03E 10	1.20E 10
Ba-140	2.05E 07	2.05E 07	2.05E 07	2.05E 07	2.05E 07	2.05E 07	2.05E 07	2.34E 07
Ce-141	1.36E 07	1.36E 07	1.36E 07	1.36E 07	1.36E 07	1.36E 07	1.36E 07	1.53E 07
Ce-144	6.96E 07	6.96E 07	6.96E 07	6.96E 07	6.96E 07	6.96E 07	6.96E 07	8.04E 07
Nb-95	1.36E 08	1.36E 08	1.36E 08	1.36E 08	1.36E 08	1.36E 08	1.36E 08	1.60E 08
Ru-103	1.08E 08	1.08E 08	1.08E 08	1.08E 08	1.08E 08	1.08E 08	1.08E 08	1.26E 08

* R_i values are in units of mRem/yr per $\mu Ci/m^3$ for inhalation and tritium, and in units of m^2 mRem/yr per $\mu Ci/Sec$ for all others.

Table 8 R_i Values for the Monticello Nuclear Generating Plant Vegetable Pathway Adult Age Group

Nuclide	T. Body	GI Tract	Bone	Liver	Kidney	Thyroid	Lung	Skin
H-3	2.28E 03	2.28E 03	0.00E 00	2.28E 03	2.28E 03	2.28E 03	2.28E 03	2.28E 03
Cr-51	4.60E 04	1.16E 07	0.00E 00	0.00E 00	1.01E 04	2.75E 04	6.10E 04	0.00E 00
Mn-54	5.83E 07	9.36E 08	0.00E 00	3.05E 08	9.09E 07	0.00E 00	0.00E 00	0.00E 00
Fe-59	1.12E 08	9.75E 08	1.24E 08	2.93E 08	0.00E 00	0.00E 00	8.17E 07	0.00E 00
Co-58	6.71E 07	6.07E 08	0.00E 00	2.99E 07	0.00E 00	0.00E 00	0.00E 00	0.00E 00
Co-60	3.67E 08	3.12E 09	0.00E 00	1.66E 08	0.00E 00	0.00E 00	0.00E 00	0.00E 00
Zn-65	5.77E 08	8.04E 08	4.01E 08	1.28E 09	8.54E 08	0.00E 00	0.00E 00	0.00E 00
Sr-89	2.87E 08	1.60E 09	1.00E 10	0.00E 00	0.00E 00	0.00E 00	0.00E 00	0.00E 00
Sr-90	1.64E 11	1.93E 10	6.70E 11	0.00E 00	0.00E 00	0.00E 00	0.00E 00	0.00E 00
Zr-95	2.51E 05	1.17E 09	1.16E 06	3.71E 05	5.82E 05	0.00E 00	0.00E 00	0.00E 00
I-131	6.61E 07	3.04E 07	8.07E 07	1.15E 08	1.98E 08	3.78E 10	0.00E 00	0.00E 00
I-133	1.12E 06	3.30E 06	2.11E 06	3.67E 06	6.40E 06	5.39E 09	0.00E 00	0.00E 00
I-135	3.73E 04	1.14E 05	3.86E 04	1.01E 05	1.62E 05	6.67E 06	0.00E 00	0.00E 00
Cs-134	8.83E 09	1.89E 08	4.54E 09	1.08E 10	3.49E 09	0.00E 00	1.16E 09	0.00E 00
Cs-136	1.19E 08	1.88E 07	4.19E 07	1.66E 08	9.21E 07	0.00E 00	1.26E 07	0.00E 00
Cs-137	5.94E 08	1.76E 08	6.63E 09	9.07E 09	3.08E 09	0.00E 00	1.02E 09	0.00E 00
Ba-140	8.40E 06	2.64E 08	1.28E 08	1.61E 05	5.47E 04	0.00E 00	9.22E 04	0.00E 00
Ce-141	1.48E 04	4.99E 08	1.93E 05	1.31E 05	6.07E 04	0.00E 00	0.00E 00	0.00E 00
Ce-144	1.69E 06	1.07E 10	3.15E 07	1.32E 07	7.82E 06	0.00E 00	0.00E 00	0.00E 00
Nb-95	4.19E 04	4.73E 08	1.40E 05	7.80E 04	7.71E 04	0.00E 00	0.00E 00	0.00E 00
Ru-103	2.03E 06	5.51E 08	4.72E 06	0.00E 00	1.80E 07	0.00E 00	0.00E 00	0.00E 00

* R_i values are in units of mRem/yr per $\mu Ci/m^3$ for inhalation and tritium, and in units of m^2 mRem/yr per $\mu Ci/Sec$ for all others.

Table 9 R_i Values for the Monticello Nuclear Generating Plant Vegetable Pathway Teen Age Group

Nuclide	T. Body	GI Tract	Bone	Liver	Kidney	Thyroid	Lung	Skin
H-3	2.61E 03	2.61E 03	0.00E 00	2.61E 03	2.61E 03	2.61E 03	2.61E 03	2.61E 03
Cr-51	6.11E 04	1.03E 07	0.00E 00	0.00E 00	1.34E 04	3.39E 04	8.72E 04	0.00E 00
Mn-54	8.79E 07	9.09E 08	0.00E 00	4.43E 08	1.32E 08	0.00E 00	0.00E 00	0.00E 00
Fe-59	1.60E 08	9.78E 08	1.77E 08	4.14E 08	0.00E 00	0.00E 00	1.30E 08	0.00E 00
Co-58	9.79E 07	5.85E 08	0.00E 00	4.25E 07	0.00E 00	0.00E 00	0.00E 00	0.00E 00
Co-60	5.57E 08	3.22E 09	0.00E 00	2.47E 08	0.00E 00	0.00E 00	0.00E 00	0.00E 00
Zn-65	8.68E 08	7.88E 08	5.36E 08	1.86E 09	1.19E 08	0.00E 00	0.00E 00	0.00E 00
Sr-89	4.36E 08	1.81E 09	1.52E 10	0.00E 00	0.00E 00	0.00E 00	0.00E 00	0.00E 00
Sr-90	2.05E 11	2.33E 10	8.32E 11	0.00E 00	0.00E 00	0.00E 00	0.00E 00	0.00E 00
Zr-95	3.68E 05	1.23E 09	1.69E 06	5.35E 05	7.86E 05	0.00E 00	0.00E 00	0.00E 00
I-131	5.77E 07	2.13E 07	7.68E 07	1.07E 08	1.85E 08	3.14E 10	0.00E 00	0.00E 00
I-133	1.01E 06	2.51E 06	1.96E 06	3.32E 06	5.83E 06	4.64E 08	0.00E 00	0.00E 00
I-135	3.33E 04	9.96E 04	3.49E 04	8.98E 04	1.42E 05	5.78E 06	0.00E 00	0.00E 00
Cs-134	7.54E 09	2.02E 08	6.90E 09	1.62E 10	5.16E 10	0.00E 00	1.97E 09	0.00E 00
Cs-136	1.13E 08	1.35E 07	4.28E 07	1.68E 08	9.16E 07	0.00E 00	1.44E 07	0.00E 00
Cs-137	4.90E 09	2.00E 08	1.06E 10	1.41E 10	4.78E 09	0.00E 00	1.86E 09	0.00E 00
Ba-140	8.88E 06	2.12E 08	1.38E 08	1.69E 05	5.72E 04	0.00E 00	1.14E 05	0.00E 00
Ce-141	2.12E 04	5.29E 08	2.77E 05	1.85E 05	8.70E 04	0.00E 00	0.00E 00	0.00E 00
Ce-144	2.72E 06	1.27E 10	5.05E 07	2.09E 07	1.25E 07	0.00E 00	0.00E 00	0.00E 00
Nb-95	5.78E 04	4.49E 08	1.89E 05	1.05E 05	1.02E 05	0.00E 00	0.00E 00	0.00E 00
Ru-103	2.88E 06	5.64E 08	6.75E 06	0.00E 00	2.38E 07	0.00E 00	0.00E 00	0.00E 00

* R_i values are in units of mRem/yr per $\mu Ci/m^3$ for inhalation and tritium, and in units of m^2 mRem/yr per $\mu Ci/Sec$ for all others.

Table 10 R_i Values for the Monticello Nuclear Generating Plant Vegetable Pathway Child Age Group

Nuclide	T. Body	GI Tract	Bone	Liver	Kidney	Thyroid	Lung	Skin
H-3	4.04E 03	4.04E 03	0.00E 00	4.04E 03	4.04E 03	4.04E 03	4.04E 03	4.04E 03
Cr-51	1.16E 05	6.15E 06	0.00E 00	0.00E 00	1.76E 04	6.44E 04	1.18E 05	0.00E 00
Mn-54	1.73E 08	5.44E 08	0.00E 00	6.49E 08	1.82E 08	0.00E 00	0.00E 00	0.00E 00
Fe-59	3.17E 08	6.62E 08	3.93E 08	6.36E 08	0.00E 00	0.00E 00	1.84E 08	0.00E 00
Co-58	1.92E 08	3.66E 08	0.00E 00	6.27E 07	0.00E 00	0.00E 00	0.00E 00	0.00E 00
Co-60	1.11E 09	2.08E 09	0.00E 00	3.76E 08	0.00E 00	0.00E 00	0.00E 00	0.00E 00
Zn-65	1.70E 09	4.81E 08	1.03E 09	2.74E 09	1.73E 09	0.00E 00	0.00E 00	0.00E 00
Sr-89	1.03E 09	1.40E 09	3.62E 10	0.00E 00	0.00E 00	0.00E 00	0.00E 00	0.00E 00
Sr-90	3.49E 11	1.86E 10	1.38E 12	0.00E 00	0.00E 00	0.00E 00	0.00E 00	0.00E 00
Zr-95	7.44E 05	8.71E 08	3.80E 06	8.35E 05	1.20E 05	0.00E 00	0.00E 00	0.00E 00
I-131	8.16E 07	1.28E 07	1.43E 08	1.44E 08	2.36E 08	4.75E 10	0.00E 00	0.00E 00
I-133	1.67E 06	1.78E 06	3.57E 06	4.42E 06	7.36E 06	8.21E 08	0.00E 00	0.00E 00
I-135	5.28E 04	8.50E 04	6.20E 04	1.12E 05	1.71E 05	9.88E 06	0.00E 00	0.00E 00
Cs-134	5.40E 09	1.38E 08	1.56E 10	2.56E 10	7.93E 09	0.00E 00	2.84E 09	0.00E 00
Cs-136	1.43E 08	7.77E 06	8.04E 07	2.21E 08	1.18E 08	0.00E 00	1.76E 07	0.00E 00
Cs-137	3.52E 09	1.50E 08	2.40E 10	2.39E 10	7.78E 09	0.00E 00	2.80E 09	0.00E 00
Ba-140	1.61E 07	1.40E 08	2.76E 08	2.42E 05	7.87E 04	0.00E 00	1.44E 05	0.00E 00
Ce-141	4.75E 04	3.39E 08	6.42E 05	3.20E 05	1.40E 05	0.00E 00	0.00E 00	0.00E 00
Ce-144	6.50E 06	9.95E 09	1.22E 08	3.82E 07	2.11E 07	0.00E 00	0.00E 00	0.00E 00
Nb-95	1.12E 05	2.91E 08	4.04E 05	1.57E 05	1.48E 05	0.00E 00	0.00E 00	0.00E 00
Ru-103	5.83E 06	3.82E 08	1.52E 07	0.00E 00	3.82E 07	0.00E 00	0.00E 00	0.00E 00

* R_i values are in units of mRem/yr per $\mu Ci/m^3$ for inhalation and tritium, and in units of m^2 mRem/yr per $\mu Ci/Sec$ for all others.

Table 11 R_i Values for the Monticello Nuclear Generating Plant Meat Pathway Adult Age Group

Nuclide	T. Body	GI Tract	Bone	Liver	Kidney	Thyroid	Lung	Skin
H-3	3.27E 02	3.27E 02	0.00E 00	3.27E 02	3.27E 02	3.27E 02	3.27E 02	3.27E 02
Cr-51	3.26E 03	8.21E 05	0.00E 00	0.00E 00	7.19E 02	1.95E 03	4.33E 03	0.00E 00
Mn-54	8.98E 05	1.44E 07	0.00E 00	4.71E 06	1.40E 06	0.00E 00	0.00E 00	0.00E 00
Fe-59	1.12E 08	9.73E 08	1.24E 08	2.92E 08	0.00E 00	0.00E 00	8.16E 07	0.00E 00
Co-58	1.95E 07	1.76E 08	0.00E 00	8.68E 06	0.00E 00	0.00E 00	0.00E 00	0.00E 00
Co-60	8.87E 07	7.55E 08	0.00E 00	4.02E 07	0.00E 00	0.00E 00	0.00E 00	0.00E 00
Zn-65	3.06E 08	4.27E 08	2.13E 08	6.78E 08	4.53E 08	0.00E 00	0.00E 00	0.00E 00
Sr-89	4.12E 06	2.30E 07	1.43E 08	0.00E 00	0.00E 00	0.00E 00	0.00E 00	0.00E 00
Sr-90	1.76E 09	2.07E 08	7.17E 09	0.00E 00	0.00E 00	0.00E 00	0.00E 00	0.00E 00
Zr-95	1.94E 05	9.07E 08	8.92E 05	2.86E 05	4.49E 05	0.00E 00	0.00E 00	0.00E 00
I-131	4.33E 06	1.99E 06	5.28E 06	7.55E 06	1.29E 07	2.48E 09	0.00E 00	0.00E 00
I-133	1.13E-01	3.34E-01	2.14E-01	3.72E-01	6.49E-01	5.46E 01	0.00E 00	0.00E 00
I-135	1.78E-17	5.38E-17	1.82E-17	4.77E-17	7.64E-17	3.14E-15	0.00E 00	0.00E 00
Cs-134	6.68E 08	1.43E 07	3.43E 08	8.17E 08	2.64E 08	0.00E 00	8.78E 07	0.00E 00
Cs-136	1.61E 07	2.53E 06	5.65E 06	2.23E 07	1.24E 07	0.00E 00	1.70E 06	0.00E 00
Cs-137	4.33E 08	1.28E 07	4.83E 08	6.61E 08	2.24E 08	0.00E 00	7.46E 07	0.00E 00
Ba-140	9.01E 05	2.83E 07	1.38E 07	1.73E 04	5.87E 03	0.00E 00	9.89E 03	0.00E 00
Ce-141	4.96E 02	1.67E 07	6.47E 03	4.38E 03	2.03E 03	0.00E 00	0.00E 00	0.00E 00
Ce-144	3.94E 04	2.48E 08	7.34E 05	3.07E 05	1.82E 05	0.00E 00	0.00E 00	0.00E 00
Nb-95	3.00E 05	3.39E 09	1.01E 06	5.59E 05	5.52E 05	0.00E 00	0.00E 00	0.00E 00
Ru-103	2.00E 07	5.42E 09	4.64E 07	0.00E 00	1.77E 08	0.00E 00	0.00E 00	0.00E 00

* R_i values are in units of mRem/yr per $\mu Ci/m^3$ for inhalation and tritium, and in units of m^2 mRem/yr per $\mu Ci/Sec$ for all others.

Table 12 R_i Values for the Monticello Nuclear Generating Plant Meat Pathway Teen Age Group

Nuclide	T. Body	GI Tract	Bone	Liver	Kidney	Thyroid	Lung	Skin
H-3	1.95E 02	1.95E 02	0.00E 00	1.95E 02	1.95E 02	1.95E 02	1.95E 02	1.95E 02
Cr-51	2.61E 03	4.39E 05	0.00E 00	0.00E 00	5.72E 02	1.45E 03	3.75E 03	0.00E 00
Mn-54	7.12E 05	7.37E 06	0.00E 00	3.59E 06	1.07E 06	0.00E 00	0.00E 00	0.00E 00
Fe-59	8.95E 07	5.48E 08	9.93E 07	2.32E 08	0.00E 00	0.00E 00	7.31E 07	0.00E 00
Co-58	1.54E 07	9.22E 07	0.00E 00	6.69E 06	0.00E 00	0.00E 00	0.00E 00	0.00E 00
Co-60	7.03E 07	4.06E 08	0.00E 00	3.12E 07	0.00E 00	0.00E 00	0.00E 00	0.00E 00
Zn-65	2.43E 08	2.20E 08	1.50E 08	5.20E 08	3.33E 08	0.00E 00	0.00E 00	0.00E 00
Sr-89	3.47E 06	1.44E 07	1.21E 08	0.00E 00	0.00E 00	0.00E 00	0.00E 00	0.00E 00
Sr-90	1.15E 09	1.30E 08	4.64E 09	0.00E 00	0.00E 00	0.00E 00	0.00E 00	0.00E 00
Zr-95	1.55E 05	5.02E 08	7.15E 05	2.25E 05	3.31E 05	0.00E 00	0.00E 00	0.00E 00
I-131	3.30E 06	1.22E 06	4.39E 06	6.14E 06	1.06E 07	1.79E 09	0.00E 00	0.00E 00
I-133	9.25E-02	2.30E-01	1.79E-01	3.03E-01	5.32E-01	4.23E 01	0.00E 00	0.00E 00
I-135	1.41E-17	4.22E-17	1.48E-17	3.81E-17	6.02E-17	2.45E-17	0.00E 00	0.00E 00
Cs-134	2.98E 08	7.99E 06	2.73E 08	6.42E 08	2.04E 08	0.00E 00	7.79E 07	0.00E 00
Cs-136	1.16E 07	1.40E 06	4.41E 06	1.73E 07	9.44E 06	0.00E 00	1.49E 06	0.00E 00
Cs-137	1.86E 08	7.59E 06	4.01E 08	5.34E 08	1.82E 08	0.00E 00	7.06E 07	0.00E 00
Ba-140	7.33E 05	1.75E 07	1.14E 07	1.39E 04	4.72E 03	0.00E 00	9.37E 03	0.00E 00
Ce-141	4.17E 02	1.04E 07	5.43E 03	3.63E 03	1.71E 03	0.00E 00	0.00E 00	0.00E 00
Ce-144	3.32E 04	1.56E 08	6.18E 05	2.56E 05	1.53E 05	0.00E 00	0.00E 00	0.00E 00
Nb-95	2.39E 05	1.86E 09	7.84E 05	4.35E 05	4.22E 05	0.00E 00	0.00E 00	0.00E 00
Ru-103	1.62E 07	3.16E 09	3.79E 07	0.00E 00	1.33E 08	0.00E 00	0.00E 00	0.00E 00

* R_i values are in units of mRem/yr per $\mu Ci/m^3$ for inhalation and tritium, and in units of m^2 mRem/yr per μCi/Sec for all others.

Table 13 R_i Values for the Monticello Nuclear Generating Plant Meat Pathway Child Age Group

Nuclide	T. Body	GI Tract	Bone	Liver	Kidney	Thyroid	Lung	Skin
H-3	2.36E 02	2.36E 02	0.00E 00	2.36E 02	2.36E 02	2.36E 02	2.36E 02	2.36E 02
Cr-51	4.07E 03	2.16E 05	0.00E 00	0.00E 00	6.17E 02	2.26E 03	4.12E 03	0.00E 00
Mn-54	1.09E 05	3.45E 06	0.00E 00	4.11E 06	1.15E 06	0.00E 00	0.00E 00	0.00E 00
Fe-59	1.42E 08	2.79E 08	1.76E 08	2.85E 08	0.00E 00	0.00E 00	8.26E 07	0.00E 00
Co-58	2.39E 07	4.56E 07	0.00E 00	7.82E 06	0.00E 00	0.00E 00	0.00E 00	0.00E 00
Co-60	1.09E 08	2.05E 08	0.00E 00	3.70E 07	0.00E 00	0.00E 00	0.00E 00	0.00E 00
Zn-65	3.72E 08	1.05E 08	2.25E 08	5.99E 08	3.77E 08	0.00E 00	0.00E 00	0.00E 00
Sr-89	6.55E 06	8.87E 06	2.29E 08	0.00E 00	0.00E 00	0.00E 00	0.00E 00	0.00E 00
Sr-90	1.52E 09	8.08E 07	6.00E 09	0.00E 00	0.00E 00	0.00E 00	0.00E 00	0.00E 00
Zr-95	2.48E 05	2.91E 08	1.27E 06	2.79E 05	3.99E 05	0.00E 00	0.00E 00	0.00E 00
I-131	4.65E 06	7.29E 05	8.14E 06	8.19E 06	1.34E 07	2.71E 09	0.00E 00	0.00E 00
I-133	1.55E 01	1.66E 01	3.32E 01	4.11E 01	6.85E 01	7.63E 01	0.00E 00	0.00E 00
I-135	2.28E 17	3.67E 17	2.68E 17	4.82E 17	7.39E 17	4.27E 15	0.00E 00	0.00E 00
Cs-134	1.67E 08	4.26E 06	4.81E 08	7.90E 08	2.45E 08	0.00E 00	8.78E 07	0.00E 00
Cs-136	1.35E 07	7.34E 05	7.60E 06	2.09E 07	1.11E 07	0.00E 00	1.66E 06	0.00E 00
Cs-137	1.04E 08	4.43E 06	7.39E 08	7.07E 08	2.30E 08	0.00E 00	8.29E 07	0.00E 00
Ba-140	1.22E 06	1.06E 07	2.10E 07	1.84E 04	5.98E 03	0.00E 00	1.10E 04	0.00E 00
Ce-141	7.57E 02	6.36E 06	1.02E 04	5.10E 03	2.24E 03	0.00E 00	0.00E 00	0.00E 00
Ce-144	6.22E 04	9.53E 09	1.17E 06	3.66E 05	2.02E 05	0.00E 00	0.00E 00	0.00E 00
Nb-95	3.77E 05	9.74E 08	1.35E 06	5.27E 05	4.95E 05	0.00E 00	0.00E 00	0.00E 00
Ru-103	2.63E 07	1.77E 09	6.83E 07	0.00E 00	1.72E 08	0.00E 00	0.00E 00	0.00E 00

* R_i values are in units of mRem/yr per $\mu Ci/m^3$ for inhalation and tritium, and in units of m^2 mRem/yr per $\mu Ci/Sec$ for all others.

Table 14 R_i Values for the Monticello Nuclear Generating Plant Cow Milk Pathway Adult Age Group

Nuclide	T. Body	GI Tract	Bone	Liver	Kidney	Thyroid	Lung	Skin
H-3								
Cr-51	1.32E 04	3.32E 06	0.00E 00	0.00E 00	2.91E 03	7.90E 03	1.75E 04	0.00E 00
Mn-54	8.25E 05	1.32E 07	0.00E 00	4.32E 06	1.29E 06	0.00E 00	0.00E 00	0.00E 00
Fe-59	1.25E 07	1.09E 08	1.39E 07	3.26E 07	0.00E 00	0.00E 00	9.10E 06	0.00E 00
Co-58	5.03E 06	4.55E 07	0.00E 00	2.24E 06	0.00E 00	0.00E 00	0.00E 00	0.00E 00
Co-60	1.93E 07	1.65E 08	0.00E 00	8.77E 06	0.00E 00	0.00E 00	0.00E 00	0.00E 00
Zn-65	1.18E 09	1.65E 09	8.21E 08	2.61E 09	1.75E 09	0.00E 00	0.00E 00	0.00E 00
Sr-89	1.97E 07	1.10E 08	6.85E 08	0.00E 00	0.00E 00	0.00E 00	0.00E 00	0.00E 00
Sr-90	6.62E 09	7.80E 08	2.70E 10	0.00E 00	0.00E 00	0.00E 00	0.00E 00	0.00E 00
Zr-95	9.72E 01	4.55E 05	4.48E 02	1.44E 02	2.25E 02	0.00E 00	0.00E 00	0.00E 00
I-131	1.19E 08	5.49E 07	1.45E 08	2.08E 08	3.57E 08	6.82E 10	0.00E 00	0.00E 00
I-133	1.05E 06	3.09E 06	1.98E 06	3.44E 06	6.01E 06	5.06E 08	0.00E 00	0.00E 00
I-135	5.70E 03	1.74E 04	5.90E 03	1.54E 04	2.48E 04	1.02E 06	0.00E 00	0.00E 00
Cs-134	5.74E 09	1.23E 08	2.95E 09	7.02E 09	2.27E 09	0.00E 00	7.54E 08	0.00E 00
Cs-136	3.35E 08	5.60E 07	1.25E 08	4.93E 08	2.74E 08	0.00E 00	3.76E 07	0.00E 00
Cs-137	3.66E 09	1.08E 08	4.09E 09	5.59E 09	1.90E 09	0.00E 00	6.31E 08	0.00E 00
Ba-140	8.43E 05	2.65E 07	1.29E 07	1.62E 04	5.49E 03	0.00E 00	9.25E 03	0.00E 00
Ce-141	1.71E 02	5.78E 06	2.24E 03	1.51E 03	7.02E 02	0.00E 00	0.00E 00	0.00E 00
Ce-144	4.67E 03	6.09E 07	1.80E 05	7.53E 04	4.46E 04	0.00E 00	0.00E 00	0.00E 00
Nb-95	1.08E 04	1.22E 08	3.60E 04	2.01E 04	1.98E 04	0.00E 00	0.00E 00	0.00E 00
Ru-103	1.93E 02	5.24E 04	4.49E 02	0.00E 00	1.71E 03	0.00E 00	0.00E 00	0.00E 00

* R_i values are in units of mRem/yr per $\mu Ci/m^3$ for inhalation and tritium, and in units of m^2 mRem/yr per μCi/Sec for all others.

Table 15 R_i Values for the Monticello Nuclear Generating Plant Cow Milk Pathway Teen Age Group

Nuclide	T. Body	GI Tract	Bone	Liver	Kidney	Thyroid	Lung	Skin
H-3	1.00E 03	1.00E 03	0.00E 00	1.00E 03	1.00E 03	1.00E 03	1.00E 03	1.00E 03
Cr-51	2.31E 04	3.88E 06	0.00E 00	0.00E 00	5.06E 03	1.28E 04	3.30E 04	0.00E 00
Mn-54	1.43E 06	1.48E 07	0.00E 00	7.20E 06	2.15E 06	0.00E 00	0.00E 00	0.00E 00
Fe-59	2.18E 07	1.34E 08	2.42E 07	5.65E 07	0.00E 00	0.00E 00	1.78E 07	0.00E 00
Co-58	8.70E 06	5.12E 07	0.00E 00	3.78E 06	0.00E 00	0.00E 00	0.00E 00	0.00E 00
Co-60	3.35E 07	1.94E 08	0.00E 00	1.49E 07	0.00E 00	0.00E 00	0.00E 00	0.00E 00
Zn-65	2.04E 09	1.85E 09	1.26E 09	4.38E 09	2.80E 09	0.00E 00	0.00E 00	0.00E 00
Sr-89	3.62E 07	1.50E 08	1.26E 09	0.00E 00	0.00E 00	0.00E 00	0.00E 00	0.00E 00
Sr-90	9.42E 09	1.07E 09	3.81E 10	0.00E 00	0.00E 00	0.00E 00	0.00E 00	0.00E 00
Zr-95	1.70E 02	5.70E 05	7.83E 02	2.47E 02	3.63E 02	0.00E 00	0.00E 00	0.00E 00
I-131	1.98E 08	7.31E 07	2.64E 08	3.69E 08	6.36E 08	1.08E 11	0.00E 00	0.00E 00
I-133	1.87E 06	4.64E 06	3.61E 06	6.13E 06	1.08E 07	8.56E 08	0.00E 00	0.00E 00
I-135	9.99E 03	2.99E 04	1.05E 04	2.70E 04	4.26E 04	1.74E 06	0.00E 00	0.00E 00
Cs-134	5.60E 09	1.50E 08	5.12E 09	1.21E 10	3.83E 09	0.00E 00	1.46E 09	0.00E 00
Cs-136	5.62E 08	6.73E 07	2.13E 08	8.37E 08	4.55E 08	0.00E 00	7.18E 07	0.00E 00
Cs-137	3.44E 09	1.40E 08	7.42E 09	9.87E 09	3.36E 09	0.00E 00	1.30E 09	0.00E 00
Ba-140	1.50E 06	3.58E 07	2.32E 07	2.84E 04	9.65E 03	0.00E 00	1.91E 04	0.00E 00
Ce-141	3.14E 02	7.83E 06	4.10E 03	2.74E 03	1.29E 03	0.00E 00	0.00E 00	0.00E 00
Ce-144	1.78E 04	8.33E 07	3.31E 05	1.37E 05	8.19E 04	0.00E 00	0.00E 00	0.00E 00
Nb-95	1.88E 04	1.46E 07	6.16E 04	3.42E 04	3.31E 04	0.00E 00	0.00E 00	0.00E 00
Ru-103	3.41E 02	6.67E 04	7.99E 02	0.00E 00	2.82E 03	0.00E 00	0.00E 00	0.00E 00

* R_i values are in units of mRem/yr per $\mu Ci/m^3$ for inhalation and tritium, and in units of m^2 mRem/yr per μCi/Sec for all others.

Table 16 R_i Values for the Monticello Nuclear Generating Plant Cow Milk Pathway Child Age Group

Nuclide	T. Body	GI Tract	Bone	Liver	Kidney	Thyroid	Lung	Skin
H-3	1.58E 03	1.58E 03	0.00E 00	1.58E 03	1.58E 03	1.58E 03	1.58E 03	1.58E 03
Cr-51	4.71E 04	2.50E 06	0.00E 00	0.00E 00	7.14E 03	2.61E 04	4.77E 04	0.00E 00
Mn-54	2.87E 06	9.04E 06	0.00E 00	1.08E 07	3.02E 06	0.00E 00	0.00E 00	0.00E 00
Fe-59	4.52E 07	9.45E 07	5.61E 07	9.08E 07	0.00E 00	0.00E 00	2.63E 07	0.00E 00
Co-58	1.77E 07	3.37E 07	0.00E 00	5.77E 06	0.00E 00	0.00E 00	0.00E 00	0.00E 00
Co-60	6.81E 07	1.28E 08	0.00E 00	2.31E 07	0.00E 00	0.00E 00	0.00E 00	0.00E 00
Zn-65	4.10E 09	1.16E 09	2.47E 09	6.59E 09	4.15E 09	0.00E 00	0.00E 00	0.00E 00
Sr-89	8.93E 07	1.21E 08	3.13E 09	0.00E 00	0.00E 00	0.00E 00	0.00E 00	0.00E 00
Sr-90	1.63E 10	8.68E 08	6.44E 10	0.00E 00	0.00E 00	0.00E 00	0.00E 00	0.00E 00
Zr-95	3.56E 02	4.17E 05	1.82E 03	4.00E 02	5.72E 02	0.00E 00	0.00E 00	0.00E 00
I-131	3.66E 08	5.73E 07	6.40E 08	6.44E 08	1.06E 09	2.13E 11	0.00E 00	0.00E 00
I-133	4.11E 06	4.38E 06	8.78E 06	1.09E 07	1.81E 07	2.02E 09	0.00E 00	0.00E 00
I-135	2.11E 04	3.40E 04	2.48E 04	4.46E 04	6.85E 04	3.95E 06	0.00E 00	0.00E 00
Cs-134	4.09E 09	1.05E 08	1.18E 10	1.94E 10	6.01E 09	0.00E 00	2.16E 09	0.00E 00
Cs-136	8.53E 08	4.63E 07	4.80E 08	1.32E 09	7.02E 08	0.00E 00	1.05E 08	0.00E 00
Cs-137	2.52E 09	1.07E 08	1.79E 10	1.71E 10	5.57E 09	0.00E 00	2.00E 09	0.00E 00
Ba-140	3.27E 06	2.84E 07	5.60E 07	4.91E 04	1.60E 04	0.00E 00	2.93E 04	0.00E 00
Ce-141	7.47E 02	6.28E 06	1.01E 04	5.03E 03	2.21E 03	0.00E 00	0.00E 00	0.00E 00
Ce-144	4.36E 04	6.68E 07	8.17E 05	2.56E 05	1.42E 05	0.00E 00	0.00E 00	0.00E 00
Nb-95	3.87E 04	1.00E 08	1.39E 05	5.41E 04	5.09E 04	0.00E 00	0.00E 00	0.00E 00
Ru-103	7.26E 02	4.88E 04	1.89E 03	0.00E 00	4.75E 03	0.00E 00	0.00E 00	0.00E 00

* R_i values are in units of mRem/yr per $\mu Ci/m^3$ for inhalation and tritium, and in units of m^2 mRem/yr per μCi/Sec for all others.

Table 17 R_i Values for the Monticello Nuclear Generating Plant Cow Milk Pathway Infant Age Group

Nuclide	T. Body	GI Tract	Bone	Liver	Kidney	Thyroid	Lung	Skin
H-3	2.40E 03	2.40E 03	0.00E 00	2.40E 03	2.40E 03	2.40E 03	2.40E 03	2.40E 03
Cr-51	7.46E 04	2.17E 06	0.00E 00	0.00E 00	1.06E 04	4.87E 04	9.47E 04	0.00E 00
Mn-54	4.54E 06	7.36E 06	0.00E 00	2.00E 07	4.44E 06	0.00E 00	0.00E 00	0.00E 00
Fe-59	7.21E 07	8.74E 07	1.05E 08	1.83E 08	0.00E 00	0.00E 00	5.41E 07	0.00E 00
Co-58	2.88E 07	2.88E 07	0.00E 00	1.15E 07	0.00E 00	0.00E 00	0.00E 00	0.00E 00
Co-60	1.11E 08	1.12E 08	0.00E 00	4.71E 07	0.00E 00	0.00E 00	0.00E 00	0.00E 00
Zn-65	5.26E 09	9.63E 09	3.32E 09	1.14E 10	5.53E 09	0.00E 00	0.00E 00	0.00E 00
Sr-89	1.70E 08	1.22E 08	5.94E 09	0.00E 00	0.00E 00	0.00E 00	0.00E 00	0.00E 00
Sr-90	1.79E 10	8.75E 08	7.01E 10	0.00E 00	0.00E 00	0.00E 00	0.00E 00	0.00E 00
Zr-95	5.58E 02	3.92E 05	3.23E 03	7.87E 02	8.48E 02	0.00E 00	0.00E 00	0.00E 00
I-131	6.92E 08	5.62E 07	1.34E 09	1.57E 09	1.84E 09	5.17E 11	0.00E 00	0.00E 00
I-133	7.91E 06	4.57E 06	1.85E 07	2.70E 07	3.17E 07	4.91E 09	0.00E 00	0.00E 00
I-135	3.74E 04	3.71E 04	5.16E 04	1.03E 05	1.14E 05	9.20E 06	0.00E 00	0.00E 00
Cs-134	3.59E 09	9.65E 07	1.90E 10	3.55E 10	9.14E 09	0.00E 00	3.75E 09	0.00E 00
Cs-136	1.03E 09	4.19E 07	9.37E 08	2.76E 09	1.10E 09	0.00E 00	2.25E 08	0.00E 00
Cs-137	2.37E 09	1.04E 08	2.85E 10	3.34E 10	8.96E 09	0.00E 00	3.63E 09	0.00E 00
Ba-140	5.94E 06	2.83E 07	1.15E 08	1.15E 05	2.74E 04	0.00E 00	7.08E 04	0.00E 00
Ce-141	1.44E 03	6.30E 06	2.00E 04	1.22E 04	3.76E 03	0.00E 00	0.00E 00	0.00E 00
Ce-144	6.56E 04	6.72E 07	1.17E 06	4.79E 05	1.94E 05	0.00E 00	0.00E 00	0.00E 00
Nb-95	6.18E 09	9.02E 07	2.59E 05	1.07E 05	7.66E 04	0.00E 00	0.00E 00	0.00E 00
Ru-103	1.28E 03	4.65E 04	3.82E 03	0.00E 00	7.96E 03	0.00E 00	0.00E 00	0.00E 00

* R_i values are in units of mRem/yr per $\mu Ci/m^3$ for inhalation and tritium, and in units of m^2 mRem/yr per $\mu Ci/Sec$ for all others.

Table 18 R_i Values for the Monticello Nuclear Generating Plant Goat Milk Pathway Adult Age Group

Nuclide	T. Body	GI Tract	Bone	Liver	Kidney	Thyroid	Lung	Skin
H-3	1.57E 03	1.57E 03	0.00E 00	1.57E 03	1.57E 03	1.57E 03	1.57E 03	1.57E 03
Cr-51	1.59E 03	3.99E 05	0.00E 00	0.00E 00	3.49E 02	9.48E 02	2.11E 03	0.00E 00
Mn-54	9.89E 04	1.59E 06	0.00E 00	0.00E 00	1.59E 05	9.48E 02	0.00E 00	0.00E 00
Fe-59	1.62E 05	1.41E 06	1.80E 05	4.23E 05	0.00E 00	0.00E 00	1.18E 05	0.00E 00
Co-58	6.03E 05	5.46E 06	0.00E 00	2.69E 05	0.00E 00	0.00E 00	0.00E 00	0.00E 00
Co-60	2.32E 06	1.98E 07	0.00E 00	1.05E 06	0.00E 00	0.00E 00	0.00E 00	0.00E 00
Zn-65	1.42E 08	1.97E 08	9.85E 07	3.14E 08	2.10E 08	0.00E 00	0.00E 00	0.00E 00
Sr-89	4.13E 07	2.31E 08	1.44E 09	0.00E 00	0.00E 00	0.00E 00	0.00E 00	0.00E 00
Sr-90	1.39E 10	1.64E 09	5.67E 10	0.00E 00	0.00E 00	0.00E 00	0.00E 00	0.00E 00
Zr-95	1.17E 01	5.46E 04	5.37E 01	1.72E 01	2.70E 01	0.00E 00	0.00E 00	0.00E 00
I-131	1.43E 08	6.59E 07	1.74E 08	2.50E 08	4.28E 08	8.18E 10	0.00E 00	0.00E 00
I-133	1.26E 06	3.71E 06	2.37E 06	4.13E 06	7.21E 06	6.07E 08	0.00E 00	0.00E 00
I-135	6.83E 03	2.09E 04	7.08E 03	1.85E 04	2.97E 04	1.22E 06	0.00E 00	0.00E 00
Cs-134	1.72E 10	3.69E 08	8.85E 09	2.11E 10	6.82E 09	0.00E 00	2.26E 09	0.00E 00
Cs-136	1.06E 09	1.68E 08	3.75E 08	1.48E 09	8.25E 08	0.00E 00	1.13E 08	0.00E 00
Cs-137	1.10E 10	3.25E 08	1.23E 10	1.68E 10	5.70E 09	0.00E 00	1.89E 09	0.00E 00
Ba-140	1.01E 05	3.18E 06	1.54E 06	1.94E 03	6.59E 02	0.00E 00	1.11E 03	0.00E 00
Ce-141	2.06E 01	6.94E 05	2.68E 02	1.81E 02	8.43E 01	0.00E 00	0.00E 00	0.00E 00
Ce-144	0.00E 00	0.00E 00	0.00E 00	0.00E 00	0.00E 00	0.00E 00	0.00E 00	0.00E 00
Nb-95	0.00E 00	0.00E 00	0.00E 00	0.00E 00	0.00E 00	0.00E 00	0.00E 00	0.00E 00
Ru-103	0.00E 00	0.00E 00	0.00E 00	0.00E 00	0.00E 00	0.00E 00	0.00E 00	0.00E 00

* R_i values are in units of mRem/yr per $\mu Ci/m^3$ for inhalation and tritium, and in units of m^2 mRem/yr per $\mu Ci/Sec$ for all others.

Table 19 R_i Values for the Monticello Nuclear Generating Plant Goat Milk Pathway Teen Age Group

Nuclide	T. Body	GI Tract	Bone	Liver	Kidney	Thyroid	Lung	Skin
H-3	2.04E 03	2.04E 03	0.00E 00	2.04E 03	2.04E 03	2.04E 03	2.04E 03	2.04E 03
Cr-51	2.77E 03	4.66E 05	0.00E 00	0.00E 00	6.07E 02	1.54E 02	3.95E 03	0.00E 00
Mn-54	1.71E 05	1.77E 06	0.00E 00	8.64E 05	2.58E 05	0.00E 00	0.00E 00	0.00E 00
Fe-59	2.83E 05	1.74E 06	3.14E 05	7.34E 05	0.00E 00	0.00E 00	2.31E 05	0.00E 00
Co-58	1.04E 06	6.25E 06	0.00E 00	4.53E 05	0.00E 00	0.00E 00	0.00E 00	0.00E 00
Co-60	4.02E 06	2.32E 07	0.00E 00	1.78E 06	0.00E 00	0.00E 00	0.00E 00	0.00E 00
Zn-65	2.45E 08	2.22E 08	1.51E 08	5.25E 08	3.36E 08	0.00E 00	0.00E 00	0.00E 00
Sr-89	7.59E 07	3.16E 08	2.65E 09	0.00E 00	0.00E 00	0.00E 00	0.00E 00	0.00E 00
Sr-90	1.98E 10	2.25E 09	8.01E 10	0.00E 00	0.00E 00	0.00E 00	0.00E 00	0.00E 00
Zr-95	2.04E 01	6.84E 04	9.40E 01	2.97E 01	4.36E 01	0.00E 00	0.00E 00	0.00E 00
I-131	2.38E 08	8.77E 07	3.17E 08	4.43E 08	7.63E 08	1.29E 11	0.00E 00	0.00E 00
I-133	2.24E 06	5.57E 06	4.34E 06	7.36E 06	1.29E 07	1.03E 09	0.00E 00	0.00E 00
I-135	1.20E 04	3.59E 04	1.26E 04	3.24E 04	5.11E 04	2.08E 06	0.00E 00	0.00E 00
Cs-134	1.68E 10	4.50E 08	1.54E 10	3.62E 10	1.15E 10	0.00E 00	4.39E 09	0.00E 00
Cs-136	1.69E 09	2.02E 08	6.38E 08	2.51E 09	1.37E 09	0.00E 00	2.15E 08	0.00E 00
Cs-137	1.03E 10	4.21E 08	2.22E 10	2.96E 10	1.01E 01	0.00E 00	3.91E 09	0.00E 00
Ba-140	1.80E 05	4.30E 06	2.79E 06	3.41E 03	1.16E 03	0.00E 00	2.30E 03	0.00E 00
Ce-141	3.77E 01	9.39E 05	4.92E 02	3.28E 02	1.55E 02	0.00E 00	0.00E 00	0.00E 00
Ce-144	0.00E 00	0.00E 00	0.00E 00	0.00E 00	0.00E 00	0.00E 00	0.00E 00	0.00E 00
Nb-95	0.00E 00	0.00E 00	0.00E 00	0.00E 00	0.00E 00	0.00E 00	0.00E 00	0.00E 00
Ru-103	0.00E 00	0.00E 00	0.00E 00	0.00E 00	0.00E 00	0.00E 00	0.00E 00	0.00E 00

* R_i values are in units of mRem/yr per $\mu Ci/m^3$ for inhalation and tritium, and in units of m^2 mRem/yr per $\mu Ci/Sec$ for all others.

Table 20 R_i Values for the Monticello Nuclear Generating Plant Goat Milk Pathway Child Age Group

Nuclide	T. Body	GI Tract	Bone	Liver	Kidney	Thyroid	Lung	Skin
H-3	3.23E 03	3.23E 03	0.00E 00	3.23E 03	3.23E 03	3.23E 03	3.23E 03	3.23E 03
Cr-51	5.65E 03	3.00E 05	0.00E 00	0.00E 00	8.57E 02	3.14E 03	5.73E 03	0.00E 00
Mn-54	3.44E 05	1.08E 06	0.00E 00	1.29E 06	3.62E 05	0.00E 00	0.00E 00	0.00E 00
Fe-59	5.88E 05	1.23E 06	7.29E 05	1.18E 05	0.00E 00	0.00E 00	3.42E 05	0.00E 00
Co-58	2.12E 06	4.04E 06	0.00E 00	6.92E 05	0.00E 00	0.00E 00	0.00E 00	0.00E 00
Co-60	8.17E 06	1.53E 07	0.00E 00	2.77E 06	0.00E 00	0.00E 00	0.00E 00	0.00E 00
Zn-65	4.92E 08	1.39E 08	2.97E 08	7.19E 08	4.98E 08	0.00E 00	0.00E 00	0.00E 00
Sr-89	1.87E 08	2.54E 08	6.56E 09	0.00E 00	0.00E 00	0.00E 00	0.00E 00	0.00E 00
Sr-90	3.43E 10	1.82E 09	1.35E 11	0.00E 00	0.00E 00	0.00E 00	0.00E 00	0.00E 00
Zr-95	4.27E 01	5.01E 04	2.18E 02	4.80E 01	6.87E 01	0.00E 00	0.00E 00	0.00E 00
I-131	4.39E 08	6.88E 07	7.68E 08	7.72E 08	1.27E 09	2.55E 11	0.00E 00	0.00E 00
I-133	4.93E 06	5.25E 06	1.05E 07	1.30E 07	2.17E 07	2.42E 09	0.00E 00	0.00E 00
I-135	2.53E 04	4.08E 04	2.98E 04	5.36E 04	8.22E 04	4.74E 06	0.00E 00	0.00E 00
Cs-134	1.23E 10	3.14E 08	3.55E 10	5.82E 10	1.80E 10	0.00E 00	6.47E 09	0.00E 00
Cs-136	2.56E 09	1.39E 08	1.44E 09	3.96E 09	2.11E 09	0.00E 00	3.14E 08	0.00E 00
Cs-137	7.57E 09	3.21E 08	5.36E 10	5.13E 10	1.67E 10	0.00E 00	6.01E 09	0.00E 00
Ba-140	3.92E 05	3.41E 06	6.72E 06	5.89E 03	1.92E 03	0.00E 00	3.51E 03	0.00E 00
Ce-141	8.97E 01	7.45E 05	1.21E 03	6.04E 02	2.65E 02	0.00E 00	0.00E 00	0.00E 00
Ce-144	0.00E 00	0.00E 00	0.00E 00	0.00E 00	0.00E 00	0.00E 00	0.00E 00	0.00E 00
Nb-95	0.00E 00	0.00E 00	0.00E 00	0.00E 00	0.00E 00	0.00E 00	0.00E 00	0.00E 00
Ru-103	0.00E 00	0.00E 00	0.00E 00	0.00E 00	0.00E 00	0.00E 00	0.00E 00	0.00E 00

* R_i values are in units of mRem/yr per $\mu Ci/m^3$ for inhalation and tritium, and in units of m^2 mRem/yr per μCi/Sec for all others.

Table 21 R_i Values for the Monticello Nuclear Generating Plant Goat Milk Pathway Infant Age Group

Nuclide	T. Body	GI Tract	Bone	Liver	Kidney	Thyroid	Lung	Skin
H-3	4.90E 03	4.90E 03	0.00E 00	4.90E 03	4.90E 03	4.90E 03	4.90E 03	4.90E 03
Cr-51	8.95E 03	2.61E 05	0.00E 00	0.00E 00	1.28E 03	5.84E 03	1.14E 04	0.00E 00
Mn-54	5.45E 05	8.83E 06	0.00E 00	2.40E 06	5.33E 05	0.00E 00	0.00E 00	0.00E 00
Fe-59	9.37E 05	1.14E 06	1.36E 06	2.38E 06	0.00E 00	0.00E 00	7.03E 05	0.00E 00
Co-58	3.45E 06	3.45E 06	0.00E 00	1.38E 06	0.00E 00	0.00E 00	0.00E 00	0.00E 00
Co-60	1.34E 07	1.35E 07	0.00E 00	5.65E 06	0.00E 00	0.00E 00	0.00E 00	0.00E 00
Zn-65	6.31E 08	1.16E 09	3.99E 08	1.37E 09	6.63E 08	0.00E 00	0.00E 00	0.00E 00
Sr-89	3.58E 08	2.57E 08	1.25E 10	0.00E 00	0.00E 00	0.00E 00	0.00E 00	0.00E 00
Sr-90	3.75E 10	1.84E 09	1.47E 11	0.00E 00	0.00E 00	0.00E 00	0.00E 00	0.00E 00
Zr-95	6.70E 01	4.70E 04	3.88E 02	9.45E 01	1.02E 02	0.00E 00	0.00E 00	0.00E 00
I-131	8.31E 08	6.74E 07	1.60E 09	1.89E 09	2.21E 09	6.21E 11	0.00E 00	0.00E 00
I-133	9.49E 06	5.48E 06	2.23E 07	3.24E 07	3.81E 07	5.89E 09	0.00E 00	0.00E 00
I-135	4.49E 04	4.46E 04	6.19E 04	1.23E 05	1.37E 05	1.10E 07	0.00E 00	0.00E 00
Cs-134	1.08E 10	2.89E 08	5.71E 10	1.07E 11	2.74E 10	0.00E 00	1.12E 10	0.00E 00
Cs-136	3.09E 09	1.26E 08	2.81E 09	8.27E 09	3.30E 09	0.00E 00	6.74E 08	0.00E 00
Cs-137	7.10E 09	3.13E 08	8.55E 10	1.00E 11	2.69E 10	0.00E 00	1.09E 10	0.00E 00
Ba-140	7.13E 05	3.40E 06	1.38E 04	1.38E 07	3.29E 03	0.00E 00	8.50E 03	0.00E 00
Ce-141	1.72E 02	7.57E 05	2.40E 03	1.46E 03	4.52E 02	0.00E 00	0.00E 00	0.00E 00
Ce-144	0.00E 00	0.00E 00	0.00E 00	0.00E 00	0.00E 00	0.00E 00	0.00E 00	0.00E 00
Nb-95	0.00E 00	0.00E 00	0.00E 00	0.00E 00	0.00E 00	0.00E 00	0.00E 00	0.00E 00
Ru-103	0.00E 00	0.00E 00	0.00E 00	0.00E 00	0.00E 00	0.00E 00	0.00E 00	0.00E 00

* R_i values are in units of mRem/yr per $\mu Ci/m^3$ for inhalation and tritium, and in units of m^2 mRem/yr per μCi/Sec for all others.

Table 22 R_i Values for the Monticello Nuclear Generating Plant Inhalation Pathway Adult Age Group

Nuclide	T. Body	GI Tract	Bone	Liver	Kidney	Thyroid	Lung	Skin
H-3	1.26E 03	1.26E 03	0.00E 00	1.26E 03	1.26E 03	1.26E 03	1.26E 03	1.26E 03
Cr-51	9.99E 01	3.32E 03	0.00E 00	0.00E 00	2.28E 01	5.94E 01	1.44E 04	0.00E 00
Mn-54	6.29E 03	7.72E 04	0.00E 00	3.95E 04	9.83E 03	0.00E 00	4.10E 06	0.00E 00
Fe-59	1.05E 04	1.88E 05	1.17E 04	2.77E 04	0.00E 00	0.00E 00	1.01E 06	0.00E 00
Co-58	2.07E 03	1.06E 05	0.00E 00	1.58E 03	0.00E 00	0.00E 00	9.27E 05	0.00E 00
Co-60	1.48E 04	2.84E 05	0.00E 00	1.15E 04	0.00E 00	0.00E 00	5.96E 06	0.00E 00
Zn-65	4.65E 04	5.34E 04	3.24E 04	1.03E 05	6.89E 04	0.00E 00	8.63E 05	0.00E 00
Sr-89	8.71E 03	3.49E 05	3.04E 05	0.00E 00	0.00E 00	0.00E 00	1.40E 06	0.00E 00
Sr-90	6.09E 06	7.21E 05	9.91E 07	0.00E 00	0.00E 00	0.00E 00	9.59E 06	0.00E 00
Zr-95	2.32E 04	1.50E 05	1.07E 05	3.44E 04	5.41E 04	0.00E 00	1.77E 06	0.00E 00
I-131	2.05E 04	6.27E 03	2.52E 04	3.57E 04	6.12E 04	1.19E 07	0.00E 00	0.00E 00
I-133	4.51E 03	8.87E 03	8.63E 03	1.48E 04	2.58E 04	2.15E 06	0.00E 00	0.00E 00
I-135	2.57E 03	5.25E 03	2.68E 03	6.98E 03	1.11E 04	4.48E 05	0.00E 00	0.00E 00
Cs-134	7.27E 05	1.04E 04	3.72E 05	8.47E 05	2.87E 05	0.00E 00	9.75E 04	0.00E 00
Cs-136	1.10E 05	1.17E 04	3.90E 04	1.46E 05	8.55E 04	0.00E 00	1.20E 04	0.00E 00
Cs-137	4.27E 05	8.39E 03	4.78E 05	6.20E 05	2.22E 05	0.00E 00	7.51E 04	0.00E 00
Ba-140	2.56E 03	2.18E 05	3.90E 04	4.90E 01	1.67E 01	0.00E 00	1.27E 06	0.00E 00
Ce-141	1.53E 03	1.20E 05	1.99E 04	1.35E 04	6.25E 03	0.00E 00	3.61E 05	0.00E 00
Ce-144	1.84E 05	8.16E 05	3.43E 06	1.43E 06	8.48E 05	0.00E 00	7.78E 06	0.00E 00
Nb-95	4.21E 03	1.04E 05	1.41E 03	7.82E 03	7.72E 03	0.00E 00	5.05E 05	0.00E 00
Ru-103	6.58E 02	1.10E 05	1.53E 03	0.00E 00	5.83E 03	0.00E 00	5.05E 05	0.00E 00

* R_i values are in units of mRem/yr per $\mu Ci/m^3$ for inhalation and tritium, and in units of m^2 mRem/yr per μCi/Sec for all others.

Table 23 R_i Values for the Monticello Nuclear Generating Plant Inhalation Pathway Teen Age Group

Nuclide	T. Body	GI Tract	Bone	Liver	Kidney	Thyroid	Lung	Skin
H-3	1.27E 03	1.27E 03	0.00E 00	1.27E 03	1.27E 03	1.27E 03	1.27E 03	1.27E 03
Cr-51	1.35E 02	3.00E 03	0.00E 00	0.00E 00	3.07E 01	7.49E 01	2.09E 04	0.00E 00
Mn-54	8.39E 03	6.67E 04	0.00E 00	5.10E 04	1.27E 04	0.00E 00	1.98E 06	0.00E 00
Fe-59	1.43E 04	1.78E 05	1.59E 04	3.69E 04	0.00E 00	0.00E 00	1.53E 06	0.00E 00
Co-58	2.77E 03	9.51E 04	0.00E 00	2.07E 03	0.00E 00	0.00E 00	1.34E 06	0.00E 00
Co-60	1.98E 04	2.59E 05	0.00E 00	1.51E 04	0.00E 00	0.00E 00	8.71E 06	0.00E 00
Zn-65	6.23E 04	4.66E 04	3.85E 04	1.33E 05	8.63E 04	0.00E 00	1.24E 06	0.00E 00
Sr-89	1.25E 04	3.71E 05	4.34E 05	0.00E 00	0.00E 00	0.00E 00	2.41E 06	0.00E 00
Sr-90	6.67E 06	7.64E 05	1.08E 08	0.00E 00	0.00E 00	0.00E 00	1.65E 07	0.00E 00
Zr-95	3.15E 04	1.49E 05	1.45E 05	4.58E 04	6.73E 04	0.00E 00	2.68E 06	0.00E 00
I-131	2.64E 04	6.48E 03	3.54E 04	4.90E 04	8.39E 04	1.46E 07	0.00E 00	0.00E 00
I-133	6.21E 03	1.03E 04	1.21E 04	2.05E 04	3.59E 04	2.92E 06	0.00E 00	0.00E 00
I-135	3.49E 03	6.95E 03	3.70E 03	9.44E 03	1.49E 04	6.21E 05	0.00E 00	0.00E 00
Cs-134	5.48E 05	9.75E 03	5.02E 05	1.13E 05	3.75E 05	0.00E 00	1.46E 05	0.00E 00
Cs-136	1.37E 05	1.09E 04	5.14E 04	1.93E 05	1.10E 05	0.00E 00	1.77E 04	0.00E 00
Cs-137	3.11E 05	8.47E 03	6.69E 05	8.47E 05	3.04E 05	0.00E 00	1.21E 05	0.00E 00
Ba-140	3.51E 03	2.28E 05	5.46E 04	6.69E 01	2.28E 01	0.00E 00	2.03E 06	0.00E 00
Ce-141	2.16E 03	1.26E 05	2.84E 04	1.89E 04	8.87E 03	0.00E 00	6.13E 05	0.00E 00
Ce-144	2.62E 05	8.64E 05	4.89E 06	2.02E 06	1.21E 06	0.00E 00	1.34E 07	0.00E 00
Nb-95	5.66E 03	9.68E 04	1.86E 04	1.03E 04	1.00E 04	0.00E 00	7.51E 05	0.00E 00
Ru-103	8.96E 02	1.09E 05	2.10E 03	0.00E 00	7.43E 03	0.00E 00	7.83E 05	0.00E 00

* R_i values are in units of mRem/yr per $\mu Ci/m^3$ for inhalation and tritium, and in units of m^2 mRem/yr per $\mu Ci/Sec$ for all others.

Table 24 R_i Values for the Monticello Nuclear Generating Plant Inhalation Pathway Child Age Group

Nuclide	T. Body	GI Tract	Bone	Liver	Kidney	Thyroid	Lung	Skin
H-3	1.21E 03	1.12E 03	0.00E 00	1.12E 03	1.12E 03	1.12E 03	1.12E 03	1.12E 03
Cr-51	1.54E 02	1.08E 03	0.00E 00	0.00E 00	2.43E 01	8.53E 01	1.70E 04	0.00E 00
Mn-54	9.50E 03	2.29E 04	0.00E 00	4.29E 04	1.00E 04	0.00E 00	1.57E 06	0.00E 00
Fe-59	1.67E 04	7.06E 04	2.07E 04	3.34E 04	0.00E 00	0.00E 00	1.27E 06	0.00E 00
Co-58	3.16E 03	3.43E 04	0.00E 00	1.77E 03	0.00E 00	0.00E 00	1.10E 06	0.00E 00
Co-60	2.26E 04	9.61E 04	0.00E 00	1.31E 04	0.00E 00	0.00E 00	7.06E 06	0.00E 00
Zn-65	7.02E 04	1.63E 04	4.25E 04	1.13E 05	7.13E 04	0.00E 00	9.94E 05	0.00E 00
Sr-89	1.72E 04	1.67E 05	5.99E 05	0.00E 00	0.00E 00	0.00E 00	2.15E 06	0.00E 00
Sr-90	6.43E 06	3.43E 05	1.01E 08	0.00E 00	0.00E 00	0.00E 00	1.47E 07	0.00E 00
Zr-95	3.69E 04	6.10E 04	1.90E 05	4.17E 04	5.95E 04	0.00E 00	2.23E 06	0.00E 00
I-131	2.72E 04	2.84E 03	4.80E 04	4.80E 04	7.87E 04	1.62E 07	0.00E 00	0.00E 00
I-133	7.68E 03	5.47E 03	1.66E 04	2.03E 04	3.37E 04	3.84E 06	0.00E 00	0.00E 00
I-135	4.14E 03	4.44E 03	4.92E 03	8.73E 03	1.34E 04	7.92E 05	0.00E 00	0.00E 00
Cs-134	2.24E 05	3.84E 03	6.50E 05	1.01E 05	3.30E 05	0.00E 00	1.21E 05	0.00E 00
Cs-136	1.16E 05	4.17E 03	6.50E 04	1.71E 05	9.53E 04	0.00E 00	1.45E 04	0.00E 00
Cs-137	1.28E 05	3.61E 03	9.05E 05	8.24E 05	2.82E 05	0.00E 00	1.04E 05	0.00E 00
Ba-140	4.32E 03	1.02E 05	7.39E 04	6.47E 01	2.11E 01	0.00E 00	1.74E 06	0.00E 00
Ce-141	2.89E 03	5.65E 04	3.92E 04	1.95E 04	8.53E 03	0.00E 00	5.43E 05	0.00E 00
Ce-144	3.61E 05	3.88E 05	6.77E 06	2.12E 06	1.17E 06	0.00E 00	1.19E 07	0.00E 00
Nb-95	6.55E 03	3.70E 04	2.35E 04	9.18E 03	8.62E 03	0.00E 00	6.14E 05	0.00E 00
Ru-103	1.07E 03	4.48E 04	2.79E 03	0.00E 00	7.03E 03	0.00E 00	6.62E 05	0.00E 00

* R_i values are in units of mRem/yr per $\mu Ci/m^3$ for inhalation and tritium, and in units of m^2 mRem/yr per $\mu Ci/Sec$ for all others.

Table 25 R_i Values for the Monticello Nuclear Generating Plant Inhalation Pathway Infant Age Group

Nuclide	T. Body	GI Tract	Bone	Liver	Kidney	Thyroid	Lung	Skin
H-3	6.46E 02	6.46E 02	0.00E 00	6.46E 02	6.46E 02	6.46E 02	6.46E 02	6.46E 02
Cr-51	8.93E 01	3.56E 02	0.00E 00	0.00E 00	1.32E 01	5.75E 01	1.28E 04	0.00E 00
Mn-54	4.98E 03	7.05E 03	0.00E 00	2.53E 04	4.98E 03	0.00E 00	9.98E 05	0.00E 00
Fe-59	9.46E 03	2.47E 04	1.35E 04	2.35E 04	0.00E 00	0.00E 00	1.01E 06	0.00E 00
Co-58	1.82E 03	1.11E 04	0.00E 00	1.22E 03	0.00E 00	0.00E 00	7.76E 05	0.00E 00
Co-60	1.18E 04	3.19E 04	0.00E 00	8.01E 03	0.00E 00	0.00E 00	4.50E 06	0.00E 00
Zn-65	3.10E 04	5.13E 04	1.93E 04	6.25E 04	3.24E 04	0.00E 00	6.46E 05	0.00E 00
Sr-89	1.14E 04	6.39E 05	3.97E 05	0.00E 00	0.00E 00	0.00E 00	2.03E 06	0.00E 00
Sr-90	2.59E 06	1.31E 05	4.08E 07	0.00E 00	0.00E 00	0.00E 00	1.12E 07	0.00E 00
Zr-95	2.03E 04	2.17E 04	1.15E 05	2.78E 04	3.10E 00	0.00E 00	1.75E 06	0.00E 00
I-131	1.96E 04	1.06E 03	3.79E 04	4.43E 04	5.17E 04	1.48E 07	0.00E 00	0.00E 00
I-133	5.59E 03	2.15E 03	1.32E 04	1.92E 04	2.24E 04	3.55E 06	0.00E 00	0.00E 00
I-135	2.27E 03	1.83E 03	3.86E 03	7.60E 03	8.47E 03	6.96E 05	0.00E 00	0.00E 00
Cs-134	7.44E 04	1.33E 03	3.96E 05	7.02E 05	1.90E 05	0.00E 00	7.95E 04	0.00E 00
Cs-136	5.28E 04	1.43E 03	4.82E 04	1.34E 05	5.63E 04	0.00E 00	1.17E 04	0.00E 00
Cs-137	4.54E 04	1.33E 03	5.48E 05	6.11E 05	1.72E 05	0.00E 00	7.12E 04	0.00E 00
Ba-140	2.89E 03	3.83E 04	5.59E 04	5.59E 01	1.34E 01	0.00E 00	1.59E 06	0.00E 00
Ce-141	1.99E 03	2.15E 04	2.77E 04	1.66E 04	5.24E 03	0.00E 00	5.16E 05	0.00E 00
Ce-144	1.76E 05	1.48E 05	3.19E 06	1.21E 06	5.38E 06	0.00E 00	9.84E 06	0.00E 00
Nb-95	3.78E 03	1.27E 04	1.57E 04	4.79E 05	4.72E 03	0.00E 00	4.79E 05	0.00E 00
Ru-103	6.79E 02	1.61E 04	2.02E 03	0.00E 00	4.24E 03	0.00E 00	5.52E 05	0.00E 00

* R_i values are in units of mRem/yr per $\mu Ci/m^3$ for inhalation and tritium, and in units of m^2 mRem/yr per $\mu Ci/Sec$ for all others.

Table 26 Table of Radioisotope Constants Used by EBARR

i	Isotope	Fission Yield	Decay Constant
1	Xe-133	0.0669	0.00000152
2	Xe-135	0.0630	0.0000210
3	Kr-85m	0.0130	0.0000438
3	Kr-88	0.0356	0.00000690
4	Kr-87	0.0253	0.000152
5	Xe-138	0.0590	0.000814
6	Kr-90	0.0500	0.0210
7	Xe-139	0.0540	0.0169
8	Kr-89	0.0459	0.00361
10	Xe-137	0.0600	0.00296
11	Xe-135m	0.00720	0.000722
12	Kr-83m	0.00520	0.000103
13	Xe-133m	0.00160	0.00000348
14	Xe-131m	0.000170	0.000000668
15	Kr-85	0.00271	0.00000000204

OFFSITE DOSE CALCULATION MANUAL - TABLE OF CONTENTS

SECTION		PAGE
1.0	RECORD OF REVISION	2
2.0	DOSE FROM ALL URANIUM FUEL CYCLE SOURCES	3
2.1	Dose Commitment	3
2.2	Bases	4

Prepared By:	
Reviewed By:	
OC Final Review Meeting: # 2242	Date: 11/02/2000
Approved By Plant Manager:	Date:

*This is a major rewrite, therefore, no sidelines are required.

3087 (DOCUMENT CHANGE, HOLD, AND COMMENT FORM) incorporated: 97-0541			
Resp Supv: CHEM	Assoc Ref: CHEM-I	SR: N	Freq: 2 yrs
ARMS: ODCM-06.01	Doc Type: 7030	Admin Initials:	Date:

l/plr

1.0 RECORD OF REVISION

Revision No.	Date	Reason for Revision
1	October - 2000	Moved previous ODCM-04.01 (INFORMATION RELATED TO 40CFR190 and 40CFR141) into this document, changed the title to "DOSE FROM ALL URANIUM FUEL CYCLE SOURCES" and incorporated Tech Specs section 3.8.D and 4.8.D into document.

2.0 DOSE FROM ALL URANIUM FUEL CYCLE SOURCES

2.1 Dose Commitment

2.1.1 Controls

A. In accordance with T.S.6.8.D.10, the dose or dose commitment to any member of the public from all uranium fuel cycle sources is limited to less than or equal to 25 mrem to the total body or any organ, except for the thyroid, which ***SHALL*** be limited to less than or equal to 75 mrem over a period of 12 consecutive months.

2.1.2 Applicability

At all times

2.1.3 Action

A. With the calculated dose from the release of radioactive materials in liquid or gaseous effluents exceeding twice the limits of Controls ODCM-02.01 Section 2.2.1, ODCM-03.01 Section 2.2.1 or ODCM-03.01 Section 2.3.1, prepare and submit within 30 days a special report to the Commission which includes the following:

1. Defines corrective actions and calculates the highest radiation exposure to any member of the general public from all uranium fuel cycle sources (including all effluent pathways and direct radiation).

2. Unless this report shows that exposures are less than the 40CFR Part 190 standard, either apply to the Commission for a variance to continue releases which exceed the 40CFR Part 190 standard or reduce subsequent releases to permit the standard to be met.

2.1.4 Surveillance Requirements

A. Cumulative dose contributions from all liquid and gaseous effluents ***SHALL*** be determined in accordance with surveillance requirements ODCM-02.01 Section 2.2.4, ODCM-03.01 Section 2.2.4, and ODCM-03.01 Section 2.3.4 and in accordance with the ODCM.

2.2 Bases

2.2.1 Dose From All Uranium Fuel Cycle Sources

A. Dose Commitment

Control 2.1.1.A. is provided to meet the dose limitations of 40CFR190. The specification requires the preparation and submittal of a special report whenever the calculated doses from plant radioactive effluents exceed twice the design objective doses of Appendix I. Submittal of the report is considered a timely request and a variance is granted until Staff action on the request is complete. For sites containing up to 4 reactors, it is highly unlikely that the resultant dose to a real individual will exceed 40CFR190 if the individual reactors remain with the reporting requirement level. For the purpose of the special report it may be assumed that the dose commitment to the real individual from other uranium fuel cycle source is negligible, with the exception that dose contributions from other nuclear fuel cycle facilities at the same site or within a radius of 5 miles must be considered.

OFFSITE DOSE CALCULATION MANUAL - TABLE OF CONTENTS

SECTION		PAGE
1.0	RECORD OF REVISION	2
2.0	RADIOLOGICAL ENVIRONMENTAL MONITORING PROGRAM	3
2.1	Monitoring Program	3
2.2	Land Use Census	5
2.3	Sampling	6
2.4	Interlaboratory Comparison Program	7
2.5	Bases	8
Figure 1	Radiation Environmental Monitoring Program Sampling Locations	9
Figure 2	4 - 5 Mile Ring, Control and Special Interest TLD Locations	10
Figure 3	Site Boundary TLD Locations	11
Table 1	Monticello Nuclear Generating Plant Radiological Environmental Monitoring Program Sample Collection and Analysis	12
Table 2	Reporting Levels for Radioactivity Concentrations in Environmental Samples (Reporting Levels)	17
Table 3	Maximum Values for the Lower Limits of Detection (LLD)[a,e]	18
Table 4	Monticello Nuclear Generating Plant Radiological Environmental Monitoring Program Sampling Locations	20

Prepared By:	
Reviewed By:	
OC Final Review Meeting: # 2242	Date: 11/02/2000
Approved By Plant Manager:	Date:

*This is a major rewrite, therefore, no sidelines are required.

3087 (DOCUMENT CHANGE, HOLD, AND COMMENT FORM) incorporated: 00-2349			
Resp Supv: CHEM	Assoc Ref: CHEM-I	SR: N	Freq: 2 yrs
ARMS: ODCM-07.01	Doc Type: 7030	Admin Initials:	Date:

l/plr

1.0 RECORD OF REVISION

Revision No.	Date	Reason for Revision
1	October - 2000	Moved previous ODCM-05.01 (RADIATION ENVIRONMENTAL MONITORING PROGRAM) into this document, changed the title to "RADIOLOGICAL ENVIRONMENTAL MONITORING PROGRAM" and incorporated Tech Spec section 4.16 "Radiation Environmental Monitoring Program" into this document.

2.0 RADIOLOGICAL ENVIRONMENTAL MONITORING PROGRAM

2.1 Monitoring Program

2.1.1 Controls

A. In accordance with T.S.6.8.A, the Radiological Environmental Monitoring Program (REMP) ***SHALL*** be conducted as specified in Table 1.

B. Radioanalysis ***SHALL*** be conducted meeting the requirements of Table 3.

2.1.2 Applicability

At all times.

2.1.3 Action

A. Whenever the Radiological Environmental Monitoring Program is not being conducted as specified in Table 1 the Annual Radiological Environmental Operating Report ***SHALL*** include a description of the reasons for not conducting the program as required and plans for preventing a recurrence.

B. Deviations are permitted from the required sampling schedule if samples are unobtainable due to hazardous conditions, seasonable unavailability, or to malfunctions of automatic sampling equipment. If the latter occurs, every effort ***SHALL*** be made to complete corrective action prior to the end of the next sampling period.

C. With the level of radioactivity in an environmental sampling medium exceeding the reporting levels of Table 2 when averaged over any calendar quarter, submit a special report to the Commission within 30 days from the end of the affected calendar quarter pursuant to ODCM-08.01. When more than one of the radionuclides in Table 2 are detected in the sampling medium, this report ***SHALL*** be submitted if:

$$\frac{\text{concentration (1)}}{\text{limit level (1)}} + \frac{\text{concentration (2)}}{\text{limit level (2)}} + \ldots > 1.0$$

When radionuclides other than those in Table 2 are detected and are the result of plant effluents, this report ***SHALL*** be submitted if the potential annual dose to an individual is equal to or greater than the calendar year limits of ODCM-02.01 Control 1.2.1.A, ODC-M-03.01 Control 1.2.1.A, or ODCM-03.01 Control 1.3.1.A. This report is not required if the measured level of radioactivity was not the result of plant effluents; however, in such an event, the condition ***SHALL*** be reported and described in the Annual Radiological Environmental Operating Report.

D. Although deviations from the sampling schedule are permitted under Paragraph B. above, whenever milk or leafy green vegetation samples can no longer be obtained from the designated sample locations required by Table 1, the Annual Radiological Environmental Operating Report ***SHALL*** explain why the samples can no longer be obtained and identify the new locations which have been or will be added to and deleted from the monitoring program.

2.1.4 Surveillance Requirements

The radiological environmental monitoring samples ***SHALL*** be collected pursuant to Table 1 from the specific locations in Table 4 and ***SHALL*** be analyzed pursuant to the requirements of Table 1 and the detection capabilities required by Table 3.

2.2 Land Use Census

2.2.1 Controls

A Land Use Census ***SHALL*** be conducted and ***SHALL*** identify:

A. The location of the nearest milk animal, the nearest residence, and the nearest garden of greater than 500 ft^2 producing fresh leafy vegetables in each of the 16 meteorological sectors within a distance of 5 miles.

B. The location of ALL milk animals and ALL 500 ft^2 or greater gardens producing broad leaf vegetation in each of the meteorological sectors within a distance of 3 miles.

2.2.2 Applicability

At all times.

2.2.3 Action

A. With a Land Use Census identifying a location which yields a calculated dose or dose commitment (via the same exposure pathway) 20 percent greater than at a location from which samples are currently being obtained in accordance with Controls 2.1.1.A., the Annual Radioactive Effluent Release Report for this period ***SHALL*** identify the new location. The new location ***SHALL*** be added to the Radiological Environmental Monitoring Program within 30 days. The sampling location, excluding the control station location, having the lowest calculated dose or dose commitment (via the same exposure pathway) may be deleted from this monitoring program after October 31 of the year in which this Land Use Census was conducted.

2.2.4 Surveillance Requirements

A. The Land Use Census ***SHALL*** be conducted at least once per year between the dates of May 1 and October 31 by door to door survey, aerial survey, or by consulting local agricultural authorities associations.

2.3 Sampling

Table 1 and Figure 1 specify the current sampling locations for the radiation environmental monitoring program. These sampling locations are based on the latest land use census.

If it is learned from an annual census that milk animals or gardens are present at the location which yields a calculated thyroid dose greater than those locations previously sampled, the new milk animal or garden locations resulting in the higher calculated doses ***SHALL*** be added to the surveillance program as soon as practicable. Sample locations (except the control) having lower calculated doses may be dropped from the program at the end of the grazing or growing season (October 31) to keep the total number of sample locations constant.

If the plant begins routine discharges of liquid radioactive effluent into the Mississippi River, a land use survey will be conducted to determine whether any crops are irrigated with water taken from the Mississippi River between the plant discharge canal and a point 5 miles downstream. If edible crops are being irrigated from Mississippi River water, appropriate samples will be collected and analyzed per Table 1.

2.4 Interlaboratory Comparison Program

2.4.1 Controls

A. Analyses ***SHALL*** be performed on radioactive materials supplied as part of an NRC approved crosscheck program. This program involves the analyses of samples provided by a control laboratory and comparison of results with those of the control laboratory as well as with other laboratories which receive portions of the same samples. Media used in this program (air, milk, water, etc.) ***SHALL*** be limited to those found in the Radiological Environmental Monitoring Program.

2.4.2 Applicability

At all times.

2.4.3 Action

A. When required analyses are not performed, corrective action ***SHALL*** be reported in the Annual Radiological Environmental Operating Report.

2.4.4 Surveillance Requirements

A. The summary results of analyses performed as part of the above required program ***SHALL*** be included in the Annual Radiological Environmental Operating Report.

2.5 Bases

2.5.1 Monitoring Program

Control 2.1.1 provides measurements of radiation and radioactive materials in those exposure pathways and for those radionuclides which lead to the highest potential radiation exposures of individuals resulting from the plant operation. This program thereby supplements the radiological effluent monitoring by verifying that the measurable concentrations of radioactive materials and levels of radiation are not higher than expected on the basis of the effluent measurements and modeling of the environmental exposure pathways. After a specific program has been in effect for at least 3 years of operation, program changes may be initiated based on this experience.

The detection capabilities required by Table 1 are state-of-the art for routine environmental measurements in industrial laboratories. The LLDs for drinking water meet the requirement of 40CFR Part 141.

2.5.2 Land Use Census

Control 2.2.1 is provided to ensure that changes in the use of off-site areas are identified and that modifications to the monitoring program are made if required by the results of this census. The best survey information from door-to-door, aerial or consulting with local agricultural authorities ***SHALL*** be used. This census satisfies the requirements of Section IV.B.3 of Appendix I to 10CFR Part 50. Restricting the census to gardens of greater than 500 square feet provides assurance that significant exposure pathways via leafy vegetables will be identified and monitored since a garden of this size is the minimum required to produce the quantity (26 kg/year) of leafy vegetables assumed in Regulatory Guide 1.109 for consumption by a child. To determine this minimum garden size, the following assumptions were used: 1) that 20% of the garden was used for growing broad leaf vegetation (i.e., similar to lettuce and cabbage), and 2) a vegetation yield of 2 kg/square meter.

2.5.3 Sampling

Section 2.3, paragraph 3, is worded to conform to LAR-39 and its associated NRC Safety Evaluation (SER).

2.5.4 Interlaboratory Comparison Program

The requirement for participation in an interlaboratory comparison program is provided to ensure that independent checks on the precision and accuracy of the measurements of radioactive material in environmental sample matrices are performed as part of a quality assurance program for environmental monitoring in order to demonstrate that the results are reasonably valid.

Figure 1 Radiation Environmental Monitoring Program Sampling Locations

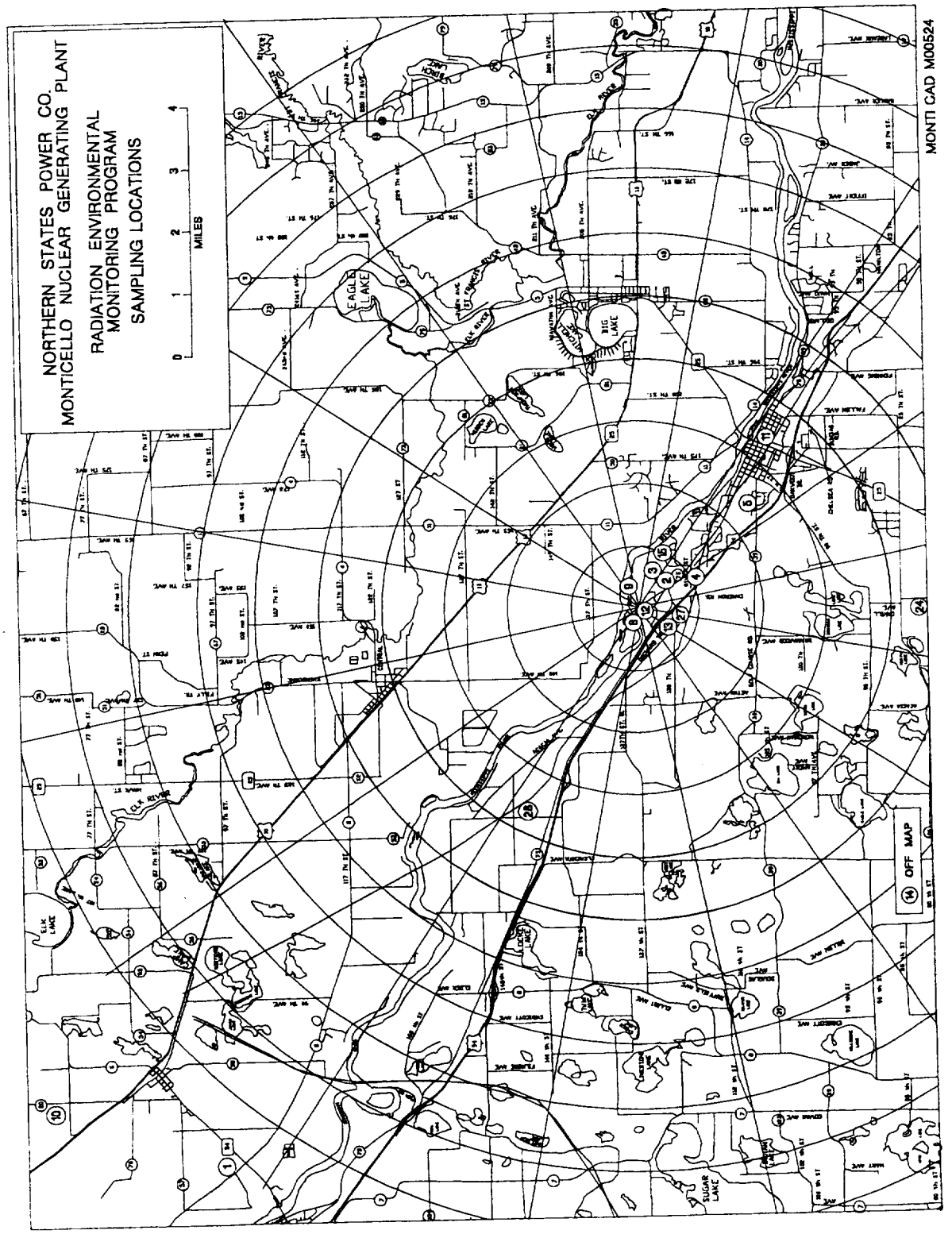

Figure 2 4 - 5 Mile Ring, Control and Special Interest TLD Locations

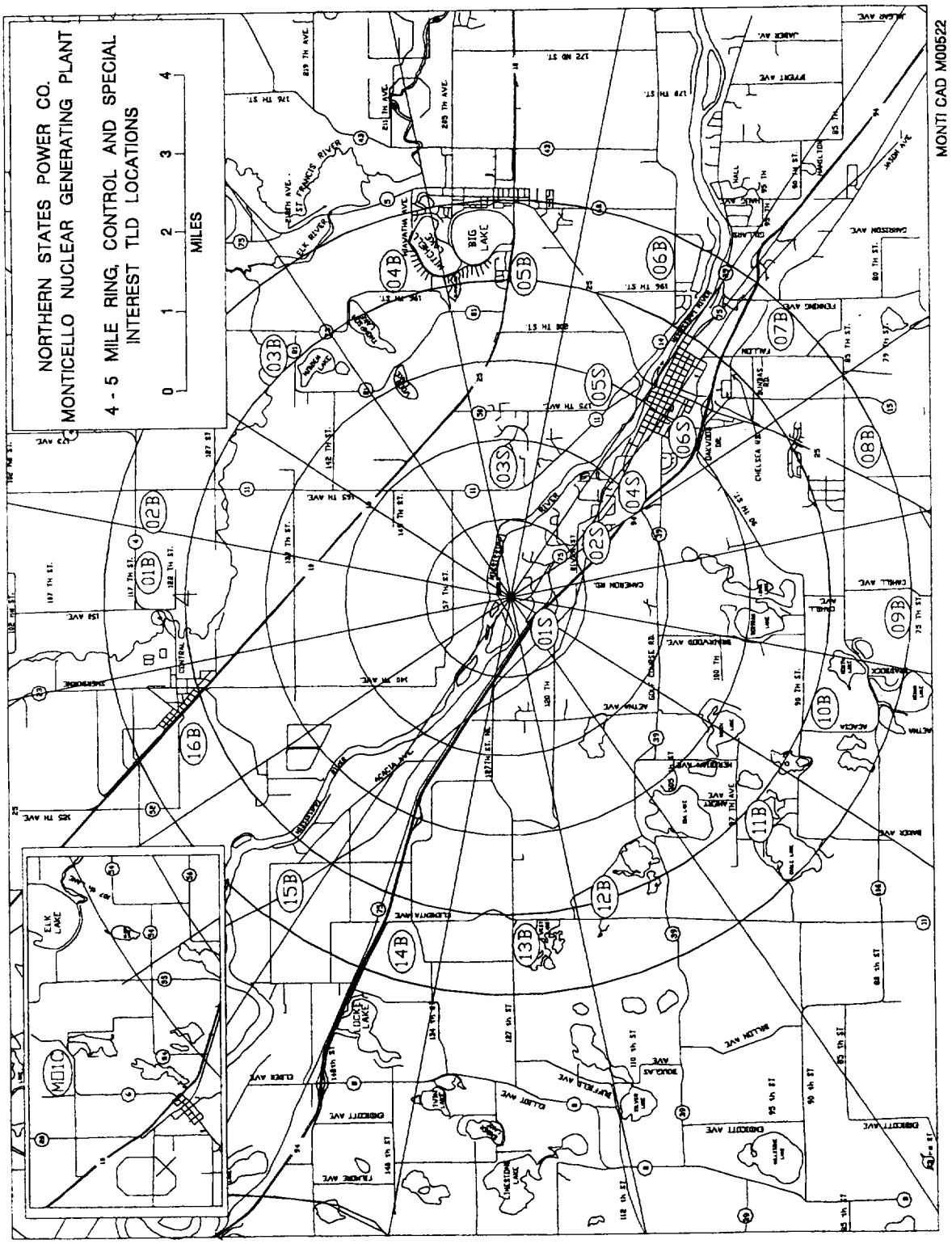

Figure 3 Site Boundary TLD Locations

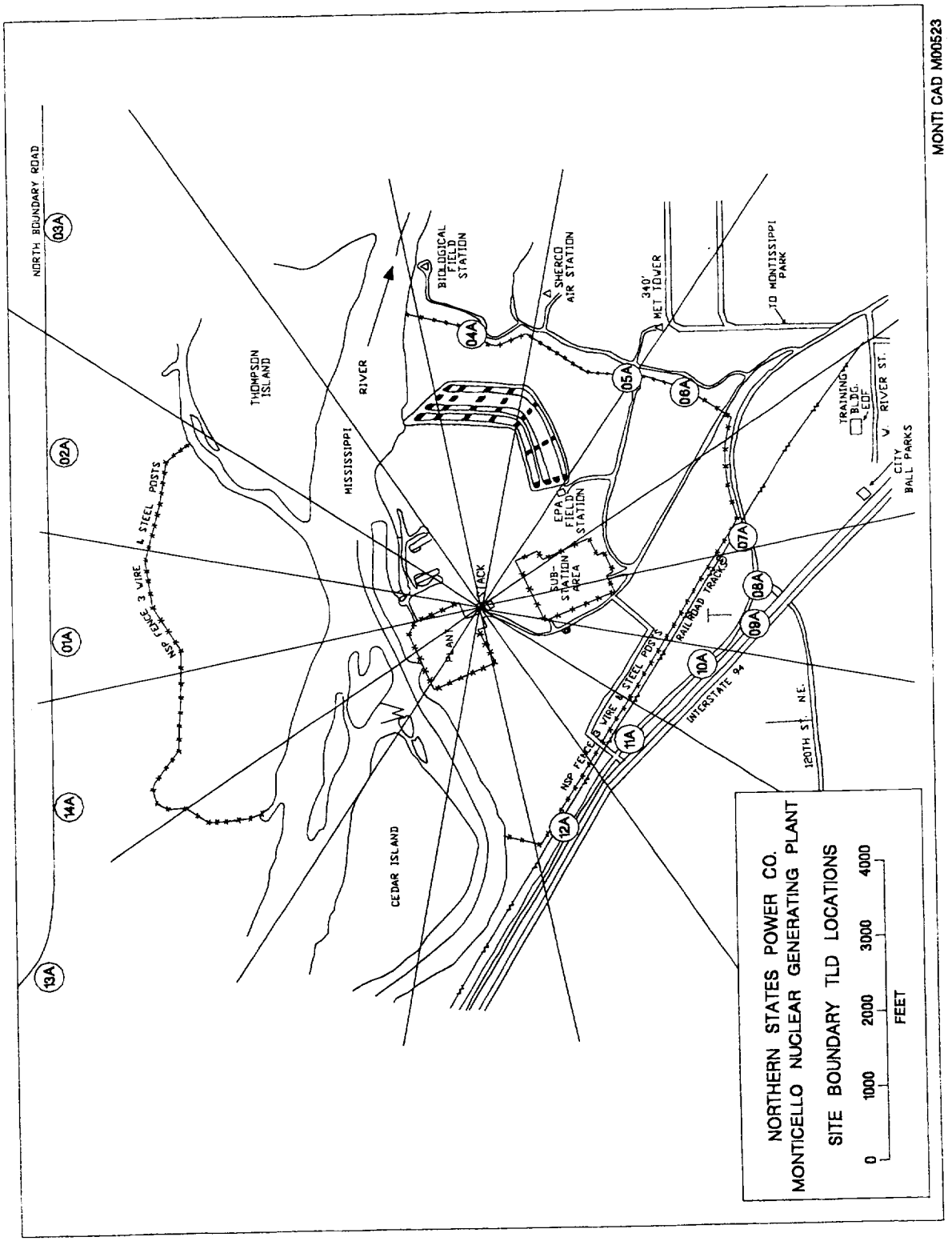

Table 1 Monticello Nuclear Generating Plant Radiological Environmental Monitoring Program
Sample Collection and Analysis

Exposure Pathway and/or Sample	Number of Samples and Sample Locations**	Sampling and Collection Frequency	Type and Frequency of Analysis
1. Airborne Radioiodine & Particulates	Samples from 5 locations: 3 samples from offsite locations (in different sectors) of the highest calculated annual average ground level D/Q, 1 sample from the vicinity of a community having the highest calculated annual average ground-level D/Q, and 1 sample from a control location specified in Table 4.	Continuous Sampler operation with sample collection weekly.	Radioiodine analysis Weekly for I-131 Particulate: Gross beta activity on each filter weekly*. Analysis ***SHALL*** be performed more than 24 hours following filter change. Perform gamma isotopic analysis on composite (by location) sample quarterly.
2. Direct Radiation	40 TLD stations established with duplicate dosimeters placed at the following locations:****	Quarterly	Gamma Dose quarterly

* If gross beta activity in any indication sample exceeds 10 times the yearly average of the control sample, a gamma isotopic analysis is required.

** Sample locations are further described in Table 4.

**** Three control TLD locations have only one dosimeter.

Table 1 Monticello Nuclear Generating Plant Radiological Environmental Monitoring Program
Sample Collection and Analysis (cont'd)

Exposure Pathway and/or Sample	Number of Samples and Sample Locations**	Sampling and Collection Frequency	Type and Frequency of Analysis
2. Direct Radiation (cont'd)	1. Using the 16 meterological wind sectors as guidelines, an inner ring of stations in the general area of the site boundary is established and an outer ring of stations at 4 to 5 mile distance from the plant site is established. Because of inaccessibility, two sectors in the inner ring are not covered. 2. Ten dosimeters are established at special interest areas and four control stations.		
3. Waterborne a. Surface	Upstream & downstream locations.	Monthly composite of weekly samples (water & ice conditions permitting)	Gamma Isotopic analysis of each monthly composite Tritium analysis of quarterly composites of monthly composites

** Sample locations are further described in Table 4.

Table 1 Monticello Nuclear Generating Plant Radiological Environmental Monitoring Program
Sample Collection and Analysis (cont'd)

Exposure Pathway and/or Sample	Number of Samples and Sample Locations**	Sampling and Collection Frequency	Type and Frequency of Analysis
3. Waterborne (cont'd)			
b. Ground	Three samples from wells within 5 miles of the plant site and one sample from a well greater than 10 miles from the plant site.	Quarterly	Gamma Isotopic and tritium analyses of each sample
c. Drinking	One sample from the City of Minneapolis water supply.	Monthly composite of weekly samples	I-131 Analysis and Gross beta and Gamma isotopic analysis of each monthly composite Tritium analysis of quarterly composites of monthly composites
d. Sediment from Shoreline	One sample upstream of plant, one sample downstream of plant, and one sample from shoreline of recreational area.	Semiannually	Gamma isotopic analysis of each sample

** Sample locations are further described in Table 4.

Table 1 Monticello Nuclear Generating Plant Radiological Environmental Monitoring Program
Sample Collection and Analysis (cont'd)

Exposure Pathway and/or Sample	Number of Samples and Sample Locations**	Sampling and Collection Frequency	Type and Frequency of Analysis
4. Ingestion			
a. Milk	One sample from dairy farm having highest D/Q, one sample from each of three dairy farms (if available) calculated to have doses from I-131 >1 mrem/yr,and one sample from 10-20 miles.	Monthly or biweekly if animals are on pasture	Gamma isotopic and I-131 analysis of each sample
b. Fish and Invertebrates	One sample of one game specie of fish located upstream and downstream of the plant site. One sample of Invertebrates upstream and downstream of the plant site.	Samples collected semi-annually	Gamma isotopic analysis on each sample (edible portion only on fish).

** Sample locations are further described in Table 4.

Table 1 Monticello Nuclear Generating Plant Radiological Environmental Monitoring Program
Sample Collection and Analysis (cont'd)

Exposure Pathway and/or Sample	Number of Samples and Sample Locations**	Sampling and Collection Frequency	Type and Frequency of Analysis
4. Ingestion (cont'd)			
c. Food Products	One sample of corn and potatoes from any area that is irrigated by water in which liquid radioactive effluent has been discharged.***	At time of harvest	Gamma isotopic analysis of edible portion of each sample
	One sample of broad leaf vegetation from highest D/Q garden and one sample from 10-20 miles.	At time of harvest	I-131 analysis of edible portion of each sample

** Sample locations are further described by in Table 4.

*** As determined by methods outlined in section 2.3.

Table 2 Reporting Levels for Radioactivity Concentrations in Environmental Samples (Reporting Levels)

Analyis	Water (pCi/1)	Airborne Particulate or Gas (pCi/m^3)	Fish (pCi/kg, wet)	Milk (pCi/1)	Vegetables (pCi/kg, wet)
H-3	2×10^4 [a]				
Mn-54	1×10^3		3×10^4		
Fe-59	4×10^2		1×10^4		
Co-58	1×10^3		3×10^4		
Co-60	3×10^2		1×10^4		
Zn-65	3×10^2		2×10^4		
Zr-Nb-95	4×10^2 [b]				
I-131	2 [c]	0.9		3	1×10^2
Cs-134	30	10	1×10^3	60	1×10^3
Cs-137	50	20	2×10^3	70	2×10^3
Ba-La-140	2×10^2 [b]			3×10^2 [b]	

a - For drinking water samples
b - Total for parent and daughter
c - If no drinking water pathways exist, a value of 20 pCi/l may be used.

Table 3 Maximum Values for the Lower Limits of Detection (LLD)[a,e]

Analysis	Water (pCi/1)	Airborne Particulate or Gas (pCi/m^3)	Fish (pCi/kg, wet)	Milk (pCi/1)	Food Products (pCi/kg, wet)	Sediment (pCi/kg, dry)
gross beta	4[b]	1×10^{-2}				
^{3}H	2000(1000[b])					
^{54}Mn	15		130			
^{59}Fe	30		260			
$^{58, 60}Co$	15		130			
^{65}Zn	30		260			
$^{95}Zr\text{-}Nb$	15[c]					
^{131}I[d]	1[b]	7×10^{-2}		1	60	
$^{134, 137}Cs$	15(10[b]), 18	1×10^{-2}	130	15	60	150
$^{140}Ba\text{-}La$	15[c]			15[c]		

Table 3 Maximum Values for the Lower Limits of Detection (LLD)[a,e] (cont'd)

TABLE NOTATION

a - The LLD is the smallest concentration of radioactive material in a sample that will be detected with 95% probability with 5% probability of falsely concluding that a blank observation represents a "real" signal.

For a particular measurement system (which may include radiochemical separation):

$$LLD = \frac{4.66\, s_b}{E \cdot V \cdot 2.22 \cdot Y \cdot \exp(-\lambda \Delta t)}$$

where:

LLD is the apriori lower limit of detection as defined above (as picocurie per unit mass or volume),

s_b is the standard deviation of the background counting rate or of the counting rate of a blank sample as appropriate (as counts per minute). Typical values of E, V, Y and Δt ***SHALL*** be used in the calculations.

E is the counting efficiency (as counts per transformation)

V is the sample size (in units of mass or volume)

2.22 is the number of transformations per minute per picocurie

Y is the fraction radiochemical yield (when applicable)

λ is the radioactive decay constant for the particular radionuclide

Δt is the elapsed time between sample collection (or end the sample collection period) and time of counting

b - LLD for drinking water.

c - Total for parent and daughter

d - These LLDs apply only where "I-131 analysis" is specified.

e - Where "Gamma Isotopic Analysis" is specified, the LLD specifications applies to the following radionuclides: H-3, Mn-54, Fe-59, Co-58, Co-60, Zn-65, Zr-Nb-95, Cs-134, Cs-137 and Ba-La-140. Other peaks which are measurable and identifiable, together with the above nuclides ***SHALL*** be identified and reported.

Table 4 Monticello Nuclear Generating Plant Radiological Environmental Monitoring Program Sampling Locations

			Location		
Type of Sample	Code	Collection Site	Distance Miles	Compass Heading	Sector
River water	M-8c	Upstream of plant	w/in 1000 ft upstream of plant intake		
River water	M-9	Downstream of plant	w/in 1000 ft downstream of plant discharge		
Drinking water	M-14	City of Minneapolis	37.0	132	SE
Well water	M-10c	Goenner Farm	12.4	322	NW
Well water	M-11	City of Monticello	3.4	126	SE
Well water	M-12	Plant Well No. 11	0.2	232	SW
Well water	M-27	Wise Residence	0.6	198	SSW
Sediment-River	M-8c	Upstream of plant	w/in 1000 ft upstream of plant intake		
Sediment-River	M-9	Downstream of plant	w/in 1000 ft downstream of plant discharge		
Sediment-Shoreline	M-15	Montissippi Park	1.4	114	ESE
Periphyton or Macroinvertebrates	M-8c	Upstream of plant	w/in 1000 ft upstream of plant intake		
	M-9	Downstream of plant	w/in 1000 ft downstream of plant discharge		
Fish	M-8c	Upstream of plant	w/in 1000 ft upstream of plant intake		
Fish	M-9	Downstream of plant	w/in 1000 ft downstream of plant discharge		
Milk	M-10c	Goenner Farm	12.4	322	NW
Milk	M-24	Weinand Farm	4.8	178	S
Milk	M-28	Hoglund Farm	3.6	300	WNW

Table 4 Monticello Nuclear Generating Plant Radiological Environmental Monitoring Program Sampling Locations (cont'd)

Type of Sample	Code	Collection Site	Location: Distance Miles	Location: Compass Heading	Location: Sector
Cultivated crops					
(leafy green vegetables)					
	a.	a. Available Producer	>10.0	a.	a.
	M-27	Highest D/Q Garden	0.6	198	SSW
(corn)*					
(potatoes)*					
Particulates and Radio-iodine					
(air)	M-1c	Air Station M-1	11.0	307	NW
(air)	M-2	Air Station M-2	0.9	137	SE
(air)	M-3	Air Station M-3	0.7	104	ESE
(air)	M-4	Air Station M-4	0.9	146	SSE
(air)	M-5	Air Station M-5	2.7	134	SE
Direct Radiation - (general area of the site boundary)					
(TLD)	M01A	Sherburne Ave. So.	0.7	1	N
(TLD)	M02A	Sherburne Ave. So.	0.8	31	NNE
(TLD)	M03A	Sherburne Ave. So.	1.3	55	NE
(TLD)	M04A	Biology Station Rd.	0.6	91	E
(TLD)	M05A	Biology Station Rd.	0.6	118	ESE
(TLD)	M06A	Biology Station Rd.	0.7	130	SE
(TLD)	M07A	County Road 75	0.6	148	SSE
(TLD)	M08A	County Road 75	0.6	170	S
(TLD)	M09A	County Road 75	0.6	192	SSW
(TLD)	M10A	County Road 75	0.5	218	SW
(TLD)	M11A	County Road 75	0.4	240	WSW
(TLD)	M12A	County Road 75	0.4	260	W
(TLD)	M13A	North Boundary Rd.	0.8	324	NW

* Collected only if plant discharges radioactive effluent into the river, then only from river irrigated fields. (See Section 2.1)

Table 4 Monticello Nuclear Generating Plant Radiological Environmental Monitoring Program Sampling Locations (cont'd)

			Location		
Type of Sample	Code	Collection Site	Distance Miles	Compass Heading	Sector
(TLD)	M14A	North Boudnary Rd.	0.7	340	NNW
Direct Radiation - (about 4 to 5 miles distant from the plant)					
(TLD)	M01B	Sherco No. 1 Air Sta.	4.6	3	N
(TLD)	M02B	County Road 11	4.4	20	NNE
(TLD)	M03B	County Rd. 73 & 81	4.3	53	NE
(TLD)	M04B	County Rd. 73 (196th Street)	4.3	68	ENE
(TLD)	M05B	City of Big Lake	4.4	90	E
(TLD)	M06B	County Rd 14 & 196th Street	4.4	117	ESE
(TLD)	M07B	Monte Industrial Dr.	4.4	136	SE
(TLD)	M08B	Residence Hwy 25 & Davidson Ave	4.7	161	SSE
(TLD)	M09B	Weinand Farm	4.8	178	S
(TLD)	M10B	Reisewitz Farm - Acacia Ave	4.2	204	SSW
(TLD)	M11B	Vanlith Farm - 97th Ave	4.0	226	SW
(TLD)	M12B	Lake Maria St. Park	4.2	254	WSW
(TLD)	M13B	Bridgewater Sta.	4.0	270	W
(TLD)	M14B	Anderson Res. - Cty Rd 111	4.3	289	WNW
(TLD)	M15B	Red Oak Wild Bird Farm	4.3	309	NW
(TLD)	M16B	Sand Plain Research Farm	4.3	341	NNW
Direct Radiation - (special interest locations)					
(TLD)	M01S	Osowski Fun Market	0.6	234	SW
(TLD)	M02S	Edgar Klucas Res.	1.1	143	SE
(TLD)	M03S	Big Oaks Park	1.6	102	ESE
(TLD)	M04S	Pinewood School	2.4	129	SE

			Location		
Type of Sample	Code	Collection Site	Distance Miles	Compass Heading	Sector
(TLD)	M05S	Rivercrest Christian Academy	3.1	118	ESE
(TLD)	M06S	Monte Public Works	2.7	134	SE
(TLD)	M01C	Kirchenbauer Farm	11.5	323	NW
(TLD)	M02C	Cty Rd 4 & 15	11.2	47	NE
(TLD)	M03C	Cty Rd 19 & Jason Ave	13.0	100	E
(TLD)	M04C	Maple Lake Water Tower	10.3	226	SW

Table 4 Monticello Nuclear Generating Plant Radiological Environmental Monitoring Program Sampling Locations (cont'd)

Notes on Table 4:

"c" denotes control locations. All other locations are indicator locations.
a. Control "leafy green" vegetable will be taken in locations as available outside 10 mi. EPZ.

The letters after TLD code numbers have the following meanings:

A Locations in the general area of the site boundary;
B Locations about 4 to 5 miles distant from the plant;
S Special interest locations.

OFFSITE DOSE CALCULATION MANUAL - TABLE OF CONTENTS

SECTION		PAGE
1.0	RECORD OF REVISION	2
2.0	REPORTING REQUIREMENTS	3
2.1	Radioactive Effluent Release Report	3
2.2	Radiological Environmental Operating Report	4
2.3	Annual Summary of Meteorological Data	6
2.4	Record Retention	7

Prepared By:	
Reviewed By:	
OC Final Review Meeting: # 2242	Date: 11/02/2000
Approved By Plant Manager:	Date:

*This is a major rewrite, therefore, no sidelines are required.

3087 (DOCUMENT CHANGE, HOLD, AND COMMENT FORM) incorporated: 00-2350			
Resp Supv: CHEM	Assoc Ref: CHEM-I	SR: N	Freq: 2 yrs
ARMS: ODCM-08.01	Doc Type: 7030	Admin Initials:	Date:

l/plr

1.0 RECORD OF REVISION

Revision No.	Date	Reason for Revision
2	October - 2000	Moved previous ODCM-08.01 contents to ODCM-APP-B, Rev 0. Changed this section name to "REPORTING REQUIREMENTS" and incorporated applicable sections of T.S. sections 6.6.A, 6.6.B, 6.7.A.4, 6.7.A.5, and 6.7.C into this document.

2.0 REPORTING REQUIREMENTS

2.1 Radioactive Effluent Release Report

In accordance with T.S. 6.7.A.4 the Radioactive Effluent Release Report covering the operation of the unit ***SHALL*** be submitted in accordance with 10CFR 50.36A.

2.1.1 The Radioactive Effluent Release Report covering the operation of the unit during the previous calendar year ***SHALL*** be submitted prior to May 15 of each calendar year.

2.1.2 The Radioactive Effluent Release Report ***SHALL*** include a summary of the quantities of radioactive liquid and gaseous effluents and solid waste released as outlined in Appendix B of Regulatory Guide 1.21, Revision 1, June, 1974, with the data summarized on a quarterly basis. In the event that some results are not available for inclusion with the report, the report ***SHALL*** be submitted noting and explaining the reasons for the missing results. The missing data ***SHALL*** be submitted as soon as possible in a supplementary report.

2.1.3 The Radioactive Effluent Release Report ***SHALL*** include an assessment of the radiation doses from radioactive effluents released from the unit during the previous calendar year. This report ***SHALL*** also include an assessment of the radiation doses from radioactive liquid and gaseous effluents to the individuals due to their activities inside the site boundary (ODCM-02.01 Figure 1 and ODCM-03.01 Figure 1) during the report period. All assumptions used in making these assessments (i.e., specific activity, exposure time and location) ***SHALL*** be included in the reports. The assessment of radiation doses ***SHALL*** be performed in accordance with the ODCM or standard NRC computer codes.

2.1.4 The Radioactive Effluent Release Report ***SHALL*** also include an assessment of radiation doses to the most likely exposed member of the public from reactor releases and other nearby uranium fuel cycle sources (including doses from primary effluent pathways and direct radiation) for the previous 12 consecutive months to show compliance with 40CFR190, Environmental Radiation Protection Standards for Nuclear Power Operation.

2.1.5 The Radioactive Effluent Release Report ***SHALL*** include the following information for solid waste shipped off-site during the report period.

A. Container volume

B. Total curie quantity (specify whether determined by measurements or estimate),

C. Principal radionuclides (specify whether determined by measurement or estimate),

D. Type of waste (e.g., spent resin, compacted dry waste),

E. Type of container (e.g., LSA, Type A, Type B, Large Quantity), and

F. Solidification agent (e.g., cement, urea formaldehyde).

2.1.6 The Radioactive Effluent Release Report ***SHALL*** include unplanned releases from the site of radioactive materials in gaseous and liquid effluents on a quarterly basis.

2.1.7 The Radioactive Effluent Release Report ***SHALL*** include a description of changes to the PCP.

2.1.8 The Radioactive Effluent Release Report ***SHALL*** contain a report of when milk or leafy green vegetable samples specified in ODCM-07.01 Table 1 cannot be obtained from the designated sample locations, and identify the new locations added to and deleted from the monitoring program.

2.1.9 The Radioactive Effluent Release Report ***SHALL*** identify Land Use Census identified locations which yield a calculated dose or dose commitment (via the same exposure pathway) 20 percent greater than at a location from which samples are currently being obtained in accordance with ODCM-07.01 Control 2.1.1.

2.2 Radiological Environmental Operating Report

In accordance with T.S.6.7.C.1, the Radiological Environmental Operating Report covering the operation of the off-site monitoring program ***SHALL*** be submitted and ***SHALL*** include:

2.2.1 The Annual Radiological Environmental Operating Report covering the operation of the site during the previous calendar year ***SHALL*** be submitted by May 15 of each year. The report ***SHALL*** include summaries, interpretations, and analyses of trends of the results of the Radiological Environmental Monitoring Program for the reporting period. The material provided ***SHALL*** be consistent with the objectives outlined in the Offsite Dose Cclculation Manual (ODCM), and in 10CFR50, Appendix I, Sections IV.B.2, IV.B.3, and IV.C.

2.2.2 The Annual Radiological Environmental Operating Report ***SHALL*** include the results of analyses of all radiological environmental samples and of all environmental radiation measurements taken during the period pursuant to the locations specified in the table and figures in the ODCM, as well as summarized and tabulated results of these analyses and measurements in the format of the table in the Radiological Assessment Branch Technical Position, Revision 1, November 1979. In the event that some individual results are not available for inclusion with the report, the report ***SHALL*** be submitted noting and explaining the reasons for the missing results. The missing data ***SHALL*** be submitted in a supplementary report as soon as possible.

2.2.3 The report ***SHALL*** also include the results of the land use census required by ODCM-07.01 Control 2.2.1. If harmful effects or evidence of irreversible damage are detected by the monitoring, the report ***SHALL*** provide an analysis of the problem and a planned course of action to alleviate the problem.

2.2.4 The Radiological Environmental Operating Report ***SHALL*** include the following: a summary description of the Radiological Environmental Monitoring Program; a map of sampling locations keyed to a table giving distances and directions from the reactor; and the results of licensee participation in the Interlaboratory Comparison Program, required by ODCM-07.01 Control 2.4.1.A.

2.2.5 The Radiological Environmental Operating Report ***SHALL*** include reasons for all deviations from the REMP sampling program as specified in ODCM-07.01 Table 1 and plans for the prevention of a recurrence, if applicable.

2.2.6 If the level of radioactivity in an environmental sampling medium at a specified location exceeds the reporting levels of ODCM-07.01 Table 2 for the sample type specified in ODCM-07.01 Table 1 and is NOT the result of plant effluents, the condition ***SHALL*** be reported in the Radiological Environmental Operating Report.

2.2.7 A summary of the Interlaboratory Comparison Program ***SHALL*** be included in the Radiological Environmental Operating Report. If the required Interlaboratory Comparison Program analyses are NOT performed, corrective action ***SHALL*** be reported in the Radiological Environmental Operating Report.

2.2.8 The Radiological Environmental Operating Report ***SHALL NOT*** include the complete analysis data tables. These tables contain the results of each sample analysis and ***SHALL*** be maintained by the licensee.

2.3 Annual Summary of Meteorological Data

The annual summary of meteorological data ***SHALL*** be submitted for the previous calendar year in the form of joint frequency tables of wind speed, wind direction, and atmospheric stability at the request of the Nuclear Regulatory Commission.

2.4 Record Retention

2.4.1 In accordance with T.S.6.6.A, the following records ***SHALL*** be retained for a minimum of five years:

A. Periodic checks, inspections, tests and calibrations of components and systems as related to the specifications and treatment systems defined in the ODCM.

B. Records of wind speed and direction.

C. Records of reviews performed for changes made to the Offsite Dose Calculation Manual.

2.4.2 In accordance with T.S.6.6.B, the following records ***SHALL*** be retained for the life of the plant:

A. Liquid and gaseous radioactive releases to the environs.

B. Off-site environmental surveys

C. Radioactive shipments

OFFSITE DOSE CALCULATION MANUAL - TABLE OF CONTENTS

SECTION		PAGE
1.0	RECORD OF REVISION	2
2.0	SUMMARY OF DISPERSION CALCULATION PROCEDURES	3
2.1	References	4
Table 1	Monticello Release Conditions	5
Table 2	Distances to Controlling Unrestricted Area Boundary Locations	6
Table 3	Monticello Reactor Vent Dispersion Parameters for Long Term Mixed Mode Releases >500 Hrs /Yr or >150 Hrs / Qtr	7
Table 4	Monticello Reactor Vent Dispersion Parameters for Long Term Mixed Mode Releases >500 Hrs/Yr or >150 Hrs/Qtr	8
Table 5	Monticello Reactor Vent Dispersion Parameters for Long Term Mixed Mode Releases >500 Hrs/Yr or >150 Hrs/Qtr	16
Table 6	Monticello Offgas Stack Dispersion Parameters for Long Term Elevated Releases >500 Hrs/Yr or >150 Hrs/Qtr	24
Table 7	Monticello Offgas Stack Dispersion Parameters for Long Term Elevated Releases >500 Hrs/Yr or >150 Hrs/Qtr	25
Table 8	Monticello Offgas Stack Dispersion Parameters for Long Term Elevated Releases >500 Hrs/Yr or >150 Hrs/Qtr	33
Table 9	Monticello Offgas Stack Dispersion Parameters for Short Term Elevated Releases ≤500 Hrs/Yr or ≤150 Hrs/Qtr	41
Table 10	Monticello Offgas Stack Dispersion Parameters for Short Term Elevated Releases ≤500 Hrs/Yr or ≤150 Hrs/Qtr	42
Table 11	Monticello Offgas Stack Dispersion Parameters for Short Term Elevated Releases ≤500 HrsYr or ≤150 Hrs/Qtr	50
Table 12	Monticello Reactor Building Vent Dispersion Parameters for Short Term Elevated Releases ≤500 Hrs/Yr or ≤150 Hrs/Qtr	58
Table 13	Reactor Building Vent Dispersion Parameters for Short Term Elevated Releases ≤500 Hrs/Yr or ≤150 Hrs/Qtr	59
Table 14	Reactor Building Vent Dispersion Parameters for Short Term Elevated Releases ≤500 Hrs/Yr or ≤150 Hrs/Qtr	67

Prepared By:	
Reviewed By:	
OC Final Review Meeting: # 2242	Date: 11/02/2000
Approved By Plant Manager:	Date:

3087 (DOCUMENT CHANGE, HOLD, AND COMMENT FORM) incorporated:			
Resp Supv: CHEM	Assoc Ref: CHEM-I	SR: N	Freq: 2 yrs
ARMS: ODCM-APP-A	Doc Type: 7030	Admin Initials:	Date:

l/plr

1.0 RECORD OF REVISION

Revision No.	Date	Reason for Revision
0	October - 2000	Moved previous ODCM-06.01 tables into this Appendix to make the ODCM easier to use.

2.0 SUMMARY OF DISPERSION CALCULATION PROCEDURES

Updepleted, undecayed dispersion parameters were computed using the computer program XOQDOQ (Sagendorf and Goll, 1977). Specifically, sector average χ/Q and D/Q values were obtained for a sector width of 22.5 degrees. Credit was taken for momentum plume rise and effective plume height was adjusted for local terrain height for elevated releases. Building wake corrections were used to adjust calculations for ground-level releases. Standard open terrain recirculation correction factors were also applied as available as default values in XOQDOQ.

Dispersion calculations were based on mixed mode releases for the reactor vent and on elevated releases for the offgas stack. A summary of release conditions used as input to XOQDOQ is presented in Table 1 and controlling site boundary distances are defined in Table 2. Computed χ/Q and D/Q values for unrestricted area boundary locations (relative to release points) and for standard distances (to five miles from the source in 0.1 mile increments) are presented in Tables 3 through 11.

For certain meteorological and release conditions, the enveloping interpolation routines in XOQDOQ used to compute short-term χ/Q and D/Q values do not provide reasonable results. Because of this, results were reviewed for consistency and where possible, the distributions of calculated χ/Q values were enveloped and interpolated by hand.

In some cases, use of the NRC methodology is implemented in XOQDOQ for estimating short term dispersion values results in values which are lower than the annual values. For these cases, the annual average χ/Q and D/Q values are used to conservatively represent short-term values. χ/Q and D/Q values for on-site EPA locations were adjusted (multiplied by a factor of 0.238) to account for limited daily exposure of workers in accordance with NUREG-0473[2].

On-site meteorological data for the period September 1, 1976 through August 31,1978 (as presented in Appendix B) were used as input to XOQDOQ. Data were collected and ΔT stability classes were defined in conformance with NRC Regulatory Guide 1.23[3]. Dispersion calculations for the reactor vent were based on $\Delta T_{42.7\text{-}10m}$ and 10 meter wind data (joint data recovery of 94 percent). Dispersion calculations for the offgas stack were based on $\Delta T_{100\text{-}10m}$ and 100 meter wind data (joint data recovery of 95 percent).

2.1 References

1. Sagendorf, J. F. and Goll, J. T., XOQDOQ Program for the Evaluation of Routine Effluent Releases at Nuclear Power Stations. NUREG 0324, U.S. Nuclear Regulatory Commission, September 1977.

2. NUREG-0473

3. USNRC Regulatory Guide 1.23

Table 1 Monticello Release Conditions

	Reactor Vent	Off-Gas Stack
Release Type	Mixed mode (Long and short-term)	Elevated (Long and short-term)
Release point height, m	42	100
Adjacent building height, m	42	42
Relative location to adjacent structures	Adjacent to Turbine Building	400′ SE of Reactor Building
Exit velocity, m/Sec	6.1	19.0
Internal stack diameter, m	2.41	0.36
Building cross-sectional area*, m^2	1480	N/A
Purge frequency**, times per year	6	6
Purge duration**, hours/release	24	24

* Applied to ground level releases.

** Applied to short-term calculations only.

Table 2 Distances to Controlling Unrestricted Area Boundary Locations

Miles

Column 1 As measured from Reactor Vent		Column 2* As Measured from Offgas Stack	
Sector	Distance	Sector	Distance
N	0.51	N	0.59
NNE	0.58	N	0.63
NE	0.65	NNE	0.65
ENE	0.83	ENE	0.78
E	0.59	E	0.50
ESE	0.59	E	0.50
SE	0.61	SSE	0.51
SSE	0.43	S	0.36
S	0.34	SSW	0.31
SSW	0.32	SW	0.33
SW	0.32	SW	0.33
WSW	0.35	WSW	0.38
W	0.48	W	0.56
WNW	0.68	NW	0.78
NW	0.43	NW	0.53
NNW	0.53	NNW	0.61

* Locations specified in Column 2 are the same geographic points as specified in Column 1 although the reference points are different.

Table 3 Monticello Reactor Vent Dispersion Parameters for Long Term Mixed Mode Releases >500 Hrs /Yr or >150 Hrs / Qtr

Site Boundary Sector*	χ/Q (sec/m^3)	D/Q (m^{-2})
N	2.09E-06	2.89E-08
NNE	1.29E-06	1.82E-08
NE	7.76E-07	9.42E-09
ENE	6.11E-07	5.62E-09
E	1.38E-06	1.45E-08
ESE	2.42E-06	3.15E-08
SE	2.53E-06	3.30E-08
SSE	4.08E-06	5.95E-08
S	2.30E-06	3.08E-08
SSW	1.80E-06	2.13E-08
SW	1.96E-06	2.54E-08
WSW	1.54E-06	1.72E-08
W	1.10E-06	1.23E-08
WNW	1.22E-06	1.19E-08
NW	2.11E-06	2.61E-08
NNW	1.87E-06	2.55E-08

Period of record: 9-1-76 to 8-31-78

* Measured relevant to the Reactor Vent.

Table 4 Monticello Reactor Vent Dispersion Parameters for Long Term Mixed Mode Releases >500 Hrs/Yr or >150 Hrs/Qtr

For Standard Distances (As Measured from the Reactor Vent) (χ/Q), sec/m^3

Miles

Sector*	0.1	0.2	0.3	0.4	0.5	0.6	0.7
N	2.94E-05	8.91E-06	4.59E-06	2.98E-06	2.17E-06	1.74E-06	1.46E-06
NNE	1.98E-05	6.24E-06	3.25E-06	2.11E-06	1.55E-06	1.25E-06	1.06E-06
NE	1.22E-05	3.84E-06	2.02E-06	1.33E-06	9.98E-07	8.21E-07	7.09E-07
ENE	1.25E-05	3.91E-06	2.05E-06	1.35E-06	1.01E-06	8.46E-07	7.44E-07
E	1.97E-05	6.02E-06	3.20E-06	2.16E-06	1.64E-06	1.36E-06	1.19E-06
ESE	3.48E-05	1.05E-05	5.71E-06	3.89E-06	2.94E-06	2.40E-06	2.04E-06
SE	3.91E-05	1.17E-05	6.34E-06	4.28E-06	3.20E-06	2.57E-06	2.15E-06
SSE	4.15E-05	1.26E-05	6.78E-06	4.52E-06	3.35E-06	2.70E-06	2.28E-06
S	1.60E-05	4.95E-06	2.69E-06	1.82E-06	1.39E-06	1.16E-06	1.02E-06
SSW	1.14E-05	3.54E-06	1.97E-06	1.39E-06	1.11E-06	9.79E-07	8.94E-07
SW	1.28E-05	3.85E-06	2.15E-06	1.51E-06	1.21E-06	1.06E-06	9.58E-07
WSW	1.08E-05	3.29E-06	1.85E-06	1.32E-06	1.06E-06	9.52E-07	8.89E-07
W	1.21E-05	3.73E-06	2.01E-06	1.37E-06	1.07E-06	9.24E-07	8.42E-07
WNW	1.96E-05	6.01E-06	3.24E-06	2.17E-06	1.64E-06	1.37E-06	1.19E-06
NW	2.15E-05	6.49E-06	3.45E-06	2.32E-06	1.76E-06	1.45E-06	1.25E-06
NNW	2.71E-05	8.24E-06	4.24E-06	2.74E-06	2.00E-06	1.61E-06	1.36E-06

Period of Record: 9-1-76 to 8-31-78

* Measured relevant to the Reactor Vent.

Table 4 Monticello Reactor Vent Dispersion Parameters for Long Term Mixed Mode Releases >500 Hrs/Yr or >150 Hrs/Qtr (cont'd)

For Standard Distances (As Measured from the Reactor Vent) (χ/Q), sec/m^3

Miles

Sector*	0.8	0.9	1.0	1.1	1.2	1.3	1.4
N	1.21E-06	9.77E-07	8.18E-07	7.00E-07	6.10E-07	5.39E-07	4.82E-07
NNE	8.85E-07	7.19E-07	6.07E-07	5.24E-07	4.59E-07	4.08E-07	3.66E-07
NE	6.02E-07	4.94E-07	4.19E-07	3.61E-07	3.16E-07	2.80E-07	2.50E-07
ENE	6.46E-07	5.41E-07	4.69E-07	4.13E-07	3.69E-07	3.32E-07	3.02E-07
E	1.02E-06	8.42E-07	7.16E-07	6.20E-07	5.45E-07	4.85E-07	4.35E-07
ESE	1.69E-06	1.35E-06	1.11E-06	9.35E-07	7.99E-07	6.92E-07	6.06E-07
SE	1.76E-06	1.39E-06	1.13E-06	9.46E-07	8.03E-07	6.93E-07	6.04E-07
SSE	1.89E-06	1.51E-06	1.25E-06	1.06E-06	9.14E-07	7.98E-07	7.06E-07
S	8.69E-07	7.17E-07	6.09E-07	5.27E-07	4.63E-07	4.12E-07	3.71E-07
SSW	7.94E-07	6.74E-07	5.85E-07	5.14E-07	4.57E-07	4.10E-07	3.70E-07
SW	8.43E-07	7.09E-07	6.09E-07	5.31E-07	4.68E-07	4.16E-07	3.73E-07
WSW	8.07E-07	6.97E-07	6.12E-07	5.44E-07	4.87E-07	4.39E-07	3.99E-07
W	7.50E-07	6.40E-07	5.59E-07	4.95E-07	4.42E-07	3.99E-07	3.63E-07
WNW	1.02E-06	8.42E-07	7.17E-07	6.22E-07	5.47E-07	4.87E-07	4.38E-07
NW	1.05E-06	8.55E-07	7.15E-07	6.10E-07	5.29E-07	4.64E-07	4.11E-07
NNW	1.13E-06	9.14E-07	7.68E-07	6.60E-07	5.76E-07	5.10E-07	4.57E-07

Period of Record: 9-1-76 to 8-31-78

* Measured relevant to the Reactor Vent.

Table 4 Monticello Reactor Vent Dispersion Parameters for Long Term Mixed Mode Releases >500 Hrs/Yr or >150 Hrs/Qtr (cont'd)

For Standard Distances (As Measured from the Reactor Vent) (χ/Q), sec/m^3

Miles

Sector*	1.5	1.6	1.7	1.8	1.9	2.0	2.1
N	4.35E-07	3.91E-07	3.54E-07	3.23E-07	2.96E-07	2.72E-07	2.52E-07
NNE	3.32E-07	3.00E-07	2.72E-07	2.49E-07	2.28E-07	2.11E-07	1.95E-07
NE	2.25E-07	2.07E-07	1.92E-07	1.78E-07	1.67E-07	1.57E-07	1.48E-07
ENE	2.77E-07	2.56E-07	2.37E-07	2.21E-07	2.07E-07	1.94E-07	1.83E-07
E	3.94E-07	3.57E-07	3.25E-07	2.97E-07	2.73E-07	2.53E-07	2.34E-07
ESE	5.36E-07	4.78E-07	4.29E-07	3.88E-07	3.53E-07	3.23E-07	2.97E-07
SE	5.33E-07	4.80E-07	4.35E-07	3.97E-07	3.65E-07	3.37E-07	3.12E-07
SSE	6.31E-07	5.63E-07	5.05E-07	4.57E-07	4.16E-07	3.80E-07	3.49E-07
S	3.36E-07	3.03E-07	2.74E-07	2.49E-07	2.28E-07	2.10E-07	1.94E-07
SSW	3.37E-07	3.20E-07	3.05E-07	2.92E-07	2.81E-07	2.71E-07	2.62E-07
SW	3.37E-07	3.17E-07	2.99E-07	2.83E-07	2.70E-07	2.58E-07	2.47E-07
WSW	3.64E-07	3.44E-07	3.26E-07	3.10E-07	2.95E-07	2.82E-07	2.71E-07
W	3.32E-07	3.16E-07	3.01E-07	2.89E-07	2.78E-07	2.69E-07	2.61E-07
WNW	3.97E-07	3.74E-07	3.54E-07	3.37E-07	3.23E-07	3.12E-07	3.02E-07
NW	3.68E-07	3.33E-07	3.03E-07	2.78E-07	2.57E-07	2.38E-07	2.21E-07
NNW	4.13E-07	3.73E-07	3.39E-07	3.10E-07	2.85E-07	2.63E-07	2.44E-07

Period of Record: 9-1-76 to 8-31-78

* Measured relevant to the Reactor Vent.

Table 4 Monticello Reactor Vent Dispersion Parameters for Long Term Mixed Mode Releases >500 Hrs/Yr or >150 Hrs/Qtr (cont'd)

For Standard Distances (As Measured from the Reactor Vent) (χ/Q), sec/m^3

Miles

Sector*	2.2	2.3	2.4	2.5	2.6	2.7	2.8
N	2.34E-07	2.18E-07	2.04E-07	1.92E-07	1.83E-07	1.75E-07	1.68E-07
NNE	1.82E-07	1.70E-07	1.59E-07	1.50E-07	1.41E-07	1.33E-07	1.26E-07
NE	1.40E-07	1.32E-07	1.26E-07	1.20E-07	1.13E-07	1.07E-07	1.02E-07
ENE	1.73E-07	1.64E-07	1.56E-07	1.49E-07	1.41E-07	1.34E-07	1.27E-07
E	2.18E-07	2.04E-07	1.91E-07	1.80E-07	1.69E-07	1.60E-07	1.51E-07
ESE	2.74E-07	2.53E-07	2.36E-07	2.20E-07	2.05E-07	1.93E-07	1.81E-07
SE	2.91E-07	2.73E-07	2.56E-07	2.41E-07	2.26E-07	2.12E-07	1.99E-07
SSE	2.22E-07	2.99E-07	2.78E-07	2.59E-07	2.43E-07	2.29E-07	2.15E-07
S	1.80E-07	1.68E-07	1.57E-07	1.47E-07	1.42E-07	1.37E-07	1.33E-07
SSW	2.55E-07	2.48E-07	2.41E-07	2.35E-07	2.20E-07	2.06E-07	1.94E-07
SW	2.38E-07	2.30E-07	2.22E-07	2.15E-07	2.04E-07	1.93E-07	1.83E-07
WSW	2.60E-07	2.51E-07	2.42E-07	2.34E-07	2.18E-07	2.04E-07	1.92E-07
W	2.54E-07	2.48E-07	2.42E-07	2.37E-07	2.25E-07	2.14E-07	2.04E-07
WNW	2.93E-07	2.85E-07	2.79E-07	2.73E-07	2.64E-07	2.55E-07	2.47E-07
NW	2.07E-07	1.94E-07	1.82E-07	1.72E-07	1.66E-07	1.60E-07	1.55E-07
NNW	2.28E-07	2.13E-07	2.00E-07	1.88E-07	1.78E-07	1.68E-07	1.60E-07

Period of Record: 9-1-76 to 8-31-78

* Measured relevant to the Reactor Vent.

Table 4 Monticello Reactor Vent Dispersion Parameters for Long Term Mixed Mode Releases >500 Hrs/Yr or >150 Hrs/Qtr (cont'd)

For Standard Distances (As Measured from the Reactor Vent) (χ/Q), sec/m^3

Miles

Sector*	2.9	3.0	3.1	3.2	3.3	3.4	3.5
N	1.62E-07	1.56E-07	1.51E-07	1.46E-07	1.41E-07	1.37E-07	1.33E-07
NNE	1.20E-07	1.14E-07	1.09E-07	1.04E-07	9.91E-08	9.49E-08	9.10E-08
NE	9.64E-08	9.16E-08	8.73E-08	8.33E-07	7.96E-08	7.62E-08	7.30E-08
ENE	1.21E-07	1.16E-07	1.11E-07	1.06E-07	1.02E-07	9.75E-08	9.37E-08
E	1.44E-07	1.36E-07	1.30E-07	1.24E-07	1.18E-07	1.13E-07	1.09E-07
ESE	1.71E-07	1.61E-07	1.53E-07	1.45E-07	1.38E-07	1.31E-07	1.25E-07
SE	1.88E-07	1.77E-07	1.68E-07	1.59E-07	1.51E-07	1.44E-07	1.37E-07
SSE	2.04E-07	1.93E-07	1.83E-07	1.74E-07	1.66E-07	1.58E-07	1.51E-07
S	1.29E-07	1.26E-07	1.22E-07	1.19E-07	1.17E-07	1.14E-07	1.12E-07
SSW	1.83E-07	1.73E-07	1.63E-07	1.55E-07	1.47E-07	1.40E-07	1.33E-07
SW	1.75E-07	1.67E-07	1.59E-07	1.52E-07	1.46E-07	1.40E-07	1.34E-07
WSW	1.80E-07	1.70E-07	1.60E-07	1.52E-07	1.44E-07	1.37E-07	1.30E-07
W	1.95E-07	1.87E-07	1.79E-07	1.72E-07	1.65E-07	1.59E-07	1.53E-07
WNW	2.40E-07	2.33E-07	2.26E-07	2.19E-07	2.13E-07	2.07E-07	2.01E-07
NW	1.50E-07	1.46E-07	1.42E-07	1.39E-07	1.36E-07	1.33E-07	1.31E-07
NNW	1.52E-07	1.45E-07	1.38E-07	1.32E-07	1.26E-07	1.21E-07	1.17E-07

Period of Record: 9-1-76 to 8-31-78

* Measured relevant to the Reactor Vent.

Table 4 Monticello Reactor Vent Dispersion Parameters for Long Term Mixed Mode Releases >500 Hrs/Yr or >150 Hrs/Qtr (cont'd)

For Standard Distances (As Measured from the Reactor Vent) (χ/Q), sec/m³

Miles

Sector*	3.6	3.7	3.8	3.9	4.0	4.1	4.2
N	1.28E-07	1.23E-07	1.18E-07	1.14E-07	1.10E-07	1.06E-07	1.02E-07
NNE	8.74E-08	8.40E-08	8.09E-08	7.80E-08	7.52E-08	7.26E-08	7.02E-08
NE	7.01E-08	6.74E-08	6.48E-08	6.24E-08	6.02E-08	5.81E-08	5.61E-08
ENE	9.02E-08	8.69E-08	8.38E-08	8.10E-08	7.82E-08	7.57E-08	7.33E-08
E	1.04E-07	1.00E-07	9.62E-08	9.26E-08	8.92E-08	8.61E-08	8.31E-08
ESE	1.19E-07	1.14E-07	1.09E-07	1.05E-07	1.01E-07	9.66E-07	9.29E-08
SE	1.31E-07	1.25E-07	1.20E-07	1.15E-07	1.10E-07	1.06E-07	1.02E-07
SSE	1.45E-07	1.40E-07	1.36E-07	1.31E-07	1.27E-07	1.23E-07	1.19E-07
S	1.08E-07	1.05E-07	1.02E-07	9.95E-08	9.69E-08	9.44E-08	9.20E-08
SSW	1.29E-07	1.25E-07	1.21E-07	1.17E-07	1.13E-07	1.10E-07	1.07E-07
SW	1.31E-07	1.27E-07	1.24E-07	1.20E-07	1.17E-07	1.14E-07	1.11E-07
WSW	1.27E-07	1.23E-07	1.20E-07	1.17E-07	1.14E-07	1.11E-07	1.09E-07
W	1.46E-07	1.39E-07	1.33E-07	1.28E-07	1.22E-07	1.17E-07	1.13E-07
WNW	1.91E-07	1.82E-07	1.74E-07	1.66E-07	1.59E-07	1.52E-07	1.46E-07
NW	1.26E-07	1.23E-07	1.19E-07	1.16E-07	1.13E-07	1.10E-07	1.07E-07
NNW	1.12E-07	1.08E-07	1.04E-07	1.01E-07	9.73E-08	9.41E-08	9.11E-08

Period of Record: 9-1-76 to 8-31-78

* Measured relevant to the Reactor Vent.

Table 4 Monticello Reactor Vent Dispersion Parameters for Long Term Mixed Mode Releases >500 Hrs/Yr or >150 Hrs/Qtr (cont'd)

For Standard Distances (As Measured from the Reactor Vent) (χ/Q), sec/m^3

Miles

Sector*	4.3	4.4	4.5	4.6	4.7	4.8	4.9
N	9.86E-08	9.54E-08	9.23E-08	8.95E-08	8.68E-08	8.42E-08	8.18E-08
NNE	6.79E-08	6.57E-08	6.37E-08	6.18E-08	6.00E-08	5.83E-08	5.66E-08
NE	5.43E-08	5.25E-08	5.09E-08	4.93E-08	4.78E-08	4.65E-08	4.51E-08
ENE	7.10E-08	6.89E-08	6.68E-08	6.49E-08	6.31E-08	6.14E-08	5.97E-08
E	8.09E-08	7.77E-08	7.53E-08	7.29E-08	7.07E-08	6.87E-08	6.67E-08
ESE	8.05E-08	8.63E-08	8.33E-08	8.04E-08	7.78E-08	7.52E-08	7.28E-08
SE	9.84E-08	9.48E-08	9.15E-08	8.84E-08	8.55E-08	8.27E-08	8.01E-08
SSE	1.16E-07	1.13E-07	1.10E-07	1.06E-07	1.03E-07	9.92E-08	9.61E-08
S	8.98E-08	8.77E-08	8.57E-08	8.28E-08	8.00E-08	7.74E-08	7.50E-08
SSW	1.04E-07	1.01E-07	9.84E-08	9.49E-08	9.16E-08	8.85E-08	8.55E-08
SW	1.08E-07	1.05E-07	1.02E-07	9.82E-08	9.46E-08	9.12E-08	8.79E-08
WSW	1.06E-07	1.03E-07	1.01E-07	9.72E-08	9.36E-08	9.03E-08	8.72E-08
W	1.08E-07	1.04E-07	1.00E-07	9.69E-08	9.36E-08	9.04E-08	8.74E-08
WNW	1.40E-07	1.35E-07	1.30E-07	1.25E-07	1.20E-07	1.16E-07	1.12E-07
NW	1.04E-07	1.02E-07	9.92E-08	9.58E-08	9.26E-08	8.95E-08	8.67E-08
NNW	8.83E-08	8.57E-08	8.32E-08	8.07E-08	7.82E-08	7.60E-08	7.38E-08

Period of Record: 9-1-76 to 8-31-78

* Measured relevant to the Reactor Vent.

Table 4 Monticello Reactor Vent Dispersion Parameters for Long Term Mixed Mode Releases >500 Hrs/Yr or >150 Hrs/Qtr (cont'd)

For Standard Distances (As Measured from the Reactor Vent) (χ/Q), sec/m^3

Sector*	Miles 5.0
N	7.94E-08
NNE	5.51E-08
NE	4.39E-08
ENE	5.82E-08
E	6.48E-08
ESE	7.06E-08
SE	7.76E-08
SSE	9.31E-08
S	7.26E-08
SSW	8.28E-08
SW	8.49E-08
WSW	8.42E-08
W	8.46E-08
WNW	1.08E-07
NW	8.40E-08
NNW	7.18E-08

Period of Record: 9-1-76 to 8-31-78

* Measured relevant to the Reactor Vent.

Table 5 Monticello Reactor Vent Dispersion Parameters for Long Term Mixed Mode Releases >500 Hrs/Yr or >150 Hrs/Qtr

For Standard Distances (As Measured from the Reactor Vent) (D/Q), /m²

Miles

Sector*	0.1	0.2	0.3	0.4	0.5	0.6	0.7
N	2.75E-07	1.10E-07	6.31E-08	4.18E-08	3.01E-08	2.28E-08	1.80E-08
NNE	1.89E-07	7.89E-08	4.70E-08	3.17E-08	2.30E-08	1.74E-08	1.37E-08
NE	1.11E-07	4.68E-08	2.81E-08	1.91E-08	1.39E-08	1.06E-08	8.41E-09
ENE	1.03E-07	4.32E-08	2.61E-08	1.78E-08	1.31E-08	1.00E-08	7.94E-09
E	1.58E-07	6.46E-08	3.08E-08	2.56E-08	1.87E-08	1.42E-08	1.13E-08
ESE	3.79E-07	1.49E-07	8.53E-08	5.66E-08	4.09E-08	3.11E-08	2.46E-08
SE	4.31E-07	1.67E-07	9.41E-08	6.19E-08	4.43E-08	3.36E-08	2.65E-08
SSE	4.49E-07	1.77E-07	1.01E-07	6.65E-08	4.78E-08	3.62E-08	2.86E-08
S	1.47E-07	6.03E-08	3.58E-08	2.43E-08	1.79E-08	1.38E-08	1.10E-08
SSW	9.22E-08	3.85E-08	2.33E-08	1.62E-08	1.21E-08	9.50E-09	7.72E-09
SW	1.21E-07	4.80E-08	2.79E-08	1.90E-08	1.41E-08	1.10E-08	8.89E-09
WSW	8.33E-08	3.44E-08	2.07E-08	1.44E-08	1.09E-08	8.57E-09	7.01E-09
W	9.09E-08	3.80E-08	2.29E-08	1.58E-08	1.18E-08	9.18E-09	7.41E-09
WNW	1.51E-07	6.14E-08	3.65E-08	2.49E-08	1.83E-08	1.41E-08	1.13E-08
NW	1.86E-07	7.43E-08	4.30E-08	2.89E-08	2.11E-08	1.62E-08	1.29E-08
NNW	2.45E-07	9.85E-08	5.73E-08	3.82E-08	2.76E-08	2.10E-08	1.66E-08

Period of Record: 9-1-76 to 8-31-78

* Measured relevant to the Reactor Vent.

Table 5 Monticello Reactor Vent Dispersion Parameters for Long Term Mixed Mode Releases >500 Hrs/Yr or >150 Hrs/Qtr (cont'd)

For Standard Distances (As Measured from the Reactor Vent) (D/Q), /m²

Miles

Sector*	0.8	0.9	1.0	1.1	1.2	1.3	1.4
N	1.38E-08	1.02E-08	7.88E-09	6.23E-09	5.03E-09	4.14E-09	3.55E-09
NNE	1.05E-08	7.83E-09	6.02E-09	4.76E-09	3.85E-09	3.17E-09	2.72E-09
NE	6.48E-09	4.84E-09	3.74E-09	2.96E-09	2.40E-09	1.98E-09	1.66E-09
ENE	6.14E-09	4.60E-09	3.56E-09	2.83E-09	2.30E-09	1.90E-09	1.60E-09
E	8.71E-09	6.51E-09	5.04E-09	4.00E-09	3.24E-09	2.68E-09	2.24E-09
ESE	1.89E-08	1.41E-09	1.09E-08	8.64E-09	7.00E-09	5.77E-09	4.83E-09
SE	2.03E-08	1.51E-08	1.17E-08	9.22E-09	7.45E-09	6.14E-09	5.13E-09
SSE	2.19E-08	1.63E-08	1.26E-08	9.93E-09	8.03E-09	6.61E-09	5.75E-09
S	8.57E-09	6.44E-09	5.01E-09	3.99E-09	3.46E-09	2.85E-09	2.38E-09
SSW	6.08E-09	4.63E-09	3.63E-09	2.92E-09	2.39E-09	2.09E-09	1.76E-09
SW	6.99E-09	5.31E-09	4.16E-09	3.34E-09	2.73E-09	2.41E-09	2.02E-09
WSW	5.56E-09	4.86E-09	3.36E-09	2.71E-09	2.23E-09	1.86E-09	1.63E-09
W	5.81E-09	4.41E-09	3.45E-09	2.77E-09	2.27E-09	1.89E-09	1.65E-09
WNW	8.82E-09	7.50E-09	5.17E-09	4.13E-09	3.76E-09	2.79E-09	2.48E-09
NW	9.99E-09	7.50E-09	5.82E-09	4.63E-09	3.76E-09	3.11E-09	2.61E-09
NNW	1.27E-08	9.47E-09	7.30E-09	5.78E-09	4.67E-09	3.85E-09	3.32E-09

Period of Record: 9-1-76 to 8-31-78

* Measured relevant to the Reactor Vent.

Table 5 Monticello Reactor Vent Dispersion Parameters for Long Term Mixed Mode Releases >500 Hrs/Yr or >150 Hrs/Qtr (cont'd)

For Standard Distances (As Measured from the Reactor Vent) (D/Q), /m²

Miles

Sector*	1.5	1.6	1.7	1.8	1.9	2.0	2.1
N	3.00E-09	2.57E-09	2.22E-09	1.93E-09	1.70E-09	1.51E-09	1.34E-09
NNE	2.30E-09	1.97E-09	1.71E-09	1.49E-09	1.31E-09	1.16E-09	1.04E-09
NE	1.41E-09	1.21E-09	1.05E-09	9.18E-10	8.12E-10	7.20E-10	6.44E-10
ENE	1.36E-09	1.17E-09	1.01E-09	8.84E-10	7.81E-10	6.94E-10	6.20E-10
E	1.91E-09	1.64E-09	1.42E-09	1.24E-09	1.09E-09	9.71E-10	8.67E-10
ESE	4.09E-09	3.51E-09	3.04E-09	2.65E-09	2.34E-09	2.07E-09	1.85E-09
SE	4.34E-09	3.72E-09	3.22E-09	2.81E-09	2.48E-09	2.19E-09	1.96E-09
SSE	4.86E-09	4.16E-09	3.59E-09	3.13E-09	2.75E-09	2.43E-09	2.17E-09
S	2.03E-09	1.74E-09	1.50E-09	1.31E-09	1.16E-09	1.02E-09	9.13E-10
SSW	1.50E-09	1.33E-09	1.15E-09	1.01E-09	9.52E-10	8.43E-10	7.52E-10
SW	1.72E-09	1.52E-09	1.32E-09	1.15E-09	1.08E-09	9.53E-10	8.49E-10
WSW	1.39E-09	1.25E-09	1.09E-09	9.54E-10	9.16E-10	8.11E-10	7.23E-10
W	1.40E-09	1.24E-09	1.08E-09	9.44E-10	8.93E-10	7.91E-10	7.05E-10
WNW	2.10E-09	1.84E-09	1.59E-09	1.39E-09	1.28E-09	1.13E-09	1.01E-09
NW	2.22E-09	1.91E-09	1.65E-09	1.45E-09	1.28E-09	1.13E-09	1.01E-09
NNW	2.81E-09	2.40E-09	2.08E-09	1.81E-09	1.59E-09	1.42E-09	1.27E-09

Period of Record: 9-1-76 to 8-31-78

* Measured relevant to the Reactor Vent.

Table 5 Monticello Reactor Vent Dispersion Parameters for Long Term Mixed Mode Releases >500 Hrs/Yr or >150 Hrs/Qtr (cont'd)

For Standard Distances (As Measured from the Reactor Vent) (D/Q), /m²

Miles

Sector*	2.2	2.3	2.4	2.5	2.6	2.7	2.8
N	1.21E-09	1.09E-09	9.85E-10	8.97E-10	8.29E-10	7.64E-10	7.05E-10
NNE	9.29E-10	8.38E-10	7.60E-10	6.92E-10	6.33E-10	5.81E-10	5.35E-10
NE	5.78E-10	5.23E-10	4.83E-10	4.40E-10	4.03E-10	3.70E-10	3.41E-10
ENE	5.70E-10	5.14E-10	4.67E-10	4.25E-10	3.89E-10	3.57E-10	3.29E-10
E	7.79E-10	7.03E-10	6.38E-10	5.82E-10	5.32E-10	4.89E-10	4.51E-10
ESE	1.66E-09	1.50E-09	1.36E-09	1.24E-09	1.13E-09	1.04E-09	9.56E-10
SE	1.81E-09	1.63E-09	1.47E-09	1.35E-09	1.23E-09	1.13E-09	1.04E-09
SSE	1.94E-09	1.75E-09	1.59E-09	1.44E-09	1.32E-09	1.21E-09	1.11E-09
S	8.91E-10	7.38E-10	6.69E-10	6.09E-10	5.59E-10	5.16E-10	4.76E-10
SSW	6.74E-10	6.08E-10	5.51E-10	5.02E-10	4.60E-10	4.22E-10	3.90E-10
SW	7.61E-10	6.86E-10	6.22E-10	5.66E-10	5.18E-10	4.75E-10	4.38E-10
WSW	6.49E-10	5.85E-10	5.30E-10	4.83E-10	4.42E-10	4.07E-10	3.75E-10
W	6.33E-10	5.71E-10	5.18E-10	4.72E-10	4.32E-10	3.98E-10	3.67E-10
WNW	9.02E-10	8.14E-10	7.38E-10	6.72E-10	6.15E-10	5.66E-10	5.22E-10
NW	9.09E-10	8.48E-10	7.69E-10	7.00E-10	6.48E-10	5.95E-10	5.52E-10
NNW	1.14E-09	1.03E-09	9.29E-10	8.46E-10	7.77E-10	7.14E-10	6.59E-10

Period of Record: 9-1-76 to 8-31-78

* Measured relevant to the Reactor Vent.

Table 5 Monticello Reactor Vent Dispersion Parameters for Long Term Mixed Mode Releases >500 Hrs/Yr or >150 Hrs/Qtr (cont'd)

For Standard Distances (As Measured from the Reactor Vent) (D/Q), /m²

Miles

Sector*	2.9	3.0	3.1	3.2	3.3	3.4	3.5
N	6.52E-10	6.09E-10	5.67E-10	5.30E-10	5.00E-10	4.71E-10	4.46E-10
NNE	4.95E-10	4.59E-10	4.26E-10	3.97E-10	3.71E-10	3.48E-10	3.27E-10
NE	3.15E-10	2.92E-10	2.72E-10	2.53E-10	2.37E-10	2.22E-10	2.08E-10
ENE	3.04E-10	2.82E-10	2.62E-10	2.44E-10	2.28E-10	2.14E-10	2.01E-10
E	4.16E-10	3.86E-10	3.59E-10	3.34E-10	3.12E-10	2.93E-10	2.75E-10
ESE	8.83E-10	8.18E-10	7.60E-10	7.08E-10	6.61E-10	6.19E-10	5.80E-10
SE	9.59E-10	8.88E-10	8.25E-10	7.68E-10	7.17E-10	6.71E-10	6.30E-10
SSE	1.03E-09	9.56E-10	8.89E-10	8.28E-10	7.73E-10	7.24E-10	6.79E-10
S	4.42E-10	4.12E-10	3.93E-10	3.68E-10	3.44E-10	3.24E-10	3.05E-10
SSW	3.61E-10	3.35E-10	3.13E-10	2.92E-10	2.74E-10	2.58E-10	2.43E-10
SW	4.05E-10	3.76E-10	3.50E-10	3.27E-10	3.06E-10	2.87E-10	2.71E-10
WSW	3.47E-10	3.23E-10	3.01E-10	2.81E-10	2.64E-10	2.48E-10	2.34E-10
W	3.40E-10	3.16E-10	2.95E-10	2.76E-10	2.60E-10	2.44E-10	2.31E-10
WNW	4.83E-10	4.49E-10	4.19E-10	3.91E-10	3.68E-10	3.90E-10	3.98E-10
NW	5.13E-10	4.78E-10	4.54E-10	4.25E-10	3.99E-10	3.75E-10	3.53E-10
NNW	6.10E-10	5.66E-10	5.27E-10	4.92E-10	4.61E-10	4.33E-10	4.08E-10

Period of Record: 9-1-76 to 8-31-78

* Measured relevant to the Reactor Vent.

Table 5 Monticello Reactor Vent Dispersion Parameters for Long Term Mixed Mode Releases >500 Hrs/Yr or >150 Hrs/Qtr (cont'd)

For Standard Distances (As Measured from the Reactor Vent) (D/Q), /m²

Miles

Sector*	3.6	3.7	3.8	3.9	4.0	4.1	4.2
N	4.22E-10	4.00E-10	3.80E-10	3.62E-10	3.45E-10	3.30E-10	3.16E-10
NNE	3.08E-10	2.90E-10	2.74E-10	2.59E-10	2.46E-10	2.34E-10	2.22E-10
NE	1.96E-10	1.87E-10	1.75E-10	1.65E-10	1.57E-10	1.49E-10	1.41E-10
ENE	1.89E-10	1.78E-10	1.68E-10	1.59E-10	1.51E-10	1.43E-10	1.36E-10
E	2.58E-10	2.43E-10	2.29E-10	2.17E-10	2.05E-10	1.95E-10	1.85E-10
ESE	5.45E-10	5.13E-10	4.84E-10	4.57E-10	4.33E-10	4.10E-10	3.89E-10
SE	5.93E-10	5.58E-10	5.27E-10	4.98E-10	4.72E-10	4.48E-10	4.26E-10
SSE	6.46E-10	6.09E-10	5.76E-10	5.55E-10	5.27E-10	5.02E-10	4.79E-10
S	2.88E-10	2.73E-10	2.59E-10	2.46E-10	2.35E-10	2.24E-10	2.14E-10
SSW	2.30E-10	2.18E-10	2.07E-10	1.97E-10	1.88E-10	1.80E-10	1.72E-10
SW	2.55E-10	2.42E-10	2.29E-10	2.18E-10	2.28E-10	2.33E-10	2.22E-10
WSW	2.21E-10	2.10E-10	1.99E-10	1.90E-10	1.81E-10	1.73E-10	1.66E-10
W	2.19E-10	2.08E-10	1.98E-10	1.88E-10	1.80E-10	1.72E-10	1.65E-10
WNW	3.75E-10	3.55E-10	3.36E-10	3.19E-10	3.04E-10	2.89E-10	2.76E-10
NW	3.34E-10	3.17E-10	3.01E-10	2.86E-10	2.73E-10	2.61E-10	2.50E-10
NNW	3.85E-10	3.64E-10	3.45E-10	3.28E-10	3.12E-10	3.04E-10	2.90E-10

Period of Record: 9-1-76 to 8-31-78

* Measured relevant to the Reactor Vent.

Table 5 Monticello Reactor Vent Dispersion Parameters for Long Term Mixed Mode Releases >500 Hrs/Yr or >150 Hrs/Qtr (cont'd)

For Standard Distances (As Measured from the Reactor Vent) (D/Q), /m²

Miles

Sector*	4.3	4.4	4.5	4.6	4.7	4.8	4.9
N	3.03E-10	2.91E-10	2.80E-10	2.70E-10	2.61E-10	2.52E-10	2.44E-10
NNE	2.12E-10	2.02E-10	1.93E-10	1.84E-10	1.76E-10	1.69E-10	1.62E-10
NE	1.35E-10	1.28E-10	1.23E-10	1.17E-10	1.12E-10	1.07E-10	1.03E-10
ENE	1.29E-10	1.23E-10	1.18E-10	1.12E-10	1.08E-10	1.03E-10	9.88E-11
E	1.76E-10	1.67E-10	1.59E-10	1.52E-10	1.45E-10	1.39E-10	1.33E-10
ESE	3.70E-10	3.52E-10	3.35E-10	3.20E-10	3.05E-10	2.92E-10	2.79E-10
SE	4.05E-10	3.87E-10	3.69E-10	3.53E-10	3.38E-10	3.24E-10	3.11E-10
SSE	4.61E-10	4.41E-10	4.26E-10	4.09E-10	3.94E-10	3.80E-10	3.66E-10
S	2.05E-10	1.97E-10	1.90E-10	1.83E-10	1.76E-10	1.70E-10	1.65E-10
SSW	1.65E-10	1.59E-10	1.53E-10	1.48E-10	1.43E-10	1.38E-10	1.34E-10
SW	2.42E-10	2.42E-10	2.41E-10	2.30E-10	2.20E-10	2.10E-10	2.01E-10
WSW	1.59E-10	1.53E-10	1.58E-10	1.52E-10	1.47E-10	1.42E-10	1.37E-10
W	1.59E-10	1.53E-10	1.48E-10	1.43E-10	1.38E-10	1.34E-10	1.30E-10
WNW	2.64E-10	2.53E-10	2.42E-10	2.33E-10	2.24E-10	2.16E-10	2.08E-10
NW	2.39E-10	2.30E-10	2.22E-10	2.14E-10	2.07E-10	2.00E-10	1.93E-10
NNW	2.78E-10	2.67E-10	2.57E-10	2.47E-10	2.38E-10	2.30E-10	2.22E-10

Period of Record: 9-1-76 to 8-31-78

* Measured relevant to the Reactor Vent.

Table 5 Monticello Reactor Vent Dispersion Parameters for Long Term Mixed Mode Releases >500 Hrs/Yr or >150 Hrs/Qtr (cont'd)

For Standard Distances (As Measured from the Reactor Vent) (D/Q), /m²

Miles

Sector*	5.0
N	2.36E-10
NNE	1.56E-10
NE	9.90E-11
ENE	9.49E-11
E	1.27E-10
ESE	2.68E-10
SE	2.99E-10
SSE	3.54E-10
S	1.60E-10
SSW	1.30E-10
SW	1.93E-10
WSW	1.33E-10
W	1.27E-10
WNW	2.01E-10
NW	1.87E-10
NNW	2.15E-10

Period of Record: 9-1-76 to 8-31-78

* Measured relevant to the Reactor Vent.

Table 6 Monticello Offgas Stack Dispersion Parameters for Long Term Elevated Releases >500 Hrs/Yr or >150 Hrs/Qtr

Site Boundary Sector*	χ/Q (Sec/m^3)	D/Q (m^{-2})
N	7.04E-08	4.51E-09
NNE	7.06E-08	4.30E-09
NE	1.00E-07	6.18E-09
ENE	6.20E-08	2.34E-09
E	4.46E-08	2.77E-09
ESE	5.28E-08	3.93E-09
SE	5.50E-08	4.98E-09
SSE	3.99E-08	4.20E-09
S	1.83E-08	2.63E-09
SSW	1.17E-08	1.46E-09
SW	1.17E-08	1.46E-09
WSW	1.34E-08	1.34E-09
W	3.42E-08	1.67E-09
WNW	7.22E-08	2.43E-09
NW	5.67E-08	2.82E-09
NNW	1.08E-07	5.80E-09

Period of record: 9-1-76 to 8-31-78.

* Measured relevant to the Reactor Vent.

Table 7 Monticello Offgas Stack Dispersion Parameters for Long Term Elevated Releases >500 Hrs/Yr or >150 Hrs/Qtr

For Standard Distances (As Measured from the Offgas Stack) (χ/Q), sec/m^3

Miles

Sector*	0.1	0.2	0.3	0.4	0.5	0.6	0.7
N	2.39E-11	4.33E-08	6.96E-08	7.18E-08	7.08E-08	7.05E-08	7.15E-08
NNE	3.93E-11	6.93E-08	1.04E-07	1.03E-07	1.02E-07	1.01E-07	9.96E-08
NE	1.15E-11	2.27E-08	4.42E-08	5.50E-08	6.09E-08	6.34E-08	6.46E-08
ENE	1.00E-11	1.96E-08	3.74E-08	4.75E-08	5.48E-08	5.94E-08	6.22E-08
E	3.09E-12	7.35E-09	2.33E-08	3.64E-08	4.44E-08	4.93E-08	5.30E-08
ESE	2.80E-12	7.63E-09	2.67E-08	4.30E-08	5.31E-08	5.99E-08	6.61E-08
SE	5.57E-12	1.31E-08	3.90E-08	5.97E-08	7.41E-08	8.66E-08	9.91E-08
SSE	6.56E-12	1.40E-08	3.27E-08	4.50E-08	5.37E-08	6.41E-08	7.81E-08
S	4.93E-12	1.23E-08	3.06E-08	4.42E-08	5.35E-08	6.15E-08	6.95E-08
SSW	1.62E-12	4.83E-09	1.73E-08	2.93E-08	3.77E-08	4.45E-08	5.11E-08
SW	5.96E-13	2.06E-09	9.62E-09	1.69E-08	2.21E-08	2.73E-08	3.37E-08
WSW	3.07E-13	1.30E-09	7.80E-09	1.43E-08	1.87E-08	2.33E-08	2.94E-08
W	1.87E-12	6.43E-09	1.74E-08	2.59E-08	3.15E-08	3.63E-08	4.14E-08
WNW	1.56E-12	5.49E-09	2.06E-08	3.41E-08	4.21E-08	4.76E-08	5.27E-08
NW	5.29E-12	1.20E-08	3.15E-08	4.53E-08	5.46E-08	6.24E-08	6.92E-08
NNW	3.03E-11	5.55E-08	9.01E-08	9.73E-08	1.02E-07	1.07E-07	1.11E-07

Period of Record: 9-1-76 to 8-31-78

* Measured relevant to the Offgas Stack.

Table 7 Monticello Offgas Stack Dispersion Parameters for Long Term Elevated Releases >500 Hrs/Yr or >150 Hrs/Qtr (cont'd)

For Standard Distances (As Measured from the Offgas Stack) (χ/Q), sec/m^3

Miles

Sector*	0.8	0.9	1.0	1.1	1.2	1.3	1.4
N	7.07E-08	6.72E-08	6.55E-08	6.42E-08	6.30E-08	6.18E-08	6.05E-08
NNE	9.48E-08	8.63E-08	8.08E-08	7.65E-08	7.29E-08	6.97E-08	6.67E-08
NE	6.26E-08	5.76E-08	5.41E-08	5.13E-08	4.89E-08	4.69E-08	4.50E-08
ENE	6.13E-08	5.70E-08	5.38E-08	5.12E-08	4.89E-08	4.67E-08	4.47E-08
E	5.36E-08	5.10E-08	4.91E-08	4.74E-08	4.58E-08	4.43E-08	4.27E-08
ESE	6.89E-08	6.75E-08	6.63E-08	6.51E-08	6.36E-08	6.19E-08	6.00E-08
SE	1.06E-07	1.05E-07	1.04E-07	1.02E-07	9.96E-08	9.66E-08	9.32E-08
SSE	9.01E-08	9.61E-08	1.01E-07	1.04E-07	1.06E-07	1.06E-07	1.05E-07
S	7.41E-08	7.41E-08	7.42E-08	7.39E-08	7.31E-08	7.19E-08	7.04E-08
SSW	5.49E-08	5.49E-08	5.49E-08	5.44E-08	5.37E-08	5.26E-08	5.13E-08
SW	3.88E-08	4.13E-08	4.31E-08	4.43E-08	4.49E-08	4.49E-08	4.45E-08
WSW	3.49E-08	3.82E-08	4.10E-08	4.32E-08	4.46E-08	4.55E-08	4.58E-08
W	4.50E-08	4.59E-08	4.69E-08	4.77E-08	4.80E-08	4.80E-08	4.77E-08
WNW	5.52E-08	5.45E-08	5.42E-08	5.39E-08	5.33E-08	5.26E-08	5.16E-08
NW	7.18E-08	6.96E-08	6.77E-08	6.59E-08	6.40E-08	6.21E-08	6.01E-08
NNW	1.08E-07	9.96E-08	9.36E-08	8.85E-08	8.40E-08	8.00E-08	7.63E-08

Period of Record: 9-1-76 to 8-31-78

* Measured relevant to the Offgas Stack.

Table 7 Monticello Offgas Stack Dispersion Parameters for Long Term Elevated Releases >500 Hrs/Yr or >150 Hrs/Qtr (cont'd)

For Standard Distances (As Measured from the Offgas Stack) (χ/Q), sec/m^3

Miles

Sector*	1.5	1.6	1.7	1.8	1.9	2.0	2.1
N	5.91E-08	5.66E-08	5.43E-08	5.20E-08	4.99E-08	4.78E-08	4.59E-08
NNE	6.40E-08	6.06E-08	5.74E-08	5.45E-08	5.17E-08	4.92E-08	4.69E-08
NE	4.33E-08	4.23E-08	4.14E-08	4.06E-08	3.96E-08	3.88E-08	3.79E-08
ENE	4.28E-08	4.10E-08	3.93E-08	3.77E-08	3.62E-08	3.47E-08	3.34E-08
E	4.12E-08	3.94E-08	3.76E-08	3.60E-08	3.44E-08	3.29E-08	3.15E-08
ESE	5.80E-08	5.59E-08	5.39E-08	5.18E-08	4.98E-08	4.78E-08	4.60E-08
SE	8.97E-08	8.77E-08	8.55E-08	8.32E-08	8.07E-08	7.83E-08	7.59E-08
SSE	1.04E-08	9.98E-08	9.58E-08	9.19E-08	8.80E-08	8.42E-08	8.06E-08
S	6.85E-08	6.54E-08	6.23E-08	5.93E-08	5.65E-08	5.39E-08	5.14E-08
SSW	4.99E-08	5.03E-08	5.04E-08	5.04E-08	5.02E-08	4.99E-08	4.95E-08
SW	4.37E-08	4.46E-08	4.51E-08	4.54E-08	4.55E-08	4.54E-08	4.52E-08
WSW	4.57E-08	4.71E-08	4.81E-08	4.88E-08	4.92E-08	4.94E-08	4.95E-08
W	4.71E-08	4.79E-08	4.85E-08	4.89E-08	4.90E-08	4.90E-08	4.89E-08
WNW	5.05E-08	5.10E-08	5.12E-08	5.13E-08	5.12E-08	5.11E-08	5.08E-08
NW	5.81E-08	5.64E-08	5.47E-08	5.30E-08	5.13E-08	4.97E-08	4.82E-08
NNW	7.29E-08	6.89E-08	6.52E-08	6.18E-08	5.87E-08	5.58E-08	5.31E-08

Period of Record: 9-1-76 to 8-31-7

* Measured relevant to the Offgas Stack.

Table 7 Monticello Offgas Stack Dispersion Parameters for Long Term Elevated Releases >500 Hrs/Yr or >150 Hrs/Qtr (cont'd)

For Standard Distances (As Measured from the Offgas Stack) (χ/Q), sec/m^3

	Miles						
Sector*	2.2	2.3	2.4	2.5	2.6	2.7	2.8
N	4.41E-08	4.23E-08	4.07E-08	3.92E-08	3.82E-08	3.73E-08	3.64E-08
NNE	4.48E-08	4.28E-08	4.09E-08	3.92E-08	3.76E-08	3.61E-08	3.47E-08
NE	3.71E-08	3.63E-08	3.53E-08	3.47E-08	3.35E-08	3.24E-08	3.13E-08
ENE	3.21E-08	3.09E-08	2.98E-08	2.87E-08	2.76E-08	2.65E-08	2.55E-08
E	3.02E-08	2.90E-08	2.78E-08	2.67E-08	2.57E-08	2.47E-08	2.38E-08
ESE	4.42E-08	4.25E-08	4.09E-08	3.94E-08	3.79E-08	3.66E-08	3.53E-08
SE	7.35E-08	7.12E-08	6.89E-08	6.68E-08	6.38E-08	6.11E-08	5.85E-08
SSE	7.72E-08	7.39E-08	7.08E-08	6.79E-08	6.53E-08	6.28E-08	6.05E-08
S	4.91E-08	4.69E-08	4.48E-08	4.29E-08	4.20E-08	4.11E-08	4.03E-08
SSW	4.90E-08	4.85E-08	4.79E-08	4.73E-08	4.51E-08	4.30E-08	4.11E-08
SW	4.49E-08	4.46E-08	4.42E-08	4.38E-08	4.23E-08	4.09E-08	3.96E-08
WSW	4.93E-08	4.91E-08	4.88E-08	4.84E-08	4.63E-08	4.42E-08	4.24E-08
W	4.86E-08	4.83E-08	4.79E-08	4.75E-08	4.59E-08	4.44E-08	4.30E-08
WNW	5.05E-08	5.01E-08	4.97E-08	4.93E-08	4.84E-08	4.75E-08	4.66E-08
NW	4.67E-08	4.52E-08	4.38E-08	4.25E-08	4.19E-08	4.14E-08	4.08E-08
NNW	5.06E-08	4.83E-08	4.62E-08	4.42E-08	4.24E-08	4.07E-08	3.91E-08

Period of Record: 9-1-76 to 8-31-78

* Measured relevant to the Offgas Stack.

Table 7 Monticello Offgas Stack Dispersion Parameters for Long Term Elevated Releases >500 Hrs/Yr or >150 Hrs/Qtr (cont'd)

For Standard Distances (As Measured from the Offgas Stack) (χ/Q), sec/m^3

Miles

Sector*	2.9	3.0	3.1	3.2	3.3	3.4	3.5
N	3.55E-08	3.47E-08	3.39E-08	3.31E-08	3.24E-08	3.17E-08	3.10E-08
NNE	3.34E-08	3.22E-08	3.11E-08	3.00E-08	2.90E-08	2.80E-08	2.71E-08
NE	3.03E-08	2.93E-08	2.84E-08	2.76E-08	2.67E-08	2.60E-08	2.52E-08
ENE	2.46E-08	2.37E-08	2.29E-08	2.21E-08	2.14E-08	2.07E-08	2.00E-08
E	2.30E-08	2.22E-08	2.14E-08	2.07E-08	2.00E-08	1.94E-08	1.88E-08
ESE	3.41E-08	3.29E-08	3.18E-08	3.08E-08	2.98E-08	2.89E-08	2.80E-08
SE	5.62E-08	5.39E-08	5.18E-08	4.98E-08	4.80E-08	4.62E-08	4.46E-08
SSE	5.83E-08	5.62E-08	5.42E-08	5.23E-08	5.05E-08	4.89E-08	4.73E-08
S	3.94E-08	3.86E-08	3.78E-08	3.70E-08	3.63E-08	3.55E-08	3.49E-08
SSW	3.93E-08	3.77E-08	3.61E-08	3.47E-08	3.34E-08	3.21E-08	3.09E-08
SW	3.84E-08	3.72E-08	3.61E-08	3.51E-08	3.41E-08	3.32E-08	3.23E-08
WSW	4.06E-08	3.90E-08	3.74E-08	3.60E-08	3.47E-08	3.34E-08	3.22E-08
W	4.17E-08	4.04E-08	3.93E-08	3.81E-08	3.70E-08	3.60E-08	3.50E-08
WNW	4.58E-08	4.50E-08	4.42E-08	4.34E-08	4.27E-08	4.20E-08	4.14E-08
NW	4.02E-08	3.96E-08	3.90E-08	3.85E-08	3.79E-08	3.74E-08	3.68E-08
NNW	3.76E-08	3.62E-08	3.49E-08	3.36E-08	3.25E-08	3.14E-08	3.03E-08

Period of Record: 9-1-76 to 8-31-78

* Measured relevant to the Offgas Stack.

Table 7 Monticello Offgas Stack Dispersion Parameters for Long Term Elevated Releases >500 Hrs/Yr or >150 Hrs/Qtr (cont'd)

For Standard Distances (As Measured from the Offgas Stack) (χ/Q), sec/m^3

	Miles						
Sector*	3.6	3.7	3.8	3.9	4.0	4.1	4.2
N	3.00E-08	2.91E-08	2.82E-08	2.74E-08	2.66E-08	2.59E-08	2.51E-08
NNE	2.63E-08	2.54E-08	2.47E-08	2.40E-08	2.33E-08	2.26E-08	2.20E-08
NE	2.45E-08	2.39E-08	2.32E-08	2.26E-08	2.20E-08	2.15E-08	2.09E-08
ENE	1.94E-08	1.88E-08	1.83E-08	1.77E-08	1.73E-08	1.68E-08	1.63E-08
E	1.82E-08	1.77E-08	1.71E-08	1.66E-08	1.62E-08	1.57E-08	1.53E-08
ESE	2.72E-08	2.64E-08	2.56E-08	2.49E-08	2.42E-08	2.35E-08	2.29E-08
SE	4.30E-08	4.16E-08	4.02E-08	3.89E-08	3.77E-08	3.65E-08	3.54E-08
SSE	4.60E-08	4.49E-08	4.37E-08	4.27E-08	4.16E-08	4.06E-08	3.97E-08
S	3.39E-08	3.30E-08	3.22E-08	3.14E-08	3.06E-08	2.99E-08	2.92E-08
SSW	3.01E-08	2.93E-08	2.86E-08	2.79E-08	2.72E-08	2.65E-08	2.59E-08
SW	3.17E-08	3.12E-08	3.07E-08	3.02E-08	2.98E-08	2.93E-08	2.89E-08
WSW	3.17E-08	3.12E-08	3.07E-08	3.03E-08	2.98E-08	2.94E-08	2.89E-08
W	3.38E-08	3.26E-08	3.15E-08	3.05E-08	2.95E-08	2.86E-08	2.77E-08
WNW	3.99E-08	3.84E-08	3.71E-08	3.58E-08	3.46E-08	3.35E-08	3.24E-08
NW	3.60E-08	3.51E-08	3.43E-08	3.35E-08	3.28E-08	3.20E-08	3.13E-08
NNW	2.94E-08	2.84E-08	2.76E-08	2.67E-08	2.60E-08	2.52E-08	2.45E-08

Period of Record: 9-1-76 to 8-31-78

* Measured relevant to the Offgas Stack.

Table 7 Monticello Offgas Stack Dispersion Parameters for Long Term Elevated Releases >500 Hrs/Yr or >150 Hrs/Qtr (cont'd)

For Standard Distances (As Measured from the Offgas Stack) (χ/Q), sec/m^3

Miles

Sector*	4.3	4.4	4.5	4.6	4.7	4.8	4.9
N	2.45E-08	2.38E-08	2.32E-08	2.26E-08	2.20E-08	2.15E-08	2.10E-08
NNE	2.14E-08	2.08E-08	2.03E-08	1.98E-08	1.93E-08	1.88E-08	1.84E-08
NE	2.04E-08	1.99E-08	1.95E-08	1.90E-08	1.86E-08	1.82E-08	1.78E-08
ENE	1.59E-08	1.55E-08	1.51E-08	1.47E-08	1.44E-08	1.40E-08	1.37E-08
E	1.49E-08	1.45E-08	1.42E-08	1.38E-08	1.35E-08	1.31E-08	1.28E-08
ESE	2.23E-08	2.18E-08	2.12E-08	2.07E-08	2.02E-08	1.97E-08	1.93E-08
SE	3.43E-08	3.33E-08	3.24E-08	3.15E-08	3.06E-08	2.98E-08	2.90E-08
SSE	3.88E-08	3.79E-08	3.71E-08	3.60E-08	3.50E-08	3.41E-08	3.32E-08
S	2.85E-08	2.79E-08	2.73E-08	2.65E-08	2.57E-08	2.50E-08	2.43E-08
SSW	2.53E-08	2.48E-08	2.42E-08	2.35E-08	2.28E-08	2.22E-08	2.16E-08
SW	2.85E-08	2.81E-08	2.77E-08	2.69E-08	2.61E-08	2.53E-08	2.46E-08
WSW	2.85E-08	2.81E-08	2.77E-08	2.69E-08	2.61E-08	2.53E-08	2.46E-08
W	2.68E-08	2.60E-08	2.53E-08	2.46E-08	2.39E-08	2.33E-08	2.26E-08
WNW	3.14E-08	3.05E-08	2.95E-08	2.87E-08	2.79E-08	2.71E-08	2.64E-08
NW	3.07E-08	3.00E-08	2.94E-08	2.86E-08	2.78E-08	2.70E-08	2.63E-08
NNW	2.38E-08	2.32E-08	2.26E-08	2.20E-08	2.14E-08	2.08E-08	2.03E-08

Period of Record: 9-1-76 to 8-31-78

Measured relevant to the Offgas Stack.

Table 7 Monticello Offgas Stack Dispersion Parameters for Long Term Elevated Releases >500 Hrs/Yr or >150 Hrs/Qtr (cont'd)

For Standard Distances (As Measured from the Offgas Stack) (χ/Q), sec/m^3

Sector*	Miles 5.0
N	2.05E-08
NNE	1.79E-08
NE	1.74E-08
ENE	1.34E-08
E	1.25E-08
ESE	1.88E-08
SE	2.82E-08
SSE	3.23E-08
S	2.36E-08
SSW	2.10E-08
SW	2.39E-08
WSW	2.39E-08
W	2.21E-08
WNW	2.57E-08
NW	2.57E-08
NNW	1.98E-08

Period of Record: 9-1-76 to 8-31-78

* Measured relevant to the Offgas Stack.

Table 8 Monticello Offgas Stack Dispersion Parameters for Long Term Elevated Releases >500 Hrs/Yr or >150 Hrs/Qtr

For Standard Distances (As Measured from the Offgas Stack) (D/Q), m^{-2}

Miles

Sector*	0.1	0.2	0.3	0.4	0.5	0.6	0.7
N	1.44E-09	4.89E-09	6.31E-09	5.66E-09	5.00E-09	4.44E-09	4.00E-09
NNE	2.25E-09	7.63E-09	9.79E-09	8.72E-09	7.59E-09	6.61E-09	5.82E-09
NE	1.06E-09	3.60E-09	4.65E-09	4.17E-09	3.68E-09	3.27E-09	2.94E-09
ENE	9.73E-10	3.30E-09	4.25E-09	3.81E-09	3.34E-09	2.95E-09	2.64E-09
E	7.84E-10	2.67E-09	3.45E-09	3.11E-09	2.77E-09	2.49E-09	2.27E-09
ESE	1.06E-09	3.61E-09	4.70E-09	4.31E-09	3.92E-09	3.63E-09	3.42E-09
SE	1.42E-09	4.87E-09	6.41E-09	6.00E-09	5.64E-09	5.40E-09	5.30E-09
SSE	1.19E-09	4.11E-09	5.46E-09	5.20E-09	5.00E-09	4.92E-09	4.96E-09
S	9.90E-10	3.38E-09	4.42E-09	4.08E-09	3.75E-09	3.50E-09	3.34E-09
SSW	5.92E-10	2.02E-09	2.65E-09	2.45E-09	2.25E-09	2.11E-09	2.03E-09
SW	3.23E-10	1.11E-09	1.48E-09	1.41E-09	1.35E-09	1.33E-09	1.34E-09
WSW	2.97E-10	1.03E-09	1.38E-09	1.33E-09	1.31E-09	1.32E-09	1.36E-09
W	4.41E-10	1.51E-09	1.98E-09	1.85E-09	1.72E-09	1.64E-09	1.59E-09
WNW	6.23E-10	2.13E-09	1.78E-09	2.56E-09	2.35E-09	2.20E-09	2.10E-09
NW	7.59E-10	2.59E-09	3.39E-09	3.13E-09	2.87E-09	2.69E-09	2.57E-09
NNW	1.94E-09	6.59E-09	8.48E-09	7.59E-09	6.66E-09	5.88E-09	5.25E-09

Period of Record: 9-1-76 to 8-31-78

* Measured relevant to the Offgas Stack.

Table 8 Monticello Offgas Stack Dispersion Parameters for Long Term Elevated Releases >500 Hrs/Yr or >150 Hrs/Qtr (cont'd)

For Standard Distances (As Measured from the Offgas Stack) (D/Q), m^{-2}

Miles

Sector*	0.8	0.9	1.0	1.1	1.2	1.3	1.4
N	3.47E-09	2.90E-09	2.39E-09	1.98E-09	1.67E-09	1.42E-09	1.23E-09
NNE	4.93E-09	4.00E-09	3.24E-09	2.65E-09	2.20E-09	1.85E-09	1.58E-09
NE	2.56E-09	2.13E-09	1.76E-09	1.46E-09	1.23E-09	1.05E-09	9.02E-10
ENE	2.27E-09	1.88E-09	1.54E-09	1.27E-09	1.06E-09	9.03E-10	7.75E-10
E	2.01E-09	1.70E-09	1.41E-09	1.18E-09	1.00E-09	8.59E-10	7.45E-10
ESE	3.12E-09	2.74E-09	2.32E-09	1.97E-09	1.69E-09	1.47E-09	1.29E-09
SE	5.02E-09	4.56E-09	3.94E-09	3.38E-09	2.94E-09	2.58E-09	2.29E-09
SSE	4.81E-09	4.46E-09	3.89E-09	3.37E-09	2.95E-09	2.61E-09	2.32E-09
S	3.09E-09	2.74E-09	2.34E-09	1.99E-09	1.72E-09	1.50E-09	1.32E-09
SSW	1.88E-09	1.67E-09	1.43E-09	1.22E-09	1.05E-09	9.18E-10	8.09E-10
SW	1.30E-09	1.21E-09	1.05E-09	9.14E-10	8.00E-10	7.06E-10	6.29E-10
WSW	1.35E-09	1.27E-09	1.12E-09	9.76E-10	8.59E-10	7.62E-10	6.81E-10
W	1.49E-09	1.35E-09	1.16E-09	9.93E-10	8.61E-10	7.54E-10	6.66E-10
WNW	1.93E-09	1.71E-09	1.46E-09	1.24E-09	1.07E-09	9.35E-10	8.22E-10
NW	2.37E-09	2.10E-09	1.80E-09	1.53E-09	1.32E-09	1.15E-09	1.01E-09
NNW	4.52E-09	3.73E-09	3.06E-09	2.53E-09	2.12E-09	1.80E-09	1.54E-09

Period of Record: 9-1-76 to 8-31-78

* Measured relevant to the Offgas Stack.

Table 8 Monticello Offgas Stack Dispersion Parameters for Long Term Elevated Releases >500 Hrs/Yr or >150 Hrs/Qtr (cont'd)

For Standard Distances (As Measured from the Offgas Stack) (D/Q), m^{-2}

	Miles						
Sector*	1.5	1.6	1.7	1.8	1.9	2.0	2.1
N	1.07E-09	9.36E-10	8.27E-10	7.36E-10	6.92E-10	6.30E-10	5.75E-10
NNE	1.36E-09	1.18E-09	1.03E-09	9.08E-10	8.58E-10	7.77E-10	7.07E-10
NE	7.84E-10	6.88E-10	6.08E-10	5.41E-10	5.09E-10	4.63E-10	4.23E-10
ENE	6.72E-10	5.88E-10	5.18E-10	4.59E-10	4.32E-10	3.93E-10	3.58E-10
E	6.51E-10	5.75E-10	5.10E-10	4.56E-10	4.28E-10	3.90E-10	3.57E-10
ESE	1.14E-09	1.01E-09	9.06E-10	8.16E-10	7.64E-10	6.99E-10	6.43E-10
SE	2.04E-09	1.83E-09	1.65E-09	1.50E-09	1.40E-09	1.28E-09	1.18E-09
SSE	2.08E-09	1.87E-09	1.70E-09	1.54E-09	1.44E-09	1.32E-09	1.22E-09
S	1.17E-09	1.04E-09	9.35E-10	8.44E-10	7.89E-10	7.23E-10	6.66E-10
SSW	7.17E-10	6.41E-10	5.76E-10	5.20E-10	4.86E-10	4.46E-10	4.10E-10
SW	5.63E-10	5.08E-10	4.60E-10	4.18E-10	3.90E-10	3.59E-10	3.31E-10
WSW	6.12E-10	5.53E-10	5.02E-10	4.58E-10	4.26E-10	3.93E-10	3.63E-10
W	5.93E-10	5.32E-10	4.79E-10	4.34E-10	4.05E-10	3.72E-10	3.42E-10
WNW	7.28E-10	6.50E-10	5.84E-10	5.27E-10	4.92E-10	4.51E-10	4.15E-10
NW	8.97E-10	8.01E-10	7.20E-10	6.50E-10	6.07E-10	5.57E-10	5.12E-10
NNW	1.34E-09	1.17E-09	1.03E-09	9.12E-10	8.59E-10	7.81E-10	7.12E-10

Period of Record: 9-1-76 to 8-31-78

* Measured relevant to the Offgas Stack.

Table 8 Monticello Offgas Stack Dispersion Parameters for Long Term Elevated Releases >500 Hrs/Yr or >150 Hrs/Qtr (cont'd)

For Standard Distances (As Measured from the Offgas Stack) (D/Q), m^{-2}

Miles

Sector*	2.2	2.3	2.4	2.5	2.6	2.7	2.8
N	5.28E-10	4.86E-10	4.49E-10	4.17E-10	3.87E-10	3.61E-10	3.37E-10
NNE	6.46E-10	5.93E-10	5.46E-10	5.05E-10	4.68E-10	4.35E-10	4.06E-10
NE	3.88E-10	3.58E-10	3.30E-10	3.06E-10	2.85E-10	2.65E-10	2.48E-10
ENE	3.28E-10	3.02E-10	2.79E-10	2.58E-10	2.40E-10	2.24E-10	2.09E-10
E	3.28E-10	3.03E-10	2.80E-10	2.60E-10	2.42E-10	2.26E-10	2.11E-10
ESE	5.93E-10	5.48E-10	5.09E-10	4.73E-10	4.41E-10	4.12E-10	3.86E-10
SE	1.09E-09	1.01E-09	9.43E-10	8.78E-10	8.21E-10	7.68E-10	7.20E-10
SSE	1.13E-09	1.05E-09	9.78E-10	9.12E-10	8.52E-10	7.98E-10	7.48E-10
S	6.14E-10	5.69E-10	5.28E-10	4.92E-10	4.59E-10	4.29E-10	4.02E-10
SSW	3.79E-10	3.76E-10	3.90E-10	3.92E-10	3.62E-10	3.34E-10	3.10E-10
SW	3.07E-10	2.98E-10	3.09E-10	3.18E-10	2.93E-10	2.71E-10	2.51E-10
WSW	3.36E-10	3.41E-10	3.44E-10	3.58E-10	3.30E-10	3.05E-10	2.83E-10
W	3.17E-10	3.11E-10	3.09E-10	3.19E-10	2.94E-10	2.72E-10	2.53E-10
WNW	3.83E-10	3.86E-10	3.86E-10	3.89E-10	3.59E-10	3.45E-10	3.20E-10
NW	4.73E-10	4.38E-10	4.07E-10	3.78E-10	3.53E-10	3.30E-10	3.09E-10
NNW	6.53E-10	6.01E-10	5.55E-10	5.14E-10	4.77E-10	4.44E-10	4.15E-10

Period of Record: 9-1-76 to 8-31-78

* Measured relevant to the Offgas Stack.

Table 8 Monticello Offgas Stack Dispersion Parameters for Long Term Elevated Releases >500 Hrs/Yr or >150 Hrs/Qtr (cont'd)

For Standard Distances (As Measured from the Offgas Stack) (D/Q), m^{-2}

	Miles						
Sector*	2.9	3.0	3.1	3.2	3.3	3.4	3.5
N	3.16E-10	2.96E-10	2.78E-10	2.62E-10	2.47E-10	2.33E-10	2.20E-10
NNE	3.79E-10	3.55E-10	3.33E-10	3.13E-10	2.95E-10	2.78E-10	2.63E-10
NE	2.32E-10	2.18E-10	2.04E-10	1.92E-10	1.81E-10	1.71E-10	1.62E-10
ENE	1.95E-10	1.83E-10	1.72E-10	1.62E-10	1.52E-10	1.44E-10	1.36E-10
E	1.98E-10	1.86E-10	1.75E-10	1.64E-10	1.55E-10	1.46E-10	1.39E-10
ESE	3.62E-10	3.40E-10	3.20E-10	3.02E-10	2.85E-10	2.69E-10	2.55E-10
SE	6.76E-10	6.35E-10	5.98E-10	5.64E-10	5.33E-10	5.04E-10	4.77E-10
SSE	7.03E-10	6.62E-10	6.23E-10	5.88E-10	5.56E-10	5.26E-10	4.98E-10
S	3.77E-10	3.54E-10	3.33E-10	3.14E-10	2.97E-10	2.81E-10	2.66E-10
SSW	2.88E-10	2.68E-10	2.50E-10	2.34E-10	2.20E-10	2.06E-10	1.94E-10
SW	2.44E-10	2.27E-10	2.12E-10	1.98E-10	1.86E-10	1.75E-10	1.64E-10
WSW	2.63E-10	2.45E-10	2.29E-10	2.14E-10	2.01E-10	1.89E-10	1.78E-10
W	2.47E-10	2.30E-10	2.15E-10	2.01E-10	1.88E-10	1.77E-10	1.66E-10
WNW	2.97E-10	2.76E-10	2.58E-10	2.41E-10	2.26E-10	2.12E-10	2.00E-10
NW	2.90E-10	2.73E-10	2.57E-10	2.42E-10	2.26E-10	2.16E-10	2.04E-10
NNW	3.88E-10	3.64E-10	3.41E-10	3.21E-10	3.03E-10	2.86E-10	2.70E-10

Period of Record: 9-1-76 to 8-31-78

* Measured relevant to the Offgas Stack.

Table 8 Monticello Offgas Stack Dispersion Parameters for Long Term Elevated Releases >500 Hrs/Yr or >150 Hrs/Qtr (cont'd)

For Standard Distances (As Measured from the Offgas Stack) (D/Q), m^{-2}

Miles

Sector*	3.6	3.7	3.8	3.9	4.0	4.1	4.2
N	2.09E-10	1.98E-10	1.88E-10	1.78E-10	1.70E-10	1.62E-10	1.54E-10
NNE	2.49E-10	2.36E-10	2.24E-10	2.13E-10	2.02E-10	1.93E-10	1.84E-10
NE	1.53E-10	1.45E-10	1.38E-10	1.31E-10	1.25E-10	1.19E-10	1.13E-10
ENE	1.29E-10	1.22E-10	1.16E-10	1.10E-10	1.05E-10	9.98E-11	9.51E-11
E	1.31E-10	1.24E-10	1.18E-10	1.12E-10	1.07E-10	1.02E-10	9.71E-11
ESE	2.42E-10	2.29E-10	2.18E-10	2.07E-10	1.97E-10	1.88E-10	1.79E-10
SE	4.53E-10	4.30E-10	4.08E-10	3.88E-10	3.69E-10	3.52E-10	3.36E-10
SSE	4.72E-10	4.48E-10	4.26E-10	4.05E-10	3.85E-10	3.67E-10	3.50E-10
S	2.52E-10	2.46E-10	2.34E-10	2.32E-10	2.34E-10	2.23E-10	2.12E-10
SSW	1.83E-10	1.73E-10	1.64E-10	1.59E-10	1.51E-10	1.43E-10	1.36E-10
SW	1.55E-10	1.46E-10	1.38E-10	1.31E-10	1.24E-10	1.18E-10	1.12E-10
WSW	1.68E-10	1.62E-10	1.54E-10	1.46E-10	1.38E-10	1.31E-10	1.25E-10
W	1.57E-10	1.48E-10	1.40E-10	1.33E-10	1.26E-10	1.20E-10	1.14E-10
WNW	1.88E-10	1.78E-10	1.68E-10	1.59E-10	1.51E-10	1.44E-10	1.37E-10
NW	1.94E-10	1.86E-10	1.77E-10	1.73E-10	1.76E-10	1.67E-10	1.59E-10
NNW	2.56E-10	2.43E-10	2.30E-10	2.19E-10	2.08E-10	1.98E-10	1.89E-10

Period of Record: 9-1-76 to 8-31-78

* Measured relevant to the Offgas Stack.

Table 8 Monticello Offgas Stack Dispersion Parameters for Long Term Elevated Releases >500 Hrs/Yr or >150 Hrs/Qtr (cont'd)

For Standard Distances (As Measured from the Offgas Stack) (D/Q), m^{-2}

	Miles						
Sector*	4.3	4.4	4.5	4.6	4.7	4.8	4.9
N	1.47E-10	1.41E-10	1.34E-10	1.29E-10	1.23E-10	1.18E-10	1.13E-10
NNE	1.75E-10	1.67E-10	1.60E-10	1.53E-10	1.47E-10	1.41E-10	1.35E-10
NE	1.08E-10	1.03E-10	9.88E-11	9.45E-11	9.05E-11	8.68E-11	8.32E-11
ENE	9.08E-11	8.67E-11	8.29E-11	7.94E-11	7.60E-11	7.28E-11	6.99E-11
E	9.26E-11	8.85E-11	8.46E-11	8.10E-11	7.75E-11	7.43E-11	7.13E-11
ESE	1.71E-10	1.63E-10	1.56E-10	1.49E-10	1.43E-10	1.37E-10	1.31E-10
SE	3.20E-10	3.06E-10	2.92E-10	2.80E-10	2.68E-10	2.57E-10	2.46E-10
SSE	3.34E-10	3.19E-10	3.05E-10	2.92E-10	2.80E-10	2.68E-10	2.57E-10
S	2.08E-10	1.98E-10	1.89E-10	1.81E-10	1.73E-10	1.66E-10	1.59E-10
SSW	1.30E-10	1.24E-10	1.18E-10	1.13E-10	1.08E-10	1.03E-10	9.90E-11
SW	1.08E-10	1.03E-10	9.82E-11	9.39E-11	8.98E-11	8.59E-11	8.24E-11
WSW	1.19E-10	1.13E-10	1.08E-10	1.03E-10	9.88E-11	9.46E-11	9.06E-11
W	1.08E-10	1.03E-10	9.87E-11	9.43E-11	9.02E-11	8.64E-11	8.28E-11
WNW	1.30E-10	1.24E-10	1.18E-10	1.13E-10	1.08E-10	1.04E-10	9.94E-11
NW	1.58E-10	1.51E-10	1.44E-10	1.38E-10	1.32E-10	1.26E-10	1.21E-10
NNW	1.80E-10	1.72E-10	1.65E-10	1.58E-10	1.51E-10	1.45E-10	1.39E-10

Period of Record: 9-1-76 to 8-31-78

* Measured relevant to the Offgas Stack.

Table 8 Monticello Offgas Stack Dispersion Parameters for Long Term Elevated Releases >500 Hrs/Yr or >150 Hrs/Qtr (cont'd)

For Standard Distances (As Measured from the Offgas Stack) (D/Q), m^{-2}

Sector*	Miles 5.0
N	1.09E-10
NNE	1.30E-10
NE	7.99E11
ENE	6.71E-11
E	6.84E-11
ESE	1.26E-10
SE	2.36E-10
SSE	2.46E-10
S	1.52E-10
SSW	9.49E-11
SW	7.90E-11
WSW	8.69E-11
W	7.94E-11
WNW	9.53E-11
NW	1.16E-10
NNW	1.33E-10

Period of Record: 9-1-76 to 8-31-78

* Measured relevant to the Offgas Stack.

Table 9 Monticello Offgas Stack Dispersion Parameters for Short Term Elevated Releases ≤500 Hrs/Yr or ≤150 Hrs/Qtr

Site Boundary Sector*	χ/Q (sec/m^3)	D/q (m^{-2})
N	1.55E-07	9.93E-09
NNE	1.41E-07	8.59E-09
NE	1.88E-07	1.16E-08
ENE	1.60E-07	6.04E-09
E	1.47E-07	9.15E-09
ESE	***	***
SE	***	***
SSE	***	***
S	***	***
SSW	***	***
SW	***	***
WSW	***	***
W	5.95E-08	2.91E-09
WNW	1.39E-07	4.68E-09
NW	***	***
NNW	2.33E-07	1.25E-08

Period of record: 9-1-76 to 8-31-78

* Measured relevant to the Offgas Stack.

*** See appropriate offgas stack long term elevated release values.

Table 10 Monticello Offgas Stack Dispersion Parameters for Short Term Elevated Releases ≤500 Hrs/Yr or ≤150 Hrs/Qtr

For Standard Distances (As Measured from the Offgas Stack) (χ/q), sec/m^3

Miles

Sector*	0.1	0.2	0.3	0.4	0.5	0.6	0.7
N	**	**	**	1.67E-07	1.85E-07	1.50E-07	1.18E-07
NNE	**	**	**	2.82E-07	2.50E-07	2.12E-07	1.69E-07
NE	**	**	**	7.93E-08	1.29E-07	1.21E-07	1.08E-07
ENE	**	**	**	1.63E-07	1.87E-07	1.77E-07	1.46E-07
E	**	**	**	8.63E-08	1.47E-07	1.29E-07	1.07E-07
ESE	**	**	**	***	***	6.17E-08	1.02E-07
SE	**	**	**	***	***	***	1.17E-07
SSE	**	**	**	***	***	***	1.04E-07
S	**	**	**	***	***	7.75E-08	1.13E-07
SSW	**	**	**	***	***	7.15E-08	1.03E-07
SW	**	**	**	***	***	4.73E-08	8.22E-08
WSW	**	**	**	***	***	3.82E-08	6.85E-08
W	**	**	**	***	4.06E-08	7.49E-08	8.73E-08
WNW	**	**	**	***	4.56E-08	8.41E-08	9.88E-08
NW	**	**	**	***	***	7.36E-08	1.08E-07
NNW	**	**	**	2.73E-07	2.57E-07	2.37E-07	1.94E-07

Period of Record: 9-1-76 to 8-31-78

* Measured relevant to the Offgas Stack.

** Values less than the value for 0.4 miles.

*** See appropriate offgas stack long term elevated release values.

Table 10 Monticello Offgas Stack Dispersion Parameters for Short Term Elevated Releases ≤500 Hrs/Yr or ≤150 Hrs/Qtr (cont'd)

For Standard Distances (As Measured from the Offgas Stack) (χ/q), sec/m^3

	Miles						
Sector*	0.8	0.9	1.0	1.1	1.2	1.3	1.4
N	1.52E-07	1.77E-07	1.94E-07	1.82E-07	1.96E-07	1.87E-07	2.07E-07
NNE	1.83E-07	2.05E-07	2.18E-07	2.30E-07	2.15E-07	1.99E-07	2.13E-07
NE	1.30E-07	1.60E-07	1.67E-07	1.75E-07	1.76E-07	1.61E-07	1.55E-07
ENE	1.62E-07	1.80E-07	1.75E-07	1.84E-07	1.96E-07	1.94E-07	1.91E-07
E	1.38E-07	1.62E-07	1.65E-07	1.75E-07	1.72E-07	1.59E-07	1.77E-07
ESE	1.36E-07	1.62E-07	1.71E-07	1.57E-07	1.62E-07	1.64E-07	1.70E-07
SE	1.56E-07	1.84E-07	1.98E-07	1.93E-07	2.02E-07	2.06E-07	2.46E-07
SSE	1.42E-07	1.78E-07	1.97E-07	2.50E-07	2.26E-07	2.35E-07	2.77E-07
S	1.55E-07	1.86E-07	2.07E-07	1.92E-07	2.08E-07	2.01E-07	2.71E-07
SSW	1.43E-07	1.64E-07	1.81E-07	1.86E-07	1.83E-07	1.79E-07	2.01E-07
SW	1.17E-07	1.45E-07	1.63E-07	1.77E-07	1.70E-07	1.74E-07	2.58E-07
WSW	9.91E-07	1.25E-07	1.31E-07	1.43E-07	1.62E-07	1.59E-07	2.45E-07
W	1.25E-07	1.56E-07	1.76E-07	1.86E-07	2.00E-07	2.04E-07	2.77E-07
WNW	1.39E-07	1.71E-07	1.89E-07	1.96E-07	2.04E-07	2.12E-07	2.79E-07
NNW	2.00E-07	2.24E-07	2.43E-07	2.48E-07	2.36E-07	2.14E-07	3.06E-07

Period of Record: 9-1-76 to 8-31-78

* Measured relevant to the Offgas Stack.

** Values less than the value for 0.4 miles.

*** See appropriate offgas stack long term elevated release values.

Table 10 Monticello Offgas Stack Dispersion Parameters for Short Term Elevated Releases ≤500 Hrs/Yr or ≤150 Hrs/Qtr (cont'd)

For Standard Distances (As Measured from the Offgas Stack) (χ/q), sec/m^3

	Miles						
Sector*	1.5	1.6	1.7	1.8	1.9	2.0	2.1
N	2.56E-07	1.89E-07	2.10E-07	2.05E-07	1.94E-07	1.88E-07	1.79E-07
NNE	2.59E-07	1.97E-07	2.23E-07	2.13E-07	1.97E-07	1.87E-07	1.77E-07
NE	1.71E-07	1.63E-07	1.55E-07	1.86E-07	1.77E-07	1.74E-07	1.66E-07
ENE	1.82E-07	1.67E-07	2.13E-07	1.89E-07	1.74E-07	1.69E-07	1.64E-07
E	1.73E-07	1.61E-07	1.51E-07	1.88E-07	1.75E-07	1.66E-07	1.59E-07
ESE	1.84E-07	1.77E-07	1.70E-07	***	1.55E-07	1.52E-07	1.50E-07
SE	2.06E-07	2.05E-07	1.90E-07	2.00E-07	2.01E-07	1.89E-07	1.77E-07
SSE	2.25E-07	2.10E-07	2.01E-07	2.21E-07	1.77E-07	1.78E-07	1.78E-07
S	2.10E-07	***	2.38E-07	2.35E-07	2.18E-07	2.04E-07	2.97E-07
SSW	1.90E-07	1.84E-07	2.46E-07	2.34E-07	2.24E-07	2.20E-07	2.17E-07
SW	1.80E-07	1.74E-07	1.69E-07	1.87E-07	2.01E-07	1.99E-07	1.91E-07
WSW	1.78E-07	1.76E-07	1.72E-07	1.89E-07	2.00E-07	1.99E-07	1.94E-07
W	2.14E-07	2.22E-07	2.50E-07	2.50E-07	2.32E-07	2.31E-07	2.23E-07
WNW	1.96E-07	1.87E-07	1.81E-07	1.97E-07	2.11E-07	2.09E-07	2.01E-07
NW	2.00E-07	1.90E-07	2.59E-07	2.40E-07	2.28E-07	2.10E-07	2.01E-07
NNW	2.28E-07	2.01E-07	1.96E-07	1.92E-07	1.87E-07	1.81E-07	1.74E-07

Period of Record: 9-1-76 to 8-31-78

* Measured relevant to the Offgas Stack.

** Values less than the value for 0.4 miles.

*** See appropriate offgas stack long term elevated release values.

Table 10 Monticello Offgas Stack Dispersion Parameters for Short Term Elevated Releases ≤500 Hrs/Yr or ≤150 Hrs/Qtr (cont'd)

For Standard Distances (As Measured from the Offgas Stack) (χ/q), sec/m³

Miles

Sector*	2.2	2.3	2.4	2.5	2.6	2.7	2.8
N	1.70E-07	1.66E-07	1.58E-07	1.54E-07	1.51E-07	1.47E-07	1.37E-07
NNE	1.70E-07	1.62E-07	1.57E-07	1.51E-07	1.46E-07	1.44E-07	1.38E-07
NE	1.60E-07	1.53E-07	1.53E-07	1.47E-07	1.40E-07	1.36E-07	1.30E-07
ENE	1.57E-07	1.50E-07	1.47E-07	1.44E-07	1.36E-07	1.33E-07	1.28E-07
E	1.49E-07	1.44E-07	1.36E-07	1.33E-07	1.27E-07	1.23E-07	1.17E-07
ESE	1.48E-07	1.46E-07	1.43E-07	1.38E-07	1.33E-07	1.28E-07	1.23E-07
SE	1.95E-07	1.68E-07	1.64E-07	1.61E-07	1.55E-07	1.66E-07	1.60E-07
SSE	1.69E-07	1.58E-07	1.58E-07	1.50E-07	1.42E-07	1.35E-07	1.60E-07
S	1.65E-07	1.58E-07	1.51E-07	1.46E-07	1.41E-07	1.40E-07	1.65E-07
SSW	2.10E-07	2.11E-07	2.12E-07	1.89E-07	1.82E-07	1.76E-07	1.71E-07
SW	1.81E-07	1.90E-07	1.93E-07	1.93E-07	2.32E-07	2.23E-07	2.11E-07
WSW	1.82E-07	1.86E-07	1.79E-07	1.72E07	1.90E-07	1.84E-07	2.12E-07
W	2.15E-07	2.18E-07	2.20E-07	2.19E-07	2.10E-07	2.08E-07	2.05E-07
WNW	1.89E-07	1.89E-07	1.90E-07	1.93E-07	2.26E-07	2.18E-07	2.11E-07
NW	1.91E-07	1.86E-07	1.80E-07	1.76E-07	1.72E-07	1.69E-07	1.64E-07
NNW	1.72E-07	1.68E-07	1.68E-07	1.59E-07	1.54E-07	1.45E-07	1.36E-07

Period of Record: 9-1-76 to 8-31-78

* Measured relevant to the Offgas Stack.

** Values less than the value for 0.4 miles.

*** See appropriate offgas stack long term elevated release values.

Table 10 Monticello Offgas Stack Dispersion Parameters for Short Term Elevated Releases ≤500 Hrs/Yr or ≤150 Hrs/Qtr (cont'd)

For Standard Distances (As Measured from the Offgas Stack) (χ/q), sec/m^3

Miles

Sector*	2.9	3.0	3.1	3.2	3.3	3.4	3.5
N	1.35E-07	1.34E-07	1.32E-07	1.30E-07	1.28E-07	1.25E-07	1.23E-07
NNE	1.30E-07	1.26E-07	1.22E-07	1.19E-07	1.15E-07	1.12E-07	1.09E-07
NE	1.22E-07	1.20E-07	1.16E-07	1.14E-07	1.11E-07	1.09E-07	1.06E-07
ENE	1.21E-07	1.81E-07	1.15E-07	1.13E-07	1.10E-07	1.07E-07	1.04E-07
E	1.13E-07	1.10E-07	1.05E-07	1.03E-07	1.01E-07	1.01E-07	9.17E-08
ESE	1.19E-07	1.14E-07	1.08E-07	1.06E-07	1.03E-07	9.93E-08	9.89E-08
SE	1.31E-07	1.33E-07	1.35E-07	1.32E-07	1.26E-07	1.20E-07	1.15E-07
SSE	1.30E-07	1.32E-07	1.34E-07	1.35E-07	1.31E-07	1.26E-07	1.22E-07
S	1.63E-07	1.54E-07	1.46E-07	1.42E-07	1.34E-07	1.33E-07	1.32E-07
SSW	1.66E-07	1.57E-07	1.51E-07	1.46E-07	1.39E-07	1.34E-07	1.31E-07
SW	1.97E-07	1.82E-07	1.79E-07	1.71E-07	1.64E-07	1.59E-07	1.54E-07
WSW	2.02E-07	1.95E-07	1.85E-07	1.77E-07	1.69E-07	1.62E-07	1.54E-07
W	2.01E-07	1.92E-07	1.90E-07	1.84E-07	1.82E-07	1.78E-07	1.71E-07
WNW	2.02E-07	1.96E-07	1.92E-07	1.90E-07	1.85E-07	1.78E-07	1.75E-07
NW	1.70E-07	1.50E-07	1.48E-07	1.47E-07	1.39E-07	1.37E-07	1.38E-07
NNW	1.31E-07	1.30E-07	1.27E-07	1.22E-07	1.19E-07	1.16E-07	1.13E-07

Period of Record: 9-1-76 to 8-31-78

* Measured relevant to the Offgas Stack.

** Values less than the value for 0.4 miles.

*** See appropriate offgas stack long term elevated release values.

Table 10 Monticello Offgas Stack Dispersion Parameters for Short Term Elevated Releases ≤500 Hrs/Yr or ≤150 Hrs/Qtr (cont'd)

For Standard Distances (As Measured from the Offgas Stack) (χ/q), sec/m³

Miles

Sector*	3.6	3.7	3.8	3.9	4.0	4.1	4.2
N	1.18E-07	1.15E-07	1.14E-07	1.11E-07	1.08E-07	1.06E-07	1.05E-07
NNE	1.07E-07	1.05E-07	1.01E-07	9.83E-08	9.61E-08	9.38E-08	9.04E-08
NE	1.03E-07	1.01E-07	9.84E-08	9.65E-08	9.20E-08	9.00E-08	8.81E-08
ENE	1.03E-07	1.01E-07	9.56E-08	9.34E-08	9.07E-08	8.79E-08	8.58E-08
E	9.00E-08	8.74E-08	8.37E-08	8.17E-08	7.94E-08	7.80E-08	7.64E-08
ESE	9.67E-08	9.46E-08	8.97E-08	8.91E-08	8.79E-08	8.64E-08	8.45E-08
SE	1.10E-07	1.06E-07	1.06E-07	1.02E-07	9.89E-08	1.03E-07	9.99E-08
SSE	1.18E-07	1.15E-07	1.11E-07	1.08E-07	1.12E-07	1.10E-07	1.08E-07
S	1.27E-07	1.23E-07	1.21E-07	1.17E-07	1.13E-07	1.10E-07	1.10E-07
SSW	1.27E-07	1.24E-07	1.21E-07	1.17E-07	1.15E-07	1.13E-07	1.08E-07
SW	1.52E-07	1.46E-07	1.43E-07	1.43E-07	1.41E-07	1.40E-07	1.38E-07
WSW	1.49E-07	1.43E-07	1.44E-07	1.43E-07	1.34E-07	1.33E-07	1.34E-07
W	1.66E-07	1.61E-07	1.56E-07	1.49E-07	1.42E-07	1.39E-07	1.35E-07
WNW	1.73E-07	1.67E-07	1.63E-07	1.58E-07	1.54E-07	1.49E-07	1.45E-07
NW	1.34E-07	1.27E-07	1.25E-07	1.24E-07	1.21E-07	1.19E-07	1.17E-07
NNW	1.10E-07	1.07E-07	1.02E-07	1.00E-07	9.75E-08	9.52E-08	9.37E-08

Period of Record: 9-1-76 to 8-31-78

* Measured relevant to the Offgas Stack.

** Values less than the value for 0.4 miles.

*** See appropriate offgas stack long term elevated release values.

Table 10 Monticello Offgas Stack Dispersion Parameters for Short Term Elevated Releases ≤500 Hrs/Yr or ≤150 Hrs/Qtr (cont'd)

For Standard Distances (As Measured from the Offgas Stack) (χ/q), sec/m^3

	Miles						
Sector*	4.3	4.4	4.5	4.6	4.7	4.8	4.9
N	1.01E-07	9.83E-08	9.37E-08	9.14E-08	8.97E-08	8.80E-08	8.61E-08
NNE	8.88E-08	8.71E-08	8.63E-08	8.42E-08	8.14E-08	8.00E-08	7.84E-08
NE	8.69E-08	8.53E-08	8.40E-08	8.25E-08	8.19E-08	8.02E-08	7.81E-08
ENE	8.42E-08	8.26E-08	8.09E-08	7.87E-08	7.69E-08	7.55E-08	7.38E-08
E	7.33E-08	7.27E-08	7.02E-08	6.85E-08	6.71E-08	6.56E-08	6.40E-08
ESE	8.27E-08	8.10E-08	7.40E-08	7.77E-08	7.61E-08	7.46E-08	7.32E-08
SE	9.71E-08	9.47E-08	9.24E-08	9.01E-08	8.78E-08	8.56E-08	8.18E-08
SSE	1.07E-07	1.02E-07	1.02E-07	9.90E-08	9.66E-08	9.41E-08	1.19E-07
S	1.06E-07	1.04E-07	1.02E-07	9.72E-08	9.63E-08	9.35E-08	9.03E-08
SSW	1.05E-07	1.03E-07	1.01E-07	9.78E-08	9.46E-08	9.20E-08	9.00E-08
SW	1.38E-07	1.37E-07	1.34E-07	1.30E-07	1.26E-07	1.24E-07	1.22E-07
WSW	1.31E-07	1.28E-07	1.28E-07	1.22E-07	1.20E-07	1.19E-07	1.18E-07
W	1.33E-07	1.28E-07	1.25E-07	1.24E-07	1.20E-07	1.17E-07	1.15E-07
WNW	1.43E-07	1.38E-07	1.35E-07	1.33E-07	1.33E-07	1.27E-07	1.25E-07
NW	1.14E-07	1.12E-07	1.11E-07	1.07E-07	1.04E-07	1.01E-07	9.74E-08
NNW	9.12E-08	8.89E-08	8.64E-08	8.31E-08	8.26E-08	8.08E-08	7.72E-08

Period of Record: 9-1-76 to 8-31-78

* Measured relevant to the Offgas Stack.

** Values less than the value for 0.4 miles.

*** See appropriate offgas stack long term elevated release values.

Table 10 Monticello Offgas Stack Dispersion Parameters for Short Term Elevated Releases ≤500 Hrs/Yr or ≤150 Hrs/Qtr (cont'd)

For Standard Distances (As Measured from the Offgas Stack) (χ/q), sec/m^3

Sector*	Miles 5.0
N	8.28E-08
NNE	7.56E-08
NE	7.58E-08
ENE	7.11E-08
E	6.33E-08
ESE	7.16E-08
SE	8.10E-08
SSE	1.11E-07
S	8.84E-08
SSW	8.80E-08
SW	1.19E-07
WSW	1.13E-07
W	1.13E-07
WNW	1.21E-07
NW	9.51E-08
NNW	7.53E-08

Period of Record: 9-1-76 to 8-31-78

* Measured relevant to the Offgas Stack.

** Values less than the value for 0.4 miles.

*** See appropriate offgas stack long term elevated release values.

Table 11 Monticello Offgas Stack Dispersion Parameters for Short Term Elevated Releases ≤500 HrsYr or ≤150 Hrs/Qtr

For Standard Distances (As Measured from the Offgas Stack) (D/q), m^{-2}

Miles

Sector*	0.1	0.2	0.3	0.4	0.5	0.6	0.7
N	**	**	**	1.32E-08	1.31E-08	9.45E-09	6.60E-09
NNE	**	**	**	2.39E-08	1.86E-08	1.39E-09	9.88E-09
NE	**	**	**	6.01E-09	7.80E-09	6.24E-09	4.92E-09
ENE	**	**	**	1.31E-08	1.14E-08	8.79E-09	6.20E-09
E	**	**	**	7.37E-09	9.17E-09	6.52E-09	4.58E-09
ESE	**	**	**	***	***	3.74E-09	5.28E-09
SE	**	**	**	***	***	***	6.26E-09
SSE	**	**	**	***	***	***	6.60E-09
S	**	**	**	***	***	4.41E-09	5.43E-09
SSW	**	**	**	***	***	3.39E-09	4.09E-09
SW	**	**	**	***	***	2.30E-09	3.34E-09
WSW	**	**	**	***	***	2.16E-09	3.17E-09
W	**	**	**	***	2.22E-09	3.38E-09	3.35E-09
WNW	**	**	**	***	2.55E-09	3.89E-09	3.94E-09
NW	**	**	**	***	***	3.17E-09	4.01E-09
NNW	**	**	**	2.13E-08	1.68E-08	1.30E-08	9.18E-09

Period of Record: 9-1-76 to 8-31-78

* Measured relevant to the Offgas Stack.

Table 11 Monticello Offgas Stack Dispersion Parameters for Short Term Elevated Releases ≤500 HrsYr or ≤150 Hrs/Qtr (cont'd)

For Standard Distances (As Measured from the Offgas Stack) (D/q), m^{-2}

Miles

Sector*	0.8	0.9	1.0	1.1	1.2	1.3	1.4
N	7.46E-09	7.64E-09	7.08E-09	5.61E-09	5.20E-09	4.30E-09	4.21E-09
NNE	9.52E-09	9.50E-09	8.74E-09	7.97E-09	6.49E-09	5.28E-09	5.05E-09
NE	5.32E-09	5.92E-09	5.43E-09	4.98E-09	4.43E-09	3.60E-09	3.11E-09
ENE	6.00E-09	5.94E-09	5.01E-09	4.56E-09	4.25E-09	3.75E-09	3.31E-09
E	5.18E-09	5.40E-09	4.74E-09	4.36E-09	3.76E-09	3.08E-09	3.09E-09
ESE	6.16E-09	6.58E-09	5.98E-09	4.72E-09	4.30E-09	3.89E-09	3.66E-09
SE	7.39E-09	7.99E-09	7.50E-09	6.40E-09	5.96E-09	5.50E-09	6.04E-09
SSE	7.58E-09	8.26E-09	7.59E-09	6.02E-09	6.29E-09	5.79E-09	6.12E-09
S	6.46E-09	6.88E-09	6.53E-09	5.17E-09	4.89E-09	4.19E-09	5.08E-09
SSW	4.90E-09	4.99E-09	4.71E-09	4.17E-09	3.58E-09	3.12E-09	3.17E-09
SW	5.67E-09	4.25E-09	3.97E-09	3.65E-09	3.03E-09	2.74E-09	3.65E-09
WSW	3.83E-09	4.16E-09	3.58E-09	3.23E-09	3.12E-09	2.66E-09	3.64E-09
W	4.14E-09	4.59E-09	4.35E-09	3.87E-09	3.59E-09	3.20E-09	3.87E-09
WNW	4.86E-09	5.37E-09	5.09E-09	4.51E-09	4.10E-09	3.77E-09	4.44E-09
NW	4.75E-09	5.16E-09	5.03E-09	4.25E-09	3.55E-09	3.43E-09	3.86E-09
NNW	8.37E-09	8.39E-09	7.94E-09	7.09E-09	5.96E-09	4.82E-09	6.18E-09

Period of Record: 9-1-76 to 8-31-78

* Measured relevant to the Offgas Stack.

Table 11 Monticello Offgas Stack Dispersion Parameters for Short Term Elevated Releases ≤500 HrsYr or ≤150 Hrs/Qtr (cont'd)

For Standard Distances (As Measured from the Offgas Stack) (D/q), m^{-2}

Miles

Sector*	1.5	1.6	1.7	1.8	1.9	2.0	2.1
N	4.63E-09	3.13E-09	3.20E-09	2.90E-09	2.69E-09	2.48E-09	2.24E-09
NNE	5.50E-09	3.78E-09	4.02E-09	3.56E-09	3.27E-09	2.95E-09	2.66E-09
NE	3.10E-09	2.65E-09	2.28E-09	2.48E-09	2.27E-09	2.08E-09	1.85E-09
ENE	2.86E-09	2.40E-09	2.81E-09	2.31E-09	2.08E-09	1.91E-09	1.76E-09
E	2.73E-09	2.35E-09	2.05E-09	2.39E-09	2.18E-09	1.96E-09	1.81E-09
ESE	3.62E-09	3.20E-09	2.86E-09	***	2.38E-09	2.22E-09	2.10E-09
SE	4.68E-09	4.28E-09	3.67E-09	3.61E-09	3.49E-09	3.09E-09	2.75E-09
SSE	4.50E-09	3.93E-09	3.57E-09	3.70E-09	2.90E-09	2.79E-09	2.69E-09
S	3.59E-09	***	3.58E-09	3.34E-09	3.04E-09	2.74E-09	2.55E-09
SSW	2.73E-09	2.34E-09	2.81E-09	2.42E-09	2.17E-09	1.97E-09	1.80E-09
SW	2.32E-09	1.98E-09	1.72E-09	1.72E-09	1.72E-09	1.57E-09	1.40E-09
WSW	2.38E-09	2.07E-09	1.80E-09	1.77E-09	1.73E-09	1.58E-09	1.42E-09
W	2.70E-09	2.47E-09	2.47E-09	2.22E-09	1.92E-09	1.75E-09	1.57E-09
WNW	2.83E-09	2.38E-09	2.06E-09	2.02E-09	2.03E-09	1.84E-09	1.64E-09
NW	3.09E-09	2.70E-09	3.41E-09	2.94E-09	2.70E-09	2.35E-09	2.13E-09
NNW	4.19E-09	3.41E-09	3.09E-09	2.84E-09	2.74E-09	2.54E-09	2.33E-09

Period of Record: 9-1-76 to 8-31-78

* Measured relevant to the Offgas Stack.

*** See appropriate long term values.

Table 11 Monticello Offgas Stack Dispersion Parameters for Short Term Elevated Releases ≤500 HrsYr or ≤150 Hrs/Qtr (cont'd)

For Standard Distances (As Measured from the Offgas Stack) (D/q), m^{-2}

Miles

Sector*	2.2	2.3	2.4	2.5	2.6	2.7	2.8
N	2.04E-09	1.90E-09	1.75E-09	1.64E-09	1.53E-09	1.42E-09	1.27E-09
NNE	2.45E-09	2.25E-09	2.10E-09	1.95E-09	1.82E-09	1.73E-09	1.61E-09
NE	1.67E-09	1.51E-09	1.42E-09	1.30E-09	1.19E-09	1.11E-09	1.03E-09
ENE	1.61E-09	1.47E-09	1.38E-09	1.29E-09	1.18E-09	1.12E-09	1.04E-09
E	1.62E-09	1.51E-09	1.37E-09	1.30E-09	1.20E-09	1.12E-09	1.04E-09
ESE	1.99E-09	1.88E-09	1.78E-09	1.66E-09	1.55E-09	1.44E-09	1.34E-09
SE	2.89E-09	2.38E-09	2.24E-09	2.12E-09	1.97E-09	2.09E-09	1.97E-09
SSE	2.47E-09	2.24E-09	2.18E-09	2.01E-09	1.85E-09	1.72E-09	1.98E-09
S	2.06E-09	1.92E-09	1.80E-09	1.67E-09	1.54E-09	1.46E-09	1.64E-09
SSW	1.62E-09	1.64E-09	1.73E-09	1.57E-09	1.46E-09	1.37E-09	1.29E-09
SW	1.24E-09	1.27E-09	1.35E-09	1.40E-09	1.60E-09	1.48E-09	1.34E-09
WSW	1.24E-09	1.29E-09	1.26E-09	1.27E-09	1.35E-09	1.27E-09	1.42E-09
W	1.40E-09	1.40E-09	1.42E-09	1.47E-09	1.35E-09	1.27E-09	1.20E-09
WNW	1.43E-09	1.46E-09	1.48E-09	1.52E-09	1.68E-09	1.58E-09	1.44E-09
NW	1.93E-09	1.80E-09	1.67E-09	1.57E-09	1.45E-09	1.35E-09	1.25E-09
NNW	2.22E-09	2.09E-09	2.02E-09	1.85E-09	1.74E-09	1.58E-09	1.44E-09

Period of Record: 9-1-76 to 8-31-78

* Measured relevant to the Offgas Stack.

Table 11 Monticello Offgas Stack Dispersion Parameters for Short Term Elevated Releases ≤500 HrsYr or ≤150 Hrs/Qtr (cont'd)

For Standard Distances (As Measured from the Offgas Stack) (D/q), m^{-2}

Miles

Sector*	2.9	3.0	3.1	3.2	3.3	3.4	3.5
N	1.20E-09	1.15E-09	1.08E-09	1.03E-09	9.77E-10	9.22E-10	8.74E-10
NNE	1.47E-09	1.39E-09	1.31E-09	1.25E-09	1.17E-09	1.11E-09	1.06E-09
NE	9.37E-10	8.90E-10	8.37E-10	7.98E-10	7.54E-10	7.19E-10	6.82E10
ENE	9.64E-10	9.11E-10	8.65E-10	8.28E-10	7.85E-10	7.41E-10	7.09E-10
E	9.72E-10	9.18E-10	8.55E-10	8.15E-10	7.80E-10	7.63E-10	6.77E-10
ESE	1.26E-09	1.18E-09	1.09E-09	1.04E-09	9.85E-10	9.24E-10	9.01E-10
SE	1.58E-09	1.57E-09	1.56E-09	1.49E-09	1.40E-09	1.31E-09	1.23E-09
SSE	1.57E-09	1.55E-09	1.54E-09	1.52E-09	1.44E-09	1.36E-09	1.28E-09
S	1.56E-09	1.41E-09	1.29E-09	1.21E-09	1.10E-09	1.05E-09	1.01E-09
SSW	1.22E-09	1.12E-09	1.04E-09	9.83E-10	9.12E-10	8.63E-10	8.24E-10
SW	1.25E-09	1.11E-09	1.05E-09	9.69E-10	8.96E-10	8.36E-10	7.83E-10
WSW	1.31E-09	1.22E-09	1.13E-09	1.05E-09	9.80E-10	9.14E-10	8.49E-10
W	1.19E-09	1.09E-09	1.04E-09	9.69E-10	9.26E-10	8.75E-10	8.11E-10
WNW	1.31E-09	1.21E-09	1.12E-09	1.06E-09	9.78E-10	9.00E-10	8.43E-10
NW	1.23E-09	1.03E09	9.72E-10	9.26E-10	8.37E-10	7.94E-10	7.63E-10
NNW	1.35E-09	1.30E-09	1.25E-09	1.17E-09	1.11E-09	1.06E-09	1.44E-09

Period of Record: 9-1-76 to 8-31-78

* Measured relevant to the Offgas Stack.

Table 11 Monticello Offgas Stack Dispersion Parameters for Short Term Elevated Releases ≤500 HrsYr or ≤150 Hrs/Qtr (cont'd)

For Standard Distances (As Measured from the Offgas Stack) (D/q), m^{-2}

Miles

Sector*	3.6	3.7	3.8	3.9	4.0	4.1	4.2
N	8.20E-10	7.85E-10	7.57E-10	7.26E-10	6.90E-10	6.64E-10	6.42E-10
NNE	1.01E-09	9.76E-10	9.14E-10	8.72E-10	8.35E-10	7.98E-10	7.55E-10
NE	6.45E-10	6.15E-10	5.85E-10	5.60E-10	5.22E-10	4.99E-10	4.77E-10
ENE	6.83E-10	6.52E-10	6.06E-10	5.79E-10	5.51E-10	5.22E-10	5.00E-10
E	6.49E-10	6.16E-10	5.77E-10	5.51E-10	5.25E-10	5.05E-10	4.85E-10
ESE	8.60E-10	8.21E-10	7.64E-10	7.41E-10	7.16E-10	6.91E-10	6.61E-10
SE	1.16E-09	1.10E-09	1.08E-09	1.02E-09	9.68E-10	9.93E-10	9.48E-10
SSE	1.21E-09	1.15E-09	1.08E-09	1.02E-09	1.04E-09	9.94E-10	9.52E-10
S	9.44E-10	9.15E-10	8.76E-10	8.65E-10	8.63E-10	8.23E-10	7.95E-10
SSW	7.76E-10	7.35E-10	6.96E-10	6.69E-10	6.35E-10	6.08E-10	5.70E-10
SW	7.42E-10	6.82E-10	6.45E-10	6.21E-10	5.90E-10	5.64E-10	5.37E-10
WSW	7.90E-10	7.45E-10	7.21E-10	6.88E-10	6.21E-10	5.94E-10	5.78E-10
W	7.69E-10	7.29E-10	6.93E-10	6.50E-10	6.08E-10	5.83E-10	5.56E-10
WNW	8.16E-10	7.73E-10	7.41E-10	7.05E-10	6.72E-10	6.38E-10	6.11E-10
NW	7.24E-10	6.75E-10	6.45E-10	6.43E-10	6.48E-10	6.19E-10	5.95E-10
NNW	9.60E-10	9.10E-10	8.53E-10	8.18E-10	7.82E-10	7.49E-10	7.22E-10

Period of Record: 9-1-76 to 8-31-78

* Measured relevant to the Offgas Stack.

Table 11 Monticello Offgas Stack Dispersion Parameters for Short Term Elevated Releases ≤500 HrsYr or ≤150 Hrs/Qtr (cont'd)

For Standard Distances (As Measured from the Offgas Stack) (D/q), m^{-2}

	Miles						
Sector*	4.3	4.4	4.5	4.6	4.7	4.8	4.9
N	6.07E-10	5.80E-10	5.43E-10	5.20E-10	5.01E-10	4.83E-10	4.65E-10
NNE	7.27E-10	7.00E-10	6.81E-10	6.52E-10	6.20E-10	5.98E-10	5.76E-10
NE	4.61E-10	4.42E-10	4.27E-10	4.10E-10	3.99E-10	3.83E-10	3.66E-10
ENE	4.81E-10	4.63E-10	4.45E-10	4.24E-10	4.07E-10	3.92E-10	3.76E-10
E	4.55E-10	4.43E-10	4.19E-10	4.02E-10	3.86E-10	3.71E-10	3.55E-10
ESE	6.34E-10	6.06E-10	5.45E-10	5.59E-10	5.39E-10	5.19E-10	4.97E-10
SE	9.05E-10	8.70E-10	8.33E-10	8.01E-10	7.69E-10	7.38E-10	6.94E-10
SSE	9.43E-10	8.59E-10	8.39E-10	8.03E-10	7.73E-10	7.40E-10	9.18E-10
S	7.75E-10	7.42E-10	7.10E-10	6.65E-10	6.49E-10	6.21E-10	5.91E-10
SSW	5.39E-10	5.15E-10	4.91E-10	4.69E-10	4.47E-10	4.28E-10	4.13E-10
SW	5.23E-10	5.02E-10	4.74E-10	4.53E-10	4.35E-10	4.22E-10	4.08E-10
WSW	5.46E-10	5.16E-10	4.98E-10	4.69E-10	4.55E-10	4.45E-10	4.34E-10
W	5.35E-10	5.09E-10	4.89E-10	4.77E-10	4.53E-10	4.36E-10	4.20E-10
WNW	5.91E-10	5.61E-10	5.41E-10	5.24E-10	5.16E-10	4.87E-10	4.69E-10
NW	5.88E-10	5.66E-10	5.44E-10	5.17E-10	4.96E-10	4.72E-10	4.48E-10
NNW	6.90E-10	6.60E-10	6.30E-10	5.96E-10	5.83E-10	5.61E-10	5.28E-10

Period of Record: 9-1-76 to 8-31-78

* Measured relevant to the Offgas Stack.

Table 11 Monticello Offgas Stack Dispersion Parameters for Short Term Elevated Releases ≤500 HrsYr or ≤150 Hrs/Qtr (cont'd)

For Standard Distances (As Measured from the Offgas Stack) (D/q), m^{-2}

Sector*	Miles 5.0
N	4.39E-10
NNE	5.46E-10
NE	3.48E-10
ENE	3.56E-10
E	3.45E-10
ESE	4.80E-10
SE	6.78E-10
SSE	8.45E-10
S	5.70E-10
SSW	3.98E-10
SW	3.92E-10
WSW	4.12E-10
W	4.05E-10
WNW	4.48E-10
NW	4.31E-10
NNW	5.06E-10

Period of Record: 9-1-76 to 8-31-78

* Measured relevant to the Offgas Stack.

Table 12 Monticello Reactor Building Vent Dispersion Parameters for Short Term Elevated Releases ≤500 Hrs/Yr or ≤150 Hrs/Qtr

Sector*	Distance Miles	Distance Meters	χ/q (sec/m)^3 No Decay Undepleted	D/q (m^{-2})
N	0.51	821.	5.18E-06	7.19E-08
NNE	0.58	933.	3.51E-06	5.02E-08
NE	0.65	1046.	2.33E-06	2.93E-08
ENE	0.83	1336.	1.82E-06	1.69E-08
E	0.59	950.	3.67E-06	3.90E-08
ESE	0.59	950.	4.95E-06	6.51E-08
SE	0.61	982.	4.96E-06	6.49E-08
SSE	0.43	692.	8.06E-06	1.18E-07
S	0.34	547.	6.92E-06	9.30E-08
SSW	0.32	515.	5.92E-06	7.04E-08
SW	0.32	515.	6.31E-06	8.24E-08
WSW	0.35	563.	4.91E-06	5.50E-08
W	0.48	772.	3.38E-06	3.82E-08
WNW	0.68	1094.	2.94E-06	2.88E-08
NW	0.43	692.	5.70E-06	7.09E-08
NNW	0.53	853.	4.44E-06	6.09E-08

Period of Record: 9-1-76 to 8-31-78

* Measured relevant to the Reactor Vent.

Table 13 Reactor Building Vent Dispersion Parameters for Short Term Elevated Releases ≤500 Hrs/Yr or ≤150 Hrs/Qtr

For Standard Distances (As Measured from the Offgas Stack) (χ/q), sec/m^3

Miles

Sector*	0.1	0.2	0.3	0.4	0.5	0.6	0.7
N	7.30E-05	2.19E-05	1.10E-05	7.14E-06	5.28E-06	4.19E-06	3.46E-06
NNE	5.81E-05	1.77E-05	8.96E-06	5.84E-06	4.23E-06	3.34E-06	2.79E-06
NE	4.26E-05	1.29E-05	6.69E-06	4.33E-06	3.19E-06	2.54E-06	2.16E-06
ENE	4.27E-05	1.29E-05	6.65E-06	4.32E-06	3.15E-06	2.53E-06	2.16E-06
E	5.76E-05	1.73E-05	9.22E-06	6.20E-06	4.51E-06	3.63E-06	3.04E-06
ESE	7.80E-05	2.30E-05	1.24E-05	8.28E-06	6.16E-06	4.84E-06	4.01E-06
SE	8.52E-05	2.48E-05	1.31E-05	8.85E-06	6.46E-06	5.08E-06	4.18E-06
SSE	8.87E-05	2.60E-05	1.36E-05	8.91E-06	6.53E-06	5.15E-06	4.22E-06
S	4.89E-05	1.47E-05	7.95E-06	5.35E-06	3.95E-06	3.17E-06	2.63E-06
SSW	4.04E-05	1.19E-05	6.58E-06	4.38E-06	3.34E-06	2.80E-06	2.46E-06
SW	4.37E-05	1.34E-05	7.26E-06	4.76E-06	3.62E-06	2.97E-06	2.62E-06
WSW	3.65E-05	1.09E-05	6.13E-06	4.11E-06	3.17E-06	2.70E-06	2.43E-06
W	4.07E-05	1.23E-05	6.47E-06	4.32E-06	3.19E-06	2.67E-06	2.35E-06
WNW	5.53E-05	1.65E-05	8.74E-06	5.74E-06	4.22E-06	3.37E-06	2.85E-06
NW	6.25E-05	1.85E-05	9.62E-06	6.32E-06	4.65E-06	3.76E-06	3.15E-06
NNW	7.11E-05	2.11E-05	1.04E-05	6.70E-06	4.78E-06	3.76E-06	3.15E-06

Period of Record: 9-1-76 to 8-31-78

* Measured relevant to the Reactor Vent.

Table 13 Reactor Building Vent Dispersion Parameters for Short Term Elevated Releases ≤500 Hrs/Yr or ≤150 Hrs/Qtr (cont'd)

For Standard Distances (As Measured from the Offgas Stack) (χ/q), sec/m^3

Miles

Sector*	0.8	0.9	1.0	1.1	1.2	1.3	1.4
N	2.84E-06	2.43E-06	2.05E-06	1.79E-06	1.61E-06	1.46E-06	1.31E-06
NNE	2.33E-06	2.02E-06	1.71E-06	1.51E-06	1.37E-06	1.24E-06	1.12E-06
NE	1.83E-06	1.58E-06	1.37E-06	1.21E-06	1.11E-06	9.99E-06	9.23E-06
ENE	1.87E-06	1.64E-06	1.46E-06	1.31E-06	1.20E-06	1.11E-06	1.04E-06
E	2.51E-06	2.18E-06	1.87E-06	1.64E-06	1.50E-06	1.38E-06	1.26E-06
ESE	3.34E-06	2.77E-06	2.38E-06	2.07E-06	1.80E-06	1.59E-06	1.44E-06
SE	3.42E-06	2.82E-06	2.39E-06	2.07E-06	1.78E-06	1.57E-06	1.40E-06
SSE	3.47E-06	2.89E-06	2.43E-06	2.12E-06	1.86E-06	1.64E-06	1.47E-06
S	2.27E-06	1.96E-06	1.70E-06	1.51E-06	1.38E-06	1.27E-06	1.15E-06
SSW	2.18E-06	1.93E-06	1.74E-06	1.52E-06	1.48E-06	1.33E-06	1.21E-06
SW	2.26E-06	1.99E-06	1.81E-06	1.58E-06	1.44E-06	1.32E-06	1.21E-06
WSW	2.18E-06	1.94E-06	1.82E-06	1.63E-06	1.48E-06	1.39E-06	1.29E-06
W	2.07E-06	1.87E-06	1.67E-06	1.52E-06	1.41E-06	1.29E-06	1.19E-06
WNW	2.47E-06	2.15E-06	1.86E-06	1.68E-06	1.52E-06	1.37E-06	1.26E-06
NW	2.60E-06	2.22E-06	1.89E-06	1.64E-06	1.49E-06	1.34E-06	1.22E-06
NNW	2.64E-06	2.25E-06	1.90E-06	1.68E-06	1.50E-06	1.37E-06	1.25E-06

Period of Record: 9-1-76 to 8-31-78

* Measured relevant to the Reactor Vent.

Table 13 Reactor Building Vent Dispersion Parameters for Short Term Elevated Releases ≤500 Hrs/Yr or ≤150 Hrs/Qtr (cont'd)

For Standard Distances (As Measured from the Offgas Stack) (χ/q), sec/m^3

Miles

Sector*	1.5	1.6	1.7	1.8	1.9	2.0	2.1
N	1.28E-06	1.15E-06	1.05E-06	9.60E-07	9.00E-07	8.28E-07	7.67E-07
NNE	1.11E-06	9.94E-07	9.14E-07	8.44E-07	7.91E-07	7.31E-07	6.94E-07
NE	8.63E-07	7.69E-07	7.26E-07	7.09E-07	6.71E-07	6.31E-07	6.08E-07
ENE	9.50E-07	9.08E-07	8.65E-07	8.22E-07	7.80E-07	7.31E-07	7.00E-07
E	1.15E-06	1.06E-06	1.02E-06	9.40E-07	8.72E-07	8.20E-07	7.72E-07
ESE	1.31E-06	1.16E-06	1.07E-06	1.03E-06	9.41E-07	8.73E-07	8.08E-07
SE	1.26E-06	1.15E-06	1.06E-06	1.01E-06	9.48E-07	8.74E-07	8.19E-07
SSE	1.33E-06	1.17E-06	1.09E-06	1.05E-06	9.69E-07	9.01E-07	8.34E-07
S	1.13E-06	1.00E-06	9.21E-07	8.55E-07	7.94E-07	7.33E-07	6.96E-07
SSW	1.19E-06	1.12E-06	1.08E-06	1.04E-06	1.02E-06	1.02E-06	9.95E-07
SW	1.18E-06	1.09E-06	1.06E-06	1.01E-06	9.62E-07	9.53E-07	9.34E-07
WSW	1.27E-06	1.21E-06	1.16E-06	1.09E-06	1.05E-06	1.04E-06	1.02E-06
W	1.19E-06	1.12E-06	1.06E-06	1.02E-06	1.01E-06	9.95E-07	9.91E-07
WNW	1.25E-06	1.16E-06	1.11E-06	1.06E-06	1.02E-06	1.01E-06	9.90E-07
NW	1.09E-06	9.91E-07	9.57E-07	8.87E-07	8.18E-07	7.65E-07	7.25E-07
NNW	1.24E-06	1.12E-06	1.03E-06	9.46E-07	8.85E-07	8.17E-07	7.74E-07

Period of Record: 9-1-76 to 8-31-78

* Measured relevant to the Reactor Vent.

Table 13 Reactor Building Vent Dispersion Parameters for Short Term Elevated Releases ≤500 Hrs/Yr or ≤150 Hrs/Qtr (cont'd)

For Standard Distances (As Measured from the Offgas Stack) (χ/q), sec/m^3

Miles

Sector*	2.2	2.3	2.4	2.5	2.6	2.7	2.8
N	7.21E-07	6.79E-07	6.38E-07	6.10E-07	5.92E-07	5.77E-07	5.62E-07
NNE	6.47E-07	6.14E-07	5.79E-07	5.45E-07	5.26E-07	4.99E-07	4.80E-07
NE	5.81E-07	5.55E-07	5.23E-07	5.11E-07	4.86E-07	4.63E-07	4.47E-07
ENE	6.68E-07	6.41E-07	6.10E-07	5.90E-07	5.62E-07	5.41E-07	5.22E-07
E	7.25E-07	6.92E-07	6.51E-07	6.19E-07	5.74E-07	5.53E-07	5.35E-07
ESE	7.53E-07	7.07E-07	6.62E-07	6.25E-07	5.91E-07	5.56E-07	5.28E-07
SE	7.76E-07	7.36E-07	7.02E-07	6.75E-07	6.37E-07	6.04E-07	5.74E-07
SSE	7.74E-07	7.28E-07	6.87E-07	6.46E-07	6.10E-07	5.77E-07	5.51E-07
S	6.44E-07	6.08E-07	5.80E-07	5.54E-07	5.40E-07	5.25E-07	5.14E-07
SSW	9.71E-07	9.89E-07	9.88E-07	9.58E-07	9.03E-07	8.47E-07	8.10E-07
SW	9.09E-07	9.03E-07	8.97E-07	8.65E-07	8.24E-07	7.90E-07	7.65E-07
WSW	9.86E-07	9.81E-07	9.76E-07	9.48E-07	8.87E-07	8.35E-07	7.92E-07
W	9.66E-07	9.80E-07	9.78E-07	9.56E-07	9.12E-07	8.87E-07	8.66E-07
WNW	9.90E-07	9.88E-07	9.97E-07	9.75E-07	9.54E-07	9.43E-07	9.29E-07
NW	6.91E-07	6.47E-07	6.07E-07	5.89E-07	5.72E-07	5.60E-07	5.51E-07
NNW	7.27E-07	6.76E-07	6.47E-07	6.28E-07	5.95E-07	5.74E-07	5.52E-07

Period of Record: 9-1-76 to 8-31-78

* Measured relevant to the Reactor Vent.

Table 13 Reactor Building Vent Dispersion Parameters for Short Term Elevated Releases ≤500 Hrs/Yr or ≤150 Hrs/Qtr (cont'd)

For Standard Distances (As Measured from the Offgas Stack) (χ/q), sec/m³

Miles

Sector*	2.9	3.0	3.1	3.2	3.3	3.4	3.5
N	5.48E-07	5.29E-07	5.16E-07	5.02E-07	4.91E-07	4.99E-07	4.82E-07
NNE	4.65E-07	4.49E-07	4.30E-07	4.15E-07	3.98E-07	3.83E-07	3.71E-07
NE	4.31E-07	4.13E-07	3.96E-07	3.82E-07	3.66E-07	3.51E-07	3.39E-07
ENE	5.06E-07	4.87E-07	4.64E-07	4.52E-07	4.36E-07	4.25E-07	4.14E-07
E	5.13E-07	5.00E-07	4.80E-07	4.62E-07	4.45E-07	4.27E-07	4.09E-07
ESE	5.01E-07	4.74E-07	4.57E-07	4.36E-07	4.15E-07	3.99E-07	3.83E-07
SE	5.51E-07	5.28E-07	5.05E-07	4.78E-07	4.55E-07	4.35E-07	4.16E-07
SSE	5.27E-07	5.06E-07	4.85E-07	4.59E-07	4.44E-07	4.26E-07	4.10E-07
S	5.03E-07	4.91E-07	5.05E-07	4.93E-07	4.96E-07	4.76E-07	4.67E-07
SSW	7.70E-07	7.34E-07	7.03E-07	6.76E-07	6.48E-07	6.25E-07	5.97E-07
SW	7.38E-07	7.09E-07	6.87E-07	6.61E-07	6.43E-07	6.16E-07	5.94E-07
WSW	7.52E-07	7.13E-07	6.84E-07	6.52E-07	6.24E-07	6.02E-07	5.73E-07
W	8.43E-07	8.16E-07	7.91E-07	7.64E-07	7.44E-07	7.09E-07	6.90E-07
WNW	9.07E-07	8.94E-07	8.62E-07	8.44E-07	8.18E-07	8.00E-07	7.84E-07
NW	5.34E-07	5.22E-07	5.28E-07	5.15E-07	5.16E-07	5.04E-07	4.97E-07
NNW	5.28E-07	5.08E-07	4.93E-07	4.74E-07	4.55E-07	4.35E-07	4.20E-07

Period of Record: 9-1-76 to 8-31-78

* Measured relevant to the Reactor Vent.

Table 13 Reactor Building Vent Dispersion Parameters for Short Term Elevated Releases ≤500 Hrs/Yr or ≤150 Hrs/Qtr (cont'd)

For Standard Distances (As Measured from the Offgas Stack) (χ/q), sec/m³

Miles

Sector*	3.6	3.7	3.8	3.9	4.0	4.1	4.2
N	4.65E-07	4.49E-07	4.32E-07	4.19E-07	4.06E-07	3.95E-07	3.83E-07
NNE	3.58E-07	3.47E-07	3.37E-07	3.25E-07	3.16E-07	3.18E-07	3.08E-07
NE	3.29E-07	3.18E-07	3.10E-07	3.01E-07	2.93E-07	2.90E-07	2.77E-07
ENE	4.02E-07	3.90E-07	3.80E-07	3.72E-07	3.60E-07	3.55E-07	3.46E-07
E	3.97E-07	3.83E-07	3.72E-07	3.74E-07	3.66E-07	3.55E-07	3.44E-07
ESE	3.71E-07	3.57E-07	3.42E-07	3.37E-07	3.28E-07	3.17E-07	3.06E-07
SE	4.01E-07	3.86E-07	3.70E-07	3.61E-07	3.48E-07	3.44E-07	3.42E-07
SSE	3.92E-07	3.78E-07	3.68E-07	3.66E-07	3.52E-07	3.41E-07	3.29E-07
S	4.49E-07	4.43E-07	4.36E-07	4.29E-07	4.22E-07	4.16E-07	4.12E-07
SSW	5.79E-07	5.58E-07	5.49E-07	5.38E-07	5.25E-07	5.14E-07	5.02E-07
SW	5.80E-07	5.64E-07	5.48E-07	5.28E-07	5.15E-07	5.04E-07	4.94E-07
WSW	5.61E-07	5.59E-07	5.50E-07	5.35E-07	5.23E-07	5.13E-07	4.90E-07
W	6.66E-07	6.40E-07	6.16E-07	5.94E-07	5.73E-07	5.54E-07	5.36E-07
WNW	7.52E-07	7.22E-07	6.90E-07	6.65E-07	6.37E-07	6.19E-07	5.97E-07
NW	4.79E-07	4.71E-07	4.66E-07	4.57E-07	4.49E-07	4.41E-07	4.38E-07
NNW	4.07E-07	3.95E-07	3.86E-07	3.72E-07	3.68E-07	3.57E-07	3.51E-07

Period of Record: 9-1-76 to 8-31-78

* Measured relevant to the Reactor Vent.

Table 13 Reactor Building Vent Dispersion Parameters for Short Term Elevated Releases ≤500 Hrs/Yr or ≤150 Hrs/Qtr (cont'd)

For Standard Distances (As Measured from the Offgas Stack) (χ/q), sec/m³

Miles

Sector*	4.3	4.4	4.5	4.6	4.7	4.8	4.9
N	3.65E-07	3.55E-07	3.41E-07	3.33E-07	3.25E-07	3.20E-07	3.12E-07
NNE	3.08E-07	3.00E-07	2.85E-07	2.79E-07	2.72E-07	2.66E-07	2.59E-07
NE	2.79E-07	2.69E-07	2.53E-07	2.53E-07	2.48E-07	2.41E-07	2.36E-07
ENE	3.36E-07	3.29E-07	3.12E-07	3.07E-07	3.00E-07	2.98E-07	2.91E-07
E	3.37E-07	3.28E-07	3.19E-07	3.11E-07	3.02E-07	2.95E-07	2.85E-07
ESE	2.98E-07	2.89E-07	2.80E-07	2.71E-07	2.63E-07	2.56E-07	2.48E-07
SE	3.32E-07	3.20E-07	3.10E-07	3.01E-07	2.92E-07	2.83E-07	2.75E-07
SSE	3.21E-07	3.11E-07	3.02E-07	2.92E-07	2.84E-07	2.75E-07	2.68E-07
S	4.03E-07	3.94E-07	3.87E-07	3.76E-07	3.65E-07	3.53E-07	3.43E-07
SSW	4.92E-07	4.81E-07	4.71E-07	4.57E-07	4.39E-07	4.26E-07	4.11E-07
SW	4.84E-07	4.79E-07	4.69E-07	4.54E-07	4.39E-07	4.25E-07	4.12E-07
WSW	4.89E-07	4.77E-07	4.66E-07	4.50E-07	4.35E-07	4.24E-07	4.11E-07
W	5.19E-07	5.03E-07	4.87E-07	4.73E-07	4.56E-07	4.43E-07	4.25E-07
WNW	5.78E-07	5.59E-07	5.41E-07	5.25E-07	5.09E-07	4.92E-07	4.78E-07
NW	4.29E-07	4.20E-07	4.11E-07	4.00E-07	3.88E-07	3.77E-07	3.66E-07
NNW	3.45E-07	3.32E-07	3.22E-07	3.15E-07	3.07E-07	2.98E-07	2.91E-07

Period of Record: 9-1-76 to 8-31-78

* Measured relevant to the Reactor Vent.

Table 13 Reactor Building Vent Dispersion Parameters for Short Term Elevated Releases ≤500 Hrs/Yr or ≤150 Hrs/Qtr (cont'd)

For Standard Distances (As Measured from the Offgas Stack) (χ/q), sec/m^3

Sector*	Miles 5.0
N	3.03E-07
NNE	2.52E-07
NE	2.30E-07
ENE	2.84E-07
E	2.82E-07
ESE	2.41E-07
SE	2.67E-07
SSE	2.62E-07
S	4.67E-07
SSW	4.00E-07
SW	3.99E-07
WSW	3.99E-07
W	4.12E-07
WNW	4.66E-07
NW	3.52E-07
NNW	2.78E-07

Period of Record: 9-1-76 to 8-31-78

* Measured relevant to the Reactor Vent.

Table 14 Reactor Building Vent Dispersion Parameters for Short Term Elevated Releases ≤500 Hrs/Yr or ≤150 Hrs/Qtr

For Standard Distances (As Measured from the Offgas Stack) (D/q), m^{-2}

Miles

Sector*	0.1	0.2	0.3	0.4	0.5	0.6	0.7
N	6.91E-07	2.69E-07	1.52E-07	1.01E-07	7.36E-08	5.53E-08	4.28E-08
NNE	5.55E-07	2.24E-07	1.30E-07	8.81E-08	6.33E-08	4.71E-08	3.65E-08
NE	3.90E-07	1.58E-07	9.37E-08	6.24E-08	4.48E-08	3.32E-08	2.59E-08
ENE	3.50E-07	1.43E-07	8.49E-08	5.71E-08	4.08E-08	3.02E-08	2.33E-08
E	4.63E-07	1.86E-07	1.10E-07	7.39E-08	5.16E-08	3.82E-08	2.91E-08
ESE	8.49E-07	3.27E-07	1.86E-07	1.21E-07	8.62E-08	6.33E-08	4.88E-08
SE	9.41E-07	3.56E-07	1.96E-07	1.29E-07	9.01E-08	6.69E-08	5.19E-08
SSE	9.60E-07	3.67E-07	2.02E-07	1.32E-07	9.36E-08	6.99E-08	5.40E-08
S	4.50E-07	1.79E-07	1.06E-07	7.18E-08	5.11E-08	3.80E-08	2.88E-08
SSW	3.27E-07	1.30E-07	7.81E-08	5.13E-08	3.67E-08	2.75E-08	2.15E-08
SW	4.13E-07	1.67E-07	9.51E-08	6.02E-08	4.24E-08	3.12E-08	2.46E-08
WSW	2.82E-07	1.14E-07	6.90E-08	4.53E-08	3.27E-08	2.46E-08	1.94E-08
W	3.06E-07	1.25E-07	7.41E-08	5.02E-08	3.55E-08	2.68E-08	2.10E-08
WNW	4.25E-07	1.69E-07	9.89E-08	6.61E-08	4.73E-08	3.52E-08	2.73E-08
NW	5.40E-07	2.12E-07	1.21E-07	7.91E-08	5.61E-08	4.23E-08	3.28E-08
NNW	6.42E-07	2.53E-07	1.42E-07	9.39E-08	6.65E-08	4.95E-08	3.87E-08

Period of Record: 9-1-76 to 8-31-78

* Measured relevant to the Offgas Stack.

Table 14 Reactor Building Vent Dispersion Parameters for Short Term Elevated Releases ≤500 Hrs/Yr or ≤150 Hrs/Qtr (cont'd)

For Standard Distances (As Measured from the Offgas Stack) (D/q), m^{-2}

Miles

Sector*	0.8	0.9	1.0	1.1	1.2	1.3	1.4
N	3.25E-08	2.57E-08	1.99E-08	1.61E-08	1.34E-08	1.13E-08	9.77E-09
NNE	2.79E-08	2.22E-08	1.71E-08	1.39E-08	1.16E-08	9.77E-09	8.45E-09
NE	1.99E-08	1.56E-08	1.23E-08	1.00E-08	8.52E-09	7.15E-09	6.20E-09
ENE	1.80E-08	1.41E-08	1.12E-08	9.11E-09	7.57E-09	6.45E-09	5.55E09
E	2.17E-08	1.70E-08	1.33E-08	1.07E-08	9.01E-09	7.69E-09	6.56E-09
ESE	3.78E-08	2.92E-08	2.35E-08	1.93E-08	1.59E-08	1.34E-08	1.16E-08
SE	3.99E-08	3.10E-08	2.48E-08	2.04E-08	1.67E-08	1.40E-08	1.20E-08
SSE	4.16E-08	3.26E-08	2.57E-08	2.12E-08	1.76E-08	1.48E-08	1.27E-08
S	2.26E-08	1.78E-08	1.41E-08	1.16E-08	9.75E-09	8.85E-09	7.48E-09
SSW	1.69E-08	1.34E-08	1.10E-08	9.02E-09	7.60E-09	6.52E-09	5.84E-09
SW	1.89E-08	1.51E-08	1.25E-08	1.01E-08	8.52E-09	7.27E-09	6.61E-09
WSW	1.52E-08	1.20E-08	1.01E-08	8.20E-09	6.85E-09	5.94E-09	5.35E-09
W	1.62E-08	1.31E-08	1.04E-08	8.64E-09	7.29E-09	6.19E-09	5.49E-09
WNW	2.16E-08	1.72E-08	1.36E-08	1.12E-08	9.47E-09	7.95E-09	7.18E-09
NW	2.49E-08	1.97E-08	1.55E-08	1.26E-08	1.07E-08	9.05E-09	7.82E-09
NNW	3.00E-08	2.36E-08	1.82E-08	1.49E-08	1.22E-08	1.05E-08	9.21E-09

Period of Record: 9-1-76 to 8-31-78

* Measured relevant to the Offgas Stack.

Table 14 Reactor Building Vent Dispersion Parameters for Short Term Elevated Releases ≤500 Hrs/Yr or ≤150 Hrs/Qtr (cont'd)

For Standard Distances (As Measured from the Offgas Stack) (D/q), m^{-2}

Miles

Sector*	1.5	1.6	1.7	1.8	1.9	2.0	2.1
N	8.90E-09	7.61E-09	6.62E-09	5.81E-09	5.23E-09	4.63E-09	4.13E-09
NNE	7.75E-09	6.61E-09	5.79E-09	5.10E-09	4.56E-09	4.07E-09	3.71E-09
NE	5.46E-09	4.54E-09	4.02E-09	3.69E-09	3.30E-09	2.93E-09	2.48E-09
ENE	4.71E-09	4.19E-09	3.73E-09	3.33E-09	2.98E-09	2.64E-09	2.40E-09
E	5.63E-09	4.93E-09	4.49E-09	3.96E-09	3.53E-09	3.18E-09	2.88E-09
ESE	1.01E-08	8.60E-09	7.60E-09	7.07E-09	6.28E-09	5.64E-09	5.07E-09
SE	1.03E-08	9.00E-09	7.94E-09	7.17E-09	6.48E-09	5.74E-09	5.17E-09
SSE	1.10E-08	9.30E-09	8.32E-09	7.72E-09	6.89E-09	6.20E-09	5.56E-09
S	6.89E-09	5.81E-09	5.11E-09	4.54E-09	4.06E-09	3.61E-09	3.30E-09
SSW	5.34E-09	4.70E-09	4.14E-09	3.63E-09	3.26E-09	3.21E-09	2.88E-09
SW	6.60E-09	5.31E-09	4.72E-09	4.14E-09	3.66E-09	3.56E-09	3.24E-09
WSW	4.91E-09	4.44E-09	3.92E-09	3.40E-09	3.03E-09	3.03E-09	2.76E-09
W	5.07E-09	4.44E-09	3.82E-09	3.36E-09	3.07E-09	2.96E-09	2.71E-09
WNW	6.67E-09	5.78E-09	5.06E-09	4.43E-09	3.92E-09	3.71E-09	3.34E-09
NW	6.67E-09	5.73E-09	5.26E-09	4.65E-09	4.11E-09	3.68E-09	3.35E-09
NNW	8.53E-09	7.30E-09	6.36E-09	5.58E-09	5.00E-09	4.42E-09	4.03E-09

Period of Record: 9-1-76 to 8-31-78

* Measured relevant to the Offgas Stack.

Table 14 Reactor Building Vent Dispersion Parameters for Short Term Elevated Releases ≤500 Hrs/Yr or ≤150 Hrs/Qtr (cont'd)

For Standard Distances (As Measured from the Offgas Stack) (D/q), m^{-2}

Miles

Sector*	2.2	2.3	2.4	2.5	2.6	2.7	2.8
N	3.75E-09	3.42E-09	3.11E-09	2.88E-09	2.68E-09	2.53E-09	2.38E-09
NNE	3.34E-09	3.06E-09	2.79E-09	2.55E-09	2.38E-09	2.20E-09	2.06E-09
NE	2.43E-09	2.21E-09	2.02E-09	1.89E-09	1.74E-09	1.61E-09	1.51E-09
ENE	2.18E-09	2.03E-09	1.85E-09	1.70E-09	1.57E-09	1.46E-09	1.36E-09
E	2.61E-09	2.41E-09	2.20E-09	2.02E-09	1.82E-09	1.71E-09	1.61E-09
ESE	4.60E-09	4.21E-09	3.84E-09	3.54E-09	3.28E-09	3.01E-09	2.80E-09
SE	4.71E-09	4.43E-09	4.07E-09	3.79E-09	3.49E-09	3.24E-09	3.02E-09
SSE	5.01E-09	4.58E-09	4.21E-09	3.86E-09	3.55E-09	3.28E-09	3.06E-09
S	2.95E-09	2.70E-09	2.50E-09	2.32E-09	2.15E-09	2.00E-09	1.86E-09
SSW	2.60E-09	2.45E-09	2.28E-09	2.06E-09	1.90E-09	1.75E-09	1.64E-09
SW	2.93E-09	2.72E-09	2.53E-09	2.29E-09	2.11E-09	1.96E-09	1.84E-09
WSW	2.48E-09	2.31E-09	2.16E-09	1.98E-09	1.81E-09	1.68E-09	1.56E-09
W	2.44E-09	2.29E-09	2.12E-09	1.93E-09	1.77E-09	1.66E-09	1.57E-09
WNW	3.09E-09	2.85E-09	2.67E-09	2.43E-09	2.25E-09	2.11E-09	1.98E-09
NW	3.06E-09	2.76E-09	2.58E-09	2.41E-09	2.25E-09	2.10E-09	1.98E-09
NNW	3.64E-09	3.26E-09	3.04E-09	2.85E-09	2.62E-09	2.45E-09	2.29E-09

Period of Record: 9-1-76 to 8-31-78

* Measured relevant to the Offgas Stack.

Table 14 Reactor Building Vent Dispersion Parameters for Short Term Elevated Releases ≤500 Hrs/Yr or ≤150 Hrs/Qtr (cont'd)

For Standard Distances (As Measured from the Offgas Stack) (D/q), m^{-2}

Miles

Sector*	2.9	3.0	3.1	3.2	3.3	3.4	3.5
N	2.23E-09	2.09E-09	1.96E-09	1.84E-09	1.74E-09	1.73E-09	1.63E-09
NNE	1.94E-09	1.82E-09	1.71E-09	1.61E-09	1.51E-09	1.42E-09	1.35E-09
NE	1.42E-09	1.33E-09	1.25E-09	1.17E-09	1.10E-09	1.03E-09	9.77E-10
ENE	1.28E-09	1.20E-09	1.11E-09	1.05E-09	9.92E-10	9.42E-10	8.97E-10
E	1.50E-09	1.43E-09	1.34E-09	1.26E-09	1.19E-09	1.11E-09	1.04E-10
ESE	2.60E-09	2.42E-09	2.29E-09	2.15E-09	2.00E-09	1.90E-09	1.79E-09
SE	2.84E-09	2.67E-09	2.50E-09	2.32E-09	2.18E-09	2.05E-09	1.93E-09
SSE	2.86E-09	2.69E-09	2.53E-09	2.34E-09	2.23E-09	2.10E-09	1.98E-09
S	1.74E-09	1.63E-09	1.64E-09	1.54E-09	1.48E-09	1.36E-09	1.29E-09
SSW	1.53E-09	1.44E-09	1.36E-09	1.29E-09	1.22E-09	1.16E-09	1.10E-09
SW	1.73E-09	1.61E-09	1.52E-09	1.43E-09	1.36E-09	1.27E-09	1.21E-09
WSW	1.46E-09	1.37E-09	1.29E-09	1.22E-09	1.15E-09	1.10E-09	1.04E-09
W	1.48E-09	1.40E-09	1.32E-09	1.24E-09	1.18E-09	1.10E-09	1.05E-09
WNW	1.84E-09	1.74E-09	1.61E-09	1.52E-09	1.42E-09	1.52E-09	1.56E-09
NW	1.83E-09	1.72E-09	1.67E-09	1.59E-09	1.53E-09	1.42E-09	1.36E-09
NNW	2.13E-09	2.01E-09	1.90E-09	1.79E-09	1.67E-09	1.57E-09	1.49E-09

Period of Record: 9-1-76 to 8-31-78

* Measured relevant to the Offgas Stack.

Table 14 Reactor Building Vent Dispersion Parameters for Short Term Elevated Releases ≤500 Hrs/Yr or ≤150 Hrs/Qtr (cont'd)

For Standard Distances (As Measured from the Offgas Stack) (D/q), m^{-2}

Miles

Sector*	3.6	3.7	3.8	3.9	4.0	4.1	4.2
N	1.55E-09	1.47E-09	1.40E-09	1.34E-09	1.29E-09	1.24E-09	1.20E-09
NNE	1.27E-09	1.21E-09	1.16E-09	1.09E-09	1.04E-09	1.03E-09	9.85E-10
NE	9.27E-10	8.82E-10	8.44E-10	8.04E-10	7.68E-10	7.48E-10	7.05E-10
ENE	8.50E-10	8.08E-10	7.71E-10	7.38E-10	7.01E-10	6.78E-10	6.48E-10
E	9.92E-10	9.39E-10	8.94E-10	8.83E-10	8.48E-10	8.09E-10	7.71E-10
ESE	1.71E-09	1.61E-09	1.53E-09	1.48E-09	1.42E-09	1.35E-09	1.29E-09
SE	1.83E-09	1.73E-09	1.64E-09	1.57E-09	1.50E-09	1.46E-09	1.44E-09
SSE	1.86E-09	1.76E-09	1.69E-09	1.65E-09	1.56E-09	1.49E-09	1.42E-09
S	1.20E-09	1.16E-09	1.11E-09	1.07E-09	1.03E-09	9.96E-10	9.67E-10
SSW	1.04E-09	9.85E-10	9.51E-10	9.16E-10	8.78E-10	8.46E-10	8.15E-10
SW	1.14E-09	1.08E-09	1.02E-09	9.62E-10	1.01E-09	9.88E-10	9.93E-10
WSW	9.89E-10	9.58E-10	9.19E-10	8.74E-10	8.35E-10	8.03E-10	7.53E-10
W	1.01E-09	9.61E-10	9.21E-10	8.85E-10	8.52E-10	8.21E-10	7.93E-10
WNW	1.49E-09	1.42E-09	1.34E-09	1.29E-09	1.23E-09	1.18E-09	1.14E-09
NW	1.28E-09	1.23E-09	1.19E-09	1.14E-09	1.10E-09	1.06E-09	1.03E-09
NNW	1.41E-09	1.34E-09	1.29E-09	1.22E-09	1.19E-09	1.14E-09	1.10E-09

Period of Record: 9-1-76 to 8-31-78

* Measured relevant to the Offgas Stack.

Table 14 Reactor Building Vent Dispersion Parameters for Short Term Elevated Releases ≤500 Hrs/Yr or ≤150 Hrs/Qtr (cont'd)

For Standard Distances (As Measured from the Offgas Stack) (D/q), m^{-2}

Miles

Sector*	4.3	4.4	4.5	4.6	4.7	4.8	4.9
N	1.13E-09	1.09E-09	1.05E-09	1.02E-09	9.85E-10	9.67E-10	9.40E-10
NNE	9.68E-10	9.29E-10	8.71E-10	8.40E-10	8.07E-10	7.79E-10	7.49E-10
NE	6.98E-10	6.63E-10	6.16E-10	6.06E-10	5.87E-10	5.62E-10	5.45E-10
ENE	6.19E-10	5.96E-10	5.55E-10	5.37E-10	5.17E-10	5.06E-10	4.86E-10
E	7.43E-10	7.10E-10	6.81E-10	6.53E-10	6.25E-10	6.01E-10	5.72E-10
ESE	1.24E-09	1.18E-09	1.13E-09	1.08E-09	1.04E-09	9.99E-10	9.57E-10
SE	1.38E-09	1.31E-09	1.26E-09	1.21E-09	1.16E-09	1.12E-09	1.07E-09
SSE	1.36E-09	1.30E-09	1.25E-09	1.18E-09	1.14E-09	1.09E-09	1.05E-09
S	9.28E-10	8.94E-10	8.64E-10	8.38E-10	8.12E-10	7.83E-10	7.60E-10
SSW	7.88E-10	7.61E-10	7.38E-10	7.17E-10	6.89E-10	6.70E-10	6.49E-10
SW	1.09E-09	1.06E-09	1.11E-09	1.07E-09	1.02E-09	9.83E-10	9.46E-10
WSW	7.39E-10	7.09E-10	7.33E-10	7.08E-10	6.86E-10	6.70E-10	6.50E-10
W	7.67E-10	7.44E-10	7.22E-10	7.02E-10	6.79E-10	6.61E-10	6.36E-10
WNW	1.10E-09	1.06E-09	1.02E-09	9.86E-10	9.55E-10	9.22E-10	8.94E-10
NW	9.96E-10	9.60E-10	9.27E-10	9.00E-10	8.73E-10	8.48E-10	8.24E-10
NNW	1.07E-09	1.02E-09	1.01E-09	9.77E-10	9.43E-10	9.13E-10	8.84E-10

Period of Record: 9-1-76 to 8-31-78

* Measured relevant to the Offgas Stack.

Table 14 Reactor Building Vent Dispersion Parameters for Short Term Elevated Releases ≤500 Hrs/Yr or ≤150 Hrs/Qtr (cont'd)

For Standard Distances (As Measured from the Offgas Stack) (D/q), m^{-2}

Sector*	Miles 5.0
N	9.09E-10
NNE	7.21E-10
NE	5.24E-10
ENE	4.68E-10
E	5.58E-10
ESE	9.19E-10
SE	1.04E-09
SSE	1.01E-09
S	1.29E-09
SSW	6.32E-10
SW	9.10E-10
WSW	6.32E-10
W	6.21E-10
WNW	8.70E-10
NW	7.93E-10
NNW	8.42E-10

Period of Record: 9-1-76 to 8-31-78

* Measured relevant to the Offgas Stack.

OFFSITE DOSE CALCULATION MANUAL - TABLE OF CONTENTS

SECTION		PAGE
1.0	RECORD OF REVISION	4
Table 1	Monticello Nuclear Generating Plant Site Meteorology - Stability Class A, Elevation 10 Meters	5
Table 2	Monticello Nuclear Generating Plant Site Meteorology - Stability Class B, Elevation 10 Meters	6
Table 3	Monticello Nuclear Generating Plant Site Meteorology - Stability Class C, Elevation 10 Meters	7
Table 4	Monticello Nuclear Generating Plant Site Meteorology - Stability Class D, Elevation 10 Meters	8
Table 5	onticello Nuclear Generating Plant Site Meteorology - Stability Class E, Elevation 10 Meters	9
Table 6	Monticello Nuclear Generating Plant Site Meteorology - Stability Class F, Elevation 10 Meters	10
Table 7	Monticello Nuclear Generating Plant Site Meteorology - Stability Class G, Elevation 10 Meters	11
Table 8	Monticello Nuclear Generating Plant Site Meteorology - All Classes Combined Elevation 10 Meters	12
Table 9	Monticello Nuclear Generating Plant Site Meteorology - Stability Class A, Elevation 100 Meters	14
Table 10	Monticello Nuclear Generating Plant Site Meteorology - Stability Class B, Elevation 100 Meters	15
Table 11	Monticello Nuclear Generating Plant Site Meteorology - Stability Class C, Elevation 100 Meters	16
Table 12	Monticello Nuclear Generating Plant Site Meteorology - Stability Class D, Elevation 100 Meters	17

Prepared By: B Peterson	
Reviewed By:	
OC Final Review Meeting: # 2242	Date: 11/02/2000
Approved By Plant Manager:	Date:

3087 (DOCUMENT CHANGE, HOLD, AND COMMENT FORM) incorporated:			
Resp Supv: CHEM	Assoc Ref: CHEM-I	SR: N	Freq: 2 yrs
ARMS: ODCM-APP-B	Doc Type: 7030	Admin Initials:	Date:

l/plr

SECTION **PAGE**

Table 13 Monticello Nuclear Generating Plant Site Meteorology - Stability Class E, Elevation 100 Meters 18

Table 14 Monticello Nuclear Generating Plant Site Meteorology - Stability Class F, Elevation 100 Meters 19

Table 15 Monticello Nuclear Generating Plant Site Meteorology - Stability Class G, Elevation 100 Meters 20

Table 16 Monticello Nuclear Generating Plant Site Meteorology - All Classes Combined Elevation 100 Meters 21

1.0 RECORD OF REVISION

Revision No.	Date	Reason for Revision
0	October - 2000	Moved previous ODCM-07.01 and ODCM-08.01 tables of meterological data to this document.

Table 1 Monticello Nuclear Generating Plant Site Meteorology - Stability Class A, Elevation 10 Meters

Frequency Distribution Tables, Hours at each Wind Speed and Direction

Period of record: 9-1-76 through 8-31-78

	Wind Speed (mph) at 10 Meter Level						
Direction	1 to 3	4 to 7	8 to 12	13 to 18	19 to 24	Above 24	Total
N	4	18	63	30	7	0	122
NNE	2	20	30	14	2	0	68
NE	1	13	21	26	2	2	65
NNE	1	14	16	4	0	0	35
E	0	28	40	12	0	0	80
ESE	3	33	50	5	6	0	97
SE	2	26	50	35	12	3	128
SSE	8	46	96	122	11	0	283
S	9	36	68	117	42	3	275
SSW	5	63	94	58	20	4	244
SW	4	35	64	32	5	3	143
WSW	3	25	74	26	0	0	128
W	0	29	47	18	1	0	95
WNW	4	34	73	79	14	0	204
NW	3	29	58	61	3	0	154
NNW	6	29	109	67	13	0	224
VAR	0	0	0	0	0	0	0

Total Hours This Class: 2350
Hours of Calm This Class: 5
Percent of All Data This Class: 14.27

Table 2 Monticello Nuclear Generating Plant Site Meteorology - Stability Class B, Elevation 10 Meters

Frequency Distribution Tables, Hours at each Wind Speed and Direction

Period of record: 9-1-76 through 8-31-78

	Wind Speed (mph) at 10 Meter Level						
Direction	1 to 3	4 to 7	8 to 12	13 to 18	19 to 24	Above 24	Total
N	2	14	19	4	0	1	40
NNE	4	10	8	5	0	0	27
NE	0	6	3	2	0	0	11
ENE	1	11	7	2	0	0	21
E	0	13	4	0	0	0	17
ESE	1	15	10	3	3	0	32
SE	0	9	9	9	0	0	27
SSE	2	12	9	9	0	0	32
S	2	13	21	7	1	0	44
SSW	1	22	19	4	0	0	46
SW	0	11	10	3	0	0	24
WSW	1	12	11	3	0	0	27
W	0	12	19	8	2	1	42
WNW	0	11	20	21	5	1	58
NW	1	8	22	13	3	0	47
NNW	1	8	40	26	4	1	80
VAR	0	0	0	0	0	0	0

Total Hours This Class: 575
Hours of Calm This Class: 0
Percent of All Data This Class: 3.49

Table 3 Monticello Nuclear Generating Plant Site Meteorology - Stability Class C, Elevation 10 Meters

Frequency Distribution Tables, Hours at each Wind Speed and Direction

Period of record: 9-1-76 through 8-31-78

	Wind Speed (mph) at 10 Meter Level						
Direction	1 to 3	4 to 7	8 to 12	13 to 18	19 to 24	Above 24	Total
N	0	12	16	8	0	0	36
NNE	3	13	13	4	1	0	34
NE	2	10	11	5	2	0	30
ENE	1	19	4	2	0	0	26
E	0	8	10	2	0	0	20
ESE	2	14	12	5	2	0	35
SE	0	12	16	9	0	0	37
SSE	0	10	21	8	0	0	39
S	6	12	28	18	3	0	67
SSW	3	16	12	3	2	1	37
SW	3	11	14	3	1	0	32
WSW	2	5	11	2	0	0	20
W	4	22	19	5	1	0	51
WNW	4	23	38	19	3	0	87
NW	3	17	18	30	4	0	72
NNW	2	22	40	27	5	1	97
VAR	0	0	0	0	0	0	0

Total Hours This Class: 720
Hours of Calm This Class: 0
Percent of All Data This Class: 4.37

Table 4 Monticello Nuclear Generating Plant Site Meteorology - Stability Class D, Elevation 10 Meters

Frequency Distribution Tables, Hours at each Wind Speed and Direction

Period of record: 9-1-76 through 8-31-78

	Wind Speed (mph) at 10 Meter Level						
Direction	1 to 3	4 to 7	8 to 12	13 to 18	19 to 24	Above 24	Total
N	9	107	135	39	1	0	291
NNE	32	132	87	18	1	0	270
NE	37	129	116	50	3	0	335
ENE	43	153	66	30	1	0	293
E	29	125	64	27	0	0	245
ESE	28	107	148	60	4	0	347
SE	16	103	153	36	2	0	310
SSE	13	97	103	35	2	0	250
S	19	84	96	33	1	0	233
SSW	16	73	70	19	6	1	185
SW	19	58	52	10	4	0	143
WSW	14	69	63	14	2	1	163
W	16	79	98	33	3	5	234
WNW	13	112	262	159	25	2	573
NW	17	82	255	232	61	3	650
NNW	19	104	247	246	49	1	666
VAR	0	0	0	0	0	0	0

Total Hours This Class: 5198
Hours of Calm This Class: 10
Percent of All Data This Class: 31.56

Table 5 Monticello Nuclear Generating Plant Site Meteorology - Stability Class E, Elevation 10 Meters

Frequency Distribution Tables, Hours at each Wind Speed and Direction

Period of record: 9-1-76 through 8-31-78

	Wind Speed (mph) at 10 Meter Level						
Direction	1 to 3	4 to 7	8 to 12	13 to 18	19 to 24	Above 24	Total
N	20	98	57	6	0	0	181
NNE	43	81	35	2	0	0	161
NE	35	94	41	6	2	0	178
ENE	50	122	29	10	0	0	211
E	36	109	40	2	0	0	187
ESE	26	117	46	6	0	0	195
SE	19	111	136	18	2	0	286
SSE	20	95	116	33	1	0	265
S	22	84	144	43	1	0	294
SSW	22	72	99	25	9	0	227
SW	23	84	57	10	2	0	176
WSW	37	86	44	4	0	0	171
W	30	156	123	12	4	0	325
WNW	24	195	233	41	2	0	495
NW	20	133	247	84	0	0	484
NNW	25	145	217	38	1	0	426
VAR	0	0	0	0	0	0	0

Total Hours This Class: 4269
Hours of Calm This Class: 7
Percent of All Data This Class: 25.92

Table 6 Monticello Nuclear Generating Plant Site Meteorology - Stability Class F, Elevation 10 Meters

Frequency Distribution Tables, Hours at each Wind Speed and Direction

Period of record: 9-1-76 through 8-31-78

	Wind Speed (mph) at 10 Meter Level						
Direction	1 to 3	4 to 7	8 to 12	13 to 18	19 to 24	Above 24	Total
N	30	62	3	0	0	0	95
NNE	37	54	0	0	0	0	91
NE	29	29	0	0	0	0	58
ENE	32	28	0	0	0	0	60
E	32	59	5	0	0	0	96
ESE	25	97	11	0	0	0	133
SE	22	83	19	0	0	0	124
SSE	16	122	12	0	0	0	150
S	24	93	31	3	0	0	151
SSW	27	67	14	0	0	0	108
SW	27	52	7	0	0	0	86
WSW	52	68	8	0	0	0	128
W	51	91	14	0	0	0	156
WNW	28	68	9	0	0	0	105
NW	36	67	12	0	0	0	115
NNW	30	119	29	0	0	0	178
VAR	0	0	0	0	0	0	0

Total Hours This Class: 1847
Hours of Calm This Class: 13
Percent of All Data This Class: 11.21

Table 7 Monticello Nuclear Generating Plant Site Meteorology - Stability Class G, Elevation 10 Meters

Frequency Distribution Tables, Hours at each Wind Speed and Direction

Period of record: 9-1-76 through 8-31-78

	Wind Speed (mph) at 10 Meter Level						
Direction	1 to 3	4 to 7	8 to 12	13 to 18	19 to 24	Above 24	Total
N	45	31	0	0	0	0	76
NNE	40	16	0	0	0	0	56
NE	33	12	0	0	0	0	45
ENE	31	5	0	0	0	0	36
E	46	18	0	0	0	0	64
ESE	47	54	2	0	0	0	103
SE	52	34	1	1	0	0	88
SSE	67	111	3	6	0	0	187
S	64	109	23	2	0	0	198
SSW	61	65	10	2	0	0	138
SW	43	32	1	0	0	0	76
WSW	77	37	0	0	0	0	114
W	53	31	0	0	0	0	84
WNW	37	13	2	0	0	0	52
NW	49	15	3	4	0	0	71
NNW	47	48	2	0	0	0	97
VAR	0	0	0	0	0	0	0

Total Hours This Class: 1512
Hours of Calm This Class: 27
Percent of All Data This Class: 9.18

Table 8 Monticello Nuclear Generating Plant Site Meteorology - All Classes Combined
Elevation 10 Meters

Frequency Distribution Tables, Hours at each Wind Speed and Direction

Period of record: 9-1-76 through 8-31-78

	Wind Speed (mph) at 10 Meter Level						
Direction	1 to 3	4 to 7	8 to 12	13 to 18	19 to 24	Above 24	Total
N	110	342	293	87	8	1	841
NNE	161	326	173	43	4	0	707
NE	137	293	192	89	9	2	722
ENE	159	352	122	48	1	0	682
E	143	360	163	43	0	0	709
ESE	132	437	279	79	15	0	942
SE	111	378	384	108	16	3	1000
SSE	126	493	360	213	14	0	1206
S	146	431	411	223	48	3	1262
SSW	135	378	318	111	37	6	985
SW	119	283	205	58	12	3	680
WSW	186	302	211	49	2	1	751
W	154	420	320	76	11	6	987
WNW	110	456	637	319	49	3	1574
NW	129	351	615	424	71	3	1593
NNW	130	475	684	404	72	3	1768
VAR	0	0	0	0	0	0	0

Table 8 Monticello Nuclear Generating Plant Site Meteorology - All Classes Combined
Elevation 10 Meters (cont'd)

Frequency Distribution Tables, Hours at each Wind Speed and Direction

Period of record: 9-1-76 through 8-31-78

Data Recovery for the Period

Total Hours:	17520
Hours of Calm:	62
Hours of Bad Data:	1049
Percent Data Recovery:	94.01

Percent Acceptable Observations in each Stability Class

Class A	14.27
Class B	3.49
Class C	4.37
Class D	31.56
Class E	25.92
Class F	11.21
Class G	9.18

Average Wind Speed for each Wind Category

1 to 3 MPH	2.5
4 to 7 MPH	5.5
8 to 12 MPH	9.7
13 to 18 MPH	14.7
19 to 24 MPH	20.6
Above 24 MPH	27.2

Table 9 Monticello Nuclear Generating Plant Site Meteorology - Stability Class A, Elevation 100 Meters

Frequency Distribution Tables, Hours at each Wind Speed and Direction

Period of record: 9-1-76 through 8-31-78

	Wind Speed (mph) at 100 Meter Level						
Direction	1 to 3	4 to 7	8 to 12	13 to 18	19 to 24	Above 24	Total
N	0	1	2	10	1	0	14
NNE	0	1	1	1	0	0	3
NE	0	0	1	0	0	0	1
ENE	0	0	0	0	1	0	1
E	0	1	4	0	0	0	5
ESE	0	0	4	0	0	0	4
SE	0	0	4	8	0	6	18
SSE	0	1	5	42	36	15	99
S	0	1	3	28	35	12	79
SSW	0	1	10	37	53	39	140
SW	0	0	4	19	6	5	36
WSW	0	0	3	16	10	1	30
W	0	0	0	7	2	0	9
WNW	0	0	2	4	1	2	9
NW	0	0	3	6	6	3	18
NNW	0	0	1	14	4	0	19
VAR	0	0	0	0	0	0	0

Total Hours This Class: 489
Hours of Calm This Class: 4
Percent of All Data This Class: 2.95

Table 10 Monticello Nuclear Generating Plant Site Meteorology - Stability Class B, Elevation 100 Meters

Frequency Distribution Tables, Hours at each Wind Speed and Direction

Period of record: 9-1-76 through 8-31-78

	Wind Speed (mph) at 100 Meter Level						
Direction	1 to 3	4 to 7	8 to 12	13 to 18	19 to 24	Above 24	Total
N	0	3	13	18	3	0	37
NNE	0	6	3	9	2	2	22
NE	0	1	7	6	0	0	14
ENE	0	2	3	7	2	0	14
E	0	2	15	1	0	0	18
ESE	0	5	17	3	0	2	27
SE	1	7	15	9	2	2	36
SSE	1	9	28	12	8	2	60
S	0	5	23	18	3	0	49
SSW	0	8	23	17	5	2	60
SW	0	7	18	8	5	1	39
WSW	0	7	8	14	2	1	32
W	0	4	8	18	5	0	35
WNW	0	4	12	17	7	6	46
NW	1	5	14	23	12	5	60
NNW	0	1	8	25	11	2	47
VAR	0	0	0	0	0	0	0

Total Hours This Class: 602
Hours of Calm This Class: 6
Percent of All Data This Class: 3.64

Table 11 Monticello Nuclear Generating Plant Site Meteorology - Stability Class C, Elevation 100 Meters

Frequency Distribution Tables, Hours at each Wind Speed and Direction

Period of record: 9-1-76 through 8-31-78

	Wind Speed (mph) at 100 Meter Level						
Direction	1 to 3	4 to 7	8 to 12	13 to 18	19 to 24	Above 24	Total
N	3	9	26	25	13	2	78
NNE	2	12	14	14	8	2	52
NE	1	7	9	8	2	0	27
ENE	0	5	12	6	1	0	24
E	0	13	19	1	2	0	35
ESE	0	13	25	11	1	1	51
SE	2	17	12	8	4	0	43
SSE	0	26	38	19	10	2	95
S	0	15	23	13	7	4	62
SSW	0	28	33	23	11	2	97
SW	0	20	24	17	4	0	65
WSW	3	17	27	14	3	1	65
W	3	10	20	14	8	3	58
WNW	3	10	16	27	18	9	83
NW	2	8	22	38	26	10	106
NNW	2	3	16	42	19	8	90
VAR	0	0	0	0	0	0	0

Total Hours This Class: 1041
Hours of Calm This Class: 10
Percent of All Data This Class: 4.29

Table 12 Monticello Nuclear Generating Plant Site Meteorology - Stability Class D, Elevation 100 Meters

Frequency Distribution Tables, Hours at each Wind Speed and Direction

Period of record: 9-1-76 through 8-31-78

	Wind Speed (mph) at 100 Meter Level						
Direction	1 to 3	4 to 7	8 to 12	13 to 18	19 to 24	Above 24	Total
N	11	51		95	181	130	82
NNE	11	41	106	120	50	12	340
NE	15	53	105	93	25	8	299
ENE	14	41	131	83	59	12	340
E	18	61	103	62	38	6	288
ESE	17	55	101	85	47	31	336
SE	13	57	108	152	68	23	421
SSE	9	63	119	148	71	17	427
S	16	61	95	122	61	8	363
SSW	14	61	85	120	46	34	360
SW	14	54	80	74	32	11	265
WSW	13	52	69	44	21	11	210
W	8	45	89	59	29	17	247
WNW	14	51	141	165	77	62	510
NW	7	50	170	366	312	143	1048
NNW	12	52	176	312	350	229	1131
VAR	0	0	0	0	0	0	0

Total Hours This Class: 7264
Hours of Calm This Class: 129
Percent of All Data This Class: 43.87

Table 13 Monticello Nuclear Generating Plant Site Meteorology - Stability Class E, Elevation 100 Meters

Frequency Distribution Tables, Hours at each Wind Speed and Direction

Period of record: 9-1-76 through 8-31-78

	Wind Speed (mph) at 100 Meter Level						
Direction	1 to 3	4 to 7	8 to 12	13 to 18	19 to 24	Above 24	Total
N	4	17	59	99	82	11	272
NNE	7	18	37	68	32	3	165
NE	4	16	47	58	20	2	147
ENE	4	33	68	93	27	9	234
E	4	27	64	75	15	2	187
ESE	5	20	46	74	37	11	193
SE	10	23	63	97	58	3	254
SSE	5	22	58	94	105	16	300
S	5	13	57	140	97	20	332
SSW	2	25	49	115	125	22	338
SW	7	24	67	102	84	18	302
WSW	3	19	42	73	37	8	182
W	5	20	47	55	35	2	164
WNW	4	18	63	136	93	13	327
NW	6	15	71	172	141	12	417
NNW	3	27	86	244	198	17	575
VAR	0	0	0	0	0	0	0

Total Hours This Class: 4433
Hours of Calm This Class: 44
Percent of All Data This Class: 26.77

Table 14 Monticello Nuclear Generating Plant Site Meteorology - Stability Class F, Elevation 100 Meters

Frequency Distribution Tables, Hours at each Wind Speed and Direction

Period of record: 9-1-76 through 8-31-78

	Wind Speed (mph) at 100 Meter Level						
Direction	1 to 3	4 to 7	8 to 12	13 to 18	19 to 24	Above 24	Total
N	3	12	28	45	28	0	116
NNE	2	4	15	39	16	1	77
NE	4	7	23	49	17	1	101
ENE	1	7	19	40	6	3	76
E	4	10	26	15	3	0	58
ESE	8	16	28	31	14	2	99
SE	2	7	28	46	19	5	107
SSE	2	8	25	62	40	1	138
S	1	12	30	60	36	1	140
SSW	1	11	28	58	57	4	159
SW	3	14	19	75	33	2	146
WSW	5	6	22	28	29	0	90
W	1	14	22	27	16	0	80
WNW	4	10	44	49	27	1	135
NW	4	12	37	87	29	0	169
NNW	4	14	38	51	21	1	129
VAR	0	0	0	0	0	0	0

Total Hours This Class: 1826
Hours of Calm This Class: 6
Percent of All Data This Class: 11.03

Table 15 Monticello Nuclear Generating Plant Site Meteorology - Stability Class G, Elevation 100 Meters

Frequency Distribution Tables, Hours at each Wind Speed and Direction

Period of record: 9-1-76 through 8-31-78

	Wind Speed (mph) at 100 Meter Level						
Direction	1 to 3	4 to 7	8 to 12	13 to 18	19 to 24	Above 24	Total
N	6	8	16	9	0	0	39
NNE	3	12	15	8	1	0	39
NE	4	6	11	16	4	0	41
ENE	6	11	15	11	3	1	47
E	8	7	11	11	1	0	38
ESE	1	12	9	16	2	0	40
SE	5	9	10	5	9	1	39
SSE	6	6	12	8	11	1	44
S	2	6	13	30	12	1	64
SSW	1	14	26	55	21	0	117
SW	1	9	21	26	25	3	85
WSW	5	16	29	16	14	0	80
W	3	14	8	16	18	2	61
WNW	5	15	23	21	9	0	73
NW	2	7	14	17	1	0	41
NNW	8	13	21	7	5	0	54
VAR	0	0	0	0	0	0	0

Total Hours This Class:	904
Hours of Calm This Class:	2
Percent of All Data This Class:	5.46

Table 16 Monticello Nuclear Generating Plant Site Meteorology - All Classes Combined
Elevation 100 Meters

Frequency Distribution Tables, Hours at each Wind Speed and Direction

Period of record: 9-1-76 through 8-31-78

	Wind Speed (mph) at 100 Meter Level						
Direction	1 to 3	4 to 7	8 to 12	13 to 18	19 to 24	Above 24	Total
N	27	101	239	387	257	95	1106
NNE	25	94	191	259	109	20	698
NE	28	90	203	230	68	11	630
ENE	25	99	248	240	99	25	736
E	34	121	242	165	59	8	629
ESE	31	121	230	220	101	47	750
SE	33	120	240	325	160	40	918
SSE	23	135	285	385	281	54	1163
S	24	113	244	411	251	46	1089
SSW	18	148	259	425	318	103	1271
SW	25	128	233	321	191	40	938
WSW	29	117	200	205	116	22	689
W	20	107	194	196	113	24	654
WNW	30	108	301	419	232	93	1183
NW	22	97	331	709	527	173	1859
NNW	29	110	346	695	608	257	2045
VAR	0	0	0	0	0	0	0

Table 16 Monticello Nuclear Generating Plant Site Meteorology - All Classes Combined Elevation 100 Meters (cont'd)

Frequency Distribution Tables, Hours at each Wind Speed and Direction

Period of record: 9-1-76 through 8-31-78

Data Recovery for the Period

Total Hours:	17520
Hours of Calm:	201
Hours of Bad Data:	961
Percent Data Recovery:	94.51

Percent Acceptable Observations in each Stability Class

Class A	2.95
Class B	3.64
Class C	6.29
Class D	43.87
Class E	26.77
Class F	11.03
Class G	5.46

Average Wind Speed for each Wind Category

1 to 3 MPH	2.5
4 to 7 MPH	5.8
8 to 12 MPH	10.1
13 to 18 MPH	15.4
19 to 24 MPH	20.9
Above 24 MPH	28.1

OFFSITE DOSE CALCULATION MANUAL - TABLE OF CONTENTS

SECTION		PAGE
1.0	RECORD OF REVISION	2
Table 1	Parameters for Cow and Goat Milk Pathways	3
Table 2	Parameters for the Cow Meat Pathway	4
Table 3	Parameters for the Vegetable Pathway	5

Prepared By: B Peterson	
Reviewed By: [illegible]	
OC Final Review Meeting: #2242	Date: 11/02/2000
Approved By Plant Manager:	Date:

3087 (DOCUMENT CHANGE, HOLD, AND COMMENT FORM) incorporated:			
Resp Supv: CHEM	Assoc Ref: CHEM-I	SR: N	Freq: 2 yrs
ARMS: ODCM-APP-C	Doc Type: 7030	Admin Initials:	Date:

1.0 RECORD OF REVISION

Revision No.	Date	Reason for Revision
0	October - 2000	Moved previous ODCM-10.01 tables of parameters to this document.

Table 1 Parameters for Cow and Goat Milk Pathways

Parameter	Value	Reference in Reg. Guide 1.109 Rev. 1
Q_F (kg/day)	50 (cow) 6 (goat)	Table E-3 Table E-3
t_f (seconds)	1.73×10^5 (2 days)	Table E-15
r	1.0 (radioiodines) 0.2 (particulates)	Table E-15 Table E-15
$(DFL_i)_a$ (mrem/pCi)	Each radionuclide	Table E-11 to E-14
F_m (pCi/day per pCi/liter)	Each stable element	Table E-1 (cow) Table E-2 (goat)
t_b (seconds)	4.73×10^8 (15 yr)	Table E-15
Y_s(kg/m^2)	2.0	Table E-15
Y_p (kg/m^2)	.75	Table E-15
t_h (seconds)	7.78×10^6 (90 days)	Table E-15
U_{ap} (liters/yr)	330 infant 330 child 400 teen 310 adult	Table E-5 Table E-5 Table E-5 Table E-5
t_{ep} (seconds)	2.59×10^6 (pasture)	Table E-15
t_{es} (seconds)	5.18×10^6 (stored feed)	Table E-15
B_{iv} (pCi/kg (wet weight) per pCi/kg (dry soil))	Each stable element	Table E-1
P (kg dry soil/m^2)	240	Table E-15

Table 2 Parameters for the Cow Meat Pathway

Parameter	Value	Reference in Reg. Guide 1.109 Rev. 1
r	1.0 (radioiodines) 0.2 (particulates)	Table E-15 Table E-15
F_f (pCi/kg per pCi/day)	Each stable element	Table E-1
U_{ap} (kg/yr)	0 infant 41 child 65 teen 110 adult	Table E-5 Table E-5 Table E-5 Table E-5
$(DFL_i)_a$ (mrem/pCi)	Each radionuclide	Table E-11 to E-14
Y_p (kg/m^2)	0.7	Table E-15
Y_s(kg/m^2)	2.0	Table E-15
t_b (seconds)	4.73×10^8 (15 yr)	Table E-15
t_s (seconds)	1.73×10^6 (20 days)	Table E-15
t_h (seconds)	7.78×10^6 (90 days)	Table E-15
t_{ep} (seconds)	2.59×10^6 (pasture)	Table E-15
t_{es} (seconds)	5.18×10^6 (stored feed)	Table E-15
Q_F (kg/day)	50	Table E-3
B_{iv} (pCi/kg (wet weight) per pCi/kg (dry soil))	Each stable element	Table E-1
P (kg dry soil/m^2)	240	Table E-15

Table 3 Parameters for the Vegetable Pathway

Parameter	Value	Reference in Reg. Guide 1.109 Rev. 1
r (dimensionless)	1.0 (radioiodines) 0.2 (particulates)	Table E-1 Table E-1
$(DFL_i)_a$ (mrem/Ci)	Each radionuclide	Tables E-11 to E-14
U^L_a (kg/yr)	0 Infant 26 Child 42 Teen 64 Adult	Table E-5 Table E-5 Table E-5 Table E-5
U^s_a (kg/yr)	0 Infant 520 Child 630 Teen 520 Adult	Table E-5 Table E-5 Table E-5 Table E-5
t_L (seconds)	8.6×10^4 (1 day)	Table E-15
t_h (seconds)	5.18×10^6 (60 days)	Table E-15
Y_v (kg/m2)	2.0	Table E-15
t_e (seconds)	5.18×10^6 (60 days)	Table E-15
t_b (seconds)	4.73×10^8 (15 yr)	Table E-15
P (kg/(dry soil)/m2)	240	Table E-15
B_{iv} (pCi/kg(wet weight) per pCi/kg (dry soil))	Each stable element	Table E-1