OG-00-122
December 12, 2000

Domestic Members
AmerenUE
Callaway
American Electric Power Co.
D.C. Cook 1 & 2
Carolina Power & Light Co.
H.B. Robinson 2
Shearon Harris
Commonwealth Edison
Braidwood 1 & 2
Byron 1 & 2
Consolidated Edison Company of NY, Inc.
Indian Point 2
Duke Power Company
Catawba 1 & 2
McGuire 1 & 2
First Energy Nuclear Operating Co.
Beaver Valley 1 & 2
Florida Power & Light Co.
Turkey Point 3 & 4
New York Power Authority
Indian Point 3
Northeast Utilities
Seabrook
Millstone 3
Northern States Power Co.
Prairie Island 1 & 2
Pacific Gas & Electric Co.
Diablo Canyon 1 & 2
PSEG - Nuclear
Salem 1 & 2
Rochester Gas & Electric Co.
R.E. Ginna
South Carolina Electric & Gas Co.
V.C. Summer
STP Nuclear Operating Co.
South Texas Project 1 & 2
Southern Nuclear Operating Co.
J.M. Farley 1 & 2
A.W. Vogtle 1 & 2
Tennessee Valley Authority
Sequoyah 1 & 2
Watts Bar 1
TXU Electric
Comanche Peak 1 & 2
Virginia Power Co.
North Anna 1 & 2
Surry 1 & 2
Wisconsin Electric Power Co.
Point Beach 1 & 2
Wisconsin Public Service Corp.
Kewaunee
Wolf Creek Nuclear Operating Corp.
Wolf Creek

International Members
Electrabel
Doel 1, 2, 4
Tihange 1, 3
Kansai Electric Power Co.
Mihama 1
Takahama 1
Ohi 1 & 2
Korea Electric Power Co.
Kori 1 - 4
Yonggwang 1 & 2
Nuclear Electric plc
Sizewell B
Nuklearna Elektrarna Krsko
Krsko
Spanish Utilities
Asco 1 & 2
Vandellos 2
Almaraz 1 & 2
Vattenfall AB
Ringhals 2 - 4
Taiwan Power Co.
Maanshan 1 & 2

To: Christopher I. Grimes, Chief
License Renewal and Standardization Branch
Division of Regulatory Improvement Programs
Office of Nuclear Reactor Regulation
U.S. Nuclear Regulatory Commission

Subject: Westinghouse Owners Group
Transmittal of WCAP-14577, Revision 1, "License Renewal Evaluation; Aging Management Review of Internals, October 2000

References: (1) OG-99-096, Responses to NRC Request for Additional Information on WCAP-14577, November 25, 1999
(2) OG-00-096, Transmittal of WCAP-14577, Revision 1, "License Renewal Evaluation; Aging Management Review of Internals, October 2000, Showing Text Modifications Identified in the WOG Responses to NRC RAIs, October 9, 2000

The Westinghouse Owners Group has incorporated the text changes to WCAP-14577 identified in the responses to RAIs on that report (Reference 1). A line-in / line-out draft of Revision 1 was provided via Reference 2. You subsequently identified some editorial corrections in that draft via fax (Raj Anand to Sumner Bemis, November 14, 2000), which have been incorporated. All added or relocated text is flagged by margin bars.

10 copies of WCAP-14577 Revision 1 are included with this transmittal. It is our understanding that a Final Safety Evaluation will be written based on this revision.

Very truly yours,

Roger A. Newton

Roger A. Newton, Chairman
License Renewal Working Group
Westinghouse Owners Group

enclosure

cc: R.K. Anand, Project Manager, USNRC License Renewal Project Directorate, (1L, 10R)
WOG License Renewal Working Group (1L)
WOG Steering Committee (1L)
A.P. Drake, W (1L)
C.E. Meyer, W (1L)

00og122.doc

T008

Westinghouse Non-Proprietary Class 3

WCAP - 14577
Rev. 1

License Renewal Evaluation: Aging Management for Reactor Internals

Westinghouse Energy Systems

WCAP-14577 Rev. 1

LICENSE RENEWAL EVALUATION: AGING MANAGEMENT FOR REACTOR INTERNALS

October 2000

D. R. Forsyth
B. L. Silverblatt
T. R. Mager
W. A. Bamford
J. A. Tortorice
J. T. Crane
I. L. W. Wilson

Westinghouse Owners Group (WOG)
Life Cycle Management/License Renewal (LCM/LR) Program

Approved: _____
R. Llovet, Westinghouse Program Manager
WOG LCM/LR Program

Prepared by Westinghouse Electric Corporation for use by members of the WOG. Work performed in Shop Order MUHP-6117 under direction of the WOG LCM/LR Program Core Group.

Westinghouse Electric Company, LLC
P.O. Box 355
Pittsburgh, PA 15230-0355

©2000 Westinghouse Electric Company, LLC
All Rights Reserved

ACKNOWLEDGEMENTS

The authors would like to acknowledge the efforts and support of the Westinghouse Owners Group (WOG) Ad Hoc Technical Group Chairman for this report, Mr. Karl Jacobs of the New York Power Authority.

The authors would also like to thank the other members of the WOG Life Cycle Management/License Renewal (LCM/LR) Program Core Group, and especially the Group Chairman, Mr. Roger Newton of Wisconsin Electric, for their direction and support during the preparation of this report.

In addition, the authors would like to thank those individuals who performed the technical reviews of this report throughout its development. The information and technical comments from Jeff Gilreath of Duke Power, Michael Marino of Northeast Utilities, Robert Nickell of Applied Science & Technology, Charles Pierce of Southern Nuclear, Gene Rathbun of Wolf Creek Nuclear Operating Company, Tom Spry of Commonwealth Edison, Chuck Tomes of Wisconsin Public Service, and N. P. Wolfhope of Virginia Power are appreciated.

The special technical contributions of Chuck Boyd, Dick Schwirian, Charlie Meyer, Gordon Vytlacil, and Ted Meyer of Westinghouse Electric Corporation are also gratefully acknowledged. Thanks are also due to Leslie McSwain and June Crevar for their editorial and production support.

DISCLAIMER OF RESPONSIBILITY

This report was prepared by the WOG LCM/LR Working Group as an account of work sponsored by the WOG. Neither members of the WOG, Westinghouse Electric Company LLC, nor any person acting on their behalf:

- Makes any warranty, express or implied, with respect to the use of any information, apparatus, method, or process disclosed in this report or use thereof may not infringe privately owned rights, or

- Assumes any liabilities with respect to the use of, or for damages resulting from the use of, any information, apparatus, method, or process disclosed in this report

EXECUTIVE SUMMARY

This report evaluates aging of the reactor internals components to ensure that intended functions will be maintained during an extended period of operation. These components perform the following intended functions:

- Ensuring the capability to shut down the reactor and maintain it in a safe shutdown condition
- Providing (nonsafety-related) intended functions that support the intended function listed above
- Ensuring the integrity of the reactor coolant pressure boundary (bottom-mounted instrumentation flux thimbles only)

The reactor internals are subject to an aging management review because these components perform intended functions, are passive, and are long-lived. This aging management review has identified aging effects and provided options that manage these effects. When implemented, the final demonstration to maintain the intended functions during an extended period of operation can be performed by the utility.

The scope of this report includes domestic commercial nuclear power plants with Westinghouse nuclear steam supply systems (NSSSs). Specifically for the reactor internals, the scope is limited to those components that provide:

- Orientation and support of the reactor core
- Orientation, guidance, support, and protection of the reactor control rod assemblies
- Passageway for the directional and metered control of the reactor coolant flow through the reactor core
- Secondary core support for limiting the downward displacement of the core support structure in the event of a postulated failure of the core barrel subassembly

Also included in the scope of this report is the bottom-mounted instrumentation (BMI) flux thimble whose major functions are to maintain the reactor coolant pressure boundary and provide guidance for the neutron flux detectors.

This evaluation was performed in support of the Westinghouse Owners Group (WOG) Life Cycle Management/License Renewal (LCM/LR) program.

Design limits, time-limited aging analyses (TLAAs), aging, and industry issues have been evaluated. Options to manage aging that are part of current industry practice are provided and the effectiveness of these programs during an extended period of operation is discussed.

Options to manage effects that degrade intended functions are also provided. For the reactor internals, the following effects require additional management:

- Baffle/former and barrel/former bolt cracking due to irradiation-induced changes in material properties and irradiation-induced changes in stresses

- Fatigue-related cracking for fatigue-sensitive components

In conclusion, the reactor internals intended functions will be maintained by these options (when implemented) during an extended period of operation. In addition, the system intended functions, supported by the reactor internals intended functions, will also be maintained.

Revision 1 of this report incorporates the changes identified in the WOG response to Nuclear Regulatory Commission Request for Additional Information, included separately as Attachment 1.

TABLE OF CONTENTS

EXECUTIVE SUMMARY iii
TABLE OF CONTENTS vi
LIST OF TABLES ix
LIST OF FIGURES x
LIST OF ACRONYMS AND DEFINITIONS xii

1.0 INTRODUCTION 1-1

1.1 APPLICABILITY 1-2
1.2 REACTOR INTERNALS SCOPE 1-2

2.0 IDENTIFICATION OF TIME-LIMITED AGING ANALYSES AND AGING EFFECTS 2-1

2.1 GENERAL DESCRIPTION AND BOUNDARY 2-1
2.2 COMPONENTS OF THE REACTOR INTERNALS SUBJECT TO AN AGING MANAGEMENT REVIEW 2-2
2.3 DESCRIPTIONS 2-3
2.3.1 Lower Internals Assembly 2-4
2.3.2 Upper Internals Assembly 2-14
2.3.3 Interfacing Components 2-19
2.4 ENGINEERING AND DESIGN DATA 2-22
2.4.1 Codes, Standard, and Regulation Bases 2-22
2.5 TIME-LIMITED AGING ANALYSES 2-25
2.5.1 Fatigue 2-25
2.5.2 Industry and Regulatory Actions on Fatigue 2-25
2.6 OPERATING AND MAINTENANCE HISTORY 2-27
2.6.1 Thermal Shields 2-27
2.6.2 Fasteners – Threaded and Pinned 2-29
2.6.3 Incore Instrumentation Tubes 2-30
2.6.4 Welds 2-31
2.6.5 Holddown Springs/Compensating Rings 2-32
2.6.6 Surveillance Specimens and Guides 2-32
2.6.7 Guide Tubes 2-33
2.6.8 Control Rod 2-34
2.6.9 Guide Tube Removable Inserts Flexures 2-35
2.6.10 Core Barrel 2-35
2.6.11 Core Barrel Flange Plugs 2-35
2.7 AGING EFFECTS 2-36

TABLE OF CONTENTS (Continued)

3.0 TIME-LIMITED AGING ANALYSES AND AGING EFFECT EVALUATIONS 3-1

3.1 AGING MANAGEMENT REVIEW 3-1
- 3.1.1 Irradiation Embrittlement 3-1
- 3.1.2 Stress Corrosion Cracking 3-3
- 3.1.3 Irradiation-Assisted Stress Corrosion Cracking 3-6
- 3.1.4 Erosion and Erosion/Corrosion 3-8
- 3.1.5 Creep/Irradiation Creep 3-8
- 3.1.6 Stress Relaxation 3-10
- 3.1.7 Wear 3-11
- 3.1.8 Thermal Aging 3-12
- 3.1.9 Corrosion 3-13
- 3.1.10 Time-Limited Aging Analyses (Fatigue) Evaluation 3-14
- 3.1.11 Swelling 3-18

3.2 AGING EFFECT MANAGEMENT SUMMARY 3-20
- 3.2.1 Irradiation Embrittlement 3-20
- 3.2.2 Stress Corrosion Cracking 3-20
- 3.2.3 Irradiation-Assisted Stress Corrosion Cracking 3-21
- 3.2.4 Erosion and Erosion/Corrosion 3-21
- 3.2.5 Creep/Irradiation Creep 3-21
- 3.2.6 Stress Relaxation 3-21
- 3.2.7 Wear 3-22
- 3.2.8 Thermal Aging 3-22
- 3.2.9 Corrosion 3-22
- 3.2.10 Fatigue 3-22
- 3.2.11 Swelling 3-22

4.0 AGING MANAGEMENT ACTIVITIES AND PROGRAM ATTRIBUTES 4-1

4.1 CURRENT ACTIVITIES AND PROGRAM ATTRIBUTES 4-1
- 4.1.1 Aging Management Program for Irradiation Embrittlement and Irradiation-Assisted Stress Corrosion Cracking (AMP-4.1) 4-2
- 4.1.2 Aging Management Program for Stress Relaxation (AMP-4.2) 4-3
- 4.1.3 Aging Management Program for Wear (AMP-4.3 and AMP-4.4) 4-4

4.2 ADDITIONAL ACTIVITIES AND PROGRAM ATTRIBUTES 4-5
- 4.2.1 Aging Management Program for Fatigue (AMP-4.5) 4-5
- 4.2.2 Aging Management Program for Baffle/Former and Barrel/Former Bolts (AMP-4.6 and AMP-4.7) 4-6

5.0 SUMMARY AND CONCLUSIONS 5-1

5.1 SUMMARY 5-1

5.2 CONCLUSIONS 5-2

TABLE OF CONTENTS (Continued)

6.0 REFERENCES 6-1

7.0 USE AND APPLICATION OF A GENERIC TECHNICAL REPORT IN A LICENSE RENEWAL APPLICATION 7-1

7.1 IDENTIFY AND DEMONSTRATE APPLICABILITY 7-1
- 7.1.1 Step 1 – Determine if the Generic Technical Report Has Been Reviewed and Approved by the U.S. NRC 7-1
- 7.1.2 Step 2 – Identify and Compare the Generic Technical Report Characteristics to Applicable Plant Characteristics 7-2

7.2 DEMONSTRATE THAT AGING EFFECTS WILL BE MANAGED 7-3
- 7.2.1 Step 3 – Review Aging Effects Based on Plant Operating and Maintenance History 7-3
- 7.2.2 Step 4 – Compare Referenced (GTR) Program Attributes with Existing Plant Activities 7-4
- 7.2.3 Step 5 – Identify Enhancements or New Programs 7-4

8.0 ATTACHMENT 1, RAI RESPONSES 8-1

LIST OF TABLES

Table	Title	Page
2-1	SUMMARY OF REACTOR INTERNALS SUBCOMPONENTS SUPPORTING IDENTIFIED INTENDED FUNCTIONS	2-37
2-2	SUMMARY OF REACTOR INTERNALS SUBCOMPONENTS REQUIRING AGING MANAGEMENT REVIEW	2-38
3-1	ESTIMATES OF REPRESENTATIVE NEUTRON IRRADIATION RANGES FOR BAFFLE PLATES	3-24
3-2	MATERIAL PROPERTIES FOR TYPE 316 CW STAINLESS STEEL [Ref. 20]	3-25
3-3	SUMMARY OF PROJECTED FATIGUE SERVICE	3-26
4-1	AGING MANAGEMENT PROGRAM ATTRIBUTES	4-11
4-2	AGING MANAGEMENT ACTIVITIES AND PROGRAM ATTRIBUTES FOR IRRADIATION EMBRITTLEMENT AND IRRADIATION-ASSISTED STRESS CORROSION CRACKING (AMP-4.1)	4-12
4-3	AGING MANAGEMENT ACTIVITIES AND PROGRAM ATTRIBUTES FOR STRESS RELAXATION (AMP-4.2)	4-13
4-4	AGING MANAGEMENT ACTIVITIES AND PROGRAM ATTRIBUTES FOR WEAR (AMP-4.3)	4-14
4-5	AGING MANAGEMENT ACTIVITIES AND PROGRAM ATTRIBUTES FOR WEAR (AMP-4.4)	4-14
4-6	AGING MANAGEMENT ACTIVITIES AND PROGRAM ATTRIBUTES FOR FATIGUE (AMP-4.5)	4-15
4-7	ADDITIONAL ACTIVITIES AND PROGRAM ATTRIBUTES FOR AGING MANAGEMENT OF BAFFLE/FORMER BOLTS (AMP-4.6)	4-16
4-8	ADDITIONAL ACTIVITIES AND PROGRAM ATTRIBUTES FOR AGING MANAGEMENT OF CORE BARREL/FORMER BOLTS (AMP-4.7)	4-20

LIST OF FIGURES

Figure	Title	Page
2-1	Westinghouse Reactor Internals with Forged Lower Support	2-39
2-2	Westinghouse Reactor Internals with Cast Lower Support	2-40
2-3	Reactor Coolant Flow Paths	2-41
2-4	Reactor Internals Lower Section	2-42
2-5	Radial Keys and Clevis Inserts	2-43
2-6	Representative Baffle/Former Assembly	2-44
2-7	Reactor Internals Upper Section	2-45
4-1	Reactor Internals License Renewal Fatigue Evaluation	4-18
7-1	How to Use a GTR in a License Renewal Application	7-5

LIST OF ACRONYMS AND DEFINITIONS

ACRONYMS, NOMENCLATURE, AND ABBREVIATIONS

ANL	Argonne National Laboratory
AS	Advanced Standard
ASME	American Society of Mechanical Engineers
ASTM	American Society for Testing and Materials
B&W	Babcock and Wilcox
BEF	Best estimate flowrate
BMI	Bottom-mounted instrumentation
BNCS	Board of Nuclear Codes and Standards
BTP	Branch technical position
BWR	Boiling water reactor
CE	Combustion Engineering
CLB	Current licensing basis
CLEE	Cyclic life and environmental effects
CRDM	Control rod drive mechanism
CS	Core support structures
CUF	Cumulative usage factor
CW	Cold-worked
DNBR	Departure from nucleate boiling ratio
DOE	Department of Energy
dpa	Displacement per atom
E-spec	Equipment specification
ECM	Electrochemical machining
ECT	Eddy-current technique
EFPY	Effective full-power years
EOL	End of life
EPRI	Electric Power Research Institute
FAP	Fatigue action plan
FIV	Flow-induced vibration
FSAR	Final safety analysis report
GDC	General Design Criteria
GI	Generic Issue
GL	Generic Letter
GSI	Generic Safety Issue
GT	Guide tubes
HAZ	Heat-affected zone
IASCC	Irradiation-assisted stress corrosion cracking
ICI	Incore instrumentation
I.D. or ID	Inside diameter
IG	Intergranular
IGA	Intergranular attack
IGSCC	Intergranular stress corrosion cracking

LIST OF ACRONYMS AND DEFINITIONS(Continued)

IR	Industry report
IS	Internals structures
ISI	Inservice inspection
JCO	Justification of continued operation
LCB	Lower core barrel
LCM/LR	Life Cycle Management/License Renewal
LCP	Lower core plate
LMFBR, LMR	Liquid metal fast breeder reactor, liquid metal reactor
LOCA	Loss-of-coolant accident
LSF	Lower support forging
MDF	Mechanical design flow
NDE	Nondestructive examination
NEI	Nuclear Energy Institute (formerly NUMARC)
nm	Nanometers
NRC	Nuclear Regulatory Commission
NSSS	Nuclear steam supply system
NUMARC	Nuclear Management and Resource Council
NUREG	Nuclear regulation
OBE	Operating basis earthquake
O.D. or OD	Outside diameter
PB	Pressure boundary
PCT	Peak clad temperature
PRA	Probabilistic risk assessment
PT	Liquid penetrant examination
PVRC	Pressure Vessel Research Council
PWR	Pressurized water reactor
PWSCC	Primary water stress corrosion cracking
RC	Reactor coolant
RCC	Rod cluster control
RCCA	Rod cluster control assembly
RCPB	Reactor coolant pressure boundary
RCS	Reactor coolant system
RIS	Radiation-induced segregation
RPV	Reactor pressure vessel
RTD	Resistance temperature detector
SC	Structure or component
SCC	Stress corrosion cracking
SSC	Systems, structures, and components
SSE	Safe shutdown earthquake
T/C	Thermocouple
TDF	Thermal design flow rate
TG	Transgranular
TGSCC	Transgranular stress corrosion cracking

LIST OF ACRONYMS AND DEFINITIONS(Continued)

TLAA	Time-limited aging analyses
T_m	Melting point of a metal
TS	Thermal shield
UCP	Upper core plate
UT	Ultrasonic testing
W, W	Westinghouse
WOG	Westinghouse Owners Group
XL	Extended Length

DEFINITIONS

Aging management review

Identification and evaluation of aging effects to determine which aging effects require management during an extended period of operation.

Current licensing basis (CLB)

The set of NRC requirements applicable to a specific plant and a licensee's written commitments for ensuring compliance with and operation within applicable NRC requirements and the plant-specific design basis (including all modifications and additions to such commitments over the life of the license) that are docketed and in effect.

Nuclear power plant

Nuclear power facility of a type described in 10 CFR 50.21(b) or 50.22.

Time-limited aging analyses (TLAAs)

Licensee calculations and analyses that:

- Involve systems, structures, and components within the scope of license renewal, as delineated in 10 CFR 54.4(a)
- Consider the effects of aging
- Involve time-limited assumptions defined by the current operating term, for example, 40 years
- Were determined to be relevant by the licensee in making a safety determination
- Involve conclusions or provide the basis for conclusions related to the capability of the system, structure, and component to perform its intended functions, as delineated in 10 CFR 54.4(b)
- Are contained or incorporated by reference in the CLB

1.0 INTRODUCTION

The objectives of this report are to:

- Identify and evaluate aging effects that, if not managed, will degrade component functions that support system or reactor internals intended functions
- Identify and evaluate time-limited aging analyses (TLAAs)
- Provide options, in terms of activities and program attributes, to manage aging effects and address TLAAs

This evaluation starts by identifying why the system, structure, or component (SSC) is within the scope of the license renewal rule [Ref. 1]. An SSC is within the scope of the rule if it supports or performs an intended function. SSCs within the scope of the rule are:

1. The safety-related systems, structures, and components that are relied upon to remain functional during and following design-basis events (10 CFR 50.49 (b)(1)) to ensure the following functions:

    a. The integrity of the reactor coolant pressure boundary,

    b. The capability to shut down the reactor and maintain it in a safe shutdown condition, or

    c. The capability to prevent or mitigate the consequences of accidents that could result in potential offsite exposure comparable to the 10 CFR Part 100 guidelines.

2. All nonsafety-related systems, structures, and components whose failure could prevent any of the functions identified in paragraphs 1 a, b, or c above.

3. All systems, structures, and components relied on in safety analyses or plant evaluations to perform a function that demonstrates compliance with the United States Nuclear Regulatory Commission (U.S. NRC) regulations for fire protection (10 CFR 50.48), environmental qualification (10 CFR 50.49), pressurized thermal shock (10 CFR 50.61), anticipated transients without scram (10 CFR 50.62), and station blackout (10 CFR 50.63).

An intended function is the basis for including an SSC within the scope of license renewal as defined above.

The evaluation continues by determining if the structure or component (SC) is subject to an aging management review. An SC is subject to an aging management review if the SC:

- Supports or performs an intended function of a system or structure within the scope of Part 54

- Performs an intended function in a passive manner
- Is long-lived

The reactor internals parts or subcomponents within the scope of the rule and subject to an aging management review are identified in Section 2.0. Section 2.0 also identifies mechanisms that cause aging effects and applicable TLAAs. The aging management review (Section 3.0) describes age-related degradation mechanisms to identify resulting aging effects. Aging effects are then evaluated to determine degradation of intended functions. Options for managing aging effects that, if not managed, would degrade intended functions and effects caused by TLAAs and age-related degradation mechanisms are provided in Section 4.0.

This report provides the technical basis that demonstrates, on a generic level, how aging management options maintain intended functions and why these options will remain effective during an extended period of operation. The aging management options provided in this evaluation must be developed into programs by utilities applying for a renewed license. Implementation of these plant-specific programs during an extended period of operation completes the demonstration process that aging effects are managed and that intended functions will be maintained.

Reactor coolant system (RCS) level intended functions will be ensured by maintaining the reactor internals functions that support the RCS intended functions. Hereafter, those reactor internals functions that support system/structure intended functions are referenced as reactor internals intended functions. Aging management options identified in this report, when implemented, will ensure that reactor internals intended functions are maintained during an extended period of operation.

1.1 APPLICABILITY

This evaluation is generically applicable to all domestic operating commercial nuclear power plants with the Westinghouse nuclear steam supply system (NSSS). Preparation of the report included establishment of boundaries by Westinghouse as well as utility reviewer confirmation of these boundaries to a practical extent. Use of this report, as referenced by a license renewal application, should include verification of all the bounding information against plant-specific data. This verification identifies what plant-specific data are not covered by this report and should be evaluated as part of the license renewal application.

1.2 REACTOR INTERNALS SCOPE

Reactor internals aging evaluations have been performed on a mechanistic basis in most of the previously published reports concerning reactor internals life extension, life cycle management, and plant license renewal [Refs. 2 and 3]. This report is intended to compile information from these past studies and augment the compilation with new evaluations, recent developments, and information on industry initiatives.

The evaluation of the reactor internals in this report includes:

- Lower core plate and fuel alignment pins
- Lower support forging (or casting)
- Lower support columns
- Diffuser plate
- Core barrel
- Radial support keys and clevis inserts
- Baffle plates
- Former plates
- Core barrel outlet nozzles
- Neutron panels
- Thermal shield
- Irradiation specimen guide
- Secondary core support
- Bottom-mounted incore instrumentation columns and flux thimbles
- Head cooling spray nozzles
- Specimen plugs
- Upper support assembly
- Upper core plate and fuel alignment pins
- Upper support columns
- Guide tubes, flexures, flexureless inserts, support pins
- Upper instrumentation column conduit and supports
- Upper core plate alignment pins
- Holddown spring
- Head and vessel alignment pins
- Drive rods/control rods
- Flow downcomers
- Bolts and locking mechanisms
- Lifting holes
- Mixing devices
- Diffuser plate

This report excludes the following:

- All components within the core region (e.g., fuel assemblies, fuel instrumentation tubes, and thimble plugs)

- All components related to instrumentation and control

- Upper and lower internals storage stands

- Lifting rig

- Reactor vessel guide studs

- Specimen capsules
- Control rod drive mechanisms (CRDMs)
- Bottom-mounted instrumentation columns and flux thimbles*

---

* The inclusion of the flux thimbles in the scope of this report is arbitrary. They are the only pressure boundary component included here, and on a plant specific basis, could also be evaluated together with other pressure boundary components.

2.0 IDENTIFICATION OF TIME-LIMITED AGING ANALYSES AND AGING EFFECTS

This section identifies the time-limited aging analyses (TLAAs) and aging effects related to the reactor internals. First, the reactor internals assembly is described in general terms. This description includes the boundary of the reactor internals covered in this report. Next, the reason why the reactor internals assembly is within the scope of the license renewal rule is provided. This reason identifies the reactor internals intended functions. The subcomponents of the reactor internals that are subject to an aging management review are then identified and described in detail. These detailed descriptions identify related TLAAs and age-related degradation mechanisms. Finally, aging effects resulting from age-related degradation mechanisms are identified.

2.1 GENERAL DESCRIPTION AND BOUNDARY

The reactor internals assembly is part of the reactor coolant system (RCS) and is located inside the reactor vessel. The reactor internals are long-lived passive structural components in the RCS. A few of the subcomponents within the scope of this report are designed for replacement, as noted in the following descriptions of this section. The reactor internals intended function supports the RCS functions of core cooling, rod cluster control assembly (RCCA) insertion, and integrity of the fuel and pressure vessel boundary.

The support boundaries between the reactor internals and the reactor vessel is located at two distinct locations. The top support for the reactor internals occurs just below the reactor vessel mating surface to the head and is clamped. The lower support of the internals is guided at or near the vessel bottom head transition to the vessel straight shell.

Components of these assemblies are classified as either core support structures (CS) or internals structures (IS). These are American Society of Mechanical Engineers (ASME) Section III designations and are defined in Subsection NG of the Code. A core support structure provides support and restraint of the core. The internals structures are all other structures within the reactor pressure vessel (RPV) that are not core support structures, fuel assemblies, blanket assemblies, control assemblies, or instrumentation. The more stringent criteria of the CS classification have been applied to some of the IS components by the designer. The major components in each subassembly are:

Lower Internals Assembly

Lower core plate (LCP) and fuel alignment pins	CS
Lower support forging or casting	CS
Lower support column	CS
Core barrel	CS
Core barrel flange	CS
Radial support keys	CS
Baffle plates	CS
Former plates	CS

Core barrel outlet nozzles	IS
Neutron panel/thermal shield	IS
Irradiation specimen guide	IS
Secondary core support	IS
Bottom-mounted instrumentation (BMI) columns	IS
Head cooling spray nozzles	IS
Diffuser plate	IS
BMI flux thimbles	IS
Specimen plugs	IS

Upper Internals Assembly

Upper support assembly	CS
Upper core plate (UCP) and fuel alignment pins	CS
Upper support columns	CS
Control rod guide tubes and flow downcomers	IS
Upper instrumentation conduit and supports	IS
Mixing device	IS

There are components that form the interface between core supports and internals or core supports and vessel. These interface components are:

UCP alignment pins	CS
Internals holddown spring	IS
Head/vessel alignment pins	IS
Clevis inserts	IS
RCCA control rods	Driveline
Driverods	Driveline

Figures 2-1 and 2-2 show the major reactor internals components.

2.2 COMPONENTS OF THE REACTOR INTERNALS SUBJECT TO AN AGING MANAGEMENT REVIEW

The reactor internals perform the following intended functions:

- Provide the capability to shut down the reactor and maintain it in a safe shutdown condition
- Prevent failure of all nonsafety-related systems, structures, and components whose failure could prevent any of these functions
- Ensuring the integrity of the reactor coolant pressure boundary (bottom-mounted instrumentation flux thimbles only)

These component intended functions support the same RCS intended functions. In addition, since the bottom-mounted flux thimbles have been included in the scope of this report, the flux thimbles must ensure that the integrity of the reactor coolant pressure boundary is maintained. (Note that the inclusion of the flux thimbles in the scope of this report is arbitrary. They are the only pressure boundary component included here, and on a plant specific basis, could also be evaluated together with other pressure boundary components).

Specific functions can also be defined for the individual subcomponents comprising the reactor vessel internals as follows:

1. Provide support and orientation of the reactor core (i.e., the fuel assemblies).

2. Provide support, orientation, guidance, and protection of the control rod assemblies.

3. Provide a passageway for the distribution of the reactor coolant flow to the reactor core.

4. Provide a passageway for support, guidance, and protection for incore instrumentation.

5. Provide a secondary core support for limiting the core support structure downward displacement.

6. Provide gamma and neutron shielding for the reactor pressure vessel.

Table 2-1 provides a matrix of the reactor vessel internals intended function (by number) for each of the reactor internals subcomponents that specifically support each intended function.

The reactor internals components listed in Table 2-1 that perform an intended function in a passive manner and which are long-lived are subject to an aging management review (see Table 2-2).

2.3 DESCRIPTIONS

All Westinghouse reactor internals consist of two basic assemblies: an upper internals assembly that is removed during each refueling operation to obtain access to the reactor core, and a lower internals assembly that can be removed, if desired, following a complete core unload. The fact that all of the internals can be removed from the reactor vessel ensures the capability to perform periodic inspections to determine the condition of the internals or to effect repairs, if needed. This unique characteristic of all Westinghouse internals provides a means to determine the reactor internals functionality during the extended period of operation.

The lower internals assembly is supported in the vessel by clamping to a ledge below the vessel-head mating surface and closely guided at the bottom by radial support/clevis assemblies. The upper internals assembly is clamped at this same ledge by the reactor vessel head. The bottom of the upper internals assembly is closely guided by the core barrel alignment pins of the lower internals assembly.

There are three basic models of reactor internals in domestic WOG plants: two-loop, three-loop, and four-loop. There are variations within these categories, e.g., core lengths, ratings, support geometry, and material product forms. A designation can be made relative to the design of the upper support plate assemblies, i.e., 1) a deep beam model, 2) a top hat model, or 3) an inverted top hat model.

2.3.1 Lower Internals Assembly

The reactor core is positioned and supported by the lower internals and upper internals assembly. The individual fuel assemblies are positioned by fuel pins in the LCP and in the UCP. These pins control the orientation of the core with respect to the lower internals and upper internals. The lower internals are aligned with the upper internals by the UCP alignment pins and secondarily by the head/vessel alignment pins. The lower internals are orientated to the vessel by the lower radial keys and by the head/vessel alignment pins. Thus, the core is aligned with the vessel by a number of interfacing components.

The fuel assemblies are supported inside the lower internal assembly on top of the LCP. The LCP is elevated above the lower support forging by support columns and bolted to a ring support attached to the inside diameter (ID) of the core barrel. The support columns transmit vertical fuel assembly loads from the LCP to the much thicker lower support forging. The lower support forging is welded to and supported by the core barrel, which transmits vertical loads to the vessel through the core barrel flange. In the XL plants (14-foot core), the fuel assemblies are supported directly on the lower support forging.

The guidance and alignment of the lower assembly during insertion into the reactor vessel is provided by the vessel guide studs and the lower radial support keys and finally at the flange by the head/vessel alignment pins. The assembly is then supported by the core barrel flange that rests on the reactor vessel ledge. The holddown spring is positioned on top of the flange and holds the lower assembly down, resisting the flow uploads.1 Horizontal loads placed on the lower internals assembly are reacted at the flange-to-vessel interface and at the lower radial support system.

When the coolant enters the reactor vessel, it impinges on the side of the core barrel and is directed downwards through the annulus formed by the gap between the outside diameter (OD) of the core barrel and the ID of the vessel. The flow then enters the plenum area between the bottom of the lower core barrel assembly and the vessel and is redirected upward through the core. After passing through the core, the coolant enters the upper internals region, then radially out through the core barrel/reactor vessel outlet nozzles. A small amount of flow is directed into the reactor vessel head area by the head cooling spray nozzles and into the former region (area between the baffle plates and the inside diameter of the core barrel) for cooling of the baffle/former assembly. The perforations in the various components, such as the lower support

---

1 In the Haddam Neck plant, the upper support plate is positioned on top of the core barrel flange, and the holddown spring is on top of the upper support plate.

forging, the LCP, and diffuser plate, control and meter the flow through the core. Figure 2-3 presents a schematic of the major reactor pressure vessel flow paths.

2.3.1.1 Lower Core Plate (CS) and Fuel Alignment Pins

The functions of the LCP are to position and support the core and provide a metered control of reactor coolant flow into each fuel assembly.

The LCP is located near the bottom of the lower support assembly, inside the core barrel, and above the lower support forging. There are fuel pins, typically two per fuel assembly, attached to the core plate that position the fuel assemblies. The fuel assemblies are positioned over four flow holes per assembly that control the amount of flow entering each fuel assembly. The 304 stainless steel perforated plate is circular and is bolted at the periphery to a ring welded to the ID of the core barrel. The span of the plate is supported by lower support columns that are attached at their lower end to the lower support plate. At the core plate center, a removable plate is provided for access to the vessel lower head region.

The LCP is required to sustain loads from the following sources:

- Deadweight
  - Weight of core
  - Weight of LCP
  - Weight of upper internals assembly (percentage)
- Mechanical Loads
  - Fuel assembly spring forces
  - Control rod "scram" impact loads
- Hydraulic Loads
  - Full flow (mechanical design flow (MDF))
  - Pump overspeed
- Flow-Induced Vibration Loads
- Thermal Loads
  - Normal operation thermal transients
  - Upset condition thermal transients
  - Gamma heating
- Seismic
  - Operating basis earthquake (OBE)
  - Safe shutdown earthquake (SSE)
- Loss-of-Coolant Accident (LOCA)
- Handling Loads

The fuel alignment pins installed on the LCP engage the bottom nozzle of the fuel assembly. These pins provide the initial alignment of the fuel as the upper internals are lowered into place and react the lateral loads from the fuel assembly at the bottom nozzle. The alignment pins installed on the UCP also provide a means of aligning, locating, and maintaining the position of the top nozzles of the fuel assemblies. For some plants, the fuel alignment pins are an integral part of the fuel assembly.

2.3.1.2 Lower Support Forging or Casting (CS)

A function of the lower support forging or casting is to provide support for the core by reacting LCP loads transmitted through the lower support columns. The plate must direct coolant flow from the lower head plenum to the core region. Also, access to the vessel lower head region during field assembly and inservice inspection (ISI) is provided via a removable plate.

The lower support forging is attached with a full-penetration weld to the lower end of the core barrel. In this position it can provide uninterrupted support to the core. The core sets directly on the LCP, which is supported by the lower support columns that are attached to and extend above the lower support forging. There is a large-diameter removable plate that provides access to the lower head plenum. The other through-holes direct flow from the lower head to the lower plenum (the area between the LCP and lower support forging) and permit instrumentation guide columns to pass through the support. The 304 stainless steel perforated lower support forging is circular. On the outer periphery of the forging are radial support keys equally spaced that are welded into machined pockets. Four-loop plants have six radial supports, and three- and two-loop plants have four radial supports. The BMI assembly and secondary core support system are attached to the underside of the support forging. For some plants, a diffuser plate is clamped in place by the support columns between the LCP and lower support forging. A drawing of the lower support forging and attached assemblies is shown in Figure 2-4. Some four-loop plants employ a cast lower support instead of a forging. The functions, loads, and supporting hardware are the same except for dimensions. For XL plants, the LCP, diffuser plate, and lower support columns were eliminated, and the fuel assemblies are supported directly by the lower support forging.

The lower support forging is required to sustain loads from the following sources:

- Deadweight
  - Weight of core
  - Weight of LCP
  - Weight of lower support columns
  - Weight of diffuser plate
  - Weight of lower support forging
  - Weight of BMI
  - Weight of secondary core support
  - Weight of upper internals assembly (percentage)

- Mechanical Loads
  - Fuel assembly spring forces
  - Control rod "scram" impact loads
- Hydraulic Loads
  - Full-flow MDF
  - Pump overspeed
- Flow-Induced Vibration Loads
- Thermal Loads
  - Normal operation thermal transients
  - Upset condition thermal transients
  - Gamma heating
- Seismic
  - OBE
  - SSE
- LOCA
- Handling Loads

2.3.1.3 Lower Support Columns (CS)

The function of the lower support columns is to support the LCP and transmit the loads from the LCP to the much thicker and stiffer lower support forging. Some lower support columns also serve as a guide for the neutron flux thimbles.

The lower support columns separate the LCP and the lower support. The columns react the core loads acting on the LCP and transmit these loads to the lower support. The columns are attached with threaded fasteners to the LCP and a threaded joint to the lower support.

The lower support columns are required to sustain loads from the following sources:

- Deadweight
  - Weight of core
  - Weight of LCP
  - Weight of lower support columns
  - Weight of diffuser plate
  - Weight of upper internals assembly (percentage)
- Mechanical Loads
  - Fuel assembly spring forces
  - Control rod "scram" impact loads

- Hydraulic Loads
  - Full-flow MDF
  - Pump overspeed
- Flow-Induced Vibrational Loads
- Thermal Loads
  - Normal operation thermal transients
  - Upset condition thermal transients
  - Gamma heating
- Seismic
  - OBE
  - SSE
- LOCA
- Handling Loads

2.3.1.4 Core Barrel (CS)

The primary function of the core barrel is to support the core. Lateral support for the core is provided at the upper and lower core plate locations and at intermediate positions during a seismic and LOCA event. During a seismic and LOCA event, the core may impact the baffle/former assembly that is supported by the core barrel. In addition to the support requirement, the core barrel needs to provide a passageway for the reactor coolant flow. It directs the reactor coolant flow to the core, and after leaving the core it directs the flow to the outlet nozzles.

The core rests directly on the LCP that is ultimately supported by the core barrel. The LCP is attached at its periphery to the core barrel ID and supported by lower support columns that are attached to the lower support forging. The lower support forging is welded at its edge to the bottom end of the core barrel.

Four alignment pins located at 90-degree intervals are welded to the core barrel and engage the UCP. These pins restrain the lateral motion of the UCP. The baffle/former assembly is bolted to the core barrel and forms an outer envelope for the core. Attached to the core barrel or to the core barrel flange are the following:

- Baffle/former assembly
- Outlet nozzles
- Neutron panel assemblies or thermal shield
- Alignment pins, equally spaced around the circumference, that engage the UCP
- LCP
- Lower support forging

- Head-vessel alignment pins
- Specimen plugs
- Head cooling spray nozzles

The core barrel is required to sustain loads from the following sources:

- Deadweight
  - Weight of core
  - Weight of LCP
  - Weight of lower support columns
  - Weight of lower support
  - Weight of baffle/former assembly
  - Weight of core barrel
  - Weight of alignment pins
  - Weight of lower radial support (keys)
  - Weight of attached internal structures
  - Weight of upper internals assembly (percentage)

- Mechanical Loads
  - Holddown spring forces
  - Fuel assembly spring forces
  - Control rod "scram" impact loads

- Hydraulic Loads
  - Full-flow MDF
  - Pump overspeed

- Flow-Induced Vibrational Loads

- Thermal Loads
  - Normal operation thermal transients
  - Upset condition thermal transients
  - Gamma heating

- Seismic
  - OBE
  - SSE

- LOCA

- Handling Loads

2.3.1.5 Radial Keys and Clevis Inserts (CS)

The radial keys restrain large transverse motions of the core barrel but at the same time allow unrestricted radial and axial thermal expansions.

The lower core barrel is restrained laterally and torsionally by these uniformly spaced keys. The radial keys, along with the matching clevis inserts, are designed to limit the tangential motion between the lower end of the core barrel and the vessel. At assembly, as the internals are lowered into the vessel, the keys engage the keyways of the inserts in the axial direction. With this design, the core barrel is provided with a support at the farthest extremity and may be viewed as a beam fixed at the top and guided at the bottom. With the radial key and inserts, the radial and axial expansions of the core barrel are accommodated but circumferential movement (i.e., rotation) of the core barrel is restricted. The radial keys are attached to the core barrel at the lower support forging level.

The inserts are attached to the clevis that is welded to the vessel. The thickness of the clevis inserts are customized to have the optimum gap sizes. The contact surfaces on the radial keys are surface-hardened to increase their wear resistance.

The design loadings for the radial keys and the clevis inserts are as follows:

- Vibratory loads, in the circumferential direction, during normal operation
- Steady-state interference loads in the circumferential direction
- Frictional, vertical force due to differential thermal growth between the core barrel and the vessel
- Frictional, radial force due to differential thermal growth between the core barrel and the vessel
- Dynamic insertion load (momentary)
- Seismic loads in the circumferential direction
  - OBE
  - SSE
- LOCA loads in the circumferential direction

The configuration of the radial keys and the matching clevis inserts is shown in Figure 2-5.

2.3.1.6 Baffle and Former Assembly (CS)

The baffle and former assembly is made up of vertical plates called baffles and horizontal support plates called formers. The baffle plates are bolted to the formers by the baffle/former bolts, and the formers are attached to the core barrel ID by the barrel/former bolts.

The baffle/former assembly forms the interface between the core and the core barrel. The baffles provide a barrier between the core and the former region so that a high concentration of flow in the core region can be maintained. A secondary benefit, although not a requirement of the baffles, is to reduce the neutron flux on the vessel.

The baffle and former assembly also provides lateral support for the core during a seismic or LOCA event.

The baffle and former assembly is attached to the ID of the core barrel. It extends the full length of the core and follows the peripheral contour of the core. This restricts most of the coolant flow to the core area by keeping the flow out of the former region. The formers, which are bolted on their outer diameter to the core barrel ID, position and provide structural support for the baffle plates.

Note that the baffle plates are also bolted to each other at selected corners by edge bolts or brackets; however, the edge bolts/brackets do not perform an intended function, so they are not included in the aging management evaluation.

The baffle/former assembly is required to sustain loads from the following sources:

- Deadweight
  - Weight of baffle/former assembly
- Mechanical Loads
  - Bolt preloads
- Hydraulic Loads
  - Full-flow MDF
  - Pump overspeed
- Flow-Induced Vibrational Loads
- Thermal Loads
  - Normal operation thermal transients
  - Upset condition thermal transients
  - Gamma heating

- Seismic
  - OBE
  - SSE
- LOCA
- Handling Loads

A representative baffle and former assembly is shown in Figure 2-6.

2.3.1.7 Core Barrel Outlet Nozzle (IS)

The function of the core barrel outlet nozzles is to direct the reactor coolant, after it leaves the core, radially outward through the reactor vessel outlet nozzles. The core barrel outlet nozzles are located in the upper portion of the core barrel directly below the flange and are attached to the core barrel, each in line with a vessel outlet nozzle. A small amount of bypass leakage may occur in the gap between the core barrel outlet nozzle face and the vessel outlet nozzle land. The nozzles extend radially from the core barrel to the ID of the vessel and are customized during manufacture to minimize this gap. The size of the gap reduces during heatup and may go to a small interference at operating temperatures. This component is classified as an internal structure, since it does not provide support for the core.

2.3.1.8 Neutron Panels/Thermal Shield (IS)

Additional neutron shielding of the reactor vessel is provided in the active core region by neutron panels or thermal shields that are attached to the outside of the core barrel. Neutron panels are attached to the OD of the core barrel at strategically located positions to reduce the fluence on the reactor vessel welds. The thermal shield design provides shielding for the complete 360-degree circumferential sector. It is fastened with bolts and dowels below the outlet nozzles and also near the lower portion of the core barrel with flexures. One plant, Haddam Neck, has removed the thermal shield.

2.3.1.9 Irradiation Specimen Guide (IS)

Specimen guides that contain specimens, for determining the irradiation effects of the vessel during the life of the plant, are attached to the neutron panels/thermal shields. These specimens, which are field-installed, are vessel material surveillance samples that are to be exposed to irradiation during reactor operation. At specific intervals during the design life of the reactor, a specimen will be removed from the container and the material samples will be tested to determine the irradiation effects on the reactor vessel.

2.3.1.10 Secondary Core Support (IS)

The function of the secondary core support, following a postulated failure and downward displacement of the core barrel subassembly, is to:

- Absorb a portion of the energy generated by the displacement and limit the force imposed on the vessel
- Transmit and distribute the vertical load of the core to the reactor vessel
- Limit the displacement to prevent withdrawal of the control rods from the core
- Limit the displacement to prevent loss of alignment of the core with the upper core support to allow the control rods to scram

The secondary core support is provided in the plenum area between the bottom of the core barrel subassembly and the bottom of the reactor vessel. (Note that this assembly is an internal structure even though the core support nomenclature is used.) To prevent the control rods from being withdrawn and limit the load to the vessel, the system is designed to absorb this potential energy from the vertical displacement in the minimal distance. A curved bearing plate attached to the bottom of the energy absorber distributes these loads to the vessel. The support system comprises four support columns bolted at one end to the underside of the lower support forging and bolted at the bottom to an energy absorbing device. Each energy absorber is made up of three concentric cylinders, one of which is a custom-machined cylinder designed to absorb the potential energy of the lower internals assembly and the core. The four energy absorbers are seated in a base plate that is contoured to the approximate shape of the lower head.

2.3.1.11 Bottom-Mounted Incore Instrumentation Columns (IS) and Flux Thimbles

The functions of these columns are to provide a path for the flux thimbles into the core from the bottom of the vessel and to protect the flux thimbles during the operation of the reactor. There are two types of bottom-mounted incore instrumentation columns. The cruciform columns extend through the flow holes of the lower support forging and attach to the bottom of the LCP. The standard guide columns line up with the lower support columns and are bolted to the bottom side of the lower support. These are line-drilled to provide a flux thimble path, and the lower end of the column is counterbored to fit over the vessel conduit penetration. This provides an uninterrupted, protected path for flux thimbles entering the reactor core.

The flux thimble is a long, slender stainless steel sealed tube that passes through the vessel penetration, through the lower internals assembly, and finally extends to the top of the fuel assembly. The flux thimble provides a path for the neutron flux detector into the core and is subjected to reactor coolant pressure and temperature on the outside surface and to atmospheric conditions on the inside.

The flux thimbles remain stationary during reactor operation, with the bullet end of the thimbles positioned slightly above the top of the active fuel. For refueling, the thimbles are retracted to a point where the bullet tip is below the LCP. For the removal of the lower internals assembly, the flux thimbles are pulled out further until the bullet tip is outside of the reactor vessel.

2.3.1.12 Diffuser Plate (IS)

To enhance flow uniformity entering the LCP, some plants employ an additional orifice plate called a diffuser plate. This plate is clamped in place by the lower support columns between the LCP and lower support plate.

2.3.1.13 Head Cooling Spray Nozzles (IS)

Head cooling spray nozzles (HCSNs) are used to adjust the upper plenum coolant temperature by allowing bypass flow at the vessel inlet temperature from the vessel/core barrel downcomer region to flow directly into the upper head plenum. Several different designs evolved, so the exact configuration would depend on the production date.

The latest design employs tubes welded to the core barrel flange. These tubes extend through openings in the upper support plate at a diameter outside of the holddown spring. The tubes are fitted with an adjustable orifice. The orifice is threaded and crimped in place.

Other designs were similar, except they did not have an orifice attachment and directed a smaller portion of the bypass flow (inlet) to the upper head, leading to higher bulk average upper head temperatures.

2.3.2 Upper Internals Assembly

During reactor operation, the upper internals assembly is preloaded against the fuel assembly springs and the internals holddown spring by the reactor vessel head pressing down on the outside edge of the upper support plate. As described in Subsection 2.3.1, for the Haddam Neck plant, the reactor vessel head preloads the internals holddown spring directly.

The upper support plate acts as the divider between the upper plenum and the upper head and as a rigid base for the rest of the upper internals components. From the upper support plate, the upper support columns and the guide tubes are attached. The UCP, in turn, is attached to the upper support columns.

The UCP is perforated to permit coolant to pass from the core into the upper plenum defined by the upper support plate and the UCP. The coolant then exits through the outlet nozzles in the core barrel. The UCP positions and laterally supports the core by fuel pins extending below the plate. The UCP contacts and preloads the fuel assembly springs and thus maintains contact of the fuel assemblies with the LCP during reactor operation.

The upper support columns vertically position the UCP and are designed to take the uplifting hydraulic flow loads and fuel spring loads on the UCP. Plants that use the larger-diameter columns have slots on the columns to allow coolant exiting from the fuel assemblies to enter the column and exit from the slotted holes. Mixing devices on some plants are provided on the UCP and also at the bottom of the upper support columns at the thermocouple locations. The guide tubes are bolted to the upper support plate and pinned at the UCP so they can be more easily removed if replacement is desired. The guide tubes are designed to guide the control

rods in and out of the fuel assemblies to control power generation. The guide tubes are also slotted in their lower sections to allow coolant exiting from the core to flow into the upper plenum.

The upper instrumentation columns are bolted to the upper support plate. These columns support the thermocouple guide tubes that lead the thermocouples from the reactor head into the upper plenum to just above the UCP. In several plants, the thermocouples are combined with the BMI.

2.3.2.1 Upper Support Plate Assembly (CS)

The upper support plate assembly is a rigid base that positions and supports the guide tubes and the upper support columns that, in turn, position and support the UCP. The upper support plate also positions and supports the thermocouple columns and guides. There are three models of upper support plate assemblies: (1) a deep beam, (2) top hat, and (3) an inverted top hat.

The upper support plate assembly is part of the upper internals assembly and is shown in Figure 2-7. The assembly consists of a perforated plate that is reinforced underneath by a stiffener ring and a deep beam structure.

During reactor operation, the upper support plate is preloaded, on its periphery, by the core holddown spring against the vessel head flange. For all Westinghouse domestic plants except Haddam Neck, the holddown spring rests on the core barrel flange, which prevents the lower internals as well as the upper internals from shifting due to flow forces. Because of the stiffener ring and the deep beam structure underneath the upper support plate, the upper support plate assembly is a stiff structure in the axial direction. In the Haddam Neck plant, the holddown spring rests on the upper support plate, which rests on the core barrel flange.

The upper support plate assembly is designed to sustain loads from the following sources:

- Deadweight
  - Weight of guide tubes
  - Weight of upper support columns
  - Weight of UCP
  - Weight of upper instrumentation columns
  - Weight of the mixing devices
- Mechanical Loads
  - Fuel assembly holddown spring forces
  - Core holddown spring forces
- Hydraulic Loads
  - Full-flow MDF
  - Pump overspeed

- Flow-Induced Vibration Loads

- Thermal Loads
  - Normal operation thermal transients
  - Upset condition thermal transients

- Seismic
  - OBE
  - SSE

- LOCA

- Handling Loads

2.3.2.2 Upper Core Plate (CS)

The UCP positions the upper ends of the fuel assemblies and the lower ends of the control rod guide tubes, thus serving as the transition member for the control rods in entry and retraction from the fuel assemblies. It also controls coolant flow when it exits from the fuel assemblies and serves as a boundary between the core and upper plenum.

The UCP is restrained from vertical movement by the upper support columns, which are attached to the upper support plate. The lateral movement is restrained by four alignment pins at each of the four major reactor axes. These pins are welded to the core barrel and interface with the core plate through core plate inserts, which are customized at manufacture. On the bottom side of the UCP, there are fuel pins (two for each fuel assembly) for positioning and supporting the fuel assemblies. These pins in the XL model (14-foot core) are integral with the fuel assemblies.

The UCP assembly is designed to sustain loads from the following sources:

- Deadweight
  - Weight of UCP
  - Weight of flow mixers

- Mechanical Loads
  - Fuel assembly holddown spring forces

- Hydraulic Loads
  - Full-flow MDF
  - Pump overspeed

- Flow-Induced Vibration Loads

- Thermal Loads
  - Normal operation thermal transients
  - Upset condition thermal transients
  - Gamma heating

- Seismic
  - OBE
  - SSE

- LOCA

- Handling Loads

2.3.2.3 Upper Support Column (CS)

The upper support columns perform the following functions:

- Preload fuel assembly and react fuel assembly forces

- Serve as separation members for the upper support plate and UCP in formation of the core outlet plenum

- Position, guide, and support the thermocouples for core outlet water temperature measurement including housing flow-mixing devices

The upper support column is required to sustain loads from the following sources:

- Deadweight
  - Weight of upper support columns
  - Weight of UCP
  - Weight of mixing devices

- Mechanical Loads
  - Fuel assembly holddown spring forces transmitted through the UCP

- Hydraulic Loads
  - Full-flow MDF
  - Pump overspeed

- Flow-Induced Vibration Loads

- Thermal Loads
  - Normal operation thermal transients
  - Upset condition thermal transients

- Seismic
  - OBE
  - SSE
- LOCA
- Handling Loads

2.3.2.4 Guide Tube (IS)

The guide tubes (GTs) are bolted from the top of the upper support plate and are supported at their lower end to the UCP with spring-type pins.

The GTs perform the following functions:

- Provide a straight low-friction path for the control rods into or out of the fuel assemblies.
- Provide sufficient protection for the control rods when they are withdrawn from the fuel elements to prevent damage due to parallel and lateral coolant flow.
- Provide a convenient, safe storage place for the control rod drive lines during refueling.

The GTs must be of sufficient strength to withstand both the dynamic and static loads imposed by the reactor coolant flow for both steady-state and transient operation. The GTs must also withstand loads imposed during accident conditions. In the event of a damaged drive line or stuck rod, the GTs must be easily removable and replaceable without damage to reactor internals structure.

Each GT consists of two or three individual welded assemblies depending on the model. A removable insert at the top of the GT is held in place by flexures in 14x14 and 15x15 plants. The insert acts as a flow restrictor around the drive shaft to minimize bypass flow into the head plenum. The insert should be removable to allow removal of the control rod drive mechanism (CRDM) drive shaft during refueling when necessary. A replacement design (known as a flexureless insert), developed and implemented for these plants, eliminates the flexures and provides all of the necessary functions of flow restriction, removability, and guidance of the drive rod during refueling operations.

The GTs are not designed to sustain any axial loads except for the control rod "scram" and stepping load. The GTs will experience loads from the following sources:

- Deadweight
  - Weight of GT
- Mechanical Loads

- Hydraulic Loads
  - Hydraulic cross-flow loads exiting through the outlet nozzle
- Flow-Induced Vibration Loads
  - Pump-induced pressure loads
- Thermal Loads
  - Normal thermal transients
  - Upset condition thermal transients
- Seismic Loads
  - OBE
  - SSE
- LOCA
- Handling Loads

2.3.2.5 Upper Instrumentation Column (IS)

The upper instrumentation columns provide a passageway and cross-flow protection to the conduits that, in turn, house the thermocouples. The thermocouples are inserted into the top of the upper instrumentation columns and are routed down through the inside of various support columns. The ends of the thermocouples protrude below the upper support columns so that the temperature of the coolant exiting the fuel assemblies can be measured.

2.3.2.6 Mixing Device (IS)

Mixing devices are used with thermocouples to enhance the temperature reading at the core outlet just above the UCP in 14x14 and 15x15 cores. In later plants, those using 17x17 and for the 16x16 cores that converted to the inverted upper support structure, the mixing devices were not used.

The mixing devices are cast cylinders with four vanes cast on the inside. They are located individually on the UCP or full penetration-welded to the upper support columns at all thermocouple locations. They sustain the same loads as the upper support columns except when individually attached to the UCP.

2.3.3 Interfacing Components

The general requirements of the interfacing components are to orient adjacent components with respect to each other and/or provide support for an adjacent component. These components are the lower internals assembly, the upper internals assembly, the fuel and driveline, or the reactor vessel. The UCP alignment pins position the UCP with respect to the lower internals

assembly and provide lateral support to the lower end of the upper internals assembly. The holddown spring supports the upper internals assembly and holds the lower internals assembly down. The head and vessel alignment pins align the lower internals assembly and the upper internals assembly with the vessel. The radial support inserts provide a support surface for the radial support keys.

In addition, there is the driveline interface consisting of the fuel assemblies, control rods, drive rod, GT, and drive mechanism. The drive mechanism and fuel assembly components are not in the scope of this report.

2.3.3.1 Upper Core Plate Alignment Pin

The UCP alignment pins locate the UCP laterally with respect to the lower internals assembly. The pins must laterally support the UCP so that the plate is free to expand radially and move axially during differential thermal expansions between the upper internals and the core barrel.

The UCP alignment pins are the interfacing components between the UCP and the core barrel. The UCP alignment pins are shrunk-fit and welded into the core barrel and the core barrel bearing pad. The gap sizes between the alignment pins and the matching inserts are customized.

The design loads for the UCP alignment pins are as follows:

- Vibratory loads, in the circumferential direction, during normal operation
- Steady interference loads in the circumferential direction
- Frictional, vertical force due to differential thermal growth between the core barrel and the UCP
- Frictional, radial force due to differential thermal growth between the core barrel and the UCP
- Dynamic insertion load (momentary)
- Seismic loads in the circumferential direction
  - OBE
  - SSE
- LOCA loads in the circumferential direction

2.3.3.2 Holddown Spring

The holddown spring provides a preload to limit the axial motion of the upper and lower internals assemblies and to prevent the liftoff of the core barrel flange from the vessel ledge.

The spring preload also reduces the lateral motion of the upper support plate flange and the core barrel flange. The holddown spring is required to be designed for operating condition loads.

The holddown spring, which is a circumferential spring with an essentially rectangular cross-section, is located between the flanges of the upper support plate and the core barrel. The holddown spring is preloaded by a compressive force when the reactor vessel head is clamped in place with the reactor vessel closure studs and nuts. Therefore, the holddown spring is an interfacing component between the upper internals assembly and the lower internals assembly. The holddown spring is normally left with the lower internals during refueling. In the case of one plant, Haddam Neck, this spring is located on top of the upper internals assembly, but functions in the same manner. During refueling at Haddam Neck, this spring is removed.

The holddown spring is designed for the following loading conditions:

- Spring preload force
- Loads from relative movement of flanges
- Flow loads
- Various thermal transients
- OBE seismic loads

2.3.3.3 Head and Vessel Alignment Pins

The head and vessel alignment pins align the upper and lower internals assemblies with respect to the vessel. The head-vessel alignment pins are located at the outside periphery of the core barrel flange at the four major axes. A portion of the pin extends below the core barrel flange and engages pockets in the reactor vessel to provide alignment of the lower internals assembly with respect to the vessel.

Similarly, a portion of the pin extends above the flange and aligns the upper internals assembly with respect to the vessel. This portion of the pin engages pockets in the reactor vessel head, thus establishing an alignment of lower internals, reactor vessel, upper internals, and reactor vessel head. Minimal clearance is maintained between the pins and the engagement pockets to ensure functional alignment and to allow ease of assembly. The clearances are designed to prevent thermal loads in the pins during temperature excursions and to reduce the stress in the pins during horizontal loading of the upper internals.

2.3.3.4 Radial Keys and Clevis Inserts

The radial keys and clevis inserts provide the interface between the lower internals and the vessel. They are discussed in Subsection 2.3.1.5.

2.3.3.5 Driveline Components

The driveline comprises the drive rod and control rod, which make up the interface between the drive mechanism on the reactor head and the GT and fuel.

The drive rod couples to the top of the control rod spider and is made up of three major sub-assemblies: (1) the drive rod that has a series of zero-pitch grooves on a 3/8-inch or 5/8-inch spacing, (2) a latching/unlatching mechanism, and (3) the coupling at the lower end. It is housed inside the GT and is vertically withdrawn by the CRDM called a "Mag-Jack" mechanism attached to the reactor head penetration. This provides a vertical stepping motion to the control rod in either direction. The drive rod can be "scrammed" by disengaging the CRDM. The drive rod assembly is subjected to dynamic loading and wear.

During refueling, the drive rod is decoupled from the rod cluster control (RCC) and housed in the GT. The XL plants have the capability of borating the core and withdrawing the RCC into the GT, instead of decoupling.

The control rod referred to as the RCC or RCCA is made up of a number of individual stainless steel rods housing an absorber material made of silver-indium-cadmium, boron carbide, or hafnium. The number of rods varies with the fuel assembly lattice. The rods extend to cover the active fuel and to the top nozzle where they engage a "spider."

The spider is made up of vanes with pods where the individual absorber rods attach. The vanes are welded and braised to the spider body, which is engaged by the drive rod.

The RCC regulates reactor power by stepping up or down or by scramming, which produces a rapid shutdown. The design loadings are:

- Mechanical due to stepping
- Vibratory, mechanical, and hydraulic
- Pressure–static and dynamic
- Neutron exposure
- Frictional
- Seismic
- LOCA
- Dynamic insertion due to scram
- Handling

2.4 ENGINEERING AND DESIGN DATA

2.4.1 Codes, Standard, and Regulation Bases

2.4.1.1 General Design Background

Before the development of ASME Code requirements specifically applicable to reactor internals, the design of reactor internals components used Section III of the ASME Boiler and Pressure

Vessel Code, Subsection NB, as a guideline for the development and establishment of internals system design criteria. Ultimately, these criteria were used in the development of Subsection NG, which was first published in 1974. Allowable stresses were established consistent with structural components that later received United States Nuclear Regulatory Commission (U.S. NRC) concurrence and were adopted by ASME. The fatigue rules have exerted the greatest influence on component design along with industry-established materials behavior in a radiation and reactor chemistry environment. A subsequent development was the evaluation of all reactor internals systems for seismic loading and the asymmetric loads resulting from a postulated pipe rupture.

Material specifications, fabrication practices, and examination requirements followed established industry practices in place for Subsection NB components. In addition, to qualify for a code stamp, the ASME Code requires certain administrative rules for certification, documentation, filing, reports, and storage that were not the same as provided for the noncode plants. This does not imply that one quality control program was superior to the other; only that they differed.

Pressurized water reactor (PWR) internals whose contract dates follow the issuance of the 1974 Edition of the ASME Boiler and Pressure Vessel Code, Section III and reference Subsection NG, are designed and constructed to satisfy Subsection NG, Core Support Structures. The rules for the elevated temperature service of metals whose temperatures locally exceed the ASME Section III allowables are in Code Case N-201 and are applied at these local regions [Ref. 4].

2.4.1.2 Internals Load Categorization

The reactor internals systems are designed to withstand steady-state and fluctuating forces produced under handling, normal operating, transient, and accident conditions. The types of forces considered are deadweight, mechanical loads, hydraulic loads, flow-induced vibration, thermal loads, seismic loads, LOCA loads, and handling loads. The stresses resulting from these loads were determined analytically, or in some cases, experimentally. The stresses are categorized and compared against established allowable stresses. The ASME Code refers to this categorization as a "Hopper Diagram."

In the 1974 Edition of ASME Section III, Subsection NG, there are four categories titled:

- Normal conditions
- Upset conditions
- Emergency conditions
- Faulted conditions

Later code editions clarified this nomenclature but basically retained the same stress allowables. The corresponding new categories are:

- Service level A
- Service level B

- Service level C
- Service level D

In addition, there are design requirements imposed by the reactor internals system designer, such as limiting deformation of various components. These requirements are usually stated in the supplier's design specification, design report, and the final safety analysis report (FSAR). Maximum deflections are established for the core barrel (upper), the RCCA guide tube, and the UCP.

The following ASME Code limitations on stresses or deformations are required to ensure a safe and orderly reactor shutdown in the event of an earthquake and major loss-of-coolant incident loading conditions:

- Under normal operating loading plus OBE forces, the core support structures are designed within the stress criteria, upset or service level B, established in ASME Section III, Subsection NG.

- Under normal operating loadings plus reactor coolant pipe rupture loadings plus SSE forces, the core support structures are designed within the stress criteria, faulted or service level D, established in ASME Section III, Subsection NG that may result in gross plastic distortion and may cause the component to be removed from service.

2.4.1.3 Fatigue Evaluation

Metal fatigue produced by cyclic loading is a major consideration in the design of reactor internals. Because it is not only a significant potential degradation mechanism, but is also a degradation mechanism whose effects are cumulative, a fatigue assessment program to justify component life extension is a necessary part of a license renewal program. As previously noted, the newer reactor internals were designed to the fatigue rules contained in Section III, Subsection NG of the ASME Code. Prior to the existence of Subsection NG, designers generally used Subsection NB as a guide.

Conventional design procedures for structural components subjected to fluctuating loads use a design fatigue curve that plots stress (S) versus the number of cycles-to-failure (N). The S-N curve characterizes the unnotched fatigue properties of the material. The fatigue usage factor (U) is defined by Miner's Rule as the summation over the total number of transients, x, of the ratio of expected stress cycles (ni) to the allowable number of cycles (Ni for each transient, i):

$$U = \sum_{i=1}^{x} \frac{n_i}{N_i}$$

For ASME Code acceptance, the usage factor, U, cannot exceed unity (1.0) during the lifetime of the component.

2.5 TIME-LIMITED AGING ANALYSES

TLAAs are those licensee calculations that:

- Involve the effects of aging
- Involve time-limited assumptions defined by the current operating term, for example, 40 years
- Involve systems, structures, and components within the scope of license renewal
- Involve conclusions or provide the basis for conclusions related to the capability of the system, structure, or component to perform its intended functions
- Were determined to be relevant by the licensee in making a safety determination
- Are contained or incorporated by reference in the current licensing basis

Based on the description of the engineering and design of the reactor internal components, the only TLAA satisfying all six criteria from the license renewal rule listed above is fatigue.

2.5.1 Fatigue

Fatigue is defined as the structural deterioration that can occur as the result of repeated stress/strain cycles caused by fluctuating loads and temperatures. After repeated cyclic loading of sufficient magnitude, microstructural damage can accumulate, leading to macroscopic crack initiation at the most highly affected locations. Subsequent mechanical or thermal cyclic loading can lead to growth of the initiated crack.

The design bases for many PWR internals components included fatigue evaluations, both for those designed to the ASME Code Section III, Subsection NG and those earlier plants that used the ASME Code as a guideline for design. Only plants designed after the incorporation of Subsection NG in 1974, i.e., Callaway, Wolf Creek, and South Texas Units 1 and 2, have complete fatigue analyses of component low-cycle and high-cycle fatigue usage documented in a plant-specific "ASME Stress Report." All other domestic WOG plants were designed before the incorporation of Subsection NG and therefore do not have a plant-specific "ASME Stress Report."

2.5.2 Industry and Regulatory Actions on Fatigue

Since late 1991, there has been much attention given to the issue of fatigue qualification for nuclear power plants.

The Commission has decided that the adequacy of the code of record relating to metal fatigue is a potential safety issue to be addressed by the current regulatory process for operating reactors (Refs. 48 and 49). The effects of fatigue for the initial 40-year initial reactor license

period were studied and resolved under Generic Safety Issue (GSI)-78, "Monitoring of Fatigue Transient Limits for Reactor Coolant System," and GSI-166, "Adequacy of Fatigue Life of Metal Components" (Ref. 50). GSI-78 addressed whether fatigue monitoring was necessary at operating plants. As part of the resolution of GSI-166, an assessment was made of the significance of the more recent fatigue test data on the fatigue life of a sample of components in plants where Code fatigue design analysis had been performed. The efforts on fatigue life estimation and ongoing issues under GSI-78 and GSI-166 for 40-year plant life were addressed separately under a staff generic task action plan (Refs. 51 and 52). The staff documented its completion of the fatigue action plan in SECY-95-245 (Ref. 53).

SECY-95-245 was based on a study described in NUREG/CR-6260, "Application of NUREG/CR-5999 Interim Fatigue Curves to Selected Nuclear Power Plant Components" (Ref. 54). In NUREG/CR-6260, sample locations in the plant with high fatigue usage were evaluated.

Conservatism in the original fatigue calculations, such as actual cycles versus assumed cycles, were removed and the fatigue usage was recalculated using a fatigue curve considering the effects of the environment. The staff found that most of the locations would have a CUF of less than the ASME Code limit of 1.0 for 40 years. On the basis of the component assessments, supplemented by a 40-year risk study, the staff concluded that a backfit of the environmental fatigue data to operating plants could not be justified. However, because the staff was less certain that sufficient excessive conservatism in the original fatigue calculations could be removed to account for an additional 20 years of operation for renewal, the staff recommended in SECY-95-245 that the samples in NUREG/CR-6260 should be evaluated considering environmental effects for license renewal. GSI-190, "Fatigue Evaluation of Metal Components for 60-year Plant Life," was established to address the residual concerns of GSI-78 and GSI-166 regarding the environmental effects on fatigue on pressure boundary components for 60-years of plant operation.

The scope of GSI-190 included design basis fatigue transients, studying the probability of fatigue failure and its effect on core damage frequency (CDF) of selected metal components for 60-year plant life. The study showed that some components have cumulative probabilities of crack initiation and through-wall growth that approach unity within the 40- and 60-year period. The maximum failure rate (through-wall cracks per year) was in the range of 10 -2 per year, and those failures were generally associated with high cumulative usage factor locations and components with thinner walls, i.e., pipes more vulnerable to through-wall cracks. In most cases, the leakage from these through-wall cracks is small and not likely to lead to core damage. Based on the results of probabilistic analyses, along with the sensitivity studies performed, the interactions with the industry (NEI and EPRI), and different approaches available to the licensees to manage the effects of aging, it was concluded that no generic regulatory action is required, and that GSI-190 is resolved (Refs. 55 and 56). However, the calculations supporting resolution of this issue, which included consideration of environmental effects, and the nature of age-related degradation indicate the potential for an increase in the frequency of pipe leaks as plants continue to operate. Thus, the staff concluded that licensees must address the effects of coolant environment on component fatigue life as aging management programs are formulated in support of license renewal.

2.6 OPERATING AND MAINTENANCE HISTORY

This section identifies industry operating experience that contributes to the identification and understanding of system, structure, and component (SSC) failures and relevant degradation mechanisms.

The history of commercial PWR internals in the United States is one of safe, relatively trouble-free operation. There have been no instances to date in which Westinghouse reactor internals degradation resulted in a threat to public safety. In those cases where degradation occurred, it was identified, evaluated and, if necessary, repaired well before any potential safety issue arose. Furthermore, there were no failures in the WOG plants of components categorized in the (CS) classification.

Nevertheless, there have been instances of internals degradation that are considered significant. Even though these cases of degradation were not permitted to develop to the point of becoming actual safety issues, some resulted in large economic penalties.

It should also be recognized that a historical review is limited in the extent to which it is capable of defining issues relative to license renewal. Almost by definition, a historically relevant issue is one that has been addressed, and has therefore been reviewed in considerable depth. In many cases, repairs and/or modifications were implemented that eliminated some issues as concerns and resulted in design improvements in others. Because of these considerations, the conclusion of each subsection contains a brief discussion of the relevance of the issues defined to license renewal as well as the aforementioned discussions of safety and economic implications.

2.6.1 Thermal Shields

In the earlier PWRs, a number of incidents occurred indicating that thermal shields and their support system could be vulnerable to the high flow forces in the vessel-core barrel downcomer. Westinghouse, Combustion Engineering (CE), and Babcock and Wilcox (B&W) responded to these experiences in different ways. In the case of Westinghouse, the approach taken was to perform modifications of existing thermal shield designs to make them more vibration-resistant, and also to embark on a program to develop advanced thermal shield designs for future plants. In many CE plants, thermal shields were eliminated, either after problems were experienced or to preclude their occurrence. Difficulties with B&W thermal shields have generally been addressed by repair and modification.

The differences among the various thermal shield designs make a general assessment of their performance difficult. However, operating performance improved as new designs came on-line, and these make up the bulk of the plants in operation or under construction. In Westinghouse plants alone, there are four basic types of thermal shields, only the earliest two of which have shown significant degradation potential. None of the operating Westinghouse domestic plants use the two earliest designs. Due to this variation, the following experience summaries identify the thermal shield design employed as well as the vendor. The design categories are as follows:

Thermal Shield Designs

Westinghouse Type 1: This design consists of a full cylinder comprising three or four circular segments held together by pins and bolts. These shields are not attached to the core barrel but rest freely on lugs welded to the reactor vessel and are slotted at the support locations to limit rotational movement. Yankee Rowe, Trino-Vercillese (foreign), and Sena-Chooz (foreign) use this design. These plants are no longer in operation.

Westinghouse Type 2: This design is a complete cylinder with full-penetration welding, bolted and doweled to cylindrical support blocks that are attached to the bottom of the core barrel via a circumferential groove, dowel pin, and bolt assembly. Limiter keys at a higher elevation also restrain lateral motion. A preoperational modification was the use of flexures that are welded to the top of the shield and bolted and pinned to the core barrel. San Onofre 1 and Haddam Neck use this type design. The former is no longer in operation. The latter has removed the shield.

Westinghouse Type 3: This design is also a complete cylinder with full-penetration welding whose support system is the reverse of the type 2 design; that is, the support blocks are at the top of the thermal shield and the flexures, which restrain lateral motion but are flexible axially, are located at the bottom. The first online plant to use this design was Robert E. Ginna.

Westinghouse Type 4: This design does not employ a complete cylinder but instead uses cylindrical segments whose azimuthal extent is limited to regions of high neutron flux. These segments are bolted to the core barrel and are called "neutron pads" rather than thermal shield. The first plant to use this design was Trojan.

Combustion Engineering: This design does not clamp the thermal shield to the core barrel. Instead, circumferentially located support pins are fitted and welded into the upper portion of the thermal shield. These pins are slotted to allow them to rest on support lugs that are welded to the core barrel to provide axial support. Positioning pins that are just below the support lugs and circumferentially distributed around the bottom of the thermal shield provide radial restraint.

Babcock and Wilcox: This design is supported at the top with bolted restraints. The lower end is shrunk-fit on the lower grid flange and bolted.

The dominant degradation mechanisms in thermal shields are flow-induced vibration or high-cycle fatigue and intergranular stress corrosion cracking (SCC), with mechanical wear as both a consequence of and contributor to the former. Furthermore, these degradation events appeared predominantly in the earliest thermal shield designs. In many of the cases cited, the degraded components are fasteners and thermal shield support structures, not the thermal shield itself. The only reported cases of significant damage to the thermal shield itself and to the core barrel are those of St. Lucie and Millstone 2, plants of similar design.

The only domestic Westinghouse plants that have had significant thermal shield degradation are Yankee Rowe, Haddam Neck, and San Onofre 1. Yankee Rowe has a type 1 thermal shield design and the other two have the type 2 design. The only reported instance of degradation in a type 3 design is a single bolt failure at Beaver Valley 1, which is considered to

be an anomaly. There were no failures associated with the type 4 neutron pad design. This design and the type 3 thermal shield design are used in all of the Westinghouse domestic plants in operation. One other Westinghouse domestic plant in operation, Haddam Neck, removed the thermal shield.

With any of the thermal shield designs described above, the consequences of failure are economic, not safety-related. For instance, in the unlikely event that a thermal shield became dislodged and dropped, the primary threats to operation would be outage time and personnel exposure obtained in removing the internals and performing the repair. For the two plants with the Westinghouse type 2 design, Haddam Neck and San Onofre 1, studies showed that even a dropped thermal shield would not result in a significant flow blockage and would not therefore affect core coolability following a LOCA.

The time from the beginning of degradation (e.g., a single bolt fracture) to an amount of degradation that is considered significant (e.g., when the thermal shield begins impacting other components), generally extends over several refuelings. Therefore, an appropriate surveillance and ISI program would ensure discovery of any degraded condition.

2.6.2 Fasteners – Threaded and Pinned

There are many mechanical/structural joints used in all PWR suppliers' designs. Generally, the joints are made up of threaded fasteners and pins that perform necessary functions in securing tight joints that can withstand the operating and accident forces experienced in the reactor. Due to the variety of fasteners used in reactor internals, this section considers fasteners as a generic category.

Joint degradation in the industry occurred predominantly in core barrels, baffle/former assemblies, thermal shields, surveillance specimen holders, control rod GTs, and holddown springs. These failures were frequently repeated in plants of the same basic design because degradation is often slow to develop and cannot always be observed in time to implement modifications on newer plants. As technology advanced in mechanical and materials disciplines and these advances were reflected in modifications and new designs, failure of these components was virtually eliminated.

Multiple reactor internal bolt failures were discovered during the 1980s during inspections at B&W plants. These failures were in bolts made from Alloy A-286 (American Society for Testing and Materials (ASTM) SA453, Grade 660), that fastened the reactor vessel thermal shield to the lower grid assembly and the core barrel to the core support shield. Additional failures were discovered in bolts used to attach the surveillance specimen holder tube to the thermal shield.

In domestic plants, there have been no historical incidents that involved degradation of the bolts that attach the baffle plates to the former plates in Westinghouse or B&W plants, or the few CE plants that use bolts. There were recorded incidents of aging degradation at foreign plants built by Siemens and Kraftwerke Union from 1986 to 1987 [Ref. 9]. The affected plants are Biblis A and B, Goesgen, Neckarwestheim, and Unterweser. The aging degradation was due to SCC, caused by lockwelding of the Alloy X-750 bolts. The affected fasteners were replaced and

mechanically locked in place. No further incidents were reported. Recent inspections at Framatome plants [Ref. 10] and one Belgium plant also identified cracking of a small percentage of Type 316 stainless steel baffle/former bolts. These were noted in plants operating for 59,000 hours to 118,000 hours.

Framatome, a former Westinghouse licensee, employs a core baffle design that is similar to the Westinghouse design. There are some differences in plant operation between the Framatome plants and the Westinghouse domestic plants. Plants that were inspected that have cooling holes and standard upflow in the baffle/barrel region have no reported incidents of cracked baffle/former bolts.

NRC Information Notice 98-11 [Ref. 57] describes the baffle-former bolt indications observed in Europe and the actions taken by the WOG to assess the impact of cracking on domestic Westinghouse plants.

Possible causes of baffle/former bolt cracking are irradiation-assisted SCC (IASCC), irradiation embrittlement, stress relaxation, and fatigue, or some combination of these. If a large number of baffle/former bolts fail, potential consequences include:

- Fuel degradation due to flow leakage through the gaps between adjacent baffle plates (i.e., baffle jetting)
- Increased core bypass flow associated with an increase in baffle gap flow leakage
- Potential increase in failure of the remaining baffle/former bolts since the loads on these bolts will increase
- Baffle plates impacting against adjacent fuel assemblies in a LOCA event, potentially leading to fuel grid deformation, which could affect the coolability of the reactor core

Specific inspections of baffle/former bolts at several domestic WOG plants has indicated a small degree of degradation (<1.2%). Several of these bolts were removed for subsequent hot cell testing. In addition, a PWR Materials Reliability Project has been implemented by the industry, with a specific Issue Technical Group (ITG) to address reactor vessel internals issues. The ITG and the WOG have implemented a series of tasks including the hot cell testing and characterization of the irradiated bolts removed from the WOG plants.

As new information becomes available from the MRP and WOG tasks, it will be factored into plant specific license renewal applications. This report provides a bounding set of aging mechanisms and effects and the on-going programs are not expected to identify any new issues.

2.6.3 Incore Instrumentation Tubes

There are basically two methods used by the three NSSS vendors to guide thermocouple and flux detector instrumentation into the core. In most Westinghouse plants, the incore flux

detectors are directed through the reactor vessel bottom head via thimble tubes or guideways, and core exit thermocouples are brought in through the reactor vessel top head. In the San Onofre 1 and Yankee Rowe designs, all incore instrumentation is brought in through the top head. In Seabrook, Surry 1 and 2, and H. B. Robinson, thermocouples are combined with flux detectors for a complete bottom entry instrument assembly. For the BMI design, the thimble tubes are retractable, and insertion/retraction of these tubes is directed by long-radius guides below the bottom head and by internals guides between the bottom head and fuel assemblies.

There is significant variation among plants as to thimble tube diameters (outer and inner), thimble tube-to-guide path clearance, length of thimble tube run and run radii, number of bends, coolant velocity in the tube-guide clearance, and the length of thimble tube exposed to coolant flow. WOG plants using combined thermocouples and flux detectors also use an Alloy 600 pressure thimble.

B&W plants use a BMI flux thimble approach that is similar to the Westinghouse concept. There is also one CE plant, Maine Yankee, that uses BMI. The remaining CE plants use a top-mounted design.

In the bottom-mounted flux thimble guide design, historical issues have been of four types: (1) obstruction of flux detector pathways, (2) flow-induced vibration and wear of thimble tubes, (3) flow-induced vibration fatigue damage to thimble tube guideways, and (4) damage to incore instrumentation (ICI) flange seating surfaces at refueling [Ref. 11]. The first item, pathway obstruction, is a random phenomenon and can often be mitigated by appropriate cleaning procedures at refueling. Vibration and wear of thimble tubes were observed and measured primarily at Westinghouse plants using eddy-current techniques (ECTs).

High-cycle fatigue damage to thimble tube guides and nozzles occurred at Oconee 1. Incore instrument flange damage occurred at Calvert Cliffs due primarily to difficulties in removing and replacing gaskets at refueling. The thimble tube degradation issue, particularly with the bottom-mounted variety, occurred mostly in the late 1980s. Currently the issue is reduced to a long-time wear/replacement event, recurring about every 12 refueling cycles. Westinghouse conducted tests that indicated that significantly reduced thimble wear is obtained by using stiffer thimble tubes and smaller thimble tube-guide clearances. Repositioning is used to further extend tube life. The NRC issued Bulletin 88-09, "Thimble Tube Thinning in Westinghouse Reactors," to alert utilities to the issue [Ref. 12].

2.6.4 Welds

Welds are used in reactor internals systems to provide the advantages of a continuous metal joint. They are used to provide structural integrity and sealing, and they act as fastener locking devices. With a few exceptions, welds did not pose significant problems in PWRs and when failure occurred, it was usually because of the degradation of a component or components to which the weld was affixed. From a historical review of issues that were associated with weld failures [Ref. 11], the largest number of weld failures was associated with thermal shield

degradation, and all were attributed to either the high-cycle fatigue caused by flow-induced vibration or to fatigue in general.

2.6.5 Holddown Springs/Compensating Rings

CE and Westinghouse employ large ring springs, which provide a clamped-end condition at the top of the internals under the reactor head.

During a plant shutdown at Palisades in October 1973, a visual inspection of the reactor internals revealed worn areas in the reactor vessel flange and head caused by the internals [Ref. 11]. In addition, wear was noted on the mating internals, alignment keys and slots, reactor vessel snubbers, and outlet nozzle faces.

The wear was caused by rigid body motion of the internals permitted by a combination of time-dependent reduction of spring force and mechanical tolerances. Worn surfaces were repaired and the new design using Belleville spring assemblies increased the holddown capacity and solved the problem.

In November 1974, Calvert Cliffs discovered a permanent deformation in the holddown ring during low-power physics testing [Ref. 11]. A shim was added prior to replacing the reactor head to increase the holddown force. Subsequently, a new, higher-capacity holddown ring was installed.

In both of these cases, detection occurred early enough to prevent development of a safety issue. In the case of Palisades, larger than normal excore detector readings suggested possibly excessive core/internals vibration. Subsequent visual inspection after removing the head revealed many wear locations. This combination of excore monitoring and ISI was sufficient to limit this to an economic issue.

2.6.6 Surveillance Specimens and Guides

Some of the early model plants experienced damage to the surveillance specimen assemblies and their support tubes or guides. In most cases the cause was identified as flow-induced vibration. The surveillance specimens and their holders are located in the reactor vessel downcomer region. In the B&W designs, they are supported by the thermal shield and core barrel. A few of the early Westinghouse plants are also supported by those components, whereas in later Westinghouse plants, the surveillance specimen guides are generally supported from the thermal shield or neutron pads. In CE plants, the surveillance specimen guides are supported from the reactor vessel wall.

A review was conducted of degradation events associated with surveillance specimen tube holders [Ref. 11]. The Westinghouse surveillance guide degradation events were induced first by a thermal shield displacement and the subsequent degradation that resulted.

2.6.7 Guide Tubes

2.6.7.1 Guide Tube Assembly

Wear on the GT surfaces that align and support the RCCAs occurred throughout the industry. The rate of wear is dependent on the reactor model and type of RCCA usage. As in any mechanical system with moving parts, there will be some wear. Westinghouse made recommendations to plant operators that minimize the rate of wear and extend the life of the components.

The GT assembly is easily replaceable. As described in Subsection 2.3.2.4, the GT fasteners are accessible from the top of the upper internals assembly and the unit, with the aid of tooling, is withdrawn through the top. A new GT is inserted using the procedure in reverse.

If the utility desires, inspections of the GTs can be accomplished as part of an ISI during a normal refueling. In this manner eventual replacement can be scheduled with the most accommodating scheduled outage to minimize any additional downtime.

2.6.7.2 Guide Tube Support Pins

Support pins are located at the bottom of the GTs and engage the UCP, providing the GT with lateral support in Westinghouse plants. The pins at most plants are Alloy X-750. Some of these pins, in both domestic and foreign plants, have experienced SCC [Refs. 11, 13, 14, 15, and 16]. Two plants have support pins made of 316 CW stainless steel.

The support pin degradation issue has been addressed on a plant-specific basis either by complete support pin replacement or by performing inspections that demonstrate that support pin degradation did not take place. Replacement support pin designs also employed Alloy X-750 material with heat treatments (Rev. A and Rev. B), which is substantially less susceptible to SCC in the PWR environment. To date, all domestic plants use the updated pin material designs except for Surry 2, a partial replacement at Kewaunee and Point Beach 2, and three plants (Ginna, Surry 1, and Cook 2) that have a different replacement support pin design. As a result, these three plants are excluded, relative to GT support pins, from this report and require plant-specific actions. For all other domestic WOG plants, cracking of these pins will not lead to a loss of intended function since:

- The support pin flange will be maintained within the guide tube bottom flange
- A portion of the pin will always extend into the core plate
- Engagement and alignment will be maintained within the relatively small clearance

Evaluations were subsequently performed by the WOG to investigate indications of degradation that were found on four foreign plants and one domestic plant that has Rev. A pin material. Currently, support pins at a number of WOG plants are being replaced. As noted above, pin degradation does not lead to a loss of intended function. Generally, pin replacement is considered to be a sound maintenance practice to preclude degradation when industry experience indicates that such degradation has been observed.

2.6.8 Control Rod

A significant wear history was developed on the RCC rods beginning in 1983 at the Point Beach 2 plant after 13 years of operation. One rod had a 2-inch crack near the tip and fretting wear on several rods to a maximum of 64 percent. Refer to IE Information Notice No. 87-19, "Perforation and Cracking of Rod Cluster Control Assemblies" [Ref. 17] for additional information.

Inspections that have since taken place, both domestic and foreign, on two-, three-, and four-loop plants including fuel lattices of 14x14, 15x15, 16x16, and 17x17, have yielded various degrees of wear and in some cases breaching of the cladding.

The wear, primarily fretting, between the rods and guide tube "cards" is caused by a control rod fully withdrawn and parked for a long period and subjected to flow-induced vibration. The rod cracking is caused by IASCC and a combination of stresses due to swelling of the absorber material, mechanical impact, and fatigue.

The RCCAs in the 14x14 and 15x15 plants inspected ran from 9 to 16 cycles. Each cycle represents 1 to 1 1/2 years. These plants have wear depths ranging from 35 to 100 percent. The RCCAs in the 17x17 and 17x17AS plants exhibited an accelerated wear history. These plants have wear depths ranging from 50 to 100 percent in two to five cycles. The RCCAs in the 17x17 XL plants exhibited maximum wear depths ranging from 29 to 100 percent in one to five cycles. There are no 16x16 domestic plants.

Actions taken to extend the life of the RCCA rods include (1) for wear reduction, vertical repositioning and chrome-plated replacement rods and (2) for crack inhibition, high-purity stainless steel and larger clearance between the cladding and absorber material. These actions were applied to several plants. Thirty-one plants have repositioned, and thirty-one are using chrome-plated rods. The inspection data have indicated a marked improvement in operational life.

From 1968 through 1983, there were eight instances of vanes separating from the RCCA spiders. Two additional events occurred since 1984. All occurrences were in either 14x14 or 15x15 plants, and all were simple separation at the vane-hub braze joint without any deformation or breaking of the vane tang. While no specific causes for separation were identified, it is suspected that in some cases vane separation was related to an interaction between the RCCA and adjacent parts either from direct impact, debris, or galling. Operation time to vane separation ranged from less than 1 year to 13 years. The fact that the frequency of vane separation is not increasing with time suggests that there is no degradation of the braze joint with length of service. To date, with the increasing number of RCCAs in service each year, the failure rate per 100 RCCAs in service is actually decreasing. Any proposed service-related degradation, such as corrosion or radiation damage, is expected to result in an increase in failures with time in a given plant or an increased number of failures in the total plant population. All previous vane separations were isolated events. That is, one vane separation has not affected other RCCAs in the core; only one vane at a time has become separated prior to detection; and no systematic design or manufacturing problem has been identified.

In some instances, separated vanes interfered with free RCCA travel. One RCCA stuck in the fully withdrawn position is considered in all applicable FSAR safety analyses. If an RCCA were to become jammed due to vane separation, there would likely be some degree of insertion. Therefore, the jammed RCCA is bounded by the safety analyses. The safety impact is further mitigated by the high probability of detecting a stuck RCCA during normal surveillance operations.

In May 1986, the weld size at the vane-to-spider hub was increased. All RCCAs manufactured after this date have this change.

2.6.9 Guide Tube Removable Inserts – Flexures

Some of the 14x14 and 15x15 operating plants experienced cracked or broken flexures that function to hold the removable insert in place. The flexures are manufactured from Alloy X-750 material. The failure cause was determined to be SCC.

2.6.10 Core Barrel

At two CE plants, flow-induced vibration of the thermal shields resulted in damage to the base metal and welds of the thermal shields support lugs attached to the core barrel [Ref. 11]. The thermal shields and support lugs were ultimately removed from these two plants to eliminate the problem. Damage to the core barrels was corrected by machining surface flaws and by drilling crack arrestors at the ends of the through-wall cracks present. Programs to evaluate the effects of these modifications on plant safety and performance were conducted, with favorable results. Monitoring, inspection, maintenance, and in some cases, modification programs were instituted at other CE plants that could be potentially affected to preclude the possibility of significant degradation. These programs were successful in preventing degradation of the type experienced. This damage was caused by high-cycle fatigue that, as expected, manifested itself early in plant operating life.

2.6.11 Core Barrel Flange Plugs

Access holes are provided in the core barrel flange for inspections and for handling the reactor vessel irradiation specimens. These holes are plugged during operation to prevent bypass flow. They are held in place with the upper internals assembly and the reactor vessel head. Incidents occurred during refueling due to non-design basis hydraulic transients that dislodged these plugs.

Although this is not a time-dependent degradation event, loose plugs caused significant economic penalties and are therefore noted here.

A replacement plug was developed for this application using self-locking fingers that prevent dislodging and thereby solve the problem.

2.7 AGING EFFECTS

Aging degradation refers to the time-dependent degradation of a material or component, which may result in a decrease in the ability of the material or component to perform its intended function. The mechanisms by which age-related degradation can occur may be driven by physical, mechanical, or chemical processes, i.e., by interaction of the material or component with its physical, mechanical, or chemical environment. The specific mechanisms selected for assessment are those that experience has shown to be significant or potentially significant to the performance of the reactor internals components. The aging effects that are being considered for the reactor internals components within the scope of this report are:

- Fatigue-related cracking and crack growth for fatigue-sensitive components
- Cracking and material degradation due to corrosion/SCC
- Cracking due to irradiation embrittlement/IASCC
- Reduction in fracture toughness leading to thermal-aging-related cracking of austenitic stainless steel castings
- Material wastage due to erosion and erosion/corrosion
- Material loss caused by wear of interfacing components leading to loss of function
- Reduction or loss of bolt preload due to creep or stress relaxation that leads to increased wear and fatigue usage

TABLE 2-1
SUMMARY OF REACTOR INTERNALS SUBCOMPONENTS SUPPORTING IDENTIFIED INTENDED FUNCTIONS

Part or Subcomponent	Intended Function (see Section 2.2)					
	1	2	3	4	5	6
Lower core plate and fuel alignment pins	Y	N	Y	Y	Y	N
Lower support forging or casting	Y	N	Y	Y	Y	N
Lower support columns	Y	N	N	Y	Y	N
Core barrel and core barrel flange	Y	N	Y	N	N	Y
Radial support keys and clevis inserts	Y	N	N	N	N	N
Baffle and former plates	Y	N	Y	N	N	Y
Core barrel outlet nozzle	N	N	Y	N	N	N
Secondary core support	Y	N	Y	Y	Y	N
Diffuser plate	N	N	Y	N	N	N
Upper support plate assembly	N	Y	N	N	N	N
Upper core plate and fuel alignment pin	Y	N	Y	N	N	N
Upper support column	N	Y	N	Y	N	N
Guide tube and flow downcomers	N	Y	N	N	N	N
Upper core plate alignment pin	N	Y	N	N	N	N
Holddown spring	N	N	N	N	N	N
Head and vessel alignment pins	N	Y	N	N	N	N
Control rod	N	N/A	N	N	N	N
Drive rod	N	N/A	N	N	N	N
Neutron panels/thermal shield	N	N	N	N	N	Y
Irradiation specimen guide	N	N	N	N	N	N
BMI columns and flux thimbles	N	N	N	Y	N	N
Head cooling spray nozzles	N	N	Y	N	N	N
Upper instrumentation column, conduit, and supports	N	N	N	Y	N	N
Mixing device	N	N	N	N	N	N
Bolts and locking mechanisms	Y	Y	Y	Y	Y	N
Specimen plugs	N	N	N	N	N	N

TABLE 2-2
SUMMARY OF REACTOR INTERNALS SUBCOMPONENTS REQUIRING AGING MANAGEMENT REVIEW

Part or Subcomponent	Aging Management Review Required?
Lower core plate and fuel alignment pins	YES
Lower support forging or casting	YES
Lower support columns	YES
Core barrel and core barrel flange	YES
Radial support keys and clevis inserts	YES
Baffle and former plates	YES
Core barrel outlet nozzle	YES
Secondary core support	YES
Diffuser plate	YES
Upper support plate assembly	YES
Upper core plate and fuel alignment pin	YES
Upper support column	YES
Guide tube and flow downcomers	YES
Upper core plate alignment pin	YES
Holddown spring	NO
Head and vessel alignment pins	YES
Control rod	NO
Drive rod	NO
Neutron panels/thermal shield	YES
Irradiation specimen guide	NO
BMI columns and flux thimbles	YES
Head cooling spray nozzles	YES
Upper instrumentation column, conduit, and supports	YES
Mixing device	NO
Bolts and locking mechanisms	YES
Specimen plugs	NO

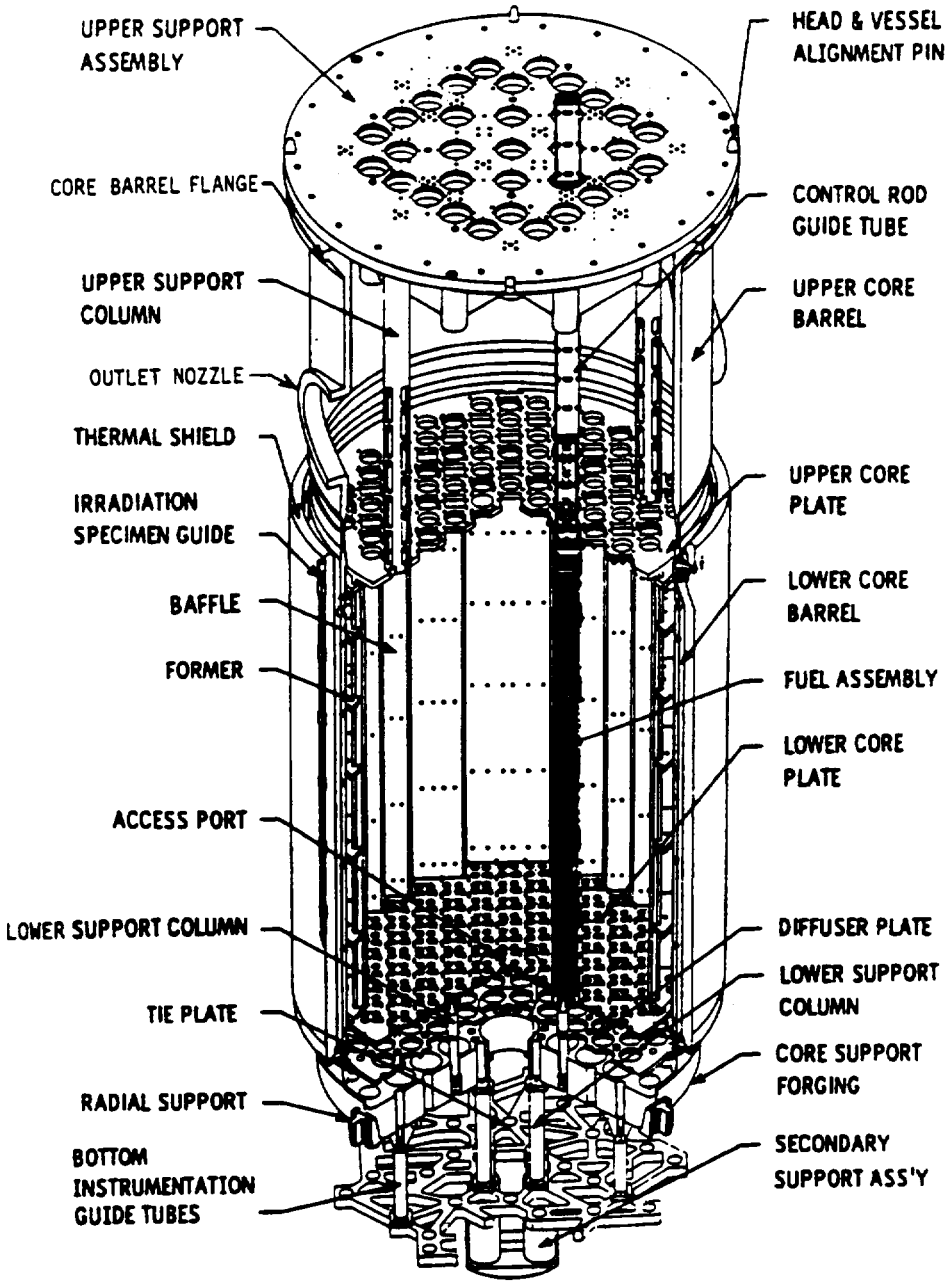

Figure 2-1 Westinghouse Reactor Internals with Forged Lower Support

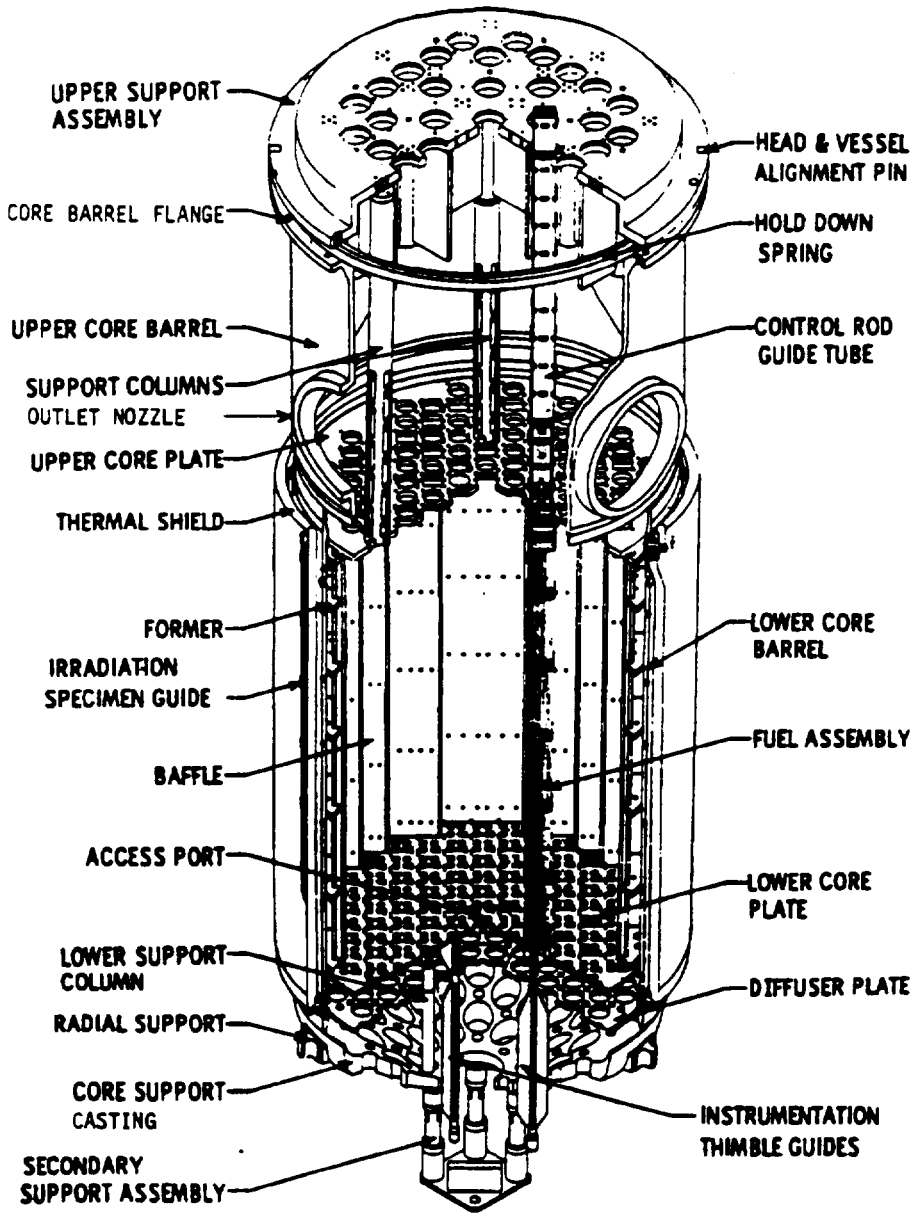

Figure 2-2 Westinghouse Reactor Internals with Cast Lower Support

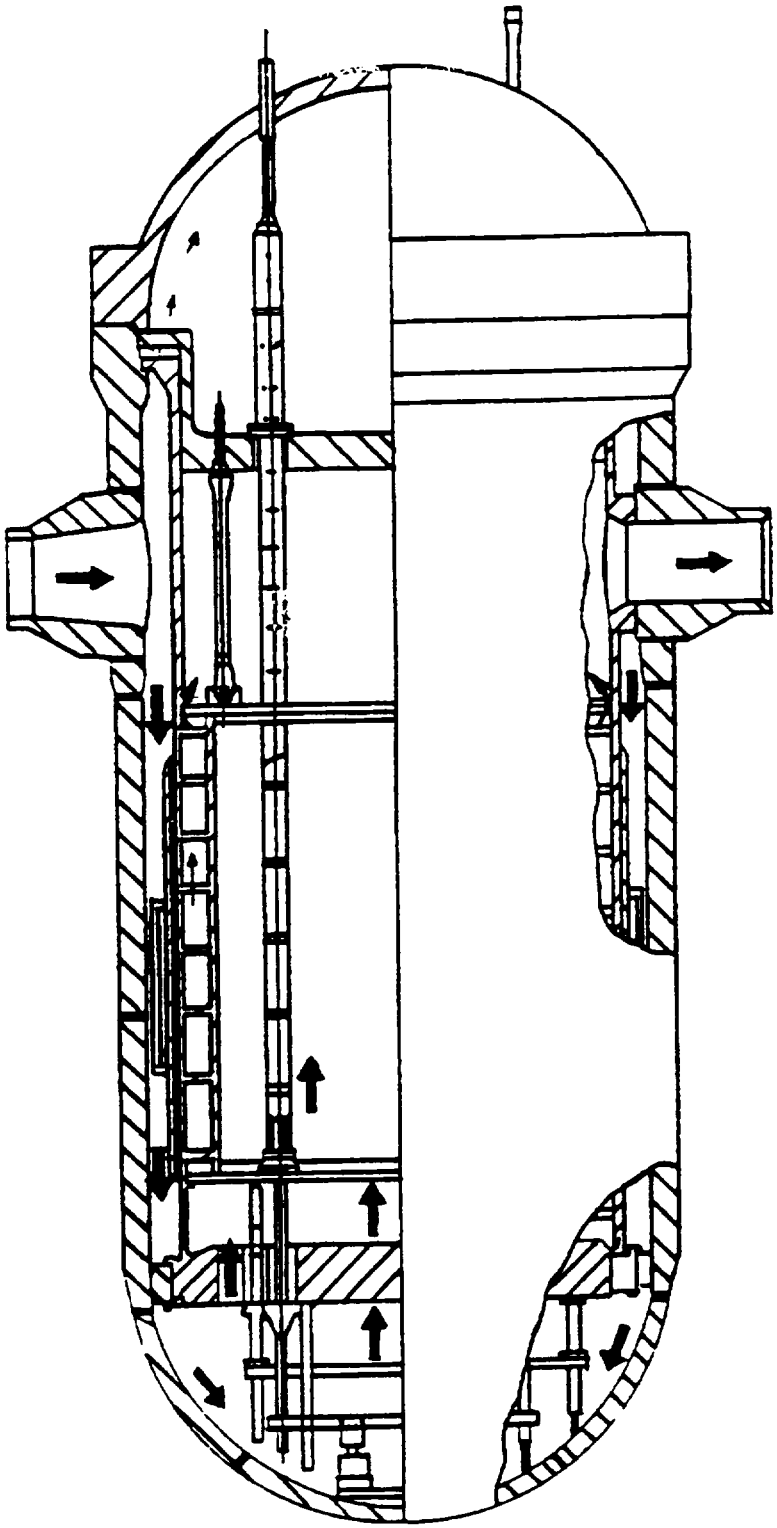

Figure 2-3 Reactor Coolant Flow Paths

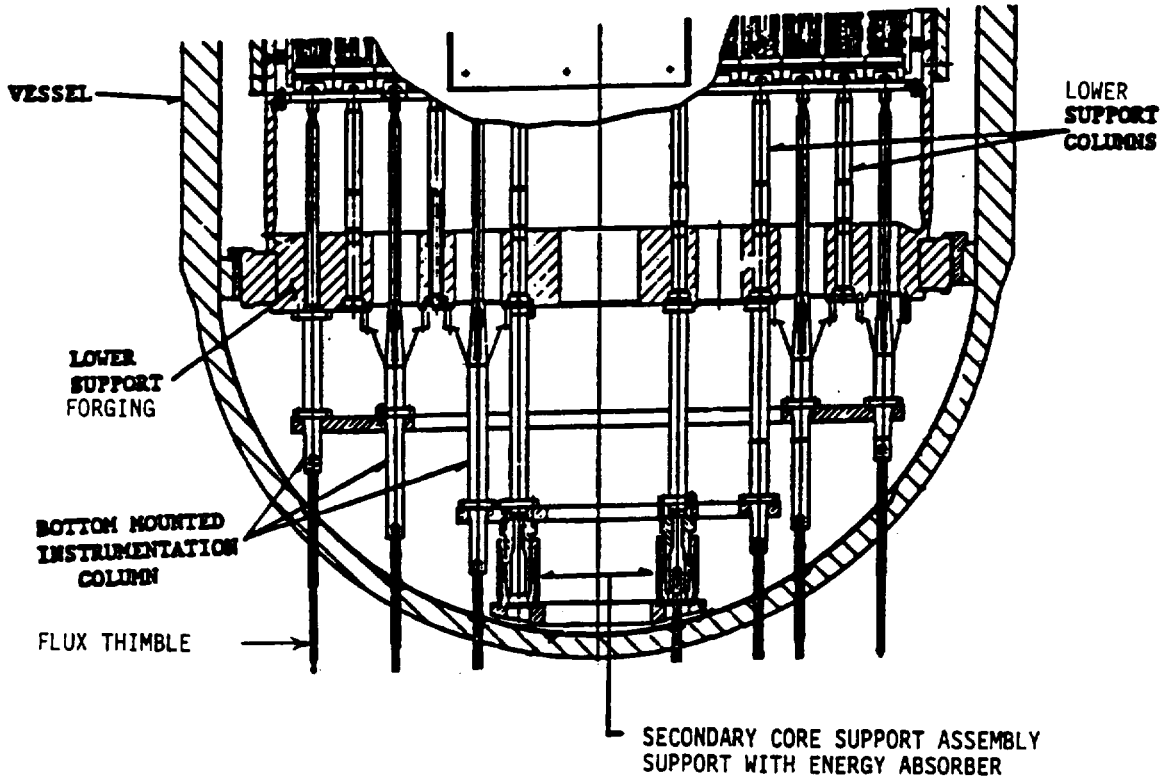

Figure 2-4 Reactor Internals Lower Section

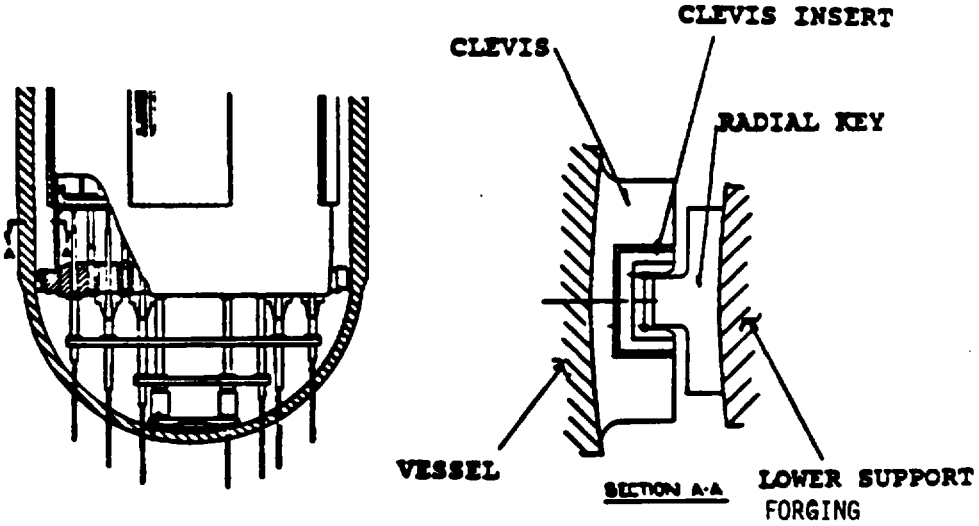

Figure 2-5 Radial Keys and Clevis Inserts

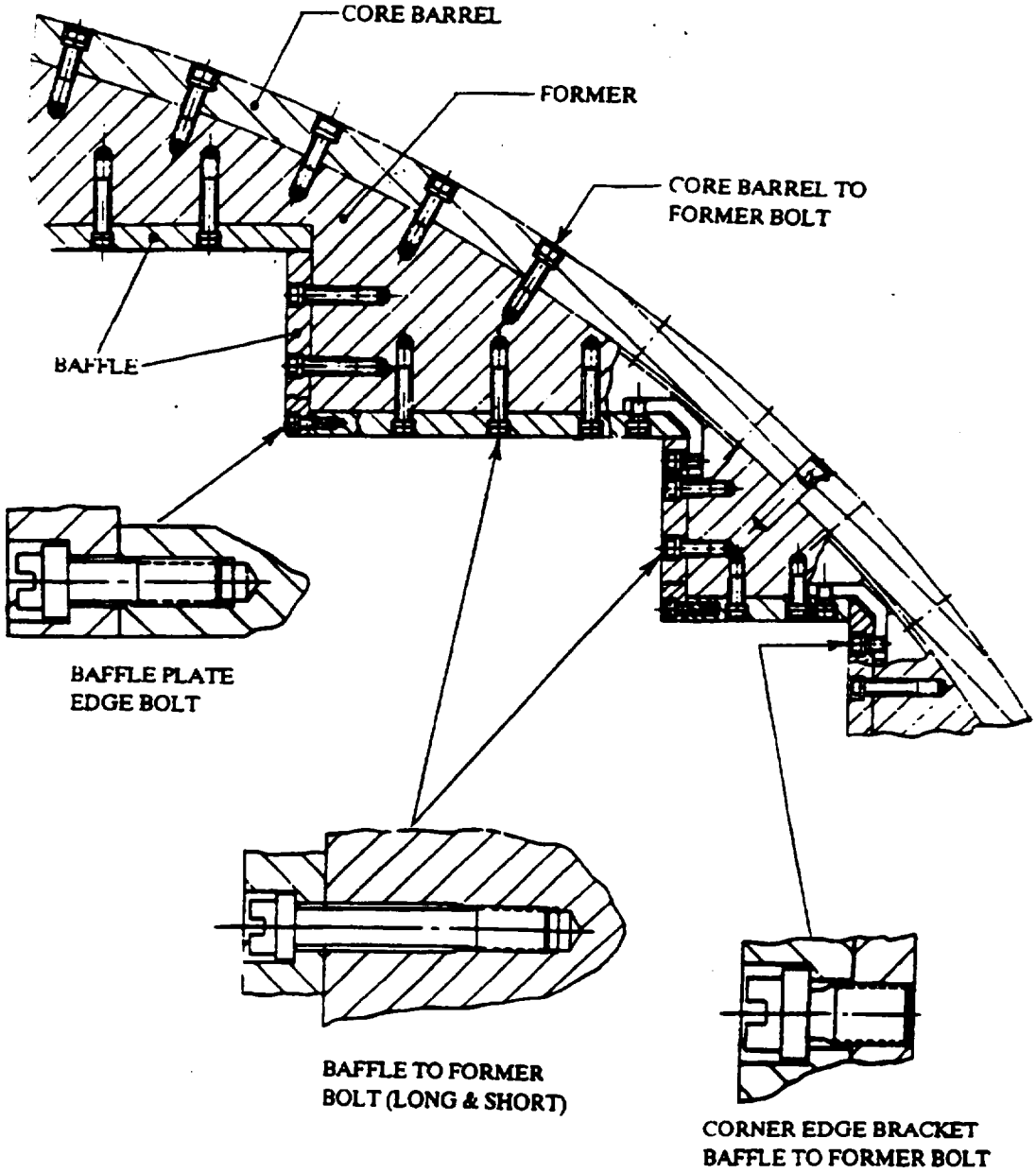

Figure 2-6 Representative Baffle/Former Assembly

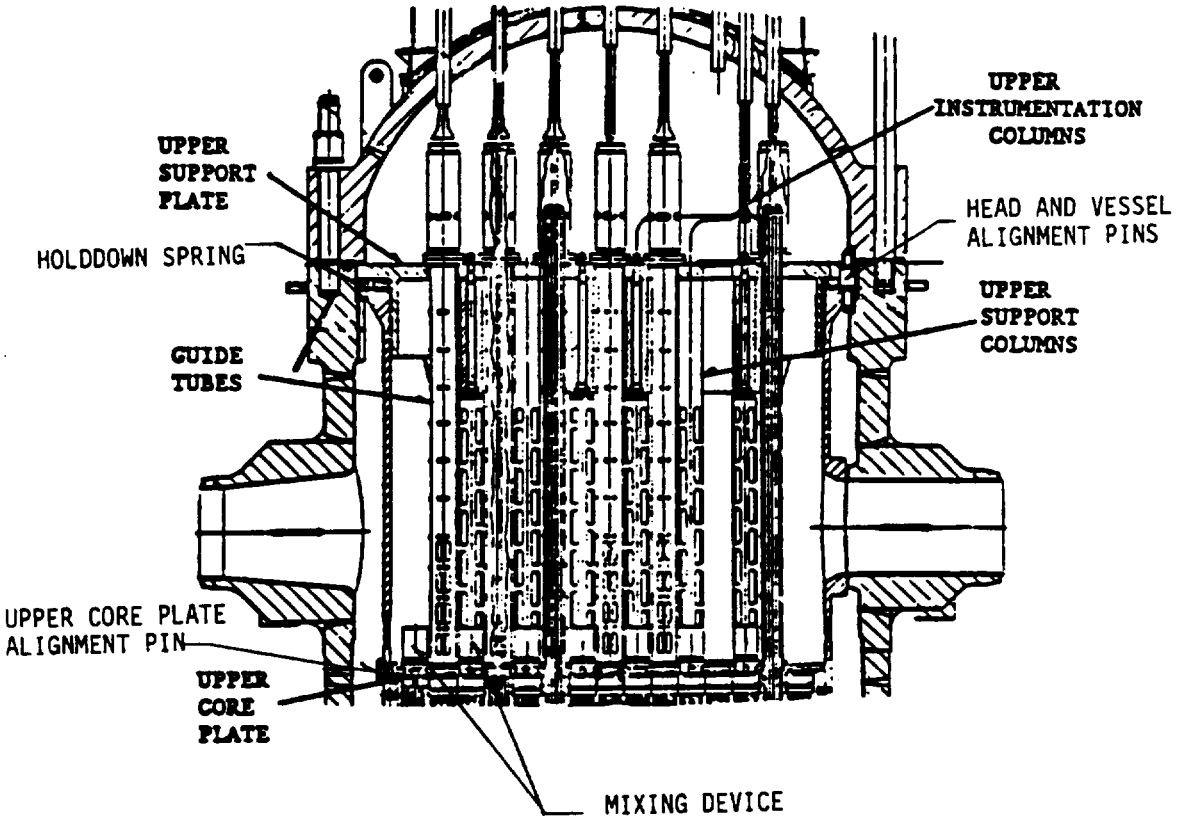

Figure 2-7 Reactor Internals Upper Section

3.0 TIME-LIMITED AGING ANALYSES AND AGING EFFECT EVALUATIONS

In this section, mechanisms are described to determine aging effects, and all identified effects are evaluated to identify potential degradation of reactor internals intended functions. This section also evaluates the time-limited aging analyses (TLAAs) (see Subsection 3.1.10). All effects and TLAAs that require management during an extended period of operation are identified.

3.1 AGING MANAGEMENT REVIEW

In this section, mechanisms are described to determine aging effects, and the effects are then evaluated to identify potential degradation of the reactor internals components intended functions. Subsection 3.1.10 evaluates the TLAAs. All effects and TLAAs that require management during the extended period of operation are identified.

An aging effect is defined to be significant for a component if, when allowed to continue without an effective program, the capability of the component to perform its intended function throughout the license renewal term would be compromised. The potential significance of an aging effect was determined by examining the component design features (Section 2.3), the component design bases (Section 2.4), its operation and maintenance histories and its susceptibility to the aging effect being considered. If it can be shown that the component is either not susceptible or is susceptible to such a small degree that the component's intended function is maintained throughout the license renewal term, then the component/aging effect combination is not significant.

Effects of potentially significant age-related degradation mechanisms are examined in terms of the capability of effective programs for maintenance, inservice inspection (ISI), surveillance, testing, and analytical assessment to manage the effects. Combinations of effects and components for which generic program elements effectively manage aging effects are provided in Section 4.0 of this report.

License renewal applicants intending to reference these generic conclusions are responsible for a review of plant-specific features, including appropriate current licensing basis (CLB) documents and information to determine this report's limitations. This review should compare the design basis for particular components with the representative design bases given in this report. Finally, specific assumptions and criteria used in this section should be examined to ensure that they, or justified equivalents, apply to the component under consideration.

3.1.1 Irradiation Embrittlement

3.1.1.1 Mechanism Description

Exposure to high-energy neutrons (neutron energies greater than 0.1 MeV) can cause changes in the properties of stainless steel and nickel-based alloys used in reactor internals. The extent of irradiation embrittlement is a function of both the irradiation temperature and the neutron fluence. The nominal irradiation temperature for reactor internals is determined by the primary

coolant temperature (550°F to 650°F) and local gamma heating rates. Data from power reactor irradiation of Type 304 and Type 316 stainless steel are available from several studies [Refs. 20, 21, and 22]. Embrittlement, as evidenced by increases in yield strength and decreases in uniform and total elongation, is common in these materials after irradiation. Studies [Refs. 20 and 21] showed that embrittlement of stainless steel can occur at fluences as low as 1×10^{21} n/cm^2 (E > 0.1 MeV) in the more susceptible stainless steel materials such as 304SS. These same studies showed that the rate of change in mechanical properties is reduced at fluences above 2×10^{22} n/cm^2 (E > 0.1 MeV).

3.1.1.2 Aging Effect Evaluation

Neutron irradiation can produce changes in mechanical properties by increasing yield and ultimate strength and correspondingly decreasing ductility and fracture toughness of internals component materials. These changes influence the structural response of the reactor internals components, which could lead to concerns of providing adequate core support and reactor coolant flow through the core. This is an issue for the reactor internals intended functions of shutting down the reactor, maintaining it in a safe shutdown condition, and preventing or mitigating accident consequences.

Programs were established to determine the properties of materials exposed to irradiation in operating PWRs. Table 3-2 presents experimental material property data for Type 316 cold-worked (CW) stainless steel [Ref. 20] that was exposed to neutrons in operating PWRs. The toughness, J_{Ic}, is the value for the onset of ductile crack extension and the tearing modulus, T, characterizes the resistance to ductile, stable crack extension under monotonic loading.

The data, as compared to the unirradiated material properties, indicate an increase in yield stress and ultimate tensile stress and a drop in uniform and total elongation. The fracture toughness and tearing modulus decreased with increasing fluence, but the toughness remains significantly higher than that of ferritic steels as used in pressure vessel construction.

No instance of internals degradation has been recorded that can be directly attributed to irradiation embrittlement. However, the end-of-life fluence level for some internals components is approximately 1×10^{23} n/cm^2 to 1.6×10^{23} n/cm^2 (E > 0.1 MeV), and data are not available for a fluence greater than 7.5×10^{22} n/cm^2 (E > 0.1 MeV). The internals components most susceptible to irradiation embrittlement are those that are nearest to the reactor core. These components experience significant neutron irradiation exposure, while remotely located components receive significantly less neutron exposure. Embrittlement is evidenced by increases in yield strength and tensile strength, and a decrease in ductility and fracture toughness. Irradiation embrittlement, by itself, does not result in the initiation of cracks in reactor internals components. Rather, irradiation embrittlement decreases the resistance to crack propagation. Therefore, a crack produced by some other initiation and subcritical growth mechanism would need to be present before irradiation embrittlement became potentially significant. Any pre-existing flaws or defects of significant size would have been prevented by quality assurance (QA) procedures during plant construction.

Irradiation embrittlement is possible in reactor internals components fabricated from austenitic stainless steel and nickel-based alloys with expected neutron fluences in excess of 1×10^{21} n/cm^2 (E > 0.1 MeV). If the expected neutron fluence is less than approximately 1×10^{21} n/cm^2 (E > 0.1 MeV), then the changes in mechanical properties due to neutron exposure are insignificant. The reactor internals components with fluences greater than 1×10^{21} n/cm^2 (E > 0.1 MeV) (e.g., lower core barrel, baffle/former assembly, baffle/former bolts, lower core plate and fuel pins, lower support forging, clevis bolts) are potentially susceptible to irradiation embrittlement. Of the parts and subcomponents that are listed in Section 2.2 that are subject to an aging management review and perform intended functions, the following will not exceed 1×10^{21} n/cm^2 (E>0.1 MeV) fluence level:

- Radial keys
- Clevis inserts
- Core barrel outlet nozzle
- Secondary core support
- Diffuser plate
- Upper support plate assembly
- Upper core plate
- Upper support columns
- Upper core plate alignment pins
- Internals holddown spring
- Head/vessel alignment pins
- Guide tubes
- Head cooling spray nozzles
- Upper instrumentation column
- Mixing device

Thus, for the above components, the effects of irradiation embrittlement are not significant. For the remaining components, further aging management options are provided in Section 4.0.

3.1.2 Stress Corrosion Cracking

3.1.2.1 Mechanism Description

Stress corrosion cracking (SCC) is a localized nonductile failure caused by a combination of stress, susceptible material, and an aggressive environment. The SCC failure mode can be either intergranular (IG) or transgranular (TG). IGSCC is frequently associated with a sensitized material. Sensitization of unstabilized austenitic stainless steel is characterized by a precipitation of a network of chromium carbides with an accompanying depletion of chromium at the grain boundaries. Since the depletion of chromium at or near grain boundaries is caused by the formation of carbides, the carbon content of austenitic stainless steel is critical to the susceptibility of the material to sensitization. If, because of carbon content, a given grade of austenitic stainless steel is considered susceptible to sensitization, it will not become sensitized unless cooled relatively slowly through the sensitization temperature range (900°F to 1700°F) during heat treatment. Stickler and Vinckier [Ref. 23] explain this phenomenon in work done on Type 304 stainless steel by proposing that the different forms that carbide precipitates take at

various temperatures determines the intergranular corrosion characteristics of the stainless steel. They proposed that at lower temperatures, i.e., 900°F to 1200°F, thin and extremely small geometric or dendritic flakes form and, over time, build a continuous network or "sheet" in the grain boundaries, making the grain boundaries vulnerable to corrosive attack around the grain. At temperatures of 1200°F to 1500°F, leaf-like dendrites are formed and grow into thicker dendrites. These do not form a continuous network around the grain boundary (as the "sheets" do) and are not as detrimental from a corrosion standpoint. At higher temperatures, i.e., above 1500°F, the precipitates come out as small geometrical particles and are not harmful from a corrosion standpoint.

The relevancy of the sensitization temperature and time at temperature cannot be overemphasized. With a sensitized austenitic stainless steel, the material is susceptible to IGSCC in an oxidizing environment.

Primary water SCC (PWSCC) is a form of IGSCC that has been observed in Alloy 600 and Alloy X-750 in PWR applications. PWSCC is defined as intergranular cracking in normal PWR primary coolant without the need for additional aggressive species. PWSCC has been observed in the two high-nickel alloys when they are subjected to a combination of high stress and an undesirable microstructure. The occurrence of PWSCC is sensitive to increasing temperature in the range of interest.

Transgranular SCC (TGSCC) is caused by more aggressive chemical species (e.g., caustics or chlorides), especially if coupled with oxygen and combined with stresses approaching the yield strength or greater.

3.1.2.2 Aging Effect Evaluation

For IGSCC to occur in austenitic stainless steel, three things must be present: a susceptible material, stress approaching or exceeding the yield strength of the material, and an aggressive environment such as an oxidizing environment. In the absence of one of these three conditions, IGSCC will not occur.

The principal method of preventing IGSCC and TGSCC is by water chemistry control. Westinghouse specifies that the reactor coolant chemistry be rigorously controlled, particularly with regard to oxygen, chlorides, and other halogens. Ingress from other species, such as demineralizer resins, is carefully monitored, and corrective actions are taken to preclude exposure. In addition, startup transient oxygen levels are minimized as Westinghouse follows the recommendations of United States Nuclear Regulatory Commission (U.S. NRC) Regulatory Guide 1.44 in that oxygen control is established prior to elevated temperature operation.

To avoid the condition of a susceptible material, Westinghouse now prevents the use of sensitized austenitic stainless steel for the construction of reactor internals components by specifying that all austenitic stainless steels be procured in the solution-annealed and quenched condition. Sensitization can be prevented by reducing the exposure of susceptible materials to the sensitization temperature range (900°F to 1700°F) to short times by quenching the material after solution-annealing above the sensitization temperature range. Westinghouse recognizes

that welding is necessary in construction of the reactor internals subcomponents. To prevent sensitization, Westinghouse developed procedures that ensure that the reactor internals are not heated into the sensitization temperature range (900°F to 1700°F) for significant periods of time, by controlling the heat input during welding. The maximum interpass temperature is limited to 350°F to avoid sensitization of the reactor internals materials. Further, the temperature of post-weld heat treatment is limited to a maximum 900°F. Westinghouse demonstrated that the welding procedures employed result in structures that are free from sensitization as revealed by testing per American Society for Testing and Materials (ASTM) ASTM A262.

There are a limited number of Westinghouse Owners Group (WOG) plants that were manufactured prior to post-weld temperature limits imposed by the current materials and welding specifications. These plants were given a post-weld stress relief heat treatment at temperatures greater than 900°F and thus may have sensitized austenitic stainless steel components. However, as previously mentioned, Westinghouse specifies that the reactor coolant chemistry be rigorously controlled, particularly with regard to oxygen, chlorides, and other halogens.

The effectiveness of the above practice in the prevention of IGSCC and TGSCC in austenitic stainless steel was demonstrated by years of operating experience without this form of cracking in reactor internals. In laboratory experiments, even in cases where severely sensitized austenitic stainless steel was deliberately exposed to PWR coolant, no intergranular attack was observed. Therefore, for the WOG plants, the effects of sensitization of the reactor internals components manufactured from austenitic stainless steel are not significant.

A number of WOG plants exhibited PWSCC of guide tube support pins manufactured from Alloy X-750. The cracking of the Alloy X-750 material was attributed to the combination of high stress and an undesirable microstructure. Cracking in some of these pins occurred as early as 20,000 hours of service. New heat treatment specifications were identified for Alloy X-750 that resulted in the material becoming more resistant to PWSCC. Most WOG plants have rod cluster control assembly (RCCA) guide tube support pins fabricated from Alloy X-750 with the updated pin designs. However, cracking of the support pins will not result in a significant misalignment and the intended function will be maintained (see Subsection 2.6.7.2). Therefore, with the exception of those plants listed in Subsection 2.6.7.2, the effects of SCC of reactor internals guide tube support pins fabricated from Alloy X-750 with the updated pin designs are not significant.

In addition to RCCA guide tube support pins, the clevis insert bolts are also fabricated from Alloy X-750 material. The heat treatment employed could result in a material susceptible to PWSCC; however, there was no clevis bolt degradation or cracking reported in any Westinghouse plants. Some of these plants have exceeded 175,000 hours of service. The fluence, temperature, and stresses are lower for the clevis insert bolts in comparison to the support pin loadings. Alloy X-750 bolts used in an old plant designed to maintain different cylindrical sections of the core barrel did experience failure after approximately 13 years of operation. However, degradation of the clevis insert bolts would not result in a loss of intended function due to the nature of the design. A significant change in this support would be

recognized by comparing changes from baseline neutron noise data from the excore detectors, thus providing a means for observing core barrel motion and the frequencies and mode shapes governing such motion. Moreover, to reach this stage, two additional components would have to fail. Therefore, the effects of PWSCC of the clevis insert bolts are not significant.

The clevis inserts are manufactured from nickel-based Alloy 600, and four WOG plants use bottom-mounted instrumentation (BMI) thimble tubing manufactured from Alloy 600. Alloy 600 in the mill-annealed condition is susceptible to PWSCC. However, PWSCC of Alloy 600 occurs only in regions or components of high stress. The clevis inserts experience low and essentially compressive stress, and no failures have been reported. Like the clevis insert bolts, a failure of the clevis inserts would not result in a loss of intended function due to the nature of the design, and a significant change would be recognized by neutron noise monitoring. Therefore, the effects of PWSCC on the clevis insert are not significant.

Four plants that incorporate BMI thimble tubing of Alloy 600 have not experienced operational failures, nor would a failure result in a loss of intended function. A failed thimble can be capped. These thimbles are designed as replaceable components. Therefore, the effects of SCC of the BMI thimble tubing are not significant.

In summary, the effects of all forms of SCC are not significant for any reactor internal component covered in this report.

3.1.3 Irradiation-Assisted Stress Corrosion Cracking

3.1.3.1 Mechanism Description

Premature failure by intergranular environmental cracking of materials exposed to ionizing radiation has been termed irradiation-assisted SCC (IASCC). Experience in PWRs in the United States (control rod cladding) and in France and Belgium (baffle/former bolts) indicates that IASCC is a plausible aging mechanism for these PWR internals components. As with SCC, IASCC requires stress, environment, and a susceptible material. However, in the case of IASCC, a normally nonsusceptible material is rendered susceptible by exposure to neutron irradiation. Susceptibility has been observed at fluences as low as 1×10^{21} n/cm^2 (E > 0.1 MeV) in laboratory studies on 304 stainless steel in PWR environments. Type 316 stainless steel is less susceptible and field information suggests that greater exposures are required for the development of susceptibility.

There are several mechanisms that are considered as contributors to IASCC. These mechanisms include radiation-induced segregation (RIS); radiation hardening (also can be considered as embrittlement); embrittlement due to transmutation of species in the metal (e.g., forming He, H); stress changes due to relaxation, creep, and swelling; modification of localized electrochemistry; formation of aggressive ionic species by irradiation; and gamma heating effects. It is probable that many of these mechanisms contribute simultaneously to the phenomenon.

Some of these items affect the metal so that it becomes susceptible to IASCC even when tested out of a radiation field. One such mechanism is RIS, which has been extensively studied. The major effect observed is a narrow region of chromium depletion adjacent to the grain boundary, which is considered a significant factor in intergranular attack. This segregation is unlike classical sensitization in that no carbides are formed in the boundary. Segregation of other species to the boundary, such as silicon, has been suggested as a contributing factor to the intergranular cracking mechanism.

Radiation hardening of a metal matrix due to radiation-induced defects also increases the yield strength of the material. These changes in the matrix concentrate strain at the grain boundaries, resulting in a greater tendency to crack at this location. In addition, the increased yield strength increases the strain rate at a crack tip and as a result can increase the crack growth rate. A reduced ductility accompanies the hardening, and the overall embrittlement effect results in a material that is less able to resist the effects of a crack. Further embrittlement can occur by the diffusion of species to the grain boundaries, as described above, and by the transmutation of elements in the grain boundaries (e.g., B to He). The latter reaction results in weakened boundaries. The material effects have been observed to have an effect on performance at a neutron fluence as low as 1×10^{21} n/cm^2 ($E > 0.1$ MeV) and saturate at approximately 10^{22} n/cm^2 for the more susceptible materials.

The stress-strain parameters can be modified by irradiation-induced creep, swelling, and the resulting stress relaxation. These factors can result in higher stresses or can induce dynamic strain effects, which are known to accelerate environmental effects as demonstrated by the slow strain rate test.

The effects of radiation on the chemical and electrochemical factors contributing to IASCC have not been extensively studied and are not well defined. Changes in the species present due to radiation have been suggested but are considered to have a limited effect due to the dependence of electrochemical factors on the logarithm of species concentration. Thus, even with large changes in concentration within the crevice formed by a crack, the effects will be limited. In a PWR, the presence of excess hydrogen limits the presence of oxidizing species formed by radiation. Gamma heating effects from temperature elevation and species concentration in occluded regions have also been suggested as contributors to IASCC. A review of this subject is presented in Reference 24.

3.1.3.2 Aging Effect Evaluation

As discussed in Subsection 3.2.2.2, the effect of the SCC is not a significant age-related degradation mechanism for the reactor internals materials of construction. For IASCC to occur, susceptibility must be modified by the presence or action of radiation. As discussed previously, the environmental chemistry and stresses can be modified by the action of radiation, but these will not have a significant effect unless a susceptible material is present. The susceptible material is produced by the action of the neutron fluence on the structure of the material. Laboratory data indicate that for this to occur, the neutron fluence must exceed approximately 1×10^{21} n/cm^2 for the more susceptible materials. Therefore, those components that receive in excess of this neutron fluence are potentially susceptible to IASCC. Those components that do

not experience neutron fluences that exceed the apparent threshold level are listed in Subsection 3.2.1.2. The components that are potentially susceptible to IASCC earliest in the life of a PWR are those that are fabricated from the most susceptible materials and have a combination of high neutron fluence and relatively high stress. Although the baffle/former bolts are fabricated from a more resistant CW316SS, the high neutron fluence and high stress probably result in earlier indications in PWRs. This is supported by observations from foreign reactors.

Cracking has been observed in the baffle/former bolts of some French PWRs. This cracking is intergranular and has been attributed to IASCC. The fluence on the bolts that have cracked is approximately 4×10^{21} n/cm^2, which is somewhat higher than the level indicated as a threshold in laboratory tests, but other factors, such as stress relaxation, would modify the field behavior. No indication of susceptibility to this mechanism of attack has been observed in U.S. PWRs with fluences at higher levels than that reported for the cracking of the French baffle/former bolts. However, the available laboratory data and the European experience indicate that the effects of IASCC are a significant age-related degradation mechanism. Further aging management for the baffle/former and core barrel/former bolts are provided in Section 4.0.

3.1.4 Erosion and Erosion/Corrosion

3.1.4.1 Mechanism Description

Erosion is attributed to the continuous removal of protective surface films on a metal by mechanical action of a fluid or particulate matter. Erosion/corrosion occurs when the fluid or particulate matter is also corrosive to the metal. General erosion occurs under high-velocity conditions, turbulence, and impingement. Geometrical factors are extremely important.

3.1.4.2 Aging Effect Evaluation

All of the PWR reactor internals components considered in this evaluation are constructed of austenitic stainless steel or nickel-based alloys that are resistant to erosion and erosion/corrosion in a PWR environment. The relatively low fluid flow velocities in the reactor do not permit erosion to become a significant age-related degradation issue. The pH levels in the bulk coolant minimize corrosion and thus erosion/corrosion. The operating pressures of a PWR (approximately 2250 psia) preclude cavitation erosion, and the purity and particulate control of the reactor coolant eliminate particulate erosion as a significant concern [Ref. 25]. Therefore, the effects of erosion and erosion/corrosion are not significant for any of the PWR reactor internals components considered in this report.

3.1.5 Creep/Irradiation Creep

3.1.5.1 Mechanism Description

Creep is the plastic deformation that occurs over a period of time in a material subjected to a stress that is typically below the elastic limit. Creep occurs at elevated temperatures where

continuous deformation takes place under constant load. Steady-state creep is not a concern for stainless steel alloys below 1000°F and nickel-based alloys below 1400°F [Ref. 26].

A short-time transient creep occurs on initial loading of all components. This has not been observed to have any effect on the large components but contributes to stress relaxation in bolting (see Subsection 3.1.6.1).

Under irradiation, the defects introduced by neutron flux can result in creep similar to what would occur at a higher temperature in thermal creep. These effects have been observed in experiments in fast and thermal reactors [Ref. 27]. Stress and neutron fluence/flux are the important factors. In the range of interest, temperature is not a significant variable. Irradiation creep rate is a function of neutron flux, neutron spectrum, and stress. Most of the available data have been measured in fast neutron spectra. The available data for thermal reactor applications are limited.

3.1.5.2 Aging Effect Evaluation

The maximum temperature experienced by reactor internals during normal and upset conditions is approximately 650°F, except for certain localized areas where temperatures can be much higher depending on the magnitude of internal heat generation rates due to gamma heating. These temperatures are below the temperatures at which creep is a concern for any of the stainless steel and nickel-based alloy reactor internals components. Therefore, the effects of creep are not significant for any reactor internals component.

Irradiation creep is a phenomenon that occurs from the moment of first criticality in the reactor. As with thermal creep there is an initial transient, but this can be followed by a slow steady-state creep in the presence of irradiation. As with transient thermal creep, irradiation creep could contribute to stress relaxation in bolting (see Subsection 3.1.6.1.). In nonfastener applications, there has never been any evidence of irradiation creep in an operating Westinghouse PWR.

As stated previously, stress and flux are the major variables that affect the process. For a standard plant with a 12-foot core active length, axial sections of the baffle plate over a ~8-foot span have the highest flux. The areas of high stress in the baffle plates, away from bolt locations, are dominated by thermal bending stresses due to reactor coolant system (RCS) fluid variations and the impact of internal heat generation rates due to gamma heating. These stresses, in addition to those due to mechanical loads (e.g., pressure) cause the plates to deflect. The limited data available (based on conservative estimates from fast reactor data) suggest that localized regions of the baffle plate could undergo up to ~4-percent creep strain with out-in loading patterns and <3-percent creep strain with low-leakage loading patterns during the license renewal term. This does not prevent the baffle plates from performing their intended function. This judgement is supported by the fact that there have been no reported instances of difficulty, due to distortion of the baffle plates, in loading fuel into the fuel cavity and/or difficulty in lowering the upper internals package into the lower internals assembly. However, any additional movement of the baffle plates relative to the core barrel due to irradiation creep could change the loadings of the baffle/former and barrel/former bolts. Other components that could be affected by this phenomenon, such as the lower core plate, receive a

relatively low flux, and consequently a low fluence, over a restricted area of the component. Thus, with the exception of the baffle/former and barrel/former bolts, the effects of irradiation creep are not significant for any other internals components. Further aging management options for these bolts are provided in Section 4.0.

3.1.6 Stress Relaxation

3.1.6.1 Mechanism Description

Stress relaxation is the unloading of preloaded components caused by long-term exposure of internals materials to elevated temperatures and/or neutron irradiation. It occurs under conditions of constant strain where part of the elastic strain is replaced with plastic strain. At temperatures well above RCS operating temperatures, the thermal effect is predominant. It has been determined, however, that the presence of fast neutron irradiation can result in stress relaxation even at normal operating temperatures [Refs. 28 and 29]. When the irradiation effect is dominant, the rate of neutron impingement controls the number of vacancies formed in the component material. The presence of vacancies results in a creep phenomenon (see Subsection 3.1.5), which leads to the relaxation effect. Stress relaxation is particularly important in the design of bolted connections and springs.

3.1.6.2 Aging Effect Evaluation

Stress relaxation has significance only to components with substantial preloads, such as torqued bolts, because the maintenance of an adequate preload is important to their functionality. A loss of preload in such components could result in higher cyclic and transient loads and an increase in fatigue susceptibility. In some reactor internals components, stress relaxation is accounted for in the design by preload margins that are incorporated to compensate for the effects of thermal transients. Neutron irradiation can, over an extended period of time and depending on the fluence, lead to stress relaxation of preloaded components.

The influence of irradiation and temperature on stress relaxation behavior was evaluated for materials stressed at or above the yield strength and exposed to irradiation [Refs. 30 through 34]. Data showed that the thermal effects on annealed Type 304 stainless steel at temperatures below 900°F produce a stress relaxation maximum of about 18 percent [Ref. 31]. The combined effects of temperature and irradiation were reported to produce further relaxation. Evaluations showed a relaxation of 35 percent in annealed Type 304 stainless steel after irradiation at 4×10^{20} n/cm^2 ($E > 0.1$ MeV) [Ref. 34]. These data suggest that the combined effects of temperature and irradiation can potentially result in significant stress relaxation of preloaded components.

For those reactor internals components that do not depend on preload to maintain their functionality, the effects of stress relaxation are not significant in the license renewal term. The upper support column bolts, lower support column bolts, clevis insert bolts, and holddown springs have had no significant incidents of degradation in Westinghouse Owners Group (WOG) plants. Some plants with 304 stainless steel holddown springs have experienced some

relaxation. However, for some plants, there was sufficient design margin to maintain functionality and continue operation without replacement. For other plants, the spring was replaced. It is unlikely that a component that depends on preload will experience high-cycle fatigue degradation during the license renewal term if the component:

- Only experiences high-cycle loadings, and stress relaxation has occurred early in life (see Subsection 3.1.10.2)
- Has not had any degradation in the current licensing period
- Has not had any changes in configurations or loadings

Therefore, for those components that depend on preload and undergo only high-cycle loadings, the stress-relaxation/high-cycle fatigue combination will not be significant in the license renewal period. However, the effects of the stress-relaxation/low- and high-cycle fatigue combination for preloaded components are potentially significant in the license renewal term and require further aging management (see Section 4.0).

3.1.7 Wear

3.1.7.1 Mechanism Description

Wear is defined as the removal of material surface layers due to relative motion between two surfaces or under the influence of hard, abrasive particles. Wear occurs in parts that experience intermittent relative motion, in clamped joints where relative motion is not intended but may occur due to a loss of clamping force or as a result of flow-induced vibrations.

Wear that is the result of the contact of two surfaces due to vibration or sliding (e.g., flow-induced vibration) is referred to as fretting wear. Another type of wear that may occur in PWRs and that is not related to flow-induced vibration is wear associated with the intentional displacement of adjacent components, such as the stepping of control rods. Wear can result from either surface oxide removal or the direct removal of base material.

3.1.7.2 Aging Effect Evaluation

Wear was observed at the interfaces of components whose relative motion is not completely restrained. In the reactor internals components, wear between control rods and guide tubes results from the axial sliding that occurs during insertions and withdrawals, and also from the transverse motions caused by flow-induced vibration. Measurements of control rod wear imply that wear on guide tube inner surfaces also occurred.

Other components considered to be potentially susceptible to wear degradation are those that constitute the interfaces between structural components. The radial keys/clevises, and upper core plate alignment pins are examples of such interfacing components. The predominant excitation mechanism for wear of these components is flow-induced vibration, although thermal

effects can also contribute by increasing interface loads and by directly producing relative thermal displacements between interfacing components.

Wear is a potentially significant age-related degradation effect for the internals components identified in Section 4.0. For all other reactor internals components covered by this report, wear is nonsignificant including wear on the guide tube cards and drive rods. Current performance monitoring programs (i.e., rod drop time testing performed each cycle) will provide indications of any wear of the guide tube cards during the extended period of operation. Moreover, the guide tube cards can be considered a subcomponent of an active component and therefore, the cards are not subject to an aging management review for wear.

3.1.8 Thermal Aging

3.1.8.1 Mechanism Description

Thermal aging of cast stainless steel can lead to precipitation of additional phases in the ferrite, e.g., formation of Cr-rich α - prime phase by spinodal decomposition, precipitation of a Ni- and Si-rich phase, $M_{23}C_6$ carbides and growth of existing carbides at the ferrite/austenitic phase boundaries. These changes result in an increase in hardness and tensile strength and a decrease in ductility, impact strength, tearing modulus, and fracture toughness of the material. The susceptibility of ASTM A-351 grades of cast stainless steel to thermal aging is a function of the aging temperature, time at temperature, and material composition including ferrite content. Cast duplex stainless steel used in the piping of the primary pressure boundary can be susceptible to thermal aging embrittlement at operating nuclear steam supply system (NSSS) temperatures, i.e., 554°F to 617°F, if the time of exposure is sufficiently long.

The Mo-bearing cast stainless steels, such as CF-8M, exhibit a greater susceptibility to thermal aging. The cast stainless steels used in the reactor internals are ASTM A-351 Grades CF-8 and CF-8A, which contain low or zero Mo and are less susceptible to thermal embrittlement.

3.1.8.2 Aging Effect Evaluation

The cast austenitic stainless steel lower core support forging is exposed to temperatures that could potentially lead to eventual thermal aging embrittlement, provided that the term of exposure is sufficiently long and that the other factors that control the extent of embrittlement (e.g., casting process, delta ferrite, and material chemistry) are unfavorable. The degradation of cast duplex stainless, if it occurs, is manifested by a decrease in fracture toughness, tearing modulus, and impact strength at room temperature. The fracture toughness, tearing modulus, and impact strength show only a moderate decrease at operating temperatures, 554°F to 617°F.

A review of thermal aging effects shows that cast austenitic stainless steel with ferrite contents as low as 10 percent are susceptible to thermal aging. Further, the structural welds in forged material could be susceptible to thermal aging. As stated above, all the cast duplex stainless steel reactor internals in the Westinghouse-designed NSSS are made from CF-8 or CF-8A.

While CF-8 material is susceptible to thermal aging at operating temperatures (354°F to 617°F), the remaining toughness is high with a Charpy value of 64 ft-lb and fracture toughness values of 750 in.-lb/in.^{2} for J_{Ic} and 3000 in.-lb/in.^{2} for J_{max} at room temperature for material with a high ferrite content (17 percent). Fracture mechanics evaluation of primary piping demonstrates structural integrity with Charpy impact energies as low as 2 ft-lb. Increasing the thermal aging temperature accelerates the thermal aging degradation of the fracture toughness of austenitic cast stainless steels. Using test results, higher temperature thermal aging data can be used to extrapolate to longer periods of time for thermal aging at lower thermal aging temperatures. Using an acceleration factor of 15 (which is conservative) for a thermal aging time for 752°F versus 617°F can project out to 450,000 hours of operation. CF-8 cast stainless steel is expected to have a Charpy value in excess of 28 ft-lb at the end of 60 calendar years or 48 effective full-power years (EFPY).

Evaluations of cast internals components demonstrate that the effects of thermal aging for the reactor internals components are not significant and an evaluation or an aging management program for this effect will not be required during an extended period of operation.

3.1.9 Corrosion

3.1.9.1 Mechanism Description

Corrosion is an electrochemical reaction between a metal or alloy and its environment and is characterized by a deterioration of the materials. Corrosion can take several forms. General corrosion is characterized as the thinning or wastage of a material, more or less uniformly, by an aggressive environment. Pitting corrosion is commonly caused by the breakdown of the passive film on a metal, in local areas, by species such as chlorides. Crevice corrosion occurs when surfaces of materials are wetted by the corrosion medium and are covered in localized areas with debris (e.g., crud); used in contact with each other; or when a crack or crevice is permitted to exist in a component exposed to such media. Intergranular corrosion attack (IGA) can occur in certain materials, e.g., sensitized stainless steels, when exposed to aggressive environments.

3.1.9.2 Aging Effect Evaluation

The effects of corrosion damage are wall thinning, reduction of cross-sectional area, material removal, and buildup of corrosion products [Ref. 35]. The materials used in the construction of the reactor internals components are stainless steels and nickel-based alloys. These alloys are not susceptible to general corrosion or pitting in the PWR primary coolant because they passivate to form protective layers that prevent such corrosion degradation.

Crevice corrosion is an additional corrosion process that is prevented by the use of passive film forming stainless alloys and by the use of hydrogen overpressure in the primary coolant to prevent differential oxygen concentration cells during operation. The mechanism of crevice corrosion typically involves an electrochemical action between the surfaces of the crevice and those exposed freely to the environment outside the crevice [Ref. 36]. In the simplest case of an oxygenated environment, this would be a differential aeration or oxygen concentration cell

effect, with the metal within the crevice (which is shielded from free access to dissolved oxygen) becoming anodic to the outside surfaces freely exposed to the oxygen-bearing solution. The metal within the crevice that is shielded from oxygen may become active, while that outside in free contact with oxygen will maintain its passivity. The difference in potential between the active and passive states will become a driving force in the galvanic corrosion of the anode within the crevice. Differential oxygenation effects are minimized by the reduction (to essentially zero) of oxygen in the bulk coolant by the use of a hydrogen overpressure, which causes a rapid recombination with the radiolytically produced oxygen in the core [Ref. 36].

In many crevice tests conducted at elevated temperatures with different materials, it was found that the extent of crevice corrosion generally decreases with the increasing corrosion resistance of the material tested [Ref. 37]. The stainless materials used for internals manufacture have proven corrosion resistance, which accounts for their excellent crevice corrosion resistance in service. A literature survey of stainless steel corrosion revealed that the presence of crevice conditions would not greatly increase the corrosion rate in a PWR environment due to the low oxygen levels present during reactor operation [Refs. 35 and 38 through 42].

Intergranular corrosion is prevented by the avoidance of sensitization and stringent control of water chemistry, especially halogens and oxygen. Sulfur species from demineralizer resins are potential contributors to corrosion in crevices and to intergranular corrosion. However, utilities monitor any excess sulfate from demineralizer resins and take corrective actions to minimize crevice degradation.

Based on operating experience and information in the literature [Refs. 35 to 42], the effects of general corrosion, crevice corrosion, and intergranular corrosion are not significant for any reactor internals components covered in this report.

3.1.10 Time-Limited Aging Analyses (Fatigue) Evaluation

Section 2.5 identifies fatigue as the only TLAA related to the reactor internals. This section provides the overall approach that licensees will take in addressing the fatigue TLAA for the reactor vessel internals. If the TLAA cannot be dispositioned analytically, options are presented in Section 4.0 to manage the identified aging effects.

3.1.10.1 Mechanism Description

Fatigue is defined as the structural deterioration that can occur as a result of the periodic application of load or stress by mechanical, thermal, or combined effects. It has been recognized for many years that a metal subjected to a repetitive or fluctuating stress will fail at a stress much less than that required to cause fracture on a single application of load. The important factor in fatigue failure is stress repetition. The specific effects of fatigue are cracks in the material that may or may not be detected before mechanical failure. After repeated cyclic loading of sufficient magnitude, microstructural damage can accumulate, leading to macroscopic crack initiation at the most affected locations. Subsequent mechanical or thermal cyclic loading can lead to growth of the initiated crack. Reactor internals components are subject to fluctuating loads with a variety of frequencies, ranging from the relatively infrequent

(refueling) to the relatively frequent (flow-induced vibration). Components that undergo significant thermal and seismic events are potentially susceptible to low-cycle fatigue damage. Those components that are subject to a significant dynamic load associated with flow-induced vibration are potentially susceptible to high-cycle fatigue damage.

3.1.10.2 Aging Effect Evaluation

American Society of Mechanical Engineers (ASME) Code Section III fatigue design procedures use a design fatigue curve that is a plot of alternating stress range (S_a) versus the number of cycles to failure (N). The design fatigue curve is based on the unnotched fatigue properties of the material, modified by reduction factors that account for various geometric and moderate environmental effects.

The fatigue usage factor (U) is defined by Miner's rule as the summation of the damage over the total number of design basis transient types (X), as given by the ratio of expected cycles of that type (n_i) to the allowable number of cycles (N_i) for the stress ranges associated with that transient:

$$U = \sum_{i=1}^{X} \frac{n_i}{N_i} \quad 1$$

For ASME Code design acceptance, the cumulative usage factor (CUF) calculated in this manner cannot exceed unity (1.0) for the design lifetime of the component.

A recommended flowchart that provides guidance for the management of fatigue in the license renewal period is shown in Figure 4-1. Note that Figure 4-1 addresses the potential effects of the water reactor environment on fatigue through the determination of material property changes. The CLB for fatigue can be maintained in the license renewal period if it can be demonstrated that the nature and frequency of the license renewal period reactor coolant system (RCS) transients are bounded by those assumed in the CLB and that there has been no significant change in reactor internals components' material properties including environmental effects from those assumed in the CLB. However, if this is not possible, then an aging management program for fatigue for each component should be established.

Note that in Figure 4-1 some paths are reversible, that is, decisions can be reversed when another strategy selected, thus allowing a greater flexibility to include new or more complete information (e.g., test data, regulatory acceptability).

The purpose of the component fatigue evaluations is to verify that the component has a cumulative fatigue factor of less than 1.0. It is important to note that, depending on the plant specific application, there are usually several conservatisms included in these fatigue usage calculations. After a determination is made that the number and severity of the RCS transients for the license renewal term are not within the current design basis, then these conservatisms should be evaluated and/or analyzed to increase the present fatigue usage margins. In general, these conservatisms can be found in:

- Definition of RCS design transients
- Enveloping of design loadings
- Calculational methodologies

These conservatisms are discussed in the next subsections.

3.1.10.3 Conservatisms in the Design Transients

The conservatisms built into the RCS primary-side design transients consist of:

- RCS transients that are typically more severe than those experienced during service.
- RCS transients with a larger number of expected occurrences than could reasonably occur during the plant lifetime. For example, the unit loading and unloading between 15 and 100 percent transient has 13,200 to 18,600 postulated design cycles, depending on the plant. This means that a plant will be cycled through these loading and unloading cycles once every day for 40 years, which is unrealistic.

One way to address excess conservatisms in design transients is transient monitoring and cycle counting. It is important to also note that, in general, plants designed in the 1960s and 1970s have fewer RCS design transients defined than those plants designed in the 1980s. Transients that have occurred during operation or are postulated to occur in the licensee renewal term and are not bounded by the CLB transients require re-evaluation on a case-by-case basis.

3.1.10.4 Conservatisms in the Analysis

One of the conservatisms built into the analytical approach consists of performing bounding or enveloping analyses based on bounding RCS design transients and/or loadings. If it can be shown that the calculated design fatigue usage was less than 1.0 by performing a simplified bounding analysis, it is not always necessary to perform additional analysis to show that the fatigue analysis requirements can be met by a larger margin.

In addition, there are two sources of conservatisms inherent in the ASME code fatigue methodology. First, the design fatigue curves contain a factor of 2 on stress range and a factor of 20 on the number of cycles to failure. Second, a substantial margin exists because of conservatisms in the magnitude and frequency of occurrence assumed for the various design basis transients [Refs. 2, 43, and 44].

An additional source of conservatism with respect to high-cycle fatigue for internals components in operating plants is derived on the basis of the fatigue curves for typical internals materials. The stress range for cycle to failure beyond 10^6 cycles is approaching the endurance limit of the material. Typical PWR internals vibration frequencies are in the range of 5 to 10 Hz, so that an operating plant accumulates 10^9 to 10^{10} fatigue cycles in less than 32 full power years. In practical terms, this means that in the absence of changes in loading or configuration, internals

components that have not experienced high-cycle fatigue damage during the original licensing period are unlikely to experience high-cycle fatigue damage during the license renewal term.

Conservative calculations use bounding design transients and subsequent design basis stresses to estimate low-cycle fatigue accumulation for the specified transients. High-cycle fatigue analysis is proof-tested by hot functional tests. The rationale for the latter is that a component with high-cycle fatigue susceptibility is identified during hot functional testing, which induces higher flow loads without the resistance of the fuel assemblies. Any high-cycle fatigue issues that have been identified by hot functional testing have either required subsequent design or operational modifications or analyses to demonstrate the acceptability of the observed behavior.

As a result, the combined low-cycle and high-cycle fatigue usage estimates are conservatively high. These conservatisms are in addition to the ASME Code factor of 2 on stress range and 20 on cycles to failure inherent in the code fatigue curves.

Only those components which exceed a CUF of 1.0 during the license renewal period require aging management.

Table 3-3 summarizes the projected fatigue life of those reactor internals components that could reach a fatigue usage equal to the ASME design limit of 1.0 within the 40- to 60-year time period over the population of all WOG plants based on a conservative approach of extrapolating the number of design cycles by 150%. The projected fatigue life was determined assuming no changes in material properties or component loadings in the extended lifetime period. Projected Fatigue Service Life was based on a CUF=1. Table 3-3 does not represent the actual usage for the license renewal period but rather is a conservative method of screening the internals components that either are, or are not, fatigue-sensitive in the license renewal term.

As a result, only those components that are fatigue-sensitive and whose failure would prevent the internals from performing their intended functions have been included in Table 3-3. Based on this screening method, those components not included in Table 3-3 are not considered to be fatigue-sensitive.

Therefore, with the exception of those reactor internals components identified in Table 3-3 as fatigue-sensitive based on a review of calculated fatigue usage factors for internals components designed to ASME Section III, Subsection NG, a review of hot functional test data, and a comparison of geometric and operating similarities, the effects of fatigue are not significant for the reactor internals components covered in this report. Fatigue-sensitive reactor internals components that require further evaluation are discussed in Section 4.0. Note that those components which are included in Table 3-3 may, or may not, be fatigue sensitive for any specific plant, and should be evaluated on a plant specific basis.

The preferred approach, shown in the first part of Figure 4-1, is to demonstrate that the fatigue effects anticipated for the license renewal term are bounded by the fatigue effects anticipated for the original service period. This includes an assessment of the number and severity of the RCS design transients anticipated during the extended period of operation relative to those

assumed to occur in the Current Licensing Basis (CLB), and an assessment of the impact of changes to the reactor internals component material properties that may have occurred during the current licensing period.

3.1.11 Swelling

In addition to the aging effects identified for the reactor internal components in Section 2.7, swelling has been postulated from laboratory testing for LMFBRs and is discussed in the following subsections.

3.1.11.1 Mechanism Description

Swelling, frequently referred to as cavity swelling or void swelling, is defined as a gradual increase in size (dimensions) of a given reactor internals component. Reactor internals components are fabricated from materials that contain nickel and a small amount of boron. Under reactor internals irradiation conditions, helium is generated in these materials by nuclear transmutation reactions. Cavity or bubble nucleation is accounted for by the helium-vacancy cluster evolution, while void formation occurs when helium bubbles grow beyond a critical size. Helium bubbles have diameters of 2 to 3 nm or less while voids have diameters larger than 4 nm. Helium helps to stabilize small vacancy clusters and promotes nucleation of voids. After helium bubble nucleation, if the temperature is high enough, the helium bubbles grow to a critical diameter. At the critical diameter, the helium bubbles convert to bias-driven voids. Void formation results in the swelling of the material.

3.1.11.2 Aging Effect Evaluation

The effect of irradiation on stainless steel has been extensively studied in programs directed toward their use in LMFBRs, also referred to as liquid metal reactors (LMRs). These studies identified three major materials problems: void swelling, irradiation creep, and radiation-induced embrittlement. The data for PWR applications are extremely limited, and the use of LMFBR data is complicated by the effects of irradiation temperature, displacement rate, and displacement effectiveness. LMFBRs operate at higher temperatures and high displacement rates relative to those for PWRs.

During the past 30 years, swelling of PWR internals components was not considered a significant age-related degradation mechanism. However, Garner, et al. [Ref. 18] concluded that, based on LMFBR data, end-of-life exposures of some PWR internals will lead to significant levels (> 10 percent) of swelling. Foster, et al. [Ref. 19] concluded that at the approximate reactor internals end-of-life dose of 100 dpa, swelling would be less than 2 percent at irradiation temperatures between 572°F and 752°F. To date, field service experience in PWR plants has not shown any evidence of swelling.

Original core loading pattern strategies, known as "out-in" loading patterns, consisted of placing fresh fuel in all peripheral assembly core locations and burned fuel in all of the inboard assembly core locations. Peripheral assemblies are defined as those with one or two faces or one corner adjacent to the core baffle plates. Utility interest in reducing the rate of PWR vessel

embrittlement by reducing the incident fast neutron flux to the reactor vessel through fuel management and core periphery modifications has grown in recent years. In addition, the fuel cycle cost advantages of reduced core neutron leakage coupled with higher permissible core power peaking limits have resulted in fuel management strategies with significantly lower power levels in the peripheral fuel assemblies than was the case with the traditional out-in fuel management. This low-leakage loading pattern places burned fuel in some of the peripheral assembly locations and most of the fresh fuel assemblies in interior core positions.

Table 3-1 presents estimates of the representative ranges of neutron irradiation for the baffle plates for both types of loading patterns and at either the 40- or 60-year design life.

The relative vertical displacements of the baffle plates and the core barrel due to swelling will be defined by the average irradiation on the components. Therefore, bolt stresses from swelling due to the relative motion of the baffle plates and the core barrel can be described by the average irradiation values in Table 3-1. Using the data from Table 3-1 and Reference 19, the differential swelling could approach 1 percent at 60 years life for the out-in loading pattern and 0.5 percent for the low-leakage loading pattern. The maximum irradiation values in Table 3-1 will be the values that cause baffle/former bolt loadings due to local swelling. This localized effect results from the differential swelling between the 304 stainless steel baffle plate and the bolt materials, which exhibit much less swelling. Actual data to evaluate this are scarce but the available data suggest that this swelling could approach 3 percent at 60 years life for the out-in loading pattern and 1-2 percent for the low-leakage loading pattern for a limited number of baffle/former bolts.

It is important to note that:

- Estimates using the available data indicate that the maximum swelling in PWR internals components is significantly less than the 10-percent value predicted by Garner, et al. [Ref. 18]

- The continued utilization of low-leakage loading patterns will reduce the irradiation dose and hence the differential swelling and loadings on the bolts in the baffle/barrel region

- The magnitude of swelling will be mitigated by stress relaxation and irradiation creep within the bolt

- There exists a limited amount of data to estimate the swelling percentage as a function of dpa level

Plants now use some form of low-leakage loading pattern for their core management strategy. Therefore, it is judged that swelling of the baffle plates, former plates, and core barrel will not prevent them from performing their intended function during the license renewal term.

Moreover, careful core management strategies can reduce the dpa dose levels in the baffle/barrel region structures to levels in which the effects of swelling on the loadings of the baffle/barrel bolts are either not significant or are limited to a small number of bolts. In either

case, the intended functions of the baffle/former and barrel/former bolts would not be significantly degraded by swelling.

Industry data of swelling are currently being evaluated as part of WOG and MRP programs. At present, there have been no indications from the different bolt removal programs or from any of the other inspections and function evaluations that there are any discernible effects attributable to swelling, An industry position to consider the accumulated data, engineering evaluations of the ramifications of swelling, and the field observations is presently scheduled to be complete in 2001.

3.2 AGING EFFECT MANAGEMENT SUMMARY

A summary of the aging effect evaluations is provided in this section. In addition, the aging effects that must be adequately managed in the license renewal period, along with the applicable aging management program (AMP) tables (see Section 4.0), the supporting program options, and the supporting TLAAs are provided (see Sections 4.1 and 4.2).

3.2.1 Irradiation Embrittlement

The effects of irradiation embrittlement are potentially significant for those reactor internals components fabricated from austenitic stainless steel and nickel-based alloy materials that experience neutron fluences. For the more susceptible materials, such as 304SS, effects have been seen to initiate at fluences as low as 1×10^{21} n/cm^2 (E > 0.1 MeV). For reactor internals components not exceeding this threshold value, irradiation embrittlement is nonsignificant since the changes in mechanical properties due to the neutron exposure are insignificant. Therefore, for those components, aging management for this effect will not be required during an extended period of operation (see Subsection 3.1.1). For those components that experience neutron fluences greater than the threshold value, this effect is discussed in Subsection 4.1.1, AMP-4.1. Further evaluation for the baffle/former and core barrel/former bolts is discussed in Subsection 4.2.2, AMP-4.6 and AMP-4.7.

3.2.2 Stress Corrosion Cracking

Initiation and propagation of SCC requires three factors to be present: a susceptible material, a corrosive environment, and the presence of tensile stresses. Westinghouse specifies that the reactor coolant be rigorously controlled, particularly with regard to oxygen, chlorides, and other halogens. Slowly cooling austenitic 304 stainless steel through the temperature range of 900EF to 1700EF can result in the sensitization of the material. Stickler and Vinckier [Ref. 23] showed that the different forms that carbide precipitate takes at various temperatures determine the intergranular corrosion characteristics of stainless steel. Therefore, a few of the early WOG plants fabricated before Westinghouse limited the post-weld stress-relief heat treatment temperature may have reactor internals with various degrees of sensitized material. While a few WOG plants may have reactor internals fabricated from a material that is sensitized, the absence of an aggressive or corrosive environment renders these reactor internals resistant to SCC or intergranular attack. Therefore, the degradation sustained from SCC and intergranular attack is nonsignificant and will not keep the reactor internal components from maintaining their

intended functions. Therefore, aging management for this effect will not be required during an extended period of operation (see Subsection 3.1.2).

3.2.3 Irradiation-Assisted Stress Corrosion Cracking

The effects of IASCC are potentially significant for reactor internals components that are fabricated from the more susceptible materials and are subjected to fluence above 1×10^{21} ($E > 0.1$ MeV). For those components that are subjected to fluence below this level, aging management for this effect will not be required during an extended period of operation (see Subsection 3.1.3). For those components that experience neutron fluences greater than the threshold value, this effect is discussed in Subsection 4.1.1, AMP-4.1. IASCC was a major contributor to baffle/former bolt cracking in the French and Belgian plants. Further evaluation for the baffle/former and core barrel/former bolts is presented in Subsection 4.2.2, AMP-4.6 and AMP-4.7.

3.2.4 Erosion and Erosion/Corrosion

The effects of erosion and erosion/corrosion are nonsignificant to all of the reactor internals components covered by this report (see Subsection 3.1.4). Therefore, aging management for these effects will not be required during an extended period of operation.

3.2.5 Creep/Irradiation Creep

The effects from creep are nonsignificant to all of the reactor internals components covered by this report (see Subsection 3.1.5). Therefore, aging management for creep will not be required during an extended period of operation.

Effects from irradiation creep may occur in the baffle plates. This will not prevent the baffle plates and core barrel from performing their intended function. Changes in the relative movement between the baffle plates and core barrel, due to irradiation creep, may change the loadings of the baffle/former and barrel/former bolts. This is addressed in Section 4.0.

3.2.6 Stress Relaxation

The effects of stress relaxation are potentially significant to components with substantial preloads, such as springs and torqued bolts, because the maintenance of an adequate preload is important to their functionality. For reactor internals components that do not depend on preload for functionality and/or experience only high-cycle fatigue loadings, stress relaxation is nonsignificant (see Subsection 3.1.6), and aging management for this effect will not be required during an extended period of operation. For those bolts and springs that experience low- and high-cycle fatigue loadings, this effect is discussed in Subsection 4.1.2, AMP-4.2. Further evaluation for the baffle/former and core barrel/former bolts is discussed in Subsection 4.2.2, AMP-4.6 and AMP-4.7.

3.2.7 Wear

The effects of wear are potentially significant at the interfaces of components having relative motion. Further evaluation of these components is provided in Subsection 4.1.3, AMP-4.3 and AMP-4.4. For all other reactor internals components, wear is nonsignificant (see Subsection 3.1.7), and aging management of this effect will not be required during an extended period of operation.

3.2.8 Thermal Aging

The effects of thermal aging are nonsignificant to all of the reactor internals components covered by this report (see Subsection 3.1.8), and aging management of this effect will not be required during an extended period of operation.

3.2.9 Corrosion

Composition of the material, oxygen content, hydrogen content, pH, and temperature are important in the consideration of crevice corrosion. At the operating temperature of reactor internals, the extent of crevice corrosion generally decreases with increasing corrosion resistance of the materials used for manufacture of the components. Nickel-based alloys are subject to slight pitting in crevice areas, whereas austenitic stainless steel is not subject to pitting and waste. Hydrogen overpressure minimizes the adverse effects of any oxygen that may be present due to startup or cooldown of the reactor system, thus preventing or controlling crevice corrosion. In addition, sulfur ingress from the demineralizer resins are monitored by WOG utilities. Therefore, the effects of crevice IGA as well as crevice corrosion are not significant (see Subsection 3.1.9), and aging management of this effect will not be required during an extended period of operation.

3.2.10 Fatigue

The effects of fatigue require an evaluation only for reactor internals components which would be projected to exceed a CUF of 1.0 during the extended period of operation. This determination of fatigue-sensitive components should be based on a review of calculated fatigue usage factors for internals components, a review of hot functional test data, and a comparison of geometric and operating similarities. For all other reactor internals components covered by this report, the effects of fatigue are not significant (see Subsection 3.1.10), and an evaluation or an aging management program for this effect will not be required for these components during an extended period of operation. For those components that would be projected to exceed a CUF of 1.0, this effect is discussed in Subsection 4.2.1, AMP-4.5. Further evaluation of the baffle/former and core barrel/former bolts is discussed in Subsection 4.2.2, AMP-4.6 and AMP-4.7.

3.2.11 Swelling

The effects of swelling can be potentially significant for those components which experience significant neutron irradiation while operating at elevated temperatures. However, actual plant

operations do not appear to produce the conditions necessary for significant swelling. Fuel management schemes to reduce neutron leakage from the core have reduced one of the major factors contributing to swelling, and mechanisms such as creep and stress relaxation serve to reduce some of its adverse effects. It is judged that any actual swelling of the baffle plates, former plates, and core barrel will not prevent them from performing their intended function during the license renewal period.

The data on swelling are currently being evaluated and more data are being generated as part of WOG and MRP programs. At present there have been no indications from the different bolt removal programs or from any of the other inspection and functional "evaluations" (e.g., refueling) that there are any discernible effects attributable to swelling. The industry position to consider the accumulating microscopic data, the engineering evaluations of the ramifications of swelling and the field observations is presently scheduled to be complete in 2001.

TABLE 3-1
ESTIMATES OF REPRESENTATIVE NEUTRON IRRADIATION RANGES FOR BAFFLE PLATES

Loading Pattern	Out-In		Low Leakage	
Life (years)	40	60	40	60
Average (dpa)	37-49	56-73	15-33	23-49
Maximum (dpa)	57-109	83-163	23-74	35-110

TABLE 3-2
MATERIAL PROPERTIES FOR TYPE 316 CW STAINLESS STEEL
[Ref. 20]

Test Temperature (°F)	Fluence x 10^{21} (n/cm2)	Yield Stress (MPa)	Ultimate Uniform Stress (MPa)	Uniform Elongation (%)	Total Elongation (%)	Fracture Toughness J_{Ic} (KJ/m2)	Tearing Modulus T
73	Unirradiated	683	793	10	21	–	–
73	75	938	1151	6	13	–	–
572	75	952	1000	0.8	7	–	–
662	Unirradiated	–	–	–	–	204	355
662	3.0	–	–	–	–	78	39
662	4.9	–	–	–	–	46	44

TABLE 3-3
SUMMARY OF PROJECTED FATIGUE SERVICE

Component	Projected Fatigue Service[1] (years)
Lower Core Plate	47
Lower Support Plate	46
Radial Key Weld	43
Core Barrel Nozzle Weld	45
Baffle/Barrel-Former Bolts	54[2]
Guide Tubes/Flow Downcomers	42
Upper Support Plate Assembly	48

Notes:

(1) Projected fatigue service is based on:
   a) No changes in material properties and loadings
   b) Calculated fatigue usage for 40 years extrapolated to the ASME Code fatigue limit of 1.0
   c) Exclusion of components exceeding fatigue limit of 1.0 but not challenging the intended functions

(2) Based on failure curve

4.0 AGING MANAGEMENT ACTIVITIES AND PROGRAM ATTRIBUTES

This section provides options to manage aging effects during an extended period of operation. Since this report is generically applicable, only program attributes are given. Plant-specific details will be developed during the preparation of license renewal applications. Plant-specific programs developed by utilities will demonstrate that aging effects are managed; therefore, the reactor internals intended functions will be maintained during an extended period of operation.

Section 3.0 identifies aging effects and time-limited aging analyses (TLAAs) that require management during an extended period of operation. Section 4.1 provides current industry practices, and Section 4.2 provides additional activities and attributes, including TLAAs, required to manage aging effects.

Details and implementation guidance are provided. Alternatives to the attributes provided in this section will require descriptions and justifications in plant-specific license renewal applications. Aging management attributes are summarized by aging management program (AMP) tables (see Table 4-1). These tables summarize program attributes and activities that form the basis for programs implemented by utilities during an extended period of operation.

A license renewal applicant intending to take credit for the effective program is responsible for the review/evaluation of their related plant-specific features, including appropriate current licensing basis (CLB) documents/information, to ensure that the program attributes used to manage the aging effects are committed for use at their plant. Programs to manage aging effects that are not part of this report will require plant-specific evaluations, analyses, and justifications.

4.1 CURRENT ACTIVITIES AND PROGRAM ATTRIBUTES

The following aging effects were found to be insignificant and were resolved relative to license renewal considerations for all reactor internals components, as defined in Section 1.2:

- Cracking and material degradation due to corrosion/stress corrosion cracking (SCC)
- Material wastage due to erosion and erosion/corrosion
- Thermal aging-related cracking of austenitic stainless steel castings

These effects were determined to be nonsignificant because either:

- The component is not susceptible to the aging effect under consideration, or
- The component is susceptible to such a small degree that the component's intended function would be maintained throughout the license renewal term

The program activities and attributes that manage the remaining effects (listed in Section 2.7) are provided in the following subsections and in Section 4.2.

4.1.1 Aging Management Program for Irradiation Embrittlement and Irradiation-Assisted Stress Corrosion Cracking (AMP-4.1)

Neutron irradiation embrittlement was identified in Subsection 3.2.1 as capable of causing changes in the mechanical properties of stainless steel and nickel-based alloys used in the reactor internals. Changes that occur in mechanical properties are increases in the yield and ultimate strength and corresponding decreases in ductility and fracture toughness. The effect of irradiation embrittlement, by itself, does not result in the initiation of cracking in reactor internals components, but it decreases the resistance to crack propagation.

The effects of irradiation-assisted SCC (IASCC) were identified in Subsection 3.2.3 as also potentially significant.

Reactor internals components most susceptible to the effects of irradiation embrittlement and IASCC are those nearest the reactor core. These are listed in Tables 4-2, 4-7, and 4-8. The aging management activities and program attributes for irradiation embrittlement and IASCC have been combined since the aging effect for both is cracking.

Inspection activities being performed and maintenance management programs being pursued to meet current licensing and industry issue requirements need to continue. It is important to note an American Society of Mechanical Engineers (ASME) Section XI subgroup is working on rules for the inservice inspection (ISI) of core support and internal structures. Draft sections (from the July 1996 revision to Subsection IWG), developed by this subgroup, have been included in the program attribute tables in Section 4.0 (i.e., Tables 4-2, 4-3, 4-5, 4-6, 4-7, and 4-8) along with the present IWB subsections.

Examination Category B-N-3 of Section XI, Subsection IWB, provides requirements for the visual (VT-3) examination of "removable core support structures" of pressurized water reactors (PWRs). These requirements refer to the relevant conditions defined in IWB-3520.2 that include "loose, missing, cracked, or fractured parts, bolting, or fasteners." If any relevant condition is detected, IWB-3142 provides options for correcting the relevant condition, such as: (1) acceptance by supplemental surface and/or volumetric examination to characterize the indication more accurately; (2) acceptance by analytical evaluation that may involve more frequent examination of the item; or (3) acceptance by replacement of the item. All records generated by corrective actions and inspections will be maintained in accordance with administrative procedures.

The ASME Section XI examination previously described, as supplemented when relevant conditions are detected, can manage the effects of irradiation embrittlement and IASCC for the reactor internals components listed in Table 4-2 even though the fluence levels in 60 years of total service may exceed the threshold fluence level given in Subsections 3.3.1 and 3.3.3. The effects of cracking for the Table 4-2 components are managed since the components are accessible or can be rendered accessible by the removal of the core and/or other internals for examination. Note that the baffle/former and barrel/former bolts are not included in Table 4-2.

Subsection 2.6.2 refers to baffle/former bolt cracking in French and Belgian reactors attributed possibly to IASCC. The fluence level at these bolts in 60 years' total service will exceed the threshold level given in Subsection 3.3.3. Moreover, the bolt stresses are high and ASME Section XI examinations cannot always detect cracking. Therefore, the effects of irradiation embrittlement and IASCC are potentially significant for baffle/former and barrel/former bolts. The barrel/former bolts have been included in this category because they exceed the fluence level threshold, are in the same assembly and also have high tensile stresses. The aging management program for the baffle/former and barrel/former bolts is discussed in Section 4.2.

As a result of the current examinations of internals components, the data being developed from the materials from these components and from the PWR Materials Reliability Project, and on an evaluation of the fluence and loading on these components, modified guidance for managing the effects of irradiation embrittlement and IASCC may be developed by the industry. Any changes to the current programs will be reflected in plant specific license renewal applications.

4.1.2 Aging Management Program for Stress Relaxation (AMP-4.2)

Stress relaxation is an age-related mechanism caused by long-term exposure to elevated temperatures and/or neutron irradiation. The effect is unloading of preloaded components. Stress relaxation only has significance to components with substantial preload, such as torqued bolts, because the maintenance of an adequate preload is important to their functionality. A loss of preload could result in higher cyclic and transient loads and an increase in fatigue susceptibility. The reactor internals components that are affected by the stress relaxation effects are listed in Table 4-3.

Examination Category B-N-3 of ASME Section XI, Subsection IWB, provides requirements for the visual (VT-3) examination of accessible surfaces of PWR core support structures that can be removed from the reactor vessel. These requirements refer to the relevant conditions defined in IWB-3520.2, which include "loose, missing, cracked, or fractured parts, bolting, or fasteners." Since the manifestation of excessive stress relaxation is expected to be loose, cracked, or missing bolts or fasteners and, in the case of spring relaxation, wear would become evident, the VT-3 examination is adequate for the detection of significant stress relaxation and loss of preload in these cases for those components that are accessible (e.g., support column bolts). If any relevant condition is identified, IWB-3142 provides options for the timely correction of the problem, such as: (1) acceptance by supplemental surface and/or volumetric examination to further characterize the condition; (2) acceptance by corrective measures (e.g., re-establishing the preload) or repairs; and (3) acceptance by replacement of the item.

The use of neutron noise monitoring (excore detectors) in combination with ISI is a valuable tool to track/observe core barrel vibration. A continuation of the above monitoring and ISI would prevent relaxation of the holddown spring and clevis insert bolts from becoming a significant license renewal issue.

For the case where the relevant conditions of Examination Category B-N-3 of Section XI, Subsection IWB, may be unable to detect significant stress relaxation and loss of preload and the assurance of functional capability cannot be guaranteed, the alternatives for managing the

stress relaxation effect are described in Section 4.2. Barrel/former and baffle/former assembly bolts have been deemed to be in this category (see Subsection 4.2.2).

With these exceptions, visual (VT-3) inservice examination of reactor internals components (in accordance with the requirements of Examination Category B-N-3 of Section XI, Subsection IWB) that require adequate preload to perform their function assists in managing the effects of stress relaxation, provided that such components are accessible or can be rendered accessible by the removal of the core and/or other internals for the examination. Therefore, except for the baffle/former and barrel/former bolts, further aging management of this effect will not be required during an extended period of operation.

4.1.3 Aging Management Program for Wear (AMP-4.3 and AMP-4.4)

The AMP attributes for wear are shown in Tables 4-4 and 4-5. Two tables are used because each set of components has its own set of attributes. Wear is identified as potentially significant for internals components. The exclusion of the rod cluster control assembly (RCCA) guide tube cards relative to wear is discussed in Subsection 3.2.7. The bottom-mounted instrumentation (BMI) flux thimbles are addressed in Table 4-4. Table 4-5 contains the aging management activities and attributes for wear of the upper core plate alignment pins and the radial keys and clevis inserts.

The eddy-current technique (ECT) is a volumetric technique that reads changes in the "volume" of the thimble wall. After proper calibration, eddy current can provide an appropriate nondestructive measurement of the condition of the flux thimbles. BMI thimble tubes are replaceable components in the event wear becomes excessive, and in some cases, the replacement hardware has incorporated some design changes. These cases illustrate the capability of inspection in recognizing the wear and allowing for corrective actions to be taken in a timely manner.

For the upper core plate alignment pins, radial keys, and clevis inserts, inspection and surveillance such as neutron noise would provide information in a timely manner.

Examination Category B-N-3 of Section XI, Subsection IWB, provides requirements for the visual (VT-3) examination of accessible surfaces of core support structures that can be removed from the reactor vessel. These requirements refer to the relevant conditions defined in IWB-3520.2, which include "wear of mating surfaces that may lead to loss of function." Since the manifestation of excessive wear is expected to be wear of mating surfaces that may lead to loss of function, the VT-3 examination is adequate for the detection of significant wear. If any relevant condition is identified, IWB-3142 provides options for the timely correction of the condition, such as acceptance by supplemental examination (e.g. surface examination with ECT) or repairs.

Wear between two surfaces subject to relative motion is detectable by visual inspection long before the effects of wear begin to compromise the structural integrity or function of the component. If it is determined that excessive wear has taken place, by visual inspection or Code-defined alternate nondestructive examination (NDE) means, a subsequent wear

evaluation can be performed to determine the need for refurbishment or repair of the worn areas.

Therefore, visual (VT-3) inservice examination of reactor internals components that may have relative motion with respect to adjacent surfaces, in accordance with the requirements for Examination Category B-N-3 of Section XI, Subsection IWB, is able to manage the effects of wear.

Most of the key upper internals wear areas are available for ISI during the refueling cycle and all key areas are available for inspection during the total ISI period. However, the radial keys and clevis inserts (lower internals assembly to vessel support) may be inspected at longer time intervals. If sufficient wear occurs at this support, it could manifest itself by a different structural response that will be picked up on the excore detectors. Comparison with previous records over time signals abnormal behavior. Thus, degradation can be detected before function is compromised.

BMI flux thimbles that were worn were either repositioned or replaced with stiffer tubes, and reduced BMI guide clearances successfully reduced thimble tube wear.

Therefore, examination and surveillance of these components manage the effects of wear, and further aging management will not be required during the license renewal period.

4.2 ADDITIONAL ACTIVITIES AND PROGRAM ATTRIBUTES

4.2.1 Aging Management Program for Fatigue (AMP-4.5)

The AMP attributes for fatigue are shown in Table 4-6.

Both main assemblies, upper internals, and lower internals can be removed for inspection. Examination Category B-N-3 of Section XI, Subsection IWB, provides requirements for the visual (VT-3) examination of accessible surfaces of core support structures that can be removed from the reactor vessel. These requirements refer to the relevant conditions defined in IWB-3520.2, which include "loose, missing, cracked, or fractured parts, bolting, or fasteners." Since manifestation of excessive fatigue damage is expected to be fatigue crack initiation on the surface of an affected item, the VT-3 examination is adequate for the detection of significant fatigue damage. If any relevant condition is identified, IWB-3142 provides options for the timely correction of the condition, such as: (1) acceptance by supplemental surface and/or volumetric examination to characterize the indication more accurately; (2) acceptance by analytical evaluation, which may include flaw evaluation and/or more frequent examination of the item; and (3) acceptance by corrective measures, repairs, or replacement.

For those cases when fatigue-sensitive components are essentially inaccessible to inservice examination, in accordance with Examination Category B-N-3, and where the cyclic loadings are sufficiently uncertain to preclude the effective use of detailed fatigue design analysis, alternatives for managing the effects of the age-related degradation are described in

Section 4.2. Barrel/former and baffle/former assembly bolts are in this category (see Subsection 4.2.2).

To summarize, while aging management options for fatigue depend on the final United States Nuclear Regulatory Commission (U.S. NRC) position for license renewal, a flowchart, as outlined in Figure 4-1, provides guidance for the management of fatigue in the license renewal term.

The primary step is to demonstrate that the fatigue effects anticipated for the license renewal term are bounded by the fatigue effects anticipated for the original service period. Included in this step is the assessment of the number and severity of the RCS design transients anticipated during the extended period of operation relative to those assumed to occur in the CLB. Also included in this step is the assessment of the impact of changes to the reactor internals component material properties that may have occurred during the current licensing period.

Acceptable results from this step will indicate whether the component(s) can continue to operate during the extended period of operation in conjunction with the requirements of Examination Category B-N-3 of Section XI, Subsection IWB. Unacceptable results from this step would lead to the development of a fatigue license renewal strategy. Development of this fatigue strategy could include:

- Evaluation of conservatisms in the fatigue evaluations to increase fatigue margins
- Review of actual plant RCS primary-loop transient data to assess the actual number and severity of actual plant transients
- Re-evaluation of the cumulative fatigue usage factor for the license renewal term in accordance with the procedures of Section III, Subsection NG-3200
- Performance of a consequences of failure analysis
- Application of risk-based technology
- Application of fracture mechanics technology
- Monitoring, inspection, diagnostics, and testing

4.2.2 Aging Management Program for Baffle/Former and Barrel/Former Bolts (AMP-4.6 and AMP-4.7)

The reactor core is surrounded by a series of vertical plates, called baffle plates, that form a boundary to ensure that a high concentration of flow can be maintained in the core region. These vertical plates are supported by horizontal plates, called former plates, that are supported by the core barrel. The bolts that attach the baffle plates to the former plates are referred to as "baffle/former" bolts. Similarly, the bolts that attach the former plates to the core barrel are referred to as "core barrel/former" or "barrel/former" bolts.

The baffle plate/former plate assembly provides the transition from the core region geometry to the cylindrical core barrel and also the lateral support for the core during a seismic or loss-of-coolant-accident (LOCA) event. The operating and maintenance history for the baffle/former and barrel/former bolts, including the cracking of the baffle/former bolts in French and Belgian plants, and the degradation of barrel/former bolts observed in only one Westinghouse domestic plant, is presented in Subsection 2.6.2.

Although the accumulated fluence for the baffle/former bolts is approximately one order of magnitude greater than the fluence for the barrel/former bolts, the barrel/former bolts also exceed the threshold for potentially significant irradiation embrittlement and IASCC effects. Moreover, the barrel/former bolts are part of the same assembly. Therefore, both the baffle/former and the core barrel/former bolts are subject to the following aging effects that require augmented aging management during the license renewal term:

- Loss of toughness due to irradiation embrittlement
- Cracking due to IASCC
- Loss of bolt preload due to stress relaxation (creep/irradiation creep)
- Fatigue-related cracking

In addition, the impact of the different effects of internal heat generation due to gamma heating, RCS fluid transients, possible irradiation creep [Refs. 27 and 45 to 47] and possible swelling [Ref. 19] between the baffle plates and core barrel could induce additional stresses in both the baffle/former and barrel/former bolts. As a result, the baffle and barrel bolts are also subject to irradiation creep and swelling aging effects that need to be managed for the license renewal term. The AMP attributes for these effects on the baffle/former and barrel/former bolts are shown in Tables 4-7 and 4-8, respectively.

A visual examination of the reactor internals components is performed periodically by each utility as required by the ASME Code Section XI. The objective is to discover relevant conditions including distortion, cracking, loose or missing parts, wear, or corrosion. If a relevant condition is discovered, an evaluation must then follow to determine the effect on functional integrity and any action that may be required to maintain functionability.

The present surveillance techniques include:

1) Visual (VT-3) examination, in accordance with Examination Category B-N-3 of the ASME Code Section XI, Subsection IWB (and the draft Subsection IWG)

2) Loose parts detection monitoring system

3) Reactor coolant (RC) chemistry monitoring system

When relevant conditions are detected by the VT-3 examination of Examination Category B-N-3, the ASME Code (Section IWB-3142) provides options for correcting the relevant condition, such as:

1) Supplemental examinations (e.g., enhanced visual inspection (VT-1), surface inspections, or volumetric inspections) to characterize the indication more accurately,

2) Analytical justification for continued service of the affected component that may involve more frequent examination, or

3) Repair/replacement of the component.

Unfortunately, only the heads of the baffle/former bolts are visible, within a locking device, when the adjacent fuel assemblies are removed. Limited access is provided to the heads of the barrel/former bolts via the specimen basket access plugs with greater access obtained with the removal of the lower internals assembly from the vessel. However, access to the barrel/former bolts is still relatively limited for those barrel bolts within the core axial length for those plants that have a cylindrical thermal shield and in those plants that have neutron panels bolted to the outer surface of the core barrel. Moreover, the cracking of the baffle/former bolts in Europe occurred under the head of the bolt. Therefore, with the locking devices in place, VT-3 examinations, by themselves, will not detect the cracking.

The most likely consequence of significant degradation of the baffle/former bolts during normal reactor operation is fuel degradation due to flow leakage through the gaps between adjacent baffle plates (i.e., baffle jetting). Increases in coolant activity, as measured by the RC chemistry program, that suggest degradation of fuel located adjacent to baffle joints might indicate baffle/former bolt degradation. Plants with a "downflow" baffle/barrel region flowpath are the most susceptible to baffle jetting-related fuel degradation. In these "downflow" plants, the differential pressure acting across the baffle plate varies from a large value near the top of the core to a small value near the bottom of the core. Therefore, baffle/former bolt degradation may be indicated in these "downflow" plants if the degradation results in larger- than-designed baffle plate joint gaps, thus allowing sufficient momentum of the baffle plate joint jetting to result in adverse effects on the peripheral assembly fuel rods. For the other Westinghouse plants that have either an "upflow" or a "converted upflow" baffle/barrel region design, the pressure differential across the baffle plate is small, which then reduces the effectiveness of an RC chemistry system to detect baffle/former bolt degradation. The only other known consequence for normal operation of a plant with degraded baffle/former bolts is increased core bypass flow associated with an increase in baffle gap flow leakage and its effect on the magnitude of core flow.

For faulted event operating conditions, such as postulated LOCA blowdown events where rapid core depressurization occurs, the baffle/former bolts experience loads due to the differential pressure across the baffle plates. If some of the bolts on a given baffle plate are degraded, this increases the potential for failure of the remaining baffle/former bolts since the loads on those bolts will be increased. Failure of the baffle/former bolts may then lead to baffle plates impacting against the adjacent fuel assemblies. If the impact loads exceed the load-carrying capacity of the fuel assembly grids, a potential question could be the effect on coolability of the reactor core, which is a reactor internals intended function.

The initial French experience with degraded baffle/former bolts occurred in a "downflow" baffle/barrel-region-flow design plant and manifested itself in the form of fuel rod degradation due to baffle jetting, which then led to baffle plate joint gap inspections. These inspections indicated baffle joint gaps greater than those specified by design and resulted in an augmented (ultrasonic) examination of the baffle/former bolts. Therefore, for this plant, visual fuel assembly inspections during refueling in conjunction with the reactor coolant chemistry detection systems during normal reactor operation provided timely detection. However, the most susceptible Westinghouse domestic plants to baffle jetting-related fuel degradation have been converted to upflow and the remaining domestic Westinghouse "downflow" plants have full-length baffle-to-baffle plate edge bolting on most of the baffle plate joints. Therefore, the present surveillance techniques (i.e., visual, chemistry, loose parts detection) may not be sufficient to detect baffle/barrel region bolt cracking.

Ultrasonic testing (UT) of the baffle/former and barrel/former bolts could be utilized to supplement the present surveillance techniques. The UT techniques, such as the cylindrically guided wave technique, use transducers that emit ultrasonic waves that travel through solids and liquids at different velocities. Surface, or creeping, waves travel at slower velocities than longitudinal waves, thus offering the potential for improved resolution in the sizing of the surface defects. Based on the impedance differences between solids and liquids, and the form of the ultrasonic signal, UT devices and signal processing equipment can identify the presence of fluid-filled gaps (i.e., component flaws) in ultrasonic wave paths. Once developed and calibrated appropriately, UT is an accurate and reliable inspection method for detecting flaws at critical bolt locations. However, UT techniques for the baffle/former and barrel/former bolts must be customized for specific geometrical configurations, i.e., the presence of locking devices to the fastener heads and/or accessibility restrictions. It is important to note that under certain conditions (i.e., the plant-specific baffle/barrel region design configuration and loadings), the UT acceptance requirements may be limited to the detection of complete bolt separation (GO/NO GO testing) rather than both detection and sizing of the defects.

The acceptance criteria presented in Tables 4-7 and 4-8 relate to:

1) Maintaining peak clad temperatures (PCT) below 2200°F

2) Maintaining core flow greater than the minimum required

3) Maintaining coolant activity levels below technical specification limits

4) Following the fatigue management plan in Figure 4-1

Based on the aging effects identified and current industry initiatives, it is recognized that enhanced inspections beyond present Section XI requirements may be required to manage the effects of aging on Baffle/Former and Barrel/Former bolts for extended periods of operation. Tables 4-7 and 4-8 provide a general path to manage the aging effects on the Baffle/Former and Barrel/Former bolts during the license renewal period. The details of these enhanced inspections will be provided in the aging management programs described in plant specific license renewal applications based on the best information available at that time from the industry programs.

TABLE 4-1
AGING MANAGEMENT PROGRAM ATTRIBUTES

Attribute	Description
Scope	Structures, components, or subcomponents and applicable aging effects.
Surveillance Techniques	Monitoring, inspection, and testing techniques used to detect effects.
Frequency	Time period between program performance or when a one-time inspection must be completed.
Acceptance Criteria	Qualitative or quantitative criteria that determine when corrective actions are required.
Corrective Actions	Actions to further analyze, prevent, or correct consequences of the effect. Corrective actions should include evaluation of failures to determine where similar effects may occur and actions, if practical, to mitigate or eliminate the effect from occurring.
Confirmation	Post-maintenance test or other techniques to confirm that the actions have been completed and are effective.

TABLE 4-2
AGING MANAGEMENT ACTIVITIES AND PROGRAM ATTRIBUTES FOR IRRADIATION EMBRITTLEMENT AND IRRADIATION-ASSISTED STRESS CORROSION CRACKING (AMP-4.1)

Attribute	Description
Scope	Effects of cracking due to irradiation embrittlement and IASCC for: • Core barrel in core active region • Baffle plates • Former plates • Lower core plate • Fuel pins in lower core plate • Lower support forging[1]
Surveillance Techniques	• Visual examination per ASME Section XI, Subsection IWB, Examination Category B-N-2/ B-N-3, and Draft Subsection IWG • Loose parts monitoring • Supplemental examination (e.g., ultrasonic examination)
Frequency	ASME Section XI for visual examination, IWB-2410, -2411, -2412, -2420, -2430, and Draft IWG-2410, -2420, -2430
Acceptance Criteria	As defined by ASME Section XI, IWB-3520.2, Draft IWG-3510, -3520, -3530
Corrective Actions	Options per ASME Section XI, IWB-3142, Draft IWG-3142
Confirmation	Acceptance to ASME Section XI criteria

Note:

1. For 14-foot core only

TABLE 4-3
AGING MANAGEMENT ACTIVITIES AND
PROGRAM ATTRIBUTES FOR STRESS RELAXATION
(AMP-4.2)

ATTRIBUTE	DESCRIPTION
Scope	Stress relaxation effects leading to loss of preload leading to wear and/or loss of preload leading to cracking on: • Upper support column bolts • Lower support column bolts • Holddown spring • Clevis insert bolts
Surveillance Techniques	• Visual examination per ASME Section XI, Subsection IWB, Examination Category B-N-3, and Draft Subsection IWG • Loose parts monitoring • Supplemental examinations (e.g., ultrasonic testing) • Neutron noise monitoring
Frequency	ASME Section XI for visual examination, IWB-2410, -2420, -2430, Draft IWG-2410, -2420, -2430
Acceptance Criteria	As defined by ASME Section XI, IWB-3520.2, Draft IWG-3510, -3520, -3530
Corrective Actions	Options per ASME Section XI, IWB-3142, Draft IWG-3142
Confirmation	Acceptance to ASME Section XI criteria

TABLE 4-4
AGING MANAGEMENT ACTIVITIES AND PROGRAM ATTRIBUTES FOR WEAR
(AMP-4.3)

Attribute	Description
Scope	Effects of wear leading to loss of material on: • BMI flux thimbles
Surveillance Techniques	• Ultrasonic examination • Eddy current
Frequency	• Per response to I&E Bulletin 88-09
Acceptance Criteria	• Per response to I&E Bulletin 88-09
Corrective Actions	• Vertical repositioning or replacement
Confirmation	Per commitments in response to I&E Bulletin 88-09

TABLE 4-5
AGING MANAGEMENT ACTIVITIES AND PROGRAM ATTRIBUTES FOR WEAR
(AMP-4.4)

Attribute	Description
Scope	Effects of wear leading to loss of material on: • Upper core plate alignment pins • Radial keys and clevis inserts
Surveillance Techniques	• Visual examination per ASME Section XI, Subsection IWB, Examination Category B-N-3, and Draft Subsection IWG • Neutron noise monitoring • Comparison of neutron noise records
Frequency	• ASME Section XI for visual examination, IWB-2410, -2420, -2430, Draft IWG-2410, -2420, -2430
Acceptance Criteria	As defined by ASME Section XI, IWB-3520.2, Draft IWG-3510, -3520, -3530
Corrective Actions	Options per ASME Section XI, IWB-3142, Draft IWG-3142
Confirmation	Acceptance to ASME Section XI criteria

TABLE 4-6
AGING MANAGEMENT ACTIVITIES AND PROGRAM ATTRIBUTES FOR FATIGUE
(AMP-4.5)

Attribute	Description
Scope	Fatigue effects on fatigue sensitive components
Surveillance Techniques	• Visual examination per ASME Section XI, Subsection IWB, Examination Category B-N-3, and Draft Subsection IWG • Loose parts monitoring • Neutron noise monitoring • Enhanced surveillance per fatigue management program
Frequency	ASME Section XI for visual examination, IWB-2410, -2420, -2430, Draft IWG-2410, -2420, -2430
Acceptance Criteria	Acceptable cumulative usage factor for license renewal term
Corrective Actions	Fatigue management program - see Subsection 4.2.1 and Figure 4-1
Confirmation	Meets ASME Code fatigue requirements

TABLE 4-7
ADDITIONAL ACTIVITIES AND PROGRAM ATTRIBUTES FOR AGING MANAGEMENT OF BAFFLE/FORMER BOLTS (AMP-4.6)

Attribute	Description
Scope	Effects of cracking caused by fatigue, irradiation-induced changes in material properties, and irradiation-induced changes in stresses
Surveillance Techniques	• Visual inspection per Examination Category B-N-3 of ASME Section XI, Subsection IWB and Draft Subsection IWG • Loose parts detection monitoring system • Chemistry RC detection system • Augmented inspections (e.g., ultrasonic inspections)
Frequency	• Monitor with loose parts detection system • Monitor with RC chemistry detection system • ASME Section XI requirements, IWB-2410, -2411, -2412, -2420, -2430 and Draft IWG-2410, -2420, and -2430 • Perform sample baseline inspections prior to LR term with enhanced frequency in accordance with corrective actions
Acceptance Criteria	• Acceptable RC chemistry per technical specifications and • No loose parts from baffle/former bolt assembly and • Fatigue management program in Figure 4-1 and • Number of acceptable bolts and location ≥ he minimum number and location required to maintain core coolability and departure from nucleate boiling ratio (DNBR) within CLB limits, or if needed, for justification of continued operation (JCO), number of acceptable bolts and location ≥ JCO assumptions
Corrective Actions	The following courses of action depend on the bolt condition determined by the monitoring and inspection programs: • Supplemental examinations, analytical justifications or repair/replacement when relevant conditions are detected • Visual inspections, baffle gap measurements, augmented inspections (e.g., ultrasonic inspections), analytical justifications or repair/ replacement when baffle/former bolt assembly loose parts are detected • Fuel inspections, visual baffle plate inspections, baffle gap measurements, augmented inspections (e.g., ultrasonic inspections), analytical justifications or repair/replacement when RC chemistry limits are violated • Adjustment of frequency of inspections and coverage • Analysis (e.g., fracture mechanics techniques, risk-based technology, advanced thermal/hydraulic methodologies) • Bolt replacement of a sample set so the existing bolts with indications may be analyzed (materials testing) and the new bolts monitored • Follow actions prescribed in fatigue management program
Confirmation	Acceptable performance per • Loose parts monitoring and RC chemistry programs • Augmented examinations (e.g., baffle gap inspections, ultrasonic examinations) • Analytical justification

TABLE 4-8
ADDITIONAL ACTIVITIES AND PROGRAM ATTRIBUTES FOR AGING MANAGEMENT OF CORE BARREL/FORMER BOLTS (AMP-4.7)

Attribute	Description
Scope	Effects of cracking caused by fatigue, irradiation-induced changes in material properties, and irradiation-induced changes in stresses
Surveillance Techniques	• Visual inspection per Examination Category B-N-3 of ASME Section XI, Subsection IWB and Draft Subsection IWG • Loose parts detection monitoring system • Augmented inspections
Frequency	• Monitor with loose parts detection system • ASME Section XI requirements, IWB-2410, -2411, -2412, -2420, -2430 and Draft IWG-2410, -2420, and -2430 • Perform sample baseline inspections prior to LR term with enhanced frequency in accordance with corrective actions
Acceptance Criteria	• No loose parts from barrel/former bolt assembly and • Fatigue management program in Figure 4-1 and • Number of acceptable bolts and location ≥ the minimum number and location required to maintain core coolability and DNBR within CLB limits, or, if needed, for JCO, number of acceptable bolts and location ≥ than JCO assumptions.
Corrective Actions	• The following courses of action depend on the bolt condition determined by the monitoring and inspection programs: • Supplemental examinations, analytical justifications or repair/replacement when relevant conditions are detected • Visual inspections, augmented inspections (e.g., ultrasonic inspections), analytical justifications or repair/replacement when barrel/former bolt assembly loose parts are detected • Adjustment of frequency of inspections and coverage • Analysis (e.g., fracture mechanics techniques, risk-based technology, advanced thermal/hydraulic methodologies) • Bolt replacement of a sample set so the existing bolts with indications may be analyzed (materials testing) and the new bolts monitored • Follow actions prescribed in fatigue management program
Confirmation	Acceptable performance per • Loose parts monitoring program • Augmented examinations (e.g., ultrasonic examinations) • Analytical justification

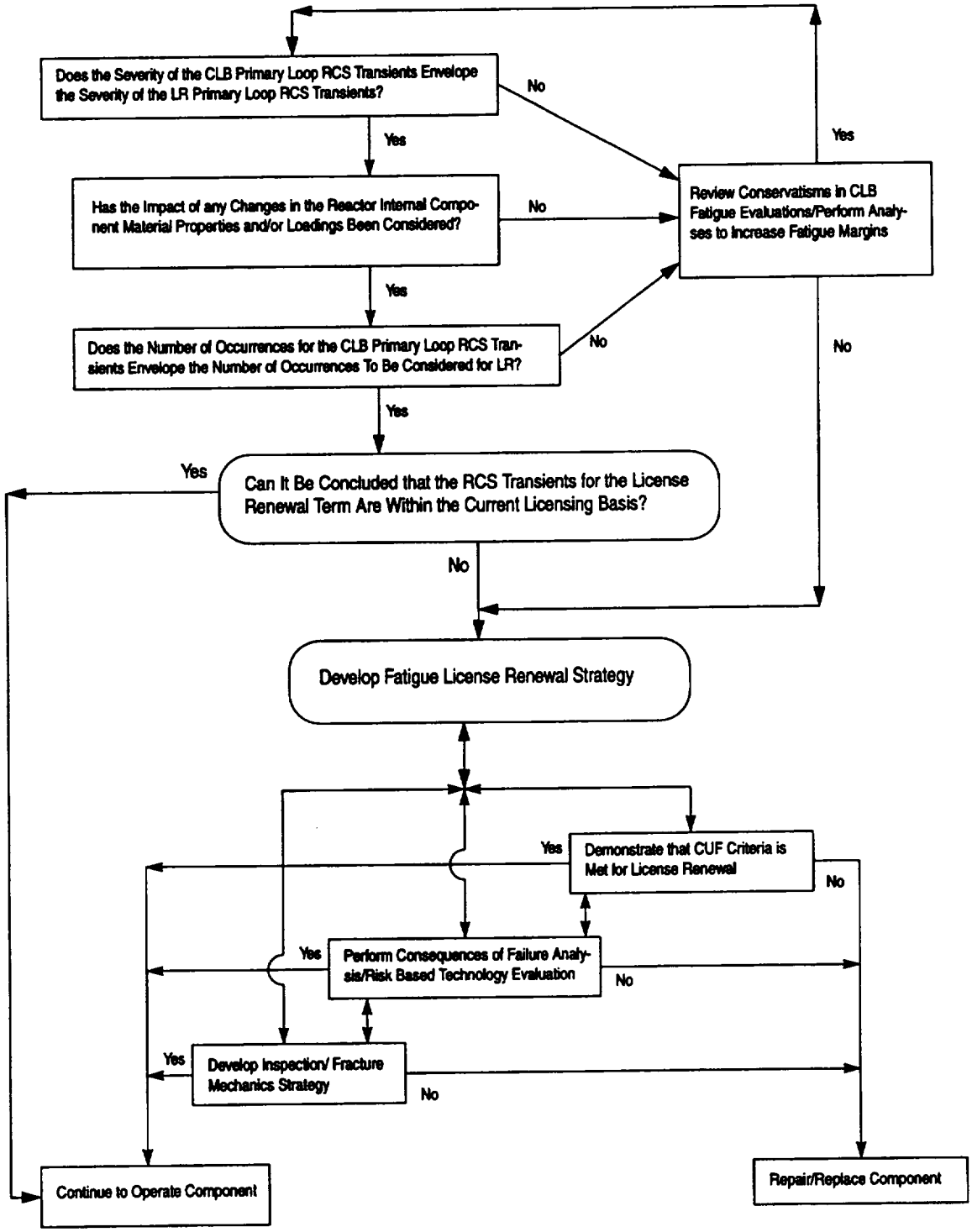

Figure 4-1 Reactor Internals License Renewal Fatigue Evaluation

5.0 SUMMARY AND CONCLUSIONS

The reactor internals assembly has been reviewed for aging management as part of the Westinghouse Owners Group (WOG) Life Cycle Management/License Renewal (LCM/LR) program. The reactor internals are subject to an aging management review because they perform intended functions, perform these intended functions in a passive manner, and are long-lived. This aging management review has identified aging effects and evaluated these effects to determine which require management during an extended period of operation. For those effects that require management, options have been provided.

5.1 SUMMARY

The reactor internals perform the intended functions of:

- Ensuring the capability to shut down the reactor and maintain it in a safe shutdown condition
- Providing (nonsafety-related) intended functions that support the intended functions listed above
- Ensuring the integrity of the reactor coolant pressure boundary (bottom-mounted instrumentation flux thimbles only)

The reactor internals also support system-level intended functions. This is discussed in detail in Section 2.0.

The scope of this generic evaluation is provided in Section 2.0. The scope includes the bottom-mounted instrumentation (BMI) flux thimble whose major functions are to maintain the reactor coolant pressure boundary and provide guidance for the neutron flux detectors.

The effects identified from a review of design limits, time-limited aging analyses (TLAAs), and aging are:

- Fatigue-related cracking for fatigue-sensitive components
- Cracking and material degradation due to corrosion/stress corrosion cracking (SCC)
- Cracking due to irradiation embrittlement/irradiation-assisted SCC (IASCC)
- Thermal aging-related cracking of austenitic stainless steel castings
- Material wastage due to erosion and erosion/corrosion
- Material loss caused by wear of interfacing components
- Loss of bolt preload due to creep/irradiation creep or stress relaxation
- Cracking due to increased loadings caused by swelling/irradiation creep

Effects are evaluated in Section 3.0.

Three effects that were determined to be not significant in the license renewal period are:

- Cracking and material degradation due to corrosion/SCC
- Material wastage due to erosion and erosion/corrosion
- Thermal aging-related cracking of austenitic stainless steel castings

The following effects are managed by current industry practices and will not require additional aging management during the extended period of operation:

- Effects of cracking due to irradiation embrittlement and IASCC for the:
  - a. Core barrel in the core active region
  - b. Baffle plates
  - c. Former plates
  - d. Lower core plate
  - e. Fuel pins in the lower core plate
  - f. Lower support forging (only for those plates with 14-foot cores)
- Stress relaxation effects causing loss of preload, leading to wear and/or loss of preload, which leads to cracking for:
  - a. The upper and lower support column bolts
  - b. Holddown paring
  - c. Clevis insert bolts
- Material loss due to wear

The following effects require additional management during an extended period of operation:

- Baffle/former and barrel/former bolt cracking due to irradiation-induced changes in material properties and irradiation-induced changes in stresses
- Fatigue-related cracking for fatigue-sensitive components

Management programs for these effects are provided in Section 4.0. Cracking of some of the baffle/former bolts has occurred in nondomestic plants.

5.2 CONCLUSIONS

Implementation of aging management options will manage the identified aging effects. Therefore, it is concluded that on incorporation of the above options/activities, reactor internals intended functions will be maintained during the extended period of operation in accordance with the current licensing basis. System-level intended functions supported by the reactor internals will also be maintained.

6.0 REFERENCES

1. U.S. NRC, *Requirements for Renewal of Operating Licenses for Nuclear Power Plants*, 10 CFR 54, Final Rule (June 1995).

2. "PWR Pilot Plant Life Extension Study at Surry Unit 1: Phase 1," EPRI Report NP-5289P (July 1987).

3. "Pressurized Water Reactor Pressure Vessel Internals License Renewal Industry Report," NUMARC Report Number 90-05, Revision 1 (November 1992).

4. Code Case N-201, "Class CS Components in Elevated Temperature Service," Modification of Subsection NG, Section III, of ASME Boiler and Pressure Vessel Code.

5. Draft NRC Branch Technical Position PDLR D-1, "Fatigue Evaluation Procedures" (December 12, 1991).

6. U.S. NRC, "Interim Fatigue Design Curves for Carbon, Low-Alloy, and Austenitic Stainless Steels in LWR Environments," NUREG/CR-5999, Argonne National Laboratories Report, ANL-9313 (March 1993).

7. Letter from W. T. Russell (U.S. NRC) to W. Rasin (NUMARC), "NRC Staff Action Plans Concerning the Issue of Environmental Requalification and Fatigue Analysis of Components" (July 30, 1993).

8. U.S. NRC letter SECY-95-245, "Completion of the Fatigue Action Plan," (September 25, 1995).

9. "Screw Replacements in KWU-Built PWR Cores to Continue," *Nucleonics Week* (March 5, 1987).

10. "Baffle Assembly Screw Damage," INPO Nuclear Network Significant Event Report (November 17, 1989).

11. S. M. Stoller Corporation, *Nuclear Power Experience* (January 1973 to January 1992).

12. U.S. NRC Bulletin 88-09, "Thimble Tube Thinning in Westinghouse Reactors" (1988).

13. "Four Years On, EdF PWRs Again Suffer Pin Cracking," *Nucleonics Week*, p. 3 (March 17, 1988).

14. Koo, W. H. "Threaded Fastener Experience in Nuclear Power Plants," NUREG-0943 (January 1983).

15. Mager, T. R., "Analysis of Failures in Ni-Cr-Fe Alloy X750 Internals in Westinghouse Plants," presented at the Bolt Degradation or Failure in Nuclear Plants Seminar, Knoxville, Tennessee, November 2-4, 1983, Revision 1 (December 1983).

16. Westinghouse Electric Corporation, "Guide Tube Support Pin Update," SAP-89-193 (July 5, 1989).

17. IE Information Notice No. 87-19, "Perforation and Cracking of Rod Cluster Control Assemblies" (April 9, 1987).

18. Garner, F. A., L. R. Greenwood, D. L. Harrod, "Potential High Fluence Response of Pressure Vessel Internals Constructed From Austenitic Stainless Steels," Sixth International Symposium on Environmental Degradation of Materials In Nuclear Power Systems - Water Reactors, San Diego, CA (August 1993).

19. Foster, J. P., D. L. Porter, D. L. Harrod, T. R. Mager, and M. G. Burke, "Observations of 316 SS Cavity Swelling in a PWR," *Journal of Nuclear Materials*, 224, pp. 207-215 (1995).

20. Kangilaski, M., "The Effects of Neutron Radiation on Structural Materials," REIC Report No. 45, Radiation Effects Information Center, Battelle Memorial Institute, Columbus, Ohio (June 1967).

21. Robbins, R. E., J. J. Holmes, and J. E. Irvin, "Post Irradiation Tensile Properties of Annealed and Cold-Worked AISI-304 Stainless Steel," Trans. American Nuclear Society, pp. 488-489 (November 1967).

22. Bloom, E. E., "Mechanical Properties of Materials in Fusion Reactor First-Wall and Blanket Systems," *Journal of Nuclear Materials*, 85 and 86, pp. 795-804 (1979).

23. Stickler, R. and A. Vinckier, "Morphology of Grain Boundary Carbides and its Influence on Intergranular Corrosion of 304 Stainless Steel," Transactions ASM, 54, pp. 362-380 (1961).

24. Andresen, P. L., F. P. Ford, S. M. Murphy, and J. M. Perko, "State of Knowledge of Radiation Effects on Environmental Cracking in Light Water Reactor Core Materials," Proc. of the 4th International Conference on Environmental Degradation of Materials in Nuclear Power Systems - Water Reactors (August 6-10, 1989).

25. Hansen, J. S., "Relative Erosion Resistance of Several Materials," Presented in ASTM-STP-664, pp. 148 - 162 (1979).

26. Clark, D. S., and W. R. Varney, "Physical Metallurgy for Engineers," D. Van Nostrand Company, New York (1962).

27. Foster, J. P. and A. Boltax, "Correlation of Irradiation Creep Data Obtained in Fast and Thermal Neutron Spectra with Displacement Cross Sections," *Journal of Nuclear Materials*, No. 89 (1980).

28. Gilbert E. R., J. L. Straulsund, and G. L. Wire, "Irradiation Creep Data in Support of LMFBR Core Design," *Journal of Nuclear Materials* 65, pp. 266-278 (1977).

29. Chung, P., C. Schwaiger, and H. Ullmaier, "Irradiation Creep in Neutron Bombarded Stainless Steels," *Journal of Nuclear Materials*, 85 and 86, pp. 867-871 (1979).

30. Garzarolli, F., D. Alter, and P. Dewes, "Deformability of Austenitic Stainless Steels and Ni-Base Alloys in the Core of a Boiling and a Pressurized Water Reactor," Proceedings of the Second International Symposium on Environmental Degradation of Materials in Nuclear Power Systems - Water Reactors, Monterey, CA, pp. 131-138 (September 9-12, 1985).

31. Manjoine, M. J., "Stress Relaxation Characteristics of Type 304 Stainless Steel," Conference Publication 13, International Conference on Creep and Fatigue in Elevated Temperature Applications, Philadelphia, PA, September 1973 and Sheffield, U.K., pp. 165.1-165.6 (April 1974).

32. Copeland, J. F. and A. J. Giannuzzi, "Long Term Integrity of Nuclear Power Plant Components," EPRI NP-3673-LD (October 1984).

33. Kass, J. N., "Effect of Neutron Irradiation at 550°F on Reactor Component Materials for BWR/6," NEDO-20243, 74NED2 (January 1974).

34. Causey, A. R., G. J. C. Carpenter, and S. R. MacEwen, "In-Reactor Stress Relaxation of Selected Materials and Alloys at Low Temperatures," *Journal of Nuclear Materials*, 90, pp. 216-223 (1980).

35. Uhlig, H. H., *Corrosion and Corrosion Control*, Wiley and Sons, Inc. (c. 1963).

36. Whitman, G. D., et al., "A Review of Current Practice in Design, Analysis, Materials, Fabrication, Inspection and Test," ORNL-NSIC-21, Oak Ridge National Laboratory, Oak Ridge, Tennessee (December 1967).

37. DePaul, D. J., *Corrosion and Wear Handbook for Water Cooled Reactors*, USAEC Report TID-7006 (1957).

38. "Environmental Effects on Components: Commentary for ASME Section III," EPRI NP-5775, Final Report (April 1988).

39. Yankee Atomic Electric Company to United States Atomic Energy Commission, "Evaluation of Yankee Vessel Cladding Penetrations," License No. DPR-3, Docket No. 50-29 (October 15, 1965).

40. Clarke, W. L., and G. M. Gordon, "Investigation of Stress Corrosion Cracking Susceptibility of Fe-Ni-Cr Alloys in Nuclear Reactor Water Environments," Corrosion-NACE, Vol. 29, No. 1 (January 1973).

41. Kuniya, J., I. Masaoka, and R. Sasaki, "Effect of Cold Work on the Stress Corrosion Cracking of Nonsensitized AISI 304 Stainless Steel in High-Temperature Oxygenated Water," Corrosion-NACE, Vol. 44, No. 1 (January 1988).

42. Hubner, W., B. J. E. Johansson, et al., "Studies of the Tendency of Intergranular Corrosion Cracking of Austenitic Fe-Cr-Ni Alloys in High Purity Water at 300°C," Aktiebolget Atomenergi, ARE-437 (October 1971).

43. Gosselin, S. R., R. D. Doney, and E. A. Siegel, "Thermal Transient and Fatigue Monitoring; A Design Basis Approach," presented at the joint ASME/JSME Pressure Vessels and Piping Conference, Honolulu, Hawaii (July 1989).

44. Massie, H. W. and C. B. Bond, "Fatigue Transient Counts for PWRs: A Study of Five Westinghouse Plants," presented at the U.S. NRC International Aging Symposium (September 1988).

45. Foster, J. P., "Analysis of In-Reactor Stress Relaxation Using Irradiation Creep Models," ASTM STP 611, *Irradiation Effects on the Microstructure and Properties of Metals*, American Society for Testing and Materials, pp. 32-50 (1976).

46. Gilbert, E. R., D. C. Kaulitz, J. J. Holmes, and T. T. Claudson, "Fast Reactor Induced Creep in 20% Cold Worked Type 316 Stainless Steel," *Irradiation Embrittlement and Creep in Fuel Cladding and Core Components*, British Nuclear Energy Society, London, pp. 239-251 (1972).

47. Walters, L. C., G. L. McVay, and G. D. Hudman, "Irradiation-Induced Creep in 316 and 304L Stainless Steel," Proceedings of the International Conference on Radiation Effects in Breeder Reactor Structural Materials, The Metallurgical Society of AIME, Scottsdale (June 19-23, 1977).

48. SECY-93-049, "Implementation of 10 CFR Part 54, 'Requirements for Renewal of Operating Licenses for Nuclear Power Plants,'" March 1, 1993.

49. Staff Requirements Memorandum from Samuel J. Chilk, dated June 28, 1993.

50. NUREG-0933, "A Prioritization of Generic Safety Issues," Supplement 20, July 1996.

51. Letter from William T. Russell of NRC to William Rasin of the Nuclear Management and Resources Council, dated July 30, 1993.

52. SECY-94-191, "Fatigue Design of Metal Components," July 26, 1994.

53. SECY-95-245, "Completion of The Fatigue Action Plan," September 25, 1995.

54. NUREG/CR-6260, "Application of NUREG/CR-5999 Interim Fatigue Curves to Selected Nuclear Power Plant Components," March 1995.

55. Letter from Ashok C. Thadani of the Office of Nuclear Regulatory Research to William D. Travers, Executive Director of Operations, dated December 26, 1999.

56. NUREG/CR-6674, "Fatigue Analysis of Components for 60-Year Plant Life," June 2000.

57. U.S. NRC Information Notice 98-11, "Cracking of Reactor Vessel Internal Baffle Former Bolts in Foreign Plants," March 25, 1998.

7.0 USE AND APPLICATION OF A GENERIC TECHNICAL REPORT IN A LICENSE RENEWAL APPLICATION

This section describes the process for using generic technical reports (GTRs) in support of the preparation of a license renewal (LR) application. The process, illustrated in Figure 7-1, is based on the Nuclear Energy Institute (NEI) 95-10, *Industry Guideline for Implementing the Requirements of 10 CFR Part 54 - The License Renewal Rule*, Revision 0. NEI 95-10 also provides information on the license renewal application content. This section does not discuss the content of an application.

Although a utility can perform an aging management review (AMR) that is plant-specific, using generically approved AMRs (e.g., aging management guidelines [AMGs], industry reports [IRs], and GTRs) can significantly reduce the efforts of the licensee and NRC in the preparation and approval of a renewed license. To achieve the most benefit of a GTR, it should be reviewed to identify how much of the plant-specific structure or component (SC) is bounded by the GTR, and which generic evaluations apply to the SC for that plant. This review would limit additional plant-specific AMRs to only those SCs at the plant that are not bounded by the GTR, or have not been evaluated generically.

The primary elements of using a generic AMR as a license renewal application reference are to identify those AMRs that apply and demonstrate how the generically approved AMR is applicable to the plant, as well as demonstrate that the aging effects will be managed.

Generic AMRs that are not approved by the NRC may also be used during the preparation of a LR application. However, this information will require NRC approval during approval of the LR application. Essentially, using GTRs that have not been pre-approved requires including additional information from the GTR in the plant-specific documentation supporting a LR application. This information includes assumptions (Section 2.0), evaluations and conclusions (Section 3.0), and the aging management programs and demonstration that these programs will manage aging (Section 4.0). The remainder of this section describes how to use pre-approved GTRs.

7.1 IDENTIFY AND DEMONSTRATE APPLICABILITY

7.1.1 Step 1 – Determine if the Generic Technical Report Has Been Reviewed and Approved by the U.S. NRC

The first step in using a GTR in a license renewal application (see Figure 7-1) is to identify the GTR to be referenced. A list of reports that are used by applicant utilities for license renewal, some of which may be found in the Public Document Room at the NRC, is in Exhibit A of the license renewal application, Section 1-1, "Scope." This section of Exhibit A will identify which reports filed by utilities that have or have not been approved by the NRC.

7.1.2 Step 2 – Identify and Compare the Generic Technical Report Characteristics to Applicable Plant Characteristics

Step 2 will demonstrate how a GTR is applicable to the plant that is applying for a renewed license. This can be accomplished by completing four activities.

- Identify those characteristics that affect the conclusions of the GTR, such as:
  - Scope
  - Assumptions
  - Limitations
  - Configuration
  - Functions
  - Engineering and design parameters
  - Protective measures
  - Materials
  - Fabrication
  - Service conditions
- Compare the approved characteristics in the GTR to plant-specific characteristics.
- Identify plant characteristics that are bounded by approved characteristics in the GTR.
- Identify plant characteristics that are not bounded by approved characteristics in the GTR.

Comparing the approved characteristics to the plant-specific characteristics helps determine which plant characteristics are equivalent to, or bounded by the GTR. Those plant characteristics that are not equivalent or bounded by the GTR should be identified and evaluated in the plant-specific license renewal application documentation. One example of a characteristic not bounded by the GTR is plant-specific pre-service or service-induced flaws. It is the responsibility of the plant to determine if any pre-service or service-induced flaws at their plant have occurred and are related to aging. If a flaw is determined to be age-related, the related aging effect should be evaluated per the requirements of the LR Rule. If the evaluation determines the aging effect will degrade an intended function, an appropriate aging management program should be described and justified. This comparison would be documented in Section 2.2 and 2.3, "SC Selection Process" and "Scoping Results," of Exhibit A of a license renewal application.

7.2 DEMONSTRATE THAT AGING EFFECTS WILL BE MANAGED

THE FOLLOWING ACTIVITIES ARE DESCRIBED IN MORE DETAIL IN SUBSECTION 7.2.1

This demonstration requires six activities:

- Compare the approved time-limited aging analyses (TLAAs) in the generic AMRs with those identified from a review of the current licensing basis (CLB) in effect at the plant.
- Verify that plant TLAA characteristics are bounded by the generic AMRs.
- Compare the list of approved aging effects in the generic AMRs with those from a review of commitments that have changed the original CLB, and are based on the effects of aging, such as:
  - Responses to NRC communications: bulletins, generic letters, or enforcement actions
  - License event reports (LERs) and safety evaluation reports (SERs)
  - Safety analysis report (SAR) amendments and technical specification changes

THE FOLLOWING ACTIVITIES ARE DESCRIBED IN MORE DETAIL IN SUBSECTIONS 7.2.2 AND 7.2.3

- Compare approved program features in the AMRs with similar plant program features.
- Identify similar program features.
- Identify program features that are different from those approved in the generic AMRs.

7.2.1 Step 3 – Review Aging Effects Based on Plant Operating and Maintenance History

Compare TLAAs and aging effects from a GTR with those from a review of CLB changes in effect at a plant.

The TLAA comparison identifies:

- TLAAs that are applicable to the plant
- TLAAs that are not applicable to the plant
- Additional plant-specific TLAAs

The above three categories of TLAAs should be identified in Section 1.3, "TLAA Evaluation," in Exhibit A of the license renewal application. For TLAAs that are not applicable to the plant, a justification should be provided explaining why that TLAA does not apply. Additional plant-

specific TLAAs that are identified require an evaluation (10 CFR 54.21 [c][1][i - iii]) and aging effect evaluation, as necessary.

The aging effect comparison identifies:

- Aging effects that are applicable to the plant
- Aging effects that are not applicable to the plant
- Additional plant-specific aging effects

Exhibit A of the license renewal application, Section 3.2, "Aging Management Review Process," should identify these three categories of aging effects. As with the TLAAs discussed above, a justification should be provided for those aging effects that are not applicable to the plant. Additional plant-specific aging effects that are identified will require an evaluation and aging management program, as necessary, in the plant-specific license renewal application.

7.2.2 Step 4 – Compare Referenced (GTR) Program Attributes with Existing Plant Activities

The comparison of program features from generic AMRs with plant programs identifies equivalent program features and those plant program features that are different. This comparison should be documented in Exhibit A of the license renewal application, Section 3.2, "Aging Management Review Process." For plant programs that differ from approved program features in generic AMRs, two options are available:

- Provide a justification explaining why the plant program is adequate for managing the aging effect, or

- Describe an enhancement to a plant program or a new plant program that is consistent with the program features approved in the GTR (refer to Subsection 7.2.3 for further guidance).

7.2.3 Step 5 – Identify Enhancements or New Programs

A description of a new program or program enhancement should include a demonstration of the enhanced or additional features. This demonstration should explain how the program features manage the aging effect to maintain an intended function consistent with the CLB, and why these features will be adequate for an extended period of operation, similar to the demonstration required for existing plant programs.

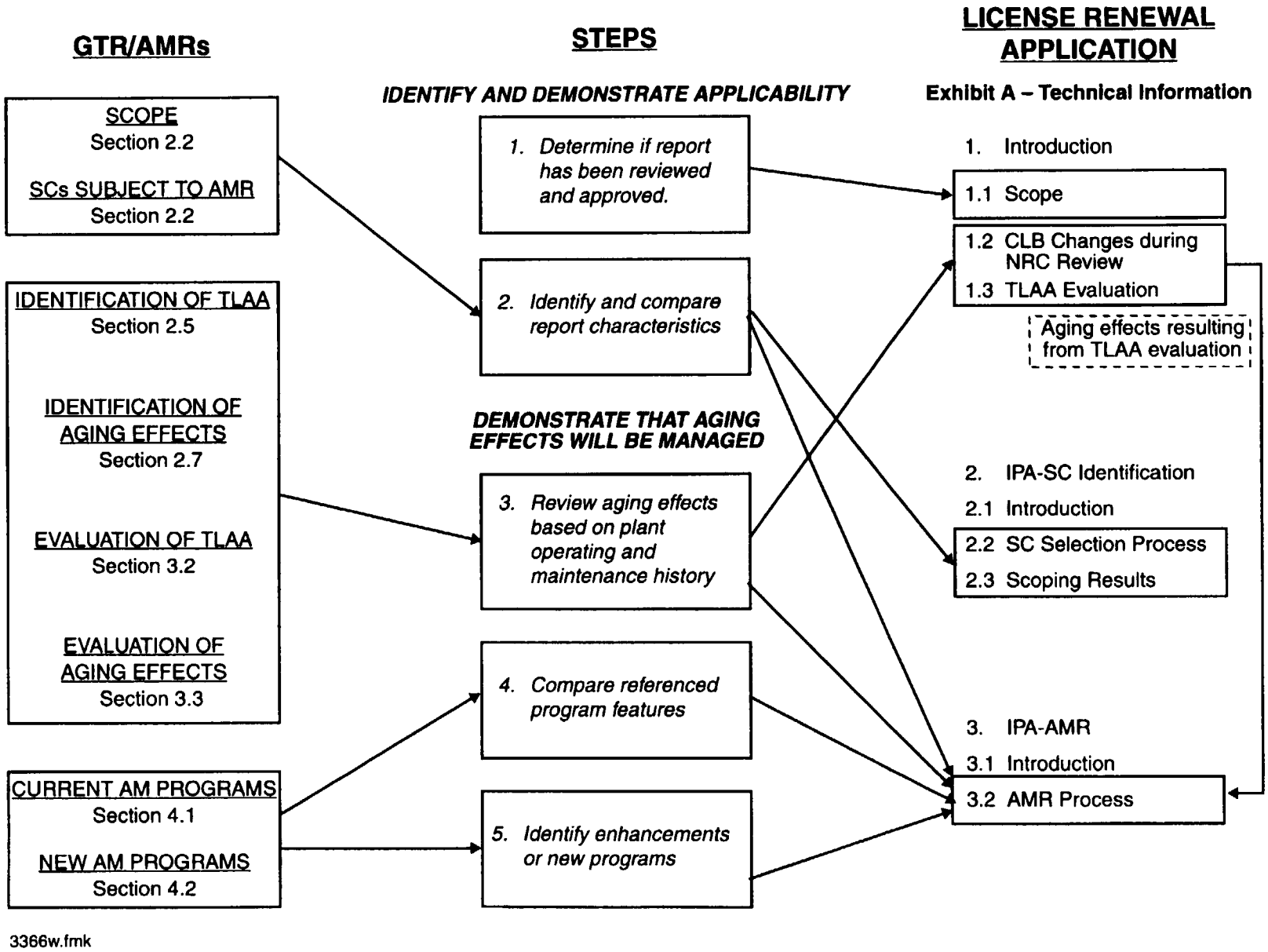

Figure 7-1 How to Use a GTR in a License Renewal Application

8.0 ATTACHMENT 1, RAI RESPONSES

OG-99-096 NRC Project Number 686

November 24, 1999

To: Document Control Desk
U.S. Nuclear Regulatory Commission
Washington, DC 20555-0001

Attention: R.K. Anand, Project Manager
License Renewal and Standardization Branch
Division of Regulatory Improvement Programs
Office of Nuclear Reactor Regulation

Subject: Westinghouse Owners Group

Response to NRC Request for Additional Information on WOG Generic Technical Reports: WCAP-14577, "License Renewal Evaluation: Aging Management For Reactor Vessel Internals" (MUHP6110)

Reference: Request For Additional Information (Received from NRC, NRR - June 14, 1999)

Attached are the Westinghouse Owners Group responses to the NRC's Request for Additional Information on WOG Generic Technical Report WCAP-14577, "License Renewal Evaluation: Aging Management For Reactor Vessel Internals." Please distribute these responses to the appropriate people in your organization for their review.

If you have any questions regarding these responses, please contact Charlie Meyer, Westinghouse, at (412) 374-5027, or myself at Wisconsin Electric Power Company, (414) 221-2002.

Very truly yours,

Signed Original on File in WOG Project Office

Roger A. Newton, Chairman
LCM/LR Working Group
Westinghouse Owners Group

cc: R.K. Anand, Project Manager, USNRC License Renewal and Standardization Branch, (1L, 1A)
C.I. Grimes, Director, USNRC License Renewal and Standardization Branch (1L, 1A)
WOG LCM/LR Working Group (1L, 1A)
WOG Steering Committee (1L, 1A)
A.P. Drake, W (1L, 1A)

OG-99-096
November 24, 1999

bcc:

C.E. Meyer, W	ECE 4-07 (1L, 1A)
D.R. Forsyth, W	5-03 (1L, 1A)
G.V. Rao, W	5-03 (1L, 1A)
S.A. Binger	ECE 5-16 (1L, 1A)
P.V. Pyle	ECE 5-16 (1L, 1A)
K.J. Vavrek	ECE 5-16 (1L)
S.R. Bemis	ECE 5-16 (1L, 1A)

RESPONSES TO REQUESTS FOR ADDITIONAL INFORMATION ON

WCAP-14577, "LICENSE RENEWAL EVALUATION: AGING MANAGEMENT FOR REACTOR VESSEL INTERNALS"

RAI #1 INDUSTRY PLANS

Since the submission of the topical report, the industry has consolidated efforts by the various owner's and other groups, e.g., the PWR Materials Reliability Project (MRP). What is the scope and nature of industry efforts addressing aging management issues related to RVI? What are the schedules for these activities, and how will the results of these industry efforts affect the conclusions and plans addressed in the topical report?

RESPONSE

The major part of the industry effort is the PWR Materials Reliability Project. The overview, mission and objectives of the MRP are:

II. Overview

The purpose of the PWR Materials Reliability Project is to provide a utility-directed oversight structure to proactively address and resolve, on a consistent industry-wide basis, existing and emerging PWR material-related issues. The focus will be on issue resolution and closure and there will be close coordination with and direct participation by the major US NSSS vendors, their associated Owners Groups, NEI and INPO.

III. Mission

The mission of the PWR MRP is to implement and maintain an industry wide program focused on resolving selected existing and emerging performance, safety, reliability, operational and regulatory PWR materials issues. The Executive Group of the PWR MRP will serve as the industry focal point for resolution of issues related to PWR materials degradation management.

IV. Objectives

The objectives of the PWR MRP is to provide a utility-directed oversight structure to proactively address and resolve, on a consistent industry-wide basis, selected PWR materials issues. The specific objectives are to:

- Resolve existing and emerging performance, safety, reliability, operational, and regulatory PWR materials issues that meet specific screening criteria,
- With the direct involvement of NEI, serve as the focal point for industry-wide PWR materials-related regulatory issues,

- Fully integrate any work undertaken with OG activities and, where appropriate, ASME Code activities.

The reactor pressure vessel internals is an issue within the MRP and an issues technical group (ITG) has been formed to address this issue. The intent of this group is to ensure 60+ years of safe and reliable plant operation with no surprises or forced shutdowns due to degradation of reactor internals. The ongoing EPRI Joint Baffle Bolt (JoBB) Program, established in 1996, has been incorporated into the ITG to provide plant inspection and research test data.

Within the WOG and the ITG programs on reactor internals some of the projects under consideration are:

a. Hot Cell Material Testing of Baffle/Former Bolts Removed from Two Lead Plants

b. Hot Cell Material Testing of Baffle/Former Bolts Removed from Ginna

c. Determination of Bolt Operating Parameters of Extracted Bolts

d. Characterization of European and US Baffle/Former Bolt Manufacture, Operation, and Performance

e. Evaluation of the Effects of Irradiation on the IASCC and Mechanical Properties of Core Shroud Materials (SA 316, SA 304, CW 304, and 308 welds)

f. Determination of the Occurrence and the Magnitude of Irradiation Induced Swelling of the Core Shroud

g. Irradiation Embrittlement of Reactor Vessel Internals in PWR's

h. Development of Enhanced Visual Inspection Requirements for Core Internal's Materials Subject to Aging Degradation

i. Preparation of a white paper summarizing available void swelling data and determining the effect on reactor vessel internals components

j. Additional Projects to be added, pending funding

The hot cell testing, item A, is in progress using baffle bolt and locking device materials from two US domestic plants. Additional testing on these materials and on material from a third plant, item B, is being performed separately by the Westinghouse Owners Group as part of the overall industry initiative. This overall program on US materials is currently scheduled to be completed during 2000 and 2001.

MODIFICATIONS TO THE TOPICAL REPORT

The final part of the RAI asks "how will the results of these industry efforts affect the conclusions and plans addressed in the topical report?"

Because this question is similar to the question in RAI #2, the proposed changes in the topical report are addressed in the response to RAI #2.

RAI #2 TECHNICAL PROGRESS

Since almost two years have elapsed from the date that the topical report was submitted, what changes would be made to the report considering technical progress during that time, with particular emphasis on the report sections addressing aging effects and aging management programs (AMP)?

RESPONSE

Since the topical report has been submitted there have been significant amounts of new information generated. The inspection and partial replacement of baffle bolts at four US plants coupled with the testing of bolts removed from three of these plants has provided extensive and important information.

The inspections at the Farley Units 1 and 2 plants revealed no indications in any of the strain hardened Type 316SS baffle bolts. Approximately 200 removed bolts from Farley Unit 1 were subsequently tensile tested. No testing was done on Farley Unit 2 bolts. No indication of pre-existing defects were found on any of the Farley Unit 1 bolts. This conclusion is based on the stress strain curves and on enhanced visual inspection of the bolts after testing. The enhanced visual system consisted of a TV system capable of seeing a 0.002 inch wire. The tensile testing of the bolts was, in effect, a functional test of the bolts' load-bearing capabilities. The data demonstrated the expected increase in yield strength of the bolts with an unexpectedly large elongation to fracture. As an example, yield strengths of >130ksi were measured with >25% elongation to fracture. This demonstrates that there is more than adequate ductility and that the bolts do not behave in a brittle manner.

The bolting material at the Point Beach plant is 347 SS. Nine bolts were found to be non-functional. The bolts at this plant have a significantly greater fluence than those at the Bugey plant when cracks were first observed. Subsequent fluorescent dye testing of the bolts with indications sent to the hot cells did not reveal any cracking, suggesting that the inspection criteria used resulted in a large number of false positives. Tensile testing of the removed bolts resulted in the similar tensile data information as described above for Farley, namely, that the bolts showed the expected increase in yield strength but with greater than expected ductility.

At the Ginna plant the findings were similar to those at Point Beach with a total of five non-functional bolts found. Fourteen of the bolts removed from Ginna were sent to the hot cells for material testing. Detailed microstructural and material property evaluations are currently being performed on the bolts and the 304 SS locking devices from the three plants.

Examination of a 347 SS bolt from a European plant with extensive exposure has shown voids in a small volume of the bolt where the gamma heating and fluence are optimum for the production of voids. A calculation of the degree of swelling showed approximately 0.2% increase in volume in this region. The bolts removed from the US plants will be similarly investigated. This will be considered and discussed further in the response to RAI #8.

MODIFICATIONS TO THE TOPICAL REPORT

The following subsections will be revised due to the industry efforts described above in the responses to RAI's #1 and #2. Although the RAI responses focus on baffle / former bolts, substantial replacement of guide tube split pins has taken place since the report was issued.

2.6.2 Fasteners - Threaded and Pinned

(no change except last paragraph modified as follows)

Specific inspections of baffle / former bolts at several domestic WOG plants has indicated a small degree of degradation (<1.2%). Several of these bolts were removed for subsequent hot cell testing. In addition, a PWR Materials Reliability Project has been implemented by the industry, with a specific Issue Technical Group (ITG) to address reactor vessel internals issues. The ITG and the WOG have implemented a series of tasks including the hot cell testing and characterization of the irradiated bolts removed from the WOG plants.

As new information becomes available from the MRP and WOG tasks, it will be factored into plant specific license renewal applications. This report provides a bounding set of aging mechanisms and effects and the on-going programs are not expected to identify any new issues.

2.6.7 Guide Tubes

2.6.7.1 Guide Tube Assembly

(no change)

2.6.7.2 Guide Tube Support Pins

(no change except last paragraph modified as follows)

Evaluations were subsequently performed by the WOG to investigate indications of degradation that were found on four foreign plants and one domestic plant that has Rev. A pin material. Currently, support pins at a number of WOG plants are being replaced. As noted above, pin degradation does not lead to a loss of intended function. Generally, pin replacement is considered to be a sound maintenance practice to preclude degradation when industry experience indicates that such degradation has been observed.

Changes to other sections of the WCAP regarding separate issues included in these RAI's (e.g., fatigue, thermal embrittlement, swelling, irradiation-assisted stress corrosion cracking, and aging management programs) will be described as part of the responses to those RAI's.

RAI #3 BAFFLE-FORMER BOLTS

In Sections 3.0 and 4.0 of the subject report, WOG, in part, addresses aging management review, aging effects evaluation, and proposed generic aging effects management activities and programs with regard to aging-related degradation of baffle bolts. Subsequent to the submittal of the subject report, WOG had periodic meetings and interactions with the staff from 1997 to the present regarding its ongoing programs and activities to resolve the baffle bolt cracking issues. The ongoing programs and activities include: (1) development and approval of a prescribed analytical methodology for evaluating the acceptability of baffle bolting distributions under faulted conditions; (2) assessment of the safety significance of potentially degraded baffle bolting; (3) performance of baffle bolting inspections/replacements and testing on lead plants; and (4) development of an inspection monitoring and aging management program.

The staff requests that WOG describe their plans and schedules for including the results of the above programs and activities in the aging management of baffle-former bolts.

Because this question is related to the topic of RAI #4, the response is provided together with that for RAI #4 below.

RAI #4 BAFFLE-FORMER BOLTS

In Section 4.2.2 of WCAP-14577, WOG describes the AMP for baffle-former bolts (AMP-4.6), which recommends continued use of the present surveillance techniques. The present surveillance techniques include: (1) visual (VT-3) examination; (2) loose parts detection monitoring; and (3) reactor coolant chemistry monitoring. AMP-4.6 provides options for correcting relevant conditions detected by the VT-3 examination. Further, WOG indicates that baffle-former bolt cracking has not been observed in Westinghouse domestic plants. However, baffle-former bolt cracking has been observed in French and Belgian plants and more recently in Westinghouse domestic plants using volumetric (UT) examination techniques.

Based on the recent experience of volumetric inspection of baffle-former bolts at Ginna and Point Beach Unit 2, the staff requests that WOG propose an alternative program. In lieu of the proposed VT-3 examination, the WOG should consider volumetric inspection.

RESPONSE

Reference [1] provided the safety evaluation (SER) report prepared by the NRC staff to address the acceptability of the Westinghouse methodology to determine number and distribution of intact and functional baffle bolts required to ensure safe plant operation. Application of this approved methodology to determine the number and distribution of required functional and intact bolts has been performed for both plant specific applications as well as for generic plant groups which have similar reactor internals designs. This grouping of plants with similar design features was utilized in order to reduce the number of required evaluations to cover the complete Westinghouse fleet. Plant specific applications of the Westinghouse methodology were performed in support of the inspection and replacement programs at Farley Units 1 and 2 and Point Beach Unit 2. These plant specific applications demonstrated that safe plant operation could be maintained with a reduced number of functional and intact baffle-former-barrel bolts. The results of the generic evaluations completed to date have also shown that in

many cases only a small number of intact and functional baffle-former-barrel bolts are required to ensure safe plant operation.

The inspection at Point Beach Unit 2 was done using an angle beam transducer placed on the side of the internal hex socket. Comparing the results of the UT inspections and the mechanical (pull) testing has shown that the inspection techniques of these 347 stainless steel bolts resulted in a large number of false positive indications. However, nine bolts were determined to be non-functional based on observed (full or partial) cracking through the shank. In addition, the final review of the bolt mechanical test data identified two bolts that had full strength capability but had less total elongation and reduction in area than similar bolts. Visual examination of the fracture surface revealed a small in-service crack (~2%) on one bolt but could not confirm a likely similar small crack on the other bolt due to videotape limitations. Both of these bolts were considered to be functional but were judged to have very small in-service cracks on the shank surface at the bolt fillet.

The bolts at Farley Units 1 and 2 have a different head configuration than those at Point Beach Unit 2 and are fabricated of Type 316 CW stainless steel. The bolts inspected at Farley Units 1and 2 did not have any indications. This result was supported by the mechanical (pull) testing performed on the removed bolts. The bolt replacement approach at Point Beach Unit 2 and Farley Units 1 and 2 was to replace the bolts in a number and pattern that would provide acceptable safe plant operation using the replacement bolts alone with no credit taken for the remaining original bolts. As a result, for these plants (Point Beach Unit 2 and Farley Units 1 and 2), no further bolt inspections are planned at his time during the initial operating license periods. If these plants pursue license renewal, then further actions may be considered at that time.

Information on crack initiation rates is provided by the periodic European plant inspection data and the recent data provided by the inspection, testing and replacement at three U.S. plants. The data from the U.S. plants indicate that the cracking is significantly less than that experienced in France. For the plants that have experienced cracking in France, the cracking rate in the more resistant plants is of the order of 2 bolts per cycle. Analysis has demonstrated that between 32% and 80% (depending on the plant design) of the bolts in a plant, randomly distributed, can be cracked with no effect on safety. Thus, if the number of cracked bolts is low, based either on hours of operation or fluence, in comparison to the already inspected plants, then the rate of crack initiation could be sufficiently low that many years of continued operation could be justified without the need for further inspection.

In summary, the Westinghouse Owners Group concurs that degradation of the baffle former bolting is an aging management issue. The results of the recent inspections at Point Beach Unit 2, have shown that through approximately 182,000 hours of operation only a small number of 347 SS bolts have become nonfunctional. The inspection results at Farley Unit 1 have shown that through 144,000 hours of operation none of the 316 CW SS bolts had lost any functionality. The following table summarizes the results of bolt testing.

Plant	Number of Effective Full Power Hours (K)	Non-Functional Bolts (% of Bolts Verified to be Non-functional)
Farley Unit 1	144	0 (0.0%)
Point Beach Unit 2	182	9 (1.2%)
Ginna	195	5 (0.8%)

As a result of the inspections and replacements for Point Beach Unit 2 and Farley Units 1and 2, no further bolt inspections are planned at his time for any other WOG plants during the initial operating license periods. For those WOG plants considering license renewal, further actions will be developed as part of an overall industry program.

The topical report already includes an extensive discussion on different surveillance techniques (Section 4.2.2) including ultrasonic testing. The two Aging Management Programs provided for baffle/former and barrel/former bolts (AMP-4.6 and AMP-4.7) already include the option of "augmented inspections. A single paragraph will be added to the end of Section 4.2.2 as described below.

MODIFICATIONS TO THE TOPICAL REPORT

Section 4.2.2 in WCAP-14577 contains the "Aging Management Program for Baffle/Former and Barrel/Former Bolts (AMP-4.6 and AMP-4.7)."

4.2.2 Aging Management Program for Baffle/Former and Barrel/Former Bolts (AMP-4.6 and AMP-4.7)

(no change except the last paragraph is expanded as follows)

Based on the aging effects identified and current industry initiatives, it is recognized that enhanced inspections beyond present Section XI requirements may be required to manage the effects of aging on Baffle/Former and Barrel/Former bolts for extended periods of operation. Tables 4-7 and 4-8 provide a general path to manage the aging effects on the Baffle/Former and Barrel/Former bolts during the license renewal period. The details of these enhanced inspections will be provided in the aging management programs described in plant specific license renewal applications based on the best information available at that time from the industry programs.

RAI #5 FATIGUE - TIME-LIMITED AGING ANALYSIS

In Section 1.0 of WCAP-14577, WOG indicates that one objective of the report is to identify and evaluate time-limited aging analyses (TLAA). In Section 2.5 of the report, WOG identifies fatigue as the only TLAA related to the RVI, and that the results from current TLAAs have been projected to an extended period of operation. In Section 3.0, WOG provides a summary list (Table 3-3) of fatigue-sensitive RVI components that could reach the fatigue usage limit within a 40- to 60-year time period. WOG indicates that the listed components were identified based on a review of calculated fatigue usage factors for internals components designed to American Society of Mechanical Engineers (ASME) Section III, Subsection NG, hot functional test data, and a comparison of geometric and operating similarities.

The staff requests WOG to provide a list of the TLAAs and a brief summary description of each of the listed analyses used to identify the fatigue-sensitive reactor vessel components. The staff requests WOG to clarify whether the fatigue-sensitive components listed in Table 3-3 apply to all Westinghouse-designed RVI or only to those designed to ASME B&PV Code, Section III, Subsection NG as described in Section 2.5.1 of the report.

For RVI designed prior to the ASME Code adoption of Subsection NG in Section III, what requirements were used for fatigue analysis of the RVI components for the initial operating period? How were these analyses updated to account for the license renewal period?

RESPONSE

The only TLAA for the reactor internal components is fatigue. The fatigue sensitive determination for those reactor internal components described in Table 3-3 applies to the complete Westinghouse fleet. The criteria utilized by Westinghouse for pre-1974 plants was developed internally within Westinghouse and is similar to the subsection NG requirements since many of the Westinghouse designers were members of the ASME code committee that developed the NG subsection. At the present time, fatigue calculations have not been performed and/or have not been updated by Westinghouse to reflect operation in the license renewal period as presented in Figure 4-1 of the WCAP 14577.

The license renewal application will follow the flowchart in Figure 4-1 of WCAP-14577 to assess the acceptability of the RVI components relative to fatigue for the extended period of operation.

The preferred approach, shown in the first part of Figure 4-1, is to demonstrate that the fatigue effects anticipated for the license renewal term are bounded by the fatigue effects anticipated for the original service period. This includes an assessment of the number and severity of the RCS design transients anticipated during the extended period of operation relative to those assumed to occur in the Current Licensing Basis (CLB), and an assessment of the impact of changes to the reactor internals component material properties that may have occurred during the current licensing period.

MODIFICATIONS TO THE TOPICAL REPORT

In WCAP-14577, Section 2.5.2 describes "Industry and Regulatory Actions on Fatigue." This section will be modified to note that GSI-166, "Adequacy of Fatigue life of Metal Components," has been closed and that a separate item, GSI-190, "Fatigue Evaluation of Metal Components for 60-Year Plant Life," has been opened to carry forward the issue of metal fatigue during an extended period of operation.

Under Section 4.2, "Additional Activities and Program Attributes, Section 4.2.1, "Aging Management Program for Fatigue (AMP-4.5) includes an extensive discussion on the conservatisms included in the current analyses methods. These discussions will be moved to Section 3.2.10 "Time-Limited Aging Analysis (Fatigue) Evaluation to better reflect the current thinking relative to evaluating the TLAA. Revised Section 3.2.10 and 4.2.1 are modified to read as follows:

3.2.10 Time-Limited Aging Analyses (Fatigue) Evaluation

Section 2.5 identifies fatigue as the only TLAA related to the reactor internals. This section provides the overall approach that licensees will take in addressing the fatigue TLAA for the reactor vessel internals. If the TLAA cannot be dispositioned analytically, options are presented in Section 4.0 to manage the identified aging effects.

3.2.10.1 Mechanism Description

(No change)

3.2.10.2 Aging Effect Evaluation

American Society of Mechanical Engineers (ASME) Code Section III fatigue design procedures use a design fatigue curve that is a plot of alternating stress range (S_a) versus the number of cycles to failure (N). The design fatigue curve is based on the unnotched fatigue properties of the material, modified by reduction factors that account for various geometric and moderate environmental effects.

The fatigue usage factor (U) is defined by Miner's rule as the summation of the damage over the total number of design basis transient types (X), as given by the ratio of expected cycles of that type (n_i) to the allowable number of cycles (N_i) for the stress ranges associated with that transient:

For ASME Code design acceptance, the cumulative usage factor (CUF) calculated in this manner cannot exceed unity (1.0) for the design lifetime of the component.

A recommended flowchart that provides guidance for the management of fatigue in the license renewal period is shown in Figure 4-1. Note that Figure 4-1 addresses the potential effects of the water reactor environment on fatigue through the determination of material property changes. The CLB for fatigue can be maintained in the license renewal period if it can be

demonstrated that the nature and frequency of the license renewal period reactor coolant system (RCS) transients are bounded by those assumed in the CLB and that there has been no significant change in reactor internals components' material properties including environmental effects from those assumed in the CLB. However, if this is not possible, then an aging management program for fatigue for each component should be established.

Note that in Figure 4-1 some paths are reversible, that is, decisions can be reversed when another strategy selected, thus allowing a greater flexibility to include new or more complete information (e.g., test data, regulatory acceptability).

The purpose of the component fatigue evaluations is to verify that the component has a cumulative fatigue factor of less than 1.0. It is important to note that, depending on the plant specific application, there are usually several conservatisms included in these fatigue usage calculations. After a determination is made that the number and severity of the RCS transients for the license renewal term are not within the current design basis, then these conservatisms should be evaluated and/or analyzed to increase the present fatigue usage margins. In general, these conservatisms can be found in:

- Definition of RCS design transients
- Enveloping of design loadings
- Calculational methodologies

These conservatisms are discussed in the next subsections.

3.2.10.3 Conservatisms in the Design Transients

The conservatisms built into the RCS primary-side design transients consist of:

- RCS transients that are typically more severe than those experienced during service.
- RCS transients with a larger number of expected occurrences than could reasonably occur during the plant lifetime. For example, the unit loading and unloading between 15 and 100 percent transient has 13,200 to 18,600 postulated design cycles, depending on the plant. This means that a plant will be cycled through these loading and unloading cycles once every day for 40 years, which is unrealistic.

One way to address excess conservatisms in design transients is transient monitoring and cycle counting. It is important to also note that, in general, plants designed in the 1960s and 1970s have fewer RCS design transients defined than those plants designed in the 1980s. Transients that have occurred during operation or are postulated to occur in the licensee renewal term and are not bounded by the CLB transients require re-evaluation on a case-by-case basis.

3.2.10.4 Conservatisms in the Analysis

One of the conservatisms built into the analytical approach consists of performing bounding or enveloping analyses based on bounding RCS design transients and/or loadings. If it can be shown that the calculated design fatigue usage was less than 1.0 by performing a simplified

bounding analysis, it is not always necessary to perform additional analysis to show that the fatigue analysis requirements can be met by a larger margin.

In addition, there are two sources of conservatisms inherent in the ASME code fatigue methodology. First, the design fatigue curves contain a factor of 2 on stress range and a factor of 20 on the number of cycles to failure. Second, a substantial margin exists because of conservatisms in the magnitude and frequency of occurrence assumed for the various design basis transients [Refs. 2, 43, and 44].

An additional source of conservatism with respect to high-cycle fatigue for internals components in operating plants is derived on the basis of the fatigue curves for typical internals materials. The stress range for cycle to failure beyond 10^6 cycles is approaching the endurance limit of the material. Typical PWR internals vibration frequencies are in the range of 5 to 10 Hz, so that an operating plant accumulates 10^9 to 10^{10} fatigue cycles in less than 32 full power years. In practical terms, this means that in the absence of changes in loading or configuration, internals components that have not experienced high-cycle fatigue damage during the original licensing period are unlikely to experience high-cycle fatigue damage during the license renewal term.

Conservative calculations use bounding design transients and subsequent design basis stresses to estimate low-cycle fatigue accumulation for the specified transients. High-cycle fatigue analysis is proof-tested by hot functional tests. The rationale for the latter is that a component with high-cycle fatigue susceptibility is identified during hot functional testing, which induces higher flow loads without the resistance of the fuel assemblies. Any high-cycle fatigue issues that have been identified by hot functional testing have either required subsequent design or operational modifications or analyses to demonstrate the acceptability of the observed behavior.

As a result, the combined low-cycle and high-cycle fatigue usage estimates are conservatively high. These conservatisms are in addition to the ASME Code factor of 2 on stress range and 20 on cycles to failure inherent in the code fatigue curves.

Only those components which exceed a CUF of 1.0 during the license renewal period require aging management.

Table 3-3 summarizes the projected fatigue life of those reactor internals components that could reach a fatigue usage equal to the ASME design limit of 1.0 within the 40- to 60-year time period over the population of all WOG plants based on a conservative approach of extrapolating the number of design cycles by 150%. The projected fatigue life was determined assuming no changes in material properties or component loadings in the extended lifetime period. Projected Fatigue Service Life was based on a CUF=1. Table 3-3 does not represent the actual usage for the license renewal period but rather is a conservative method of screening the internals components that either are, or are not, fatigue-sensitive in the license renewal term. As a result, only those components that are fatigue-sensitive and whose failure would prevent the internals from performing their intended functions have been included in Table 3-3. Based on this screening method, those components not included in Table 3-3 are not considered to be fatigue-sensitive for any WOG plant.

Therefore, with the exception of those reactor internals components identified in Table 3-3 as fatigue-sensitive based on a review of calculated fatigue usage factors for internals components designed to ASME Section III, Subsection NG, a review of hot functional test data, and a comparison of geometric and operating similarities, the effects of fatigue are not significant for the reactor internals components covered in this report. Fatigue-sensitive reactor internals components that require further evaluation are discussed in Section 4.0. Note that those components which are included in Table 3-3 may, or may not, be fatigue sensitive for any specific plant, and should be evaluated on a plant specific basis.

The preferred approach, shown in the first part of Figure 4-1, is to demonstrate that the fatigue effects anticipated for the license renewal term are bounded by the fatigue effects anticipated for the original service period. This includes an assessment of the number and severity of the RCS design transients anticipated during the extended period of operation relative to those assumed to occur in the Current Licensing Basis (CLB), and an assessment of the impact of changes to the reactor internals component material properties that may have occurred during the current licensing period.

Under Section 3.3, "AGING EFFECT MANAGEMENT SUMMARY," Section 3.3.10 is modified as follows:

3.3.10 Fatigue

The effects of fatigue require an evaluation only for reactor internals components which would be projected to exceed a CUF of 1.0 during the extended period of operation. This determination of fatigue-sensitive components should be based on a review of calculated fatigue usage factors for internals components, a review of hot functional test data, and a comparison of geometric and operating similarities. For all other reactor internals components covered by this report, the effects of fatigue are not significant (see Subsection 3.2.10), and an evaluation or an aging management program for this effect will not be required for these components during an extended period of operation. For those components that would be projected to exceed a CUF of 1.0, this effect is discussed in Subsection 4.2.1, AMP-4.5. Further evaluation of the baffle/former and core barrel/former bolts is discussed in Subsection 4.2.2, AMP-4.6 and AMP-4.7.

4.2 ADDITIONAL ACTIVITIES AND PROGRAM ATTRIBUTES

4.2.1 Aging Management Program for Fatigue (AMP-4.5)

The AMP attributes for fatigue are shown in Table 4-6.

Both main assemblies, upper internals, and lower internals can be removed for inspection. Examination Category B-N-3 of Section XI, Subsection IWB, provides requirements for the visual (VT-3) examination of accessible surfaces of core support structures that can be removed from the reactor vessel. These requirements refer to the relevant conditions defined

in IWB-3520.2, which include "loose, missing, cracked, or fractured parts, bolting, or fasteners." Since manifestation of excessive fatigue damage is expected to be fatigue crack initiation on the surface of an affected item, the VT-3 examination is adequate for the detection of significant fatigue damage. If any relevant condition is identified, IWB-3142 provides options for the timely correction of the condition, such as: (1) acceptance by supplemental surface and/or volumetric examination to characterize the indication more accurately; (2) acceptance by analytical evaluation, which may include flaw evaluation and/or more frequent examination of the item; and (3) acceptance by corrective measures, repairs, or replacement.

For those cases when fatigue-sensitive components are essentially inaccessible to inservice examination, in accordance with Examination Category B-N-3, and where the cyclic loadings are sufficiently uncertain to preclude the effective use of detailed fatigue design analysis, alternatives for managing the effects of the age-related degradation are described in Section 4.2. Barrel/former and baffle/former assembly bolts are in this category (see Subsection 4.2.2).

To summarize, while aging management options for fatigue depend on the final United States Nuclear Regulatory Commission (U.S. NRC) position for license renewal, a flowchart, as outlined in Figure 4-1, provides guidance for the management of fatigue in the license renewal term.

The primary step is to demonstrate that the fatigue effects anticipated for the license renewal term are bounded by the fatigue effects anticipated for the original service period. Included in this step is the assessment of the number and severity of the RCS design transients anticipated during the extended period of operation relative to those assumed to occur in the CLB. Also included in this step is the assessment of the impact of changes to the reactor internals component material properties that may have occurred during the current licensing period.

Acceptable results from this step will indicate whether the component(s) can continue to operate during the extended period of operation in conjunction with the requirements of Examination Category B-N-3 of Section XI, Subsection IWB. Unacceptable results from this step would lead to the development of a fatigue license renewal strategy. Development of this fatigue strategy could include:

- Evaluation of conservatisms in the fatigue evaluations to increase fatigue margins
- Review of actual plant RCS primary-loop transient data to assess the actual number and severity of actual plant transients
- Re-evaluation of the cumulative fatigue usage factor for the license renewal term in accordance with the procedures of Section III, Subsection NG-3200
- Performance of a consequences of failure analysis
- Application of risk-based technology

- Application of fracture mechanics technology
- Monitoring, inspection, diagnostics, and testing

TABLE 4-6
AGING MANAGEMENT ACTIVITIES AND PROGRAM ATTRIBUTES FOR FATIGUE (AMP-4.5)

Attribute	Description
Scope	Fatigue effects on fatigue sensitive components
Surveillance Techniques	• Visual examination per ASME Section XI, Subsection IWB, Examination Category B-N-3, and Draft Subsection IWG • Loose parts monitoring • Neutron noise monitoring • Enhanced surveillance per fatigue management program
Frequency	ASME Section XI for visual examination, IWB-2410, -2420, -2430, Draft IWG-2410, -2420, -2430
Acceptance Criteria	Acceptable cumulative usage factor for license renewal term
Corrective Actions	Fatigue management program - see Subsection 4.2.1 and Figure 4-1
Confirmation	Meets ASME Code fatigue requirements

RAI #6 Management of Cracking and Neutron Irradiation Embrittlement

The topical report indicates that effects of cracking due to irradiation embrittlement and IASCC are managed by AMP-4.1 through visual examination, loose parts monitoring and supplemental examination. VT-3 visual examination as required by Examination Category B-N-2/B-N-3 of Subsection IWB of ASME Code Section XI is not adequate for detecting IASCC. The activities for managing IASCC and irradiation embrittlement should be revised to provide a more effective management program. One acceptable program for managing these aging effects is outlined in the draft SER for the Calvert Cliffs license renewal application (Ref. 2).

As an alternative AMP for IASCC and neutron irradiation embrittlement, the draft SER for the Calvert Cliffs license renewal application (Ref. 2) indicates that the applicant has committed to a two-part approach for managing IASCC and neutron embrittlement of RVI components. The first part of this approach is the use of supplemental (enhanced VT-1) examination of RVI components as part of the 10-year ISI program. This supplemental (enhanced VT-1) examination would be performed on the RVI components believed to be the limiting components for cracking, considering both the susceptibility of the component to the aging mechanism, as well as the material properties (in particular the fracture toughness) and the operating stresses on the component. These examinations would apply to all RVI components except for bolting.

The second part of this approach involves consideration of data and evaluations from industry research activities to determine the susceptibility of RVI components to IASCC and neutron embrittlement. Should these data or evaluations indicate that the supplemental (enhanced VT-1) examinations can be modified or possibly eliminated, the applicant would be required to provide plant specific justification to demonstrate the basis for the modification or elimination.

The topical report should be revised to provide a more effective aging management program for IASCC and neutron irradiation embrittlement. An acceptable alternative is the program committed to by the applicant for license renewal of the Calvert Cliffs plant.

RESPONSE

Susceptibility assessments will be conducted to identify limiting components based on the additional data from research activities currently underway. The need for supplemental examinations (VT-1) will be established as part of a 10-year ISI.

Augmented inspections and/or enhanced VT-1 examination of Westinghouse internals can be used on those components where access allows this to be conducted. Examples of the components that would be suitable for this type of inspection are baffle plates and baffle corner plates. Baffle bolts cannot be inspected in such a manner due to the limited access. A revised aging management program will be developed for baffle bolts. Such a program will be developed based on the current examinations of internals components, on the data being developed from the materials from these components, from the PWR Materials Reliability Project (see the responses to RAI's #1 and #2), and on an evaluation of the fluence and loading on these components.

MODIFICATIONS TO THE TOPICAL REPORT

4.1.1 Aging Management Program for Irradiation Embrittlement and Irradiation-Assisted Stress Corrosion Cracking (AMP-4.1)

4.1.1 Aging Management Program for Irradiation Embrittlement and Irradiation-Assisted Stress Corrosion Cracking (AMP-4.1).1.1 Aging Management Program for Irradiation Embrittlement and Irradiation-Assisted Stress Corrosion Cracking (AMP-4.1).1.1 Aging Management Program for Irradiation Embrittlement and Irradiation-Assisted Stress Corrosion Cracking (AMP-4.1).1.1 Aging Management Program for Irradiation Embrittlement and Irradiation-Assisted Stress Corrosion Cracking (AMP-4.1)

(The last paragraph will be modified as follows)

Subsection 2.6.2 refers to baffle/former bolt cracking in French and Belgian reactors attributed possibly to IASCC. The fluence level at these bolts in 60 years' total service will exceed the threshold level given in Subsection 3.3.3. Moreover, the bolt stresses are high and ASME Section XI examinations cannot always detect cracking. Therefore, the effects of irradiation embrittlement and IASCC are potentially significant for baffle/former and barrel/former bolts. The barrel/former bolts have been included in this category because they exceed the fluence level threshold, are in the same assembly, and also have high tensile stresses. The aging management program for the baffle/former and barrel/former bolts is discussed in Section 4.2.

As a result of the current examinations of internals components, the data being developed from the materials from these components and from the PWR Materials Reliability Project, and on an evaluation of the fluence and loading on these components, modified guidance for managing the effects of irradiation embrittlement and IASCC may be developed by the industry. Any changes to the current programs will be reflected in plant specific license renewal applications.

RAI #7 Aging Effects and Management for Cast Austenitic Stainless Steel (CASS)

The RVI components fabricated from CASS are potentially subject to a synergistic loss of fracture toughness due to the combination of thermal and neutron irradiation embrittlement. This enhanced loss of fracture toughness is not accounted for within the topical report nor in guidance in revisions to EPRI TR-106092 (Ref. 3). Further, the topical report rules out consideration of thermal embrittlement of RVI CASS components based upon the lack of molybdenum in the materials. The NRC staff does not find this position of considering only thermal embrittlement to be acceptable. A modified screening approach should be used that is similar to that proposed in EPRI TR-106092 (Ref. 3), but also reflecting the potential synergistic effects of neutron irradiation and thermal embrittlement. One acceptable program is outlined below, consistent with the draft SER for the Calvert Cliffs license renewal application (Ref. 2).

The modified approach described in the draft SER for the Calvert Cliffs license renewal application (Ref. 1) consists of either a supplemental (enhanced VT-1) examination of the affected components as part of the applicant's 10-year ISI program during the license renewal term, or a component-specific evaluation to determine the susceptibility to loss of fracture toughness. The proposed evaluation will look first at the neutron fluence of the component. If the neutron fluence is greater than 1×10^{17} n/cm^2 (E > 1 MeV), a mechanical loading assessment would be conducted for the component. This assessment will determine the maximum tensile loading on the component during ASME Code Level A, B, C, and D conditions. If the loading is compressive or low enough to preclude fracture of the component, then the component would not require supplemental inspection. Failure to meet this criterion would require continued use of the supplemental (enhanced VT-1) inspection. If the neutron fluence is less than 1×10^{17} n/cm^2 (E > 1 MeV), an assessment would be made to determine if the affected component(s) are bounded by the screening criteria in EPRI TR-106092 (Ref. 3), modified as described below. In order to demonstrate that the screening criteria in EPRI TR-106092 (Ref. 3) are applicable to RVI components, a flaw tolerance evaluation specific to the RVI would be performed. If the screening criteria are not satisfied, then a supplemental (enhanced VT-1) inspection will be performed on the component.

The CASS components should be evaluated to the criteria in EPRI TR-106092 (Ref. 3) with the following additional criteria:

- *Statically cast components with a molybdenum content meeting the requirements of SA-351 Grades CF3 and CF8 and with a delta ferrite content less than 10 percent will not need supplemental examination.*
- *Ferrite levels will be calculated using Hull's equivalent factors or a method producing an equivalent level of accuracy (±6 percent deviation between measured and calculated values).*
- *Cast austenitic stainless steel components containing niobium are subject to supplemental examination.*
- *Flaws in CASS with ferrite levels less than 25 percent and no niobium may be evaluated using ASME Code IWB-3640 procedures.*
- *Flaws in CASS with ferrite levels exceeding 25 percent or niobium will be evaluated using ASME Code IWB-3640 procedures. If this occurs, fracture toughness data will be provided on a case-by-case basis.*

Components that have delta ferrite levels below the screening criteria have adequate fracture toughness and do not require supplemental inspection. Components that have delta ferrite levels exceeding the screening criteria may not have adequate fracture toughness, as a result of thermal embrittlement, and do require supplemental inspection.

The topical report should be revised to provide a more effective aging management program for cast austenitic stainless steel. An acceptable alternative is the program committed to by the applicant for license renewal of the Calvert Cliffs plant.

RESPONSE

The possible synergistic interaction of thermal and neutron embrittlement of CASS needs to be carefully considered with respect to the possible embrittling mechanisms involved and the available data for both types of embrittlement.

It appears that the fluence level of 10^{17}n/cm^2 was taken from the data for the onset of embrittlement in ferritic pressure vessel steels. This threshold is expected to be much higher in stainless steel weld and base metal materials. The primary mechanism for the embrittlement in these steels is the precipitation of a copper rich phase with possible contributions from nickel and phosphorous. The mechanism of thermal embrittlement below 500°C in the delta ferrite of CASS or of austenitic welds is primarily due to the spinodal decomposition of the chromium rich ferrite to produce variations in chromium content in the ferrite which is referred to as alpha prime embrittlement. There is no copper in these materials. In other words, the mechanisms of embrittlement are quite different for the two different types of ferrite. The data for many welds irradiated at intermediate temperatures (370°C to 430°C), even those with high molybdenum, show that "exposures up to 1 dpa have no significant effect on fracture resistance (Ref. 4)." For the PWR spectrum 1 dpa is 7 x 10^{20} n/cm^2. The literature data on castings is limited. (Ref. 5) That which is available indicates that the fracture toughness of an SA351 CF8 casting with 15% delta ferrite behaves in a similar manner to a 308SS weldment with 7% delta ferrite when irradiated (Ref. 6). Thus, any effects of thermal and neutron embrittlement are not expected until significant fluence at temperature is accumulated.

The major use of CASS in the internals of some of the Westinghouse PWR is the lower core support casting. The fluence at 32 EFPY for this component is typically less than 1019 n/cm2and at 48 EFPY will still be less than the 1 dpa fluence cited above. Therefore, if the casting is acceptable based on the guidelines of EPRI TR-106092, no additional concerns should be addressed due to neutron fluence. The temperature of operation of the lower core support casting is expected to be close to the core inlet temperature (~520°F) which is significantly less than that at which the above referenced data was generated leading to a degree of conservatism in the argument. A rough calculation of the effect of lowering the temperature from 370°C where the reference data is cited to the conservatively expected temperature of 330°C (utilizing an estimated activation energy of 30 K cal/mol) on the embrittlement suggests that the susceptibility is lower at least by a factor of 4. The casting will be evaluated in accordance with the guidelines of TR-106092 as modified according to the additional criteria listed in RAI #7.

The only other place where CASS is used in some of the internals of a Westinghouse PWR is as a mixing vane device in the upper internals. It is expected that the loading on these

components is sufficiently low that fracture will be precluded. These devices have been determined to not perform any intended function (see Table 2-1) and therefore aging management review is not required.

MODIFICATIONS TO THE TOPICAL REPORT

3.2.8 Thermal Aging

3.2.8.1 Mechanism Description

(no change)

3.2.8.2 Aging Effect Evaluation

The cast austenitic stainless steel lower core support forging is exposed to temperatures that could potentially lead to eventual thermal aging embrittlement, provided that the term of exposure is sufficiently long and that the other factors that control the extent of embrittlement (e.g., casting process, delta ferrite, and material chemistry) are unfavorable. The degradation of cast duplex stainless, if it occurs, is manifested by a decrease in fracture toughness, tearing modulus, and impact strength at room temperature. The fracture toughness, tearing modulus, and impact strength show only a moderate decrease at operating temperatures, 554°F to 617°F.

A review of thermal aging effects shows that cast austenitic stainless steel with ferrite contents as low as 10 percent are susceptible to thermal aging. Further, the structural welds in forged material could be susceptible to thermal aging. As stated above, all the cast duplex stainless steel reactor internals in the Westinghouse-designed NSSS are made from CF-8 or CF-8A.

While CF-8 material is susceptible to thermal aging at operating temperatures (354°F to 617°F), the remaining toughness is high with a Charpy value of 64 ft-lb and fracture toughness values of 750 in.-lb/in.^{2} for J_{Ic} and 3000 in.-lb/in.^{2} for J_{max} at room temperature for material with a high ferrite content (17 percent). Fracture mechanics evaluation of primary piping demonstrates structural integrity with Charpy impact energies as low as 2 ft-lb. Increasing the thermal aging temperature accelerates the thermal aging degradation of the fracture toughness of austenitic cast stainless steels. Using test results, higher temperature thermal aging data can be used to extrapolate to longer periods of time for thermal aging at lower thermal aging temperatures. Using an acceleration factor of 15 (which is conservative) for a thermal aging time for 752°F versus 617°F can project out to 450,000 hours of operation. CF-8 cast stainless steel is expected to have a Charpy value in excess of 28 ft-lb at the end of 60 calendar years or 48 effective full power years (EFPY).

Evaluations of cast internals components demonstrate that the effects of thermal aging for the reactor internals components are not significant and an evaluation or an aging management program for this effect will not be required during an extended period of operation.

RAI #8 Significance of Void Swelling

The topical report dismisses change of dimension of the RVI components due to void swelling as a significant aging effect due to (1) core management reducing neutron exposure levels such that the effects of swelling are either not significant or are limited to a small number of baffle-barrel region bolts, and (2) no degradation in ability of the structures in this region from meeting their intended functions. The NRC staff finds this evaluation of void swelling to be inadequate. EPRI TR-107521 (Ref. 7) cites one source which predicts swelling as great as 14 percent for PWR baffle-former assemblies over a 40-year plant lifetime. The issue of concern is the impact of change of dimension due to void swelling on the ability of the RVI to perform their intended function.

The WOG should address the following:

- *How much of a change in dimension would be required before the internals would not be able to meet their intended function?*
- *What programs are the WOG participating in that will evaluate the impact of the void swelling on the intended function of the internals?*
- *When will these programs provide data to determine whether void swelling could impact the intended function of the internals?*

Should it be determined that change of dimension by void swelling can impede the ability of the RVI to perform its intended function, then an appropriate aging management program would be required to assure that the need for corrective actions can be properly identified.

RESPONSE

Westinghouse conducted a program with French PWR units to make an assessment of the effect of dimensional changes of critical components on their functionality. Westinghouse believes that the swelling estimate of 14% in Ref. 7 is overly conservative for PWRs. The basis for this will be included in the topical report.

Since EPRI TR-107521 was written there have been significant new findings and re-evaluations of the data. One of the major items is the realization that the fluence levels on US plants are significantly less than first considered due to the use of low leakage core management strategies. The WOG is participating in the MRP programs and through the MRP is a major contributor and an active participator in the MRP task where void swelling is of major interest. At the last MRP meeting, it was reported that voids were observed in the center of the shank, just below the head of baffle bolts removed from a European plant. This is the region where the gamma heating raises the temperature of the bolt to that where it is possible that the fluence can cause voids. The swelling was calculated to be approximately 0.2% in this region of the bolt. Stresses within the bolt from this differential swelling effect are limited to relatively low levels by irradiation creep. The WOG continues to actively monitor new information in the area of swelling through this and other organizations, e.g., the ICG-EAC.

Also within the MRP there are programs to specifically evaluate the impact of void swelling on reactor components and an industry position is to be prepared for the MRP by the three owners groups collaborating with Pacific Northwest Laboratories. In addition, the WOG and the MRP are funding detailed metallographic examinations of the bolts and locking devices removed from

three US plants with the search and recording of voids using transmission electron microscopy being a specific part of the project.

The data on swelling are being evaluated at the moment and more data are being generated as part of the previously listed WOG and MRP programs. At present there have been no indications from the different bolt removal programs or from any of the other inspection and functional "evaluations" (e.g., refueling) that there are any discernible effects attributable to swelling. The industry position to consider the accumulating microscopic data, the engineering evaluations of the ramifications of swelling and the field observations is presently scheduled to be complete in 2001.

MODIFICATIONS TO THE TOPICAL REPORT

The information currently in the report on swelling (Section 3.1) will be moved to the section on Aging Management Review. Current Section 3.2, AGING MANAGEMENT REVIEW, will become Section 3.1, and the section on swelling will become section 3.1.11. The previous section 3.3 AGING EFFECT MANAGEMENT SUMMARY, will become Section 3.2. A new section for swelling will be added as 3.2.11.

The revised numbering scheme for the swelling information is shown here:

3.1.11 Swelling

In addition to the aging effects identified for the reactor internal components in Section 2.7, swelling has been postulated from laboratory testing for LMFBRs and is discussed in the following subsections.

3.1.11.1 Mechanism Description

Swelling, frequently referred to as cavity swelling or void swelling, is defined as a gradual increase in size (dimensions) of a given reactor internals component. Reactor internals components are fabricated from materials that contain nickel and a small amount of boron. Under reactor internals irradiation conditions, helium is generated in these materials by nuclear transmutation reactions. Cavity or bubble nucleation is accounted for by the helium-vacancy cluster evolution, while void formation occurs when helium bubbles grow beyond a critical size. Helium bubbles have diameters of 2 to 3 nm or less while voids have diameters larger than 4 nm. Helium helps to stabilize small vacancy clusters and promotes nucleation of voids. After helium bubble nucleation, if the temperature is high enough, the helium bubbles grow to a critical diameter. At the critical diameter, the helium bubbles convert to bias-driven voids. Void formation results in the swelling of the material.

3.1.11.2 Aging Effect Evaluation

The effect of irradiation on stainless steel has been extensively studied in programs directed toward their use in LMFBRs, also referred to as liquid metal reactors (LMRs). These studies identified three major materials problems: void swelling, irradiation creep, and radiation-induced embrittlement. The data for PWR applications are extremely limited, and the use of LMFBR

data is complicated by the effects of irradiation temperature, displacement rate, and displacement effectiveness. LMFBRs operate at higher temperatures and high displacement rates relative to those for PWRs.

During the past 30 years, swelling of PWR internals components was not considered a significant age-related degradation mechanism. However, Garner, et al. [Ref. 18] concluded that, based on LMFBR data, end-of-life exposures of some PWR internals will lead to significant levels (≥10 percent) of swelling. Foster, et al. [Ref. 19] concluded that at the approximate reactor internals end-of-life dose of 100 dpa, swelling would be less than 2 percent at irradiation temperatures between 572°F and 752°F. To date, field service experience in PWR plants has not shown any evidence of swelling.

Original core loading pattern strategies, known as "out-in" loading patterns, consisted of placing fresh fuel in all peripheral assembly core locations and burned fuel in all of the inboard assembly core locations. Peripheral assemblies are defined as those with one or two faces or one corner adjacent to the core baffle plates. Utility interest in reducing the rate of PWR vessel embrittlement by reducing the incident fast neutron flux to the reactor vessel through fuel management and core periphery modifications has grown in recent years. In addition, the fuel cycle cost advantages of reduced core neutron leakage coupled with higher permissible core power peaking limits have resulted in fuel management strategies with significantly lower power levels in the peripheral fuel assemblies than was the case with the traditional out-in fuel management. This low leakage loading pattern places burned fuel in some of the peripheral assembly locations and most of the fresh fuel assemblies in interior core positions.

Table 3-1 presents estimates of the representative ranges of neutron irradiation for the baffle plates for both types of loading patterns and at either the 40 or 60 year design life.

The relative vertical displacements of the baffle plates and the core barrel due to swelling will be defined by the average irradiation on the components. Therefore, bolt stresses from swelling due to the relative motion of the baffle plates and the core barrel can be described by the average irradiation values in Table 3-1. Using the data from Table 3-1 and Reference 19, the differential swelling could approach 1 percent at 60 years life for the out-in loading pattern and 0.5 percent for the low leakage loading pattern.

The maximum irradiation values in Table 3-1 will be the values that cause baffle/former bolt loadings due to local swelling. This localized effect results from the differential swelling between the 304 stainless steel baffle plate and the bolt materials, which exhibit much less swelling. Actual data to evaluate this are scarce but the available data suggest that this swelling could approach 3 percent at 60 years life for the out-in loading pattern and 1-2 percent for the low leakage loading pattern for a limited number of baffle/former bolts.

It is important to note that:

- Estimates using the available data indicate that the maximum swelling in PWR internals components is significantly less than the 10-percent value predicted by Garner, et al. [Ref. 18]

- The continued utilization of low leakage loading patterns will reduce the irradiation dose and hence the differential swelling and loadings on the bolts in the baffle/barrel region
- The magnitude of swelling will be mitigated by stress relaxation and irradiation creep within the bolt
- There exists a limited amount of data to estimate the swelling percentage as a function of dpa level

Plants now use some form of low leakage loading pattern for their core management strategy. Therefore, it is judged that swelling of the baffle plates, former plates, and core barrel will not prevent them from performing their intended function during the license renewal term.

Moreover, careful core management strategies can reduce the dpa dose levels in the baffle/barrel region structures to levels in which the effects of swelling on the loadings of the baffle/barrel bolts are either not significant or are limited to a small number of bolts. In either case, the intended functions of the baffle/former and barrel/former bolts would not be significantly degraded by swelling.

Industry data of swelling are currently being evaluated as part of WOG and MRP programs. At present, there have been no indications from the different bolt removal programs or from any of the other inspections and function evaluations that there are any discernible effects attributable to swelling, An industry position to consider the accumulated data, engineering evaluations of the ramifications of swelling, and the field observations is presently scheduled to be complete in 2001.

The following New Section on aging Effect Management will be added to the topical report:

3.2.11 Swelling

The effects of swelling can be potentially significant for those components which experience significant neutron irradiation while operating at elevated temperatures. However, actual plant operations do not appear to produce the conditions necessary for significant swelling. Fuel management schemes to reduce neutron leakage from the core have reduced one of the major factors contributing to swelling, and mechanisms such as creep and stress relaxation serve to reduce some of its adverse effects. It is judged that any actual swelling of the baffle plates, former plates, and core barrel will not prevent them from performing their intended function during the license renewal period.

The data on swelling are currently being evaluated and more data are being generated as part of WOG and MRP programs. At present there have been no indications from the different bolt removal programs or from any of the other inspection and functional "evaluations" (e.g., refueling) that there are any discernible effects attributable to swelling. The industry position to consider the accumulating microscopic data, the engineering evaluations of the ramifications of swelling and the field observations is presently scheduled to be complete in 2001.

RAI #9 ASME CODE LIMITATIONS ON STRESSES OR DEFORMATIONS

Section 2.4.1.2 of the topical report describes ASME Code limitations on stresses or deformations required to ensure a safe and orderly reactor shutdown in the event of an earthquake and major loss-of-coolant incident loading conditions. Describe the specific current licensing basis limitations, and demonstrate that the material properties of the RVI components will continue to meet these limits under the neutron irradiation embrittlement conditions which will exist at the end of the license renewal period.

RESPONSE

Bolts removed as part of the inspection and bolt replacement program in the lead plants have been subjected to various examinations and testing. This testing has shown that there is considerable ductility remaining in the irradiated material. The percentage elongation in the irradiated bolts is 30 to 60 percent. Therefore, these bolts would not be expected to fail in a brittle manner. The yield and ultimate strength found in the removed bolts were found to be within the expected ranges for irradiated material thus demonstrating the continued acceptability of these materials in the license renewal term.

MODIFICATIONS TO THE TOPICAL REPORT

None

RAI #10 INTENDED FUNCTIONS OF THE REACTOR VESSEL INTERNALS

Section 2.2 of the topical report describes the intended functions of the reactor vessel internals on system level. The staff believes that the rule [10 CFR 54.21(a)(3)] requires that a renewal applicant demonstrate that the intended functions are maintained at the basic structure or component level. The report should, therefore, include RVI component-level intended functions which may include, but not be limited, to the following intended functions:

- *Provide support and orientation of the reactor core (i.e., the fuel assemblies).*
- *Provide support, orientation, guidance, and protection of the control rod assemblies.*
- *Provide a passageway for the distribution of the reactor coolant flow to the reactor core.*
- *Provide a passageway for support, guidance, and protection for incore instrumentation.*
- *Provide a secondary core support for limiting the core support structure downward displacement.*
- *Provide gamma and neutron shielding for the reactor pressure vessel.*

RESPONSE

Most of the identified functions are already identified in the topical report Executive Summary and will be incorporated into Section 2.2.

MODIFICATIONS TO THE TOPICAL REPORT

2.2 COMPONENTS OF THE REACTOR INTERNALS SUBJECT TO AN AGING MANAGEMENT REVIEW

The reactor internals support the following intended functions:

- Provide the capability to shut down the reactor and maintain it in a safe shutdown condition
- Prevent failure of all nonsafety-related systems, structures, and components whose failure could prevent any of these functions
- Ensuring the integrity of the reactor coolant pressure boundary (bottom-mounted instrumentation flux thimbles only)

These component intended functions support the same RCS intended functions. In addition, since the bottom-mounted flux thimbles have been included in the scope of this report, the flux thimbles must ensure that the integrity of the reactor coolant pressure boundary is maintained. (Note that the inclusion of the flux thimbles in the scope of this report is arbitrary. They are the only pressure boundary component included here, and on a plant specific basis, could also be evaluated together with other pressure boundary components).

Specific functions can also be defined for the individual subcomponents comprising the reactor vessel internals as follows:

1. Provide support and orientation of the reactor core (i.e., the fuel assemblies).
2. Provide support, orientation, guidance, and protection of the control rod assemblies.
3. Provide a passageway for the distribution of the reactor coolant flow to the reactor core.
4. Provide a passageway for support, guidance, and protection for incore instrumentation.
5. Provide a secondary core support for limiting the core support structure downward displacement.
6. Provide gamma and neutron shielding for the reactor pressure vessel.

Table 2-1 provides a matrix of the reactor vessel internals intended function (by number) for each of the reactor internals subcomponents that specifically support each intended function.

The reactor internals components listed in Table 2-1 that perform an intended function in a passive manner and which are long-lived are subject to an aging management review (see Table 2-2).

In order to provide a note of clarification to WOG utilities who will be using / referencing this report, the following note will be associated with the bottom-mounted incore instrumentation flux thimbles in Section 1.2 REACTOR INTERNALS SCOPE:

- Bottom-mounted incore instrumentation columns and flux thimbles *

* The inclusion of the flux thimbles in the scope of this report is arbitrary. They are the only pressure boundary component included here, and on a plant specific basis, could also be evaluated together with other pressure boundary components.

TABLE 2-1
SUMMARY OF REACTOR INTERNALS SUBCOMPONENTS SUPPORTING IDENTIFIED INTENDED FUNCTIONS

Part or Subcomponent	Intended Function (see Section 2.2)					
	1	2	3	4	5	6
Lower core plate and fuel alignment pins	Y	N	Y	Y	Y	N
Lower support forging or casting	Y	N	Y	Y	Y	N
Lower support columns	Y	N	N	Y	Y	N
Core barrel and core barrel flange	Y	N	Y	N	N	Y
Radial support keys and clevis inserts	Y	N	N	N	N	N
Baffle and former plates	Y	N	Y	N	N	Y
Core barrel outlet nozzle	N	N	Y	N	N	N
Secondary core support	Y	N	Y	Y	Y	N
Diffuser plate	N	N	Y	N	N	N
Upper support plate assembly	N	Y	N	N	N	N
Upper core plate and fuel alignment pin	Y	N	Y	N	N	N
Upper support column	N	Y	N	Y	N	N
Guide tube and flow downcomers	N	Y	N	N	N	N
Upper core plate alignment pin	N	Y	N	N	N	N
Holddown spring	N	N	N	N	N	N
Head and vessel alignment pins	N	Y	N	N	N	N
Control rod	N	N/A	N	N	N	N
Drive rod	N	N/A	N	N	N	N
Neutron panels/thermal shield	N	N	N	N	N	Y
Irradiation specimen guide	N	N	N	N	N	N
BMI columns and flux thimbles	N	N	N	Y	N	N
Head cooling spray nozzles	N	N	Y	N	N	N
Upper instrumentation column, conduit, and supports	N	N	N	Y	N	N
Mixing device	N	N	N	N	N	N
Bolts and locking mechanisms	Y	Y	Y	Y	Y	N
Specimen plugs	N	N	N	N	N	N

TABLE 2-2
SUMMARY OF REACTOR INTERNALS SUBCOMPONENTS REQUIRING AGING MANAGEMENT REVIEW

Part or Subcomponent	Aging Management Review Required?
Lower core plate and fuel alignment pins	YES
Lower support forging or casting	YES
Lower support columns	YES
Core barrel and core barrel flange	YES
Radial support keys and clevis inserts	YES
Baffle and former plates	YES
Core barrel outlet nozzle	YES
Secondary core support	YES
Diffuser plate	YES
Upper support plate assembly	YES
Upper core plate and fuel alignment pin	YES
Upper support column	YES
Guide tube and flow downcomers	YES
Upper core plate alignment pin	YES
Holddown spring	NO
Head and vessel alignment pins	YES
Control rod	NO
Drive rod	NO
Neutron panels/thermal shield	YES
Irradiation specimen guide	NO
BMI columns and flux thimbles	YES
Head cooling spray nozzles	YES
Upper instrumentation column, conduit, and supports	YES
Mixing device	NO
Bolts and locking mechanisms	YES
Specimen plugs	NO

REFERENCES FOR THESE RAI RESPONSES

1. References Thomas H. Essig to Lou Liberatori, Safety Evaluation of Topical Report WCAP-15029 "Westinghouse Methodology for Evaluating the Acceptability of Baffle-Former-Barrel Bolting Distributions Under Faulted Load Conditions" (TAC NO. MA1152), November 10, 1998.

2. "Safety Evaluation Report Related to the License Renewal of Calvert Cliffs Nuclear Power Plant, Units 1 and 2," dated March 1999.

3. EPRI Technical Report TR-106092, "Evaluation of Thermal Aging Embrittlement for Cast Austenitic Stainless Steel Components in LWR Reactor Coolant Systems," Electric Power Research Institute, September 1997.

4. J. Bernard and G. Verzeletti, "Elasto-Plastic Fracture Mechanics Characterization of Type 316H Irradiated Stainless Steel Up to 1 DPA," Proceedings of the Twelfth ASTM International Symposium on "Effects of Radiation on Materials, Williamsburg, Virginia, June 18-20, 1984.

5. W. J. Mills, "Fracture Toughness of Irradiated Stainless Steel Alloys," Nuclear Technology, Vol. 82, September 1988.

6. W. J. Mills, "Fracture Toughness of Type 304 and 316 Stainless Steels and Their Welds," International Materials Reviews, 1997, V42, #2, pp. 45-82.

7. EPRI Technical Report TR-107521, "Generic License Renewal Technical Issues Summary," Electric Power Research Institute, April 1998.