AmerGen

AmerGen Energy Company, LLC
Three Mile Island Unit 1
Route 441 South, P.O. Box 480
Middletown, PA 17057

Telephone: 717-944-7621

An Exelon/British Energy Company

10 CFR 50.90

December 06, 2000

5928-00-20217

U. S. Nuclear Regulatory Commission
Attention: Document Control Desk
Washington, DC 20555

Dear Sir or Madam:

SUBJECT: THREE MILE ISLAND NUCLEAR STATION, UNIT 1
OPERATING LICENSE NO. DPR-50
DOCKET NO. 50-289
LICENSE CHANGE APPLICATION (LCA) NO. 286

In accordance with 10 CFR 50.4(b)(1), enclosed is TMI Unit 1 Licensing Change Application (LCA) No. 286.

This LCA provides clarification and other improvements to the Decay Heat Removal Capability Technical Specifications (TS). Additionally, it fulfills a commitment from a meeting between GPU Nuclear (the previous owner of TMI Unit 1) and the NRC in a Predecisional Enforcement Conference on April 23, 1999 to rewrite portions of the Emergency Feedwater (EFW) TS Bases. The NRC's letter dated May 12, 1999, confirmed our commitments from the meeting that we will 1) revise the EFW TS bases, 2) revise the system description in UFSAR Chapter 10, and 3) provide training to clarify the intent that any two of the three installed pumps have the capability to supply either or both Once Through Steam Generators (OTSGs) with water at greater than the total flow requirements as defined in the UFSAR Chapter 14 LOFW analysis.

AmerGen has reviewed the EFW design and licensing basis for needed changes. UFSAR Chapter 10 was revised in UFSAR Update 15, which was submitted to the NRC pursuant to 10 CFR 50.71(e) on April 14, 2000. EFW design basis training was provided to the operators in Operator Training Cycle 00-2 (February 25, 2000 through March 24, 2000) and included in Engineering Support Personnel (ESP) Training that was completed in March 2000. This LCA includes the update of the EFW TS Bases and completes our commitments from the April 23, 1999 meeting.

This LCA includes a revision of the Limiting Conditions for Operation (LCO) for TS 3.4, "Decay Heat Removal Capability" regarding EFW System operability, conforming changes to the surveillance Table 3.5-2, "Accident Monitoring Instruments" for EFW Flow instruments, and

A001

TS 4.9.1.2, "Decay Heat Removal - Periodic Testing," for EFW to:

1) Incorporate a change to the EFW System design basis to reflect a benchmarked EFW System flow analysis completed in August 1999,
2) Implement a change to recognize the concept of EFW flowpath redundancy and apply it consistently throughout the TS,
3) Incorporate a new LCO with operability requirements for the redundant steam supply paths to the turbine-driven EFW Pump, and
4) Editorial changes to improve the clarity of the TS.

Included with this LCA are changes to the Bases for TS 3.4, which contained outdated information (as discussed with the NRC in a meeting in Rockville, MD on April 23, 1999), and a change to the bases for TS 3.5.5, "Accident Monitoring Instrumentation," regarding the description of pressurizer level instrument channels resulting from a plant modification. AmerGen requests that these Bases changes, which have been reviewed and approved in accordance with 10 CFR 50.59, be issued along with the amendment authorizing LCA No. 286.

Using the standards in 10 CFR 50.92, AmerGen has concluded that the proposed TS changes do not constitute a significant hazards consideration, as described in the enclosed analysis performed in accordance with 10CFR50.91(a)(1). Pursuant to 10 CFR 50.91(b)(1), a copy of this License Change Application is being provided to the designated official of the Commonwealth of Pennsylvania, Bureau of Radiation Protection, as well as the chief executives of the township and county in which the facility is located.

AmerGen requests NRC approval of this LCA by August 15, 2001. Please contact Bob Knight of TMI Licensing at (717) 948-8554 if you have any questions regarding this submittal.

Very truly yours,

Mark E. Warner
Vice President, TMI Unit 1

MEW/mrk

Enclosures: 1) Safety Evaluation and No Significant Hazards Consideration Analysis
2) Hand Markup of Technical Specifications Revised Pages

cc: USNRC Regional Administrator, Region I
USNRC TMI Senior Resident Inspector
USNRC TMI Unit 1 Senior Project Manager
Chairman, Board of Supervisors of Londonderry Township
Chairman, Board of County Commissioners of Dauphin County
Director, Bureau of Radiation Protection, PA Department of Environmental Resources
File No. 99064

AMERGEN ENERGY COMPANY, LLC

Three Mile Island Nuclear Station, Unit 1
Operating License No. DPR-50
Docket No. 50-289
License Change Application (LCA) No. 286

COMMONWEALTH OF PENNSYLVANIA)
) SS:
COUNTY OF DAUPHIN)

This LCA is submitted in support of Licensee's request to change Appendix A to Operating License No. DPR-50 for Three Mile Island Nuclear Station, Unit 1. The primary purpose of this LCA is to provide changes to the Technical Specifications for Decay Heat Removal Capability regarding requirements for the Emergency Feedwater (EFW) System and to fulfill a commitment from a meeting between GPU Nuclear (the previous owner of TMI Unit 1) and the NRC on April 23, 1999 to revise the EFW TS Bases. Enclosed is a hand markup of the current Technical Specification pages for the Appendix A Technical Specifications. All statements contained in this submittal have been reviewed, and all such statements made and matters set forth therein are true and correct to the best of my knowledge.

AmerGen Energy Company, LLC

BY: _____
Vice President, TMI Unit 1

Sworn and subscribed to before me this 6th day of December, 2000.

SEAL:

Suzanne C. Miklosik
Notary Public

Notarial Seal
Suzanne C. Miklosik, Notar
Londonderry Twp., Dauphi
My Commission Expires No 2003
Member, Pennsylvania Associa

Enclosure 1

TMI Unit 1 License Change Application No. 286
Safety Evaluation and No Significant Hazards Consideration Analysis

I. License Change Application (LCA) No. 286

AmerGen requests that the following revised replacement pages be inserted into the existing TMI Unit 1 Technical Specifications (TS):

Pages 3-25, 3-26, 3-26a, 3-26b, 3-26c, 3-40b, 3-40c, 4-52, and 4-52a.

A hand markup of the current TS and Bases pages is provided in Enclosure 2.

II. Reason For Change

The purpose of this LCA is to:

1. Fulfill a commitment made to the NRC in a meeting in Rockville, MD on April 23, 1999 to revise the EFW Bases with updated information and added clarity;

2. Revise the Limiting Condition of Operation (LCO) for the Emergency Feedwater (EFW) System in Specification 3.4.1.1.a to:

   a. Define and clarify the concept of EFW flowpath redundancy as described in the Bases.
   b. Incorporate operability requirements for the redundant steam supply paths to the turbine-driven EFW Pump.
   c. Provide a 72 hours allowed action time with any EFW Pump or flowpath inoperable. This is more conservative than the current TS, since the current TS would permit continued operation with up to one redundant flowpath to each OTSG inoperable.
   d. Provide a 1 hour allowed action time with any two EFW Pumps inoperable or both redundant flowpaths to a single OTSG inoperable. This is more conservative than the current TS, since the current TS would permit operation for 72 hours with both redundant flowpaths to a single OTSG inoperable.
   e. Revise and clarify EFW Pump and flowpath operability requirements during surveillance testing.

3. Incorporate a change to the Bases for Specification 3.5.5, "Accident Monitoring Instrumentation," regarding the description of pressurizer level instrument channels, which was modified in accordance with 10 CFR 50.59 when the Bailey transmitters were replaced; and

4. Make minor administrative and editorial changes to improve the consistency and clarity of the technical specifications.

The following lists the changes proposed by LCA No. 286 addressing each of the affected pages (referring to the existing TS page numbers).

Page 3-25

1. Conforming changes are made to the subsections of TS 3.4.1.1, to clarify the concept of a redundant EFW flowpath as discussed in the revised TS 3.4 Bases as follows: "Flowpath redundancy is provided for those portions of EFW flowpath containing active components between the pumps and each of the OTSGs. Each EFW line to an OTSG includes two redundant flowpaths each equipped with an automatic control valve (EF-V-30A/B/C/D) and a manual isolation valve (EF-V-52A/B/C/D)."

2. TS 3.4.1.1 is revised to require "two OPERABLE main steam supply paths" rather than "an OPERABLE steam supply." This clarifies the issue of whether an operable steam supply system requires the operability of the steam supplies from both OTSGs. A new specification is being added (similar to Standard Technical Specifications requirements) to provide a seven (7) day allowable outage time for loss of one of the two redundant steam supply paths to the turbine-driven EFW Pump. The new specification is being added as revised TS 3.4.1.1.a(1); thus the current subsections of 3.4.1.1.a are renumbered.

3. The current TSs 3.4.1.1.a(1) and 3.4.1.1a(2) are being revised for the purposes described above in Item No. 1 of the statement of purpose for this LCA in II, "Reason For Change." These specifications are being renumbered as 3.4.1.1.a(2) and 3.4.1.1.a(3), respectively, as a result of adding a new specification to address redundant steam supply paths as 3.4.1.1.a(1).

4. For the purposes described above in Item No. 1 of the statement of purpose for this LCA in II, "Reason For Change," the note following TS 3.4.1.1.a(2) of the current TS is being combined with the requirements of TS 4.9.1.2 into a new TS 3.4.1.1.a(4) to clarify EFW Pump and flowpath operability requirements during surveillance testing. The new TS 3.4.1.1.a(4) also incorporates the following changes pertaining to operability requirements during surveillance testing:
   a. The new paragraph TS 3.4.a(4)(b) requires that: "A qualified individual, in communication with the Control Room, shall be designated to remain continuously near the location required to realign the affected valves from the test mode to their operational alignment upon instruction from the Control Room." The revised wording accomplishes the following changes:
      (1) The restriction on having an individual to reposition the EFW flowpath valves from the test position to the operational position is revised to allow that individual to perform other work functions in the area of the valves. Rather than "at" the location of the valves, the wording is revised to require that the individual be "near" the location; and the word "dedicated" is changed to "designated."
      (2) Regarding the requirements for having an individual to reposition the EFW flowpath valves from the test position to the operational position on instructions from the "Control Room Operator," the new wording is revised to require action upon instruction from the "Control Room." This editorial change clarifies the terminology since instructions could likely be given by control room personnel

other than the Control Room Operator. Substitution of the word "upon" for "on" is a non-substantive editorial change.

b. The restrictions on flowpath inoperability during surveillance testing are expanded to include the EF-V-30 control valves, which may be remotely operated from the control room.
c. The 8-hour limitation currently imposed on pump inoperability during testing is applied to flowpath inoperability, which currently has no time limit specified in TS 4.9.1.2.

5. The double asterisk at the bottom of the page is revised to clarify the requirements for maintaining EFW operability when HSPS is not required to be operable as follows: "When HSPS is not required to be OPERABLE, EFW is OPERABLE by manual control of pumps and valves from the Control Room." This clarification is added to ensure a proper understanding of the operability requirements when the operability of EFW is required and HSPS is not (between 250°F RCS temperature and the operating conditions where the reactor is critical).

6. Editorial changes on this page are as follows:
   a. The header for TS 3.4 is revised to define the acronym "DHR" for "decay heat removal" to be used for the DHR function as well as the DHR System.
   b. TS 3.4.1 is revised to reflect the use of the acronym "RCS" for the "Reactor Coolant System."
   c. TS 3.4.1 is revised to spell out the word "degrees" in place of the degree symbol, which is not a standard word processor symbol.
   d. TS 3.4.1.1 is revised to delete the redundant phrase, "With the Reactor Coolant System temperature greater than 250°F," that is repeated from the higher tier TS 3.4.1.
   e. TS 3.4.1.1 is revised to reflect the use of the acronyms "EFW" for "Emergency Feedwater" and "OTSG" for "Once Through Steam Generator."
   f. Subsections of TS 3.4.1.1 are revised to capitalize the first letter in the term "pump" for "EFW Pump" for consistency with other TS.
   g. The terms "flowpath(s)" and "flow path(s)," are equivalent and both appear throughout TS 3.4. For consistency, the term "flowpath" replaces the two word combination "flow path."
   h. Because of the additional text added to this page, a page break is needed between TS 3.4.1.1.a and 3.4.1.1.b.
   i. TS 3.4.1.1.b is revised to reflect the use of the acronym "TBV(s)" for use of the acronym for the "turbine bypass valve(s)" and the first letter of the words for these components is capitalized as is the convention throughout the TS.
   j. TS 3.4.1.1.c is revised to reflect the plural of the acronym "CST" for the "condensate storage tanks" and the first letter of the words for these components is capitalized as is the convention throughout the TS.
   k. TS sections 3.4.1.1.c(1) and 3.4.1.1.c(2) which state the requirement to be in "at least HOT SHUTDOWN within the next six hours," are revised to delete the words "at

least." This change is editorial since these words are not necessary for an understanding of the requirements and appear to be potentially confusing when referring to an operating condition that is related to a reactor power level. The words "at least" may indicate an option or preference for cooling down sooner; however these words, which are not included in the STS. Removing these words does not remove the option of going to Cold Shutdown sooner and would not be expected to affect the interpretation of the specification.

l. To clarify the wording with better grammar, TS 3.4.1.1.c(2) is revised to read "With more than one CST inoperable, restore at least one CST…" rather than "With more than one CST inoperable, restore the inoperable CST…"
m. The two asterisks at the bottom of the page are revised to refer to "Specifications" rather than "Sections" for consistency with the terminology in other TS.

Page 3-26

1. Editorial changes on this page are as follows:
   a. The TS section heading is added for clarity to show that this page is a continuation of the Limiting Conditions for Operation (LCO) for the "Decay Heat Removal Capability" section.
   b. TS 3.4.1.2.1 and 3.4.2 are revised to spell out the word "degrees" in place of the degree symbol.
   c. Several locations on this page are revised to make use of the acronym "OTSG" for Once Through Steam Generator or Steam Generator.
   d. 3.4.1.2.1 is revised to define the acronym "MSSVs" for "Main Steam Safety Valves," "MSS Valves" or "Safety Valves" and these terms are replaced with the acronym in several locations on this page.
   e. TS 3.4.1.2.1 is changed to read: "…between 250 degrees F and HOT SHUTDOWN, and having been subcritical…" for clarity to replace the current wording, "from 250°F to HOT SHUTDOWN and subcritical…" to improve the grammar and to be consistent with the wording in the Bases and the revised wording in TS 3.4.1.2.2. This clarification also removes any unintended implication of applicability only while heating up through this temperature range and not for cooling down within this temperature range.
   f. TS 3.4.1.2.2 is changed to read: "…between HOT SHUTDOWN and 5% power, and…" for clarity to replace the current wording, "from HOT SHUTDOWN to 5% power, and…" for consistency with the wording in the Bases and the wording in TS 3.4.1.2.1. This clarification also removes any unintended implication of applicability only during a power increase to 5% and not for down power transients through this range.
   g. In TS 3.4.1.2.2, the term "over power" is revised to one word "overpower" consistent with other TS.
   h. TS 3.4.1.2.3 is revised to refer to a TS "Specification" rather than a TS "Section" for consistency with the terminology in other TS.

i. In TS 3.4.1.2.3, the word "INOPERABLE" is changed to lower case consistent with the convention of the TMI-1 TS where only defined terms appear in upper case in the specifications.
j. TS sections 3.4.1.2.3, which states the requirement to be in "at least HOT SHUTDOWN within the next six hours," is revised to delete the words "at least." This change is editorial since these words are not necessary for an understanding of the requirements and appear to be potentially confusing when referring to an operating condition that is related to a reactor power level. The words "at least" may indicate an option or preference for cooling down sooner; however, removing these words does not remove the option of going to Cold Shutdown sooner and would not be expected to affect the interpretation of the specification.
k. A page break is added at the end of TS 3.4.1.2.3.
l. TS 3.4.2 is revised to make use of the acronym "RCS" for "Reactor Coolant System."
m. TS 3.4.2 is revised to read, "less than or equal to 250 degrees F" rather than "250°F or less" to use more conventional terminology.
n. TS 3.4.2.1 is revised to delete the redundant phrase, "With the Reactor Coolant System temperature 250°F or less," that is repeated here from the higher tier TS 3.4.2 in the line above it.
o. TS sections 3.4.2.1.a and 3.4.2.1.b are revised to reflect use of the acronym "DHR" for "Decay Heat Removal," to add the word "Loop" in parentheses next to the equivalent word "String" for consistency with the use of the term "DHR Loop" in the bases and to clarify that these words are used interchangeably at TMI. This is consistent with the current TS 3.4.2.5, which provides action for less than "the required loops OPERABLE."
p. TS 3.4.2.1.a and TS 3.4.2.1.b are revised to correct the grammar and move the quotation marks outside of the period.
q. TS 3.4.2.1c and 3.4.2.1d are revised to reflect use of the acronym "RCS" for "Reactor Coolant." There was no intended distinction implied in section 3.4.2.1c and 3.4.2.1.d by use of the term "Reactor Coolant Loop" rather "RCS Loop."
r. TS 3.4.2.1.c and 3.4.2.1.d are revised to reflect the use of the acronym "EFW" for "emergency feedwater."
s. TS 3.4.2.1.c and 3.4.2.1.d are revised to specify the operability of an RCS Loop "...and its associated OTSG with an EFW Pump and a flowpath," rather than operability of an RCS Loop "..., its associated OTSG, and its associated emergency feedwater flowpath." This clarification is needed to accommodate the revised definition of an EFW flowpath, although there is no change to require flowpath redundancy. The change to include the word "Pump" is also editorial in that a pump is needed to provide flow and there is no change to the meaning or interpretation by adding it.

Page 3-26a

1. Editorial changes on this page are as follows:
   a. The TS section heading is added for clarity to show that this page is a continuation of the LCO for the "Decay Heat Removal (DHR) Capability" section.
   b. TS sections 3.4.2.2 and TS 3.4.2.3 are revised to utilize the acronym "DHR" for "decay heat removal."
   c. TS 3.4.2.3 is revised to put the terms "operable" and "Refueling Shutdown" in all upper case letters, consistent with the convention in the TMI Unit 1 TS of the terms defined in TS Section 1 in all capital letters.
   d. TS 3.4.2.3 is revised to capitalize the first letter of the words "Reactor Vessel" consistent with the convention of the TMI Unit 1 TS for names of major plant components.
   e. TS 3.4.2.3 is revised to refer to a "Specification" rather than a "Section" for consistency with the terminology in other TS.
   f. TS 3.4.2.5 is revised to clarify that the action specified applies with less than the "required means for maintaining DHR capability" rather than the "required loops operable" consistent with the terminology used in TS 3.4.2.1.
   g. The action statement in TS 3.4.2.5 is moved up and included with TS 3.4.2.1, consistent with the other TS 3.4 subsections that include the action statement in the LCO, deleting the subsection number 3.4.2.5.
   h. The bases that currently start on Page 3-26b are being moved to begin on the page 3-26a.

Page 3-26b

1. The third and fourth paragraphs on this page contained pump capacity statements that were found to be incorrect or outdated as discussed with the NRC in the meeting on April 23, 1999. This information has been reworded (in the insert to page 3-26b) to clarify the EFW System design basis.

2. Additional text is added to the Bases following the first paragraph of the Bases. The insert page 3-26b includes a revision to the EFW Bases with corrections and other clarifying information regarding the EFW System.

3. The current Bases text that reads: "The minimum amount of water in the condensate storage tanks…will allow cooldown to 250°F with steam being discharged to the atmosphere," has been revised to read as follows:

   "The minimum amount of water in the CSTs, required by Specification 3.4.1.1.c, provides at least 12 hours of DHR with steam being discharged to the atmosphere. This provides adequate time to align alternate water sources for RCS cooldown."

   This change provides recently validated information in the bases to update and correct a description that has not been questioned since original issuance of the TS Bases. Recent analyses have shown that there was never any basis to support the statement that the

minimum amount of water in the CSTs alone would allow cooldown to 250° F while steaming to atmosphere. The cooldown rate with steam being discharged to atmosphere is slowed down when steam pressure reduced; therefore, additional water is needed to complete the cooldown to 250°F. This revised wording reflects the current analyses that form the basis for providing a 12-hour coping period for any anticipated transient.

4. Editorial changes on this page are as follows:
   a. The TS section heading is added for clarity to show that this page is a continuation of the "Decay Heat Removal (DHR) Capability" Bases which now begin on the page 3-26a.
   b. The bases that start on page 3-26b of the current TS are being moved up to begin on the preceding page, 3-26a.
   c. At several locations on this page, the word "degrees" is spelled out in place of the degree symbol.
   d. At several locations on this page, terminology is revised to reflect the consistent use of the acronyms: "OTSG(s)," "DHR," "MSSV(s)," and "CSTs," which have been defined on previous pages.
   e. In the second paragraph on this page, in the reference to "Specification 3.4.1.2.1 and 3.4.1.2.2," the word "Specification" has been corrected to the plural, "Specifications."
   f. At several locations on this page, the word "Technical" is deleted to consistently refer to a TS section as a "Specification" rather than a "Technical Specification."
   g. In the second paragraph, the word "valve" is changed to "MSSV" and the words, "safety valves," are changed to "MSSVs" to clarify these terms.
   h. In the second paragraph on this page, the term "over power" is being changed to one word, "overpower," consistent with other TS.
   i. In the second paragraph, sixth sentence, the word "is" is changed to "has been" to correct the grammar as follows: "...sufficient to relieve reactor coolant pump heat and stored energy when the reactor ~~is~~ <u>has been</u> subcritical by 1% delta K/K for at least one hour."
   j. In the second paragraph, seventh sentence, the word "since" is changed to "subsequent to" for greater clarity as follows: "...had been subcritical by 1% delta K/K for at least one hour ~~since~~ <u>subsequent to</u> power operation above 5% full power."
   k. In the last paragraph, third sentence, there is a period followed by a comma. This appears to have been a typographical error where the correct reference should have been "TS 3.4.1.1.c." Therefore, the missing "c" is being added.
   l. In the first sentence of the first paragraph and last sentence of the last paragraph on this page, the first letter in the word "System" following the system name is capitalized.

<u>Page 3-26c</u>

1. The last paragraph in the current Bases has been revised in the insert to page 3-26b to clarify the current EFW system design and flow delivery requirements and to improve the description of the EFW system. The nominal pump capacity statements (e.g., "full

capacity" and "half-capacity") do not represent the current design basis of the EFW System and have been removed.

2. A new Reference 3 has been added for UFSAR Section 10.6 - "Emergency Feedwater System."

3. A new Reference 4 has been added for the calculation of heat generation rate which provides the basis for TS 3.4.2.4 regarding the passive means for decay heat removal that is available after a shutdown of sufficient duration that ambient losses are capable of removing the decay heat generated.

4. Editorial changes on this page are as follows:
   a. The TS section heading is added for clarity to show that this page is a continuation of the "Decay Heat Removal (DHR) Capability" Bases.
   b. In the first sentence on this page the term "the RCS" is changed to "RCS temperature" for clarity.
   c. At two locations of the first paragraph, the word "degrees" is spelled out in place of the degree symbol.
   d. In the first sentence of the first paragraph, the words "...OTSG and its associated emergency feedwater flowpath..." are revised to read, "...OTSG with an EFW Pump and a flowpath..." This clarification is needed to accommodate the revised definition of an EFW flowpath, although there is no change to require flowpath redundancy for decay heat removal conditions below 250°F, when EFW is not required to be operable. The change to include the word "Pump" is also editorial in that a pump is needed to provide flow to the OTSG. There is no change to the meaning or interpretation by adding the word "Pump."
   e. In two locations in the first paragraph the word "Loop" is added in parentheses following the word "string" for consistency in use of the term "DHR Loop" in other locations in these bases and to clarify that the terms "loop" and "string" are used interchangeably at TMI. In the first occurrence on this page, the word "string" is changed to begin with a capital letter.
   f. In several locations on this page, terminology is revised to reflect the consistent use of the acronyms "DHR," and "EFW," which have been defined on previous pages.
   g. At two locations in the first paragraph, the term "TS" is revised to consistently refer to a TS section as a "Specification."
   h. In the third sentence of the first paragraph, the term "flowpath" replaces the two word combination "flow path." The terms "flowpath(s)" and "flow path(s)," are equivalent and both appear throughout TS 3.4.
   i. In the fourth sentence of the first paragraph, the term "operable" is changed from all upper case letters to all lower case letters, consistent with the convention in the TMI Unit 1 TS that terms defined in TS Section 1 appear in all capital letters in the Specifications but not in the Bases.
   j. In the fifth (last) sentence of the first paragraph on this page, the word "system" is used twice, referring to two different systems. This sentence is revised to clarify that

the first use of the word "system" refers to a "DHR Loop" and the second use of the word "system" refers to the "RCS."

k. The fourth paragraph on this page has been reworded and moved to the end of the first paragraph of the Insert for page 3-26b. The revised words are as follows: "An unlimited supply of river water to the EFW Pumps is available using either of the two Reactor Building Emergency Cooling Water (Reactor River Water) Pumps (RR-P-1A/B)."

l. In the second paragraph on this page, the word "loop" is revised to begin with a capital letter; the word "operable" is revised to begin with a lower case letter, and the term "reactor vessel" is revised in three places to begin each word with a capital letter. The purpose of these editorial changes is to be consistent with other TS,

m. In the third paragraph on this page, the term "off loading" is corrected to a hyphenated word, "off-loading."

n. In reference 2 of the Bases, the word "Section" is added before the UFSAR section number and quotes are added for the section title for consistency with other similar references.

Page 3-40b

1. The third paragraph on this page, which describes one of the pressurizer level instrument channels from NNI as having 3 differential pressure instrument strings through a single indicator, has been revised to describe 2 differential pressure instrument strings. This change to the Bases for TS 3.5.5, "Accident Monitoring Instrumentation," was evaluated in the 1991 10 CFR 50.59 Safety Evaluation (SE) for the modification to replace the obsolete Bailey transmitters with Rosemount transmitters. This bases change is required to reflect the current design as installed in the plant and described in the FSAR into the Bases.

2. Editorial changes on this page are as follows:
   a. A section heading is added for clarity to show that this page is a continuation of the "Accident Monitoring Instrumentation" Bases.
   b. The first paragraph on this page is revised to define and reflect the use of the acronym "EFW" for "emergency feedwater."
   c. In the first paragraph, second sentence, the first letter in the word "System" is capitalized for consistency within the first sentence in this paragraph and consistency with other TS.
   d. The third paragraph is revised to capitalize the first letter in the word "pump" for "EFW Pump" for consistency with other TS.

Page 3-40c

1. Editorial changes on this page are as follows:
   a. Consistent with the revised definition of a flowpath, in Table 3.5-2, "Accident Monitoring Instruments," item No. 4, the requirements for the number of EFW flow instrument channels and the minimum number of EFW flow instrument channels is revised to reflect a per steam generator basis rather than a per flowpath basis. This change is editorial because there is no change to intent of this specification.

b. The second and third columns in Table 3.5-2 are left adjusted for clarity and consistency.

Page 4-52

1. TS 4.9.2 is deleted from this page consistent with the incorporation of these requirements into the new TS 3.4.1.1.a(4), as described above along with the other changes to page 3-25.

2. Editorial changes on this page are as follows:
   a. The Heading for Specification 4.9 is revised to reflect the acronym "DHR" for the decay heat removal function.
   b. The objective is revised to reflect the use of the acronym "DHR" for "decay heat removal."
   c. TS 4.9.1 is revised to read "RCS temperature greater than 250 degrees F" consistent with the wording of the LCOs, TS 3.4.1 and 3.4.2.
   d. TS 4.9.1 is revised to spell out the word "degrees" in place of the degree symbol.
   e. TS 4.9.1 is revised to define and reflect the use of the acronym "RCS" for the "Reactor Coolant System."
   f. TS 4.9.1.1 is revised to define the acronym "EFW" for "Emergency Feedwater."
   g. In TS 4.9.1.3 and 4.9.1.5, a hyphen is added where missing from the terms "motor-driven" and "turbine-driven."
   h. TS 4.9.1.4 is revised to capitalize the first letter in the word "Pump" referring to an "EFW Pump."
   i. TS 4.9.1.5 is revised to capitalize all the letters in the words representing operating conditions defined in Chapter 1 of the TS (e.g., STARTUP, REFUELING SHUTDOWN, and COLD SHUTDOWN), consistent with the convention of the TS. Additionally, the article "a" is not needed and is deleted.
   j. TS 4.9.1.5 is revised to reflect the use of the acronym "CSTs" for the "condensate storage tanks."
   k. In TS 4.9.1.5 is revised to capitalize the first letter of the word "pumps" referring to the EFW Pumps.
   l. TS 4.9.1.3 and TS 4.9.1.5 are revised to define and reflect the use of the acronym "CSTs" for the "Condensate Storage Tanks."
   m. TS 4.9.1.6 on the next page is moved to the bottom this page.

Page 4-52a

1. Editorial changes on this page are as follows:
   a. A section heading is added for clarity to show that this page is a continuation of section 4.9, "Decay Heat Removal (DHR) Capability - Periodic Testing."
   b. TS 4.9.1.6 is moved up to the bottom of the previous page.
   c. TS 4.9.2 is revised to read "RCS temperature less than or equal to 250 degrees F" consistent with the wording in the LCOs, TS 3.4.1 and TS 3.4.2.
   d. TS 4.9.2 is revised to spell out the word "degrees" in place of the degree symbol.
   e. TS 4.9.2.1 is revised to reflect the use of the acronym "DHR" for "Decay Heat Removal."

f. TS 4.9.2.1 is revised to capitalize the first letter in the word "Specification" in referring to TS 3.4.2
g. In the asterisk below TS 4.9.2.1, the word "Specifications" is added referring to Specifications 4.5.2.2 and 4.5.4.
h. In the first paragraph of the Bases, the first letter in the word "pump" is capitalized in three locations consistent with the convention of the TS.
i. The second paragraph of the Bases is revised to utilize the acronym "DHR" for "Decay Heat Removal."

III. Safety Evaluation Justifying the Change

A. Background

The EFW system function can be described briefly as a heat removal mechanism (including removal of reactor coolant pump energy, as well as decay heat and sensible heat) to support safe shutdown of the reactor (Reference 1). The basic physical layout from the normal water source to the EFW pumps and to the OTSGs is shown in Figure 1. The EFW System operates under transient conditions only (Reference 2). During transients, most of the steam from the OTSGs is directed to the Main Condenser (through the Turbine Bypass Valves) or to the atmosphere (by the Main Steam Safety Valves or the Atmospheric Dump Valves).

The EFW System upgrades required by NUREG-0737 were completed and accepted by the NRC in the mid-1980's (References 1 and 8). There have been no hardware changes affecting EFW flow since then. The results from Inservice Testing (IST) flow test of the EFW Pumps show no significant degradation since initial startup testing. However, two significant hydraulic modifications that were part of the EFW System upgrades resulted in some reduction in EFW flow capability; 1) installation of cavitating venturis in the common piping to each Once Through Steam Generators (OTSGs) and 2) operation with the EFW Pumps recirculation lines locked open. The primary purpose of this LCA is to clarify the TS requirements and Bases with respect to the current EFW System design basis reflecting those hardware changes as demonstrated in a 1999 benchmarked EFW System flow analysis (Reference 3).

The revised analysis shows that two EFW Pumps and a flowpath to both OTSGs must be operable in order to deliver the required design basis flow rate. As such, the limiting conditions for operation (LCO) must ensure that implementation of TS 3.4.1.1 maintains at least two EFW pumps and one operable flowpath to each OTSG. This LCA also clarifies the concept of EFW flowpath redundancy, as described in the revised Bases, for those portions of the EFW flowpath between the pumps and each OTSG that contain active components. This concept of a flowpath is similar to the flowpath definition that was deleted from the TS in License Amendment No.124 (Reference 8).

Amendment No. 124 incorporated the EFW long term upgrades required by NUREG-0737, Item II.E.1, including the safety grade Heat Sink Protection System (HSPS) for automatic initiation of EFW and OTSG water level control. One of the EFW long-term upgrades added a redundant EFW flowpath in the line to each OTSG. As such, each OTSG has two redundant flowpaths. Each redundant flowpath to an OTSG includes an automatic control valve and a

manual isolation valve. OTSG "A" has two flowpaths using EF-V-30A and EF-V-52A (Path A) or EF-V-30D and EF-V-52D (Path D). OTSG "B" has two flowpaths using EF-V-30B and EF-V-52B (Path B) or EF-V-30C and EF-V-52C (Path C). To accommodate the revised definition of an EFW flowpath and apply the concept of flowpath redundancy to the EFW LCOs, conforming changes are needed to the EFW System requirements throughout the TS for consistency and clarity.

B. Revised Limiting Conditions for Operation (LCO) for Decay Heat Removal Capability Regarding Emergency Feedwater (EFW) System Operability

Specification 3.4.1.1 is revised to modify and clarify the Limiting Conditions for Operation (LCO) regarding the operability requirements for EFW pumps and flowpaths. These changes do not result in any change to the configuration of the EFW System as described in the SAR (Reference 5) or used in plant specific analyses (References 3 and 6). Changes to each of the sections are discussed as follows:

1. TS 3.4.1.1.a

A new requirement is added to this section to include the requirement that both main steam supply paths to the turbine-driven EFW Pump must be operable, comparable to Standard Technical Specification (STS) 3.7.5 (Reference 8). Only one steam supply path is required for full capacity operation of the turbine-driven pump. However, safe operation of the plant has been analyzed assuming that both steam supply paths are available. As permitted by the current TS, the turbine-driven EFW pump could be unavailable in scenarios when one OTSG has failed due to an accident and the redundant steam supply is not operable. A worst case single failure could subsequently result in the loss of one of the two remaining motor-driven EFW Pumps and the remaining complement of EFW equipment would not be able to provide design basis accident flowrates. In accordance with this change, the turbine-driven EFW Pump would be available promptly to ensure the capability of delivering design basis accident flowrates in the event of a worst case single failure.

A 7-day allowed action time is applied commensurate with the safety significance of having a redundant motive source inoperable to the turbine-driven EFW pump. This time period is consistent with that provided by the STS.

The new LCO is added as 3.4.1.1.a(1) and consequently, the subparagraphs of 3.4.1.1.a are being renumbered. However, the following discussion addresses the current paragraph numbers unless stated otherwise.

1. TS 3.4.1.1.a(1)

The current TS 3.4.1.1.a(1) is being revised to permit operation for up to 72 hours with any EFW flowpath and no more than one of the redundant flowpaths to each OTSG inoperable. EFW System operation with one pump inoperable and up to one redundant flowpath to each OTSG inoperable will assure design EFW flow rates are achieved. The remaining complement of operable equipment has been evaluated as capable of delivering the design flow rates, although the system would not be able to withstand the most limiting single failures.

The revised specification is consistent with Heat Sink Protection System (HSPS) operability requirements of TS 3.5.1.9, which permits one HSPS actuation logic train to be inoperable for up to 72 hours. When one HSPS actuation logic train is inoperable, two EFW flowpaths (one to each OTSG) are made inoperable.

The 72 hour completion time is reasonable based on maintaining EFW design flow rates, the time needed for repairs, and the low probability of a Design Basis Accident (DBA) with a consequential worst case single failure occurring during this period.

2. TS 3.4.1.1.a(2)

This section is being revised such that TS 3.4.1.1.a(2) does not apply for the condition where two flowpaths to the same OTSG are inoperable. If one of the OTSGs has no operable flowpath, the EFW System can not supply the design flow rate and a plant shutdown is required.

The revised TS 3.4.1.1.a(3) ensures prompt action will be initiated to begin a plant shutdown when the design flow rate from the EFW system cannot be met. Therefore, these changes improve the LCO surveillance provisions, requiring prompt shutdown of the facility when less than design flow rates are expected.

3. The note following TS 3.4.1.1.a(2)

Allowing both flowpaths to a single OTSG to be inoperable is necessary to accomplish TS required surveillances. The "note" following TS 3.4.1.1.a(2) is being combined with TS 4.9.1.2 into a new TS 3.4.1.1.a(4), to define the EFW System operability requirements for EFW pumps and flowpaths during required surveillance testing and clarifies these provisions with respect to the revised definition of an EFW flowpath. The intent of these two sections is retained. The new TS 3.4.1.1.a(4) incorporates the current TS 4.9.1.2 by moving the EFW flowpath operability requirements for surveillance testing from TS Chapter 4 into Chapter 3 to permit isolation of EFW flowpaths for limited periods necessary to implement TS surveillance requirements.

The purpose of the "note" following TS 3.4.1.1.a(2) of the current TS was to permit delay of entry into TS 3.4.1.1.a(2) for 8 hours to perform the required TS surveillance testing. The new section 3.4.1.1.a(4) also applies the 8 hour allowable outage time for flowpath inoperability during testing like the current provisions of the "Note" following TS 3.4.1.1.a(2) for pump inoperability during testing.

The requirement to maintain one motor-driven EFW Pump operable during surveillance testing is preserved. Reliance upon one motor-driven EFW pump during surveillance testing is acceptable since minor and prompt operator action can restore operability to at least one other of the remaining EFW pumps. Licensing basis evaluations, which credit a fully qualified motor-driven pump as the EFW source, have shown that one EFW pump provides sufficient EFW flow during a Loss of Feedwater (LOFW) and limited size Small Break Loss of Coolant Accidents (SBLOCA) to prevent core damage (Reference 4).

The new section provides minimum pump and flowpath operability requirements along with compensatory action requirements for isolating an OTSG previously required by TS 4.9.1.2 during surveillance testing. The new TS 3.4.1.1.a(4) maintains the requirements of the current TS 4.9.1.2 for compensatory actions during surveillance testing in that a qualified individual shall be designated to remain near the location required to realign the valves from the test mode to their operational alignment on direction from the control. Rather than "...at the affected local manual valves" the wording is changes to "near the location required to realign the affected valves from the test mode to their operational alignment..." Since the word "at" could be narrowly interpreted to mean the individual would be required to be continuously stationed so close to the valve as to be impractical, the word "near" is used in the revised wording. The revised wording, "...the location required to realign the affected valves..." extends the interpretation of the location where the individual must be stationed to include the control room for remote operation of the EF-V-30 control valves in addition to locally at the EF-V-52 manually isolation valves without compromising the assurance of prompt action to operate valves if required. Specific reference to the use of local manual valves is deleted. Since the word "dedicated" could be interpreted to mean that the qualified individual would not be permitted to perform any other function, the word "designated" is used to mean that a single qualified individual has been informed of the responsibility for realigning the affected valves upon instruction from the control room if necessary. With restoration of inoperable pump(s), full design flow rates will be achieved.

This new TS 3.4.1.1.a(4) retains the intent supporting required surveillance testing previously given by the "note" of TS 3.4.1.1.a(2) and TS 4.9.1.2. Since, unlike the other paragraphs under TS 4.9.1 which require specific testing, TS 4.9.1.2 only defines requirements affecting EFW flowpath operability during surveillance testing and it is appropriate that the current TS 4.9.1.2 be included in the LCO.

4. <u>TS 3.4.2.1</u>

There is no change to the interpretation or intent TS 3.4.2.1.c and TS 3.4.2.1.d. Although this LCA will result in a change to require the operability of both redundant EFW flowpaths to provide the EFW function above 250°F, only one of the redundant EFW flowpaths is required for the alternate means of decay heat removal to satisfy TS 3.4.2.1.c and TS 3.4.2.1.d, when RCS temperature is less than or equal to 250°F. Each EFW control and manual isolation valve set provides full flow capacity. Adequate redundancy is provided by requiring two of the four means of DHR capability as specified by TS 3.4.2. Only one control and manual isolation valve is sufficient to provide the necessary decay heat removal function.

C. Revised Specification for Accident Monitoring Instrumentation Regarding EFW Flow

This specification is being revised to require two flow indication channels to each OTSG consistent with the revised flowpath definition. The EFW System has two flow instruments on the common line between the redundant EFW flow control valves and the OTSG. The bases indicate that the intent of this specification is to reflect two flow indication channels on each of the two common discharge lines (one to each OTSG). The Accident Monitoring Instrumentation specification (TS 3.5, Table 3.5-1) currently requires two (2) flow indication channels for each EFW flowpath. Therefore, this change does not affect the meaning or interpretation of the LCO.

D. Revised Surveillance for Decay Heat Removal Capability - Periodic Testing Regarding EFW

The requirements of TS 4.9.1.2 are preserved by combining these requirements with the note following TS 3.4.1.1.a(2) of the current TS into a new TS 3.4.1.1.a(4) that defines the operability requirements for EFW Pump and flowpath operability in a single location with the LCOs in TS Chapter 3. Moving the requirements of TS 4.9.1.2 to the LCO is appropriate since it deals with operability requirements during testing; and unlike the other paragraphs in TS 4.9.1, the current TS 4.9.1.2 does not specify a requirement to perform a specific test.

The compensatory actions specified by the current TS 4.9.1.2 are preserved in the new TS 3.4.1.1.a(4) which states: "...a qualified individual, in communication with the Control Room, shall be designated to remain continuously near the location required to realign the affected valves from their test mode to their operational alignment upon instruction from the Control Room." Certain TS surveillance tests require making the redundant flowpaths to an OTSG inoperable. In these instances, having stationed a qualified individual near the location to realign affected valves will assure prompt action to restore the required flowpaths.

In conformance with the revised definition of an EFW redundant flowpath, these compensatory actions are required when more than one flowpath to a single OTSG are isolated. In moving the compensatory action to the LCO, this requirement is broadened to:

1) extend applicability to the EFW control valves (EF-V-30A/B/C/D) as well as the manual isolation valves (EF-V-52A/B/C/D),

2) extend applicability to the EFW Pumps as well valves,

3) impose the 8-hour action time to EFW flow path valves that currently applies only when testing the EFW Pumps,

4) extend applicability for EFW components to operating conditions between 250°F and the critical plant conditions, when the HSPS is not required to be operable.

The clarification that the individual be "designated" rather than "dedicated" and "near" the location of the component rather then "at" the required location ensures that the designated individual is aware of the responsibility and capable of restoring the operability of a component that is inoperable for the purposes of surveillance testing in the event that EFW initiation were

required. Therefore, the intent of TS 4.9.1.2 is preserved in TS 3.4.1.1.a(4) and deletion of this paragraph from Chapter 4 is justified.

E. Editorial Changes

The editorial changes included with this LCA are intended to improve the clarity, consistency, and readability of the TS. These changes do not affect equipment configuration or operation and do not affect the meaning or interpretation of any TS LCO or surveillance requirement.

IV. No Significant Hazards Consideration

A. Operation of the facility in accordance with the proposed amendment will not involve a significant increase in the probability or consequences of an accident previously evaluated.

This change incorporates the concept of EFW flowpath redundancy throughout the TS, which takes into consideration the redundancy provided by the EFW System modifications made in the mid-1980s after the accident at TMI-2. This change incorporates a 72 hour required action time when redundant components are made inoperable. These changes do not result in any change to the configuration of the EFW System as described in the SAR or used in plant specific analyses. The reliability of EFW System components is unaffected. The 72 hour required action time for inoperability of redundant EFW components ensures that the EFW System can fulfill its safety function to provide adequate OTSG cooling during a design basis accident (DBA). The one hour required action time ensures prompt action to initiate a plant shutdown when the design flow capability of the EFW system cannot be assured.

The current TS 4.9.1.2 contains EFW flowpath operability requirements during surveillance testing rather than requiring that a specific test be performed as do the other subparagraphs of TS 4.9.1. For this reason the requirements of TS 4.9.1.2 are being moved to the LCO section in Chapter 3 and combined with the note following the current TS 3.4.1.1.a(2) into a new TS 3.4.1.1.a(4) to define the EFW System operability requirements for EFW pumps and flowpaths during surveillance testing. The new specification incorporates the consideration of EFW flowpath redundancy consistent with HSPS train operability requirements and continues to require that compensatory measures be implemented to promptly restore components if EFW is needed during surveillance testing when more than one flowpath is made inoperable to an OTSG. The intent of this surveillance standard has been retained, which assures that the minimum number of EFW flowpaths to the OTSGs will be available with minimal operator action.

This change provides further assurance that EFW System design basis requirements will be met and does not affect EFW System configuration, setpoints, or reliability. These changes will not affect any accident initiation sequence and do not affect off site dose consequences of accidents that have been analyzed.

The editorial changes included in this LCA are intended to improve the clarity, consistency, and readability of the TS, do not change the intent or interpretation.

Therefore, operation of the facility in accordance with the changes included in LCA-286 will not involve a significant increase in the probability or consequences of an accident previously evaluated

B. Operation of the facility in accordance with the proposed amendment will not create the possibility of a new or different kind of accident from any accident previously evaluated.

As a result of this change, no additional hardware is being added; and there will be no effect on EFW System design, operation as described in the SAR, or assumptions used in plant specific analyses. The requirement for three EFW Pumps and flowpaths to be operable for continuous plant operation is not affected by this change. Events involving the EFW System operation have been reviewed and determined to have no impact from these changes. The additional operability requirements for the turbine-driven EFW Pump steam supplies, the revised LCOs, and changes to define EFW flowpath redundancy ensures minimum EFW component operability as credited in plant analyses. The editorial changes included in this LCA are intended to improve the clarity, consistency, and readability of the TS and Bases, do not change the intent or interpretation.

Therefore, operation of the facility in accordance with the changes included with LCA-286 will not create the possibility of a new or different kind of accident from any accident previously evaluated.

C. Operation of the facility in accordance with the proposed amendment will not involve a significant reduction in a margin of safety.

This change does not affect the EFW System design or instrumentation setpoints. The requirement for three operable EFW pumps and associated flowpaths is not affected by this change. The revised LCO imposes a 72 hour required action time when any EFW pump or redundant flowpath to either OTSG is inoperable, including inoperability for the purpose of conducting surveillance testing. The revised LCO requires that at least one flowpath to each OTSG must be operable or a plant shutdown is required to be initiated within one hour. The 8 hour action time currently allowed for pump inoperability during surveillance testing is also applied to flowpath inoperability during testing. The revised LCO continues to require compensatory measures during EFW testing when HSPS is required to be operable and an OTSG is isolated, retaining the provision that EFW flowpath valves can be realigned promptly from their test mode to their operational alignment if EFW flow is needed. The revised Accident Monitoring Instrumentation specification is needed to reflect the revised flowpath definition and does not change the intent of the specification. The editorial changes included in this LCA are intended to improve the clarity, consistency, and readability of the TS, do not change the intent or interpretation.

Therefore, operation in accordance with the changes included in LCA-286 will not involve a significant reduction in a margin of safety.

V. Environmental Impact Evaluation

10 CFR51.22(c)(9) provides criteria for identification of licensing and regulatory actions eligible for categorical exclusion from performing an environmental assessment. A proposed amendment to an operating license for a facility requires no environmental assessment if operation of the facility in accordance with the proposed amendment would not:

(i) involve a significant hazards consideration,

(ii) result in a significant change in the types or significant increase in the amounts of any effluents that may be released offsite, and

(iii) result in a significant increase in individual or cumulative occupational radiation exposure.

AmerGen has reviewed this LCA and concludes that it meets the eligibility criteria for categorical exclusion set forth in 10 CFR 51.22(c)(9). Pursuant to 10 CFR 51.22(c), no environmental impact statement or environmental assessment needs to be prepared in connection with the issuance of the proposed license amendment.

VI. Implementation

AmerGen requests that the amendment authorizing this change be effective immediately, with implementation within 30 days.

VII. References

1. NRC Safety Evaluation, relating to NUREG-0737, Item II.E.1.2, Emergency Feedwater Review, dated February 18, 1987.
2. Updated Final Safety Analysis Report, Section 10.6, Update 15.
3. Calculation C-1101-424-E540-065, Revision 2, dated August 1999, "TMI-1 IST Acceptance Criteria for EFW Pumps."
4. GPU Nuclear Letter (1920-99-20573), Langenbach to NRC, dated November 12, 1999, "Generic Letter 81-14 Supplemental Response – Emergency Feedwater System Evaluation for Loss of Feedwater or Small Break Loss-of-Coolant Accident Following a Seismic Event."
5. Updated Final Safety Analysis Report, Chapter 14, Update 15.
6. NRC letter (1920-99-30468), Colburn to Langenbach, dated August 19, 1999, "TMI-1 License Amendment No. 214."

7. NUREG-1430, "Standard Technical Specifications Babcock and Wilcox Plants," Revision 1, dated April 7, 1995.

8. NRC letter (5211-87-3051), Thoma to Hukill, dated March 9, 1987, "Amendment No. 124 to Facility Operating License No. DPR-50."

Figure 1

TMI Unit 1 EMERGENCY FEEDWATER (EFW) SYSTEM

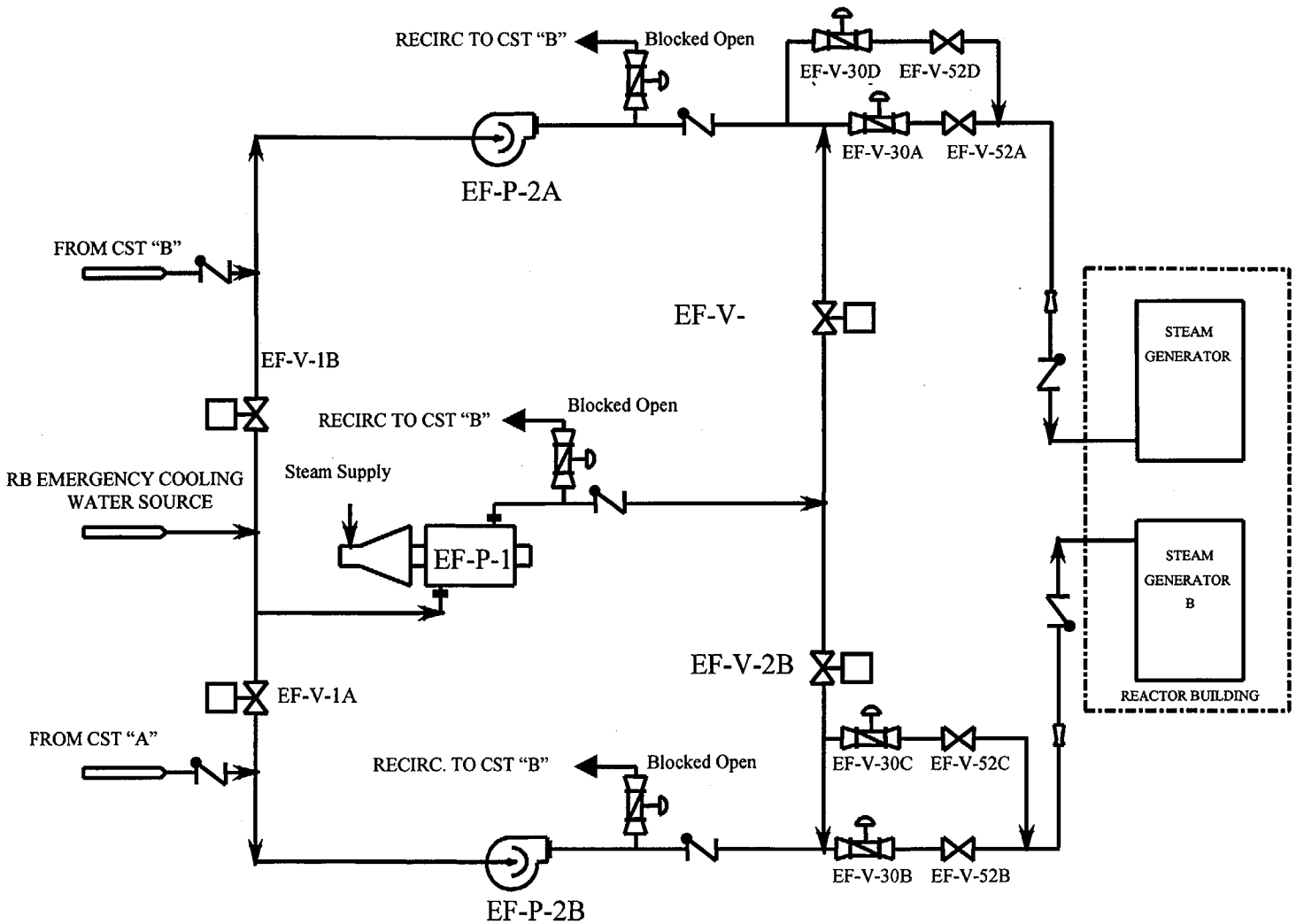

Enclosure 2

Hand Markup of the Current TMI Unit 1 Technical Specifications Pages
for License Change Application No. 286

CONTROLLED COPY

3.4 DECAY HEAT REMOVAL CAPABILITY (DHR)

Applicability

Applies to the operating status of systems and components that function to remove decay heat when one or more fuel bundles are located in the reactor vessel.

Objective

To define the conditions necessary to assure continuous capability of ~~decay heat removal~~ DHR.*

Specification

3.4.1 Reactor Coolant System (RCS) temperature greater than 250 degrees F.

3.4.1.1 ~~With the Reactor Coolant System temperature greater than 250 °F,~~ three independent Emergency Feedwater (EFW) pumps and ~~associated~~ two redundant flow paths to each Once Through Steam Generator (OTSG) shall be OPERABLE ** with:

a. Two EFW pumps, each capable of being powered from an OPERABLE emergency bus, and one EFW pump capable of being powered from ~~an~~ two OPERABLE main steam supply ~~system.~~ paths

See insert next page for the revised subsections of 3.4.1.1.a (1) through (4)

(1) With one pump or flow path inoperable, restore the inoperable pump or flow path to OPERABLE status within 72 hours or be in COLD SHUTDOWN within the next 12 hours.

(2) With more than one EFW pump or flow path inoperable, restore the inoperable pumps or flow paths to OPERABLE status within one hour or be in HOT SHUTDOWN within the next 6 hours, and in COLD SHUTDOWN within the following 12 hours.

NOTE: When EF-P-1 and EF-P-2A or EF-P-2B become inoperable due to TS surveillance, entry into this LCO may be delayed for up to 8 hours.

Page break here

b. Four of six turbine bypass valves (TBVs) OPERABLE. With more than two ~~turbine bypass valves~~ TBVs inoperable, restore operability of at least four ~~turbine bypass valves~~ TBVs within 72 hours.

c. The condensate storage tanks (CSTs) OPERABLE with a minimum of 150,000 gallons of condensate available in each CST.

(1) With a CST inoperable, restore the CST to operability within 72 hours or be in ~~at least~~ HOT SHUTDOWN within the next 6 hours, and COLD SHUTDOWN within the next 30 hours.

(2) With more than one CST inoperable, restore ~~the inoperable~~ at least one CST to OPERABLE status or be subcritical within 1 hour, in ~~at least~~ HOT SHUTDOWN within the next 6 hours, and in COLD SHUTDOWN within the following 6 hours.

---

* These requirements supplement the requirements of ~~Sections~~ Specifications 3.1.1.1.c, 3.1.1.2, 3.3.1 and 3.8.3.

** HSPS operability is specified in ~~Section~~ Specification 3.5.1. When HSPS is not required to be OPERABLE, EFW is OPERABLE by manual control of pumps and valves from the Control Room.

INSERT to Page 3-25
(of the hand markup)

(1) **With one main steam supply path inoperable, restore the inoperable steam supply path to OPERABLE status within 7 days or be in COLD SHUTDOWN within the next 12 hours.**

(2) With one **EFW** Pump or **any EFW flowpath** inoperable, restore the inoperable pump or **flowpath** to OPERABLE status within 72 hours or be in COLD SHUTDOWN within the next 12 hours.

(3) With more than one EFW Pump or **both flowpaths to either OTSG** inoperable, **except as provided for in Specification 3.4.1.1.a(4), have at least two EFW Pumps and one flowpath to each OTSG** OPERABLE within one hour or be in HOT SHUTDOWN within the next 6 hours, and in COLD SHUTDOWN within the following 12 hours.

(4) **While performing surveillance testing, more than one EFW Pump or both flowpaths to a single OTSG may be inoperable** for up to 8 hours **provided that:**

   (a) **At least one motor-driven EFW Pump shall remain OPERABLE.**

   (b) **With the reactor in STARTUP, HOT STANDBY, or POWER OPERATION, a qualified individual, in communication with the control room, shall be designated to remain continuously near the location required to realign the affected valves from the test mode to their operational alignment upon instruction from the Control Room.**

   Otherwise, be in HOT SHUTDOWN within the next 6 hours, and in COLD SHUTDOWN within the following 12 hours.

CONTROLLED COPY

3.4.1.2.1 With the Reactor ~~from~~ between 250 degrees F ~~to~~ and HOT SHUTDOWN, and having been subcritical for at least one (1) hour, two (2) Main Steam Safety Valves (MSSVs) per ~~Steam Generator~~ OTSG shall be OPERABLE. With less than two (2) ~~Main Steam Safety Valves~~ MSSVs per ~~Steam Generator~~ OTSG OPERABLE, restore at least two (2) MSSVs ~~Valves~~ to OPERABLE status for each ~~Steam Generator~~ OTSG within 6 hours or be in COLD SHUTDOWN within the following 30 hours.

3.4.1.2.2 With the Reactor between ~~from~~ HOT SHUTDOWN ~~to~~ and 5% power, and having been subcritical for at least one (1) hour, two (2) ~~Main Steam Safety Valves~~ MSSVs per ~~Steam Generator~~ OTSG shall be OPERABLE provided the overpower ~~power~~ trip setpoint in the RPS is set to less than 5% full power. With less than two (2) ~~Main Steam Safety Valves~~ MSSVs per ~~Steam Generator~~ OTSG OPERABLE, restore at least two (2) MSSVs ~~Valves~~ to OPERABLE status for each ~~Steam Generator~~ OTSG within 6 hours or be in COLD SHUTDOWN within the following 30 hours.

3.4.1.2.3 Except as provided in ~~T.S.~~ Specification 3.4.1.2.2 above, when the Reactor is above HOT SHUTDOWN, all eighteen (18) ~~Main Steam Safety Valves~~ MSSVs shall be OPERABLE or, if any are not OPERABLE, the maximum overpower trip setpoint (see Table 2.3-1) shall be reset as follows:

Maximum Number of ~~Safety Valves~~ MSSVs Disabled on Any ~~Steam Generator~~ OTSG	Maximum Overpower Trip Setpoint (% of Rated Power)
1	92.4
2	79.4
3	66.3

With more than three (3) ~~Main Steam Safety Valves~~ MSSVs ~~INOPERABLE~~, restore at least fifteen (15) ~~Main Steam Safety Valves~~ MSSVs to OPERABLE status within 4 hours or be in ~~at least~~ HOT SHUTDOWN within the next 6 hours.

Page break here

3.4.2 ~~Reactor Coolant System~~ RCS temperature less than or equal to 250 degrees F ~~or less~~.

3.4.2.1 ~~With Reactor Coolant temperature 250°F or less,~~ at least two of the following means for maintaining ~~decay heat removal~~ DHR capability shall be OPERABLE and at least one shall be in operation except as allowed by Specifications 3.4.2.2, 3.4.2.3 and 3.4.2.4.

a. ~~Decay Heat Removal~~ DHR String (Loop) "A"

b. ~~Decay Heat Removal~~ DHR String (Loop) "B"

c. ~~Reactor Coolant~~ RCS Loop "A" and its associated OTSG ~~and its~~ with an ~~associated emergency feedwater~~ EFW pump and a flowpath.

d. ~~Reactor Coolant~~ RCS Loop "B" and its associated OTSG ~~and its~~ with an ~~associated emergency feedwater~~ EFW pump and a flowpath.

Place the action statement in T.S. 3.4.2.5 here

CONTROLLED COPY

3.4 DECAY HEAT REMOVAL (DHR) CAPABILITY (Continued)

3.4.2.2 Operation of the means for ~~decay heat removal~~ DHR may be suspended provided the core outlet temperature is maintained below saturation temperature.

3.4.2.3 The number of means for ~~decay heat removal~~ DHR required to be ~~operable~~ per Specification 3.4.2.1 may be reduced to one provided that the Reactor is in a ~~Refueling Shutdown~~ condition with the Fuel Transfer Canal water level greater than or equal to 23 feet above the reactor vessel flange.

3.4.2.4 Specification 3.4.2.1 does not apply when either of the following conditions exist:

a. Decay heat generation is less than 188 KW with the RCS full.

b. Decay heat generation is less than 100 KW with the RCS drained down for maintenance.

Move up to the end of T.S. 3.4.2.1

~~3.4.2.5~~ With less than the above required ~~loops~~ means for maintaing DHR capability OPERABLE, immediately initiate corrective action to return the required loops to OPERABLE status as soon as possible.

Begin Bases here

Amendment No. ~~119, 125, 133,~~ 220

CONTROLLED COPY

Move up to previous Page

Bases (Continued)

Bases

A reactor shutdown following power operation requires removal of core decay heat. Normal ~~decay heat removal~~ DHR is by the ~~steam generators~~ OTSGs with the steam dump to the condenser when RCS temperature is above 250°F degrees and by the ~~decay heat removal~~ DHR system below 250°F degrees. Core decay heat can be continuously dissipated up to 15 percent of full power via the steam bypass to the condenser as feedwater in the ~~steam generator~~ OTSG is converted to steam by heat absorption. Normally, the capability to return feedwater flow to the ~~steam generators~~ OTSGs is provided by the main feedwater system.

See insert next Page

The ~~main steam safety valves~~ MSSVs will be able to relieve to atmosphere the total steam flow if necessary. Below 5% power, only a minimum number of ~~Main Steam Safety Valves~~ MSSVs need to be operable as stated in ~~Technical~~ Specifications 3.4.1.2.1 and 3.4.1.2.2. This is to provide ~~Steam Generator~~ OTSG overpressure protection during hot functional testing and low power physics testing. Additionally, when the Reactor is between hot shutdown and 5% full power operation, the over power trip setpoint in the RPS shall be set to less than 5% as is specified in ~~Technical~~ Specification 3.4.1.2.2. The minimum number of ~~Valves~~ MSSVs required to be operable allows margin for testing without jeopardizing plant safety. Plant specific analysis shows that one ~~Main Steam Safety Valve~~ MSSV is sufficient to relieve reactor coolant pump heat and stored energy when the reactor ~~is~~ has been subcritical by 1% delta K/K for at least one hour. Other plant analyses show that two (2) ~~Main Steam Safety Valves~~ MSSVs on either OTSG are more than sufficient to relieve reactor coolant pump heat and stored energy when the reactor is below 5% full power operation but had been subcritical by 1% delta K/K for at least one hour ~~since~~ subsequent to power operation above 5% full power. According to ~~Technical~~ Specification 3.1.1.2a, both ~~steam generators~~ OTSGs shall be operable whenever the reactor coolant average temperature is above 250°F degrees. This assures that all four (4) ~~Main Steam Safety Valves~~ MSSVs are available for redundancy. During power operations at 5% full power or above, if ~~Main Steam Safety Valves~~ MSSVs are inoperable, the power level must be reduced, as stated in ~~Technical~~ Specification 3.4.1.2.3 such that the remaining ~~safety valves~~ MSSVs can prevent overpressure on a turbine trip.

Page Break here

~~In the unlikely event of complete loss of off-site electrical power to the station, decay heat removal is by either the steam-driven emergency feedwater pump, or two half-sized motor-driven pumps. Steam discharge is to the atmosphere via the Main Steam Safety Valves and controlled atmospheric relief valves, and in the case of the turbine driven pump, from the turbine exhaust.~~

~~Both motor-driven pumps, or the steam-driven EFW pump are required initially to remove decay heat with one EFW pump eventually sufficing. If emergency feedwater is required during surveillance testing, acceptably minor operator action may be required to ensure both motor-driven pumps are available. The minimum amount of water in the condensate storage tanks, contained in Technical Specification 3.4.1.1c, will allow cooldown to 250°F degrees with steam being discharged to the atmosphere. After cooling to 250°F degrees, the decay heat removal DHR system is used to achieve further cooling.~~

required by

provides at least 12 hours of DHR with steam being discharged to the atmosphere. This provides adequate time to align alternate water sources for RCS cooldown.

INSERT to Page 3-26b
(of the hand markup)

The Emergency Feedwater (EFW) System supplies adequate feedwater to the OTSGs at accident pressures, removing heat from the Reactor Coolant System (RCS) to support safe shutdown of the reactor when the normal feedwater supply is unavailable. EFW is not required for normal plant startup and shutdown.

Page break Here→

The turbine-driven EFW Pump and two motor-driven EFW Pumps take suction from the Condensate Storage Tanks (CSTs) and deliver flow to a common discharge header. Flowpath redundancy is provided for those portions of the EFW flowpath containing active components between the pumps and each of the OTSGs. Each EFW line to an OTSG includes two redundant flowpaths, each equipped with an automatic control valve (EF-V-30A/B/C/D) and a manual isolation valve (EF-V-52A/B/C/D). Each redundant flowpath is capable of providing adequate flow to the associated OTSG. Heat removed from the OTSGs returns to the Main Condenser through the Turbine Bypass Valves (TBVs) or discharges to the atmosphere through the Main Steam Safety Valves (MSSVs) and/or the Atmospheric Dump Valves (ADVs). An unlimited supply of river water to the EFW Pumps is available using either of the two Reactor Building Emergency Cooling Water (Reactor River Water) Pumps (RR-P-1A/B).

Redundant main steam supply paths are provided to the turbine-driven EFW Pump for certain events involving loss of one steam supply (e.g., main steam and feedwater line breaks). An operable Main Steam supply path delivers steam to the turbine-driven EFW Pump upon HSPS actuation or by operator action from the control room when HSPS is not required. During low pressure conditions, additional steam supply paths from Main Steam (MS-V-10A/B) or Auxiliary Steam can be made available to the turbine-driven EFW Pump as necessary.

During design basis events the EFW System can withstand any single active failure and still perform its function. The limiting design basis accident for the EFW System is a loss of feedwater event with off-site power available. In the event of a loss of all AC power, which assumes multiple single failures, the turbine-driven EFW Pump alone delivers the necessary EFW flow. Consideration of additional failures in the EFW System or Heat Sink Protection System (HSPS) is not required for this event. Additionally, the EFW System capabilities are sufficient to deliver the required flow in licensing basis events (e.g., ATWS failure to trip events, Generic Letter 81-14 seismic events, and the Station Blackout event).

The most limiting EFW flow requirement is met when at least two EFW Pumps are operable and at least one EFW flowpath to each OTSG is operable. When three pumps and two flowpaths to each OTSG are operable, the EFW System can withstand any single active failure. Examples of single active failures include: failure of any one EFW Pump to actuate, failure of one HSPS train to actuate, or failure of one redundant flowpath to either OTSG. Initially after a shutdown, any two EFW Pumps are required to remove RCS heat with one pump eventually sufficing as the decay heat production rate diminishes.

If EFW were required during surveillance testing, minor operator action (e.g., opening a local isolation valve or manipulating a control switch from the control room) may be needed to restore operability of the required pumps or flowpaths.

The allowed action times are reasonable, based on operating experience, to reach the required plant operating conditions from full power in an orderly manner and without challenging plant systems.

The EFW system actuates on: 1) loss of all four Reactor Coolant Pumps, 2) loss of both Main Feedwater Pumps, 3) low OTSG water level, or 4) high Reactor Building pressure. A single active failure in the HSPS will neither inadvertently initiate the EFW system nor isolate the Main Feedwater system. OTSG water level is controlled automatically by the HSPS system or can be controlled manually, if necessary.

move up to previous page

3.4 DECAY HEAT REMOVAL CAPABILITY (Continued)

Bases (Continued)

temperature degrees specification Specifications DHR Loop degrees (Loop)

When the RCS is below 250°F, a single DHR string, or single OTSG ~~and its associated emergency feedwater~~ with an EFW Pump and a flowpath capable of supporting natural circulation is sufficient to provide removal of decay heat at all times following the cooldown to 250°F. The ~~Decay Heat Removal~~ DHR String redundancy required by ~~TS~~ 3.4.2.1 is achieved with independent active components capable of maintaining the RCS subcooled. A single DHR flow path with redundant active components is sufficient to meet the requirements of ~~TS~~ 3.4.2.1.a and 3.4.2.1.b. The requirement to maintain two ~~OPERABLE~~ means of ~~decay heat removal~~ DHR ensures that a single active failure does not result in a complete loss of ~~decay heat removal~~ DHR capability. The requirement to keep a ~~system~~ RCS in operation as necessary to maintain the ~~system~~ subcooled at the core outlet provides the guidance to ensure that steam conditions which could inhibit core cooling do not occur.

This ¶ is being reworded and moved to the end of the 1st ¶ of the insert to page 3-26b.

With the reactor vessel head removed and 23 feet of water above the reactor vessel flange, a large heat sink is available for core cooling. In this condition, only one DHR loop is required to be operable because the volume of water above the reactor vessel flange provides a large heat sink which would allow sufficient time to recover active ~~decay heat removal~~ DHR means.

Following extensive outages or major core off-loading, the decay heat generation being removed from the Reactor Vessel is so low that ambient losses are sufficient to maintain core cooling and no other means of heat removal is required. The system is passive and requires no redundant or diverse backup system. Decay heat generation is calculated in accordance with ANSI 5.1-1979 to determine when this situation exists (Reference 4).

~~An unlimited emergency feedwater supply is available from the river via either of the two motor-driven reactor building emergency cooling water pumps for an indefinite period of time.~~

~~The requirements of Technical Specification 3.4.1.1 assure that before the reactor is heated to above 250°F, adequate auxiliary feedwater capability is available. One turbine driven pump full capacity (920 gpm) and the two half-capacity motor-driven pumps (460 gpm each) are specified. However, only one half-capacity motor-driven pump is necessary to supply auxiliary feedwater flow to the steam generators in the onset of a small break loss-of-coolant accident.~~

REFERENCES

(1) UFSAR, Table 6.1-4 - ECCS "Single Failure Analysis"

(2) UFSAR, Section 9.5 - "Decay Heat Removal System"

(3) UFSAR, Section 10.6 - "Emergency Feedwater System"

(4) TMI Unit 1 Calculation C-3220-85-001, "RCS Decay Heat Removal - Ambient Losses," Revision 0, February 28, 1985

3.5.5 ACCIDENT MONITORING INSTRUMENTATION (Continued)

The Emergency Feedwater System (EFW) is provided with two channels of flow instrumentation on each of the two discharge lines. Local flow indication is also available for the ~~emergency feedwater~~ EFW system.

Although the pressurizer has multiple level indications, the separate indications are selectable via a switch for display on a single display. Pressurizer level, however, can also be determined via the patch panel and the computer log. In addition, a second channel of pressurizer level indication is available independent of the NNI.

Although the instruments identified in Table 3.5-2 are significant in diagnosing situations which could lead to inadequate core cooling, loss of any one of the instruments in Table 3.5-2 would not prevent continued, safe, reactor operation. Therefore, operation is justified for up to 7 days (48 hours for pressurizer level). Alternate indications are available for Saturation Margin Monitors using hand calculations, the PORV/Safety Valve position monitors using discharge line thermocouple and Reactor Coolant Drain Tank indications, and for EFW flow using Steam Generator level and EFW pump discharge pressure. Pressurizer level has two channels, one channel from NNI (3 D/P instrument strings through a single indicator) and one channel independent of the NNI. Operation with the above pressurizer level channels out of service is permitted for up to 48 hours. Alternate indication would be available through the plant computer.

The operability of design basis accident monitoring instrumentation as identified in Table 3.5-3, ensures that sufficient information is available on selected plant parameters to monitor and assess the variables following an accident. (This capability is consistent with the recommendations of Regulatory Guide 1.97, "Instrumentation for Light-Water-Cooled Nuclear Power Plants to Assess Plant Conditions During and Following an Accident," Rev. 3, May 1983.) These instruments will be maintained for that purpose.

Those same instruments along with the containment hydrogen concentration monitor are useful to evaluate and predict the course of accidents which go beyond the plant design basis. This capability is consistent with the recommendations of NUREG 0737, II.F.1 and the containment hydrogen concentration monitor should be maintained for that purpose.

TABLE 3.5-2

ACCIDENT MONITORING INSTRUMENTS

FUNCTION	INSTRUMENTS	NUMBER OF CHANNELS	MINIMUM NUMBER OF CHANNELS
1	Saturation Margin Monitor	← 2	← 1
2	Safety Valve Differential Pressure Monitor	1 per discharge line	1 per discharge line
3	PORV Position Monitor	← 2	← 1*
4	Emergency Feedwater Flow	2 per ~~flow path~~ OTSG	1 per ~~flow path~~ OTSG
5	Pressurizer Level	← 2	← 1
6	Backup Incore Thermocouple Display Channel	4 thermocouples/core quadrant	2 thermocouples/core quadrant

---

* With the PORV Block Valve closed in accordance with Specification 3.1.12.4.a, the minimum number of channels is zero.

CONTROLLED COPY

CONTROLLED COPY

4.9 DECAY HEAT REMOVAL (DHR) CAPABILITY - PERIODIC TESTING

Applicability

Applies to the periodic testing of systems or components which function to remove decay heat.

Objective

To verify that systems/components required for ~~decay heat removal~~ DHR are capable of performing their design function.

Specification

4.9.1 ~~Emergency Feedwater System - Periodic Testing~~ Reactor Coolant System (RCS) Temperature greater than 250°F degrees

4.9.1.1 Verify each Emergency Feedwater (EFW) Pump is tested in accordance with the requirements and acceptance criteria of the ASME Section XI Inservice Test Program.

4.9.1.2 DELETED ~~During testing of the EFW System when the reactor is in STARTUP, HOT STANDBY or POWER OPERATION, if one steam generator flow path is made inoperable, a dedicated qualified individual who is in communication with the control room shall be continuously stationed at the affected EFW local manual valves. On instruction from the Control Room Operator, the individual shall realign the valves from the test mode to their operational alignment.~~

4.9.1.3 At least once per 31 days, each EFW System flowpath valve from both Condensate Storage Tanks (CSTs) to the OTSGs via the motor-driven pumps and the turbine-driven pump shall be verified to be in the required status.

4.9.1.4 On a refueling interval basis:

a) Verify that each EFW pump starts automatically upon receipt of an EFW test signal.

b) Verify that each EFW control valve responds upon receipt of an EFW test signal.

c) Verify that each EFW control valve responds in manual control from the control room and remote shutdown panel.

4.9.1.5 Prior to ~~startup~~, following ~~a refueling shutdown~~ or ~~a cold shutdown~~ greater than 30 days, conduct a test to demonstrate that the motor-driven EFW pumps can pump water from the ~~condensate tanks~~ CSTs to the Steam Generators.

move up section 4.9.1.6 here from the following page

move up to previous page

4.9 DECAY HEAT REMOVAL (DHR) CAPABILITY - PERIODIC TESTING (Continued)

4.9.1.6 Acceptance Criteria

These tests shall be considered satisfactory if control board indication and visual observation of the equipment demonstrates that all components have operated properly except for the tests required by Specification 4.9.1.1.

Page break here

4.9.2 ~~Decay Heat Removal Capability - Periodic Testing (Reactor Coolant System~~ RCS Temperature less than or equal to 250°F ~~or less)~~ degrees.*

4.9.2.1 On a daily basis, verify operability of the means for ~~decay heat removal~~ DHR required by Specification 3.4.2 by observation of console status indication.

* These requirements supplement the requirements of Specifications 4.5.2.2 and 4.5.4.

Bases

ASME Section XI specifies requirements and acceptance standards for the testing of nuclear safety related pumps. The quarterly EFW pump test frequency specified by the ASME Section XI Code will be sufficient to verify that the turbine-driven and both motor-driven EFW pumps are operable. Compliance with the normal acceptance criteria assures that the EFW pumps are operating as expected. The surveillance requirements ensure that the overall EFW System functional capability is maintained.

Daily verification of the operability of the required means for ~~decay heat removal~~ DHR ensures that sufficient ~~decay heat removal~~ DHR capability will be maintained.