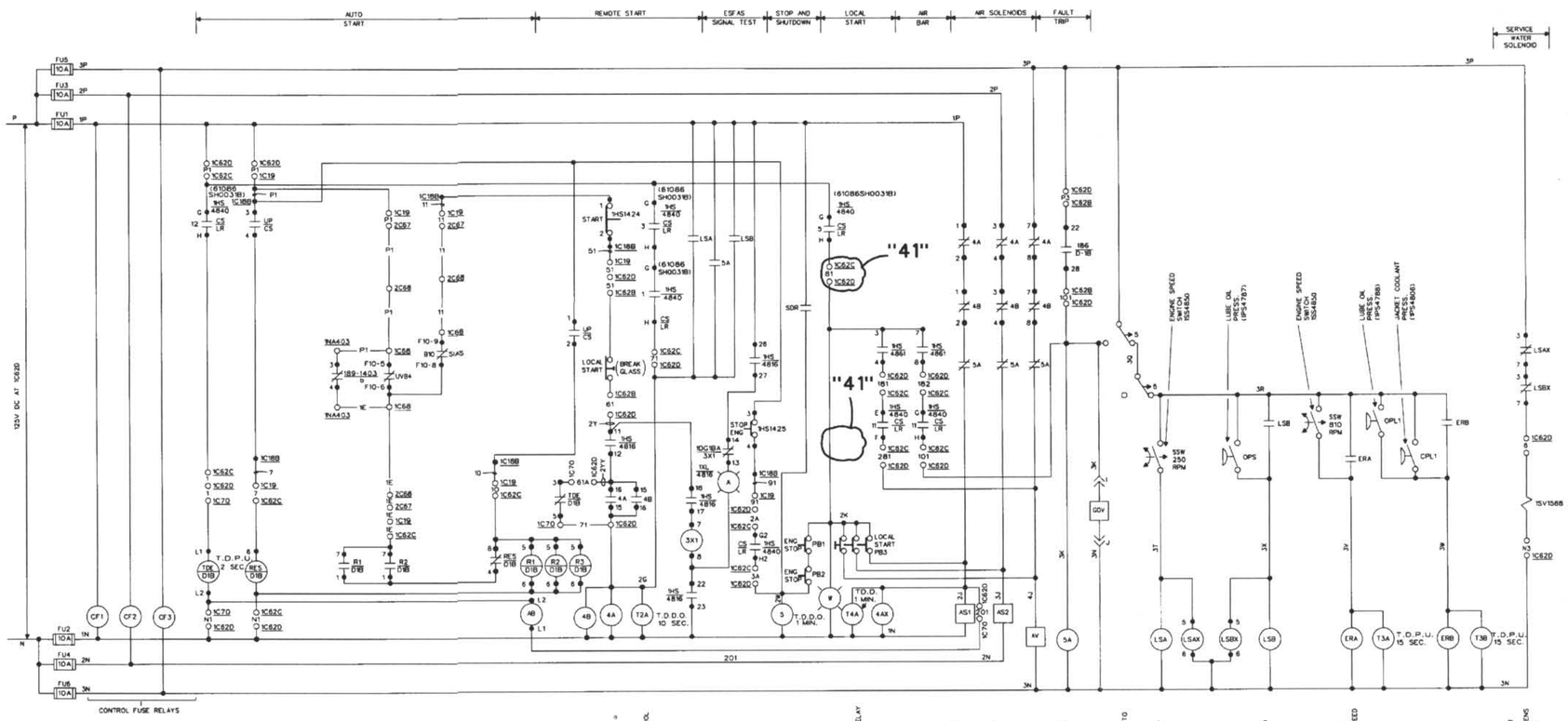

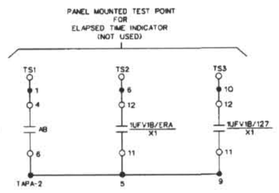

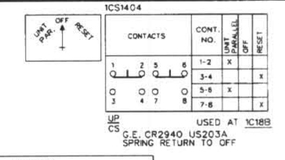

AUTO — SLOW START

1HS4826 ELECTRO SW SER. 24 VENDOR TAG NO. RS1

TITLE ENGRAVING 1HS4826

DECK	CONTACTS HANDLE END	1	2	3	4	5	6	7	8	APPLICATION
1	11–12	X								THIS DWG.
	12–13									SPARE
	15–16	X								THIS DWG.
	16–17									SPARE
2	21–22	X								THIS DWG.
	22–23									SPARE
	25–26									SPARE
	26–27									SPARE
3	31–32									SPARE
	32–33									SPARE
	35–36									SPARE
	36–37									SCH. 10G198 61086SH0031

NORM — TEST

1HS4816 ELECTRO SW SER. 24

TITLE ENGRAVING 1HS4816

DECK	CONTACTS HANDLE END	1	2	3	4	5	6	7	8	APPLICATION
1	11–12	X								THIS DWG.
	12–13									SPARE
	15–16	X								SPARE
	16–17									THIS DWG.
2	21–22	X								SPARE
	22–23	X								THIS DWG.
	25–26									SPARE
	26–27	X								THIS DWG.
3	31–32	X								SPARE
	32–33									SPARE
	35–36									SPARE
	36–37									SPARE

NORM — AIR BAR

TITLE ENGRAVING 1HS4861

DECK	CONTACTS HANDLE END	1	2	3	4	5	6	APPLICATION
1	1–2	X						SPARE
	3–4	X						THIS DWG.
	5–6							SPARE
	7–8	X						THIS DWG.

1HS4861 ELECTRO SW. TYPE 20K, PISTOL GRIP, MAINTAINED CONTACT

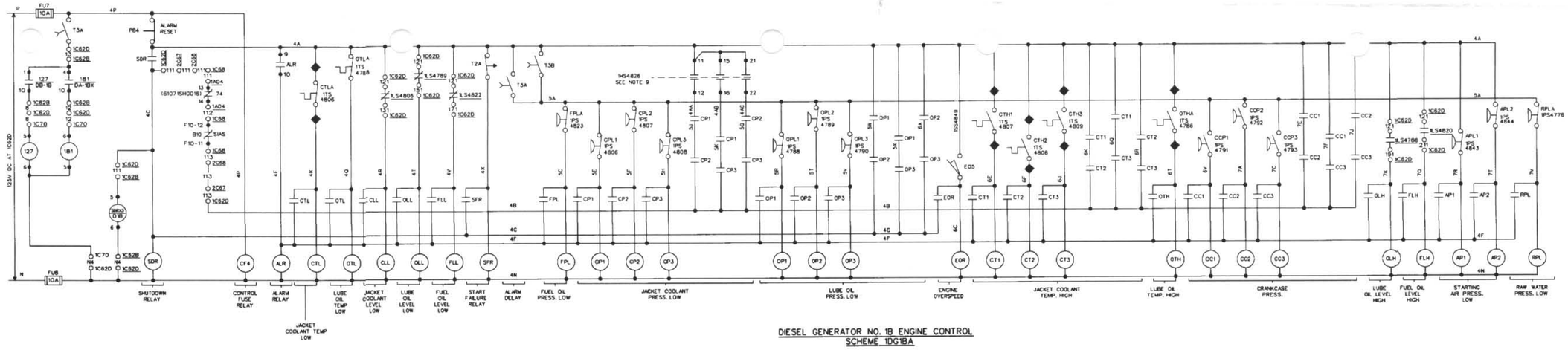

DIESEL GENERATOR NO. 1B ENGINE CONTROL
SCHEME 1DG1BA

NOTES:

1. CONTROL SWITCH CS/LR DEVELOPMENT SHOWN ON DWG 61086SH0031A
2. DISCONNECT AUX. SWITCH 189 OPENS WHEN DISCONNECT SWITCH IS CLOSED.
3. ALL ELECTRICAL EQUIP. SHOWN DE-ENERGIZED-PRESSURE & LIQUID LEVEL SWITCHES ARE SHOWN BELOW NORMAL OPERATING LEVELS-TEMPERATURE SWITCHES ARE SHOWN AT 60°F -MECHANICALLY ACTUATED SWITCHES ARE SHOWN WITH ENGINE AT NORMAL SHUTDOWN.
4. DELETED
5. THIS DRAWING INCORPORATES DRAWING 61086SH0013A AND VENDOR PRINT 6750-M-222-15 SH1 (11866028 SH1) DOC NO. (12310-0007)
6. DELETED
7. DELETED
8. BFD RELAYS MAY BE REPLACED WITH NBFD. (REF. WESTINGHOUSE TECH. BULLETIN NSB-TB-79-05)
9. VENDOR TAG RS1
10. 1DG1BA STRUTHERS DUNN CAT.#219DXBP W/#33377 3X1 SOCKET 14 PIN.
11. FOR RELAY CONTACT CONFIGURATION SEE 12310-0054SH0003

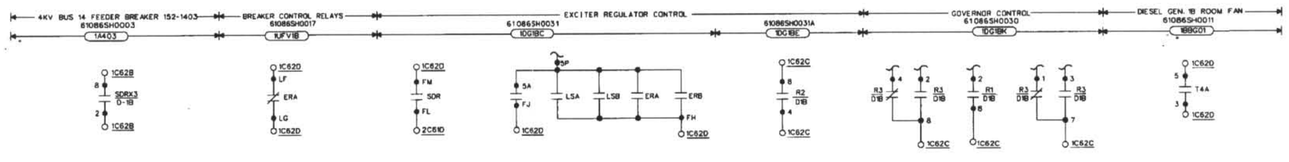

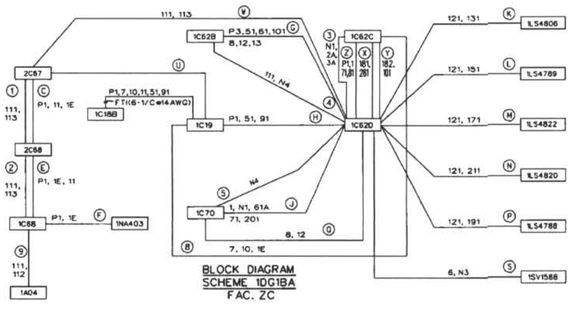

BLOCK DIAGRAM
SCHEME 1DG1BA
FAC. 2C

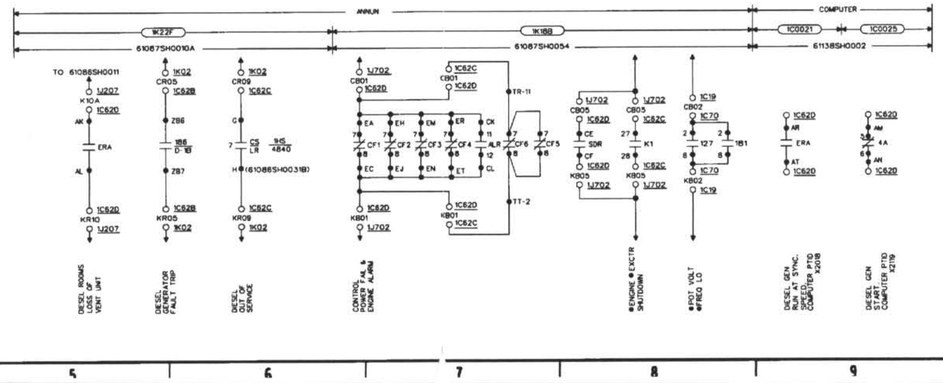

REFERENCE DRAWINGS:

82818 CWD DIESEL GEN. REL. PNLS.
61138SH0003A CONN. DIAG. 1C70
61138SH0002 CONN. DIAG. 1C62D
61086SH0016 LOCAL ANNUNCIATOR
61086SH0016A LOCAL ANNUNCIATOR

LEGEND:

◆ INDICATES EGS GRAYBOOT CONNECTORS

FOR COILS OF:	SEE DRAWING:
186/D-1B	61086SH0019A
127/DB-1B	61068SH0002
181/DA-1BX	61086SH0019A
CF5	61086SH0031
CF6	61086SH0031A
K1	61086SH0031
1UFV1B/ERA/X1	61086SH0017
1UFV1B/127/X1	61086SH0017

D-1

REV	DATE	DESCRIPTION	DWN	DSGN	BE	IR	APPROVED
36	4/27/98	AS BUILT DCN 61086SH0013-2005SH0001 ES199000862-000	MVR GPK	—	—	—	KWJ
37	9/4/98	AS BUILT INFO ONLY ES199800479-000	MPR GPK	—	—	—	KWJ
38	10/30/98	AS BUILT DCN 61086SH0013-2006SH0001 & 2 ESP 98-01B-02	MPR RWM	—	—	—	KWJ
39	11/18/98	AS BUILT INFO ONLY ES199800444-000	MPR RWM	—	—	—	KWJ
40	12/11/98	AS BUILT INFO ONLY ES199801612-000	GPK RWM	—	—	—	KWJ
41	11/1/99	AS BUILT DCN 61086SH0013-2006SH0001 & 2 ESP 98-01B-02	RWM GPK	—	—	—	KWJ

DRAWN
DESIGNED
CIVIL ENGR.
ELECT. ENGR.
I & C ENGR.
MECH. ENGR.
I.R.
APPROVED
DATE

SCHEMATIC DIAGRAM DIESEL GENERATOR NO. 1B ENGINE CONTROL

BALTIMORE GAS AND ELECTRIC COMPANY
NUCLEAR ENGINEERING DEPARTMENT

CALVERT CLIFFS UNIT 1
ELECTRIC PRODUCTION PLANT

SCALE: NONE | VENDOR DWG. NO. 1E-086SH0013 | SIZE E | CAT. 1
INTER NO. 5152.DGN | DWG. NO. 61086SH0013 | REV. 41