LICENSE AUTHORITY FILE COPY

UNITED STATES
NUCLEAR REGULATORY COMMISSION
WASHINGTON, D. C. 20555

DO NOT REMOVE

June 6, 1984

Posted
Amdt. 90
to DPR-26
— See Correction letter
of 6-20-84 (#1)
— See Correction letter
of 12/7/84 (#2)

Docket Nos. 50-3
and 50-247

Mr. John D. O'Toole
Vice President
Nuclear Engineering and Quality Assurance
Consolidated Edison Company
of New York, Inc.
4 Irving Place
New York, New York 10003

Dear Mr. O'Toole:

The Commission has issued the enclosed Amendment Nos. 32 and 90 to Facility Operating License No. DPR-5 and DPR-26 for the Indian Point Nuclear Units 1 and 2, respectively. These amendments consist of changes to the Technical Specifications (TS), Appendices A and B of each license, in response to your submittal dated February 1, 1983. This action establishes Radiological Effluent Technical Specifications (RETS) in the TS of Indian Point 1 and 2 (IP-1 and IP-2) by adding specifications to Appendix A. The RETS are incorporated into the IP-1 TS by reference to Appendix A of the IP-2 license. The former radiological specifications in Appendix B of both licenses are deleted.

Based on our evaluation, we conclude that your proposed RETS, with the correction of typographical errors as agreed upon, meet the intent of the NRC staff's model RETS for PWRs, NUREG-0472, Revision 2, February 1, 1980. To facilitate implementation of the Indian Point 2 RETS, your proposed omission of monitors on the turbine building sump effluent lines is acceptable on an interim basis. This acceptance is based on the recognition that for some older plants inaccessibility of certain effluent lines makes monitoring as recommended by the model RETS much more difficult than for recent installations, and thus a study by NRC of monitoring alternatives for these plants is required. Similarly the proposed Technical Specifications for explosive gas mixtures have been accepted on an interim basis until a final, formal policy on explosive gas monitoring has been established by the NRC.

A copy of the related Safety Evaluation (SE) and related Technical Evaluation Report (TER) are enclosed. These SE and TER only address the changes to IP-2 TS; however, they are applicable to both TS changes since the IP-1 TS reference the specifications in the IP-2 TS.

Steven A. Varga for
Roger L. Pedersen, Project Manager
Operating Reactors Branch #1
Division of Licensing

Enclosures:
1. Amendment No. 32 to DPR-5
2. Amendment No. 90 to DPR-26
3. Safety Evaluation/TER

cc: w/enclosures
See next page

Mr. John D. O'Toole
Consolidated Edison Company of New York, Inc.

cc: Mayor, Village of Buchanan
236 Tate Avenue
Buchanan, New York 10511

Joseph D. Block, Esquire
Executive Vice President
Administrative
Consolidated Edison Company
of New York, Inc.
4 Irving Place
New York, New York 10003

Robert L. Spring
Nuclear Licensing Engineer
Consolidated Edison Company
of New York, Inc.
4 Irving Place
New York, New York 10003

Ms. Ellyn Weiss
Sheldon, Harmon and Weiss
1725 I Street, N.W., Suite 506
Washington, D. C. 20006

Senior Resident Inspector
U. S. Nuclear Regulatory Commission
P.O. Box 38
Buchanan, New York 10511

Brent L. Brandenburg
Assistant General Counsel
Consolidated Edison Company
of New York, Inc.
4 Irving Place - 1822
New York, New York 10003

Regional Administrator - Region I
U. S. Nuclear Regulatory Commission
631 Park Avenue
King of Prussia, Pennsylvania 19406

Carl R. D'Alvia, Esquire
Attorney for the Village of
Buchanan, New York
395 South Riverside Avenue
Croton-on-Hudson, New York 10520

Regional Radiation Representatives
EPA Region II
26 Federal Plaza
New York, New York 10007

Director, Technical Development
Programs
State of New York Energy Office
Agency Building 2
Empire State Plaza
Albany, New York 12223

Dr. Lawrence R. Quarles
Apartment 51
Kendal at Longwood
Kennett Square, Pennsylvania 19348

Thomas J. Farrelly, Esquire
Law Department
Consolidated Edison Company
of New York, Inc.
4 Irving Place
New York, New York 10003

Mr. John D. O'Toole
Consolidated Edison Company of New York, Inc.

cc: Mr. Charles W. Jackson
Vice President, Nuclear Power
Consolidated Edison Company
of New York, Inc.
Broadway and Bleakley Avenues
Buchanan, New York 10511

Mr. M. Blatt
Director, Regulatory Affairs
Consolidated Edison Company
of New York, Inc.
Broadway and Bleakley Avenues
Buchanan, New York 10511

Mr. Frank Matra
Resident Construction Manager
Consolidated Edison Company
of New York, Inc.
Broadway and Bleakley Avenues
Buchanan, New York 10511

Ezra I. Bialik
Assistant Attorney General
Environmental Protection Bureau
New York State Department of Law
2 World Trade Center
New York, New York 10047

UNITED STATES
NUCLEAR REGULATORY COMMISSION
WASHINGTON, D. C. 20555

CONSOLIDATED EDISON COMPANY OF NEW YORK, INC.

DOCKET NO. 50-3

INDIAN POINT NUCLEAR GENERATING UNIT NO. 1

AMENDMENT TO FACILITY OPERATING LICENSE

Amendment No. 32
License No. DPR-5

1. The Nuclear Regulatory Commission (the Commission) has found that:

   A. The application for amendment by Consolidated Edison Company of New York, Inc. (the licensee) dated February 1, 1983, complies with the standards and requirements of the Atomic Energy Act of 1954, as amended (the Act) and the Commission's rules and regulations set forth in 10 CFR Chapter I;

   B. The facility will operate in conformity with the application, the provisions of the Act, and the rules and regulations of the Commission;

   C. There is reasonable assurance (i) that the activities authorized by this amendment can be conducted without endangering the health and safety of the public, and (ii) that such activities will be conducted in compliance with the Commission's regulations;

   D. The issuance of this amendment will not be inimical to the common defense and security or to the health and safety of the public; and

   E. The issuance of this amendment is in accordance with 10 CFR Part 51 of the Commission's regulations and all applicable requirements have been satisfied.

2. Accordingly, the license is amended by changes to the Technical Specifications as indicated in the attachment to this license amendment, and paragraph 2.C.(2) of Facility Operating License No. DPR-5 is hereby amended to read as follows:

(2) Technical Specifications

The Technical Specifications contained in Appendices A and B, as revised through Amendment No. 32, are hereby incorporated in the license. The licensee shall operate the facility in accordance with the Technical Specifications.

3. This license amendment is effective on issuance, to be implemented no later than July 1, 1984.

FOR THE NUCLEAR REGULATORY COMMISSION

Steven A. Varga

Steven A. Varga, Chief
Operating Reactors Branch #1
Division of Licensing

Attachment:
Changes to the Technical
Specifications

Date of Issuance: June 6, 1984

ATTACHMENT TO LICENSE AMENDMENT NO.32

AMENDMENT NO. 32 FACILITY OPERATING LICENSE NO. DPR-5

DOCKET NO. 50-3

Revise Appendix A as follows:

Remove Pages	Insert Pages
6 thru 11	6 thru 14

Revised Appendix B Part II as follows:

Remove Pages	Insert Pages
All pages	Cover Page

4.0 OPERATING LIMITATIONS

4.1 General

4.1.1 Whenever any operation is being performed that could result in the release of radioactivity or create a change in radiation levels, supporting facilities shall be maintained and operated as required in these Technical Specifications.

4.1.2 The concentration of radioactive materials released in liquid or gaseous form to unrestricted areas shall not exceed the limits specified in 10 CFR Part 20. Release of radioactive liquids and gases shall also be consistent with the requirements of 10 CFR Part 50, Appendix I, as specified in Specifications 3.9. and 4.10. of Appendix A to the Indian Point Unit No. 2 Facility Operating License No. DPR-26.

4.1.3 All radioactive waste material shall be handled in accordance with 10 CFR Part 20. In addition, solid radioactive waste shall be controlled as specified in Specifications 3.9.D and 4.10.D of Appendix A to the Indian Point Unit No. 2 Facility Operating License No. DPR-26.

4.1.4 Radiation monitoring systems shall be maintained operational for: (1) nulcear services building sewage, (2) chemical systems building sewage, (3) sphere foundation sump, (4) secondary purification blowdown cooling water, and (5) area radiation monitors. If monitoring systems are not operational, effluent sampling and/or local monitoring shall be accomplished to replace the non-operating system. In addition, Unit 1 radioactive effluent monitoring instrumentation shall be operable as specified in Specification 3.9 of Appendix A to Indian Point Unit No. 2 Facility Operating License No. DPR-26.

4.1.5 The Indian Point site meteorological monitoring system shall be maintained and operated as specified in Specifications 3.15 and 4.19 of Appendix A to the Indian Point Unit No. 2 Facility Operating License No. DPR-26.

4.1.6 The Indian Point site Radiological Environmental Monitoring Program shall be conducted as specified in Specification 4.11 of Appendix A to the Indian Point Unit No. 2 Facility Operating License No. DPR-26.

4.2 Operations Limits

4.2.10 Spent Fuel Storage and Handling

4.2.10.3 All irradiated fuel shall be stored in the racks provided in the Fuel Handling Building storage pools.

5.0 MAINTENANCE

5.1 General

5.1.2 Components addressed in these technical specification requirements which have been repaired, replaced, or otherwise subjected to temporary or permanent modification shall be tested in accordance with procedures which are appropriate in view of the nature of the repair, replacement, or modification, and the condition of the system.

5.2 Testing The following surveillance tests shall be performed within the stated intervals.

5.2.5 Functional radiation monitoring systems (only for the following monitors: nuclear services building sewage, chemical systems building sewage, sphere foundation sump, and secondary purification blowdown cooling water) and area radiation monitoring systems shall be:

(a) qualitatively checked daily to verify acceptable operability of instrument channel behavior during operation, and

(b) tested quarterly by injection of a simulated signal into the instrument channel to verify that it is operable, including alarm and/or trip initiating action. The quarterly interval is defined as quarterly plus or minus 25% of the quarter.

In addition, Unit 1 radioactive effluent monitoring instrumentation shall satisfy the surveillance requirements as specified in Specification 4.10 of Appendix A to the Indian Point Unit No. 2 Facility Operating License No. DPR-26.

6.0 PLANT REPORTING REQUIREMENTS

ROUTINE REPORTS AND REPORTABLE OCCURRENCES

6.1 In addition to the applicable reporting requirements of Title 10, Code of Federal Regulations, the following reports shall be submitted to the Director of the Region I Office of Inspection and Enforcement unless otherwise noted.

Startup Report

6.2 A summary report of plant startup and power escalation testing shall be submitted following (1) amendment to the license involving a planned increase in power level, (2) installation of fuel that has a different design or has been manufactured by a different fuel supplier, and (3) modifications that may have significantly altered the nuclear, thermal, or hydraulic performance of the plant. The report shall address each of the appropriate tests identified in the FSAR and shall include a description of the measured values of the operating conditions or characteristics obtained during the test program and a comparison of these values with design predictions and specifications. Any corrective actions that were required to obtain satisfactory operation shall also be described. Any additional specific details required in license conditions based on other committments shall be included in this report.

6.3 Startup reports shall be submitted within (1) 90 days following completion of the startup test program, (2) 90 days following resumption or commencement of commercial power operation, or (3) 9 months following initial criticality, whichever is earliest. If the Startup Report does not cover all three events (i.e., initial criticality, completion of startup test program, and resumption of commencement of commercial power operation), supplementary reports shall be submitted at least every three months until all three events have been completed.

Annual Radiation Exposure Report[1]

6.4 Routine reports of occupational radiation exposure data during the previous calendar year shall be submitted no later than March 1 of each year.

6.5 The annual radiation exposure reports shall provide a tabulation on an annual basis of the number of station, utility and other personnel (including contractors) receiving exposures greater than 100 mrem/yr and their associated man-rem exposure according to work and job functions[2], e.g., reactor operations and surveillance, inservice inspection, routine maintenance, special maintenance (describe maintenance), waste processing, and refueling. The dose assignment to various duty functions may be estimates based on pocket dosimeter, TLD, or film badge measurements. Small exposures totalling less than 20% of the individual total dose need not be accounted for. In the aggregate, at least 80% of the total whole body dose received from external sources shall be assigned to specific major work functions.

[1]A single submittal may be made for a multiple unit station. The submittal should combine those sections that are common to all units at the station.

[2]This tabulation supplements the requirements of 20.407 of 10 CFR Part/20.

Annual Radiological Environmental Operating Report1

6.6 Routine Radiological Environmental Operating Reports covering the operation of the unit during the previous calendar year shall be submitted prior to May 1 of each year.

6.7 The Annual Radiological Environmental Operating Reports shall include summaries, interpretations, and statistical evaluation of the results of the radiological environmental surveillance activities for the report period, including (as appropriate) a comparison with preoperational studies, operational controls and previous environmental surveillance reports, and an assessment of the observed impacts of the plant operation on the environment. The report shall also include the results of land use censuses required by Specification 4.11.B. of Appendix A to the Indian Point Unit #2 Facility Operating License No. DPR-26.

The Annual Radiological Environmental Operating Reports shall include the results of analysis of all radiological environmental samples and of all environmental radiation measurements taken during the period pursuant to the locations specified in the in the Table and Figures in the ODCM, as well as summarized and tabulated results of these analyses and measurements as described in the ODCM. In the event that some individual results are not available for inclusion with the report, the report shall be submitted noting and explaining the reasons for the missing results. The missing data shall be submitted as soon as possible in a supplementary report.

The reports shall also include the following: a summary description of the radiological environmental monitoring program; at least two legible maps[3] covering all sampling locations keyed to a table giving distances and directions from the centerline of one reactor; the results of licensee participation in the Interlaboratory Comparison Program; discussion and all deviations from the sampling schedule; and discussion of all analyses in which the LLD required was not achievable.

[3] One map shall cover stations near the site boundary; a second shall include more distant stations.

Semiannual Radioactive Effluent Release Reportl

6.8 Routine radioactive effluent release reports covering the previous 6 months of operation shall be submitted within 60 days after January 1 and July 1 of each year.

6.9 The radioactive effluent release reports shall include a summary of the quantities of radioactive liquid and gaseous effluents and solid waste released from the unit as outlined in the Regulatory Guide 1.21 (Rev.1), "Measuring, Evaluating, and Reporting Radioactivity in Solid Wastes and Releases of Radioactive Materials in Liquid Gaseous Effluents from Light-Water-Cooled Nuclear Power Plants", with data summarized on a quarterly basis following the format of Appendix B thereof.

The Radioactive Effluent Release Report to be submitted within 60 days after January 1 of each year shall include an annual summary of hourly meteorological data collected over the previous year. This annual summary may be either in the form of an hour-by-hour listing on magnetic tape of wind speed, wind direction, atmospheric stability, and preciptation (if measured), or in the form of joint frequency distribution of wind speed, wind direction, and atmospheric stability.[4] This same report shall include an assessment of the radiation doses due to the radioactive liquid and gaseous effluents release from the unit or station during the previous calendar year. This same report shall also include an assessment of the radiation doses from radioactive liquid and gaseous effleunts to members of the public due to their activities inside the site boundary during the report period. All assumptions used in making these assessments, i.e., specific activity, exposure time and location, shall be included in these reports. The meteorological conditions concurrent with the time of release of radioactive materials in gaseous effluents, as determined by sampling frequency and measurement, shall be used for determining the gaseous pathway doses. Approximate and conservative approximate methods are acceptable. The assessment of radiation doses shall be performed in accordance with the methodology and parameters in the Offsite Dose Calculation Manual(ODCM).

[4] In lieu of submission with the first half year Radioactive Effluent Release Report, the licensee has the option of retaining this summary of required meteorological data on site in a file that shall be provided to the NRC upon request.

Acceptable methods for calculating the dose contribution from liquid and gaseous effluents are given in Regulatory Guide 1.109 Rev. 1, October 1977.

The Radioactive Effluent Release Reports shall include the following information for each class of solid waste (in compliance with 10 CFR Part 61) shipped offsite during the report period:

a) Container volume.

b) Total Curie quantity (specify whether determined by measurement or estimate),

c) Principal radionuclides (specify whether determined by measurement or estimate),

d) Source of waste and processing employed (e.g., dewatered spent resin, compacted dry waste, evaporator bottom),

e) Type of container (e.g., LSA, Type A, Type B, Large Quantity), and

f) Solidification agent or absorbent (e.g., cement, urea formaldehyde).

The Radioactive Effluent Release Reports shall include a list and description of unplanned releases from the site to unrestricted areas of radioactive materials in gaseous and liquid effluents made during the reporting period.

The Radioactive Effluent Release Reports shall include any changes made during the reporting period to the Process Control Program(PCP) and to the Offsite Dose Calculation Manual(ODCM), as well as a listing of new locations for dose calculations and/or environmental minotoring identified by the land use census pursuant to Specification 4.11.B. of Appendix A to the Indian Point Unit No. 2 Facility Operating License No. DPR-26.

Special Reports

6.10 Reports of major safety-related corrective maintenance shall be submitted to the Director, Office of Management Information and Program Control, with 40 copies to the Office of Inspection and Enforcement, U.S. Nuclear Regulatory Commission, Washington, D.C. 20555, no later than 6 months following completion of such maintenance.

6.11 Each such report shall include a description of any major safety-related corrective maintenance performed including the system and component involved.

Reportable Occurrences

6.12 The reportable occurrences of specifications 6.12.1 and 6.12.2 below, including corrective actions and measures to prevent recurrence, shall be reported to the NRC. Supplemental reports may be required to fully describe final resolution of occurrence. In case of corrected or supplemental reports, a licensee event report shall be completed and reference shall be made to the original report date.

Prompt Notification with Written Followup Report

6.12.1 The types of events listed below shall be reported within 24 hours of identification by telephone and confirmed by telegraph, mailgram, or facsimile transmission to the Director of the Region I Office of Inspection and Enforcement or his designate, no later than the first working day following the event, with a written followup report within two weeks. The written followup report shall include, as a minimum, a completed copy of a licensee event report form. Information provided on the licensee event report form shall be supplemented, as needed, by additional narrative material to provide complete explanation of the circumstances surrounding the event.

a. Failure of the reactor protection system or other systems subject to limiting safety system settings to initiate the required protective function by the time a monitored parameter reaches the setpoint specified as the limiting safety system setting in the technical specifications or failure to complete the required protective function.

b. Operation of the unit or affected systems when any parameter or operation subject to a limiting condition for operation is less conservative than the least conservative aspect of the limiting condition for operation established in the technical specifications.

c. Abnormal degradation discovered in fuel cladding, reactor coolant pressure boundary, or primary containment.[5]

d. Reactivity anomalies involving disagreement with the predicted value of reactivity balance under steady state conditions during power operation greater than or equal to 1% $\Delta k/k$; a calculated reactivity balance indicating a shutdown margin less conservative than specified in the technical specifications; short-term reactivity increases that correspond to a reactor period of less than 5 seconds or, if subcritical, an unplanned reactivity insertion of more than 0.5% $\Delta k/k$; or occurrence of an unplanned criticality.

e. Failure or malfunction of one or more components which prevents or could prevent, by itself, the fulfillment of the functional requirements of system(s) used to cope with accidents analyzed in the SAR.

f. Personnel error or procedural inadequacy which prevents or could prevent, by itself, the fulfillment of the functional requirements of system(s) required to cope with accidents analyzed in the SAR.

g. Conditions arising from natural or man-made events that, as a direct result of the event require plant shutdown, operation of safety systems, or other protective measures required by technical specifications.

h. Errors discovered in the transient or accident analyses or in the methods used for such analyses as described in the safety analysis report or in the bases for the technical specifications that have or could have permitted reactor operation in a manner less conservative than assumed in the analyses.

i. Performance of structures, systems, or components that requires remedial action or corrective measures to prevent operation in a manner less conservative than assumed in the accident analyses in the safety analysis report or technical specifications bases; or discovery during plant life of conditions not specifically considered in the safety analysis report or technical specifications that require remedial action or corrective measures to prevent the existence or development of an unsafe condition.

[5] Leakage of packing, gaskets, mechanical joints or seal welds within the limits for identified leakage set forth in technical specifications need not be reported under this item.

Thirty Day Written Reports

6.12.2 The types of events listed below shall be the subject of written reports to the Director of the Region I Office of Inspection and Enforcement within thirty days of occurrence of the event. The written report shall include, as a minimum, a completed copy of a licensee event report form. Information provided on the licensee event report form shall be supplemented, as needed, by additional narrative material to provide complete explanation of the circumstances surrounding the event.

a. Reactor protection system or engineered safety feature instrument settings which are found to be less conservative than those established by the technical specifications but which do not prevent the fulfillment of the functional requirements of affected systems.[6]

b. Conditions leading to operation in a degraded mode permitted by a limiting condition for operation or plant shutdown required by a limiting condition for operation.[6]

c. Observed inadequacies in the implementation of administrative or procedural controls which threaten to cause reduction of degree of redundancy provided in reactor protection systems or engineered safety feature systems.

d. Abnormal degradation of systems other than those specified in 6.12.1.c above designed to contain radioactive material resulting from the fission process.[7]

6.13 Any references to the term "Safety Analysis Report", "SAR", or "FSAR" for Indian Point Station, Unit No. 1, shall be deemed to refer, as appropriate, to the following exhibits which are a part of the application: F-4 (Rev.-3), F-6 (Rev.-2), F-7 (Rev.1), G-3 (Rev.-2), H-14 (Rev.-2), K-4, K-4A, K-4B, K-5 (Rev.-1, but not including Sections 2.1.2 through 2.3.7.4, Section 4, Figures 2-1 through 2-9, Figure 3-17, Figures 4-1 through 4-12, and Appendix A), K-5A1, K-5A10, K-5A11, K-5A11A, K-5A12, K-5A13, K-5A14, as amended, K-5A15, K-16, and the document entitled "Final Hazards Summary Report for the Consolidated Edison Indian Point Reactor Core B", as amended.

---

[6]Routine surveillance testing, instrument calibration, or preventive maintenance which require system configurations as described need not be reported except where tests results themselves reveal a degraded mode as described.

[7] Sealed sources or calibration sources are not included under this item. Leakage of valve packing or gaskets within the limits for identified leakage set forth in technical specifications need not be reported under this item.

APPENDIX B

TO

FACILITY OPERATING LICENSE

FOR

CONSOLIDATED EDISON COMPANY

OF NEW YORK, INC.

INDIAN POINT NUCLEAR GENERATING

UNITS NUMBERS 1 AND 2

ENVIRONMENTAL TECHNICAL SPECIFICATION

REQUIREMENTS

PART II: RADIOLOGICAL ENVIRONMENTAL TECHNICAL

SPECIFICATION REQUIREMENTS

FACILITY LICESSES NO. DPR-5 AND DPR-26

DOCKET NUMBERS 50-3 AND 50-247

Deleted

Amendment No. 32 , Unit 1
Amendment No. 90 , Unit 2

UNITED STATES
NUCLEAR REGULATORY COMMISSION
WASHINGTON, D. C. 20555

CONSOLIDATED EDISION COMPANY OF NEW YORK, INC.

DOCKET NO. 50-247

INDIAN POINT NUCLEAR GENERATING UNIT NO. 2

AMENDMENT TO FACILITY OPERATING LICENSE

Amendment No.90
License No. DPR-26

1. The Nuclear Regulatory Commission (the Commission) has found that:

   A. The application for amendment by Consolidated Edison Company of New York, Inc. (the licensee) dated February 1, 1983, complies with the standards and requirements of the Atomic Energy Act of 1954, as amended (the Act) and the Commission's rules and regulations set forth in 10 CFR Chapter I;

   B. The facility will operate in conformity with the application, the provisions of the Act, and the rules and regulations of the Commission;

   C. There is reasonable assurance (i) that the activities authorized by this amendment can be conducted without endangering the health and safety of the public, and (ii) that such activities will be conducted in compliance with the Commission's regulations;

   D. The issuance of this amendment will not be inimical to the common defense and security or to the health and safety of the public; and

   E. The issuance of this amendment is in accordance with 10 CFR Part 51 of the Commission's regulations and all applicable requirements have been satisfied.

2. Accordingly, the license is amended by changes to the Technical Specifications as indicated in the attachment to this license amendment, and paragraph 2.C.(2) of Facility Operating License No. DPR-26 is hereby amended to read as follows:

(2) Technical Specifications

The Technical Specifications contained in Appendices A and B, as revised through Amendment No.90 , are hereby incorporated in the license. The licensee shall operate the facility in accordance with the Technical Specifications.

3. This license amendment is effective on issuance, to be implemented no later than July 1, 1984.

FOR THE NUCLEAR REGULATORY COMMISSION

Steven A. Varga, Chief
Operating Reactors Branch #1
Division of Licensing

Attachment:
Changes to the Technical
Specifications

Date of Issuance: June 6, 1984

ATTACHMENT TO LICENSE AMENDMENT

AMENDMENT NO. 90 TO FACILITY OPERATING LICENSE NO. DPR-26

DOCKET NO. 50-247

Revise Appendix A as follows:

Remove Pages	Insert Pages
i thru v	i thru vii
1-3	1-3
1-4a thru 1-5	1-5 thru 1-7
3.9-1	3.9-1 thru 3.9-18
----------	3.15-1 thru 3.15-2
Table 4.1-1 pgs. 1&2	Table 4.1-1 pgs. 1&2
4.10-1	4.10-1 thru 4.10-12
4.11-1	4.11-1 thru 4.11-14
----------	4.19-1 thru 4.19-2
5.1	5.-1 and Fig. 5.1-1
----------	6-6(a)
6-10 thru 6-13	6-10 thru 6-13
6-15 thru 6-22	6-15 thru 6-27

Revise Appendix B Part II as follows:

Remove Pages	Insert Pages
All pages	Cover page

TABLE OF CONTENTS

Section	Title	Page
	TECHNICAL SPECIFICATIONS	
1	Definitions	1-1
2	Safety Limits and Limiting Safety System Settings	2.1-1
2.1	Safety Limit, Reactor Core	2.1-1
2.2	Safety Limit, Reactor Coolant System Pressure	2.2-1
2.3	Limiting Safety System Settings, Protective Instrumentation	2.3-1
3	Limiting Conditions for Operation	3.1-1
3.1	Reactor Coolant System	3.1-1
	Operational Components	3.1-1
	Heatup and Cooldown	3.1-4
	Minimum Conditions for Criticality	3.1-9
	Maximum Reactor Coolant Activity	3.1-11
	Maximum Reactor Coolant Oxygen, Chloride and Fluoride Concentration	3.1-14
	Reactor Coolant System Leakage and Leakage into the Containment Free Volume	3.1-17
3.2	Chemical and Volume Control System	3.2-1
3.3	Engineered Safety Features	3.3-1
	Safety Injection and Residual Heat Removal Systems	3.3-1
	Containment Cooling and Iodine Removal Systems	3.3-3
	Isolation Valve Seal Water System	3.3-4
	Weld Channel and Penetration Pressurization System	3.3-4(a)
	Component Cooling System	3.3-5
	Service Water System	3.3-6
	Hydrogen Recombiner System and Post Accident Containment Venting System	3.3-6
	Control Room Air Filtration System	3.3-7
	Cable Tunnel Ventilation Fans	3.3-7(a)
3.4	Steam and Power Conversion System	3.4-1
3.5	Instrumentation Systems	3.5-1
3.6	Containment System	3.6-1
	Containment Integrity	3.6-1
	Internal Pressure	3.6-2
	Containment Temperature	3.6-2
3.7	Auxiliary Electrical Systems	3.7-1
3.8	Refueling	3.8-1
3.9	Radioactive Effluents	3.9-1

TABLE OF CONTENTS (Cont'd)

Section	Title	Page
3.10	Control Rod and Power Distribution Limits	3.10-1
	Shutdown Reactivity	3.10-1
	Power Distribution Limits	3.10-1
	Quadrant Power Tilt Limits	3.10-4
	Rod Insertion Limits	3.10-5
	Rod Misalignment Limitations	3.10-6
	Inoperable Rod Position Indicator Channels	3.10-6
	Inoperable Rod Limitations	3.10-7
	Rod Drop Time	3.10-7
	Rod Position Monitor	3.10-7
	Quadrant Power Tilt Monitor	3.10-7
	Notification	3.10-8
3.11	Movable In-Core Instrumentation	3.11-1
3.12	Shock Suppressors (Snubbers)	3.12-1
3.13	Fire Protection and Detection Systems	3.13-1
3.14	Hurricane Alert	3.14-1
3.15	Meteorological Monitoring System	3.15-1
4	Surveillance Requirements	4.1-1
4.1	Operational Safety Review	4.1-1
4.2	Primary System Surveillance	4.2-1
4.3	Reactor Coolant System Integrity Testing	4.3-1
4.4	Containment Tests	4.4-1
	Integrated Leakage Rate	4.4-1
	Sensitive Leakage Rate	4.4-2
	Air Lock Tests	4.4-3
	Containment Isolation Valves	4.4-3
	Containment Modifications	4.4-4
	Report of Test Results	4.4-5
	Visual Inspection	4.4-5
	Residual Heat Removal System	4.4-5
4.5	Engineered Safety Features	4.5-1
	Safety Injection System	4.5-1
	Containment Spray System	4.5-2
	Hydrogen Recombiner System	4.5-2
	Containment Air Filtration System	4.5-3
	Control Room Air Filtration System	4.5-4
	Fuel Storage Building Air Filtration System	4.5-6
	Post Accident Containment Venting System	4.5-8
4.6	Emergency Power System Periodic Tests	4.6-1
	Diesel Generators	4.6-1
	Diesel Fuel Tanks	4.6-2
	Station Batteries	4.6-2
	Gas Turbine Generators	4.6-2
	Gas Turbine Fuel Supply	4.6-3

TABLE OF CONTENTS (Cont'd)

Section	Title	Page
4.7	Main Steam Stop Valves	4.7-1
4.8	Auxiliary Feedwater System	4.8-1
4.9	Reactivity Anomalies	4.9-1
4.10	Radioactive Effluents	4.10-1
4.11	Radiological Environmental Monitoring	4.11-1
4.12	Shock Suppressors (Snubbers)	4.12-1
4.13	Steam Generator Tube Inservice Surveillance	4.13-1
	Inspection Requirements	4.13-1
	Acceptance Criteria and Corrective Action	4.13-7
	Reports and Review and Approval of Results	4.13-8
4.14	Fire Protection and Detection Systems	4.14-1
4.15	Radioactive Materials Surveillance	4.15-1
4.16	Reactor Coolant System and Containment Free Volume Leakage Detection and Removal Systems Surveillance	4.16-1
4.17	Hurricane Alert	4.17-1
4.18	Reserved	4.18-1
4.19	Meteorological Monitoring System	4.19-1
5	Design Features	5.1-1
5.1	Site	5.1-1
5.2	Containment	5.2-1
	Reactor Containment	5.2-1
	Penetrations	5.2-1
	Containment Systems	5.2-2
5.3	Reactor	5.3-1
	Reactor Core	5.3-1
	Reactor Coolant System	5.3-1
5.4	Fuel Storage	5.4-1
6.0	Administrative Controls	6-1
6.1	Responsibility	6-1
6.2	Organization	6-1
	Facility Management and Technical Support	6-1
	Facility Staff	6-1
6.3	Facility Staff Qualifications	6-1
6.4	Training	6-5
6.5	Review and Audit	6-5
	Station Nuclear Safety Committee	6-5
	1) Function	6-5
	2) Composition	6-5
	3) Alternates	6-5
	4) Meeting Frequency	6-5
	5) Quorum	6-5
	6) Responsibilities	6-6
	7) Authority	6-6
	8) Records	6-7

TABLE OF CONTENTS (Cont'd)

Section	Title	Page
	Nuclear Facilities Safety Committee	6-7
	1) Function	6-7
	2) Composition	6-8
	3) Alternates	6-8
	4) Consultants	6-9
	5) Meeting Frequency	6-9
	6) Quorum	6-9
	7) Review	6-9
	8) Audits	6-10
	9) Authority	6-11
	10) Records	6-11
6.6	Reportable Occurrence Action	6-12
6.7	Safety Limit Violation	6-12
6.8	Procedures	6-12
6.9	Reporting Requirements	6-13
	Routine and Reportable Occurrence Reports	6-13
	Startup Reports	6-14
	Annual Radiological Env. Operating Report	6-15
	Semiannual Radioactive Effluent Report	6-16
	Monthly Operating Report	6-18
	Reportable Occurrence	6-19
	Special Reports	6-22
6.10	Record Retention	6-23
6.11	Radiation Protection Program	6-24
6.12	High Radiation Area	6-24
6.13	Environmental Qualification	6-25
6.14	Process Control Program (PCP)	6-25
6.15	Offsite Dose Calculation Manual (ODCM)	6-26
6.16	Major Changes to Radioactive Wastes Systems	6-26

LIST OF TABLES

Frequency Notation	1-1
IP2 Reactor Vessel Core Region Material	3.1-1
Engineered Safety Features Initiation Instrument Setting Limits	3-1
Reactor Trip Instrumentation Limiting Operating Conditions	3-2
Instrumentation Operating Condition for Engineered Safety Features	3-3
Instrumentation Operating Conditions for Isolation Functions	3-4
Table of Indications Available to the Control Room Operator	3-5
Non-Automatic Containment Isolation Valves Open Continuously or Intermittently for Plant Operation	3.6-1
Radioactive Liquid Effluent Monitoring Instrumentation	3.9-1
Radioactive Gaseous Effluent Monitoring Instrumentation	3.9-2
Analyses Requiring Evaluation in the Event of an Inoperable Rod	3.10-1
Safety Related Shock Suppressors (Snubbers)	3.12-1
Fire Detection Instruments	3.13-1
Fire Hose Stations and Fire Hydrants	3.13-2
Meteorological Monitoring Instrumentation	3.15-1
Minimum Frequencies for Checks, Calibrations and Tests of Instrument Channels	4.1-1
Frequencies for Sampling Tests	4.1-2
Frequencies for Equipment Tests	4.1-3

LIST OF TABLES (Cont'd)

Inservice Inspection Requirements for Indian Point No. 2	4.2-1
Containment Isolation Valves	4.4-1
Radioactive Liquid Waste Sampling and Analysis Program	4.10-1
Radioactive Liquid Effluent Monitoring Instrumentation Surveillance Requirements	4.10-2
Radioactive Gaseous Waste Sampling and Analysis Program	4.10-3
Radioactive Gaseous Effluent Monitoring Instrumentation Surveillance Requirements	4.10-4
Radiological Environmental Monitoring Program	4.11-1
Reporting Levels for Radioactivity Concentrations in Environmental Samples	4.11-2
Detection Capabilities for Environmental Sample Analysis	4.11-3
Steam Generator Tube Inspection	4.13-1
Meterological Monitoring Instrumentation Surveillance Requirements	4.16-1
Minimum Shift Crew Composition	6.2-1

LIST OF FIGURES

Safety Limits Four Loop Operation 100% Flow	2.1-1
Safety Limits Three Loop Operation 73% Flow	2.1-2
Reactor Coolant System Heatup Limitations	3.1-1
Reactor Coolant System Cooldown Limitations	3.1-2
Required Hot Shutdown Margin vs. Reactor Coolant Boron Concentration	3.10-1
Hot Channel Factor Normalized Operating Envelope	3.10-2
Insertion Limits, 100 Step Overlap Four Loop Operation	3.10-3
Insertion Limits, 100 Step Overlap Three Loop Operation	3.10-4
Target Band on Indicated Flux Difference as a Function of Operating Power Level 3.10-5	
Permissible Operating Band on Indicated Flux Difference as a Function of Burnup 3.10-6	
Reactor Coolant System Heatup Limitation	4.3-1
Unrestricted Areas for Radioactive Gaseous and Liquid Effluents	5.1-1
Facility Management and Technical Support Organization	6.2-1
Facility Organization	6.2-2

1.6.1 Channel Check

A qualitative determination of acceptable operability by observation of channel behavior during operation. This determination shall include, where possible, comparison of the channel with other independent channels measuring the same variable.

1.6.2 Channel Functional Test

Injection of a simulated signal into the channel to verify that it is operable, including alarm and/or trip initiating action.

1.6.3 Channel Calibration

Adjustment of channel output such that it responds, with acceptable range and accuracy, to known values of the parameter which the channel measures. Calibration shall encompass the entire channel, including alarm or trip, and shall be deemed to include the channel functional test.

1.6.4 Source Check

A Source Check is the qualitative assessment of channel response when the channel sensor is exposed to a source of increased radioactivity.

1.7 Containment Integrity

Containment integrity is defined to exist when:

a. All non-automatic containment isolation valves which are not required to be open during accident conditions, except those required to be open for normal plant operation or testing as identified in Specification 3.6.1, are closed and blind flanges are installed where required.

b. The equipment door is properly closed and sealed by the Weld Channel and Penetration and Pressurization System.

c. At least one door in each personnel air lock is properly closed.

d. All automatic containment isolation valves are either operable or in the closed position, or isolated by a closed manual valve or flange that meets the same design criteria as the isolation valve.

e. Containment leakage has been verified in accordance with the surveillance requirements of Specifications 4.4, and the requirements of Specifications 3.3.D are being satisfied.

d. Reactor coolant system leakage into the containment free volume from sources that are both specifically located and known either not to interfere with the operation of required leakage detection systems or not to be pressure boundary leakage.

1.13 Unidentified Leakage

Unidentified Leakage shall be all reactor coolant system leakage which is not identified leakage.

1.14 Dose Equivalent I-131

The Dose Equivalent I-131 is that concentration of I-131 which would produce the same thyroid dose as the quantity and isotopic mixture of I-131, I-132, I-133, I-134 and I-135 actually present. The thyroid conversion factors shall be those listed in Table III of TID-14844, "Calculation of Distance Factors for Power and Test Reactor Sites".

1.15 Gaseous Radwaste Treatment System

A Gaseous Radwaste Treatment System is any system designed and installed to reduce radioactive gaseous effluents by collecting primary coolant system offgases from the primary system and providing for delay or holdup for the purpose of reducing the total radioactivity prior to release to the environment.

1.16 Member(s) of the Public

Member(s) of the Public includes all persons who are not occupationally associated with the site. This category does not include employees of either utility, their contractors or vendors. Also excluded from this category are persons who enter the site to service equipment or to make deliveries.

1.17 Offsite Dose Calculation Manual (ODCM)

The Offsite Dose Calculation Manual shall contain the current methodology and parameters used in the calculation of offsite doses due to radioactive gaseous and liquid effluents, in the calculation of gaseous and liquid effluent monitoring alarm/trip setpoints, and in the conduct of the environmental radiological monitoring program.

1.18 Process Control Program (PCP)

The Process Control Program (PCP) is a manual containing and/or referencing selected operational information concerning the solidification of radioactive wastes from liquid systems.

1.19 Purge - Purging

Purge or Purging is the controlled process of discharging air or gas from a confinement to maintain temperature, pressure, humidity, concentration or other operating condition, in such a manner that replacement air or gas is required to purify the confinement.

1.20 Site Boundary

The Site Boundary is that line beyond which the land is neither owned, leased, nor otherwise controlled by either site licensee.

1.21 Solidification

Solidification is the conversion of wet wastes into a form that meets shipping and burial ground requirements.

1.22 Unrestricted Area

An Unrestricted Area is any area at or beyond the Site Boundary access to which is not controlled by either site licensee for purposes of protection of individuals from exposure to radiation and radioactive materials.

1.23 Ventilation Exhaust Treatment System

A Ventilation Exhaust Treatment System is any system designed and installed to reduce gaseous radioiodine or radioactive material in particulate form in effluents by passing ventilation or vent exhaust gases through charcoal adsorbers and/or HEPA filters for the purpose of removing iodines or particulates from the gaseous exhaust stream prior to the release to the environment. Such a system is not considered to have any effect on noble gas effluents. Engineered Safety Feature (ESF) atmosphere cleanup systems are not considered to be ventilation exhaust treatment system components.

1.24 Venting

Venting is the controlled process of discharging air or gas from a confinement to maintain temperature, pressure, humidity, concentration or other operating condition, in such a manner that replacement air or gas is not provided or required.

TABLE 1-1

FREQUENCY NOTATION

Notation	Test Frequency/Requirements	Surveillance Interval
Shift (S)	At least twice per calendar day	N.A.
Daily (D)	At least once per calendar day	N.A.
Weekly (W)	At least once per week	7 days
Monthly (M)	At least once per month	31 days
Quarterly (Q)	At least once per three months	92 days
Semi-Annually(SA)	At least once per six months	6 months
Annually (A)	At least once per 12 months	12 months
Refueling (R)	At least once per 18 months	18 months
S/U	Prior to each reactor startup	-
P	Completed prior to each release	-
N.A.	Not Applicable	

3.9 RADIOACTIVE EFFLUENTS

Applicability

This specification applies to the control of liquid, gaseous and solid radioactive wastes from the facility.

Objective

To define limits and conditions for the controlled release of radioactive materials to the environs such that these releases are as low as is reasonably achievable (ALARA) and within allowable regulatory limits.

Specifications

A. RADIOACTIVE LIQUID EFFLUENTS:

1. Liquid Effluent Concentration:

   a. The concentration of radioactive material released in liquid effluents to Unrestricted Areas (see Figure 5.1-1) shall be limited to the concentrations specified in 10CFR Part 20, Appendix B, Table II, Column 2 for radionuclides other than dissolved or entrained noble gases. For dissolved or entrained noble gases, the concentration shall be limited to 2×10^{-4} microcuries/ml.

   b. With the concentration of radioactive material released in liquid effluents to Unrestricted Areas exceeding the above limits, without delay restore the concentration to within the the above limits.

2. Liquid Effluent Instrumentation:

   a. The radioactive liquid effluent monitoring instrumentation channel shown in Table 3.9-1 shall be Operable with their alarm/trip setpoints set to ensure that the limits of Specification 3.9.A.1.a are not exceeded. The alarm/trip setpoints of these channels shall be determined and adjusted in accordance with the methodology and parameters in the offsite dose calculation manual(ODCM).

   b. With a radioactive liquid effluent monitoring instrumentation channel alarm/trip setpoint less conservative than required by the above specification, without delay suspend the release of radioactive liquid effluents monitored by the affected channel, or declare the channel inoperable, or change the setpoint so it is acceptably conservative.

c. With less than the minimum number of radioactive liquid effluent monitoring instrumentation channels operable, take the action shown in Table 3.9-1. Exert best efforts to return the instruments to operable status within 30 days and, if unsuccessful, explain in the next Semiannual Radioactive Effluent Release Report why the inoperability was not corrected in a timely manner.

d. The provisions of Specification 6.9.1.7.2.b are not applicable.

3. Liquid Effluent Dose:

a. The dose or dose commitment to a member of the public from radioactive materials in liquid effluents released, from each reactor unit, to unrestricted areas (see Figure 5.1-1) shall be limited:

(i) During any calendar quarter to less than or equal to 1.5 mrems to the total body and to less than or equal 5 mrems to any organ, and

(ii) During any calendar year to less than or equal to 3 mrems to the total body and to less than or equal to 10 mrems to any organ.

b. With the calculated dose from the release of radioactive materials in liquid effluents exceeding any of the above limits, in lieu of a Licensee Event Report, prepare and submit to the Commission within 30 days, pursuant to Specification 6.9.2, a Special Report that identifies the causes(s) for exceeding the limit(s) and defines the corrective actions that have been taken to reduce the releases and the proposed corrective actions to be taken to assure that subsequent releases will be in compliance with the above limits.

4. Liquid Waste Treatment

a. The applicable portions of the liquid radwaste treatment system shall be used as needed to reduce the radioactive materials in liquid wastes prior to their discharge when the projected doses due to the liquid effluent, from each reactor unit, to unrestricted areas (see Figure 5.1-1) would exceed 0.06 mrem to the total body or 0.2 mrem to any organ in a 31 day period.

b. With radioactive liquid waste being discharged without treatment and in excess of the above limits, in lieu of a Licensee Event Report, prepare and submit to the Commission within 30 days pursuant to Specification 6.9.2 a Special Report that includes the following information:

(i) Explanation of why liquid radwaste was being discharged without treatment, identification of any inoperable equipment of subsystems, and the reason for the inoperability.

(ii) Action(s) taken to restore the inoperable equipment to operable status, and

iii) Summary description of action(s) taken to prevent a recurrence.

5. Liquid Holdup Tanks

a. The quantity of radioactive material contained in each of the following unprotected outdoor tanks shall be limited to less then or equal to 10 curies, excluding tritium and dissolved or entrained noble gases.

a. Refueling Water Storage Tank
b. Primary Water Storage Tank
c. 13, 14 Waste Distillate Storage Tanks
d. 21, 22, 23 Monitor tanks.
e. Outside temporary tank

a. With the quantity of radioactive material in any of the above listed tanks exceeding the above limit, immediately suspend all additions of radioactive material to the tank, take action within 48 hours to reduce the tank contents to within the limit, and describe the events leading to this condition in the next Semiannual Radioactive Effluent Release Report.

B. RADIOACTIVE GASEOUS EFFLUENTS:

1. Gaseous Effluent Dose Rate:

a. The dose rate due to radioactive materials released in gaseous effluents from the site to areas at and beyond the site boundary (see Figure 5.1-1) shall be limited to the following:

(i) For noble gases: Less than or equal to 500 mrems/yr to the total body and less than or equal to 3000 mrems/yr to the skin, and

(ii) For iodine-131, for tritium and for all radionuclides in particulate form with half lives greater than 8 days: Less than or equal to 1500 mrem/yr to any organ.

b. With the dose rate(s) exceeding the above limits, without delay restore the release rate to within the above limit(s).

2. Gaseous Effluent Instrumentation:

a. The radioactive gaseous effluent monitoring instrumentation channels shown in Table 3.9-2 shall be operable with their alarm/trip setpoints set to ensure that the limits of Specification 3.9.B.1 are not exceeded. The alarm/trip setpoints of these channels shall be determined and adjusted in accordance with the methodology and parameters in the ODCM.

b. With a radioactive gaseous effluent monitoring instrumentation channel alarm/trip setpoint less conservative than required by the above Specification, without delay suspend the release of radioactive gaseous effluents monitored by the affected channel, or declare the channel inoperable, or change the setpoint so it is acceptably conservative.

c. With less than the minimum number of radioactive gaseous effluent monitoring instrumentation channels operable, take the action shown in Table 3.9-2. Exert best efforts to return the instruments to operable status within 30 days and, if unsuccessful, explain in the next Semiannual Radioactive Effluent Release Report why the inoperability was not corrected in a timely manner.

d. The provisions of Specification 6.9.1.9.b are not applicable.

3. Noble Gases:

a. The dose due to noble gases released in gaseous effluents, from each reactor unit, to areas at and beyond the site boundary (see Figure 5.1-1) shall be limited to the following:

(i) During any calendar quarter: Less than or equal to 5 mrems to the whole body from gamma radiation and less than or equal to 10 mrems to the skin from beta radiation and,

(ii) During any calendar year: Less than or equal to 10 mrems to the whole body from gamma radiation and less than or equal to 20 mrems to the skin from beta radiation.

b. With the calculated dose from radioactive noble gases in gaseous effluents exceeding any of the above limits, in lieu of a Licensee Event Report, prepare and submit to the Commission within 30 days, pursuant to Specification 6.9.2, a Special Report that identifies the causes(s) for exceeding the limit(s) and defines the corrective actions that have been taken to reduce the releases and the proposed corrective actions to be taken to assure that subsequent releases will be in compliance with the above limits.

4. Radioiodines, Radioactive Material in Particulate Form, and Radionuclides Other Than Noble Gases:

a. The dose to a member of the public from iodine-131, tritium, and all radionuclides in particulate form with half-lives greater than 8 days in gaseous effluents released, from each reactor unit, to areas at and beyond the site boundary (see Figure 5.1-1) shall be limited to the following:

(i) During any calendar quarter: Less than or equal to 7.5 mrems to any organ and,

(ii) During any calendar year: Less than or equal to 15 mrems to any organ.

b. With the calculated dose from the release of iodine-131, tritium, and radionuclides in particulate form with half lives greater than 8 days, in gaseous effluents exceeding any of the above limits, in lieu of a Licensee Event Report, prepare and submit to the Commission within 30 days, pursuant to Specification 6.9.2, a Special Report that identifies, the causes(s) for exceeding the limit and defines the corrective actions that have been taken to reduce the releases and the proposed corrective actions to be taken to assure that subsequent releases will be in compliance with the above limits.

5. Gaseous Waste Treatment System:

a. The gaseous radwaste treatment system and the ventilation exhaust treatment system shall be used to reduce radioactive materials in gaseous waste prior to their discharge when the projected gaseous effluent air doses due to gaseous effluent releases, from each reactor unit, to areas at and beyond the site boundary (see Figure 5.1-1) would exceed 0.2 mrem for gamma radiation and 0.4 mrem for beta radiation in a 31 day period. The ventilation exhaust treatment system shall be used to reduce radioactive materials in gaseous waste prior to their discharge when the projected doses due to gaseous effluent releases, from each reactor unit, to areas at and and beyond the site boundary (see Figure 5.1-1) would exceed 0.3 mrem to any organ in a 31 day period.

b. With gaseous waste being discharged without treatment and in excess of the above limits, in lieu of a Licensee Event Report, prepare and submit to the Commission within 30 days, pursuant to Specification 6.9.2, a Special Report that includes the following information:

(i) Explanation of why gaseous radwaste was being discharged without treatment, identification of any inoperable equipment or subsystems, and the reason for the inoperability.

(ii) Action(s) taken to restore the inoperable equipment to operable status, and

(iii) Summary description of action(s) taken to prevent a recurrence.

6. Explosive Gas Mixture:

a. The concentration of oxygen in the waste gas holdup system shall be limited to less than or equal to 2% by volume whenever the hydrogen concentration exceeds 4% by volume.

b. With the concentration of oxygen in the waste gas holdup system greater than 2% by volume but less than or equal to 4% by volume, reduce the oxygen concentration to the above limits within 48 hours.

c. With the concentration of oxygen in the waste gas holdup system greater than 4% by volume and the hydrogen concentration greater than 2% by volume, immediately suspend all additions of waste gases to the system and reduce the concentration of oxygen to less than or equal to 2% by volume without delay.

7. Waste Gas Decay Tanks:

a. The quantity of radioactivity contained in each gas storage tank shall be limited to less than or equal to 29,761 curies noble gases (considered as Xe-133).

b. With the quantity of radioactive material in any gas storage tank exceeding the above limit, immediately suspend all additions of radioactive material to the tank and within 48 hours reduce the tank contents to within the limit.

C. URANIUM FUEL CYCLE DOSE COMMITMENT:

1. The annual (calendar year) dose or dose commitment to any member of the public due to releases or radioactivity and to radiation from uranium fuel cycle sources shall be limited to less than or equal to 25 mrems to the total body or any organ, except the thyroid, which shall be limited to less than or equal to 75 mrems.

2. With the calculated doses from the releases of radioactive materials in liquid or gaseous effluents exceeding twice the limits of Specification 3.9.A.3.a(i), 3.9.A.3.a(ii) 3.9.B.3.a(i), 3.9.B.3.a(ii) 3.9.B.4.a(i), 3.9.B.4.a(ii). Calculations should be made including direct radiation contributions from the reactor units and from outside storage tanks to determine whether the above limits of Specification 3.9.C have been exceeded. If such is the case in lieu of a Licensee Event Report, prepare and submit to the Commission within 30 days, pursuant to Specification 6.9.2, a Special Report that defines the corrective action to be taken to reduce subsequent releases to prevent recurrence of exceeding the above limits and includes the schedule for achieving conformance with the above limits. This Special Report, as defined in 10 CFR Part 20.405c, shall include an analysis that estimates the radiation dose to a member of the public from uranium fuel cycle sources, including all effluent pathways and direct radiation, for the calendar year that includes the releases(s) covered by this report. It shall also describe levels of radiation and concentrations of radioactive materials involved, and the cause of the exposure levels or concentrations. If the estimated dose(s) exceeds the above limits, and if the release condition resulting in violation of 40 CFR Part 190 has not already been corrected, the Special Report shall include a request for a variance in accordance with the provisions of 40 CFR Part 190. Submittal of the report is considered a timely request, and a variance is granted until staff action on the request is complete.

D. SOLID RADIOACTIVE WASTE:

1. The solid radwaste system shall be used in accordance with a process control program to process wet radioactive wastes to meet shipping and burial ground requirements.

2. With the provisions of the process control program not satisfied, suspend shipments of defectively processed or defectively packaged solid radioactive wastes from the site.

Basis

It is expected that the release of radioactive materials in liquid and gaseous effluents to unrestricted areas will not exceed the concentration limits specified in 10 CFR Part 20 and should be as low as is reasonably achievable (ALARA) in accordance with the requirement of 10 CFR 50.36a. While providing reasonable assurance that the design objectives will be met, these Specifications permit the flexibility of operation, compatible with considerations of health and safety, to ensure that the public is provided a dependable source of power under unusual operating conditions which may temporarily result in releases higher than the design objective levels but still within the concentration limits specified in 10 CFR Part 20. It is expected that using this operational flexibility under unusual

operation conditions, and exerting every effort to keep levels of radioactive materials in liquid and gaseous wastes as low as is reasonably achievable, the annual release will not exceed a small fraction of the concentration limits specified in 10 CFR Part 20.

The design objectives have been developed based on operating experience taking into account a combination of variables including defective fuel, primary system leakage, primary to secondary system leakage, steam generator blowdown and the performance of the various waste treatment systems, and are consistent with 10 CFR Part 50.36a.

The Indian Point site is a multiple-unit site. There exist shared radwaste treatment systsms and shared effluent release points. Where site limits must be met, the effluents of all the units will be combined to determine site compliance. For instances where unit-specific information may be required for radwaste processed or released via s shared system, the effluents shall be proportioned among the units sharing the system(s) in accordance with methods and the agreements set forth in the ODCM.

This specification is provided to ensure that the concentration of radioactive materials released in liquid waste effluents to unrestricted areas will be less than the concentration levels specified in 10CFR Part 20, Appendix B, Table II, Column 2. This limitation provides additional assurance that the levels of radioactive materials in bodies of water in unrestricted areas will result in exposures within (1) the Section II.A design objectives of Appendix I, 10 CFR Part 50, to a member of the public and (2) the limits of 10 CFR Part 20.106(e) to he population. The concentration limit for dissolved or entrained noble gases is based upon the assumption that Xe-133 is the controlling radioisotope and its MPC in air (submersion) was converted to an equivalent concentration in water using the methods described in International Commission on Radiological Protection (ICRP) Publication 2.

This specification applies to the release of liquid effluents from Indian Point Units Nos. 1 and 2.

The radioactive liquid effluent instrumentation, required operable by specification 3.9.A.2, is provided to monitor and control, as applicable, the releases of radioactive materials in liquid effluents during actual or potential releases. The alarm/trip setpoints for these instruments shall be calculated in accordance with methods set forth in the ODCM to ensure that the alarm/trip will occur prior to exceeding the limits of Table II of Appendix "B" to 10 CFR Part 20. The operability and use of this instrumentation is consistent with the requirements of General Design Criteria 60,63 and 64 of Appendix A to 10 CFR Part 50. The purpose of tank level indicating devices is to assure the detection and control of leaks that if not controlled could potentially result in the transport of radioactive materials to unrestricted areas.

This specification is provided to implement the requirements of Sections II.A, III.A and IV.A of Appendix I, 10 CFR Part 50. The Limiting Condition for Operation implements the guides set forth in Section II.A of Appendix I. The action statements provide the required operating flexibility and at the same time implement the guides set forth in Section IV.A of Appendix I to assure that the releases of radioactive material in liquid effluents will be kept " as low as reasonably achievable." Also, for fresh water sites to unrestricted area with drinking water supplies that can be potentially affected by plant operations, there is reasonable assurance that the operation of the facility will not result in radionuclide concentration in the finished drinking water that are in excess of the requirements of 40 CFR Part 141. The dose calculation methodology and parameters in the ODCM implement the requirements in Section III.A of Appendix I that conformance with the guides of Appendix I be shown by calculational procedures based on models and data, such that the actual exposure of a member of the public through appropriate pathways is unlikely to be substantially underestimated. The equations specified in the ODCM for calculating the doses due to the actual release rates of radioactive materials in liquid effluents are consistent with the methodology provided in Regulatory Guide 1.109, "Calculation of Annual Doses to Man from Routine Releases of Reactor Effluents for the Purpose of Evaluating Compliance with 10 CFR Part 50, Appendix I," Revision 1, October 1977 and Regulatory Guide 1.113, "Estimating Aquatic Dispersion of Effluents from Accidental and Routine Reactor Releases for the Purpose of Implementing Appendix I," April 1977.

In addition to the limiting conditions for operation listed under specification 3.9.A.3.a, the reporting requirements of specification 3.9.A.3.b specify that the licensee shall identify the cause whenever the dose from the release of radioactive materials in liquid waste effluent exceeds the technical specification limits and describe the proposed program of action to reduce such releases to design objective levels on a timely basis.

Specification 3.9.A.4 requires that the licensee maintain and operate appropriate equipment installed in the liquid waste systems, when necessary, to provide assurance that the releases of radioactive materials in liquid effluents will be kept "as low as reasonably achievable". This specification implements the requirements of 10 CFR 50.36a, General Design Criterion 60 of Appendix A to 10 CFR Part 50 and the design objective given in Section II.D of Appendix I to 10 CFR Part 50. The specified limits governing the use of appropriate portions of the liquid radwaste treatment system were specified as a suitable fraction of the dose design objectives set forth in Section II.A of Appendix I. 10 CFR Part 50, for liquid effluents.

The tanks listed in Specification 3.9.A.5 include outdoor tanks that are not surrounded by liners, dikes, or walls capable of holding the tank contents and that do not have tank overflows and surrounding area drains connected to the liquid radwaste treatment system.

Restricting the quantity of radioactive material contained in the specified tanks, provides assurance that in the event of an uncontrolled release of any such tank's contents, the resulting concentration would be less than the limits of 10 CFR 20 Appendix B, Table II, Column 2, at the nearest potable water supply and the nearest surface water supply in an unrestricted area.

Specification 3.9.B.1 is provided to ensure that the dose at any time and beyond the site boundary from gaseous effluents from all units on the site will be within the annual dose limits of 10 CFR Part 20 for unrestricted areas. The annual dose limits are the doses associated with the concentration of 10 CFR Part 20, Appendix B, Table II, Column I. These limits provide reasonable assurance that radioactive material discharged in gaseous effluents will not result in the exposure of a member of the public in an unrestricted area, to annual average concentration exceeding the limits specified in Appendix B, Table II of 10 CFR Part 20 (10 CFR Part 20.106(b)). For members of the public who may at times be within the site boundary, the occupancy of that member of the public will usually be sufficiently low to compensate for any increase in the atmosphere diffusion factor above that for the site boundary. The specified release rate limits restrict, at all times, the corresponding gamma and beta dose rates above background to a member of the public at or beyond the site boundary to less than or equal to 500 mrems/year to the total body or to less than or equal to 3000 mrem/year to the skin. These release rate limits also restrict, at all times, the corresponding thyroid dose rate above background via the inhalation pathway to less than or equal to 1500 mrems/year.

This specification applies to the release of gaseous effluents from Indian Point Units Nos. 1 and 2.

The radioactive gaseous effluent instrumentation, required operable by specification 3.9.B.2, is provided to monitor and control, as applicable, the releases of radioactive materials in gaseous effluents. The alarm/trip setpoints for these instruments shall be calculated and adjusted in accordance with the methodology and parameters in the ODCM to ensure that the alarm/trip will occur prior to exceeding the limits of 10 CFR Part 20. This instrumentation also includes provisions for monitoring (and controlling) the concentrations of potentially explosive gas mixtures in the waste gas holdup system. The operability and use of this instrumentation is consistent with the requirements of General Design criteria 60, 63 and 64 Appendix A to 10 CFR Part 50.

Specification 3.9.B.3 is provided to implement the requirements of Sections II.B, III.A and IV.A of Appendix I, 10CFR Part 50. The Limiting Condition for Operation implements the guides set forth in Section II.B of Appendix I. The action statements provide the required operating flexibility and at the same time implement the guides set forth in Section IV.A of Appendix I to assure that the releases of radioactive material in gaseous effluents to unrestricted areas will be kept "as low as is reasonably achievable." The Surveillance Requirements implement the requirements in Section III.A of Appendix I that conformance with the guides of Appendix I be shown by calculational procedures bases on models and data such that the actual exposure of a member of the public through appropriate pathways is unlikely to be substantially underestimated. The dose calculation methodology and parameters established in the ODCM for calculating the doses due to the actual release rates of radioactive noble gases in gaseous effluents are consistent with the methodology provided in Regulatory Guide 1.109, "Calculation of Annual Doses to Man from Routine Releases of Reactor Effluents for the Purpose of Evaluating Compliance with 10 CFR Part 50, Appendix I," Revision 1, October 1977 and Regulatory Guide 1.111, "Methods for Estimating Atmospheric Transport and Dispersion of Gaseous Effluents in Routine Releases from Light-Water Cooled Reactors," Revision 1, July 1977. The ODCM equations provided for determining the doses at and beyond the site boundary are based upon the historical average atmospheric conditions.

This specification applies to the release of gaseous effluents from Indian Point Units Nos. 1 and 2.

Specification 3.9.B.4 is provided to implement the requirements of Section II.C, III.A and IV.A of Appendix I, 10 CFR Part 50. The Limiting Conditions for Operation are the guides set forth in Section II.C of Appendix I. The action statements provide the required operating flexibility and at the same time implement the guides set forth in Section IV.A of Appendix I to assure that the releases of radioactive materials in gaseous effluents to unrestricted areas will be kept "as low as reasonably achievable." The ODCM calculational methods specified in the Surveillance Requirements implement the requirements in Section III.A of Appendix I that conformance with the guides of Appendix I be shown by calculational procedures based on models and data, such that the actual exposure of a member of the public through appropriate pathways is unlikely to be substantially underestimated. The ODCM calculational methodology and parameters for calculating the doses due to the actual release rates of the subject materials are consistent with the methodology provided in Regulatory Guide 1.109, "Calculation of Annual Doses to Man from Routine Releases of Reactor Effluents for the Purpose of Evaluating Compliance with 10 CFR Part 50, Appendix I, "Revision 1, October 1977 and Regulatory Guide 1.111, "Methods for Estimating Atmospheric Transport and Dispersion of Gaseous Effluents in Routine Releases from Light-Water-Cooled Reactors," Revision 1, July 1977. These equations also provide for determining the actual doses based upon the historical average atmospheric conditions. The release rate

specifications for iodine-131, tritium, and radionuclides in particulate form with half lives greater than 8 days are dependent upon the existing radionuclide pathways to man, in the areas at and beyond the site bouncary. The pathways that were examined in the development of these calculations were: (1) individual inhalation of airborne radionuclides, (2) deposition of radionuclides onto green leafy vegetation with subsequent consumption by man (3) deposition onto grassy areas where milch animals and meat producing animals graze with consumption of the milk and meat by man, and (4) deposition on the ground with subsequent exposure of man.

This specification applies to the release of gaseous effluents from Indian Point Units Nos. 1 and 2.

Specification 3.9.B.5 requires that the appropriate portions of these systems be used, when specified, to provide reasonable assurance that the releases of radioactive materials in gaseous effluents will be kept "as low as reasonably achievable". This specification implements the requirements of 10 CFR Part 50.36a, General Design Criterion 60 of Appendix A to 10 CFR Part 50, and the design objectives given in Section II.D of Appendix I to 10 CFR Part 50. The specified limits governing the use of appropriate portions of the systems were specified as a suitable fraction of the dose design objectives set forth in Sections II.B and II. C of Appendix I, 10 CFR Part 50, for gaseous effluents.

This specification applies to the release of gaseous effluents from Indian Point Units Nos. 1 and 2.

Specification 3.9.B.6 is provided to ensure that the concentration of potentially explosive gas mixtures contained in the waste gas holdup system is maintained below the flammability limits of hydrogen and oxygen. (Automatic control features are included in the system to prevent the hydrogen and oxygen concentrations from reaching these flammability limits. These automatic control features include isolation of the source of hydrogen and/or oxygen, automatic diversion to recombiners, or injection of dilutants to reduce the concentration below the flammability limits.) Maintaining the concentration of hydrogen and oxygen below their flammability limits provides assurance that the releases ofradioactive materials will be controlled in conformance with the requirements of General Design Criterion 60 of Appendix A to 10 CFR Part 50.

The tanks included in specification 3.9.B.7 are those tanks for which the quantity of radioactivity contained is not limited directly or indirectly by another Technical Specification to a quantity that is less than the quantity that provides assurance that in the event of an uncontrolled release of the tank's contents, the resulting total body exposure to a member of the public at the nearest site boundary will not exceed 0.5 rem in an event of 2 hours duration.

Restricting the quantity of radioactivity contained in each gas storage tank provides assurances that in the event of an uncontrolled release of the tank's contents, the resulting total body exposure to a member of the public at the nearest site boundary will not exceed 0.5 rem. This is consistent with Branch Technical Position ETSB 11-5 in NUREG-0800, July 1981.

Specification 3.9.C is provided to meet the dose limitation of 40 CFR Part 190 that have been incorporated into 10 CFR Part 20 by 46 FR 18525. The specification requires the preparation and submittal of a Special Report whenever the calculated doses from plant generated radioactive effluents and direct radiation exceed 25 mrems to the total body or any organ, except the thyroid, which shall be limited to less than or equal to 75 mrems.

For sites containing up to 4 reactors, it is highly unlikely that the resultant dose to a member of the public will exceed the dose limits of 40 CFR Part 190 if the individual reactors remain within twice the dose design objectives of Appendix I, and if direct radiation doses from the reactor units and outside storage tanks are kept small. The Special Report will describe a course of action that should result in the limitation of the annual dose to a member of the public to within the 40 CFR Part 190 limits. For the purposes of the Special Report, it may be assumed that the dose commitment to the member of the public from other uranium fuelcycle sources is negligible, with the exception that dose contribution from other nuclear fuel cycle facilities at the same site or within a radius of 8 km must be considered. If the dose to any member of the public is estimated to exceed the requirements of 40 CFR Part 190, the Special Report with a request for a variance (provided the release conditions resulting in violation of 40 CFR Part 190 have not already been corrected), in accordance with the provisions of 40 CFR Part 190.11 and 10 CFR Part 20.405c, is considered to be a timely request and fulfills the requirements of 40 CFR Part 190 until NRC staff action is completed. The variance only relates to the limits of 40 CFR Part 190, and does not apply in any way to the other requirements for dose limitation of 10 CFR Part 20, as addressed in Specifications 3.11.1.1 and 3.11.2.1. An individual is not considered a member of the public during any period in which he/she is engaged in carrying out any operation that is part of the nuclear fuel cycle.

Specification 3.9.D implements the requirements of 10 CFR Part 50.36a and General Design Criterion 60 of Appendix A to 10 CFR Part 50. The process parameters included in establishing the process control program may include, but are not limited to waste type, waste pH, waste/liquid/solidification agent/catalyst ratios, waste oil content, waste principal chemical constitutents, and mixing and curing times.

Restricting the quantity of radioactivity contained in each gas storage tank provides assurances that in the event of an uncontrolled release of the tank's contents, the resulting total body exposure to a member of the public at the nearest site boundary will not exceed 0.5 rem. This is consistent with Branch Technical Position ETSB 11-5 in NUREG-0800, July 1981.

Specification 3.9.C is provided to meet the dose limitation of 40 CFR Part 190 that have been incorporated into 10 CFR Part 20 by 46 FR 18525. The specification requires the preparation and submittal of a Special Report whenever the calculated doses from plant generated radioactive effluents and direct radiation exceed 25 mrems to the total body or any organ, except the thyroid, which shall be limited to less than or equal to 75 mrems.

For sites containing up to 4 reactors, it is highly unlikely that the resultant dose to a member of the public will exceed the dose limits of 40 CFR Part 190 if the individual reactors remain within twice the dose design objectives of Appendix I, and if direct radiation doses from the reactor units and outside storage tanks are kept small. The Special Report will describe a course of action that should result in the limitation of the annual dose to a member of the public to within the 40 CFR Part 190 limits. For the purposes of the Special Report, it may be assumed that the dose commitment to the member of the public from other uranium fuelcycle sources is negligible, with the exception that dose contribution from other nuclear fuel cycle facilities at the same site or within a radius of 8 km.must be considered. If the dose to any member of the public is estimated to exceed the requirements of 40 CFR Part 190, the Special Report with a request for a variance (provided the release conditions resulting in violation of 40 CFR Part 190 have not already been corrected), in accordance with the provisions of 40 CFR Part 190.11 and 10 CFR Part 20.405c, is considered to be a timely request and fulfills the requirements of 40 CFR Part 190 until NRC staff action is completed. The variance only relates to the limits of 40 CFR Part 190, and does not apply in any way to the other requirements for dose limitation of 10 CFR Part 20, as addressed in Specifications 3.11.1.1 and 3.11.2.1. An individual is not considered a member of the public during any period in which he/she is engaged in carrying out any operation that is part of the nuclear fuel cycle.

Specification 3.9.D implements the requirements of 10 CFR Part 50.36a and General Design Criterion 60 of Appendix A to 10 CFR Part 50. The process parameters included in establishing the process control program may include, but are not limited to waste type, waste pH, waste/liquid/solidification agent/catalyst ratios, waste oil content, waste principal chemical constitutents, and mixing and curing times.

TABLE 3.3-4

RADIOACTIVE LIQUID EFFLUENT MONITORING INSTRUMENTATION

	INSTRUMENT	MINIMUM CHANNELS OPERABLE*	ACTION
1.	GROSS RADIOACTIVITY MONITORS PROVIDING ALARM AND AUTOMATIC TERMINATION OF RELEASE		
	a. Liquid Radwaste Effluent Line	(1)	1
	b. Steam Generator Blowdown Effluent Line	(1)	2
2.	GROSS BETA OR GAMMA RADIOACTIVITY MONITORS PROVIDING ALARM BUT NOT PROVIDING AUTOMATIC TERMINATION OF RELEASE		
	a. Service water System Effluent Line	(1)	3
	b. Unit 1 - Secondary Boiler Blowdown Purification System(SBBPS) Effluent	(1)	3
3.	FLOW RATE MEASUREMENT DEVICES		
	a. Liquid Radwaste Effluent Line	(1)	4
	b. Steam Generator Blowdown Effluent Line	(1)	4
4.	TANK LEVEL INDICATING DEVICES**	(1)	5
	a. 13 Waste Distallate Storage Tank	(1)	5
	b. 14 Waste Distallate Storage Tank	(1)	5
	c. Primary Water Storage Tank	(1)	5
	d. Refueling Water Tank	(1)	5
	e. 21 Monitor Tank	(1)	5
	f. 22 Monitor Tank	(1)	5
	g. 23 Monitor Tank	(1)	5

*During release by the pathway, channels shall be operable and in service during such release on a continuous, uninterrupted basis. Except that outages are permitted, within the time frame and limitations of the specified action, for the purpose of maintenance or required tests, checks and calibration.

**Tanks included in this specification are those outdoor tanks that are not surrounded by liners, dikes, or walls capable of holding the tank contents and do not have tank overflows and surrounding area drains connected to the liquid radwaste treatment system.

TABLE 3.9-1 (Continued)

TABLE NOTATION

ACTION 1 - With the number of channels operable less than required by the Minimum Channels operable requirement, effluent releases may continue provided that prior to initiating a release:

a. At least two independent samples are analyzed in accordance with Specification 4.10.A, and

b. At least two technically qualified members of the Facility Staff independently verify the release rate calculations and discharge line valving;

Otherwise, suspend release of radioactive effluents via this pathway.

ACTION 2 - With the number of channels operable less than required by the Minimum Channels operable requirement, effluent releases via this pathway may continue provided grab samples are analyzed for gross radioactivity (beta or gamma) at a lower limit of detection of at least 5×10^{-7} microcurie/ml;

a. At least once per 12 hours when the specific activity of the secondary coolant is greater than 0.01 microcurie/gram dose equivalent I-131.

b. At least once per 24 hours when the specific activity of the secondary coolant is less than or equal to 0.01 microcurie/gram dose equivalent I-131.

ACTION 3 - With the number of channels operable less than required by the Minimum Channels operable requirement, effluent releases via this pathway may continue provided that, at least once per 12 hours, grab samples are collected and analyzed for gross radioactivity (beta or gamma) at a lower limit of detection of at least 5×10^{-7} microcurie/ml.

ACTION 4 - With the number of channels operable less than required by the Minimum Channels operable requirement, effluent releases via this pathway may continue provided the flow rate is estimated at least once per 4 hours during actual releases. Pump performance curves generated in situ may be used to estimate flow.

ACTION 5 - With the number of channels operable less than required by the Minimum Channels operable requirement, liquid additions to this tank may continue provided the tank liquid level is estimated during all liquid additions to the tank.

TABLE 3.9-2

RADIOACTIVE GASEOUS EFFLUENT MONITORING INSTRUMENTATION

	INSTRUMENT	MINIMUM CHANNELS OPERABLE	APPLICABILITY	ACTION
1.	WASTE GAS HOLDUP SYSTEM			
	a. Noble Gas Activity Monitor - Providing Alarm.	(1)	**	1
2.	WASTE GAS HOLDUP SYSTEM EXPLOSIVE GAS MONITORING SYSTEM			
	a. Hydrogen Monitor	(1)	**	4
	b. Hydrogen or Oxygen Monitor	(1)	**	4
3.	CONDENSER EVACUATION SYSTEM			
	a. Noble Gas Activity Monitor	(1)	*	3
4.	PLANT VENT			
	a. Noble Gas Activity Monitor	(1)	* and **	6
	b. Iodine Sampler	(1)	*	5
	c. Particulate Sampler	(1)	*	5
	d. Flow Rate Monitor	(1)	*	2
	e. Sampler Flow Rate Monitor	(1)	*	2
5.	STACK VENT - UNIT 1			
	a. Noble Gas Activity Monitor	(1)	*	3
	b. Iodine Sampler	(1)	*	5
	c. Particulate Sampler	(1)	*	5
	d. Flow Rate Monitor	(1)	*	2
	e. Sampler Flow Rate Monitor	(1)	*	2

Amerndment No. 90

TABLE 3.9-2 (Continued)

TABLE NOTATION

* Channels shall be operable and in service on a continuous basis during release via this pathway, except that outages are permitted, within the time frame of the specified action for the purpose of maintenance and performance of required tests, check and calibrations.

** During waste gas holdup system operation (treatment for primary system offgases.)

ACTION 1 - With the number of channels operable less than required by the Minimum Channels Operable requirement, the radioactive content of the receiving gas decay tank shall be determined daily to ensure compliance with 3.9.B.1.a

ACTION 2 - With the number of channels operable less than required by the Minimum Channels Operable requirement, effluent releases via this pathway may continue provided the flow rate is estimated at least once per 4 hours.

ACTION 3 - With the number of channels operable less than required by the Minimum Channels Operable requirement, effluent releases via this pathway may continue provided grab samples are taken at least once per 12 hours and these samples are analyzed for gross activity within 24 hours.

ACTION 4 - With the number of channels operable less than required by the Minimum Channels Operable requirement, operation of this system may continue provided grab samples are taken and analyzed (1) every 4 hours during degassing operations, and (2) dailly during other operations.

ACTION 5 - With the number of channels operable less than required by the Minimum Channels Operable requirement, effluent releases via the affected pathway may continue provided samples are continuously collected with auxiliary sampling equipment as required in Table 4.10-3.

ACTION 6 - With the number of channels operable less than required by the Minimum Channels Operable requirement, the contents of the tank(s) may be released to the environment provided that prior to initiating the release:

a. At least two independent samples of the tank's contents are analyzed, and
b. At least two technically qualified members of the Facility Staff independently verify the release rate calculations and discharge valve lineup;

Otherwise, suspend release of radioactive effluents from waste gas holdup system.

Amendment No. 90

3.15 METEOROLOGICAL MONITORING SYSTEM

Applicability

This specification applies to the operability of the meteorological monitoring system.

Objective

To define limits and conditions for the measurement of meteorological conditions at the site.

Specifications

A. The meteorological monitoring instrumentation channels shown in Table 3.15-1 shall be operable at all times with indication of the tabulated parameters available in the control room.

B. With one or more of the required meteorological monitoring channels inoperable for more than seven(7) consecutive days, prepare and submit to the Commission within the next 10 days, pursuant to specification 6.9.2.i, a Special Report, in lieu of any other report, outlining the cause of the malfunction(s) and the plans for restoring the channel(s) to operable status.

Basis

Operability of the meteorological monitoring system instrumentation ensures that sufficient meteorological data at the site in available for estimating potential radiation doses to the public as a result of routine or accidental releases of radioactive materials to the atmosphere. This capability is required to evaluate the need for initiating protective measures to protect the health and safety of the public and is consistent with the recommendations of Regulatory Guide 1.23, Rev. 0.

TABLE 3.15.-1
METEOROLOGICAL MONITORING INSTRUMENTATION

INSTRUMENT	INSTRUMENT MINIMUM ACCURACY	MINIMUM OPERABLE
1. WIND SPEED:		
a. Nominal Elev. 10m*	± 0.5 mph**	1
b. Nominal Elev. 60m	± 0.5 mph**	1
c. Nominal Elev. 122m	± 0.5 mph**	1
2. WIND DIRECTION:		
a. Nominal Elev. 10m*	± 5°	1
b. Nominal Elev. 60 m	± 5°	1
c. Nominal Elev. 122m	± 5°	1
3. AIR TEMPERATURE DIFFERENTIAL (DELTA T):		
a. Nominal Elev. 60 - 10m	± 0.1° C	1
b. Nominal Elev. 122 - 10m	± 0.1° C	1

*10m as measured by the primary or back up meteorological tower.
**Starting speed of anemometer shall be < 1 mph.

TABLE 4.1-1

MINIMUM FREQUENCIES FOR CHECKS, CALIBRATION- AND TESTS OF INSTRUMENT CHANNELS

1.	Nuclear Power Range	S	D (1) M* (3)	M (2)	1) Heat balance calibrabration 2) Signal to Δ T; bistable action (permissive, rod stop, trips) 3) Upper and lower chambers for axial off-set.
2.	Nuclear Intermediate Range	S (1)	N.A.	S/U**(2)	1) Once/shift when service Log level; bistable action (permissive, rod stop, trip)
3.	Nuclear Source Range	S (1)	N.A.	S/U**(2)	1) Once/shift when in service 2) Bistable action (alarm, trip)
4.	Reactor Coolant Temperature	S	R	M (1)	1) Overtemperature - ΔT 2) Overpower - ΔT
5.	Reactor Coolant Flow	S	R	M	
6.	Pressurizer Water Level	S	R	M	
7.	Pressurizer Pressure (High & Low	S	R	M	
8.	6.9 Kv Voltage & Frequency	N.A.	R	M	Reactor Protection circuits only
9.	Analog Rod Position	S	R	M	

*By means of the moveable incore detector system. The January 1976 scheduled measurements with the moveable incore detector system may be delayed until February 6, 1976.

**Prior to each reactor startup if not done previous week.

TABLE 4.1-1 (continued)

	Channel Description	Check	Calibrate	Test	Remarks
10.	Rod Position Bank Counters	S	N.A.	N.A.	With analog rod position
11.	Steam Generator Level	S	R	M	
12.	Charging Flow	N.A.	R	N.A.	
13.	Residual Heat Removal Pump Flow	N.A.	R	N.A.	
14.	Boric Acid Tank Level	W	R	N.A.	Bubbler tube rodded during calibration
15.	Refueling Water Storage Tank Level	W	R	N.A.	
16.	Boron Injection Tank Level	W	R	R	
17.	Volume Control Tank Level	N.A.	R	N.A.	
18.	(a) Containment Pressure	D	R	M	Wide range
	(b) Containment Pressure	S	R	M	Narrow range
19.	Process and Area Radiation Monitoring Systems*	D	R	M	
20.	Boric Acid Make-up Flow Channel	N.A.	R	N.A.	
21A.	Containment Sump and Recirculation Sump Level (Discrete)	S	R	R	Discrete Level Indication System
21B.	Containment Sump, Recirculation Sump and Reactor Cavity Level Continuous)	S	R	R	Continuous Level Indication Systems
21C.	Reactor Cavity Level Alarm	N.A.	R	R	Level Alarm System
21D.	Containment Sump Discharge Flow	S	R	M	Flow Monitor
21E.	Containment Fan Cooler Condensate Flow	S	R	M	Monthly visual inspection of condensate weirs.

*Except those systems included in Tables 4.10-2 and 4.10-4

4.10 Radioactive Effluents

Applicability

The specification applies to the surveillance requirements associated with facility radioactive effluents.

Objective

To ensure that the releases of radioactive materials to the environs are maintained as low as is reasonably achievable (ALARA) and within allowable regulatory limits.

Specifications

A. Radioactive Liquid Effleunts

Radioactive liquid wastes shall be sampled and analyzed according to the sampling and analysis program of Table 4.10-1.

The results of the radioactivity analyses shall be used in accordance with the methodology and parameters in the ODCM to ensure that the concentrations at the point of release are maintained within the limits of Specification 3.9.A.1.

Each radioactive liquid effluent monitoring instrumentation channel shall be demonstrated operable by performance of the channel check, source check, channel calibration and channel function test operations at the frequencies shown in Table 4.10-2.

Cumulative dose contribution from liquid effluents for the current calendar quarter and the current calendar year shall be determined in accordance with the methodology and parameters in the ODCM at least once per 31 days.

Doses due to liquid releases to unrestricted aeasS shall be projected at least once per 31 days in accordance with the methodology and parameters in the ODCM.

The quantity of radioactive material contained in each of the tanks listed in Specification 3.9.A.5 shall be determined to be within the limit of Specification 3.9.A.5.a by analyzing a representative sample of the tank's contents at least once per month when radioactive materials are being added to the tank.

B. Radioactive Gaseous Effluents:

1. The dose rate due to noble gases in gaseous effluents shall be determined to be within the limits of specification 3.9.B.1.a.(i) in accordance with the methodology and parameters in the ODCM.

2. The dose rate due to iodine-131, tritium, and all radionuclides in particulate form with half lives greater than 8 days in gaseous effluents shall be determined to be within the limits of specification 3.9.B.1.a.(ii) in accordance with the methodology and parameters in the ODCM by obtaining representative samples and performing analyses in accordance with the sampling and analysis program specified in Table 4.10.-3.

3. Each radioactive gaseous effluent monitoring instrumentation channel shall be demonstrated operable by performance of the channel check, source check, channel calibration and channel functional test operations at the frequencies shown in Table 4.10-4.

4. Cumulative dose contribution for the current calendar quarter and current calendar year for noble gases shall be determined in accordance with the methodology and parameters in the ODCM at least once per 31 days.

5. Cumulative dose contribution for the current calendar quarter and current calendar year for iodine -131, tritium, and radionuclides in particulate form with half lives greater than 8 days shall be determined in accordance with the methodology and parameters in the ODCM at least once per 31 days.

6. Doses due to gaseous releases from each reactor unit to areas at and beyond the site boundary shall be projected at least once per 31 days in accordance with the methodology and parameters in the ODCM.

7. The concentration of hydrogen and oxygen in the waste gas holdup system shall be determined to be within the limits of specification 3.9.B.6 by continuously monitoring the waste gases in the waste gas holdup system with the hydrogen and oxygen monitors required operable by Table 3.9.2 of Specification 3.9.B.2.a.

8. The quantity of radioactive material contained in each gas storage tank shall be determined to be within the limit of specification 3.9.B.7 at least once per 24 hours when radioactive materials are being added to the tank.

C. Uranium Fuel Cycle Dose Committment:

1. Cumulative dose contributions from liquid and gaseous effluents shall be determined in accordance with Specifications 4.10.A.4, 4.10.B.4, and 4.10.B.5, and in accordance with the methodology and para meters in the ODCM.

2. Cumulative dose contributions from direct radiation from the reactor units and from radwaste storage tanks shall be determined in accordance with the methodology and parameters in the ODCM. This requirement is applicable only under conditions set forth in Specification 3.9.C.2.

D. Solid Radioactive Waste:

1. The process control program shall be used to verify the solidification of test specimens representative of wet waste.

2. For each class of solid waste (as defined by 10 CFR Part 61) shipped offsite during the report period; the following information shall be recorded:

a. Container volume,

b. Total curie quantity (specify whether determined by measurement or estimate),

c. Principal radionuclides (specify whether determined by measurement or estimate),

d. Source of waste and processing employed (e.g., dewatered spent resin, compacted dry waste, evaporator bottoms),

e. Type of container (e.g., LSA, Type A, Type B, Large Quantity), and

f. Solidification agent or absorbent (e.g., cement, urea formaldehyde).

E. Routine Reporting Requirements:

1. The results of the surveillance performed pusuant to specifications 4.10.A and 4.10.B above will be included in the Semiannual Radioactive Effluent Release Report to the extent required by specification 6.9.1.6. In addition, this Report shall include the information recorded pursuant to specification 4.10.D above during the report period.

Basis

The sampling and monitoring requirements specified in specification 4.10.A and 4.10.B provide assurance that radioactive materials released in liquid and gaseous wastes are properly controlled and monitored in conformance with the requirements of General Design Criteria 60 and 64 of Appendix A to 10 CFR Part 50. These requirements provide the data for the licensee and the Commission to evaluate the performance of the plants relative to radioactive waste effluents released to the environment.

Specification 4.10.B excludes monitoring the turbine building ventilation exhaust since this release is expected to be negligible release point. Many PWR reactors do not have turbine building enclosures. To be consistent in the requirement for all PWR reactors, the monitoring of gaseous releases from turbine building is not required.

Specification 4.10.D specifies the appropriate information to be recorded and maintained regarding offsite shipments of solid radioactive waste.

As referenced in specification 4.10.E, reports on the quantities of liquid, gaseous and solid radioactive materials released from the site are furnished to the Commission in the Semiannual Radioactive Effluent Release Report pursuant to specification 6.9.1.6 and in conformance with USNRC Regulatory Guide 1.21, Revision 1. On the basis of such reports and any additional information the Commission may obtain fromthe licensee or other, the Commission may from time to time, require the licensee to take such action as the Commission deems appropriate.

TABLE 4.10-1

RADIOACTIVE LIQUID WASTE SAMPLING AND ANALYSIS PROGRAM

	Liquid Release Type	Sampling Frequency	Minimum Analysis Frequency	Type of Activity Analysis	Lower Limit of Detection (LLD)[a,g,c] (uCi/ml)
A.	Batch Waste Release Tanks[b]	P Each Batch	P Each Batch	Principal Gamma Emmiters	$5x10^{-7}$
				Mo-99, Ce-144	$5x10^{-6}$
				I-131	$1x10^{-6}$
		P One Batch/M	M	Dissolved and Entrained Gases (Gamma Emitters)	$1x10^{-5}$
		P Each Batch	M Composite[d]	H-3	$1x10^{-5}$
				Gross Alpha	$1x10^{-7}$
		P Each Batch	Q Composite[d]	Sr-89, Sr-90	$5x10^{-8}$
				Fe-55	$1x10^{-6}$
B.	Continous Releases[e]	Composite[d]	W Composite[d]	Principal Gamma Emitters[c]	$5x10^{-7}$
				Mo-99, Ce-144	$5x10^{-6}$
				I-131	$1x10^{-6}$
		M Grab Sample	M	Dissolved and Entrained Gases (Gamma Emitters)	$1x10^{-5}$
		Composite[d]	M Composite[d]	H-3	$1x10^{-5}$
				Gross Alpha	$1x10^{-7}$
		Composite[d]	Q Composite[d]	Sr-89, Sr-90	$5x10^{-8}$
				Fe-55	$1x10^{-6}$

Amendment No. 90

Table 4.10-1

Table Notation

a. The LLD is defined, for purposes of these specifications, as the smallest concentration of radioactive material in a sample that will yield a net count, above systems background, that will be detected with 95% probability with only 5% probability of falsely concluding that a blank observation represents a "real" signal. The LLD shall be determined in accordance with the methodology and parameters in the ODCM. It should be recognized that the LLD is defined as an a priori (before the fact) limit representing the capability of a measurement system and not as an a posteriori (after the fact) limit for a particular measurement.

b. A batch release is the discharge of liquid wastes of a discrete volume. Prior to sampling for analyses, each batch shall be isolated, and then throughly mixed to assure representative sampling. (Steam Generators may be considered a batch release for reporting purposes during shutdown condition).

c. The principal gamma emitters for which the LLD specification applies exclusively are the following radionuclides: Mn-54, Fe-59, Co-58, Co-60, Zn-65, Cs-134, Cs-137, and Ce-141. Other gamma peaks that are identified, together with those of the above nuclides, shall also be analyzed and reported in the Semiannual Radioactive Effluent Release Report pursuant to Specification 6.9.1.6.

d. A composite sample is one in which the quantity of liquid sampled is proportional to the quantity of liquid waste discharged and in which the method of sampling employed results in a specimen that is representative of the liquids released.

e. A continuous release is the discharge of liquid wastes of a nondiscrete volume, e.g., from a volume of a system that has an input flow during the continuous release.

g. When operational or other limitations preclude specific gamma radionuclide analysis in batch releases, the provisions of Regulatory Guide 1.21 (Revision 1), Appendix A, Section C.4 and Appendix A, Section B.

For certain radionuclides with low gamma yield or low energies, or for certain radionuclide mixtures, it may not be possible to measure radionuclides in concentrations near the LLD. Under these circumstances, the LLD may be increased in inverse proportion to the magnitude of the gamma yield (i.e., $5 \times 10^{-7}/I$, where I is the photon abundance expressed as a decimal fraction).

Amendment No. 90

TABLE 4.10-2

RADIOACTIVE LIQUID EFFLUENT MONITORING INSTRUMENTATION SURVEILLANCE REQUIREMENTS

INSTRUMENT	CHANNEL CHECK	SOURCE CHECK	CHANNEL CALIBRATION	CHANNEL FUNCTIONAL TEST
1. GROSS RADIOACTIVITY MONITORS PROVIDING ALARM AND AUTOMATIC TERMINATION OF RELEASE				
a. Liquid Radwaste Effluent Line	D*	P	R(3)	Q(1)
b. Steam Generator Blowdown Effluent Line	D*	M	R(3)	Q(1)
2. GROSS BETA OR GAMMA RADIOACTIVITY MONITORS PROVIDING ALARM BUT NOT PROVIDING AUTOMATIC TERMINATION OF RELEASE				
a. Service Water System Effluent Line	D*	M	R(3)	Q(2)
b. Unit 1 Secondary Boiler Blowdown Effluent Line	D*	M	R(3)	Q(2)
3. FLOW RATE MEASUREMENTS DEVICES				
a. Liquid Radwaste Effluent Line	D(4)	N.A.	R	Q
b. Steam Generator Blowdown Effluent Line	D(4)	N.A.	R	Q
4. TANK LEVEL INDICATING DEVICES***				
a. 13.Waste Distillate Storage Tank	D**	N.A.	R	Q
b. 14.Waste Distillate Storage Tank	D**	N.A.	R	Q
c. Primary Water Storage Tank	D**	N.A.	R	Q
d. Refueling Water Storage Tank	D**	N.A.	R	Q
e. 21 Monitor Tank	D**	N.A.	R	Q
f. 22 Monitor Tank	D**	N.A.	R	Q
g. 23 Monitor Tank	D**	N.A.	R	Q

*During releases this pathway
**During liquid additions to the tank
***Tanks included specification are those outdoor tanks that are not surrounded by liners, dikes, or walls capable of holding the tank contents and do not have tank overflow and surrounding area drains connected to the liquid radwaste treatment system.

TABLE 4.10-2 (Continued)

TABLE NOTATION

(1) The channel functional test shall also demonstrate that automatic isolation of this pathway and control room alarm annunciation occur if the following conditions exists:

1. Instrument indicates measured levels above the alarm/trip setpoint.

(2) The channel functional test shall also demonstrate that control room alarm annunciation occurs if any of the following conditions exists:

1. Instrument indicates measured levels above the alarm setpoint.

2. Instrument controls not set in operate mode.

(3) Radioactive calibration standards used for channel calibrations shall be analyzed with instrumentation which is calibrated with NBS traceable standards. (Standards from suppliers who participate in measurement assurance activities with NBS are acceptable.

4) channel check shall consist of verifying indication of flow during periods of release. Channel check shall be made at least once per 24 hours on days on which continuous, periodic, or batch releases are made.

TABLE 4.10-3

RADIOACTIVE GASEOUS WASTE SAMPLING AND ANALYSIS PROGRAM

Gaseous Releases Type	Sampling Frequency	Minimum Analysis Frequency	Type of Activity Analysis	Lower Limit of Detection (LLD)[a] (uCi/ml)
A. Waste Gas Storage Tank	P Each Tank Grab Sample	P Each Tank	Principal Gamma Emitters[b]	$1x10^{-4}$
B. Containment PURGE	P Each PURGE Grab Sample	P Each PURGE	Principal Gamma Emitters[b]	$1x10x^{-4}$
C. Condenser Air Ejector	M	M	Principal Gamma Emitters[b]	$1x10^{-4}$
D. Plant Vent	M[c] Grab Sample	M[c]	Principal Gamma Emitters[b]	$1x10^{-4}$
	Continuous[f]	W[e]	H-3	$1x10^{-6}$
	Continuous[f]	W[g] Charcoal Sample	I-131	$1x10^{-12}$
	Continuous[f]	W Particulate Sample	Principal Gamma Emitters [b] (I-131, Others)	$1x10^{-11}$ $1x10^{-11}$
	Continuous[f]	M Composite Particulate Sample	Gross Alpha	$1x10^{-11}$
	Continuous[f]	Q Composite Particulate Sample	Sr-89, Sr-90	$1x10^{-11}$
	Continuous[f]	Noble Gas Monitor	Noble Gases Gross Beta or Gamma	$1x10^{-6}$ [d]

TABLE 4.10-3 (cont'd)

RADIOACTIVE GASEOUS WASTE SAMPLING AND ANALYSIS PROGRAM

E. Stack Vent	M Grab Sample	M	Principal Gamma Emitters[b]	$1x10^{-4}$
	Continuous[f]	W[e]	H-3	$1x10^{-6}$
	Continuous[f]	W Charcoal Sample	I-131	$1x10^{12}$
	Continuous[f]	W Particulate Sample	Principal Gamma Emitters[b] (I-131, Others)	$1x10^{-11}$
	Continuous[f]	M Composite Particulate Sample	Gross Alpha	$1x10^{-11}$
	Continuous[f]	Q Composite Particulate Sample	Sr-89, Sr-90	$1x10^{-11}$
	Continuous[f]	Noble Gas Monitor	Noble Gases Gross Beta or Gamma	$1x10^{-6}$ d

TABLE 4.10-3 (Continued)

TABLE NOTATION

[a] The LLD is defined, for purposes of these specifications, as the smallest concentration of radioactive material in a sample that will yield a net count, above systems background, that will be detected with 95% probability with only 5% probability of falsely concluding that a blank observation represents a "real" signal. The LLD shall be determined in accordance with the methodology and parameters in the ODCM.

It should be recognized that the LLD is defined as an a priori (before the fact) limit representing the capability of a measurement system and not as an a posteriori (after the fact) limit for a particular measurement.

[b] The principal gamma emitters for which the LLD specification applies exclusively are the following radionuclides: Kr-87, Kr-88, Xe-133, Xe-133m, Xe-135, and Xe-138 for gaseous emissions and Mn-54, Fe-59, Co-58, Co-60, Zn-65, Mo-99, Cs-134, Cs-137, Ce-141 and Ce-144 for particulate emmissions. Other gamma peaks that are identifiable, together with those of the above nuclides, shall also be analyzed and reported in the Semiannual Radioactive Effluent Release Report pursuant to Specification 6.9.1.12.

[c] If discharging via this pathway sampling and analysis shall also be performed following shutdown, startup, or a thermal power change exceeding 15 percent of rated power within one hour unless (1) analysis shows that the dose equivalent I-131 concentration in the primary coolant has not increased more than a factor of 3; and (2) the noble gas activity monitor shows that effluent activity has not increased by more than a factor or 3.

d Radiation monitor sensitivity.
e Grab sample can be used as alternative to continuous sampling.

[f] The ratio of the sample flow rate to the sampled stream flow rate shall be known for the time period covered by each dose or dose rate calculation made in accordance with Specifications 3.9.B.1.a, 3.9.B.3.a and 3.9.B.4.a.

[g] Continuous samples shall be changed at least once per 7 days and analyses shall be completed within 48 hours after changing, or after removal from sampler. Sampling shall also be performed at least once per 24 hours for at least 7 days following each shutdown, startup or thermal power change exceeding 15 percent of rated power in one hour and analyses shall be completed within 48 hours of changing. When samples collected for 24 hours are analyzed, the corresponding LLDs may be increased by a factor of 10.

This requirement does not apply if (1) analysis shows that the dose equivalent I-131 concentration in the primary coolant has not increased more than a factor of 3; or (2) the noble gas monitor shows that effluent activity has not increased more than a factor of 3.

Amendment No. 90

TABLE 4.10-4

RADIOACTIVE GASEOUS EFFLUENT MONITORING INSTRUMENTATION SURVEILLANCE REQUIREMENTS

INSTRUMENT	CHANNEL CHECK	SOURCE CHECK	CHANNEL CALIBRATION	CHANNEL FUNCTIONAL TEST	MODES IN WHICH SURVEILLANCE REQUIRED
1. WASTE GAS HOLDUP SYSTEM					
a. Noble Gas Activity Providing Alarm	D	M	R(3)	Q(2)	*
2. WASTE GAS HOLDUP SYSTEM EXPLOSIVE GAS MONITORING SYSTEM					
a. Hydrogen Monitor	D	N.A.	Q(4)	M	**
b. Hydrogen or Oxygen Monitor	D	N.A.	Q(5)	M	**
3. CONDENSER EVACUATION SYSTEM					
a. Noble Gas Activity	D	M	R(3)	Q(2)	*
4. PLANT VENT					
a. Noble Gas Activity Monitor	D	M	R(3)	Q(2)	*
b. Iodine Sampler	W	N.A.	N.A.	N.A.	*
c. Particulate Sampler	W	N.A.	N.A.	N.A.	*
d. Flow Rate Monitor	D	N.A.	R	N.A.	*
e. Sampler Flow Rate Monitor	D	N.A.	R	N.A.	*
5. STACK VENT					
a. Noble Gas Activity Monitor	D	P	R(3)	Q(1)	*
b. Iodine Sampler	W	N.A.	N.A.	N.A.	*
c. Particulate Sampler	W	N.A.	N.A.	N.A.	*
d. Flow Rate Monitor	D	N.A.	R	N.A.	*
e. Sampler Flow Rate Monitor	D	N.A.	R	N.A.	*

TABLE 4.10-4 (Continued)

TABLE NOTATION

* Surveillance is required at all times except when monitor has been removed from service in accordance with Table 3.9-2.

** During waste gas holdup system operation (treatment for primary system offgases).

(1) The channel functional test shall also demonstrate that automatic isolation of this pathway and control room alarm annunciation occurs if any of the following conditions exists:

1. Instrument indicates measured levels above the alarm/trip setpoint

(2) The channel functional test shall also demonstrate that control room alarm annunciation occurs if any of the following conditions exists:

1. Instrument indicates measured levels above the alarm setpoint.

2. Instrument controls not set in operate mode.

(3) Radioactive Calibration Standards used for channel calibrations shall be traceable to the National Bureau of Standards or an aliquot of calibration gas shall be analyzed with instrumentation which is calibrated with NBS traceable standards (standards from suppliers which participate in measurement assurance activities with NBS are acceptable.)

(4) The channel calibration shall include the use of standard gas samples containing:

1. Less than or equal to two volume percent hydrogen, and

2. Greater than or equal to four volume percent hydrogen,

(5) The channel calibration shall include the use of standard gas samples containing:

1. Less than or equal to two volume percent oxygen, and

2. Greater than or equal to two volume percent oxygen.

4.11 Radiological Environmental Monitoring

Applicability

Applies to routine testing of the radioactivity in the plant environs and is applicable to the entire Indian Point site.

Objective

The overall objectives of the radiological environmental monitoring program are:

(1) to establish a sampling schedule for the entire Indian Point site, which will recognize changes in radioactivity in the environs of the plants;

(2) to assure that the effluent releases are kept as low as is reasonably achievable (ALARA) and within allowable limits in accordance with 10 CFR 20, respectively;

(3) to verify projected and anticipated radioactivity concentrations in the environment and related exposures from releases of radioactive materials from Indian Point Units 1, 2 and 3.

Specifications

A. Monitoring Program:

1. As a minimum, radiological environmental monitoring samples shall be collected pursuant to Table 4.11-1 from the specific locations given in the table and figure(s) in the ODCM, and shall be analyzed pursuant to the requirements of Table 4.11-1 and the detection capabilities required by Table 4.11-3.

2. With the radiological environmental monitoring program not being conducted as specified in Table 4.11-1, in lieu of a Licensee Event Report, prepare and submit to the Commission, in the Annual Radiological Environmental Operating Report required by Specification 6.9.1.5, a description of the reasons for not conducting the program as required and the plans for preventing a recurrence.

3. With the level of radioactivity as the result of plant effluents in an environmental sampling medium at a specified location exceeding the reporting levels of Table 4.11-2 when averaged over any calendar quarter, in lieu of a Licensee Event Report, prepare and submit to the

Commission within 30 days, pursuant to Specification 6.9.2, a Special Report that identifies the cause(s) for exceeding the limit(s) and defines the corrective actions to be taken to reduce radioactive effluents so that the potential annual dose[1] to a member of the public is less than the calendar year limits of Specifications 3.9.A.3.a, 3.9.B.3.a, and 3.9.B.4.a When more than one of the radionuclides in Table 4.11-2 are detected in the sampling medium, this report shall be submitted if:

$$\frac{\text{concentration (1)}}{\text{reporting level (1)}} + \frac{\text{concentration (2)}}{\text{reporting level (2)}} + \ldots \geq 1.0$$

When radionuclides other than those in Table 4.11-2 are detected and are the result of plant effluents, this report shall be submitted if the potential annual dose[1] to A member of the public is equal to or greater than the calendar year limits of Specifications 3.9.A.3.a, 3.9.B.3.a and 3.9.B.4.a This report is not required if the measured level of radioactivity was not the result of plant effluents; however, in such an event, the condition shall be reported and described in the Annual Radiological Environmental Operating Report.

4. With milk or fresh leafy vegetable samples unavailable from one or more of the sample locations required by Table 4.11-1, identify locations for obtaining replacement samples and add them to the radiological environmental monitoring program within 30 days. The specific locations from which samples were unavailable may then be deleted from the monitoring program. In lieu of a Licensee Event Report and pursuant to Specification 6.9.1.6, identify the cause of the unavailability of samples and identify the new location(s) for obtaining replacement samples in the next Semiannual Radioactive Effluent Release Report and also include in the report a revised figure(s) and table for the ODCM reflecting the new location(s).

*The methodology and parameters used to estimate the potential annual dose to a member of the public shall be indicated in this report.

B Land Use Census:

1. A land use census shall be conducted and shall identify within a distance of 8 km (5 miles) the location in each of the 16 meteorological sectors of the nearest milk animal, the nearest residence and the nearest garden[2] of greater than 50 m^2 (500 ft^2) producing broad leaf vegetation. (For elevated releases as defined in Regulatory Guide 1.111, Revision 1, July 1977, the land use census shall also identify within a distance of 5 km (3 miles) the locations in each of the 16 meteorological sectors of all milk animals and all gardens of greater than 50 m^2 producing broad leaf vegetation).

2. The land use census shall be conducted during the growing seasons at least once per calendar year using that information that will provide the best results, such as by a door-to-door survey, aerial survey, or by consulting local agriculture authorities. The results of the land use census shall be included in the Annual Radiological Environmental Operating Report pursuant to Specification 6.9.1.5.

3. With land use census identifying a location(s) that yields a calculated dose or dose commitment greater than the values currently being calculated in Specification 4.10.B.4 in lieu of a Licensee Event Report, identify the new location(s) in the next Semiannual Radioactive Effluent Release Report, pursuant to Specification 6.9.1.6.

4. With a land use census identifying a location(s) that yields a calculated dose or dose commitment (via the same exposure pathway) a factor of 2 greater than at a location from which samples are currently being obtained in accordance with Specification 4.11.A, add the new location(s) to the radiological environmental monitoring program within 30 days. The sampling location(s), excluding the control station location, having the lowest calculated dose or dose commitment(s), via the same exposure pathway, may be deleted from this monitoring program after (October 31) of the year in which this land use census was conducted. In lieu of a Licensee Event Report and pursuant to Specification 6.9.1.6, identify the new location(s) in the next Semiannual Radioactive Effluent Release Report and also include in the report a revised figure(s) and table for the ODCM reflecting the new location(s).

---

[2]Broad leaf vegetation sampling of at least three different kinds of vegetation may be performed at the site boundary in each of two different direction sectors with the highest predicted D/Qs in lieu of the garden census. Specifications for broad leaf vegetation sampling in Table 4.11-1.4c shall be followed, including analysis of control samples.

C. Interlaboratory Comparison Program

1. Analyses shall be performed on radioactive materials supplied as part of an Interlaboratory Comparison Program that has been approved by the Commission.

2. With analyses not being performed as required in specification 4.11.C.1 above, report the corrective actions taken to prevent a recurrence to the Commission in the Annual Radiological Environmental Operating Report pursuant to Specification 6.9.1.5

3. The Interlaboratory Comparison Program shall be described in the ODCM. A summary of the results obtained as part of the above required Interlaboratory Comparison Program shall be included in the Annual Radiological Environmental Operating Report pursuant to Specification 6.9.1.5.

D. Routine Reporting Requirements

1. A summary of the results of the monitoring program specified in 4.11.A, the results the land use census specified 4.11.B, and the results of analysis performed as part of an Interlaboratory Comparison Program specified in 4.11.C shall all be included in the Annual Radiological Environmental Operating Report as specified in Specification 6.9.1.5.

Basis

The radiological environmental monitoring program required by this specification provides representative measurements of radiation and of radioactive materials in those exposure pathways and for those radionuclides that lead to the highest potential radiation exposures of members of the public resulting from the station operation. This monitoring program implements Section IV.B.2 of Appendix I to 10 CFR Part 50 and thereby supplements the radiological effluent monitoring program by verifying that the measurable concentrations of radioactive materials and levels of radiation are not higher than expected on the basis of the effluent measurements and the modeling of the environmental exposure pathways. Guidance for this monitoring program is provided by the Radiological Assessment Branch Technical Position on Environmental Monitoring. Program changes may be initiated based on operational experience.

The required detection capabilities for environmental sample analyses are tabulated in terms of the lower limits of detection (LLDs). The LLDs required by Table 4.11-3 are considered optimum for routine environmental measurements in industrial laboratories. It should be recogninzed that the LLD is defined as an a priori (before the fact) limit representing the capability of a measurement system and not as an a posteriori (after the fact) limit for a particular measurement.

Specification 4.11.B is provided to ensure that changes in the use of areas at and beyond the site boundary are identified and that modifications to the radiological environmental monitoring program are made if required by the results of this census. The best information from the door-to-door survey, from aerial survey or from consulting with local agricultural authorities shall be used. This census satisfies the requirements of Section IV.B.3 of Appendix I to 10 CFR Part 50. Restricting the census to gardens of greater than 50 m^2 provides assurance that significant exposure pathways via leafy vegetables will be identified and monitored since a garden of this size is the minimum required to produce the quantity (26 kg/year) of leafy vegetables assumed in Regulatory Guide 1.109 for consumption by a child. To determine this minimum garden size, the following assumptions were made: 1) 20% of the garden was used for growing broad leaf vegetation (i.e., similar to lettuce and cabbage), and 2) a vegetation yield of 2 kg/m^2.

The requirement for participation in an approved Interlaboratory Comparison Program is provided to ensure that independent checks on the precision and accuracy of the measurements of radioactive material in environmental sample matrices are performed as part of the quality assurance program for environmental monitoring in order to demonstrate that the results are valid for the purposes of Section IV.B.2 of Appendix I to 10 CFR Part 50.

TABLE 4.11-1(1 of 6)

RADIOLOGICAL ENVIRONMENTAL MONITORING PROGRAM

Exposure Pathway and/or Sample	Number of Representative Samples and Sample Locations[a]	Sampling and Collection Frequency	Type and Frequency of Analysis
1. DIRECT RADIATION[b]	40 routine monitoring stations (DR1-DR-40) either with two or more dosimeters or with one instrument for measuring and recording placed as follows: dose rate continuously, placed an inner ring of stations, one in each meteorological sector in the general area of the site boundary (DR1-DR16); an outer ring of stations, one in each meteorological sector in the 6- to 8-km range from the site (DR17-DR32); the balance of the stations (DR33-DR40) to be placed in special interest areas such as population centers, nearby residences, schools, and in 1 or 2 areas to serve as control stations.	Quarterly	Gamma dose quarterly.

TABLE 4.11-1 (2 of 6)

RADIOLOGICAL ENVIRONMENTAL MONITORING PROGRAM

Exposure Pathway and/or Sample	Number of Representative Samples and Sample Locations[a]	Sampling and Collection Frequency	Type and Frequency of Analysis
2. AIRBORNE			
Radioiodine and Particulates	Samples from 5 locations (A1-A5): 3 samples (A1-A3) from close to the 3 site boundary locations, in different sectors, of the highest calculated annual average groundlevel D/Q. 1 sample (A-4) from the vicinity of a community having the highest calculated annual average ground-level D/Q. 1 sample (A-5) from a control location, as for example 15-30 km distant and in the least prevalent wind direction.[c]	Continuous sampler operation with sample collection weekly, or more frequently by dust loading.	Radioiodine Cannister: I-131 analysis weekly. Particulate Sampler: Gross beta radio-activity analysis following filter change;[d] Gamma isotopic analysis[e] of composite (by location) quarterly.
3. WATERBORNE			
a. Surface[f]	1 sample upstream (Wa1) 1 sample downstream (Wa2)	Composite sample 1-month period[g]	Gamma isotopic analysis[e] monthly. Composite for tritium analysis quarterly

RADIOLOGICAL ENVIRONMENTAL MONITORING PROGRAM

Exposure Pathway and/or Sample	Samples and Sample Locations[a]	Number of Representative Sampling and Collection Frequency	Type and Frequency of Analysis
b. Drinking	1 sample (Wb1) of the nearest surface drinking water supply	Grab Sample - monthly	Gross beta and gamma isotopic analysis[e] monthly. Composite for tritium analysis quarterly.
c. Sediment from Shoreline	2 samples (Wc1-Wc2) 1 sample (Wc1) from downstream area with existing or potential recreational value. 1 control sample (Wc2) from an upstream area.	2 annually at least 90 days apart	Gamma isotopic analysis[e] semiannually.
4. INGESTION			
a. Milk	Samples from milking animals in 3 locations (Ia1-Ia3) within 5 km distance having the highest dose potential. If there are none, then, 1 sample from milking animals in each of 3 areas (Ia1-Ia3) between 5 to 8 km distance, if available, where doses are calculated to be greater than 1 mrem per yr[h]	Semimonthly when animals are on pasture monthly at other times.	Gamma isotopic[e] and I-131 analysis semimonthly when animals are on pasture; monthly at other times.
	1 sample from milking animals at a control location (Ia4), 15-30 km distant and in the least prevalent wind direction.	Concurrently with indicator locations	

RADIOLOGICAL ENVIRONMENTAL MONITORING PROGRAM

Exposure Pathway and/or Sample	Samples and Sample Locations[a]	Number of Representative Sampling and Collection Frequency	Type and Frequency of Analysis
b. Fish and Invertebrates	1 sample of each of 2 commercially and/or recreationally important species in vicinity of plant discharge area (Ib1).	Sample in season, or semiannually if they are not seasonal	Gamma isotopic analysis[e] on edible portions.
	1 sample of same species, if available in areas not influenced by plant discharge (Ib2).		
c. Food Products	Samples of 3 different kinds of broad leaf vegetation (edible or inedible) grown nearest each of two different offsite locations of highest predicted annual average groundlevel D/Q if milk sampling is not performed (Ic1-Ic2).	Monthly when available	Gamma isotopic[e] and I-131 analysis.
	1 sample of each of the similar broad leaf vegetation grown 15-30 km distant in the least prevalent wind direction if milk sampling is not performed (Ic3).	Monthly when available	Gamma isotopic[e] and I-131 analysis

TABLE 4.11-1 (5 of 6)

TABLE NOTATION

a The code letters in parenthesis, e.g., DR1, A1 define generic sample locations. Specific parameters of distance and direction sector from the centerline of one reactor, and additional description where pertinent, shall be provided for each and every sample location in Table 4.11-1 in a table and figure(s) in the ODCM. Refer to NUREG-0133, "Preparation of Radiological Effluent Technical Specifications for Nuclear Power Plants," October 1978, and to Radiological Assessment Branch Technical Position, Revision 1, November 1979. Deviations are permitted from the required sampling schedule if specimens are unobtainable due to hazardous conditions, seasonal unavailability, malfunction of automatic sampling equipment and other legitimate reasons. If specimens are unobtainable due to sampling equipment malfunction, every effort shall be made to complete corrective action prior to the end of the next sampling period. All deviations from the sampling schedule shall be documented in the Annual Radiological Environmental Operating Report pursuant to Specification 6.9.1.5. It is recognized that, at times, it may not be possible or practicable to continue to obtain samples of the media of choice at the most desired location or time. In these instances suitable alternative media and locations may be chosen for the particular pathway in question and appropriate substitutions made within 30 days in the radiological environmental monitoring program. In lieu of a Licensee Event Report and pursuant to Specification 6.9.1.6, identify the cause of the unavailability of samples for that pathway and identify the new location(s) for obtaining replacement samples in the next Semiannual Radioactive Effluent Release Report and also include in the report a revised figure(s) and table for the ODCM reflecting the new location(s).

b One or more instruments, such as a pressurized ion chamber, for measuring and recording dose rate continuously may be used in place of, or in addition to, integrating dosimeters. For the purposes of this table, a thermoluminescent dosimeter (TLD) is considered to be one phosphor; two or more phosphors in a packet are considered as two or more dosimeters. Film badges shall not be used as dosimeters for measuring direct radiation.

c The purpose of this sample is to obtain background information. If it is not practical to establish control locations in accordance with the distance and wind direction criteria, other sites that provide valid background data may be substituted.

TABLE 4.11-1 (6 of 6)

TABLE NOTATION

d Airborne particulate sample filters shall be analyzed for gross beta radioactivity 24 hours or more after sampling to allow for radon and thoron daughter decay. If gross beta activity in air particulate samples is greater than ten times the previous calendar year mean of control samples, gamma isotopic analysis shall be performed on the individual samples.

e Gamma isotopic analysis means the identification and quantification of gamma-emitting radionuclides that may be attributable to the effluents from the facility.

f "Upstream" samples shall be taken near the intake structures as described in the ODCM. "Downstream" samples shall be taken from the mixing zone at the diffuser of the discharge canal.

g A composite sample is one in which the quantity (aliquot) of liquid sample shall be collected at time intervals that are very short (e.g., hourly) relative to the compositing period (e.g., monthly) in order to assure obtaining a representative sample.

h The dose shall be calculated for the maximum organ and age group, using the methodology and parameters in the ODCM.

TABLE 4.11-2

REPORTING LEVELS FOR RADIOACTIVITY CONCENTRATIONS IN ENVIRONMENTAL SAMPLES

Reporting Levels

Analysis	Water (pCi/l)	Airborne Particulate or Gases (pCi/m^3)	Fish (pCi/kg, wet)	Milk (pCi/l)	Food Products (pCi/kg, wet)
H-3	20,000*				
Mn-54	1,000		30,000		
Fe-59	400		10,000		
Co-58	1,000		30,000		
Co-60	300		10,000		
Zn-65	300		20,000		
Zr-Nb-95	400				
I-131	2	0.9		3	100
Cs-134	30	10	1,000	60	1,000
Cs-137	50	20	2,000	70	2,000
Ba-La-140	200			300	

*For drinking water samples. This is 40 CFR Part 141 value. If no drinking water pathway exists, a value of 30,000 pCi/l may be used.

TABLE 4.11-3 (1 of 2)

DETECTION CAPABILITIES FOR ENVIRONMENTAL SAMPLE ANALYSIS[a]

LOWER LIMIT OF DETECTION (LLD)[b,c]

Analysis	Water (pCi/l)	Airborne Particulate or Gas (pCi/m^3)	Fish (pCi/kg,wet)	Milk (pCi/l)	Food Products (pCi/kg, wet)	Sediment (pCi/kg,dry)
gross beta	4	0.01				
H-3	2000*					
Mn-54	15		130			
Fe-59	30		260			
Co-58, 60	15		130			
Zn-65	30		260			
Zr-Nb-95	15					
I-131	1[d]	0.07		1	60	
Cs-134	15	0.05	130	15	60	150
Cs-137	18	0.06	150	18	80	180
Ba-La-140	15			15		

*If no drinking water pathway exists, a value of 3000 pCi/l may be used.

TABLE 4.11-3 (2 of 2)

TABLE NOTATION

a This list does not mean that only these nuclides are to be considered. Other peaks that are identifiable, together with those of the above nuclides, shall also be analyzed and reported in the Annual Radiological Environmental Operating Report pursuant to Specification 6.9.1.5.

b Required detection capabilities for thermoluminescent dosimeters used for environmental measurements are given in Regulatory Guide 4.13.

c The LLD is defined, for purposes of these specifications, as the smallest concentration of radioactive material in a sample that will yield a net count, above system background, that will be detected with 95% probability with only 5% probability of falsely concluding that a blank observation represents a "real" signal.

4.19 Meteorological Monitoring System

Applicability

This specification applies to the surveillance requirements for the meteorological monitoring system.

Objective

To verify operability of the meteorological monitoring system such that adequate measurement and documentation of meteorological conditions at the site can be effected.

Specifications

A. Each meteorological monitoring instrumentation channel shall be demonstrated operable by performance of the surveillance testing required by Table 4.19-1.

B. Meteorological data shall be summarized and reported as required for inclusion in the Semiannual Radioactive Effluent Release Report pursuant to Specification 6.9.1.6.

Basis

This specification assures the operability of the meteorological monitoring instrumentation and the collection of meteorological data at the plant site. This data is used for estimating potential radiation doses to the public resulting from routine or accidental releases of radioactive materials to the atmosphere. A meteorological data collection program, as described in this specification, is necessary to meet the requirements of 10 CFR 50.36a (a) (2), Appendix E to 10 CFR 50 and 10 CFR 51.

Table 4.19-1

Meteorological Monitoring Instrumentation

Surveillance Requirements

INSTRUMENT	Channel Check	Channel Calibration
1. WIND SPEED:		
a. Nominal Elev. 10m*	D	SA
b. Nominal Elev. 60m	D	SA
c. Nominal Elev. 122m	D	SA
2. WIND DIRECTION:		
a. Nominal Elev. 10m	D	SA
b. Nominal Elev. 60m	D	SA
c. Nominal Elev. 122m	D	SA
3. AIR TEMPERATURE DIFFERENTIAL (DELTA T):		
a. Nominal Elev. 60 - 10m	D	SA
b. Nominal Elev. 122 - 10m	D	SA

*10m as measured by the primary and back up meteorological tower.

5.0 Design Features

5.1 Site

Applicability

Applies to the location and extent of the reactor site.

Objective

To define those aspects of the site which affect the overall safety of the installation.

Specifications

A. Exclusion Area and Low Population Zone

The minimum distance from the reactor center line to the boundary of the site exclusion area and the outer boundary of the low population zone as defined in 10 CFR 100.3 is 520 meters and 1100 meters, respectively. For the purpose of satisfying 10 CFR Part 20, the "Restricted Area" is the same as the "Exclusion Area" defined in Figure 2.2-2 of Section 2.2 of the FSAR.

B. Map Defining Unrestricted Areas for Radioactive Gaseous and Liquid Effluents

Information which will allow identification of structures and releases points for radioactive gaseous and liquid effluents, are shown in Figure 5.1-1. For purpose of effluent release calculations, the unrestricted area shall be as shown in this figure.

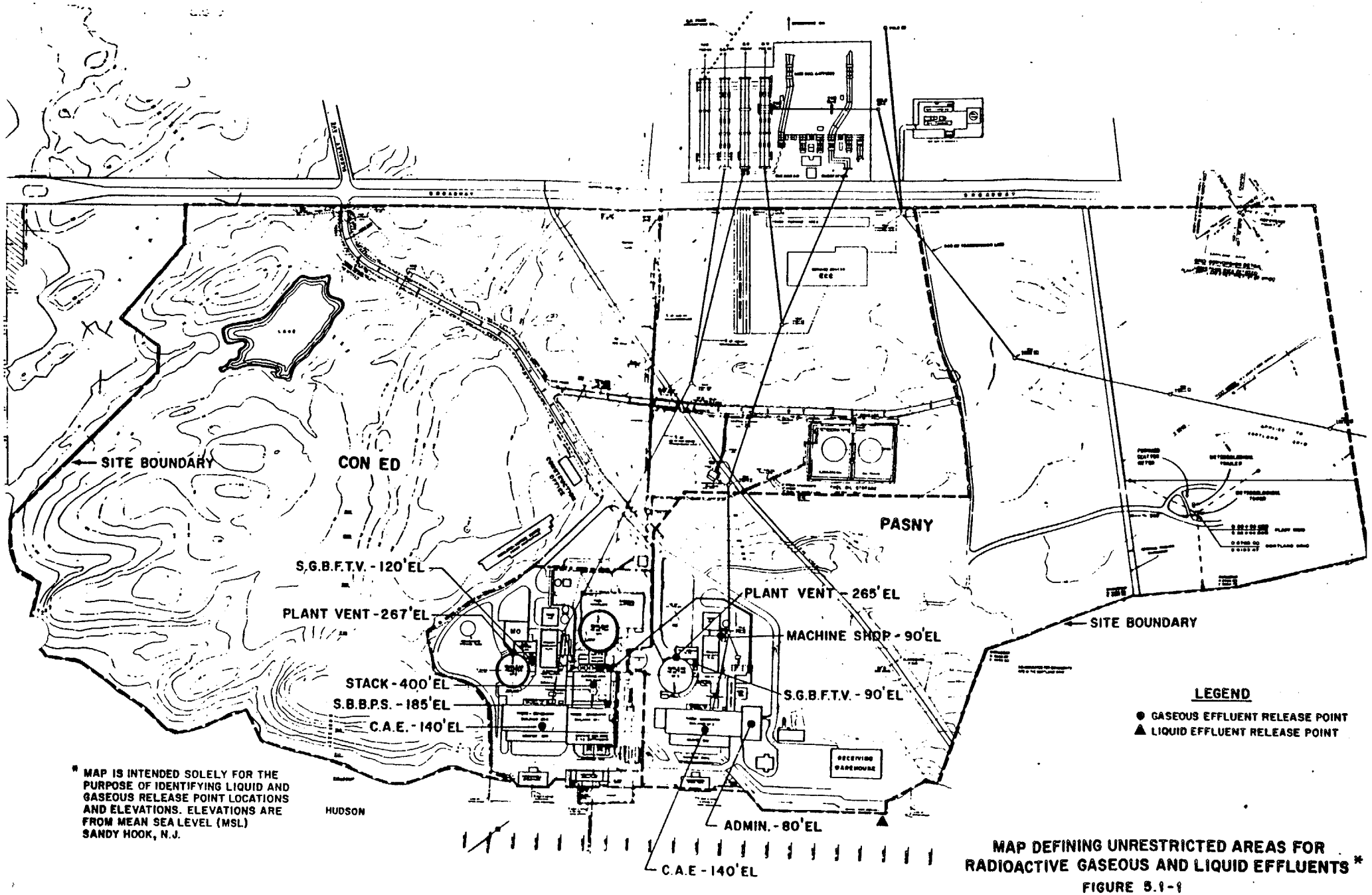

* MAP IS INTENDED SOLELY FOR THE PURPOSE OF IDENTIFYING LIQUID AND GASEOUS RELEASE POINT LOCATIONS AND ELEVATIONS. ELEVATIONS ARE FROM MEAN SEA LEVEL (MSL) SANDY HOOK, N.J.

MAP DEFINING UNRESTRICTED AREAS FOR RADIOACTIVE GASEOUS AND LIQUID EFFLUENTS *

FIGURE 5.1-1

j. Review of any unplanned, radioactive release, including the preparation of reports covering evaluation, recommendations and disposition of the corrective action to prevent recurrence and the forwarding of these reports to the Vice President - Nuclear Power and to the Nuclear Facility Safety Committee.

k. Review of changes to the Process Control Program and the Offsite Dose Calculation Manual.

g. Reportable Occurrence, as specified in Specifications 6.9.1.9.1 and 6.9.1.9.2.

h. Any indication of an unanticipated deficiency in some aspect of design or operation of safety related structures, systems, or components.

i. Reports and meeting minutes of the Station Nuclear Safety Committee.

j. Environmental surveillance program pertaining to radiological matters.

Audits

6.5.2.8 Audits of facility activities shall be performed under the cognizance of the NFSC. These audits shall encompass:

a. The conformance of facility operation to all provisions contained within the Radiological Technical Specifications (Appendix A) and applicable license conditions at least once per 12 months.

b. The conformance to all provisions contained within the Environmental Technical Specifications (Appendix A) pertaining to radiological matters and applicable license conditions at least once per 12 months.

c. The performance, training and qualifications of the entire facility staff at least once per 12 months.

d. The results of all actions taken to correct deficiencies occurring in facility equipment, structures, systems or method of operation that affect nuclear safey at least once per 6 months.

e. The performance of all activities required by the Quality Assurance Program to meet the criteria of Appendix "B", 10 CFR 50, at least once per 24 months.

f. The Facility Emergency Plan and implementing procedures at least once per 24 months.

g. The Facility Security Plan and implementing procedures at least once per 24 months.

h. The Facility Fire Protection Program and implementing procedures at least once per 24 months.

i. A fire protection and loss prevention inspection and audit shall be performed utilizing either qualified offsite licensee personnel or an outside fire protection firm at least once per 12 months.

j. An inspection and audit of the fire protection and loss prevention program shall be performed by an outside qualified fire consultant at least once per 36 months.

k. The radiological environmental monitoring program and the results thereof at least once per 12 months.

l. The Offsite Dose Calculations Manual and implementing procedures at least once per 24 months.

m. The Process Control Program and implementing procedures for processing and packaging of radioactive wastes at least once per 24 months.

n. The performance of activities required by the Quality Assurance Program to meet the provisions of Regulatory Guide 1.21, Revision 1, June 1974 and Regulatory Guide 4.1, Revision 1, April 1975 at least once per 12 months.

o. Any other area of facility operation considered appropriate by the NFSC or the President of the Company.

Authority

6.5.2.9 The NFSC shall report to and advise the President of the Company on those areas of responsibility specified in Section 6.5.2.7 and 6.5.2.8.

Records

6.5.2.10 Records of NFSC activities shall be prepared, approved and distributed as indicated below:

a. Minutes of each NFSC meeting shall be prepared, approved and forwarded to the President and to Senior Company Officers concerned with nuclear facilities within 14 days following each meeting.

b. Reports of reviews encompassed by Section 6.5.2.7 e, f, g and h above, shall be prepared, approved and forwarded to the President and to Senior Company Officers concerned with nuclear facilities within 14 days following completion of the review.

c. Audit reports encompassed by Section 6.5.2.8 above, shall be forwarded to the Senior Company Officers concerned with nuclear facilities and to the management positions responsible for the areas audited within 30 days after completion of the audit.

6.6 Reportable Occurrence Action

6.6.1 The following actions shall be taken in the event of a Reportable Occurrence:

a. The Commission shall be notified and/or a report submitted pursuant to the requirements of Specifications 6.9.1.9.1 and/or 6.9.1.9.2.

b. Each Reportable Occurrence Report submitted to the Commission shall be reviewed by the SNSC and submitted to the NFSC Chairman, and the Vice President - Nuclear Power.

6.7 Safety Limit Violation

6.7.1 The following actions shall be taken in the event a Safety Limit is violated:

a. The provisions of 10 CFR 50.36(c)(1)(i) shall be complied with immediately.

b. The Safety Limit Violation shall be reported to the Commission, the Vice President - Nuclear Power and to the NFSC Chairman immediately.

c. A Safety Limit Violation Report shall be prepared. The report shall be reviewed by the SNSC. This report shall describe (1) applicable circumstances preceding the violation, (2) effects of the violation upon facility components, systems or structures, and (3) corrective action taken to prevent recurrence.

d. The Safety Limit Violation Report shall be submitted to the Commission, the NFSC Chairman and the Vice President - Nuclear Power within 10 days of the violation.

6.8 Procedures

6.8.1 Written procedures and administrative policies shall be established, implemented and maintained covering the activities referenced below:

a. The requirements anda recommendations of Sections 5.1 and 5.3 of ANSI N18.7-1972 and Appendix "A" of USAEC Regulatory Guide 1.33 (issued November 1972) except as provided in 6.8.2 and 6.8.3 below.

b. Process Control Program implementation

c. Offsite Dose Calculation Manual implementation.

d. Quality Assurance Program for effluent and environmental monitoring using the guidance in Regulatory Guide 1.21, Revision 1, April 1974 and Regulatory Guide 4.1, Revision 1, April 1975.

6.8.2 Each procedure and administrative policy of 6.8.1 above, and any changes to them shall be reviewed and approved for implementation in accordance with a written administrative control procedure approved by the appropriate General Manager, with the concurrence of the Station Nuclear Safety Committee and the Nuclear Facilities Safety Committee. The administrative control procedure required by this specification shall, as a minimum, require that:

a. Each proposed procedure/procedure change involving safety related components. and/or operation of same receives a pre-implementation review by the SNSC except in case of an emergency.

b. Each proposed procedure/procedure change which renders or may render Final Safety Analysis Report or subsequent safety analysis reports inaccurate and those which involve or may involve potential unreviewed safety questions are approved by the SNSC prior to implementation.

c. The approval of the Nuclear Facilities Safety Committee shall be sought if, following its review, the Station Nuclear Safety Committee, finds that the proposed procedure/procedure change either involves an unreviewed safety question of if it is in doubt as to whether or not an unreviewed safety question is involved.

6.8.3 A mechanism shall exist for making temporary changes and they shall only be made by approved management personnel in accordance with the requirements of ANSI 18.7-1972. The change shall be documented, and reviewed by the SNSC within 7 days of implementation.

6.9 Reporting Requirements

Routine Reports and Reportable Occurrences

6.9.1 In addition to the applicable reporting requirements of Title 10, Code of Federal Regulations, the following reports shall be submitted to the Director of the Region I Office of Inspection and Enforcement unless otherwise noted.

TLD,or film badge measurements. Small exposures totalling less than 20% of the individual total dose need not be accounted for. In the aggregate, at least 80% of the total whole body dose received from external sources shall be assigned to specific major work functions.

Annual Radiological Environmental Operating Report[3]

6.9.1.5 Routine Radiological Environmental Operating Reports covering the operation of the unit during the previous calendar year shall be submitted prior to May 1 of each year.

The Annual Radiological Environmental Operating Reports shall include summaries, interpretations, and statistical evaluation of the results of the radiological environmental surveillance activities for the report period, including a comparison with preoperational studies, with operational controls as appropriate, and with previous environmental surveillance reports, and an assessment of the observed impacts of the plant operation on the environment. The report shall also include the results of land use censuses required by Specification 4.11.B

The Annual Radiological Environmental Operating Reports shall include the results of analysis of all radiological environmental samples and of all environmental radiation measurements taken during the period pursuant to the locations specified in the Table and Figures in the ODCM, as well as summarized and tabulated results of these analyses and measurements as described in the ODCM. In the event that some individual results are not available for inclusion with the report, the report shall be submitted noting and explaining the reasons for the missing results. The missing data shall be submitted as soon as possible in a supplementary report.

The reports shall also include the following: a summary description of the radiological environmental monitoring program; at least two legible maps[4] covering all sampling locations keyed to a table giving distances and directions from the centerline of one reactor; the results of licensee participation in the Interlaboratory Comparison Program, required by Specification 4.11.C; discussion and all deviations from the sampling schedule of Table 4.11-1; and discussion of all analyses in which the LLD required by Table 4.11-3 was not achievable.

[3]A single submittal may be made for a multiple unit station.

[4]One map shall cover stations near the site boundary; a second shall include more distant stations.

Semiannual Radioactive Effluent Report[5]

6.9.1.6 Routine Radioactive Effluent Release Reports covering the operation of the unit during the previous 6 months of operation shall be submitted within 60 days after January 1 and July 1 of each year. The period of the first report shall begin with the date of initial criticality.

The Radioactive Effluent Release Reports shall include a summary of the quantities of radioactive liquid and gaseous effluents and solid waste released from the unit as outlined in Regulatory Guide 1.21, "Measuring, Evaluating, and Reporting Radioactivity in Solid Wastes and Releases of Radioactive Materials in Liquid Gaseous Effluents from Light-Water-Cooled Nuclear Power Plants," Revision 1, June 1974, with data summarized on a quarterly basis following the format of Appendix B thereof.

The Radioactive Effluent Release Report to be submitted within 60 days after January 1 of each year shall include an annual summary of hourly meteorological data collected over the previous year. This annual summary may be either in the form of an hour-by-hour listing on magnetic tape of wind speed, wind direction, atmospheric stability, and precipitation (if measured), or in the form of joint frequency distribution of wind spped, wind direction, and atmospheric stability.[6]
This same report shall include an assessment of the radiation doses due to the radioactive liquid and gaseous effluents releases from the unit or station during the previous calendar year. This same report shall also include an assessment of the radiation doses from radioactive liquid and gaseous effluents to Members of the Public due to their activities inside te Site Boundary (Figure 5.1-1) during the report period. All Assumptions used in making these assessments, i.e., specific activity, exposure time and location, shall be included in these reports. The meteorological conditions concurrent with the time of release of radioactive materials in gaseous effluents, as determined by sampling frequency and measurement, shall be used for determing the gaseous pathway doses. Approximate and conservative approximate methods are acceptable. The assessment of radiation doses shall be performed in accordance with the methodology and parameters in the Offsite Dose Calculation Manual (ODCM).

[5]A single submittal may be made for a multiple unit station. The submittal should combine those sections that are common to all units at the station; however, for units with separate radwaste systems, the submittal shall specify the releases of radioactive material from each unit.

[6]In lieu of submission with the first half year Radioactive Effluent Release Report, the licensee has the option of retaining this summary of required meteorological data no site in a file that shall be provide to the NRC upon request.

Acceptable methods for calculating the dose contribution from liquid and gaseous effluents are given in Regulatory Guide 1.109 Rev. 1, October 1977.

The Radioactive Effluent Release Reports shall include the following information for each class of solid waste (in compliance with 10 CFR Part 61) shipped offsite during the report period:

a) Container volume.

b) Total Curie quantity (specify whether determined by measurement or estimate),

c) Principal radionuclides (specify whether determined by measurement or estimate),

d) Source of waste and processing employed (e.g.. dewatered spent resin, compacted dry waste, evaporator bottom),

e) Type of container (e.g., LSA, Type A, Type B, Large Quantity), and

f) Solidification agent or absorbent (e.g., cement, urea formaldehyde).

The Radioactive Effluent Release Reports shall include a list and description of unplanned releases from the site to Unrestricted Areas of radioactive materials in gaseous and liquid effluents made during the reporting period.

The Radioactive Effluent Release Report shall include any changes made during the reporting period to the Process Control Program(PCP) and to the Offsite Dose Calculation Manual(ODCM), as well as a listing of new locations for dose calculations and/or environmental monitoring identified by the land use census pursuant to Specification 4.11.B.

Monthly Operating Report

6.9.1.7 Routine reports of operating statistics, operating and shutdown experience and major safety-related corrective maintenance shall be submitted on a monthly basis to the Director, Office of Management Information & Program Control, with 40 copies to the Office of Inspection and Enforcement, U.S. Nuclear Regulatory Commission, Washington, D.C. 20555, no later than 15 days following the calendar month covered by the report.

6.9.1.8 Each monthly operating report shall include:

a. A tabulation of plant operating data and statistics.

b. A narrative summary of operating experience during the report period relating to safe operation of the facility, including major safety-related corrective maintenance not covered in 6.9.1.8.c.5 below.[7]

c. For each outage or forced reduction in power[8] of over twenty percent of rated power where the reduction extends for greater than four hours:

1. The proximate cause and the system and major component involved (if the outage or forced reduction in power involved equipment malfunction);

2. A brief discussion of (of reference to reports of) any reportable occurrence pertaining to the outage or power reduction;

3. Corrective action taken to reduce the probability of recurrence, if appropriate;

[7]Any safety-related maintenance information not available for inclusion in the monthly operating report for a report period shall be included in a subsequent monthly operating report not later than 6 months following completion of such maintenance.

[8]The term "forced reduction in power" is defined as the occurrence of a component failure or other condition which requires that the load on the unit be reduced for corrective action immediately or up to and including the very next weekend. Note that routine preventive maintenance, surveillance and calibration activities requiring power reductions are not covered by this section.

4. Operating time lost as a result of the outage or power reduction (for scheduled or forces outages,[9] use the generator off-line hours; for forced reductions in power, use the approximate duration of operation at reduced power);

5. A description of major safety-related corrective maintenance performed during the outage or power reduction, including the systems and component involved and identification of the critical path activity dictating the length of the outage or power reduction; and

6. A report of any single release of radioactivity or radiation exposure specifically associated with the outage which accounts for more than 10% of the allowable annual values.

Reportable Occurrence

6.9.1.9 The reportable occurrences of specifications 6.9.1.9.1 and 6.9.1.9.2 below, including corrective actions and measures to prevent recurrence, shall be reported to the NRC. Supplemental reports may be required to fully describe final resolution of occurrence. In case of corrected or supplemental reports, a licensee event report shall be completed and reference shall be made to the original report date.

Prompt Notification with Written Followup Report

6.9.1.9.1 The types of events listed below shall be reported within 24 hours of identification by telephone and confirmed by telegraph, mailgram, or facsimile transmission to the Director of the Region I Office of Inspection and Enforcement, or his designate, no later than the first working day following the event, with a written followup report within two weeks. The written followup report shall include, as a minimum, a completed copy of a licensee event report form. Information provided on the licensee event report form shall be supplemented, as needed, by additional narrative material to provide complete explanation of the circumstances surrounding the event.

a. Failure of the reactor protection system or other systems subject to limiting safety system settings to initiate the required protective function by the time a monitored parameter reaches the setpoint specified as the limiting safety system setting in the technical specifications or failure to complete the required protective function.

[9]The term "forced outage" is defined as the occurrence of a component failure or other condition which requires that the unit be removed from service for corrective action immediately or up to and including the very next weekend.

b. Operation of the unit or affected systems when any parameter or operation subject to a limiting condition for operation is less conservative than the least conservative aspect of the limiting condition for operation established in the technical specifications.

c. Abnormal degradation discovered in fuel cladding, reactor coolant pressure boundary, or primary containment.[10]

d. Reactivity anomalies involving disagreement with the predicted value of reactivity balance under steady state conditions during power operation greater than or equal to 1% Δ k/k; a calculated reactivity balance indicating a shutdown margin less conservative than specified in the technical specifications; short-term reactivity increases that correspond to a reactor period of less than 5 seconds or, if subcritical, an unplanned reactivity insertion of more than 0.5% Δ k/k; or occurrence of any unplanned criticality.

e. Failure or malfunction of one or more components which prevents or could prevent, by itself, the fulfillment of the functional requirements of system(s) used to cope with accidents analyzed in the FSAR.

f. Personnel error or procedural inadequacy which prevents or could prevent by itself, the fulfillment of the functional requirements of systems required to cope with accidents analyzed in the FSAR.

g. Conditions arising from natural or man-made events that, as a direct result of the event require plant shutdown, operation of safety systems, or other protective measures required by technical specifications.

h. Errors discovered in the transient or accident analyses or in the methods used ofr such analyses as described in the FSAR or in the bases for the technical specifications that have or could have permitted reactor operation in a manner less conservative than assumce in the analyses.

[10] Leakage of packing, gaskets, mechanical joints or seal welds within the limits for identified leakage set forth in technical specifications need not be reported under this item. Steam generator tube degradation need not be reported under this item except where leakage exceeds the limits of specification 3.1.F.

i. Performance of structures, systems, or components that requires remedial action or corrective measures to prevent operation in a manner less conservative than assumes in the accident analyses in the FSAR or technical specifications bases; or discovery during plant life of conditions not specifically considered in the safety analysis report or technical specifications that require remedial action or corrective measures to prevent the existence or development of an unsafe condition.

Thirty Day Written Reports

6.9.1.9.2 The types of events listed below shall be the subject of written reports to th Director of the Region I Office of Inspection and Enforcement within thirty days of occurrence of te event. The written report shall include, as a minimum, a completed copy of a licensee event report form. Information provided on the licensee event form shall be supplemented, as needed, by additional narrative material to provide complete explanation of the circumstances surrounding the event.

a. Reactor protection system or engineered safety feature instrument settings which are found to be less conservative than those established by the technical specifications but which do not prevent the fulfillment of the functional requirements of affected systems.[11]

b. Conditions leading to operation in a degraded mode permitted by a limiting condition for operation or plant shutdown required by a limiting condition for operation.[11]

c. Observed inadequacies in the implementation of administrative or procedural controls which threaten to cause reduction of degree of redundancy provided in reactor protection systems or engineered safety feature systems.

d. Abnormal degradation of systems other than those specified in 6.9.1.9.1.c above designed to contain radioactive material resulting from the fission process.[12]

---

[11]Routine surveillance testing, instrument calibration, or preventive maintenance which require system configurations as described need not be reported except where test results themselves reveal a degraded mode as described.

[12]Sealed sources or calibration sources are not included under this item. Leakage of packing, gaskets, mechanical joints or seal welds within the limits for identified leakage set forth in technical specifications need not be reported under this item.

Special Reports

6.9.2 Special reports shall be submitted to the Director of the Region I Office of Inspection and Enforcement within the time period specified for each report. These reports shall be submitted covering the activities identified below pursuant to the requirements of the applicable reference specification:

a. Each containment integrated leak rate test shall be the subjet of a summary technical report including results of the local leak rate test since the last report. The report shall include analyses and interpretations of the results which demonstrate compliance in meeting the leak rate limits specified in the Technical Specifications.

b. A report covering the X-Y xenon stability tests within three months upon completion of the tests.

c. To provide the Commission with added verifications of the safety and reliability of the pre-pressurized Zircaloy-clad nuclear fuel, a limited program of non-destructive fuel inspections will be conducted. The program shall consist of a visual inspection (e.g., underwater TV, periscope, or other) of the two lead burnup assemblies in each region during the first, second, and third refueling shutdowns. Any condition observed by this inspection which would lead to unacceptable fuel performance may be the object of an expanded surveillance effort. If another domestic plant which contains pre-pressurized fuel of a similar design reaches fuel exposures equal to or greater than at Indian Point Unit No.2, and if a limited inspection program is or has been performed there, then the program may not have to be performed at Indian Point Unit No.2. However, such action requires approval of the Nuclear Regulatory Commission. The results of these inspections will be reported to the Nuclear Regulatory Commission.

d. Inoperable fire protection and detection equipment (Specification 3.13).

e. Sealed source leakage in excess of limits (Specification 4.15).

f. The complete results of the steam generator tube inservice inspection (Specification 4.13.C).

g. Radioactive effluents (Specification 3.9).

h. Radiological environmental monitoring (Specification 4.11)

i. Meteorological monitoring instrumentation (Specification 3.15).

6.10 Record Retention

6.10.1 The following records shall be retained for at least five years:

a. Records and logs of facility operation covering time interval at each power level.

b. Records and logs of principal maintenance activities, inspections, repair and replacement of principal items of equipment related to nuclear safety.

c. Reportable Occurrence Reports.

d. Records of surveillance activities, inspections and calibrations required by these Technical Specifications.

e. Records of reactor tests and experiments.

f. Records of changes made to Operating Procedures.

g. Records of radioactive shipments.

h. Records of sealed source leak tests and results.

i. Records of annual physical inventory of all source material or record.

6.10.2 The following records shall be retained for the duration of the Facility Operating License:

a. Record and drawing changes reflecting facility design modifications made to systems and equipment described in the Final Safety Analysis Report.

b. Records of new and irradiated fuel inventory, fuel transfers and assembly burnup histories.

d. Records of radiation exposure for all individuals entering radiation control areas.

e. Records of gaseous and liquid radioactive material releases to the environs.

f. Records of transient or operational cycles for those facility components designed for a limited number of transients or cycles.

g. Records of training and qualification for current members of the plant staff.

Record Retention (continued)

h. Records of in-service inspections performed pursuant to these Technical Specifications.

i. Records of Quality Assurance activities required by the QA Manual.

j. Records of reviews performed for changes made to procedures or equipment or reviews of tests and experiments pursuant to 10 CFR 50.59.

k. Records of meetings of the SNSC and the NFSC.

l. Records for Environmental Qualification which are covered under the provisions of paragraph 6.13.

m. Records of analyses required by the radiological environmental monitoring program that would permit evaluation of the accuracy of the analysis at a later date. This should include procedures effective at specified times and QA records showing that these procedures were followed.

6.11 Radiation Protection Program

Procedure for personnel radiation protection shall be prepared consistent with the requirements of 10 CFR Part 20 and shall be approved, maintained and adhered to for all operations involving personnel radiation exposure.

6.12 High Radiation Area

6.12.1 As an acceptable alternate to the "control device" or "alarm signal" required by paragraph 20.203(c)(2) of 10 CFR 20:

a. Each High Radiation Area in which the intensity of radiation is greater than 100 mrem/hr but less than 1000 mrem/hr shall be barricaded and conspicuously posted as a High Radiation Area and entrance thereto shall be controlled by issuance of a Radiation Work Permit and any individual or group of individuals permitted to enter such areas shall be provided with a radiation monitoring device which continuously indicates the radiation dose rate is the area.

b. Each High Radiation Area in which the intensity of radiation is greater than 1000 mrem/hr shall be subject to the provisions of 6.12.1(a) above, and in addition locked doors shall be provided to prevent unauthorized entry into such areas and the keys shall be maintained under the adminstrative control of the Watch Supervisor on duty.

Correction Letter
12/7/84

6.13 Environmental Qualification

6.13.1 By no later than June 30, 1982 all safety-related electrical equipment in the facility shall be qualified in accordance with the provisions of: Division of Operating Reactors "Guidelines for Evaluating Environmental Qualification of Class IE Electrical Equipment in Operating Reactors" (DOR Guidelines); or, NUREG-0588 "Interim Staff Position on Environmental Qualification of Safety-Related Electrical Equipment," December 1979. Copies of these documents are attached to Order for Modification of License No. DPR-26 dated Octovber 24, 1980.

6.13.2 By no later than December 1, 1980, complete and auditible records must be available and maintained at a central location which describe the environmental qualification method used for all safety-related electrical equipment in sufficient detail to document the degree of compliance with the DOR Guidelines or NUREG-0588. Thereafter, such records should be updated and maintained current as equipment is replaced, further tested, or otherwise further qualified.

6.14 Process Control Program (PCP)

6.14.1 License initiated changes to the PCP:

1. Shall be submitted to the Commission in the Semiannual Radioactive Effluent Release Report for the period in which the change(s) was made. This submittal shall contain:

   a. Sufficiently detailed information to totally support the rationale for the change without benefit of additional or supplemental information:

   b. A determination that the change did not reduce the overall conformance of the solidified waste product to existing criteria for solid wastes; and

   c. Documentation of the fact that the change has been reviewed and found acceptable by the (SNSC).

2. Shall become effective upon review and acceptance by the (SNSC).

6.15 Offsite Dose Calculation Manual (ODCM)

6.15.1 The ODCM shall be approved by the Commission prior to implementation.

6.15.2 License initiated changes to the ODCM:

1. Shall be submitted to the Commission in the Semiannual Radioactive Effluent Release Report for the period in which the change(s) was made effective. This submittal shall contain:

   a. Sufficiently detailed information to totally support the rationale for the change without benefit of additional or supplemental information. Information submitted should consist of a package of those pages of the ODCM to be changed with each page numbered and provided with an approval and date box, together with appropriate analyses or evaluation justifying the change(s);

   b. A determination that the change will not reduce the accuracy or reliability of dose calculations or set-point determinations; and

   c. Documentation of the fact the change has been revised and found acceptable by the (SNSC).

2. Shall become effective upon review and acceptance by the (SNSC).

6.16 Major Changes to Radioactive Liquid, Gaseous and Solid Waste

6.16.1 Licensee initiated major changes to the radioactive waste systems (liquid, gaseous and solid shall be reported to the Commission in the Semiannual Radioactive Effluent Release Report for the period in which the change was made. The discussion of each change shall contain:

a. A summary of the evaluation that led to the determination that the change could be made in accordance with 10 CFR Part 50.59.

b. Sufficient detailed information to totally support the reason for the change without benefit of additional or supplemental information;

c. A detailed description of the equipment, components and processes involved and the interfaces with other plant systems;

d. An evaluation of the change, which shows the predicted releases of radioactive materials in liquid and gaseous effluents and/or quantity of solid waste that differ from those previously predicted in the license application and amendments thereto;

e. An evaluation of the change, which shows the expected maximum exposures to individual in the Unrestricted Area and to the general population that differ from those previously estimated in the license application and amendments thereto;

f. A comparison of the predicted releases of radioactive materials, in liquid and gaseous effluents and in solid waste, to the actual releases for the period to when the changes are to be made;

g. An estimate of the exposure to plant operating personnel as a result of the change; and

h. Documentation of the fact that the change was reviewed and found acceptable by the (SNSC).

APPENDIX B

TO

FACILITY OPERATING LICENSE

FOR

CONSOLIDATED EDISON COMPANY

OF NEW YORK, INC.

INDIAN POINT NUCLEAR GENERATING

UNITS NUMBERS 1 AND 2

ENVIRONMENTAL TECHNICAL SPECIFICATION

REQUIREMENTS

PART II: RADIOLOGICAL ENVIRONMENTAL TECHNICAL

SPECIFICATION REQUIREMENTS

FACILITY LICESSES NO. DPR-5 AND DPR-26

DOCKET NUMBERS 50-3 AND 50-247

Deleted

Amendment No. 32 , Unit 1
Amendment No. 90 , Unit 2

CONTENTS

Section	Title	Page
1	INTRODUCTION	1
	1.1 Purpose of Review	1
	1.2 Generic Background	1
	1.3 Plant-Specific Background	3
2	REVIEW CRITERIA	6
3	TECHNICAL EVALUATION	8
	3.1 General Description of Radiological Effluent System	8
	3.2 Radiological Effluent Technical Specifications	12
	3.3 Offsite Dose Calculation Manual	19
4	CONCLUSIONS	23
5	REFERENCES	26

FIGURES

Number	Title	Page
1	Liquid Radwaste Treatment Systems, Effluent Paths, and Controls for Indian Point Nuclear Power Plant Unit 2 . . .	9
2	Gaseous Radwaste Treatment Systems, Effluent Paths, and Controls for Indian Point Nuclear Power Plant Unit 2 . . .	11

TABLE

Number	Title	Page
1	Evaluation of Proposed Radiological Effluent Technical Specifications (RETS), Indian Point Nuclear Power Plant Unit 2 .	24

FOREWORD

This Technical Evaluation Report was prepared by Franklin Research Center under a contract with the U.S. Nuclear Regulatory Commission (Office of Nuclear Reactor Regulation, Division of Operating Reactors) for technical assistance in support of NRC operating reactor licensing actions. The technical evaluation was conducted in accordance with criteria established by the NRC.

1. INTRODUCTION

1.1 PURPOSE OF REVIEW

The purpose of this technical evaluation report (TER) is to review and evaluate the proposed changes in the Technical Specifications of the Indian Point Nuclear Power Plant Unit 2 with regard to Radiological Effluent Technical Specifications (RETS) and the Offsite Dose Calculation Manual (ODCM). The TER, however, does not address the corresponding proposed changes in the Technical Specifications for Indian Point Nuclear Power Plant Unit 1 which were part of the Licensee's submittal but outside the scope of FRC's RETS review.

The evaluation uses criteria proposed by the NRC staff in the model technical specifications for pressurized water reactors (PWRs), NUREG-0472 [1]. This effort is directed toward the NRC objective of implementing RETS which comply principally with the regulatory requirements of the Code of Federal Regulations, Title 10, Part 50 (10CFR50), "Domestic Licensing of Production and Utilization Facilities," Appendix I [2]. Other regulations pertinent to the control of effluent releases are also included within the scope of compliance.

1.2 GENERIC BACKGROUND

Since 1970, 10CFR50, Section 50.36a, "Technical Specifications on Effluents from Nuclear Power Reactors," has required licensees to provide technical specifications which ensure that radioactive releases will be kept as low as reasonably achievable (ALARA). In 1975, numerical guidance for the ALARA requirement was issued in 10CFR50, Appendix I. The licensees of all operating reactors were required [3] to submit, no later than June 4, 1976, their proposed ALARA Technical Specifications and information for evaluation in accordance with 10CFR50, Appendix I.

However, in February 1976, the NRC staff recommended that proposals to modify Technical Specifications be deferred until the NRC completed the model RETS. The model RETS deals with radioactive waste management systems and

environmental monitoring. Although the model RETS closely parallels 10CFR50, Appendix I requirements, it also includes provisions for addressing other issues.

These other issues are specifically stipulated by the following regulations:

- 10CFR20 [4], "Standards for Protection Against Radiation," Paragraphs 20.105(c), 20.106(g), and 20.405(c) require that nuclear power plants and other licensees comply with 40CFR190 [5], "Environmental Radiation Protection Standards for Nuclear Power Operations," and submit reports to the NRC when the 40CFR190 limits have been or may be exceeded.

- 10CFR50, Appendix A [6], "General Design Criteria for Nuclear Power Plants," contains Criterion 60 - Control of releases of radioactive materials to the environment; Criterion 63 - Monitoring fuel and waste storage; and Criterion 64 - Monitoring radioactivity releases.

- 10CFR50, Appendix B [7], establishes the quality assurance required for nuclear power plants.

The NRC position on the model RETS was established in May 1978 when the NRC's Regulatory Requirements Review Committee approved the model RETS: NUREG-0472 for PWRs [1] and NUREG-0473 [8] for boiling water reactors (BWRs). Copies were sent to licensees in July 1978 with a request to submit proposed site-specific RETS on a staggered schedule over a 6-month period. Licensees responded with requests for clarifications and extensions.

The Atomic Industrial Forum (AIF) formed a task force to comment on the model RETS. NRC staff members first met with the AIF task force on June 17, 1978. The model RETS was subsequently revised to reflect comments from the AIF and others. A principal change was the transfer of much of the material concerning dose calculations from the model RETS to a separate ODCM.

The revised model RETS was sent to licensees on November 15 and 16, 1978 with guidance (NUREG-0133 [9]) for preparation of the RETS and the ODCM and a new schedule for responses, again staggered over a 6-month period.

Four regional seminars on the RETS were conducted by the NRC staff during November and December 1978. Subsequently, Revision 2 of the model RETS, additional guidance on the ODCM, and a Process Control Program (PCP) were

issued in February 1979 to each utility at individual meetings. In response to the NRC's request, operating reactor licensees have subsequently submitted initial proposals on plant RETS and the ODCM. Review leading to ultimate implementation of these documents was initiated by the NRC in 1981 using subcontracted independent teams as reviewers.

As the RETS review process has progressed since September 1981, feedback from the licensees has led the NRC to believe that modification to some provisions in the current version of Revision 2 is needed to better clarify specific concerns of the licensees and thus expedite the entire review process. Starting in April 1982, NRC distributed revised versions of RETS in draft form to the licensees during the site visits. The new guidance on these changes was presented in the AIF meeting on May 19, 1982 [10]. Some interim changes regarding the Radiological Environmental Monitoring Section were issued in August 1982 [11]. With the incorporation of these new changes, NRC issued, in September 1982, a draft version of NUREG-0472, Revision 3 [12], to serve as new guidance for the review teams.

1.3 PLANT-SPECIFIC BACKGROUND

In conformance with the 1975 directive [3], Consolidated Edison Company of New York (Con Edison), the Licensee for Indian Point Nuclear Power Plant Unit 2, submitted information for 10CFR50, Appendix I Evaluation, dated March 14, 1977 [13].

The RETS were addressed in the next submittal by the Licensee, dated July 20, 1979 [14], in response to the November 15-16, 1978 NRC request. An ODCM was not submitted at that time but was later submitted on April 1, 1983 [15]. On May 14, 1982, Franklin Research Center (FRC), selected as an independent reviewer, initiated a review and evaluation of the RETS and ODCM submittals. These submittals were compared to the model RETS [1] and to the general provisions for the ODCM [16] which were given to each operating reactor (OR) as guidelines for preparing the RETS and the ODCM. The Licensee's RETS and ODCM submittals were assessed for compliance with the requirements of 10CFR50, Appendix I, and the "General Design Criteria," 10CFR50, Appendix A.

Copies of the draft review report for the RETS submittal dated July 16, 1982 [17] were delivered to the NRC and to the Licensee prior to a site visit to the Indian Point site in Buchanan, NY. The purpose of the site visit was to resolve questions raised in the draft review report for the RETS submittal and to discuss the requirements for the ODCM and obtain a commitment for an ODCM submittal.

The site visit was conducted on September 29-30, 1982. Discussions were held with Con Edison and Indian Point Unit 2 personnel to review the RETS and ODCM requirements. Agreement was reached on most items discussed at the meetings, at which time the Licensee made a commitment to resubmit the RETS and to prepare and submit an ODCM following NRC guidance. A trip report was prepared and delivered to the NRC on October 22, 1982 [18]. The report included the resolutions reached, as well as "open items" to be resolved by the NRC with the Licensee.

Under a cover letter dated February 1, 1983, Con Edison delivered its final proposed RETS [19] to the NRC. Copies of this submittal were delivered to FRC [20] on February 23, 1983, and the final review was initiated. The proposed RETS was reviewed and evaluated based on the draft model RETS, NUREG-0472, Revision 3 [12], and comments on the proposed RETS were supplied to the NRC on April 21, 1983 [21]. Under a cover letter dated April 1, 1983 [15], Con Edison delivered its proposed ODCM to the NRC, and it was evaluated in accordance with the existing guidelines specified by NUREG-0133 [9]. It is anticipated that a process control program will be submitted by the end of September. It will be reviewed and the results of the review issued as a supplement to this TER.

Details of the RETS review are documented in the comparison copy [22], which incorporates comments and resolutions obtained from the NRC staff [23].

Indian Point Unit 2 shares the same site with two other nuclear power plant units, i.e., Indian Point Unit 1, which is in a permanent shutdown mode (license terminated June 19, 1980), and Indian Point Unit 3, which is owned and operated by the Power Authority of the State of New York. Since Indian Point Units 1 and 2 have shared radwaste systems and shared effluent release

points, the Licensee has elected to include certain radiological effluent technical specifications which are applicable to Unit 1 in the proposed Unit 2 RETS submittal.

This evaluation is limited to the Indian Point Unit 2 RETS submittal, which is Attachment B to the Licensee's February 1, 1983 submittal [19].

2. REVIEW CRITERIA

Review criteria for the RETS and ODCM were provided by the NRC in three documents:

NUREG-0472, RETS for PWRs

NUREG-0473, RETS for BWRs

NUREG-0133, Preparation of RETS for Nuclear Power Plants.

Twelve essential criteria are given for the RETS and ODCM:

1. All significant releases of radioactivity shall be controlled and monitored.

2. Offsite concentrations of radioactivity shall not exceed the 10CFR20, Appendix B, Table II limits.

3. Offsite radiation doses shall be ALARA.

4. Equipment shall be maintained and used to keep offsite doses ALARA.

5. Radwaste tank inventories shall be limited so that failures will not cause offsite doses exceeding 10CFR20 limits.

6. Hydrogen and/or oxygen concentrations in the waste gas system shall be controlled to prevent explosive mixtures.

7. Wastes shall be processed to shipping and burial ground criteria under a documented program, subject to quality assurance verification.

8. An environmental monitoring program, including a land-use census, shall be implemented.

9. The radwaste management program shall be subject to regular audits and reviews.

10. Procedures for control of liquid and gaseous effluents shall be maintained and followed.

11. Periodic and special reports on environmental monitoring and on releases shall be submitted.

12. Offsite dose calculations shall be performed using documented and approved methods consistent with NRC methodology.

Subsequent to the publication of NUREG-0472 and NUREG-0473, the NRC staff issued guidelines [24, 25], clarifications [26, 27], and branch positions [28, 29, 30] establishing a policy that requires the licensees of operating reactors to meet the intent, if not the letter, of the model RETS provisions. The NRC branch positions issued since the RETS implementation review began have clarified the model RETS implementation for operating reactors.

Review of the ODCM will be based on the following NRC guidelines: Branch Technical Position, "General Content of the Offsite Dose Calculation Manual" [16]; NUREG-0133 [9]; and Regulatory Guide 1.109 [31]. The ODCM format is left to the Licensee and may be simplified by tables and grid printouts.

3. TECHNICAL EVALUATION

3.1 GENERAL DESCRIPTION OF RADIOLOGICAL EFFLUENT SYSTEMS

This section briefly describes the liquid and gaseous radwaste effluent systems, release paths, and control systems installed at Indian Point Nuclear Power Plant Unit 2, which is a pressurized water reactor.

3.1.1 Radioactive Liquid Effluent

The Unit 2 liquid radwaste treatment system, which contains components from Unit 1, has the capability to collect, treat, store, and dispose of most radioactive liquid wastes. The wastes are collected in sumps and drain tanks in the various buildings and are then transferred to the appropriate tanks in the radwaste area for further treatment, temporary storage, and disposal. The processed liquid wastes are either returned to the chemical and volume control system or released to the environment through the discharge canal. Batches of radioactive liquid waste are discharged to the Hudson River if the concentration of radioactive materials is within the allowable limits.

A diagram of the liquid effluent release paths indicating the location of the liquid effluent monitors is shown in Figure 1. The radioactive liquid wastes originating from the primary drains, equipment drains, floor drains, regenerate waste, and chemical waste are collected in the waste condensate tank and waste holdup tank. Liquid waste from the waste condensate tank is monitored and controlled by the waste disposal liquid effluent monitor (R-18). Liquid waste from the waste holdup tank is processed through evaporators and is monitored and controlled by the steam generator blowdown effluent monitor (R-19) prior to release to the environment. Liquid waste from the steam generator blowdown can also be collected in the waste holdup tank after filtration and demineralization if further processing is required. Liquid waste from the steam generator blowdown that does not require further processing is monitored by the Unit 1 secondary boiler blowdown purification system (SBBPS) effluent monitor. The turbine building floor drains are imbedded in the concrete foundation and, hence, inaccessible and unmonitored.

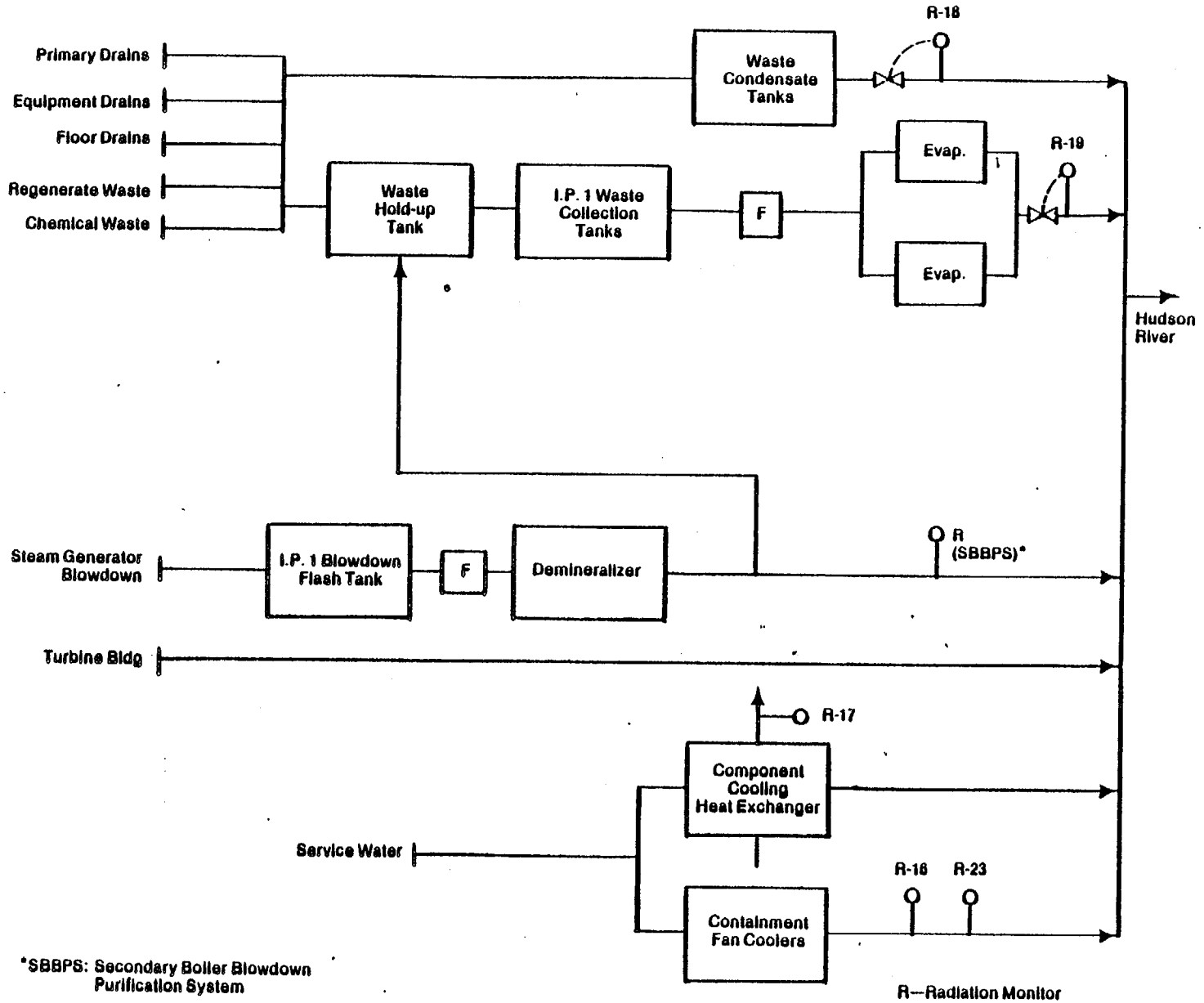

Figure 1. Liquid Radwaste Treatment Systems, Effluent Paths, and Controls for Indian Point Nuclear Power Plant Unit 2

The floor drains are discharged to the environment without processing due to the normally low radioactive concentration in the turbine building sumps. Potential leakage of radioactive material into the service water effluent system is monitored by service water system effluent monitors (R-16 and R-23) which are downstream of the containment fan coolers. As a safety feature, the waste disposal liquid effluent monitor and steam generator blowdown effluent monitor are provided with automatic termination of release upon a high concentration alarm signal.

3.1.2 Radioactive Gaseous Effluent

Airborne particulates and gases vented from process equipment and building ventilation exhaust air are the normal sources of radioactive gaseous effluents from the Indian Point site. The major source from Indian Point Unit 2 is the waste gas holdup system, which contains waste gas compressors and four large gas decay tanks and six small gas decay tanks to provide sufficient holdup to ensure that releases are ALARA.

A diagram of the radioactive gaseous effluents indicating the location of effluent radiation monitors and process treatment equipment is shown in Figure 2. Indian Point Unit 2 has a plant vent which is a combined release point for the major sources of gaseous effluents from the plant. Other gaseous effluent releases from the site addressed by the radiological effluent technical specifications for Indian Point Unit 2 are releases from the Unit 1 plant stack and the steam generator flash tank vents. Releases from the plant vent and the Unit 1 plant stack are monitored; releases from the steam generator flash tank vents are unmonitored.

The plant vent is comprised of the following effluent substreams: waste gas holdup system, vent header, auxiliary building, fuel storage building, radwaste area, containment purge, and the condenser air ejector discharge. The containment purge discharge is monitored by the containment air particulate and gas monitors (R-11 and R-12); the condenser air ejector discharge is monitored by the air ejector noble gas monitor (R-15); and the waste gas decay tanks activity inventory is monitored by the waste disposal

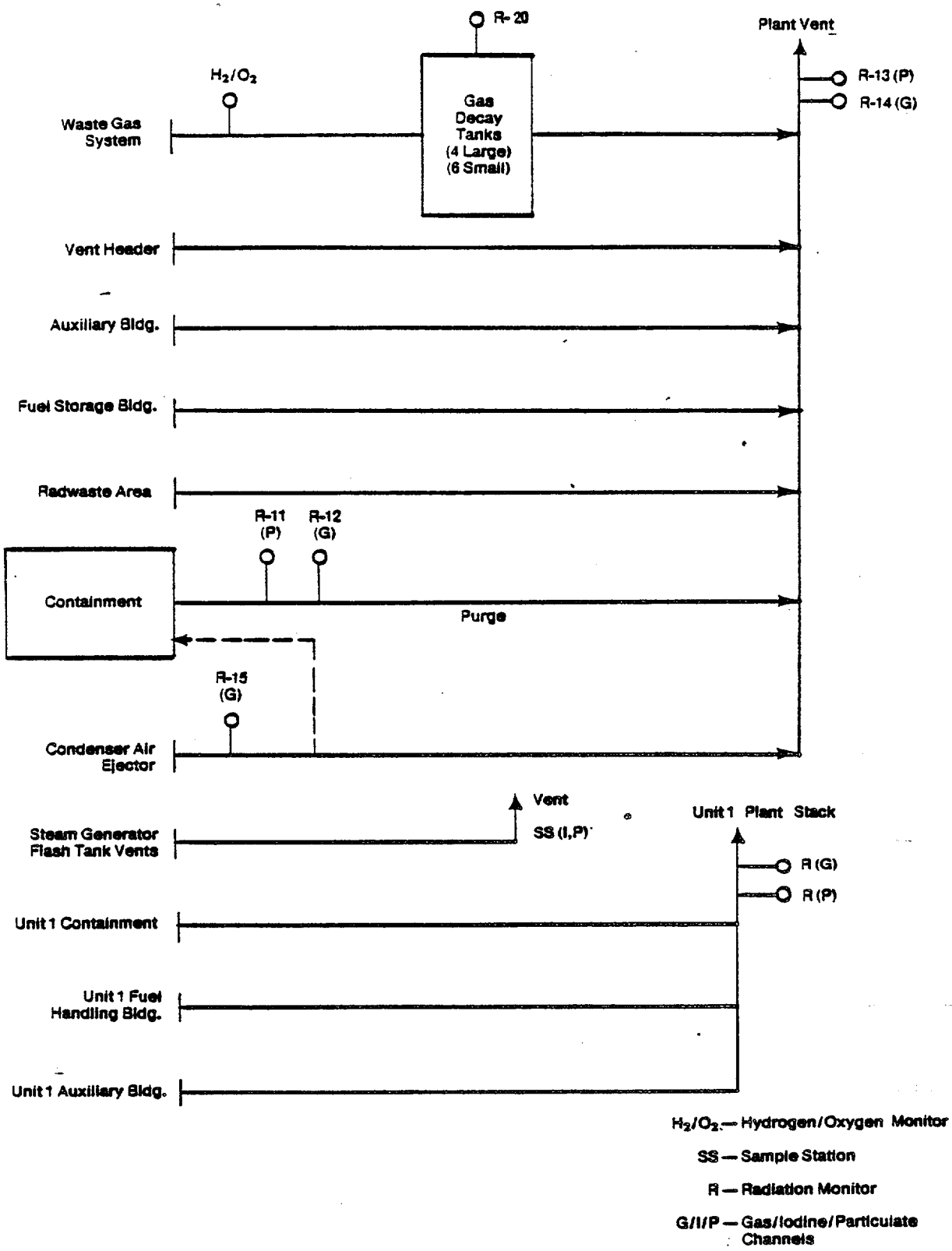

Figure 2. Gaseous Radwaste Treatment Systems, Effluents Paths, and Controls for Indian Point Nuclear Power Plant Unit 2

gas monitor (R-20). The plant vent effluent release point is provided with particulate and gas effluent monitors (R-13 and R-14).

The Unit 1 plant stack is comprised of the following effluent substreams: Unit 1 containment, Unit 1 fuel handling building, and the Unit 1 auxiliary building. The Unit 1 plant stack is provided with a particulate and gas effluent monitor. Releases from the steam generator flash tank vents are not monitored but are provided with a sample point for sampling iodine and particulate airborne radioactivity.

3.2 RADIOLOGICAL EFFLUENT TECHNICAL SPECIFICATIONS

The evaluation of the Licensee's proposed RETS against the provisions of NUREG-0472 included the following:

- a review of information provided by the Licensee in the 1979 proposed RETS submittal [14]
- resolution of problem areas in that submittal by means of a site visit [18]
- review of the Licensee's February 1, 1983 final RETS submittal [19].

3.2.1 Effluent Instrumentation

The objective of the RETS with regard to effluent instrumentation is to ensure that all significant liquid and gaseous effluent releases are monitored. The RETS specify that all effluent monitors be operable and that alarm/trip setpoints be determined in order to ensure that radioactive levels do not exceed the maximum permissible concentration (MPC) set by 10CFR20. To further ensure that the instrumentation functions properly, surveillance requirements are also needed in the specifications.

In Section 3.9.A.2 of the submittal, the Licensee specified liquid effluent monitors with automatic termination of release and associated flow rate measurement devices for the liquid radwaste effluent line and the steam generator blowdown effluent line. The Licensee also specified liquid effluent monitors for the service water system effluent line and the Unit 1 SBBPS

effluent line. Tank level indicating devices have been provided for those tanks that are not surrounded by liners, dikes, or walls capable of holding the tank contents and that do not have tank overflows and surrounding area drains connected to the liquid radwaste treatment system. The Licensee is not able to provide a radiation monitor for the turbine building sump effluent lines because these lines are imbedded in concrete and are inaccessible. The Licensee is also not able to provide continuous composite samplers as specified in the model RETS. The liquid effluent monitoring instrumentation meets the intent of NUREG-0472 on an interim basis until an NRC position is established on the turbine building sump effluent line monitoring requirements.

In Section 3.9.B.2 of the submittal, the Licensee specified gaseous effluent radiation monitors for the two major gaseous effluent release points from the plant, i.e., the plant vent and the Unit 1 plant stack. The Licensee also provided noble gas activity monitors for the condenser air ejector discharge and for the waste gas holdup system to measure activity inventory in the decay tanks; this provision meets the intent of NUREG-0472.

In Section 4.10.A.3 and 4.10.B.3 of the submittal, adequate surveillance requirements were specified for the liquid and gaseous effluent monitoring instrumentation; these provisions meet the intent of NUREG-0472.

3.2.2 Concentration and Dose Rates of Effluents

3.2.2.1 Liquid Effluent Concentration

In Section 3.9.A.1 of the submittal, the Licensee made a commitment to maintain the concentration of radioactive liquid effluents released from the site to unrestricted areas to within 10CFR20 limits, and if the concentration of liquid effluents to unrestricted area exceeds these limits, to restore it without delay to a value equal to or less than the MPC values specified in 10CFR20. Both batch and continuous releases are sampled and analyzed periodically in accordance with a sampling and analysis program (Table 4.10-1 of the Licensee's submittal), which meets the intent of NUREG-0472.

3.2.2.2 Gaseous Effluent Dose Rate

In Section 3.9.B.1 of the submittal, the Licensee made a commitment to maintain the offsite gaseous dose rate from the site to areas at and beyond the site boundary to within 10CFR20 limits, and if the concentration of gaseous effluents exceeds these limits or the equivalent dose values, to restore it without delay to a value equal to or less than these limits.

The radioactive gaseous waste sampling and analysis program (Table 4.10-3 of the Licensee's submittal) provides adequate grab and continuous sampling and analysis of the waste gas storage tanks, containment purge, condenser air ejector, plant vent, and the Unit 1 stack vent, and therefore meets the intent of NUREG-0472.

3.2.3 Offsite Doses from Effluents

The objective of the RETS with regard to offsite doses from effluents is to ensure that offsite doses are kept ALARA, are in compliance with the dose specifications of NUREG-0472, and are in accordance with 10CFR50, Appendix I, and 40CFR190. The Licensee made a commitment to meet the quarterly and yearly dose limits for (1) liquid effluents, per Section 3.11.2 [12]; (2) air doses for beta and gamma radiation in unrestricted areas due to noble gases as specified in 10CFR50, Appendix I, Section II.B; and (3) dose to any member of the public from releases of iodine-131, tritium, and particulates with half-lives greater than 8 days within the design objectives of 10CFR50, Appendix I, Section II.C. The Licensee made a commitment to limit the annual dose or dose commitment to any member of the public due to releases of radioactivity and radiation from uranium fuel cycle sources to within the requirements of 40CFR190. The Licensee also made a commitment to perform the dose calculations according to methods and parameters given in the ODCM. This commitment satisfies the intent of NUREG-0472.

3.2.4 Effluent Treatment

The objective of the RETS with regard to effluent treatment is to ensure that wastes are treated to keep releases ALARA and to satisfy the provisions

for technical specifications governing the maintenance and use of radwaste treatment equipment. The Licensee made a commitment to use the liquid and gaseous radwaste treatment system when the projected doses averaged over 31 days exceed 25% of the annual dose design objectives, prorated monthly. The Licensee also made a commitment to use the gaseous radwaste treatment system and the ventilation exhaust treatment system if the monthly projected dose exceeds the limits prescribed in NUREG-0472. This commitment meets the intent of 10CFR50, Appendix I, Section II.D. The Licensee also made a commitment to project the monthly dose in accordance with the ODCM; this also meets the intent of NUREG-0472.

3.2.5 Tank Inventory Limits

The objective of the RETS with regard to tank inventory limits is to ensure that the rupture of a radwaste tank would not cause offsite doses greater than the limits set in 10CFR20 for nonoccupational exposure. In Sections 3.9.A.5 and 3.9.B.7 of the Licensee's submittal, a commitment was made to limit the radioactive inventory of all unprotected outdoor liquid tanks listed in the specifications to less than 10 curies (excluding tritium and dissolved or entrained noble gases), and each gas storage tank to less than 30,000 curies of noble gases (considered as xenon-133). The Licensee made a commitment to a sampling program of the unprotected outdoor liquid holdup tanks and the gas storage tanks to ensure that the radioactive content of the tanks does not exceed the specified limits. The Licensee's commitment to comply with tank inventory limits satisfies the intent of NUREG-0472.

3.2.6 Explosive Gas Mixtures

The objective of the RETS with regard to explosive gas mixtures is to prevent hydrogen explosions in the waste gas system. The waste gas holdup system is a hydrogen-rich system not designed to withstand a hydrogen explosion; therefore, Section 3/4.11.2.5B of the model RETS [12] applies to this submittal. In Section 3.9.B.6 of the Licensee's submittal, a commitment

was made to limit the concentration of oxygen in the waste gas holdup system to less than 2% by volume whenever the hydrogen concentration exceeds 4% by volume. Hydrogen and oxygen monitors are provided to continuously monitor for the possibility of an explosive gas mixture concentration in the waste gas holdup system. The Licensee action specification states that the oxygen concentration will be reduced to appropriate concentration levels when trigger levels are exceeded as specified in the model RETS [12]. In Table 3.9.2, Radioactive Gaseous Effluent Monitoring Instrumentation, redundant channels are not provided as specified in the model RETS [12]; however, the present system meets the intent of the model RETS on an interim basis according to the current NRC staff position on explosive gas monitoring for PWRs [25].

3.2.7 Solid Radwaste System

The objective of the RETS with regard to the solid radwaste system is to ensure that radwaste will be properly processed and packaged before it is shipped to a burial site, in accordance with 10CFR71 and Specification 3.11.3 of NUREG-0472. In Sections 3.9.D and 4.10.D of the Licensee's submittal, a commitment was made to use the solid radwaste system to process wet radioactive waste in accordance with a process control program to ensure that the shipping and burial ground requirements are met. The process control program is used to verify the solidification of test specimens representative of wet radioactive waste. The process control program ensures that radwaste is properly processed and packaged before it is shipped to the burial site. The proposed technical specification for solid radioactive waste meets the intent of NUREG-0472.

3.2.8 Radiological Environmental Monitoring Program

The objectives of the RETS with regard to environmental monitoring are to ensure that (1) an adequate full-area-coverage (land and water inclusive) monitoring program exists; (2) the requirements of 10CFR50, Appendix I for technical specifications on environmental monitoring are satisfied; and (3)

the Licensee maintains both a land-use census and interlaboratory comparison program.

The Licensee followed NUREG-0472 guidelines, including the Branch Technical Position dated November 1979 [29], and provided an adequate number of sample locations for pathways identified.

The 40 thermoluminescent dosimeter (TLD) monitoring stations proposed by the Licensee satisfy the specification of NUREG-0472. The Licensee's method of analysis and maintenance of the monitoring program satisfy the requirements of Appendix I, 10CFR50. The Licensee also made a commitment to describe the specific sample locations in the ODCM. This commitment meets the intent of NUREG-0472.

The commitments to a yearly land-use census within NUREG-0472 specifications and to an ongoing interlaboratory comparison program equivalent to the model RETS guidelines on environmental monitoring meet the intent of NUREG-0472.

3.2.9 Audits and Reviews

The objective of the RETS with regard to audits and reviews is to ensure that audits and reviews of the radwaste and environmental monitoring programs are properly conducted. The Licensee's administrative structure designates the station nuclear safety committee (SNSC) and the nuclear facility safety committee (NFSC) as the two groups responsible for reviews and audits, respectively. In Section 6.5.1.6 of the Licensee's submittal, a commitment was made for review of changes to the process control program and the offsite dose calculation manual and for review of unplanned releases to the environment by the station nuclear safety committee. In Section 6.5.2.8 of the Licensee's submittal, a commitment was made to perform periodic audits of the ODCM, the PCP, the quality assurance program (QA) for effluent and environment monitoring, and the radiological environmental monitoring program by the nuclear facility safety committee. The audit and review requirements meet the intent of NUREG-0472.

3.2.10 Procedures and Records

The objective of the RETS with regard to procedures is to satisfy the provisions for written procedures for implementing the ODCM, the PCP, and the QA program. It is also an objective of RETS to properly retain the documented records related the environmental monitoring program and certain QA procedures. In Section 6.8 of the submittal, the Licensee made a commitment to establish, implement, and maintain written procedures for the PCP, the ODCM, and the QA programs which satisfy the provisions of NUREG-0472. The Licensee also made a commitment to retain the records of the radiological environmental monitoring program, and this commitment meets the intent of NUREG-0472.

3.2.11 Reports

In addition to the reporting requirements of Title 10, Code of Federal Regulations (10CFR), the objective of the RETS with regard to administrative controls is also to ensure that appropriate periodic and special reports are submitted to the NRC.

The Licensee made a commitment to follow applicable reporting requirements stipulated by 10CFR regulations and also the following reports specified by NUREG-0472:

1. Annual radiological environmental operating report. In Section 6.9.1.5 of the Licensee's submittal, a commitment was made to provide an annual radiological environmental operating report that includes summaries, interpretations, and statistical evaluation of the results of the environmental surveillance program. The report also includes the results of land use censuses, and participation in an inter-laboratory comparison program specified by Specification 3.12.3 of NUREG-0472.

2. Semiannual radioactive and solid waste release reports. In Section 6.9.1.6 of the Licensee's submittal, a commitment was made to provide semiannual radioactive effluent and solid waste release reports which include a summary of radioactive liquid and gaseous effluents and solid waste released, an assessment of offsite doses, and a list of unplanned releases. Listing of new locations for dose calculations identified by the land use census as well as any changes to ODCM are also included in the report.

3. Special Report. In Section 6.9.2 of the Licensee's submittal, a commitment was made to file a 30-day special report to the NRC under the following conditions as prescribed by the proposed specifications:

   - exceeding radioactive liquid effluent limits according to:

     Dose, Specification 3.9.A.3
     Liquid Waste Treatment, Specification 3.9.A.4

   - exceeding radioactive gaseous effluent limits according to:

     Dose, Specifications 3.9.B.3 and 3.9.B.4
     Gaseous Waste Treatment, Specification 3.9.B.5

   - exceeding radioactive effluent limits according to:

     Uranium Fuel Cycle Dose Commitment, Specification 3.9.C

   - exceeding the reporting levels of Table 4.12-2 for the radioactivity measured in the environmental sampling medium, Specification 4.11.

These reporting commitments have satisfied the provisions of NUREG-0472.

3.2.12 Implementation of Major Programs

One objective of the administrative controls is to ensure that implementation of major programs such as the PCP, ODCM, and major changes to the radioactive waste treatment system follows appropriate administrative procedures. The Licensee made a commitment to review, report, and implement major programs such as the PCP, ODCM, and major changes to the radioactive waste treatment system. This commitment meets the intent of NUREG-0472.

3.3 OFFSITE DOSE CALCULATION MANUAL (ODCM)

As specified in NUREG-0472, the ODCM is to be developed by the Licensee to document the methodology and approaches used to calculate offsite doses and maintain the operability of the effluent system. As a minimum, the ODCM should provide equations and methodology for the following topics:

- alarm and trip setpoint on effluent instrumentation
- liquid effluent concentration in unrestricted areas

- gaseous effluent dose rate at or beyond the site boundary
- liquid and gaseous effluent dose contributions
- liquid and gaseous effluent dose projections.

In addition, the ODCM should contain flow diagrams, consistent with the systems being used at the station, defining the treatment paths and the components of the radioactive liquid, gaseous, and solid waste management systems. A description and the location of samples in support of the environmental monitoring program are also required in the ODCM.

3.3.1 Evaluation

The Licensee followed the methodology of NUREG-0133 [9] to determine the alarm and trip setpoints for the liquid and gaseous effluent monitors. To ensure that the MPC, as specified in 10CFR20, will not be exceeded even in the case of simultaneous discharge, the Licensee will administratively control the setpoints to allocate a percentage of the total allowable release to each of the release sources.

The Licensee demonstrated the method of calculating the radioactive liquid concentration by describing in the ODCM the means of determining dilution parameters to ensure that liquid releases are maintained below MPC limits in unrestricted areas upon discharge into the Hudson River Estuary. The method provides added assurance of compliance with 10CFR20 for liquid releases.

Methods are also included for showing that dose rates at or beyond the site boundary due to noble gases, iodine-131, tritium, and radionuclides in particulate form with half-lives greater than 8 days are in compliance with 10CFR20. In this calculation, the Licensee considered effluent releases from the plant vent, stack vent, and unmonitored sources (such as the steam generator blowdown and purification system flash tank vent and the secondary boiler blowdown purification system flash tank vent); releases from the stack vent are treated as an elevated release, and releases from the plant vent and unmonitored sources are treated as ground level. In all cases, the Licensee

used the highest annual average values of relative concentration (X/Q) and relative deposition (D/Q) to determine the controlling locations. The Licensee intends to use the maximally exposed individual and the critical organ as the reference receptor. For noble gases, the Licensee considered the total body dose and the skin dose resulting from gamma and beta radiation, respectively. For iodine-131, tritium, and particulates, the Licensee considered the inhalation pathway for estimating the doses. The Licensee demonstrated that the described methods and relevant parameters have followed the conservative approaches provided by NUREG-0133 and Regulatory Guide 1.109.

Evaluation of the cumulative dose is to ensure that the quarterly and annual dose design objectives specified in RETS are not exceeded.

For liquid releases, the Licensee identified freshwater fish and shellfish consumption as the main pathway. In the calculation, the Licensee used a near-field dilution factor specific to the plant; all other key parameters follow the suggested values given in Regulatory Guide 1.109. The Licensee used the maximally exposed adult individual as the reference receptor. To correctly assess the cumulative dose, the Licensee intends to estimate the dose once per 31 days.

Evaluation of the cumulative dose from noble gas releases includes both beta and gamma and air doses at and beyond the site boundary. The critical organs under consideration are the total body and skin for gamma and beta radiation, respectively. Again, the Licensee used the maximum X/Q values as discussed earlier and followed the methodology and parameters of NUREG-0133 and Regulatory Guide 1.109.

For iodine-131, tritium, and particulates with half-lives greater than 8 days, the Licensee provided a method to demonstrate that cumulative doses calculated from the release meet both quarterly and annual design objectives. The Licensee demonstrated a method of calculating the dose using maximum annual average X/Q values for the inhalation pathway and included D/Q values for the ground plane deposition pathway and the grass-cow-milk pathway, for which the Licensee considered the thyroid to be the critical organ and

calculates doses for all age groups. This approach is consistent with the methodology of NUREG-0133.

Using the existing methodology for gaseous and liquid dose calculations, the Licensee demonstrated a procedure to project the monthly dose and to ensure that the design objectives for the liquid radwaste system and the gaseous radwaste system are not exceeded.

The Licensee provided a description of sampling locations in the ODCM and identified them in Section 13 of that document. This description is consistent with the sampling locations specified in the Licensee's RETS Table 4.11-1 on environmental monitoring.

The Licensee did not provide flow diagrams defining the effluent paths and components of the radioactive liquid and gaseous waste treatment systems as specified in the Branch Technical Position, "General Content of the Offsite Dose Calculation Manual" [16].

In summary, the Licensee's ODCM uses documented and approved methods that are consistent with the methodology and guidance in NUREG-0133 and, with the exception of the omitted flow diagrams, the ODCM is an acceptable reference.

4. CONCLUSIONS

Table 1 summarizes the results of the final review and evaluation of the submittal for Indian Point Nuclear Power Plant Unit 2. The Licensee made one radiological effluent technical specifications (RETS) submittal for Unit 2 [19]. The offsite dose calculation manual (ODCM) was submitted under a separate cover [15].

The following conclusions have been reached:

1. The Licensee's proposed RETS, submitted February 1, 1983, meets the intent of the NRC staff's "Standard Radiological Effluent Technical Specifications," NUREG-0472, for Indian Point Nuclear Power Plant Unit 2.

2. The Licensee's ODCM, submitted April 1, 1983, uses documented and approved methods that are consistent with the criteria of NUREG-0133 and applicable to Indian Point Nuclear Power Plant Unit 2, with the following exception:

   - The proposed ODCM does not provide flow diagrams defining the effluent paths and components of the radioactive liquid and gaseous waste treatment systems as specified in the Branch Technical Position, "General Content of the Offsite Dose Calculation Manual."

Table 1. Evaluation of Proposed Radiological Effluent Technical Specifications (RETS), Indian Point Unit 2

	Technical Specifications		Replaces or Updates Existing Tech. Specs.	
	NRC Staff Std. RETS NUREG-0472 (Section)*	Licensee Proposal (Section)	(Section)	Evaluation
Effluent Instrumentation	3/4.3.3.3.10 3/4.3.3.3.11	3.9.A.2, 4.10.A 3.9.B.2, 4.10.B	2/3.4.1 2/3.4.2 (Appendix B)	Meets the intent of NRC criteria
Radioactive Effluents	3/4.11.1.1 3/4.11.2.1	3.9.A.1, 4.10.A 3.9.B.1, 4.10.B	2/3.4.1 2/3.4.2 (Appendix B)	Meets the intent of NRC criteria in the interim
Offsite Doses	3/4.11.1.2, 3/4.11.2.2, 3/4.11.2.3, 3/4.11.4	3.9.A.3, 4.10.A 3.9.B.3, 4.10.B 3.9.B.4, 4.10.C 3.9.C	2/3.4.1 2/3.4.2 (Appendix B)	Meets the intent of NRC criteria
Effluent Treatment	3/4.11.1.3 3/4.11.2.4	3.9.A.4, 4.10.A 3.9.B.5, 4.10.B	2/3.4.1 2/3.4.2 (Appendix B)	Meets the intent of NRC criteria
Tank Inventory Limits	3/4.11.1.4 3/4.11.2.6	3.9.A.5, 4.10.A 3.9.B.7, 4.10.B	2/3.4.1 2/3.4.2 (Appendix B)	Meets the intent of NRC criteria
Explosive Gas Mixtures	3/4.11.2.5B	3.9.B.6, 4.10.B	Not Addressed	Meets the intent of NRC criteria in the interim
Solid Radioactive Waste	3/4.11.3	3.9.D, 4.10.D	2.4.3 (Appendix B)	Meets the intent of NRC criteria
Environmental Monitoring	3/4.12.1	4.11	4.2 (Appendix B)	Meets the intent of NRC criteria
Audits and Reviews	6.5.1, 6.5.2	6.5.1, 6.5.2	6.5.1 6.5.2 (Appendix A)	Meets the intent of NRC criteria
Procedures and Records	6.8, 6.10	6.8, 6.10	6.8, 6.10 (Appendix A)	Meets the intent of NRC criteria

*Section number sequence is according to NUREG-0472, Rev. 3 [12].

Table 1 (Cont.)

	Technical Specifications		Replaces or Updates Existing Tech. Specs.	
	NRC Staff Std. RETS NUREG-0472 (Section)*	Licensee Proposal (Section)	(Section)	Evaluation
Reports	6.9.1.9, 6.9.1.11, 6.9.1.12, 6.9.2	6.9.1.5, 6.9.1.6, 6.9.2	5.6.1.1, 5.6.1.2, 5.6.2.1, 5.6.2.2 (Appendix B)	Meets the intent of NRC criteria
Implementation of Major Programs	6.13, 6.14, 6.15	6.14, 6.15, 6.16	Not addressed	Meets the intent of NRC criteria

5. REFERENCES

1. "Radiological Effluent Technical Specifications for Pressurized Water Reactors," Rev. 2
   NRC, July 1979
   NUREG-0472

2. Title 10, Code of Federal Regulations, Part 50, Appendix I, "Numerical Guides for Design Objectives and Limiting Conditions for Operation to Meet the Criterion, 'As Low As Is Reasonably Achievable,' for Radioactive Material in Light-Water-Cooled Nuclear Power Reactor Effluents"

3. Title 10, Code of Federal Regulations, Part 50, Appendix I, Section V, "Effective Dates"

4. Title 10, Code of Federal Regulations, Part 20, "Standards for Protection Against Radiation"

5. Title 40, Code of Federal Regulations, Part 190, "Environmental Radiation Protection Standards for Nuclear Power Operations"

6. Title 10, Code of Federal Regulations, Part 50, Appendix A, "General Design Criteria for Nuclear Power Plants"

7. Title 10, Code of Federal Regulations, Part 50, Appendix B, "Quality Assurance Criteria for Nuclear Power Plants and Fuel Reprocessing Plants"

8. "Radiological Effluent Technical Specifications for Boiling Water Reactors," Rev. 2
   NRC, July 1979
   NUREG-0473

9. "Preparation of Radiological Effluent Technical Specifications for Nuclear Power Plants, A Guidance Manual for Users of Standard Technical Specifications"
   NRC, October 1978
   NUREG-0133

10. C. Willis and F. Congel (NRC)
    "Summary of Draft Contractor Guidance of RETS"
    Presented at the AIF Environmental Subcommittee Meeting, Washington, DC
    May 19, 1982

11. F. Congel (NRC)
    Memo to RAB Staff (NRC)
    Subject: Interim Changes in the Model Radiological Effluent Technical Specifications (RETS)
    August 9, 1982

12. "Radiological Effluent Technical Specifications for Pressurized Water Reactors," Rev. 3, Draft 7', intended for contractor guidance in reviewing RETS proposals for operating reactors
NRC, September 1982
NUREG-0472

13. "An Evaluation to Demonstrate the Compliance of the Indian Point Reactors with the Design Objectives of 10CFR Part 50, Appendix I"
Consolidated Edison Company of New York and Power Authority of the State of New York
March 14, 1977

14. W. J. Cahill (Con Edison)
Letter of Transmittal to NRC
Subject: Proposed Radiological Effluent Technical Specifications for Indian Point Units 1 and 2
July 20, 1979

15. J. O'Toole (Con Edison)
Letter of Transmittal to NRC
Subject: Offsite Dose Calculation Manual for Indian Point Units 1 and 2
April 1, 1983

16. General Contents of the Offsite Dose Calculation Manual," Rev. 1
NRC, 1979

17. "Radiological Effluent Technical Specification Implementation, Comparison of Plant and Model RETS"
Franklin Research Center, Draft dated July 16, 1982

18. Trip Report to Indian Point Nuclear Power Plant Unit 2
Trip Date: September 29-30, 1982
S. Pandey (FRC) to F. Congel/C. Willis (NRC)
October 22, 1982

19. J. O'Toole (Con Edison)
Letter of Transmittal to NRC
Subject: Revised Radiological Effluent Technical Specifications for Indian Point Units 1 and 2
February 1, 1983

20. Final Indian Point Unit 2 RETS Submittal
Tranmitted to S. Pandey (FRC) from W. Meinke (NRC)
February 23, 1983

21. Informal Technical Communication
from C. Fernandez/S. Pandey (FRC) to W. Meinke (NRC)
"RETS Review Questions"
April 21, 1983

22. "Comparison of Specification NUREG-0472, Radiological Effluent Technical Specifications for PWRs, vs. Licensee Final Submittal of Radiological Effluent Technical Specifications, dated February 1, 1983, for Indian Point Nuclear Power Plant Unit 2"
Franklin Research Center
June 7, 1983

23. W. Meinke (NRC)
Memo to S. Pandey/C. Fernandez (FRC)
"Comments and Resolutions to Review Questions"
April 27, 1983

24. C. Willis (NRC)
Letter to S. Pandey (FRC)
Subject: Changes to RETS requirements following meeting with Atomic Industrial Forum (AIF)
November 20, 1981

25. C. Willis (NRC)
Letter to S. Pandey (FRC)
Subject: Control of explosive gas mixture in PWRs
December 18, 1981

26. C. Willis and F. Congel (NRC)
"Status of NRC Radiological Effluent Technical Specification Activities"
Presented at the AIF Conference on NEPA and Nuclear Regulations, Washington, D.C.
October 4-7, 1981

27. C. Willis (NRC)
Memo to P. C. Wagner (NRC)
"Plan for Implementation of RETS for Operating Reactors"
November 4, 1981

28. W. P. Gammill (NRC)
Memo to P. C. Wagner (NRC)
"Current Position on Radiological Effluent Technical Specifications (RETS) Including Explosive Gas Controls"
October 7, 1981

29. "An Acceptable Radiological Environmental Monitoring Program"
Radiological Assessment Branch Technical Position, Revision 1
November 1979

30. Methods for Demonstrating LWR Compliance with the EPA Uranium Fuel Cycle Standard (40CFR190)
NRC, February 1980
NUREG-0543

31. Calculation of Annual Doses to Man from Routine Releases of Reactor Effluents for the Purpose of Evaluating Compliance with 10CFR50, Appendix I
NRC, October 1977
Regulatory Guide 1.109, Revision 1

LICENSE AUTHORITY FILE COPY

DO NOT REMOVE

UNITED STATES
NUCLEAR REGULATORY COMMISSION
WASHINGTON, D. C. 20555

Transmitted with Correction letter of 6-20-84

SAFETY EVALUATION BY THE OFFICE OF NUCLEAR REACTOR REGULATION

RELATED TO AMENDMENT NO. 90 TO FACILITY OPERATING LICENSE NO. DPR-26

CONSOLIDATED EDISON COMPANY OF NEW YORK, INC.

INDIAN POINT NUCLEAR GENERATING UNIT NO. 2

DOCKET NO. 50-247

1.0 INTRODUCTION

To comply with Section V of Appendix I of 10 CFR Part 50, Consolidated Edison Company of New York has filed with the Commission plans and proposed technical specifications developed for the purpose of keeping releases of radioactive materials to unrestricted areas during normal operations, including anticipated operational occurrences, as low as is reasonably achievable. Consolidated Edison Company of New York filed this information with the Commission by letter dated February 1, 1983, which requested changes to the Technical Specifications appended to Facility Operating License No. DPR-26 for Indian Point Unit No. 2. The proposed technical specifications update those portions of the technical specifications addressing radioactive waste management and make them consistent with the current staff positions as expressed in NUREG-0472. These revised technical specifications would reasonably assure compliance, in radioactive waste management, with the provisions of 10 CFR Part 50.36a, as supplemented by Appendix I to 10 CFR Part 50, with 10 CFR Parts 20.105(c), 106(g), and 405(c); with 10 CFR Part 50, Appendix A, General Design Criteria 60, 63, and 64; and with 10 CFR Part 50, Appendix B.

2.0 BACKGROUND AND DISCUSSION

2.1 Regulations

10 CFR Part 50, "Domestic Licensing of Production and Utilization Facilities", Section 50.36a, "Technical Specifications on Effluents from Nuclear Power Reactors", provides that each license authorizing operation of a nuclear power reactor will include technical specifications that (1) require compliance with applicable provisions of Part 20.106, "Radioactivity in Effluents to Unrestricted Areas"; (2) require that operating procedures developed for the control of effluents be established and followed; (3) require that equipment installed in the radioactive waste system be maintained and used; and (4) require the periodic submission of reports to the NRC specifying the quantity of each of the principal radionuclides released to unrestricted areas in liquid and gaseous effluents, any quantities of radioactive materials released that are significantly above design objectives, and such other information as may be required by the Commission to estimate maximum potential radiation dose to the public resulting from the effluent releases.

10 CFR Part 20, "Standards for Protection Against Radiation," paragraphs 20.105(c), 20.106(g), and 20.405(c), require that nuclear power plant and other licensees comply with 40 CFR Part 190, "Environmental Radiation Protection Standards for Nuclear Power Operations" and submit reports to the NRC when the 40 CFR Part 190 limits have been or may be exceeded.

10 CFR Part 50, Appendix A - General Design Criteria for Nuclear Power Plants, contains Criterion 60, Control of releases for radioactive materials to the environment; Criterion 63, Monitoring fuel and waste storage; and Criterion 64, Monitoring radioactivity releases. Criterion 60 requires that the nuclear power unit design include means to control suitably the release of radioactive materials in gaseous and liquid effluents and to handle radioactive solid wastes produced during normal reactor operation, including anticipated operational occurrences. Criterion 63 requires that appropriate systems be provided in radioactive waste systems and associated handling areas to detect conditions that may result in excessive radiation levels and to initiate appropriate safety actions. Criterion 64 requires that means be provided for monitoring effluent discharge paths and the plant environs for radioactivity that may be released from normal operations, including anticipated operational occurrences and postulated accidents.

10 CFR Part 50, Appendix B, establishes quality assurance requirements for nuclear power plants.

10 CFR Part 50, Appendix I, Section IV, provides guides on technical specifications for limiting conditions for operation for light-water-cooled nuclear power reactors licensed under 10 CFR Part 50.

2.2 Standard Radiological Effluent Technical Specifications

NUREG-0472 provides radiological effluent technical specifications for pressurized water reactors which the staff finds to be an acceptable standard for licensing actions. Further clarification of these acceptable methods is provided in NUREG-0133, "Preparation of Radiological Effluent Technical Specifications for Nuclear Power Plants." NUREG-0133 describes methods found acceptable to the staff of the NRC for the calculation of certain key values required in the preparation of proposed radiological effluent technical specifications for light-water-cooled nuclear power plants. NUREG-0133 also provides guidance to licensees in preparing requests for changes to existing radiological effluent technical specifications for operating reactors. It also describes current staff positions on the methodology for estimating radiation exposure due to the release of radioactive materials in effluents and on the administrative control of radioactive waste treatment sytems.

The above NUREG documents address all of the radiological effluent technical specifications needed to assure compliance with the guidance and requirements provided by the regulations previously cited. However, alternative approaches to the preparation of radiological effluent technical specifications and alternative radiological effluent technical specifications may be acceptable if the staff determines that the alternatives are in compliance with the regulations and with the intent of the regulatory guidance.

The standard radiological effluent technical specifications can be grouped under the following categories:

(1) Instrumentation

(2) Radioactive effluents

(3) Radiological environmental monitoring

(4) Design features

(5) Administrative controls.

Each of the specifications under the first three categories is comprised of two parts: the limiting condition for operation and the surveillance requirements. The limiting condition for operation provides a statement of the limiting condition, the times when it is applicable, and the actions to be taken in the event that the limiting condition is not met.

In general, the specifications established to assure compliance with 10 CFR Part 20 standards provide, in the event the limiting conditions of operation are exceeded, that without delay conditions are restored to within the limiting conditions. Otherwise, the facility is required to effect approved shutdown procedures. In general, the specifications established to assure compliance with 10 CFR Part 50 provide, in the event the limiting conditions of operation are exceeded, that within specified times corrective actions are to be taken, alternative means of operation are to be employed, and certain reports are to be submitted to the NRC describing these conditions and actions.

The specifications concerning design features and administrative controls contain no limiting conditions of operation or surveillance requirements.

Table 1 indicates the standard radiological effluent technical specifications that are needed to assure compliance with the particular provisions of the regulations described in Section 1.0.

3.0 EVALUATION

The enclosed report (TER-C5506-095) was prepared for us by Franklin Reasearch Center (FRC) as part of our technical assistance contract program. Their report provides their technical evaluation of the compliance of the Licensee's submittal with NRC provided criteria. The staff has reviewed this TER and agrees with the evaluation.

3.1 SAFETY CONCLUSIONS

The proposed radiological effluent technical specifications for Indian Point Unit No. 2 have been reviewed, evaluated, and found to be in compliance with the requirements of the NRC regulations and with the intent of NUREG-0133 and NUREG-0472 (Indian Point Unit No. 2 is a pressurized water reactor) and thereby fulfill all the requirements of the regulations related to radiological effluent technical specifications.

Table 1. Rel[illegible] Between Provisions of the Regulations and the Standard Ra[illegible]ological Effluent Technical Specifications for Pressurized Water Reactors and Boiling Water Reactors

● Indicate the specifications that are needed to assure compliance with the identified provision of the regulations.

Provisions of Title 10 Code of Federal Regulations	Standard Radiological Effluent Technical Specifications																							
	Instrumentation		Radioactive Effluents																					
			Liquid				Gaseous																	
							PWR/BWR				PWR		BWR											
	Rad. Liquid Effl. Monitoring	Rad. Gas. Effl. Monitoring	Effluent Concentration	Dose	Liquid Radwaste Treatment	Liquid Holdup Tanks	Dose Rate	Dose Noble Gases	Dose I-131, Trit. and Part.	Explosive Gas Mixture	Gaseous Radwaste Treatment	Gas Storage Tanks	Gaseous Radwaste Treatment	Ventilation Exhaust Treatment	Main Condenser	Mark I or II Containment	Solid Radioactive Waste	Total Dose	Rad. Env. Monitoring Program	Land Use Census	Interlab. Comparison Program	Site Boundaries*	Review and Audits	Procedures	Reports	Record Retention	Process Control Program	Offsite Dose Calc. Manual	Major Changes to Rad. Systems
§ 50.36a Technical specifications on effluents from nuclear power reactors																													
Remain within limits of § 20.106			●			●	●					●				●												●	
Establish and follow procedures to control effluents			●	●	●	●	●	●	●	●	●	●	●	●	●	●	●							●				●	
Maintain and use radioactive waste system equipment				●	●			●	●		●		●	●														●	
Submit reports, semi-annual and other	●	●	●	●	●	●	●	●	●	●	●	●	●	●			●	●									●	●	●
§§ 20.105(c), 20.106(g), 20.405(c) Compliance with 40 CFR 190																		●	●	●	●							●	
Part 50 Appendix A - General Design Criteria																													
Criterion 60 - Control of releases of radioactive materials to the environment	●	●			●	●				●	●	●	●	●	●	●	●							●			●	●	
Criterion 61 - Fuel storage and handling and radioactivity control	●	●																											
Criterion 63 - Monitoring fuel and waste storage	●	●																											
Criterion 64 - Monitoring radioactivity releases	●	●													●				●									●	
Part 50 Appendix B - Quality Assurance Criteria	●	●																			●		●	●			●		
Part 50 Appendix I - Guides to Meet "As Low As Is Reasonably Achievable (ALARA)"																													
Maintain releases within design objectives				●	●			●	●		●			●															
Establish surveillance & monitoring program to provide data on:																												●	
(1) quantities of rad. matls. in effluents	●	●																											
(2) radiation & rad. matls. in the environment																			●						●	●			
(3) changes in use of unrestricted areas																				●									
Exert best efforts to keep releases "ALARA"				●	●			●	●		●		●	●															●
Submit report if calculated doses exceed the design objective				●				●	●		●			●											●				
Demonstrate conform. to des. obj. by calc. proced.				●				●	●		●			●														●	
Part 100															●														

*Note: Needed to fully implement other specifications.

The proposed changes will not remove or relax any existing requirement related to the probability or consequences of accidents previously considered and do not involve a significant hazards consideration.

The proposed changes will not remove or relax any existing requirement needed to provide reasonable assurance that the health and safety of the public will not be endangered by operation in the proposed manner.

4.0 ENVIRONMENTAL CONSIDERATION

We have determined that the issuance of the proposed amendment to the Technical Specifications appended to Facility Operating License No. DPR-26 for Indian Point Unit No. 2 would not authorize a significant change in the types, or a significant increase in the amounts, of effluents or in the authorized power level, and that the amendment will not result in any significant environmental impact. Having made these determinations, we have further concluded that the amendment involves an action which is insignificant from the standpoint of environmental impact and, pursuant to 10 CFR Part 50.5(d)(4), that an environmental impact statement, negative declaration, or environmental impact appraisal need not be prepared in connection with the issuance of this amendment.

5.0 GENERAL CONCLUSION

We have concluded, based on the considerations discussed above, that: (1) there is reasonable assurance that the health and safety of the public will not be endangered by operation in the proposed manner, and (2) such activities will be conducted in compliance with the Commission's regulations and the issuance of this amendment will not be inimical to the common defense and security or to the health and safety of the public.

Dated: June 6, 1984