November 28, 2000

MEMORANDUM TO: File

FROM: Thomas W. Alexion, Project Manager, Section 1
Project Directorate IV & Decommissioning /RA/
Division of Licensing Project Management

SUBJECT: ARKANSAS NUCLEAR ONE, UNIT 2 RE: DISCUSSIONS REGARDING REACTOR COOLANT SYSTEM (RCS) WELDS

The U.S. Nuclear Regulatory Commission (NRC) staff had discussions with the licensee on the above subject. In order to support the discussions, the licensee provided the attached discussion and figures.

The purpose of this memorandum is to place the attachment in the Public Document Room.

Docket No. 50-368

Attachment: As stated

DISTRIBUTION:
PUBLIC
PDIV-1 RF
RidsNrrPMTAlexion
RidsNrrLADJohnson

Accession No.:

OFFICE	PDIV-1/PM	PDIV-1/LA
NAME	TAlexion	DJohnson
DATE	11/16/00	11/27/00

DOCUMENT NAME: G:\PDIV-1\ANO2\MEMRCSWELDS.wpd
OFFICIAL RECORD COPY

UNITED STATES
NUCLEAR REGULATORY COMMISSION
WASHINGTON, D.C. 20555-0001

November 28, 2000

MEMORANDUM TO: File

FROM: Thomas W. Alexion, Project Manager, Section 1
Project Directorate IV & Decommissioning
Division of Licensing Project Management

SUBJECT: ARKANSAS NUCLEAR ONE, UNIT 2 RE: DISCUSSIONS REGARDING REACTOR COOLANT SYSTEM (RCS) WELDS

The U.S. Nuclear Regulatory Commission (NRC) staff had discussions with the licensee on the above subject. In order to support the discussions, the licensee provided the attached discussion and figures.

The purpose of this memorandum is to place the attachment in the Public Document Room.

Docket No. 50-368

Attachment: As stated

"FOR INFORMATION ONLY"

SUMMARY OF ANO-2 RCS HOT AND COLD LEG WELD FINDING AND REPAIR

Condition Discussion:

On October 17, 2000, during the cutting and machining process of the Steam Generator "B" Hot Legs and Cold Legs for SG replacement, it was noted that the thickness of the Carbon Steel piping at the cut locations was not as thick as was expected. A Bechtel construction sketch indicated that the Hot Leg Carbon Steel minimum thickness is to be 4.125 in. and the Cold Leg minimum carbon steel (CS) thickness is to be 3.00 in. Contrary to this, these areas measured a minimum CS thickness on either of the "B" loop Cold Legs is approximately 2.84 in. and the minimum CS thickness on the Hot Legs was approximately 4.06 in. This was representative of welds on the "A" loop piping. See attached sketches. In all cases on the hot and cold leg RCS piping, the combined thickness of Carbon Steel and Stainless steel (cladding) is greater than the specified minimums plus an allowance for corrosion resistant cladding thickness. These welds were field installed by Bechtel during construction of the unit. The spool pieces were fabricated and weld prepared by ABB-CE.

As shown on the attached drawings, a CS weld was to be applied in the throat of the carbon steel OD of the weld prep area. Per this design (ANSIB 16.25) a backing ring is inserted to support the ID side of RCS pipe to prevent the weld from burning through. The backing ring is then to be chipped out back filled with CS to the first or second land of the ID. A Stainless steel weld is then applied to the CS weld as a continuation of the cladding. Instead it appears that the backing ring was removed and the entire throat of the ID weld prep was filled with stainless weld material. It is currently unclear as to whether this was due to a change to the as built weld design as an acceptable alternative by Bechtel to the CE specification or if it was a failure to apply the specification per CE expectations. A root cause analysis is underway between Entergy, Bechtel and ABB-CE to determine the likely basis for the as built RCS welds.

The only similar welds that would exist which could be representative of this condition would be the counterpart hot and cold leg welds at the reactor vessel. Other welds on the RCS were either performed at CE in the shop are stainless to stainless welds, or interface with stainless steel safe ends.

"FOR INFORMATION ONLY"

Preliminary Conclusion of RCS Welds:

No credit has been taken in previous calculations for the load carrying capability of the stainless steel weld. ANO intends to maintain conservative assumptions that will continue to take no credit for load carrying capability of the SS material. ABB-CE has performed analyses showing that the as found carbon steel welds will be able to carry required loads with margin per ASME Code. ANO has received and is reviewing the ABB-CE analyses for ASME Code compliance of the existing RCS Hot and Cold Leg welds that are assumed at the reactor vessel.

Replacement of Weld at SG nozzle to Hot/Cold Leg Pipe:

In preparation for the replacement welds, the existing in-situ weld from the OD of the pipe to nozzle weld was tapered at a steeper angle than the original field weld preparation (i.e. original CS weld material remains on the pipe). A weld crown was installed on the OD of the weld that extended from the weld onto the hot (or cold) leg piping. This crown width provides additional margin for minimum wall thickness.

The ID of the hot/cold leg pipe was prepared with a back groove and was backfilled with CS weld material at the weld landing on the pipe end. The new ID weld preparation only included one landing. A minimum of 1/8 inch clearance was left between the CS weld and the interface to the stainless cladding. The CS weld was then cleaned, NDE examined and a stainless steel filler weld was welded to the ID of the pipe for cladding.

Subject: Welding of ANO-2 Stainless Steel Clad onto Carbon Steel Base Metal

We discussed the concern on whether we would need to consider buttering the carbon to stainless weld interface with our metallurgist. The following information provides our consideration as to why the weld process in the Bechtel weld procedure is appropriate.

The Bechtel welding procedure for stainless steel cladding that was used to clad the ID surface of ANO 2 RCS welds was qualified in accordance with ASME B&PV Code Section IX . This procedure, P1-Clad-1, was qualified by PQR (procedure qualification record) 185. The first layer of stainless steel clad was SFA-5.4 Type E309, which has a maximum carbon content of 0.15%. The second layer and all succeeding layers of stainless clad metal was deposited with SFA- 5.4 E308L weld metal which has a maximum carbon content of 0.04%. The first layer of stainless steel, in essence, provides a buttering interface to the ferritic steel. This procedure is widely used by Bechtel and others for nuclear plant construction.

The low carbon content of the first layer of cladding is much less than the nominal carbon content of the base metal. The SA 516 Grade 70 pipe has a maximum carbon content of 0.31%, and the SA-508 Gr. 2 nozzles have a maximum carbon content of 0.27%. The actual carbon contents of these ferritic steel are normally very close to the maximum allowable in order to meet tensile strength requirements. Thus, when E309 stainless weld metal is deposited onto the ferritic steel, there is no carburization (carbon intrusion) of these materials. Therefore, this weld process does not affect the toughness properties or other adverse property changes in the ferritic steels due to cladding overlay.

Draft

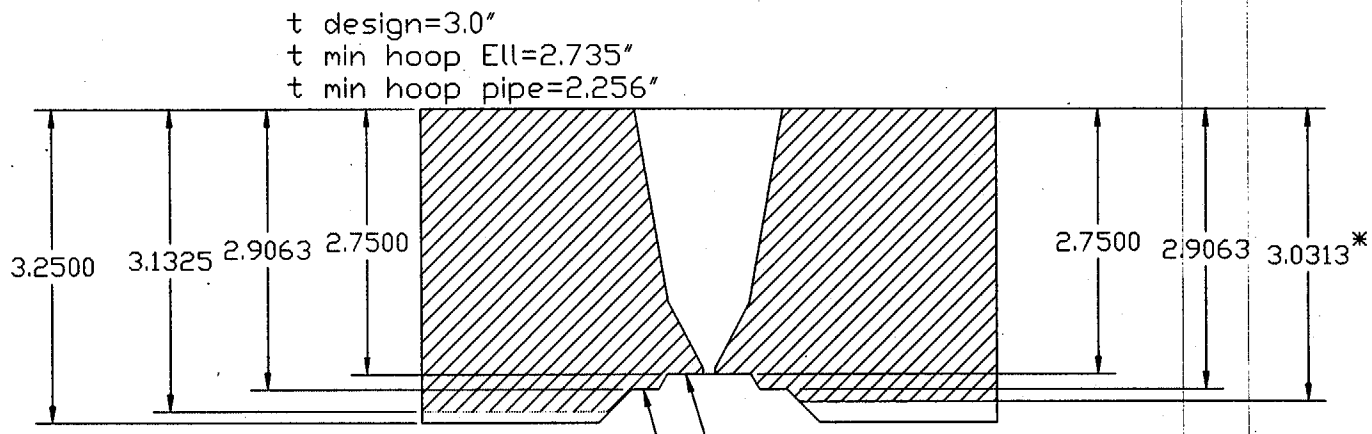

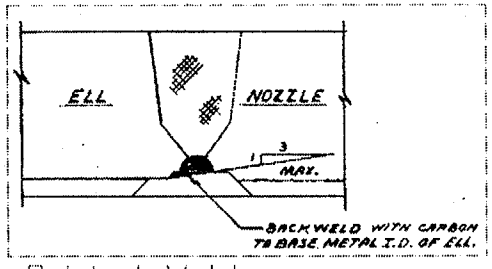

Original Weld
Detail per drawing

* t = 0.9*3.0313 = 2.72

Cold Leg Elbow

Generator Nozzle

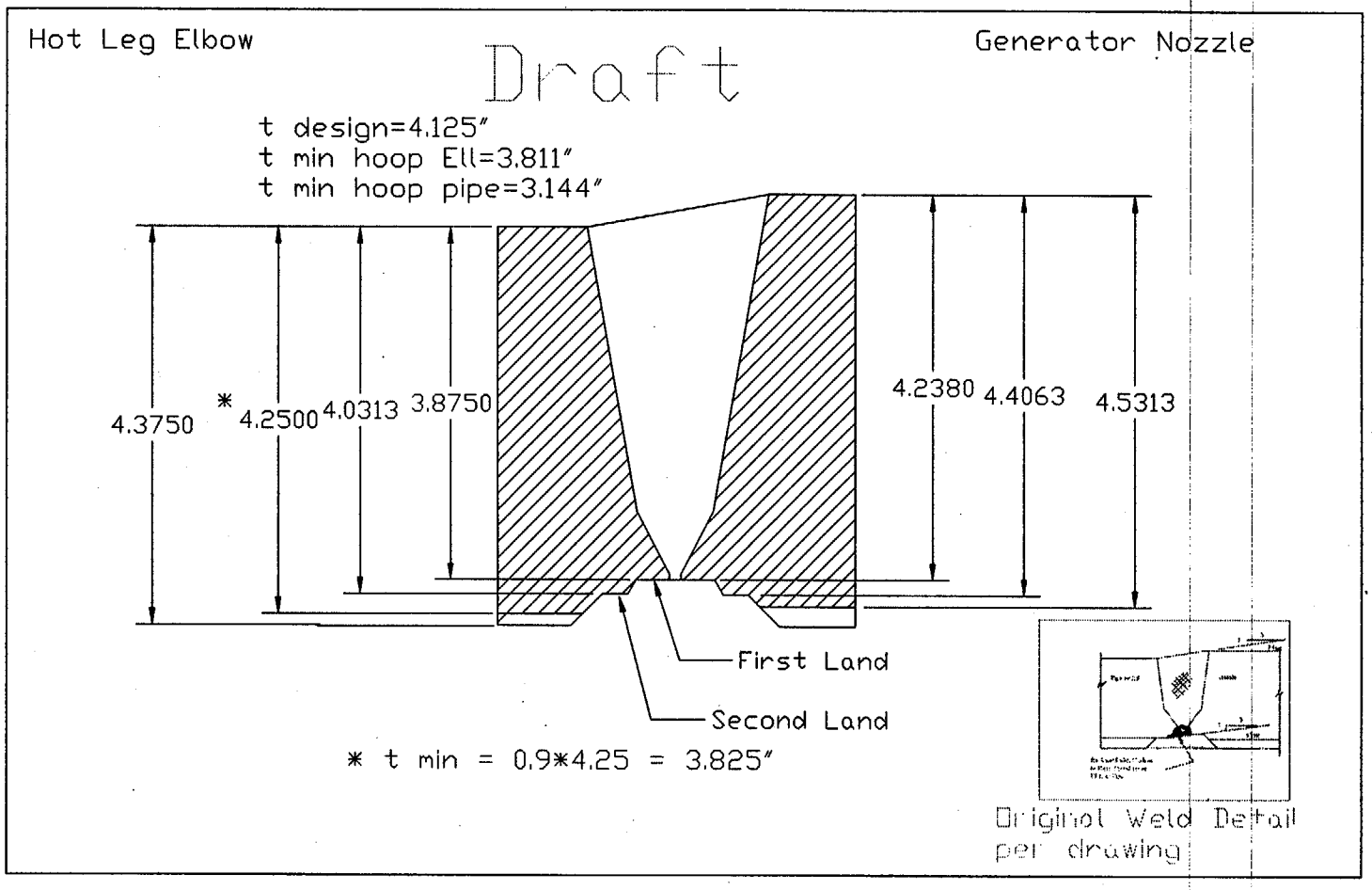
Hot Leg Elbow
Draft
Generator Nozzle
t design=4.125"
t min hoop Ell=3.811"
t min hoop pipe=3.144"
4.3750
* 4.2500
4.0313
3.8750
4.2380
4.4063
4.5313
First Land
Second Land
* t min = 0.9*4.25 = 3.825"
Original Weld Detail
per drawing