RAS 2418

DOCKETED
USNRC

'00 NOV 24 P4:05

UNITED STATES OF AMERICA
NUCLEAR REGULATORY COMMISSION
BEFORE THE ATOMIC SAFETY AND LICENSING BOARD

In the Matter of	)	
	)	
CAROLINA POWER & LIGHT	)	Docket No. 50-400 -LA
(Shearon Harris Nuclear	)	ASLBP No. 99-762-02-LA
Power Plant)	)	
	)	

DETAILED SUMMARY OF FACTS, DATA AND ARGUMENTS AND SWORN SUBMISSION ON WHICH ORANGE COUNTY INTENDS TO RELY AT ORAL ARGUMENT TO DEMONSTRATE THE EXISTENCE OF A GENUINE AND SUBSTANTIAL DISPUTE OF FACT WITH THE LICENSEE REGARDING THE PROPOSED EXPANSION OF SPENT FUEL STORAGE CAPACITY AT THE HARRIS NUCLEAR POWER PLANT

WITH RESPECT TO THE NEED TO PREPARE AN ENVIRONMENTAL IMPACT STATEMENT TO ADDRESS THE INCREASED RISK OF A SPENT FUEL POOL ACCIDENT (CONTENTION EC-6)

Submitted on behalf of Orange County by:

Diane Curran, Esq.
Harmon, Curran, Spielberg & Eisenberg
1726 M Street N.W., Suite 6000
Washington, D.C. 20036
202/328-3500

Counsel for Orange County

Dr. Gordon Thompson, President
Institute for Resource and Security Studies
27 Ellsworth Avenue
Cambridge, Massachusetts 02139

Expert Witness for Orange County

Template = SECY-021

SECY-02

November 20, 2000

UNITED STATES OF AMERICA
NUCLEAR REGULATORY COMMISSION
BEFORE THE ATOMIC SAFETY AND LICENSING BOARD

In the Matter of CAROLINA POWER & LIGHT (Shearon Harris Nuclear Power Plant)	))))))	Docket No. 50-400 -LA ASLBP No. 99-762-02-LA

DETAILED SUMMARY OF FACTS, DATA AND ARGUMENTS AND SWORN SUBMISSION ON WHICH ORANGE COUNTY INTENDS TO RELY AT ORAL ARGUMENT TO DEMONSTRATE THE EXISTENCE OF A GENUINE AND SUBSTANTIAL DISPUTE OF FACT WITH THE LICENSEE REGARDING THE PROPOSED EXPANSION OF SPENT FUEL STORAGE CAPACITY AT THE HARRIS NUCLEAR POWER PLANT

WITH RESPECT TO THE NEED TO PREPARE AN ENVIRONMENTAL IMPACT STATEMENT TO ADDRESS THE INCREASED RISK OF A SPENT FUEL POOL ACCIDENT (CONTENTION EC-6)

I. INTRODUCTION

Pursuant to 10 C.F.R. § 2.113, Orange County hereby submits a detailed written summary and sworn submission (hereinafter "Summary") of all the facts, data, and arguments which are known to the County and on which the County proposes to rely at the January 7, 2001, oral argument regarding Contention EC-6. This Summary presents Orange County's legal and factual grounds for demonstrating the existence of a genuine and material factual dispute regarding the issues raised in Contention EC-6. As demonstrated below, the NRC Staff should be prohibited from issuing an operating license amendment to Carolina Power & Light ("CP&L") for the purpose of expanding

spent fuel storage capacity at the Harris nuclear power plant, unless and until it has prepared a full-scale Environmental Impact Statement ("EIS") that addresses the environmental impacts of the proposal and weighs reasonable alternatives.

As required by 10 C.F.R. § 2.111(b), the factual assertions in this Summary are submitted under the sworn declaration of Dr. Gordon Thompson, the County's expert witness regarding to Contention EC-6. *See* Declaration of Dr. Thompson, attached as Exhibit 2. Dr Thompson's professional qualifications and experience are described in his Declaration and his Curriculum Vitae, which is an attachment to his Declaration. In addition, the technical analysis supporting Orange County's summary is contained in Dr. Thompson's report entitled *The Potential for a Large Atmospheric Release of Radioactive Material From Spent Fuel Pools at the Haris Nuclear Power Plant: the Case of a Pool Release Initiated by a Severe Reactor Accident* (Novenber 20, 2000) ("Thompson Report"), a copy of which is attached as Exhibit 2.

As detailed below, this summary demonstrates the existence of substantial and material evidence that the probability of an exothermic reaction in the spent fuel pools, leading to a massive release of radiation from the pools, is foreseeable, and may not be disregarded as a remote and speculative event.

II. STATEMENT OF THE CASE

This case raises the question of whether a severe pool accident in pools C and D of the Harris reactor is a foreseeable and plausible event, such that an Environmental Impact Statement ("EIS") must be prepared to fully evaluate the adverse impacts and weigh the costs and benefits of reasonable alternatives. The NRC Staff has prepared an

Environmental Assessment ("EA"), which claims that no EIS is necessary because the likelihood of such an accident is remote and speculative.

As demonstrated in this Summary and the attached report by Dr. Gordon Thompson, the EA is completely inadequate to justify the Staff's refusal to prepare an EIS, because it fails to take into account new information demonstrating that a spent fuel pool accident at Harris is not a remote and speculative event. Using data provided by CP&L and the NRC Staff, Dr. Thompson has provided a best estimate of the overall probability of a spent fuel pool accident which shows that such an accident is foreseeable and should be evaluated in an EIS.

The NRC Staff and CP&L will also be presenting estimates regarding the likelihood of a spent fuel pool accident at Harris. In evaluating this information, the Board must take into account the high level of uncertainty involved in the use of PRA, as well as the fact that any PRA on the seven-part scenario set forth in LBP-00-19 would take the art of risk assessment into uncharted territory that is therefore all the more uncertain. Moreover, the amount of time provided in this proceeding for such an analysis is far too short to permit the kind of "state-of-the-art" analysis contemplated by the Commission for the use of PRA in regulatory decisions. Under the circumstances, it is appropriate to require the preparation of a full-scale EIS.

The Board should also closely examine the qualitative assumptions made by the NRC Staff in support any assertion that the likelihood of a severe accident is too low to warrant the preparation of an EIS. In particular, the Board should not approve an EA that assumes that Harris workers will incur doses above regulatory limits in order to stop a severe accident from progressing, or that regulatory requirements for the safe operation of

the Harris plant would be violated. To do so would unlawfully permit the trade-off of one kind of environmental harm to justify another, without taking the "hard look" required by NEPA.

Finally, the procedural posture of this case warrants the conduct of an adjudicatory hearing in order to allow a meaningful ventilation of the complex factual issues at stake here. Because of the extremely short timeframe for discovery in this expedited proceeding, none of the parties had completed their analyses before the conclusion of discovery. Therefore, Orange County has not had an opportunity to question NRC or CP&L experts or other witnesses about the results of their analyses or how they were arrived at. A summary proceeding such as this one cannot be fairly or lawfully used to cut off an intervenor's ability to probe the basis for the opposing parties' views.

III. FACTUAL AND PROCEDURAL BACKGROUND

A. Requirements of NEPA for Environmental Studies

NEPA requires federal agencies to prepare an EIS before undertaking any major federal action which may significantly affect the quality of the human environment. 42 U.S.C. § 4332(C). The NRC's implementing regulations at 10 C.F.R. § 51.20(a) also require the NRC to prepare an EIS for any licensing or regulatory action which "is a major federal action significantly affecting the quality of the human environment." Where aspects of the proposed action are addressed by a previously prepared EIS, a new EIS must be issued if there remains "major federal action" to occur, and if there is new information showing that the remaining action will affect the quality of the human environment "in a significant manner or to a significant extent not already considered."

Marsh v. Oregon Natural Resources Council, 490 U.S. 360, 374 (1989); *See San Luis Obispo Mothers for Peace v. NRC*, 751 F.2d 1287, 1298 (D.C. Cir. 1984).[1]

B. The Harris License Amendment Proceeding

1. Nature of Proposed License Amendment

There are four spent fuel storage pools at the Harris nuclear power plant. Only two of the pools, designated "A" and "B," are currently in operation. At present, pool A contains 6 PWR racks with a total of 360 spaces, and 3 BWR racks with a total of 363 spaces. Pool B contains 12 PWR racks with a total of 768 spaces and 17 BWR racks with a total of 2,057 spaces. Under the present license, one additional BWR rack with a total of 121 spaces could be placed in pool B.

CP&L now seeks a license amendment to activate pools "C" and "D."[2] The purpose of the license amendment is to allow CP&L to use the Harris facility to store spent fuel generated at CP&L's one-unit Harris PWR station, its two-unit Brunswick BWR station, and its one-unit Robinson PWR station. If granted, the license amendment would allow the placement in pool C of up to 11 PWR racks with a total of 927 spaces and 19 BWR racks with a total of 2,763 spaces; and the placement in pool D of 12 PWR

---

[1] *See also* 10 C.F.R. § 51.92(a), which requires supplementation where the proposed action has not been completed, if: "(1) there are substantial changes in the proposed action that are relevant to environmental concerns; or (2) There are significant new circumstances or information relevant to environmental concerns and bearing on the proposed action or its impacts." Although § 51.92 technically does not apply here, where the action proposed in the original Shearon Harris EIS has already been taken, the criteria provide applicable guidance for these circumstances.

[2] CP&L's proposed changes to its Technical Specifications are described in Enclosure 5 to the License Amendment Application.

racks with a total of 1,025 spaces. CP&L envisions this placement occurring in three campaigns in pool C, followed by two campaigns in pool D.[3]

If approved, the proposed license amendment would bring the total inventory of spent fuel assemblies that could be stored at Harris to 8,384, over a thousand more spent fuel assemblies than assumed in the 1983 Final Environmental Statement ("FES") that was prepared in connection with the Harris operating license application.[4]

The proposed license would make significant changes to the quantity of fuel now stored at Harris, as well as the method for storing the fuel. Both changes have significance with respect to the environmental impacts of the proposed license amendment. Pools C and D would have a capacity of 4,715 fuel assemblies as compared with the capacity of 3,669 fuel assemblies in pools A and B. This would result in a significant increase in the quantity of long-lived radioactive isotopes (*e.g.*, cesium-137) that could be stored at the Harris plant. An accident at pools C and D could release to the atmosphere a substantial fraction of the inventory of cesium-137 and other radioactive isotopes in these pools. *See* Thompson, Risks and Alternative Options Associated with Spent Fuel Storage at the Shearon Harris Nuclear Power Plant, Appendices D and E

---

[3] Pool D will not be filled until a later "campaign," by which time CP&L will also need to have obtained a license amendment permitting it to exceed the license's current 1.0 million BTU/hour limit on the heat load in pools C and D. At that point, however, no further licensing action will be needed on the number of spent fuel assemblies permitted to be stored in pool D. The number of spent fuel assemblies permitted to be stored at the Harris site will have been previously approved in this license amendment proceeding.
[4] CP&L License Amendment Application, Enclosure 1 at 3 (December 23, 1998); NUREG-0972, Final Environmental Statement Related to the Operation of Shearon Harris Nuclear Power Plant Units 1 and 2, Docket Nos. STN 50-400 and 50-401, Carolina Power and Light Company (October 1983). It is important to note in this regard that although the FEIS assumed the storage of spent fuel at the Harris site, it did not address the environmental impacts of spent fuel storage.

(January 31, 2000) ("Thompson 1999 Report").[5] Such a release would yield consequences that would be significant in their own right, and would also be significant in comparison to the consequences of accidents at pools A and B and/or the Harris reactor.

In addition, the center-to-center distance for PWR fuel in pools C and D would be 9.0 inches instead of the 10.5 inches in pools A and B. Other factors being equal, this reduced distance would increase the propensity of pools C and D, as compared with pools A and B, to experience an exothermic reaction of fuel cladding in the event of partial or total loss of water. Given a loss of water, the conditional probability of an exothermic reaction in pools C and D would be comparable to or greater than the conditional probability of a similar reaction in pools A and B, and would be substantial over a range of pool loading patterns.[6]

2. Environmental Assessment

On December 15, 1999, the NRC Staff issued an Environmental Assessment ("EA") and Finding of No Significant Impact ("FONSI") for the CP&L license amendment application. Environmental Assessment and Finding of No Significant Impact Related to Expanding the Spent Fuel Pool Stage Capacity at the Shearon Harris Nuclear Power Plant (TAC No. MA4432) at 10. In the EA, the NRC Staff concluded that the proposed expansion of spent fuel storage capacity at the Shearon Harris nuclear power plant will not have a significant effect on the quality of the human environment:

---

[5] A copy of Dr. Thompson's 1999 Report was attached as Exhibit 2 to Orange County's Request for Admission of Late-Filed Environmental Contentions (January 31, 2000).
[6] The "conditional" probability of an accident is the probability of the accident if the occurrence of an event that could cause the accident (in this case, a loss of water) is

> The proposed action will not significantly increase the probability or consequences of accidents, no changes are being made in the types of any effluents that may be released offsite, and there is no significant increase in occupational or public radiation exposure.

Id. at 6.

3. Orange County's intervention

On January 31, 2000, Orange County submitted a set of environmental contentions which challenged the FONSI issued in the EA. Contention EC-6 (formerly designated as Contention 1) charged that the NRC should be required to prepare an EIS for the proposed license amendment, because the proposed expansion of spent fuel pool storage capacity at Harris would significantly increase the risk of an accident at Harris. The contention identified two respects in which the risk of an accident was significantly increased: (a) CP&L would make significant changes in the physical characteristics and mode of operation of the plant that are not addressed in the EA, and (b) new information shows that spent fuel pool accident risks are higher than previously believed.

The Licensing Board admitted Contention EC-6, ruling that Orange County had posited a potential accident scenario that provided "an adequate basis to allow merits litigation on whether the sequence is not 'remote and speculative' so that a further environmental analysis of the CP&L pool expansion amendment request is required." LBP-00-19, slip op. at 13; *see also* slip op. at 16. The Board also posed three questions to the parties regarding their best estimates for the accident scenario, the effects of recent developments in probability estimation on the probabilities of the events in the scenario, and the necessary scope of the EIS should one be required. *Id.*, slip op. at 17.

---

assumed.

Noting that the Applicant had previously invoked the procedures of Subpart K to 10 C.F.R. Part 2, the Board applied the procedures of Subpart K to establish an expedited schedule that included 60 days for discovery, and required the submission of legal and evidentiary summaries under 10 C.F.R. § 2.1113 within 90 days after the admission of the contention. An oral argument was set for December 7, 2000.

During the discovery period, the parties exchanged written interrogatories and document requests. Each party also took depositions of the other parties' witnesses.[7] In addition, Orange County's attorney and expert witness toured the Harris plant. The discovery process provided an opportunity for Orange County to obtain relevant documents, become familiar with the details of the Harris design and operation, and procure background information on the work that the Staff and CP&L were doing in preparation for filing their evidentiary summaries on November 20. However, none of the parties was able to complete its technical analysis by the close of discovery, and thus Orange County was unable to question either the Staff or CP&L about the results of their analyses or how those results were arrived at.

C. Use of Probabilistic Risk Assessment

1. Nature and history of PRA

The phrase "PRA techniques" refers to a wide variety of analytic models and procedures which draw upon data from experiments and from practical experience with nuclear facilities. PRA is used to quantify nuclear power plant hazards, using complex

[7] Under a July 20, 1999, Order, the parties were limited to deposing only three of the individuals identified by each of the other parties as potential affiants. Orange County deposed three out of the eight potential affiants identified by CP&L, and three out of four Staff affiants.

mathematical and phenomenological models. The methodology has been in development for almost three decades. Thompson Report at 13.

The "state of the art" in PRA is represented by NUREG-1150, Severe Accident Risks: An Assessment for Five U.S. Nuclear Reactors (1990). NUREG-1150 is a Level 1 PRA which evaluates core melt and containment release frequencies for five reactors. It took ten years to produce, and cost many millions of dollars. NUREG-1150 is exemplary of the state-of-the-art in PRA, because of the depth and detail to which it examines the phenomenology of core melt accidents, because it contains uncertainty analysis, and because it was peer reviewed by a broad array of scientists. PRA techniques provide the best available methodology for estimating the overall probability of the seven-part event sequence that has been identified by the ASLB. Work on PRA development has continued since that study was completed, but subsequent PRAs have been less ambitious in their scope. *See* Thompson Report at 13.

In LBP-00-19, the Licensing Board noted the NRC's increasing reliance on PRA for regulatory decisions over the past ten years, and that the "entire trend in licensing, enforcement, inspection and the granting of amendments has swung gradually toward decision-making by probabilistic risk assessment." *Id.*, slip op. at 15. The Commission has also published a policy statement encouraging the increased use of PRA in regulatory activities. Policy Statement, Use of Probabilistic Risk Assessment Methods in Nuclear Regulatory Activities, 60 Fed. Reg. 42,622 (August 16, 1995). Nevertheless, the Commission's policy limits the use of PRA to the "extent supported by the state-of-the-art." *Id.* In fundamental respects, the state of the art of PRA has not changed since the

publication of NUREG-1150 ten years ago.

The limitations on the state of the art of PRA are discussed and summarized in Dr. Thompson's report at Section 2.3. As Dr. Thompson points out, PRAs for nuclear reactors continue to be characterized by substantial uncertainties. Moreover, PRA does not attempt to model some effects, such as acts of malice, sabotage, and degraded standards of operation. This is not because these factors make no contribution to the hazards of nuclear facility operation, but because the NRC does not know how to model them. In addition, PRAs rely heavily on expert opinion for numerous assumptions that cannot be verified. Finally, while a substantial body of knowledge has been accumulated with respect to Level 1 PRA, the results become increasingly less reliable with additional levels of analysis. For subject areas like spent fuel pool accident probability, the NRC has not accumulated anything near the level of study and understanding that it has for the phenomenology of core melt accidents. *See* Thompson Report at 13-16. These limitations on the state-of-the-art of PRA impose substantial restrictions on the degree to which the quantitative results of PRAs can be relied on for regulatory decisions, especially decisions that relax or waive safety and environmental requirements.

D. NEPA Analyses Relevant to Harris Spent Fuel Pool Expansion

1. Generic NEPA studies

Since the early 1980's, the EIS's for the licensing of all U.S. nuclear plants have considered the potential for severe accidents, without including a discussion of the potential for severe spent fuel pool accidents. This omission has been based on the findings of the Reactor Safety Study (WASH-1400).

In 1979, the NRC prepared a generic EIS on the environmental impacts of spent

fuel storage, which includes a discussion of spent fuel pool accidents. *See* NUREG-0575, Handling and Storage of Spent Light Water Power Reactor Fuel (1979). In Sections 4.2.2 and 4.2.3, the GEIS addressed potential accidents, and concluded that: "The underwater storage of aged spent fuels is an operation involving an extremely low risk of a catastrophic release of radioactivity." *Id.* at 4-13. The GEIS, however, contained an extremely cursory analysis. Moreover, it contained no discussion at all of the potential for exothermic reactions under partial drain-down conditions. Since the publication of NUREG-0575 over twenty years ago, the NRC has prepared no other generic EIS which specifically examines the risks of spent fuel pool storage.

In a 1989 report, the NRC Staff summarized the Reactor Safety Study's consideration of spent fuel pool accidents, and the need for further analysis, as follows:

> "The risk of beyond design basis accidents in spent fuel storage pools was examined in WASH-1400. It was concluded that these risks were orders of magnitude below those involving the reactor core because of the simplicity of the spent fuel storage pool design: (1) the coolant is at atmospheric pressure, (2) the spent fuel is always subcritical and the heat source is low, (3) there is no piping which can drain the pool and (4) there are no anticipated operational transients that could interrupt cooling or cause criticality.
>
> The reasons for the re-examination of spent fuel storage pool accidents are twofold. First, spent fuel is being stored instead of reprocessed. This has led to the expansion of onsite fuel storage by means of high density storage racks, which results in a larger inventory of fission products in the pool, a greater heat load on the pool cooling system, and less distance between adjacent fuel assemblies. Second, some laboratory studies have provided evidence of the possibility of fire propagation between assemblies in an air cooled environment. Together, these two reasons provide the basis for an accident scenario which was not previously considered."[8]

Despite this recognition that pool accidents represent a new, credible accident scenario,

---

[8] E.D.Throm, NUREG-1353, Regulatory Analysis for the Resolution of Generic Issue 82, "Beyond Design Basis Accidents in Spent Fuel Pools" at ES-1 (April 1989).

the NRC Staff has never undertaken any further NEPA analysis of the risks of spent fuel pool storage, nor have any of its other non-NEPA studies contained the level of analysis that has been given to reactor accidents through WASH-1400, NUREG-1150, EIS's, and IPE's.

2. FEIS for Harris operating license

In 1983, the NRC Staff prepared an EIS in connection with the proposed issuance of an operating license for the Harris nuclear power plant, Units 1 and 2.[9] The EIS examined reactor accidents only, and did not evaluate spent fuel pool accidents.

E. CP&L studies on spent fuel pool accidents

CP&L's evaluation of reactor accidents appears in CP&L's Individual Plant Examination (IPE) submittal of August 1993, and its Individual Plant Examination for External Events submittal of June 1995. Like the EIS, CP&L's IPE's did not evaluate spent fuel pool accidents. Since the publication of the IPE and IPEEE, CP&L has continued to update its risk analyses for Harris in a Probabilistic Safety Analysis ("PSA"). The PSA provides an estimate of the annual probability of core degradation for so-called "internal" initiating events, including floods, and for selected "external" initiating events, namely earthquakes and in-plant fires. In addition, the PSA estimates the annual probability and other characteristics of releases of radioactive material to the atmosphere, pursuant to core degradation.

---

[9] NUREG-0972, Final Environmental Statement Related to the Operation of Shearon Harris Nuclear Power Plant Units 1 and 2, Docket Nos. STN 50-400 and 50-401,

ARGUMENT

IV. APPLICABLE STANDARDS AND WITNESS QUALIFICATIONS

A. Procedural Standards Under NRC Rules of Practice

The standard of review for this Subpart K proceeding is described in LBP-00-12, the Licensing Board's merits decision in the Subpart K proceeding for the technical phase of this proceeding. *Carolina Power & Light Co.* (Shearon Harris Nuclear Power Plant), LBP-00-12, 51 NRC 247 (2000). Pursuant to 10 C.F.R. §§ 2.1113 and 2.1115, this proceeding provides the parties with:

> an opportunity to present facts data and arguments, by way of written summaries and sworn testimony, and an oral argument. Based on the summaries and the argument, the Commission then is to designate 'any disputed questions of fact, together with any remaining questions of law, for resolution in an adjudicatory hearing' if the Commission finds that 'there is a genuine and substantial dispute of fact which can only be resolved with sufficient accuracy by the introduction of evidence and an adjudicatory hearing,' and 'the decision of the Commission is likely to depend in whole or in part on the resolution of such dispute.'

Id., 51 NRC at 254.

The burden of demonstrating the existence of material factual disputes that must be aired in an evidentiary hearing falls on Orange County as the petitioner in this case. *See* LBP-00-12, 51 NRC at 255; Memorandum and Order (Subpart K Oral Argument Procedures) at 2 (January 13, 2000). Thus, Orange County must submit adequate evidence to show that a substantial and material dispute of fact exists between the County and CP&L and the NRC Staff regarding the need for an EIS to address the environmental impacts of spent fuel pool expansion at Harris.[10] However, the Staff and CP&L carry the

---

Carolina Power and Light Company (October 1983).

[10] Orange County notes that without being able to review the legal and evidentiary summaries by the other parties, it is not possible, in this filing, to identify in

"ultimate burden" of sustaining their position that an EIS is unnecessary. *See* LBP-00-12 at 254 (as license applicant, CP&L bears "ultimate burden of proof" on the merits); *Louisiana Energy Services* (Claiborne Enrichment Center), LBP-96-25, 44 NRC 331, 338 (1996) (Staff has burden of proof in defending its own environmental studies).

B. Orange County Has Presented Evidence by a Qualified Expert

Orange County's Summary is supported by a detailed report prepared by Dr. Gordon Thompson. *See* Exhibit 2. Dr. Thompson is a highly qualified expert with respect to the technical issues in dispute in this phase of the Harris license amendment proceeding, which relate to probabilistic risk assessment, nuclear power plant design and operation, and spent fuel storage characteristics. He is qualified by "knowledge, skill, experience, training, or education" to render an expert opinion on the adequacy of probabilistic risk assessments and deterministic studies of nuclear power plant phenomena for purposes of addressing their adequacy to justify the Staff's refusal to prepare an EIS for the proposed Harris license amendment; and his expert opinion will "assist the trier of fact to understand the evidence" and to determine the facts in issue. *See* Federal Rule of Evidence 702, which was held applicable to NRC proceedings in *Duke Power Co.* (William B. McGuire Nuclear Station, Units 1 and 2), ALAB-669, 15

---

detail the substantial and material facts that are in dispute, beyond contesting the conclusions of the EA. The most Orange County can do here is to identify all the facts, data, and arguments on which it intends to rely at the oral argument for the purpose of establishing any such dispute. Technical facts, data and arguments are set forth in detail in the Thompson Report. Legal arguments are applied to the facts in this summary.

NRC 453, 475 (1972).

Dr. Thompson's qualifications to testify regarding technical issues relating to nuclear power plant operation and design were at issue in the first phase of this proceeding. In LBP-00-12, the Licensing Board admitted Dr. Thompson's testimony on criticality prevention issues, but apparently decided to give it less weight than testimony by opposing parties, on the ground that "by reason of experience and training, his Thompson's] expertise relative to reactor technical issues seems largely policy-oriented rather than operational." *Id.*, 51 NRC at 267 note 9. It is appropriate to re-visit the question of Dr. Thompson's qualifications here, for two reasons. First, in focusing on Dr. Thompson's work on policy related issues, the Board overlooked his considerable knowledge of nuclear power plant design and operation. Second, the contention at issue involves new technical subjects that were not at play in the first phase of this license amendment proceeding: probabilistic risk assessment, and the phenomenology of spent fuel storage. Dr. Thompson is intimately familiar with both of these subjects, and has worked on them for many years. It is also important to note that some of Dr. Thompson's views on the severe accident risks of spent fuel storage, which were denounced as unsupported by the NRC Staff at the outset of this proceeding, have since been confirmed by the Staff.

Dr. Thompson is highly qualified, by training, knowledge, and experience, to testify in the proceeding. He has a Ph.D. in applied mathematics from Oxford University, and Bachelors' degrees in mechanical engineering and mathematics and physics from the University of New South Wales. His undergraduate and graduate work provided him with a rigorous education in scientific and mathematical methodologies and disciplines.

Dr. Thompson has also accumulated more than twenty years of professional experience, much of it in the study of nuclear facilities and their risks. As demonstrated in his attached Declaration and as detailed in his resume, this knowledge and experience go far beyond policy-oriented work. In the course of his career, Dr. Thompson has evaluated design and accident risk considerations associated with a significant array of nuclear power plants and other nuclear facilities in the U.S. and elsewhere around the world.[11] His work has included the study of high-density spent fuel storage and high-level nuclear waste management.

In addition, Dr. Thompson has spent over a year becoming closely familiar with the design and operation of the Harris nuclear power plant. His February 1999 report, Risks and Alternative Options Associated with Spent Fuel Storage at the Shearon Harris Nuclear Power Plant, reflected a reasonable degree of familiarity with the design of the Harris facility and with the accident risks posed by additional high-density spent fuel storage there.[12] His report for this Subpart K proceeding, The Potential for A Large Atmospheric Release of Radioactive Material from Spent Fuel Pools at the Harris Nuclear Power Plant (November 20, 2000) (Exhibit 2 to this Summary), demonstrates

---

[11] *See* Curriculum Vitae: Gordon R. Thompson, Attachment 1 to Exhibit 1, Thompson Declaration. In making various plant-specific and generic evaluations of risks posed by nuclear facilities, Dr. Thompson has generally familiarized himself with the design of these facilities, and has also closely studied the design of specific facilities. *See* Thompson Declaration, pars. 6-8.

[12] Although CP&L claimed to identify "flaws" in this report, *see* Applicant's Response to BCOC's Late-Filed Environmental Contentions (March 3, 2000), these arguments reflect the Applicant's attempt to misconstrue and muddle the content of Dr. Thompson's report, not a lack of knowledge by Dr. Thompson. *See* Orange County's Reply to Applicant's and Staff's Oppositions to Late-Filed Environmental Contentions (March 13, 2000).

that in the past year he has gained a much higher and more detailed level of understanding of the design and operation of the facility, which is appropriate to the evidentiary phase of this proceeding, and which permits him to provide useful assistance to the Board.

Dr. Thompson is also extremely familiar with the art of probabilistic risk assessment, the ways that it can be used, and its strengths and limitations. He has personally conducted and/or participated in a number of studies which provide general analyses regarding the use of PRA.[13] Dr. Thompson's work related to PRA also includes a number of studies relating to the design and operation of individual facilities, including accident risks posed by plant operation and spent fuel pool storage. *See* Thompson Declaration, pars. 7 and 8.

Dr. Thompson's eminent qualifications are also demonstrated by the fact that his expert opinion has been accepted and adopted by government decisionmakers, including the NRC Staff. In 1979, for instance, the government of the German state of Lower Saxony accepted Dr. Thompson's findings about the potential for an exothermic reaction

---

[13] *See* Thompson Declaration, par. 7. These studies include a comprehensive review and evaluation of the state-of-the-art of PRA conducted for Greenpeace International (Hirsch, et al, IAEA Safety Targets and Probabilistic Risk Assessment (Hanover, Germany; Gesellschaft fur Okologische Forschung und Beratung, August 1989) (copy attached to Dr. Thompson's report as Thompson Rpt. Exh.: Hirsch, et al, 1989), a study of risks posed by high-density spent fuel at the Gorleben nuclear facility (Gordon Thompson et al, Report of the Gorleben International Review, Chapter 3, Potential Accidents and Their Effects (submitted to the government of Lower Saxony, March 1979) (copy attached to Dr. Thompson's report as Thompson Rpt. Exh.: Thompson, et al, 1979); articles on the use of PRA in emergency planning (*Potential Characteristics of Severe Reactor Accidents at Nuclear Plants; The Use of Probabilistic Risk Assessment in Emergency-Response Planning for Nuclear Power Plant Accidents,* published in Golding, et al., Preparing for Nuclear Power Plant Accidents (Westview Press: 1995) (copies attached to Dr. Thompson's report as Thompson Rpt. Exh: Golding, et al, 1995); and a study prepared for the Union of Concerned Scientists regarding the potential for escape of radioactive material from containment, Sholly and Thompson, The Source Term Debate

in high-density fuel pools. As a direct result, dry storage has been used for away-from-reactor storage of spent fuel throughout Germany.[14]

During the period 1986-1991, Dr. Thompson was commissioned by environmental groups to assess the safety of the military production reactors at the Savannah River Site, and to identify and assess alternative options for the production of tritium for the U.S. nuclear arsenal. Dr. Thompson's analyses of safety issues were recognized as accurate by nuclear safety officials at the US Department of Energy (DOE). *See* Thompson Declaration, par. 10.

In 1977, and again during the period 1996-1998, Dr. Thompson examined the safety of nuclear fuel reprocessing and liquid high-level waste management facilities at the Sellafield site in the UK. His investigation in the latter period was supported by a consortium of local governments in Ireland and the UK, and his findings were presented at briefings in the UK and Irish parliaments. As a direct result of Dr. Thompson's investigation, the UK Nuclear Installations Inspectorate (NII) required the operator of the Sellafield site to conduct extensive safety analyses. *See* Thompson Declaration, par. 10.

Although the NRC Staff has disparaged Dr. Thompson's qualifications earlier in this proceeding, the Staff now must also be included among the government entities that have accepted key elements of Dr. Thompson's views. For instance, the Staff has recently accepted Dr. Thompson's view that older fuel is more vulnerable to ignition in a

---

(Cambridge, Massachusetts: UCS, January 1986).

[14] *See* Thompson Declaration, par. 9; Ernst Albrecht (Minister-President of Lower Saxony), Declaration of the State government, Lower Saxony, West Germany Concerning the Proposed Nuclear Fuel Center at Gorleben (May 16, 1979). (An English translation of the Declaration is included as part of Thompson Rpt. Exh.: Thompson, et al, 1979).

state of partial drainage than in a state of total drainage, because convective heat transfer is suppressed by the presence of residual water at the base of the fuel assemblies. *See* Thompson 1999 Report at D-6.

A review of the positions taken by the Staff over the past year shows that the Staff has turned 180 degrees on this issue. Early in the proceeding, the NRC Staff either ignored the effects of partial drain-down, or attempted to dismiss its significance. *See,* for example, the NRC Staff's Draft Final Technical Study of Spent Fuel Accident Risk at Decommission Plants (noticed in the Federal Register at 65 F.3d Reg. 8,725 (February 22, 2,000), in which the Staff stated as follows:

> The staff has also considered a scenario with a rapid partial draindown to a level at or below the top of active fuel with a slow boiloff of water after the draindown. This could occur if a large breech (sic) occurred in the liner at or below the top of active fuel. Section 5.1 of NUREG/CR-0649 analyzes the partial draindown problem. *For the worst case draindown and a lower bound approximation for heat transfer to the water and the building the heatup time slightly less than the heatup time for the corresponding air cooled case. More accurate modeling could extend the heatup time to be comparable to or longer than the air cooled case.*

Id. at page A1-9 (emphasis added). *See also* NRC Staff Response to Intervenor's Request for Admission of Late-Filed Environmental Contentions at 21 (March 3, 2000) ("Dr Thompson's is the only opinion of which the Staff is aware that holds that fuel five years or more out of the reactor is susceptible to zircaloy/fire exothermic reaction"); *Id.* at 22 ("Dr Thompson's belief that such fuel is susceptible to exothermic reaction does not appear to be based on the scientific literature.")

In a recent meeting of the NRC's Advisory Committee on Reactor Safeguards ("ACRS"), however, the NRC Staff changed its position and conceded that the blockage of air flow caused by partial drainage of the fuel pool (*i.e.,* the "adiabiatic heatup case")

would permit aged fuel to reach ignition temperatures. *See* statement by Glenn Kelly, NRC Staff, Tim Collins, NRC Staff's Deputy Director of the Division of Systems and Safety Analysis at 477th ACRS Meeting, Transcript ("Tr.") at 28-30 (November 2, 2000).[15] Moreover, the Staff now considers the probability of a fire in aged fuel to be within the same range as the probability of severe reactor accident as predicted by NUREG-1150. *Id.*, Tr. at 17-18 (Staff opinion that although the risk of a fire in fuel aged ten years is "low," it "could still be in the ball park of operating reactors."). Accordingly, the Staff's latter-day confirmation of the correctness of Dr. Thompson's views on one of the most important technical issues in this case should serve as a corrective to the doubts that the Applicant and Staff have attempted to sow regarding Dr. Thompson's qualifications.

---

[15] For instance, Mr. Kelly stated:

> When we performed the thermal hydraulic analysis, we basically did it two ways. One was where we considered that we had air flow to provide oxygen to the potential oxidation of the fuel and also to provide cooling to the fuel and the other one was we assumed that there might have been flow blockage such that we had a near adiabatic heatup.
>
> In the adiabatic heatup case effectively as long as you have decay heat, you are going to eventually be able to get the fuel temperature up to whatever is your criteria . . ."

Tr. at 28. A copy of the meeting transcript is attached to Dr. Thompson's report as Thompson Rpt. Exh.: ACRS, 2000.

V. ORANGE COUNTY HAS RAISED A GENUINE AND MATERIAL DISPUTE REGARDING THE LIKELIHOOD OF A SEVERE SPENT FUEL POOL ACCIDENT AT HARRIS, SUCH THAT A HEARING MUST BE HELD TO DETERMINE WHETHER NEPA REQUIRES THE PREPARATION OF AN EIS.

A. Requirements of NEPA

1. Purpose of NEPA Analysis

NEPA is the "basic charter for the protection of the environment." 40 C.F.R. § 1500.1(1). Its fundamental purpose is to "help public officials make decisions that are based on understanding of environmental consequences, and take decisions that protect, restore, and enhance the environment." *Id.* NEPA requires federal agencies to examine the environmental consequences of their actions *before* taking those actions, in order to ensure "that important effects will not be overlooked or underestimated only to be discovered after resources have been committed or the die otherwise cast." *Robertson v. Methow Valley Citizen Council,* 490 U.S. 332, 349 (1989).

The primary method by which NEPA ensures that its mandate is met is the "action-forcing" requirement that a "detailed statement," known as an Environmental Impact Statement ("EIS"), be prepared before a federal agency takes any major action which may significantly affect the quality of the human environment. 42 U.S.C. § 4332(2)(C); 40 C.F.R. § 1502.1.[16] As the Court recognized in *Calvert Cliffs*

---

[16] 40 C.F.R. § 1508.2 is a regulation of the President's Council on Environmental Quality ("CEQ") for the implementation of NEPA. Although the NRC also has its own NEPA regulations, the CEQ regulations are binding on the NRC unless compliance would "be inconsistent with statutory requirements." Executive Order 11991, 3 C.F.R. 124 (1978). *See also Baltimore Gas and Electric Co. v. Natural Resources Defense Council,* 462 U.S. 1983); *Andrus v. Sierra Club,* 442 U.S. 347 (1979); NRC Final Rule, Environmental Protection Regulations for Domestic Licensing and Related Regulator

Coordinating Committee v. AEC, 449 F.2d 1109, 1113 (D.C. Cir. 1971), a NEPA analysis involves "a finely tuned and systematic" balancing of "environmental amenities" against "economic and technical considerations." To "ensure that the balancing analysis is carried out and given full effect," an environmental impact statement must be "detailed" and the analysis carried out "fully and in good faith." *Id.*, 449 F.2d at 1114-15.

As required by NEPA and its implementing regulations, an EIS must describe, among other things, (1) the "environmental impact" of the proposed action, (2) any "adverse environmental effects which cannot be avoided should the proposal be implemented," (3) any "alternatives to the proposed action," and (4) any "irreversible and irretrievable commitments of resources which would be involved in the proposed action should it be implemented. . . ." *Id.* The EIS must be circulated in draft for comment by the public and other affected agencies, in order to assure that relevant environmental information will "be made available to the larger audience that may also play a role in both the decisionmaking process and the implementation" of a proposed decision. *Robertson*, 490 U.S. at 349.

2. Decision not to prepare EIS must be supported by a "hard look"

NEPA requires that, in actions involving substantial undertakings, such as the instant proposal to substantially increase the inventory of radioactive material to be stored

---

Functions and Related Conforming Amendments, 49 Fed. Reg. 9,352 (March 12, 1984) (restating Commission view that, "as a matter of law, the NRC as an independent regulatory agency can be bound by CEQ's NEPA regulations only insofar as those regulations re procedural or ministerial in nature. NRC is not bound by those portions of CEQ's NEPA regulations which have a substantive impact on the way in which the Commission performs its regulatory functions.") Orange County notes that all of the CEQ regulations cited in this brief are procedural in nature, and thus are binding on the NRC. Moreover, none of these regulations was disavowed by the Commission when it

at the Harris nuclear plant site, an agency may not dispense with an EIS unless and until it has prepared an Environmental Assessment ("EA") that evaluates whether an EIS is required, taking into account all relevant factors. *LaFlamme v. FERC*, 852 F.2d 389, 399 (9th Cir. 1988) (hydroelectric power plant license suspended for failure to prepare an EA). The EA must take a "hard look" at the potential environmental consequences of the action. *Maryland National Park and Planning Commission v. U.S. Postal Service*, 487 F.2d 1029, 1040 (D.C. Cir. 1973); *Foundation on Economic Trends v. Heckler*, 756 F.2d 143, 154 (D.C. Cir. 1985) (EA must "attempt to evaluate seriously the risk[s]" posed by proposed action.)[17]

Here, the EA prepared by the NRC Staff falls far short of constituting the "hard look" required by NEPA. The EA focuses on structural failure of a fuel pool, leading to total loss of water.[18] EA at 5-6. The present state of knowledge about fuel pool

---

promulgated its own set of NEPA regulations at 49 Fed. Reg. 9,352.

[17] In *Foundation on Economic Trends*, the Court affirmed an injunction prohibiting the National Institutes of Health from releasing genetically engineered recombinant-DNA-containing organisms into the environment, because the discussion of environmental impacts in the EA was too cursory to support a determination that no EIS was required. As the Court explained, NIH:

> must 'provide sufficient evidence and analysis for determining whether to prepare an environmental impact statement or a finding of no significant impact,' 40 C.F.R. § 1508.9(a)(1). Ignoring possible environmental consequences will not suffice. Nor will a mere conclusory statement that the number of recombinant-DNA-containing organisms will be small and subject to processes limiting survival. Instead, NIH must attempt to evaluate seriously the risk that emigration of such organisms from the test site will create ecological disruption. Instead, NIH must attempt to evaluate seriously the risk that emigration of such organisms from the test site will create ecological disruption.

756 F.2d at 155.

[18] In support of its limited discussion of that limited issue, the EA cites four NRC

accidents, however, is not confined to that accident scenario or the four reports cited by the NRC Staff. As Dr. Thompson demonstrates in his report, the loss of water from the Harris fuel pools is an almost certain outcome of a degraded-core accident, with containment failure or bypass, at the Harris reactor. The EA does not address this matter. In addition, Dr. Thompson's report shows that partial loss of water from a pool can be a more severe accident condition than total loss of water. The NRC Staff has conceded the correctness of Dr. Thompson's view. *See* discussion, *supra,* in Section IV.B. Thus, the EA not only fails to take a "hard look" at the questions raised by Dr. Thompson, but it does not even reflect the concerns of the NRC's own technical staff.

3. A high level of uncertainty weighs in favor of preparing an EIS

As the Court noted in *Foundation on Economic Trends,* "one of the specific criteria for determining whether an EIS is necessary is '[t]he degree to which the possible effects on the human environment are highly uncertain or involve unique or unknown risks.'" 756 F.2d at 155, *citing* 40 C.F.R. § 1508.27(b)(5). Thus, in *Blue Mountains Biodiversity Project v. Blackwood,* 161 F.3d 1208, 1213 (9th Cir. 1998), the Court found that "[a] project may have significant environmental impacts where its effects are 'highly uncertain or involve unique or unknown risks.'" *See also Morgan v. Walter,* 728 F.Supp. 1483, 1489 (D. Id. 1989).

The CEQ requirement to consider the degree of uncertainty of environmental

---

reports: NUREG/CR-4982, Severe Accidents in Spent Fuel Pools in Support of Generic Issue 82; NUREG/CR-5176, Seismic Failure and Cask Drop Analysis of the Spent Fuel Pools at Two Representative Nuclear Power Plants; NUREG/CR-5281, Value/Impact Analysis of Accident Preventative and Mitigative Options for Spent Fuel Pools; and NUREG-1353, Regulatory Analysis for the Resolution of Generic Issue 82: Beyond Design Basis Accidents in Spent Fuel Pools. EA at 5-6.

impacts is particularly important in the instant case, where a high level of uncertainty is a key feature of probabilistic risk assessment, and where any new PRA performed by the NRC Staff or CP&L would take the art of PRA into a significant realm of uncharted territory. *See* Thompson Report at 13-16, 17.

4. Impacts that are not "remote and speculative" must be addressed in an EIS.

As the Board noted in LBP-00-19, all parties are in agreement that the NRC is not required to prepare an EIS for the purpose of addressing environmental impacts that are "remote and speculative." *Id.*, slip op. at 12. However, the Commission has not provided definitive guidance on what the phrase means. The most recent Commission pronouncements on this subject stem from a series of decisions in a spent fuel pool expansion case for the Vermont Yankee plant. *See Vermont Yankee Nuclear Power Corp.* (Vermont Yankee Nuclear Power Station), CLI-90-7, 32 NRC 129, (1990); *Vermont Yankee Nuclear Power Corp.* (Vermont Yankee Nuclear Power Station), CLI-90-4, 31 NRC 333 (1990). In CLI-90-4, the Commission reversed a determination by the Appeal Board that an accident with a probability of 10^{-4} is remote and speculative, and remanded for development of more information on the plausibility or probability of the accident scenario at issue. *Id.*, 31 NRC at 335. The Commission ordered that if the Appeal Board found the probability of the entire accident sequence was 10^{-4} or more, it was to return the case to the Commission; otherwise, it was to make its own decision as to whether the probability was remote and speculative or not. *Id.* at 335-36. In CLI-90-7, the Commission clarified that low probability is the "key to applying NEPA's rule of reason" test to contentions alleging adverse environmental impacts from a specified

accident scenario. 32 NRC at 131.

The guidance provided by CLI-90-4 and CLI-90-7 can be summarized as follows: low probability is key to determining what impacts are remote and speculative; it is important to examine the particulars of each case; and the Commission is unwilling to hold, as a matter of law, that 10^{-4} is so low a probability as to be remote and speculative. As the Licensing Board observes, this last point suggests that a probability of 10^{-5} should not be rejected out of hand as remote and speculative.

Orange County submits that in determining what constitute "remote and speculative" environmental impacts, it is important to follow the Commission's guidance of examining the circumstances of each case independently. The Licensing Board should apply quantitative criteria cautiously, in light of relevant qualitative factors and the factual circumstances of each case. One of the most important qualitative factors that must be considered is the level of uncertainty that accompanies any PRA. *See* 40 C.F.R. § 1508.27(b)(5) and discussion in Section VI.B.3, *supra.* Before relying on a quantitative probability estimate to rule out the preparation of an EIS, the Board should consider such factors as the degree to which the estimate is affected by uncertainty. For example, it is necessary to take into account the degree to which unknown aspects of plant behavior are addressed through unverifiable judgments rather than calculations; the degree to which acts of malice, gross errors in design, unforeseen accident sequences or phenomena, or degraded standards of operation could influence the outcome of the analysis if they were considered; and the degree to which the results of the analysis depend on new and untested applications of PRA techniques. *See* Thompson Report at 17. In reflection of these uncertainties, any quantitative probability estimates should be expressed as a range

of probabilities, rather than a point estimate. *Id.*

The circumstances of this case dictate that there will be a very high level of uncertainty in any probability analysis that is applied to the Harris spent fuel pools. Not only is the art of PRA generally subject to significant uncertainty, but the analysis required here breaks new ground in a number of areas. As Dr. Thompson discusses in his report and its appendices, Level 2 PRA is generally inadequate to address onsite effects of containment releases because it typically focuses on releases to the atmosphere, for purposes of modeling offsite doses. *See* Thompson Report at 18. Moreover, little work has been done to date on issues of onsite transport and distribution of radioactive material, and the complexities of the situation make analysis "exceptionally difficult." *See* Thompson Report at 18 and Appendix D at D-3 – D-4. With respect to the implications of heat transfer in spent fuel pools, the NRC Staff is still in the process of developing its understanding of the associated phenomena. *Id.* at 23, 40-41. Moreover, as Dr. Thompson concludes in his report, there is currently no technical basis for providing an estimate of uncertainty for probability calculations regarding spent fuel pool accidents at Harris. *See* Thompson Report at 42. Given this high level of uncertainty, it would not be defensible to dismiss the need for an EIS based on currently available quantitative estimates of the probability of a spent fuel pool accident at Harris.

In evaluating the adequacy of any PRA to support a decision not to prepare an EIS, the Board should also be mindful of the Commission's policy to limit the use of PRA to "the extent that it is supported by the state-of-the-art in terms of methods and data." Policy Statement, Use of Probabilistic Risk Assessment Methods in Nuclear Regulatory Activities, Section IV, 60 Fed. Reg. 42,622 (August 16, 1995). Thus, the

Licensing Board should examine the extent to which it reflects the state-of-the-art, including depth and detail of analysis, uncertainty analysis, and peer review. As discussed in Dr. Thompson's report, given the complexity of the issues presented by the seven-step scenario posited by Orange County, it would be impossible for any party to conduct a state-of-the-art PRA on the hazards of spent fuel pool expansion in the extremely short time period allotted for this Subpart K presentation.

To the extent that the Board considers a quantitative standard for what constitutes a foreseeable accident requiring an EIS, it is clear that an accident probability of 10^{-4} would fall squarely within the range of impacts already recognized by the Commission as requiring the preparation of an EIS or the conduct of emergency planning. A degraded-core reactor accident with containment failure or bypass is recognized as a credible event by the NRC for purposes of evaluating environmental impacts in EIS's, as well as requiring emergency planning for the ten and fifty mile Emergency Planning Zones around nuclear plants. In addition, licensees are obligated to perform IPE's to examine the site-specific potential for accidents of this type. The lower bound of probability for a spent fuel pool accident is set by the probability of a degraded-core reactor accident with

interdiction of vast areas of land, have never been evaluated by the NRC in an EIS.

5. Orange County has demonstrated the plausibility and foreseeability of a severe spent fuel pool accident at Harris.

In this proceeding, Dr. Thompson has provided a credible minimum value best estimate of overall accident risk of 1.6×10^{-5}, with a range from 0.2×10^{-5} to 1.2×10^{-4} per year. Thompson Report at 42. To make this estimate, Dr. Thompson provided a step-by-step detailed analysis, using data provided by CP&L and the NRC Staff. His analysis raises substantial and material factual disputes with the NRC Staff's EA by clearly demonstrating that the NRC Staff and CP&L have overlooked important factors which raise the probability of a severe spent fuel pool accident at Harris far above levels previously estimated by the Staff and CP&L.

It must be observed here that it is not Orange County's responsibility to "prove" that the probability of an accident at the Harris plant is above a certain level. In the first place, as Dr. Thompson asserts, it is not possible to provide a definitive calculation of any accident probability at Harris. Moreover, it is the NRC Staff who ultimately bears the burden of proving that no EIS is required here. Orange County has met its burden of going forward by setting forth significant and material evidence that throws the previous findings of the NRC Staff into contention and doubt, and demonstrates the "plausibility or probability" of a severe spent fuel pool accident, such that an EIS is warranted. The Board would have no lawful basis for refusing to order the preparation of an EIS based on this record.

6. The Board may not rule out an EIS that would address one form of environmental harm, based on an EA that assumes impacts are avoided or minimized by causing another form of environmental harm.

As discussed in the Thompson Report, there are many assumptions that go into a PRA. For purposes of evaluating the seven-step accident scenario set forth at page 13 of LBP-00-19, the analyst must make several key assumptions that have a substantial bearing on the adequacy of the analysis to satisfy the requirements for an adequate EA under NEPA. These assumptions have to do with whether workers will (a) incur harm in order to restore cooling to the spent fuel pools, or (b) violate NRC regulations in order to restore cooling to the spent fuel pools. Orange County submits that the NRC Staff may not lawfully base a decision not to prepare an EIS for the Harris license amendment on an analysis that assumes that workers would either incur harm or violate NRC safety regulations in order to minimize the probability of the accident. To allow such assumptions would violate the fundamental principles of NEPA that require the protection of the environment through detailed disclosure of any significant environmental harm that may be caused by major federal actions. *See Louisiana Energy Services* (Claiborne Enrichment Center), LBP-96-26, 44 NRC 331, 339 (1996), and cases cited therein (NEPA establishes "substantive goals for the Nation," that "the federal government should use 'all practicable means and measures' to protect the environment"); *Robertson v. Methow Valley*, 490 U.S. at 349 (NEPA's goal of protecting environment served through maximum disclosure of significant adverse environmental impacts).

a. Assumptions re harm to workers

The analysis of steps 4 and 5 in the seven-step scenario requires the determination of what constitutes an extreme dose such that CP&L personnel or other emergency workers would be precluded from re-entering the plant to perform the six backup functions for restoring cooling water to the fuel storage pools in the event that the primary cooling system fails. *See* Thompson Report, Sections 4.4 and 4.5. These allowable doses must be compared to likely radiation levels in the control room and the Technical Support Center, from which controls are taken and instructions given. It may also be necessary to compare them to likely radiation levels and/or the Fuel Handling Building and/or Reactor Auxiliary Building, where workers will have to enter in order to implement remedial actions. If radiation levels exceed the dose that is considered extreme enough to preclude access by workers, then it must be assumed for purposes of the analysis that remedial efforts are ineffectual and that therefore the accident will continue to progress, *i.e.*, that the probability of the next event in the sequence (inability to restart any pool cooling or makeup systems due to extreme radiation doses) is one.

The question of what constitutes a dose extreme enough to preclude extreme access is a legal issue, answerable by NRC regulations establishing occupational limits for radiation exposures at 5 rems TEDE per year. As discussed below, under these regulations, any dose exceeding 5 rems TEDE per year is expected to result in a level of harm to worker safety and health that is beyond the expected norm and that involves an assessment of trade-offs between adverse health effects to workers and the benefits achieved if the worker suffers increased exposure. It is exactly these trade-offs -- of harm to the health of workers versus the resulting benefits such as the likelihood of preventing

an accident -- that must be assessed in an EIS. Accordingly, in assessing whether the plant is accessible for purposes of restoring spent fuel cooling functions, any dose above 5 rems TEDE per annum must be presumed to preclude personnel access. Otherwise, the probability analysis improperly assumes acceptance of one type of environmental harm (radiation exposure to plant workers beyond regulatory limits) as the justification for avoiding another type of environmental harm (harm to the general public and the environment caused by radiological releases from the spent fuel pools), without going through the process of fully disclosing these competing harms in an EIS. [19]

There are a number of reasons why for purposes of this analysis, a dose of 5 rems TEDE per year must be considered the upper limit of acceptable dose limits, beyond which doses are presumptively harmful. First and foremost, 5 rems TEDE per year is the occupational dose limit established by NRC standards for protection of worker safety and health. [20] *See* 10 C.F.R. § 20.1201(a)(1)(i).[21] The 5 rem standard was recommended by

---

[19] Deposition testimony suggests the existence of a material dispute on this issue. During their depositions, experts for the NRC Staff and CP&L expressed differing opinions about how to answer the question of what constitutes an extreme dose sufficient to preclude access to the Harris plant. Dr. Gareth Parry, Senior Level Advisor for PRA in the Division of System Safety and Analysis of the NRC's Office of Nuclear Reactor Regulation ("NRR"), asserted that he would probably assume that doses were high enough to preclude access if they exceeded regulatory limits. Deposition of Dr. Gareth W. Parry, Transcript ("Tr.") at 91-92 (October 19, 2000). NRC witness Stephen LaVie, Health Physicist with the Office of NRR, stated that the Staff's "initial feeling" is that it is appropriate to use the U.S. Environmental Protection Agency's recommended Protective Action Guideline ("PAG") of 25 rem per accident for actions needed to save human lives. Deposition of Stephen LaVie, Tr. at 14 (October 20, 2000). Dr. Edward T. Burns, CP&L's expert on PRA, testified that there is no "firm threshold" for a dose that would preclude access to the plant, and that it is appropriate to look at the relative severity of radiation levels and make a probability calculation as to how likely a person would be to enter the radiation environment. Deposition of Dr. Edward T. Burns, Tr. at 58-59 (October 20, 2000).

[20] Although somewhat higher exposures are permitted by Part 20 regulations, these

the International Commission on Radiological Protection ("ICRP"), and was accepted by the NRC on the basis that it would maintain the annual risk of radiation-induced health damage to about 8×10^{-4}. Proposed Rule, Standards for Protection Against Radiation, 51 Fed. Reg. 1,092, 1,102 (January 9, 1986). Thus, the NRC has made a reasoned judgment that 5 rems TEDE is the maximum level of radiation that a worker can receive in a year and stay within acceptable bounds of occupational risk levels.

Second, compliance with Part 20 occupational exposure limits is assumed in the Final EIS that supported the issuance of an operating license for Harris. *See* NUREG-0972, Final Environmental Statement Related to the Operation of Shearon Harris Nuclear Power Plant Units 1 and 2, Docket Nos. STN-50-400 and STN-50-401, Carolina Power and Light Company at 5-28 (October 1993). As discussed in NUREG-0972:

> Experience shows that the dose to nuclear plant workers varies from reactor to reactor and from year to year. For environmental-impact purposes, it can be projected by using the experience to date with modern PWRs. Recently licensed 1000-Mwe

---

exposures must be planned in advance, with numerous accompanying safeguards, and thus are inapplicable to accident conditions. *See* 10 C.F.R. § 20.1206(a), which permits a "planned special exposure" if it would not cause an individual to receive a dose from all planned special exposures and all doses in excess of the limits to exceed (1) the numerical values of any of the dose limits in § 20.1201(a) in any year; and (2) five times the annual dose limits in § 20.1201(a) during the individual's lifetime. Thus, they are not applicable to an unplanned severe accident situation.

Orange County recognizes that based on his professional judgment as a scientist, Dr. Thompson has applied the limits for planned special exposures in his analysis. *See* Thompson Report at 32-33. The County believes that NEPA requires setting a stricter threshold, in order to avoid hidden assumptions of environmental harm in an EA that should otherwise be disclosed in an EIS. It should be noted that the doses calculated by Dr. Thompson are far in excess of either the normal occupational limits *or* the planned occupational limits.

[21] In addition, doses must be further reduced, to the extent reasonably achievable, under the Commission's ALARA ["As Low As Reasonably Achievable] regulations. See 10 C.F.R. § 20.1101(b).

> PWRs are operated in accordance with the post-1975 regulatory requirements and guidance that place increased emphasis on maintaining occupational exposure at nuclear power plants ALARA. These requirements and guidance are outlined primarily in 10 CFR 20, Standard Review Plan (SRP) Chapter 12 (NUREG-08000), and Regulatory Guide (RG) 8.8, "Information Relevant to Ensuring that Occupational Radiation Exposures at Nuclar Power Stations Will be as Low as Is Reasonably Achievable."
>
> The applicant's proposed implementation of these requirements and guidelines is reviewed by the NRC staff during the licensing process, and the results of that review are reported in the staff's Safety Evaluation Report. The license is granted only after the review indicates that an ALARA program can be implemented. In addition, regular reviews of operating plants are performed to determine whether the ALARA requirements are being met.

Having assumed regulatory compliance with Part 20 in the FEIS, the Staff would have no lawful basis for now assuming that the proposed expansion of the Harris spent fuel pools poses no cognizable risk of a spent fuel pool accident because workers will be expected to incur unlawful radiation doses in order to minimize that risk.

Third, in setting Protective Action Guidelines ("PAGs") for workers during radiological emergencies, the U.S. Environmental Protection Agency ("EPA") recommends the use of a 5 rem per year "upper bound" for worker exposures during a radiological emergency.[22] *See* U.S. EPA, Manual of Protective Action Guides and Protective Actions for Nuclear Incidents at 2-10 (October 1991). *In addition,* the EPA recommends that doses be kept "as low as reasonably achievable," *i.e.*, even lower than 5 rems per year, as is consistent with the regulation of normal occupational exposures. *Id.* The EPA's guidance makes it clear that doses above 10 rems TEDE per year are only justified by the protection of "valuable property," and doses up to 25 rems TEDE per year are only justified "for life saving activities and the protection of large populations." EPA

---

[22] Thus, although the EPA accepts a dose of 5 rems per accident, it also assumes that no

considers doses above 25 rems TEDE per year to be justified only under the most extreme circumstances:

> Situations may also rarely occur in which a dose in excess of 25 rem for emergency exposure would be unavoidable in order to carry out a lifesaving operation or to avoid extensive exposure of large populations. It is not possible to prejudge the risk that one should be allowed to take to save the lives of others. However, persons undertaking any emergency operations in which the dose will exceed 25 rem to the whole body should do so only on a voluntary basis and with full awareness of the risks involved, including the numerical levels of dose at which acute effects of radiation will be incurred and numerical estimates of the risk of delayed effects.

Id. at 2-11.

It is clear that both NRC regulations and EPA guidance establish a presumption of harm if radiation doses exceed the annual dose limit of 5 rems. Doses above 5 rems are seen by EPA as involving trade-offs, with the individual worker's life and health being off-set against the value of property, or the value of saving many lives. In other words, EPA recognizes that these exposures are hazardous to nuclear power plant workers, and that they are only justified if they would serve a greater good.

In summary, for purposes of determining whether or not the preparation of an EIS is warranted, it is appropriate and consistent with NEPA to assume that a radiation environmental yielding doses in excess of 5 rems TEDE per annum would preclude access by emergency personnel. To assume otherwise would effectively countenance one type of environmental harm (radiation exposure to plant workers beyond NRC safety limits and EPA guidance levels) in order to avoid another type of environmental harm (harm to the general public and the environment caused by radiological release from the

---

person is exposed to more than 5 rems in a year.

spent fuel pools). Such an assumption would also be grossly inconsistent with the EIS for the Harris operating license, which assumed that Harris would operate in compliance with NRC regulations.

Orange County wishes to emphasize that NEPA requires the assumption that doses above 5 rems TEDE per year preclude access in this particular legal context, which is the performance of analysis intended to evaluate whether an EIS is necessary. As discussed above, it would not be appropriate to assume, in this context, that plant workers would incur significant harm in order to maintain the probability of a spent fuel pool accident below the level that would call for an EIS. In the real-life context of an accident, it would be appropriate to assume that occupational dose limits may be exceeded. In a full-scale EIS, it may also be appropriate to examine the environmental impacts to workers of attempting to prevent the progression of a severe accident for purposes of examining the trade-offs posed by alternatives and mitigative measures. It is neither appropriate nor lawful, however, to attempt to justify the Staff's refusal to prepare an EIS for this proposed spent fuel pool expansion, based on the assumption that workers would incur unlawful and significant radiation injuries in order to prevent the accident from progressing.

b. Other assumptions of regulatory violations

As discussed above, it may not be assumed, for purposes of avoiding an EIS, that workers are exposed to environmental harm by incurring doses above occupational exposure limits. Similarly, the analysis may not assume the violation of regulations which were promulgated for the purpose of protecting protect public health and safety, and which the 1983 FEIS assumed would be met in order to maintain environmental

impacts within an acceptable level.

For instance, General Design Criterion 19 of Appendix A to 10 C.F.R. Part 50 requires that the control room must be designed to prevent workers from receiving doses above 5 rems during an accident. As Dr. Thompson demonstrates in his report, radiation levels in the control room would far exceed these levels, and would, in fact, be lethal. For purposes of rationalizing the refusal to prepare an EIS, it is not lawful to assume that the requirements of GDC 19 would be violated in order to minimize the probability of an accident.

CP&L's own procedures for severe accident management appear to set up a conflict between severe accident responses and compliance with NRC safety regulations. CP&L recognizes, in its Severe Accident Management Guidelines ("SAMGs"), that in responding to a severe accident, it may be necessary to take actions which conflict with the plant's Technical Specifications.[23] Moreover, these procedures "may not have been safety reviewed." The Tech Specs are an integral part of the Harris license, and thus the 1983 FEIS necessarily assumed that they would be complied with. Non-compliance with technical specifications could raise new safety challenges, in addition to any threats stemming from the severe accident that is underway. Any assumption of regulatory violations for purposes of avoiding a severe accident must therefore be fully addressed in an EIS, rather than relied on in an EA for the purpose of avoiding an EIS.

---

[23] *See* CP&L, Plant Operating manual, Volume 11, Part 1, SAMG-SAMP-001, Severe Accident Management Guidelines Program Document, Rev. 2 at 3, excerpt attached to Dr. Thompson's report as Thompson Rpt. Exh. CP&L-POM.

VI. THE PROCEDURAL CIRCUMSTANCES OF THIS PROCEEDING REQUIRE THAT A HEARING BE HELD.

As discussed above in Section III.B,3, the discovery period in this expedited Subpart K proceeding was a brief 60 days. By the end of that period, none of the parties had been able to complete their analyses or report the results. Much of the work remained to be done at the time depositions were taken. Thus, it was impossible to question the NRC Staff's or CP&L's witnesses regarding the results of their analyses or how they were arrived at.

The review of the evidence presented in this Subpart K proceeding undoubtedly will raise questions about the assumptions underlying various calculations, and the methodology used. Of course such questions can't be identified with specificity at this juncture, because Orange County has not had a chance to review the presentations of the other parties. Nevertheless, at this juncture it is appropriate to raise the concern that due to the complexity of the issues raised in this proceeding, and due to the fact that none of the parties could be questioned about the results of their analyses in discovery, disagreements about the substantiality or materiality of any factual disputes between the parties should be seen in the light most favorable to Orange County. Not sure about this argument. Come back to it.

VII. RESPONSE TO BOARD'S QUESTIONS

A. Best Estimate of Overall Probability of Sequence Set Forth in Chain of Events

In Question 1, the Board asked:

> What is the submitting party's best estimate of the overall probability of the sequence set forth in the chain of seven events in the CP&L and BCOC's filings, set forth in page 13 supra? The estimates should utilize plant-specific data where

> available and should utilize the best available generic data where generic data is relied upon.

LBP-00-19, slip op. at 17. Information responsive to this request is provided in detail in the attached report by Dr. Thompson, including the appendices. Dr. Thompson uses the best available plant specific and generic data and explains the basis for his choices of data. As discussed in Dr. Thompson's report at page 42, he has found that a minimum value for the best estimate of the overall probability of completion of the seven-part event sequence is 1.6×10^{-5} per year (point estimate), with a range from 0.2×10^{-5} to 1.2×10^{-4} per year.

B. Recent developments in the estimation of probabilities of individual events

The Board's second question asks the parties to take careful note of recent developments in the estimation of individual events in the sequence, and questions whether new data or models suggest any modification of the probability estimate set forth in NUREG-1353. In addition, the Board asks for comment on the concerns expressed in an ACRS letter of April 13, 2000. These questions are addressed in Dr. Thompson's report, Section 5 at page 54.

C. Scope of EIS Required

The Board's third question asks what is the scope of an EIS that would be required, assuming that the Board should decide that the probability of an accident cannot be dismissed as remote and speculative. Dr. Thompson provides a technical response to this question in Section 6 of his report, at page 45. This summary addresses the legal question posed by the Board, which appears to be whether the Board could somehow

order that the scope of the EIS be limited to the seven-part accident scenario listed in LBP-00-19.

Orange County submits that the Board would not have that degree of authority. Once an EIS is undertaken, NEPA requires that an agency must take a "hard look" at the environmental impacts of a proposed major federal action, which includes the examination of all reasonably foreseeable and significant adverse impacts.

Moreover, the preparation of an EIS is a public process, designed to maximize public involvement in the consideration of impacts and alternatives. *See Robertson v. Methow, supra.* Thus, the EIS must be subject to public notice and comment, including the offer of an opportunity to interested members of the public to request an adjudicatory hearing on its adequacy. Any member of the public would have the right to challenge the overall adequacy of the EIS to address the adverse environmental impacts of the project. Orange County does not believe that it would be consistent with the public participation requirements of NEPA if an interested member of the public could lawfully be precluded from raising valid concerns about an EIS, based on procedural grounds relating to this proceeding.

VIII. CONCLUSION

Orange County has provided substantial and material evidence and legal arguments which demonstrate that the NRC Staff has failed to justify its refusal to prepare an Environmental Impact Statement for the proposed expansion of spent fuel pool storage capacity at the Harris reactor. Therefore, Orange County has raised a substantial and material factual dispute with the Staff, and is entitled to a hearing on Contention EC-6.

Respectfully submitted,

Diane Curran
Harmon, Curran, Spielberg, & Eisenberg, L.L.P.
1726 M Street N.W., Suite 600
Washington, D.C. 20036
202/328-3500
e-mail: Dcurran@harmoncurran.com

November 20, 2000

UNITED STATES OF AMERICA
NUCLEAR REGULATORY COMMISSION
BEFORE THE ATOMIC SAFETY AND LICENSING BOARD

In the Matter of	)	
	)	
CAROLINA POWER & LIGHT	)	Docket No. 50-400 -OLA
(Shearon Harris Nuclear	)	ASLBP No. 99-762-02-LA
Power Plant)	)	
	)	

CERTIFICATE OF SERVICE

I certify that on November 20, 2000, copies of Orange County's Detailed Summary of Facts, Data, and Arguments, Etc., were served on the service list below by e-mail and/or first class mail as indicated below. :

Secretary of the Commission
Attention: Rulemakings and Adjudications Staff
U.S. Nuclear Regulatory Commission
Washington, D.C. 20555
E-mail: hearingdocket@nrc.gov

Steven Carr, Esq.
Carolina Power & Light Co.
411 Fayetteville Street Mall
Post Office Box 1551 - CPB 13A2
Raleigh, NC 27602-1551
E-mail: steven.carr@cplc.com

Susan L. Uttal, Esq.
Jennifer M. Euchner, Esq.
Office of the General Counsel
U.S. Nuclear Regulatory Commission
Washington, D.C. 20555
E-mail: slu@nrc.gov, jme@nrc.gov

Moses Carey, Chair
Orange County Board of Commissioners
P.O. Box 8181
Hillsborough, NC 27278
E-mail:Mcarey@mindspring.com

Paul Thames
County Engineer
Orange County Board of Commissioners
P.O. Box 8181
Hillsborough, NC 27278

Adjudicatory File
Atomic Safety and Licensing Board
U.S. Nuclear Regulatory Commission
Washington, D.C. 20555-0001

Dr. Peter S. Lam
Atomic Safety and Licensing Board
Mail Stop T 3F-23
U.S. Nuclear Regulatory Commission
Washington, D.C. 20555
E-mail: psl@nrc.gov

Thomas D. Murphy
Atomic Safety and Licensing Board
Mail Stop T 3F-23
U.S. Nuclear Regulatory Commission
Washington, D.C. 20555
E-mail: fjs@nrc.gov

John H. O'Neill, Jr., Esq.
Douglas Rosinski, Esq.
Shaw, Pittman, Potts & Trowbridge
2300 N Street N.W.
Washington, D.C. 20037-1128
E-mail: john_o'neill@shawpittman.com,
douglas.rosinski@shawpittman.com

G. Paul Bollwerk, III, Chairman
Atomic Safety and Licensing Board
Mail Stop T 3F-23
U.S. Nuclear Regulatory Commission
Washington, D.C. 20555
E-mail: gpb@nrc.gov

Diane Curran

November 20, 2000 **BCOC Summary Exh. 1**

UNITED STATES OF AMERICA
NUCLEAR REGULATORY COMMISSION
BEFORE THE ATOMIC SAFETY AND LICENSING BOARD

In the Matter of	)	
	)	
CAROLINA POWER & LIGHT	)	Docket No. 50-400 -LA
(Shearon Harris Nuclear	)	
Power Plant)	)	
	)	

DECLARATION OF DR. GORDON THOMPSON

I, Gordon Thompson, declare as follows:

1. I am the executive director of the Institute for Resource and Security Studies (IRSS), a nonprofit, tax-exempt corporation based in Massachusetts. Our office is located at 27 Ellsworth Avenue, Cambridge, MA 02139. IRSS was founded in 1984 to conduct technical and policy analysis and public education, with the objective of promoting peace and international security, efficient use of natural resources, and protection of the environment.

2. I participated in the preparation of the contentions contained in Orange County's Request for Admission of Late-filed Environmental Contentions (January 31, 2000). The contentions are also supported by a report that I authored, entitled "Risks and Alternative Options Associated With Spent Fuel Storage at the Shearon Harris Nuclear Power Plant (February 1999) (Thompson 1999 Report). One of Orange County's environmental Contentions, designated as Contention EC-6, was admitted by the Licensing Board for litigation.

3. In support of Orange County's participation in the evidentiary proceeding with respect to Contention EC-2, I have prepared a report entitled "The Potential for a Large Atmospheric Release of Radioactive Material from Spent Fuel Pools at the Harris Nuclear Power Plant: The Case of a Pool Release Initiated by a Severe Reactor Accident" (20 November 2000). I have also assisted Orange County in the preparation of the detailed legal and evidentiary summary that is being filed today, Detailed Summary of Facts, Data and Arguments and Sworn Submission on Which Orange County Intends to Rely at Oral Argument to Demonstrate the Existence of a Genuine and Substantial Dispute of Fact With the Licensee Regarding the Proposed Expansion of Spent Fuel Storage Capcity at the Harris Nuclear Power Plant With Respect to the Need to Prepare an Environmental Impact Statement to Address the Increased Risk of a Spent Fuel Pool Accident (Contention EC-6) ("Summary"). The technical factual statements in my report and in the Summary are true and correct to the best of my knowledge, and the technical opinions expressed therein are based on my best professional judgment.

I am prepared to testify as an expert witness on behalf of the County, with respect to the facts and opinions set forth in my Report.

4. I am an expert in the area of technical safety and environmental analysis related to nuclear facilities. My Curriculum Vitae is provided here as Attachment A.

5. I received an undergraduate education in science and mechanical engineering at the University of New South Wales, in Australia. Subsequently, I pursued graduate studies at Oxford University and received from that institution a Doctorate of Philosophy in mathematics in 1973, for analyses of plasmas undergoing thermonuclear fusion. During my graduate studies I was associated with the fusion research program of the UK Atomic Energy Authority. My undergraduate and graduate work provided me with a rigorous education in the methodologies and disciplines of science, mathematics, and engineering.

6. Since 1977, a significant part of my work has consisted of technical analyses of safety and environmental issues related to nuclear facilities. These analyses have been sponsored by a variety of nongovernmental organizations and local, state and national governments, predominantly in North America and western Europe. Drawing upon these analyses, I have provided expert testimony in legal and regulatory proceedings, and have served on committees advising US government agencies. To illustrate my expertise, I provide more detailed information on my experience below.

7. I have conducted, directed, and/or participated in a number of studies that evaluated aspects of the design and operation of nuclear power plants with respect to severe accident probabilities and consequences. These include general studies and studies of individual plants. For instance, with respect to general studies, in 1986, I participated in the preparation of a study by the Union of Concerned Scientists of the potential for escape of radioactive material from containment (Sholly and Thompson 1986). In the late 1980's, I was part of a team of four scientists which prepared a comprehensive critique of the state of the art of probabilistic risk assessment for Greenpeace International. (Hirsch et al, 1989). I published two other articles on the relevance of PRA to emergency planning in a book entitled Preparing for Nuclear Power Plant Accidents (Westview Press: 1995) (Golding, et al., 1995). All of these studies required me to be highly familiar with the design and operation of nuclear power plants, as well as the characteristics of probabilistic risk assessment.

8. I have also done a great deal of work on the risks posed by individual nuclear facilities. In addition to performing the studies described elsewhere in this Declaration, I have studied the risks posed by the Seabrook plant (U.S.), the La Hague facility (France), the Darlington Station (Canada), and the Pickering Station (Canada). All of these studies required me to become familiar with the relevant details of the design and operation of the facilities involved.

9. To a significant degree, my work has been accepted or adopted by the governmental agencies involved. During the period 1978-1979, for example, I served on an international review group commissioned by the government of Lower Saxony (a state in

Germany) to evaluate a proposal for a nuclear fuel cycle center at Gorleben. I led the subgroup that examined accident risks and alternative options with lower risk. One of the risk issues that I identified and analyzed was the potential for an exothermic reaction of fuel cladding in a high-density fuel pool if water is lost. I identified partial loss of water as a more severe condition than total loss of water. I identified and described alternative fuel storage options with lower risk. The Lower Saxony government accepted my findings and ruled that high-density pool storage was not an acceptable option at Gorleben. As a direct result, policy throughout Germany has been to use dry storage, rather than high-density pool storage, for away-from-reactor storage of spent fuel.

10. My work has also influenced decisionmaking by safety officials in the U.S. Department of Energy (DOE). During the period 1986-1991, I was commissioned by environmental groups to assess the safety of the military production reactors at the Savannah River Site, and to identify and assess alternative options for the production of tritium for the US nuclear arsenal. Initially, much of the relevant information was classified or otherwise inaccessible to the public. Nevertheless, I addressed safety issues through analyses that were recognized as accurate by nuclear safety officials at DOE. I eventually concluded that the Savannah River reactors could not meet the safety objectives set for them by DOE. DOE subsequently reached the same conclusion. The current national policy for tritium production is to employ commercial reactors, an option that I had concluded was technically attractive but problematic from the perspective of nuclear weapons proliferation.

11. In 1977, and again during the period 1996-1998, I examined the safety of nuclear fuel reprocessing and liquid high-level waste management facilities at the Sellafield site in the UK. My investigation in the latter period was supported by a consortium of local governments in Ireland and the UK, and my findings were presented at briefings in the UK and Irish parliaments. I identified safety issues that were not addressed in any publicly available literature about the Sellafield site. As a direct result of my investigation, the UK Nuclear Installations Inspectorate (NII) required the operator of the Sellafield site to conduct extensive safety analyses. These analyses have confirmed the significance of the safety issues that I identified.

11. Most recently, the NRC Staff has accepted my view that older fuel is more vulnerable to ignition in a state of partial drainage than in a state of total drainage, because convective heat transfer is suppressed by the presence of residual water at the base of the fuel assemblies. *See* Thompson 1999 Report at D-6. Although the NRC Staff previously ignored or disparaged my opinion, statements by members of the NRC Staff during a recent meeting of the Advisory Committee on Reactor Safeguards (ACRS) demonstrate that the Staff has now confirmed the validity of my expert opinion on the matter.[1] Moreover, the Staff now considers the probability of a fire in aged fuel to be within the same range as the probability of severe reactor accident as predicted by NUREG-1150.[2]

---

[1] ACRS, 2000, pages 28-30.

[2] Ibid., pages 17-18.

12. In the course of the Harris license amendment proceeding, I have gained a great deal of knowledge regarding the specific design features of the Harris plant, as well as its operation. Taken together with my general knowledge of nuclear power plant design and operation, this provides me with a more than adequate basis for applying principles of risk analysis to the Harris reactor. In addition, during the course of the Harris license amendment proceeding, I have updated and supplemented my already-strong knowledge regarding the characteristics of reactor accidents and spent fuel pool accidents, as well as the current body of knowledge regarding the application of PRA techniques to the problem at hand. It is important to observe in this context that in order to be able to review and comment on a PRA, or to perform PRA analysis, it is neither necessary nor possible to have a high level of expertise in every conceivable area of nuclear power plant design and operation. A PRA is an interdisciplinary study requiring an understanding of many different aspects of nuclear power plant design and operation. Typically, PRA's are conducted by teams of individuals who contribute knowledge and understanding from different areas of expertise. In order to review or contribute to a PRA, it is necessary to have broad general knowledge of nuclear power plant design and operation, a general understanding of the specific design and operational features of the plant that is being analyzed, and a strong familiarity with the methodology, strengths and weaknesses of PRA. I believe I have the requisite degree of knowledge and understanding in all of these areas.

13. Accordingly, I have considerable expertise regarding the technical issues that have been raised by the parties in this proceeding. I believe that my knowledge and skills will be of substantial use to the Licensing Board in weighing the evidence.

****

I declare, under penalty of perjury, that the foregoing facts provided in my Declaration are true and correct to the best of my knowledge and belief, and that the opinions expressed herein are based on my best professional judgment.

Executed on 20 November 2000.

_____

Gordon Thompson

Attachment A

INSTITUTE FOR RESOURCE AND SECURITY STUDIES

Curriculum Vitae:
GORDON R. THOMPSON

July 2000

Professional expertise

Consulting technical and policy analyst in the fields of energy, environment, sustainable development, and international security.

Education

- D.Phil. in applied mathematics, Oxford University (Balliol College), 1973.
- B.E. in mechanical engineering, University of New South Wales, Sydney, Australia, 1967.
- B.Sc. in mathematics & physics, University of New South Wales, 1966.

Current appointment

- Executive director, Institute for Resource & Security Studies (IRSS), Cambridge, MA.

Project sponsors and tasks (selected)

- Massachusetts Water Resources Authority, 2000: evaluated risks associated with water supply and wastewater systems that serve greater Boston.
- Canadian Senate, Energy & Environment Committee, 2000: reviewed risk issues associated with the Pickering Nuclear Generating Station.
- Greenpeace International, Amsterdam, 2000: reviewed impacts associated with the La Hague nuclear complex in France.
- Orange County, NC, 1999-2000: assessed safety issues associated with spent fuel storage at the Harris nuclear plant.
- Government of Ireland, 1998-2000: developed framework for assessment of impacts and alternative options associated with the Sellafield nuclear complex in the UK.
- Clark University, Worcester, MA, 1998-1999: participated in review of a foundation's grant-making related to climate change.
- UN High Commissioner for Refugees, 1998: developed a strategy for conflict management in the CIS region.

- General Council of County Councils (Ireland), W Alton Jones Foundation (USA), and Nuclear Free Local Authorities (UK), 1996- 1998: assessed safety and economic issues of nuclear fuel reprocessing in the UK; assessed alternative options.
- Environmental School, Clark University, Worcester, MA, 1996: session leader at the Summer Institute, "Local Perspectives on a Global Environment".
- Greenpeace Germany, Hamburg, 1995-1996: a study on war, terrorism and nuclear power plants.
- HKH Foundation, New York, and Winston Foundation for World Peace, Washington, DC, 1994-1996: studies and workshops on preventive action and its role in US national security planning.
- Carnegie Corporation of New York, Winston Foundation for World Peace, Washington, DC, and others, 1995: collaboration with the Organization for Security and Cooperation in Europe to facilitate improved coordination of activities and exchange of knowledge in the field of conflict management.
- World Bank, 1993-1994: a study on management of data describing the performance of projects funded by the Global Environment Facility (joint project of IRSS and Clark University).
- International Physicians for the Prevention of Nuclear War, 1993-1994: a study on the international control of weapons-usable fissile material.
- Government of Lower Saxony, Hannover, Germany, 1993: analysis of standards for radioactive waste disposal.
- University of Vienna (using funds supplied by the Austrian government), 1992: review of radioactive waste management at the Dukovany nuclear plant, Czech Republic.
- Sandia National Laboratories, 1992-1993: advice to the US Department of Energy's Office of Foreign Intelligence.
- US Department of Energy and Battelle Pacific Northwest Laboratories, 1991-1992: advice for the Intergovernmental Panel on Climate Change regarding the design of an information system on technologies that can limit greenhouse gas emissions (joint project of IRSS, Clark University and the Center for Strategic and International Studies).
- Winston Foundation for World Peace, Boston, MA, and other funding sources, 1992-1993: development and publication of recommendations for strengthening the International Atomic Energy Agency.
- MacArthur Foundation, Chicago, IL, W. Alton Jones Foundation, Charlottesville, VA, and other funding sources, 1984-1993: policy analysis and public education on a "global approach" to arms control and disarmament.

- Energy Research Foundation, Columbia, SC, and Peace Development Fund, Amherst, MA, 1988-1992: review of the US government's tritium production (for nuclear weapons) and its implications.
- Coalition of Environmental Groups, Toronto, Ontario (using funds supplied by Ontario Hydro under the direction of the Ontario government), 1990-1993: coordination and conduct of analysis and preparation of testimony on accident risk of nuclear power plants.
- Greenpeace International, Amsterdam, Netherlands, 1988-1990: review of probabilistic risk assessment for nuclear power plants.
- Bellerive Foundation, Geneva, Switzerland, 1989-1990: planning for a June 1990 colloquium on disarmament and editing of proceedings.
- Iler Research Institute, Harrow, Ontario, 1989-1990: analysis of regulatory response to boiling-water reactor accident potential.
- Winston Foundation for World Peace, Boston, MA, and other funding sources, 1988-1989: analysis of future options for NATO (joint project of IRSS and the Institute for Peace and International Security).
- Nevada Nuclear Waste Project Office, Carson City, NV (via Clark University, Worcester, MA), 1989-1990: analyses of risk aspects of radioactive waste management and disposal.
- Ontario Nuclear Safety Review (conducted by the Ontario government), Toronto, Ontario, 1987: review of safety aspects of CANDU reactors.
- Washington Department of Ecology, Olympia, WA, 1987: analysis of risk aspects of a proposed radioactive waste repository at Hanford.
- Natural Resources Defense Council, Washington, DC, 1986-1987: preparation of testimony on hazards of the Savannah River Plant.
- Lakes Environmental Association, Bridgton, ME, 1986: analysis of federal regulations for disposal of radioactive waste.
- Greenpeace Germany, Hamburg, 1986: participation in an international study on the hazards of nuclear power plants.
- Three Mile Island Public Health Fund, Philadelphia, PA, 1983-1989: studies related to the Three Mile Island nuclear plant.
- Attorney General, Commonwealth of Massachusetts, Boston, MA, 1984-1989: analyses of the safety of the Seabrook nuclear plant.
- Union of Concerned Scientists, Cambridge, MA, 1980-1985: studies on energy demand and supply, nuclear arms control, and the safety of nuclear installations.
- Conservation Law Foundation of New England, Boston, MA, 1985: preparation of testimony on cogeneration potential at a Maine papermill.
- Town & Country Planning Association, London, UK, 1982-1984: coordination and conduct of a study on safety and radioactive waste implications of the proposed Sizewell nuclear plant.

- US Environmental Protection Agency, Washington, DC, 1980-1981: assessment of the cleanup of Three Mile Island Unit 2 nuclear plant.
- Center for Energy & Environmental Studies, Princeton University, Princeton, NJ, and Solar Energy Research Institute, Golden, CO, 1979-1980: studies on the potentials of renewable energy sources.
- Government of Lower Saxony, Hannover, FRG, 1978-1979: coordination and conduct of studies on safety aspects of the proposed Gorleben nuclear fuel cycle center.

Other experience (selected)

- Principal investigator, project on "Exploring the Role of 'Sustainable Cities' in Preventing Climate Disruption", involving IRSS and three other organizations, 1990-1991.
- Visiting fellow, Peace Research Centre, Australian National University, 1989.
- Principal investigator, Three Mile Island emergency planning study, involving IRSS and Clark University, Worcester, MA, 1987-1989.
- Co-leadership (with Paul Walker) of a study group on nuclear weapons proliferation, Institute of Politics, Harvard University, 1981.
- Foundation (with others) of an ecological political movement in Oxford, UK, which contested the 1979 Parliamentary election.
- Conduct of cross-examination and presentation of evidence, on behalf of the Political Ecology Research Group, at the 1977 Public Inquiry into proposed expansion of the reprocessing plant at Windscale, UK.
- Conduct of research on plasma theory (while a PhD candidate), as an associate staff member, Culham Laboratory, UK Atomic Energy Authority, 1969-1973.
- Service as a design engineer on coal-fired plants, New South Wales Electricity Commission, Sydney, Australia, 1968.

Publications (selected)

- *Hazard Potential of the La Hague Site: An Initial Review*, a report for Greenpeace International, May 2000.
- *A Strategy for Conflict Management: Integrated Action in Theory and Practice* (with Paula Gutlove), Working Paper No. 7, IRSS, Cambridge, MA, March 1999.
- *Risks and Alternative Options Associated with Spent Fuel Storage at the Shearon Harris Nuclear Power Plant*, a report for Orange County, NC, February 1999.

- *High Level Radioactive Liquid Waste at Sellafield: Risks, Alternative Options and Lessons for Policy*, IRSS, Cambridge, MA, June 1998.
- "Science, democracy and safety: why public accountability matters", in F. Barker (ed), *Management of Radioactive Wastes: Issues for local authorities*, Thomas Telford, London, 1998.
- "Conflict Management and the OSCE" (with Paula Gutlove), *OSCE/ODIHR Bulletin*, Volume 5, Number 3, Fall 1997.
- *Safety of the Storage of Liquid High-Level Waste at Sellafield* (with Peter Taylor), Nuclear Free Local Authorities, UK, November 1996.
- *Assembling Evidence on the Effectiveness of Preventive Actions, their Benefits, and their Costs: A Guide for Preparation of Evidence*, IRSS, Cambridge, MA, August 1996.
- *War, Terrorism and Nuclear Power Plants*, Working Paper No. 165, Peace Research Centre, Australian National University, Canberra, October 1996.
- "The Potential for Cooperation by the OSCE and Non-Governmental Actors on Conflict Management" (with Paula Gutlove), *Helsinki Monitor*, Volume 6 (1995), Number 3.
- "Potential Characteristics of Severe Reactor Accidents at Nuclear Plants", "Monitoring and Modelling Atmospheric Dispersion of Radioactivity Following a Reactor Accident" (with Richard Sclove, Ulrike Fink and Peter Taylor), "Safety Status of Nuclear Reactors and Classification of Emergency Action Levels", and "The Use of Probabilistic Risk Assessment in Emergency Response Planning for Nuclear Power Plant Accidents" (with Robert Goble), in D. Golding, J. X. Kasperson and R. E. Kasperson (eds), *Preparing for Nuclear Power Plant Accidents*, Westview Press, Boulder, CO, 1995.
- *A Data Manager for the Global Environment Facility* (with Robert Goble), Environment Department, The World Bank, June 1994.
- *Preventive Diplomacy and National Security* (with Paula Gutlove), Winston Foundation for World Peace, Washington, DC, May 1994.
- *Opportunities for International Control of Weapons-Usable Fissile Material*, ENWE Paper #1, International Physicians for the Prevention of Nuclear War, Cambridge, MA, January 1994.
- "Article III and IAEA Safeguards", in F. Barnaby and P. Ingram (eds), *Strengthening the Non-Proliferation Regime*, Oxford Research Group, Oxford, UK, December 1993.
- *Risk Implications of Potential New Nuclear Plants in Ontario* (prepared with the help of eight consultants), a report for the Coalition of Environmental Groups, Toronto, submitted to the Ontario Environmental Assessment Board, November 1992 (3 volumes).
- *Strengthening the International Atomic Energy Agency*, Working Paper No. 6, IRSS, Cambridge, MA, September 1992.

- *Design of an Information System on Technologies that can Limit Greenhouse Gas Emissions* (with Robert Goble and F. Scott Bush), Center for Strategic and International Studies, Washington, DC, May 1992.
- *Managing Nuclear Accidents: A Model Emergency Response Plan for Power Plants and Communities* (with six other authors), Westview Press, Boulder, CO, 1992.
- "Let's X-out the K" (with Steven C. Sholly), *Bulletin of the Atomic Scientists*, March 1992, pp 14-15.
- "A Worldwide Programme for Controlling Fissile Material", and "A Global Strategy for Nuclear Arms Control", in F. Barnaby (ed), *Plutonium and Security*, Macmillan Press, UK, 1992.
- *No Restart for K Reactor* (with Steven C. Sholly), Working Paper No. 4, IRSS, Cambridge, MA, October 1991.
- *Regulatory Response to the Potential for Reactor Accidents: The Example of Boiling-Water Reactors*, Working Paper No. 3, IRSS, Cambridge, MA, February 1991.
- *Peace by Piece: New Options for International Arms Control and Disarmament*, Working Paper No. 1, IRSS, Cambridge, MA, January 1991.
- *Developing Practical Measures to Prevent Climate Disruption* (with Robert Goble), CENTED Research Report No. 6, Clark University, Worcester, MA, August 1990.
- "Treaty a Useful Relic", *Bulletin of the Atomic Scientists*, July/August 1990, pp 32-33.
- "Practical Steps for the 1990s", in Sadruddin Aga Khan (ed), *Non-Proliferation in a Disarming World*, Proceedings of the Groupe de Bellerive's 6th International Colloquium, Bellerive Foundation, Geneva, Switzerland, 1990.
- *A Global Approach to Controlling Nuclear Weapons*, Occasional Paper published by the Institute for Resource and Security Studies, October 1989.
- *IAEA Safety Targets and Probabilistic Risk Assessment* (with three other authors), Greenpeace International, Amsterdam, August 1989.
- *New Directions for NATO* (with Paul Walker and Pam Solo), published jointly by IRSS and the Institute for Peace and International Security (both of Cambridge, MA), December 1988.
- "Verifying a Halt to the Nuclear Arms Race", in F. Barnaby (ed), *A Handbook of Verification Procedures*, Macmillan Press, UK, 1990.
- "Verification of a Cutoff in the Production of Fissile Material", in F. Barnaby (ed), *A Handbook of Verification Procedures*, Macmillan Press, UK, 1990.

- "Severe Accident Potential of CANDU Reactors," Consultant's Report in *The Safety of Ontario's Nuclear Power Reactors*, Ontario Nuclear Safety Review, Toronto, February 1988.
- *Nuclear-Free Zones* (edited with David Pitt), Croom Helm Ltd, Beckenham, UK, 1987.
- *Risk Assessment Review For the Socioeconomic Impact Assessment of the Proposed High-Level Nuclear Waste Repository at Hanford Site, Washington* (edited; written with five other authors), prepared for the Washington Department of Ecology, December 1987.
- *The Nuclear Freeze Revisited* (written with Andrew Haines), Nuclear Freeze and Arms Control Research Project, Bristol, UK, November 1986. Variants of the same paper have appeared as Working Paper No. 18, Peace Research Centre, Australian National University, Canberra, February 1987, and in *ADIU Report*, University of Sussex, Brighton, UK, Jan/Feb 1987, pp 6-9.
- *International Nuclear Reactor Hazard Study* (with fifteen other authors), Greenpeace, Hamburg, Federal Republic of Germany (2 volumes), September 1986.
- "What happened at Reactor Four" (the Chernobyl reactor accident), *Bulletin of the Atomic Scientists*, August/September 1986, pp 26-31.
- *The Source Term Debate: A Report by the Union of Concerned Scientists* (with Steven C. Sholly), Union of Concerned Scientists, Cambridge, MA, January 1986.
- "Checks on the spread" (a review of three books on nuclear proliferation), *Nature*, 14 November 1985, pp 127-128.
- Editing of *Perspectives on Proliferation*, Volume I, August 1985, published by the Proliferation Reform Project, IRSS.
- "A Turning Point for the NPT ?", *ADIU Report*, University of Sussex, Brighton, UK, Nov/Dec 1984, pp 1-4.
- "Energy Economics", in J. Dennis (ed), *The Nuclear Almanac*, Addison-Wesley, Reading, MA, 1984.
- "The Genesis of Nuclear Power", in J. Tirman (ed), *The Militarization of High Technology*, Ballinger, Cambridge, MA, 1984.
- *A Second Chance: New Hampshire's Electricity Future as a Model for the Nation* (with Linzee Weld), Union of Concerned Scientists, Cambridge, MA, 1983.
- *Safety and Waste Management Implications of the Sizewell PWR* (prepared with the help of six consultants), a report to the Town & Country Planning Association, London, UK, 1983.
- *Utility-Scale Electrical Storage in the USA: The Prospects of Pumped Hydro, Compressed Air, and Batteries*, Princeton University report PU/CEES #120, 1981.

- *The Prospects for Wind and Wave Power in North America*, Princeton University report PU/CEES # 117, 1981.
- *Hydroelectric Power in the USA: Evolving to Meet New Needs*, Princeton University report PU/CEES # 115, 1981.
- Editing and part authorship of "Potential Accidents & Their Effects", Chapter III of *Report of the Gorleben International Review*, published in German by the Government of Lower Saxony, FRG, 1979--Chapter III available in English from the Political Ecology Research Group, Oxford, UK.
- *A Study of the Consequences to the Public of a Severe Accident at a Commercial FBR located at Kalkar, West Germany*, Political Ecology Research Group report RR-1, 1978.

Expert presentations and testimony (selected)

- UK Consensus Conference on Radioactive Waste Management, 1999: provided invited testimony on information and decision-making.
- Joint Committee on Public Enterprise and Transport, Irish Parliament, 1999: provided invited testimony on nuclear fuel reprocessing and international security.
- UK and Irish Parliaments, 1998: gave members' briefings on risks and alternative options associated with nuclear fuel reprocessing in the UK.
- Center for Russian Environmental Policy, Moscow, 1996: presentation at a forum in parallel with the G-7 Nuclear Safety Summit.
- Lacey Township Zoning Board, New Jersey, 1995: testimony regarding radioactive waste management.
- Ontario Court of Justice, Toronto, Ontario, 1993: testimony regarding Canada's Nuclear Liability Act.
- Oxford Research Group, seminar on "The Plutonium Legacy", Rhodes House, Oxford, UK, 1993: presentation on nuclear safeguards.
- Defense Nuclear Facilities Safety Board, Washington, DC, 1991: testimony regarding the proposed restart of K-reactor, Savannah River Site.
- Conference to consider amending the Partial Test Ban Treaty, United Nations, New York, 1991: presentation on a global approach to arms control and disarmament.
- US Department of Energy, hearing on draft EIS for new production reactor capacity, Columbia, SC, 1991: presentation on tritium need and implications of tritium production options.
- Society for Risk Analysis, 1990 annual meeting, New Orleans, special session on nuclear emergency planning: presentation on real-time techniques for anticipating emergencies.

- Parliamentarians' Global Action, 11th Annual Parliamentary Forum, United Nations, Geneva, 1990: presentation on the potential for multilateral nuclear arms control.
- Advisory Committee on Nuclear Facility Safety, public meeting, Washington, DC, 1989: submission on public access to information and on government accountability.
- Peace Research Centre, Australian National University, seminar on "Australia and the Fourth NPT Review Conference", Canberra, 1989: proposal of a universal nuclear weapons non-proliferation regime.
- Carnegie Endowment for International Peace, Conference on "Nuclear Non-Proliferation and the Role of Private Organizations", Washington, DC, 1989: options for reform of the non-proliferation regime.
- US Department of Energy, EIS scoping hearing, Columbia, SC, 1988: appropriate scope of an EIS for new production reactor capacity.
- International Physicians for the Prevention of Nuclear War, 6th and 7th Annual Congresses, Koln, FRG, 1986 and Moscow, USSR, 1987: relationships between nuclear power and the threat of nuclear war.
- County Council, Richland County, SC, 1987: implications of severe reactor accidents at the Savannah River Plant.
- Maine Land Use Regulation Commission, 1985: cogeneration potential at facilities of Great Northern Paper Company.
- Interfaith Hearings on Nuclear Issues, Toronto, Ontario, 1984: options for Canada's nuclear trade and Canada's involvement in nuclear arms control.
- Sizewell Public Inquiry, UK, 1984: safety and radioactive waste implications of the proposed Sizewell nuclear plant.
- New Hampshire Public Utilities Commission, 1983: electricity demand and supply options for New Hampshire.
- Atomic Safety & Licensing Board, US Nuclear Regulatory Commission, 1983: use of filtered venting at the Indian Point nuclear plants.
- US National Advisory Committee on Oceans and Atmosphere, 1982: implications of ocean disposal of radioactive waste.
- Environmental & Energy Study Conference, US Congress, 1982: implications of radioactive waste management.

Miscellaneous

- Married, two children.
- Extensive experience in public speaking before professional and lay audiences, and in interviews with print and broadcast journalists.
- Author of numerous newspaper, newsletter, and magazine articles and book reviews.

Contact information

Institute for Resource and Security Studies
27 Ellsworth Avenue, Cambridge, Massachusetts 02139, USA
Phone: (617) 491-5177 Fax: (617) 491-6904 E-mail: irss@igc.org

****

BCOC Summary Exh. 2

INSTITUTE FOR RESOURCE AND SECURITY STUDIES
27 Ellsworth Avenue, Cambridge, Massachusetts 02139, USA
Phone: (617) 491-5177 Fax: (617) 491-6904
Email: irss@igc.org

THE POTENTIAL FOR A LARGE, ATMOSPHERIC RELEASE OF RADIOACTIVE MATERIAL FROM SPENT FUEL POOLS AT THE HARRIS NUCLEAR POWER PLANT:

The Case of a Pool Release Initiated by a Severe Reactor Accident

A report

prepared for

Orange County
North Carolina

by

Gordon Thompson

20 November 2000

Acknowledgements

This report was prepared as part of a program of work by the Institute for Resource and Security Studies (IRSS) pursuant to a contract between IRSS and Orange County, North Carolina. The report was written by Gordon Thompson, the executive director of IRSS.

The primary purpose of this report is to support an intervention by Orange County in licensing proceedings regarding the proposed activation of two currently unused spent fuel storage pools at the Harris nuclear power plant. In this context, the author has worked with Diane Curran, attorney for Orange County, to obtain information through formal discovery processes. Through these processes, information has been obtained from Carolina Power & Light Company (CP&L) and the Staff of the US Nuclear Regulatory Commission (NRC).

Gordon Thompson is solely responsible for the content of this report.

About the author

Gordon Thompson is the executive director of IRSS. He received an undergraduate education in science and mechanical engineering, in Australia. Subsequently, he studied at Oxford University and received from that institution a doctorate of philosophy in mathematics in 1973.

During his professional career, Dr Thompson has performed technical and policy analyses on a range of issues related to international security, energy supply, environmental protection, and the sustainable use of natural resources. Since 1977, a significant part of his work has consisted of technical analyses of safety and environmental issues related to nuclear facilities. These analyses have been sponsored by a variety of nongovernmental organizations and local, state and national governments, predominantly in North America and Western Europe. Dr Thompson has provided expert testimony in legal and regulatory proceedings, and has served on committees advising US government agencies. In the course of his work on nuclear facility safety issues, Dr Thompson has reviewed and conducted numerous analyses related to probabilistic risk assessment (PRA) at Levels 1, 2 and 3.[1]

Dr Thompson has a substantial record of experience in addressing the hazard posed by high-density spent fuel pools. In 1979, as a member of a group of scientists appointed by the government of Lower Saxony (a West German state) to review the proposed Gorleben nuclear complex, the author presented analysis on the potential for exothermic oxidation reactions in high-density fuel pools.[2] This analysis was accepted by the government, which ruled that high-density pools would not be an acceptable feature of the complex.[3] Recently, the NRC Staff agreed with the author's findings about the implications of residual water for heat transfer if water is lost from a high-density fuel pool. The Staff had previously disputed those findings.[4]

---

[1] See, for example: Golding et al, 1995: Hirsch et al, 1989; Thompson, 1999; Thompson et al, 1979.

[2] Thompson et al, 1979.

[3] Albrecht, 1979.

[4] This point is addressed further in Section 4.7 and Appendix H.

About IRSS

The Institute for Resource and Security Studies is an independent, non-profit corporation. It was founded in 1984 to conduct technical and policy analysis and public education, with the objective of promoting international security and sustainable use of natural resources. IRSS projects always reflect a concern for practical solutions to resource, environment and security problems, and can range from detailed technical studies to preparing educational materials accessible to the public. IRSS actively seeks collaborative relationships with other organizations as it pursues its goals.

Abstract

This report examines the potential for an exothermic oxidation reaction in the spent fuel pools at the Harris nuclear power plant. Such a reaction could yield a large, atmospheric release of radioactive material. A variety of sequences of events could lead to such an outcome.

In this report, the focus is on a postulated sequence of events that begins with a reactor accident which involves a degraded reactor core and the failure or bypass of containment. The reactor accident is accompanied by an interruption of pool cooling and makeup, and causes a release of radioactive material which contaminates the site. This radioactive contamination precludes actions that are needed to restore pool cooling or makeup, thereby leading to a loss of pool water by evaporation. Following water loss, exothermic oxidation reactions occur in the affected pools, leading to a large release of radioactive material from these pools to the atmosphere.

For each stage in this postulated sequence of events, this report reviews the state of technical understanding, including understanding about the probabilities of particular outcomes at that stage. Estimates of probabilities are developed for selected outcomes at each stage. These estimates are combined to provide an indication of the minimum probability that the postulated sequence of events yields an exothermic oxidation reaction in pools C and D.

Table of contents

1. Introduction

2. Context for this report

   2.1 Event sequences leading to releases from pools
   2.2 The event sequence identified by the ASLB
   2.3 Strengths and limitations of PRA
   2.4 The concept of a "best estimate"

3. Scope of IRSS analysis

   3.1 Requirements for a comprehensive analysis
   3.2 Constraints on the scope of analysis
   3.3 IRSS's analytic approach

4. Analysis of the seven-part event sequence identified by the ASLB

   4.1 A degraded-core accident at the Harris reactor
   4.2 Containment failure or bypass
   4.3 Loss of spent fuel pool cooling and makeup
   4.4 Onsite radiation exposure
   4.5 Effects of onsite radiation exposure on plant operation
   4.6 Loss of pool water by evaporation
   4.7 Exothermic oxidation reactions in the Harris pools
   4.8 Summary

5. Evolution of knowledge about potential releases from fuel pools

6. Assessing the environmental impacts of high-density fuel pools

(Appendices are listed on the next page.)

Appendices

Appendix A Bibliography

Appendix B Relevant characteristics of the Harris plant

Appendix C Level 1 PRA analysis

Appendix D Level 2 PRA analysis

Appendix E Radiation exposure at the Harris site after a reactor accident

Appendix F Radiation exposure: health effects and regulatory limits

Appendix G Loss of water by evaporation from Harris pools

Appendix H Initiation of exothermic oxidation reactions

1. Introduction

In December 1998, Carolina Power & Light Company (CP&L) requested an amendment of its operating license for the Harris nuclear power plant. The amendment, if granted by the Nuclear Regulatory Commission (NRC), would permit the activation of two currently unused spent fuel pools at Harris. In response to that application, Orange County commissioned the Institute for Resource and Security Studies (IRSS) to prepare a report which examined the risks and alternative options associated with spent fuel storage at Harris.[5]

Subsequently, Orange County intervened in the licensing proceedings related to the proposed activation of the currently unused pools, which are known as pools C and D. In August 2000, the NRC's Atomic Safety and Licensing Board (ASLB) admitted into the licensing proceedings a contention submitted by Orange County. The ASLB Order which admitted this contention requested the parties in the proceedings -- Orange County, CP&L and the NRC Staff -- to answer some specific technical questions.[6]

The ASLB's questions pertain to a postulated sequence of events at Harris that could lead to a large, atmospheric release of radioactive material from the fuel pools, including pools C and D. This sequence of events was identified in the abovementioned IRSS report, and was brought to the attention of the ASLB by Orange County. The postulated sequence proceeds as follows. A degraded-core reactor accident occurs, with failure or bypass of containment. The reactor accident is accompanied by an interruption of pool cooling and makeup, and causes a release of radioactive material which contaminates the site. This radioactive contamination precludes actions that are needed to restore pool cooling or makeup, thereby leading to a loss of pool water by evaporation. Following water loss, exothermic oxidation reactions occur in the affected pools.[7]

The primary purpose of the present report is to provide Orange County with the technical basis to respond to the ASLB's questions. In addition, this report provides a review of a number of generic issues that are pertinent to the potential

---

[5] Thompson, 1999.

[6] ASLB, 2000.

[7] Although the ASLB Order does not specifically ask the parties to address this point, the exothermic reactions would almost certainly lead to a large release of radioactive material from the affected pools to the atmosphere.

for releases from high-density fuel pools. That potential can exist at any high-density pool.

The event sequence that is described above is not the only event sequence that could lead to a large, atmospheric release from the Harris pools. To provide a context, other event sequences are briefly mentioned in this report. However, the focus here is on the event sequence that is identified in the ASLB's Order.

Structure of this report

This report has two components. One component is a main report that is intended for a non-specialist audience. The second component is a set of eight appendices. Appendix A provides a bibliography. The seven remaining appendices provide technical information to support the main report. Citations in the main report and the appendices refer, unless otherwise indicated, to documents listed in Appendix A.

Remainder of the main report

The remainder of this main report begins, in Section 2, with a discussion of some issues that provide a context for the report. Then, Section 3 describes the scope of the technical analysis by IRSS that underlies this report. Section 4 summarizes IRSS's analysis of the event sequence identified in the ASLB's Order. Section 5 discusses the evolution of knowledge about potential releases from fuel pools. The ASLB has asked that parties to the Harris licensing proceedings "take careful note" of this evolution.[8] Finally, Section 6 sets forth some requirements for assessing the environmental impacts of high-density fuel pools.

2. Context for this report

2.1 Event sequences leading to releases from pools

Any high-density spent fuel pool has the potential to experience a large, atmospheric release of radioactive material. In order for that potential to be manifested in an actual event, four conditions must be satisfied. First, some fuel assemblies must be present in the pool. Second, water must be lost from the pool, so that some fuel assemblies are partially or totally exposed to air. Third, the characteristics of the exposed fuel (including its decay heat) and the physical configuration of the pool and its surrounding building (rack configuration, water

[8] ASLB, 2000, page 17.

level, building ventilation, etc.) must be such that the exposed fuel cladding experiences a self-sustaining exothermic oxidation reaction (typically an air-zirconium or steam-zirconium reaction). Fourth, radioactive material liberated from the fuel by exothermic reactions must reach the outside atmosphere through pre-existing pathways in the pool building envelope, or through pathways that are created during the accident.

At the Harris plant, spent fuel is stored in pools A and B at a high density, and CP&L proposes to store fuel in pools C and D, also at a high density. Thus, the first of the abovementioned conditions is satisfied. How might the second condition be satisfied, so that fuel in one or more of the Harris pools is partially or totally exposed to air? This question was addressed in a previous IRSS report, which stated:[9]

> "A variety of events, alone or in combination, might lead to partial or complete uncovering of spent fuel in the Harris pools. Relevant types of event include:
>
> > (a) an earthquake, cask drop, aircraft crash, human error, equipment failure or sabotage event that leads to direct leakage from the pools;
> > (b) siphoning of water from the pools through accident or malice;
> > (c) interruption of pool cooling, leading to pool boiling and loss of water by evaporation; and
> > (d) loss of water from active pools into adjacent pools or canals that have been gated off and drained."

The techniques of probabilistic risk assessment (PRA) may be used to examine the potential for a Harris pool to lose water through such an event, thereby leading to uncovering of fuel. PRA techniques and related analytic techniques could be further used to examine the potential for uncovering of fuel to lead to an atmospheric release. Within the limits of their accuracy, as discussed in Section 2.3, PRA techniques could provide an understanding of the probabilities and consequences of a range of potential scenarios that involve atmospheric releases of radioactive material from the Harris pools.

IRSS has pointed out that this understanding might be developed by extending the Individual Plant Examination (IPE) and Individual Plant Examination for

---

[9] Thompson, 1999, page C-1.

External Events (IPEEE) studies that have been performed for Harris.[10] The Harris IPE used PRA techniques to estimate the probabilities and source terms (types of radioactive release) of potential degraded-core accidents at the Harris reactor, accounting for "internal" accident-initiating events.[11] The Harris IPEEE was a more limited study of the potential for degraded-core accidents to arise from "external" accident-initiating events.[12]

Extensions of the Harris IPE and IPEEE could examine scenarios in which a severe accident or design-basis accident at the Harris reactor might accompany, initiate or exacerbate a release from the Harris fuel pools, or vice versa. For example, these extended studies could examine the event sequence that is discussed in Section 2.2.

As an illustration of the need for a systematic examination of the potential for an atmospheric release from the Harris pools, consider the potential for leakage of water after an earthquake or cask drop.[13] If either event breached a pool, the entire inventory of water in that pool could potentially drain into large spaces that are below the base of the pools. Depending upon the configuration of the pool gates at that time, pools that are not breached could lose water via the breached pool. Eventually, water might be lost from all four pools.[14] A large, atmospheric release of radioactive material could follow.

2.2 The event sequence identified by the ASLB

In the context of the Harris licensing proceedings, the ASLB has asked the parties to focus on a particular sequence of events. This report adopts such a focus.

---

[10] Thompson, 1999, page C-2.

[11] CP&L, 1993.

[12] CP&L, 1995b.

[13] In the present configuration of the fuel handling building at Harris, physical stops preclude the presence of the cask crane above pools A, B and C. However, the presence of the cask crane above pool D is precluded only by electrical interlocks (Summitt, 1999, page 9). These interlocks could be defeated by accident or malice.

[14] At Harris, an unbreached pool that is connected to a breached pool could drain down only to the top of the fuel racks. However, the residual water in the unbreached pool could begin boiling within a few hours. Draining of the unbreached pool to the top of the racks could lead to a harsh radiation environment within the fuel handling building. Exothermic oxidation reactions in the breached pool could release radioactive material, leading to a harsh radiation environment within and beyond the building. Zirconium-steam reactions in the breached pool could release hydrogen which explodes within the building. These phenomena could preclude the provision of cooling or makeup water to the pools. In this situation, all of the unbreached pools could eventually lose their water inventory through evaporation.

Discovery and argument in the licensing proceedings have been limited to the sequence identified by the ASLB. Thus, this report and the licensing proceedings cannot provide new knowledge about other event sequences that might lead to a large, atmospheric release of radioactive material from the Harris pools.

The event sequence identified by the ASLB has been outlined in Section 1. As described by the ASLB, the sequence involves the following stages:[15]

> "(1) a degraded core accident;
> (2) containment failure or bypass;
> (3) loss of all spent fuel cooling and makeup systems;
> (4) extreme radiation doses precluding personnel access;
> (5) inability to restart any pool cooling or makeup systems due to extreme radiation doses;
> (6) loss of most or all pool water through evaporation; and
> (7) initiation of an exothermic oxidation reaction in pools C and D."

Stage (7) addresses only pools C and D because the present licensing proceedings relate only to those pools. However, the behavior of pools A and B during the event sequence is relevant to the initiation of exothermic oxidation reactions in pools C and D, and is therefore addressed in this report.

For the seven-part event sequence, the ASLB asks each party in the licensing proceedings to provide a "best estimate of the overall probability of the sequence".[16] No definition of the term "best estimate" is provided by the ASLB, and that subject is addressed in Section 2.4. The ASLB also states that the parties "should take careful note of any recent developments in the estimation of the probabilities of the individual events in the sequence at issue".[17] That subject is addressed at several points in this report, with a summary discussion in Section 5.

IRSS's analysis of the seven-part event sequence is described in Sections 4.1 through 4.7, and is summarized in Section 4.8. The seven-part event sequence ends with the initiation of exothermic oxidation reactions, and the ASLB does not ask the parties to discuss the outcomes of those reactions. The potential outcomes would, however, be highly significant in an assessment of the environmental impacts of activating pools C and D at Harris.

---

[15] ASLB, 2000, page 13.
[16] ASLB, 2000, page 17.
[17] Ibid.

2.3 Strengths and limitations of PRA

PRA techniques provide the best available methodology for estimating the overall probability of the seven-part event sequence that has been identified by the ASLB. Here, the phrase "PRA techniques" refers to a wide variety of analytic models and procedures which draw upon data from experiments and from practical experience with nuclear facilities. The state of the PRA art, as applied to nuclear reactors, is represented by the NRC's NUREG-1150 study.[18] Work on PRA development has continued since that study was completed, but subsequent PRAs have been less ambitious in their scope.

The application of PRA techniques to the seven-part event sequence breaks new ground. A variety of new issues must be explored, as is evident from the discussion in Section 4. Thus, it is important to recall that the art of nuclear-reactor PRA has been under development for almost three decades. Many person-years of effort and many millions of dollars have been expended to bring the nuclear-reactor PRA art to its present state. Yet, substantial uncertainties remain in the findings of nuclear-reactor PRAs, as discussed below. Thus, one should not expect the initial application of PRA techniques to the seven-part event sequence to yield findings that can be accepted with high confidence.

For any application of PRA techniques, it is important to be aware of the strengths and limitations of PRA. In the following discussion, several perspectives are presented, drawing from experience with nuclear-reactor PRAs. The perspectives presented are from government, industry and independent scientists.

An NRC Staff perspective

In a Reference Document on PRA, the NRC Staff has set forth a number of findings, including the following:[19]

> "• The process of performing PRA studies yields extremely valuable engineering and operational insights regarding the integrated safety performance of nuclear power plants.

---

[18] NRC, 1990.

[19] NRC, 1984, Executive Summary.

• PRA results are useful, provided that more weight is given to the qualitative and relative insights regarding design and operations, rather than the precise absolute magnitude of the numbers generated.

• It must be remembered that most of the uncertainties associated with an issue are inherent to the issue itself rather than artifacts of the PRA analysis. The PRA does tend to identify and highlight these uncertainties, however.

• PRAs are not very useful from a quantitative standpoint for some issues. However, PRAs can still provide useful regulatory insights even for these issues. For example, the risk from sabotage is difficult to quantify due to uncertainty in the frequency of attempted acts and the nature of and likelihood of success for sabotage attempts; however, PRA methods can still provide good qualitative insights with regard to important (vital) plant areas and weaknesses."

A CP&L perspective

Like the NRC Staff, CP&L has recognized that the merits of PRA are found not in its "bottom-line" numerical probability estimates, but in its qualitative insights. A CP&L report contains the following statement about probabilistic safety assessment (PSA), which is another term for PRA:[20]

> "A criticism of the use of PSA in decision making is the presence of uncertainties in the model. There are important points relevant to this criticism. First, while uncertainties may shade the exact meaning of the absolute CDF [core damage frequency] calculated, the relative risks calculated for different accident sequences, or for different plant systems and components, represent the true value of the PSA, and these are less impacted by the existing uncertainties. Second, the alternative to the use of PSA is to base decisions on each individual's assessment of the situation, which can vary considerably depending upon the person's background and biases. PSA provides a logical structural basis for decisions, and provides common ground for discussions relevant to plant safety."

---

[20] CP&L, 1995a, Appendix L – Summary Document (October 1998), page 26.

Other perspectives

Gareth Parry, a senior PRA analyst with the NRC Staff, has made the following statement about uncertainty in PRAs:[21]

> "The models that go to make up a PRA, by contrast with Newtonian Mechanics and QED [quantum electrodynamics], are considerably less well established. Furthermore, since a PRA is used to model very rare events, there can be no experimental verification of its validity. In addition, because of the rare nature of the events being modeled, statistical uncertainties in the estimates of the parameters of the model can be significant. Furthermore, and perhaps of most interest here, there are uncertainties about the impact of physical phenomena taking place during accident scenarios that create differences of opinion about how to model these impacts. Thus, as discussed in more detail in the next section, there are considerable uncertainties associated with creating a PRA model, even at the level of the individual elements of the model."

George Apostolakis, a member of the NRC's Advisory Committee on Reactor Safeguards (ACRS), has commented on the role of opinion in PRAs, as follows:[22]

> "The judgment of analysts is prevalent in PSA. Because the events or phenomena of interest are usually very rare, thus lacking significant statistical or experimental support, the opinions of experts acquire great significance."

The NRC established a committee to review the NUREG-1150 study. That committee agreed on a number of conclusions and recommendations that are relevant here.[23] Among the conclusions was the following statement on effects that were neglected in NUREG-1150:[24]

> "Certain potentially important effects are not explicitly or fully covered: events starting from low power and shutdown modes, sabotage, and aging, which may not be fully covered by current inspection and maintenance programs. Electrical control and actuation circuits were not explicitly covered in the analysis of common-cause failure. Although it is

---

[21] Parry, 1996, page 121.
[22] Apostolakis, 1990, page 1363.
[23] Kouts et al, 1990, pp 71-76.
[24] Ibid, page 73.

> recognized that the impact of "safety culture" and management quality cannot be factored into the PSA at the present time, it is important to bear in mind such impacts as overall decisions are made on plant safety."

Greenpeace International commissioned a study, to which the present author contributed, on the strengths and weaknesses of PRA. The study found that PRA has a number of useful applications, but also important limitations.[25] Among the limitations identified by the study were the following:[26]

> "Even the most "simple" aspect of PRAs (modelling accident sequences taking into account solely internal initiating events, component failures, and human errors of omission) is beset with uncertainties which yield very large error margins. The error margins are still larger when containment behaviour is considered. In many cases, this is compounded by systematic underestimation of accident probabilities. Furthermore, many important contributors are excluded from PRAs: Complicated forms of human error; many forms of unexpected plant defects; unforeseen physical processes; sabotage; and acts of war. Many PRAs even completely exclude external accident initiating events."

Summary

The outlines of a consensus position can be seen in the PRA literature, illustrated by the perspectives set forth above.[27] There appears to be broad agreement on at least six points. First, PRA methodology can provide a useful framework for assessing the hazards posed by a nuclear reactor. Second, the findings of a PRA are most reliable when they address the relative risks posed by particular event sequences or plant systems. Third, estimates of core damage frequency (Level 1 findings) are less reliable than estimates of relative risk, and estimates of the frequency of radioactive releases (Level 2 findings) are still less reliable. Fourth, uncertainties are significant. Fifth, PRAs rely heavily on expert opinion. Sixth, some effects, such as sabotage and degraded standards of plant operation, are not accounted for in contemporary PRAs.

---

[25] Hirsch et al, 1989, pp 3-17.

[26] Ibid, page 16.

[27] In illustration of PRA literature not previously cited in Section 2.3, see: ANS/IEEE, 1983; Bohn et al, 1988; Fragola and Shooman, 1991; Golding et al, 1995; Lochbaum, 2000; NRC, 1997a; NRC, 1997b.

2.4 The concept of a "best estimate"

The ASLB has asked each party to the Harris licensing proceedings to provide a "best estimate" of the overall probability of the seven-part event sequence. To the extent that CP&L and the NRC Staff use PRA methodology to provide that estimate, the estimate will inevitably reflect the limitations of PRA, as set forth above.

The general limitations of PRA, and the particular features of its application in this instance, have five major implications for the provision of a best estimate of sequence probability. First, the estimate will have significant uncertainty, and therefore cannot be meaningfully represented by a single point estimate. Second, the estimate will combine technical analysis with expert opinion, and experience has shown that expert opinion can be incorrect.[28] Third, the estimate will not account for effects (e.g., sabotage, degraded standards of plant operation, unforeseen accident sequences or phenomena, gross errors in design, construction or operation) that are not covered in contemporary PRAs; as a result, the estimate can be at best a minimum value. Fourth, it is impossible to provide an objective estimate for the probability of a future occurrence – such as this event sequence – that is strongly influenced by human behavior. Fifth, the estimate will result from a new application of PRA techniques, and may therefore exhibit misunderstanding of technical issues or unexpected levels of uncertainty and incompleteness.

Thus, there will be no objectively correct estimate. For this event sequence, the best estimate of probability that can be provided is a range of numbers, reflecting a set of assumptions and the judgment of a particular group of people. If such an estimate is to have any value for decision-making purposes, it must be accompanied by a narrative that places the estimate in context. The narrative must explain the calculations and assumptions that underly the estimate, and must clearly identify the factors that limit the estimate's completeness and accuracy.

---

[28] Discussion of the TI-SGTR phenomenon in Section 4.2 shows that expert opinion on this subject, as expressed in NUREG-1150, was incorrect.

3. Scope of IRSS analysis

3.1 Requirements for a comprehensive analysis

A large, atmospheric release of radioactive material from the Harris pools could contaminate a large area of land, thereby creating severe, adverse impacts on affected populations.[29] Developing an understanding of the potential for such an outcome should be a high-priority task. Thus, the ASLB's seven-part event sequence deserves a comprehensive analysis, as do other event sequences that could yield a large release from the pools. It is important to consider the requirements that would need to be satisfied before an analysis could be regarded as comprehensive. The remainder of Section 3.1 discusses those requirements, for each stage of the seven-part event sequence.

A degraded-core accident at the Harris reactor

A comprehensive analysis of the potential for a degraded-core accident would involve the completion of a Level 1 PRA that considers both internal and external accident-initiating events. For both types of initiating event, uncertainties would be propagated through the analysis and reflected in the ultimate findings. This analysis should be conducted according to the present state of the art for Level 1 PRAs; at a minimum, this would reflect the depth and scope of NUREG-1150. The findings would exhibit the strengths and limitations discussed in Section 2.3.

Containment failure or bypass

The analysis of containment failure or bypass should build upon the Level 1 PRA that is described above. This analysis should represent the state of the art for Level 2 PRA, including consideration of uncertainty and variability, but should also have additional features that are required for this application. Specifically, there should be new analysis to investigate the onsite transport and distribution of radioactive material for containment failure or bypass scenarios. Current Level 2 PRAs are not adequate for this purpose because they typically focus on estimating the characteristics of a release to the atmosphere, in order to estimate the characteristics of an atmospheric plume that travels offsite.[30] Little work has

---

[29] Thompson, 1999, Appendix E.

[30] Studies have been performed on the potential for liquid-pathway releases pursuant to degraded-core reactor accidents, but these studies have generally focussed on the potential for the release to travel offsite.

been done to date on the complex issues relating to onsite transport and distribution of radioactive material.

The new analysis should identify all significant pathways whereby radioactive material could leave the containment in liquid, gaseous or particulate form and pass through buildings on the site. The transport and distribution of radioactive material along each pathway should be modeled, accounting for driving forces associated with the degraded-core accident (including steam and flammable gases) and for operation of building ventilation systems in normal or abnormal modes.

In addition, the new analysis should identify pathways whereby radioactive material could leave the containment, enter the external atmosphere, and then enter buildings on the site or be deposited on or around those buildings. For each such pathway, the transport and distribution of radioactive material should be modeled, accounting for factors that can influence the onsite behavior of an atmospheric plume (including building wake effects, rainout, and aerosol agglomeration) and the operation of building ventilation systems in normal or abnormal modes.

Loss of spent fuel pool cooling and makeup

The Level 1 PRA analysis that is described above should be extended, to identify degraded-core sequences that are correlated with interruption of cooling and makeup to the Harris pools. Uncertainty and variability in the correlations should be estimated. Then, the new Level 2 PRA analysis should be extended, to identify correlations between scenarios for onsite distribution of radioactive material and scenarios for interruption of pool cooling and makeup. Again, uncertainty and variability in the correlations should be estimated.

Onsite radiation exposure

The analysis of onsite radiation exposure should characterize the radiation environment at each location of the Harris plant where actions may need to be taken in order to ensure that cooling or makeup is provided to the spent fuel pools. Here, the phrase "radiation environment" refers to gamma dose rates and inventories of radioactive material in the air, in liquids and on surfaces at each

location. The radiation environment should be characterized as a function of time.[31]

Equipment is generally less susceptible to damage by radiation than are humans. However, equipment may need to operate for long time periods (potentially months or years) in order to provide pool cooling or makeup, whereas continuous human presence will not be required at all locations. Thus, the analysis of onsite radiation exposure should consider potential exposure of both humans and equipment.

In parallel with the characterization of the radiation environment throughout the plant, this analysis should characterize other environmental factors that could affect the ability of humans and equipment to perform their functions. These factors include temperature, humidity, concentrations of flammable gases, smoke, flooding, lighting intensity, and air quality (levels of oxygen, carbon dioxide, carbon monoxide, toxic gases and particulates). Each of these factors could be strongly affected by the circumstances associated with a degraded-core reactor accident.

This area of analysis would build upon the extended Level 2 PRA analysis that is described above. For this stage of the event sequence, the analysis would be primarily deterministic, although variability should be accounted for.

Effects of onsite radiation exposure
on plant operation

In the seven-part event sequence, it is postulated that radioactive contamination of the site precludes actions that are needed to restore pool cooling or makeup. The ASLB focusses on actions by personnel, and the precluding of those actions by high radiation doses.[32] A more complete formulation of the problem would consider actions by personnel and equipment, and the potential for those actions to be precluded by the radiation environment and/or other environmental factors (temperature, air quality, etc., as articulated above) that are associated with a degraded-core accident. In a comprehensive analysis, each of these issues would be examined.

---

[31] The characterization should cover a time period of 1 year after initiation of the degraded-core reactor accident.

[32] ASLB, 2000, page 13.

Before analyzing the effects of the radiation environment on personnel actions, one must answer two deceptively simple questions. First, what are the actions that must be taken? Second, what radiation exposure would preclude the taking of those actions?

In examining the actions that must be taken to restore pool cooling or makeup, one would begin by specifying the system functions that are to be activated, and the direct human actions that are needed to activate those functions. For example, an operator may need to be at a particular location, at a particular time, to open a valve. However, that is only part of the picture, because this direct human action would occur in a wider context. Each direct human action must be part of a coherent strategy that seeks to ensure that the fuel pools will remain in a safe state.[33] A command structure, with a functioning communications capability, must be in place to assess the situation, prepare a strategy, and oversee the implementation of that strategy. There must be a functioning capability to measure and predict radiation exposure and to communicate this information, so that the command structure does not send an operator to a location where the radiation exposure would be excessive.

Human actions, at every level of the command structure, would be strongly affected by factors that are associated with the degraded-core reactor accident. People, and the infrastructure that supports their activities, would be affected by the radiation environment, and by the other environmental factors that are mentioned above. There could be high levels of psychological stress and unproductive interactions among individuals (misunderstanding, miscommunication, disputed authority, panic, etc.). It is likely that people would be taking actions for which they are unprepared, and for which there are no pre-established procedures. Errors and unproductive interactions are more likely under such conditions. Intra-plant communications systems could be degraded. The performance of a direct human action (e.g., opening a valve) could be hindered by factors such as flooding, locked doors, locked valves, and lack of lighting.

For this stage of the seven-part event sequence, a comprehensive analysis would identify a range of scenarios whereby pool cooling and makeup might be restored. Each scenario would be characterized in terms of the direct human

---

[33] As one illustration of the need for a coherent strategy, note that there could be situations in which the addition of water to a fuel pool would increase the potential for an exothermic oxidation reaction in the pool. Such a situation could arise if water were lost by evaporation, an exothermic reaction had not yet been initiated, and the fuel was uncovered for most or all of its height.

actions that would be necessary, the infrastructure that would be required to support those actions, the role of the command structure, and the preparations that would have been made prior to the event. Then, the analysis would assess the probability that the scenario could be implemented, taking account of the factors discussed in the two preceding paragraphs.

To perform this probability assessment, one must answer the question: What radiation exposure would preclude the taking of a human action? However, this is not a straightforward technical question. There is a large body of scientific knowledge about the health effects of radiation, over a range of doses.[34] This knowledge shows that a person could perform a needed action (e.g., opening a valve) in a high-radiation environment, and then die or become ill at some later time as a result of his radiation exposure. Thus, the above-stated question raises legal and ethical issues, as well as technical issues.

Loss of pool water by evaporation

If one postulates a loss of cooling and a lack of adequate makeup to the Harris pools, it is a comparatively simple, deterministic task to calculate the loss of water by evaporation. This task could be satisfactorily performed by examining a range of scenarios to show the effects of differing assumptions about heat loading and the presence of gates between pools and canals.

Initiation of exothermic oxidation reactions

For the final stage of the seven-part event sequence, one must assess the potential for a self-sustaining exothermic oxidation reaction to be initiated when the spent fuel is exposed to air. A methodology for performing such an assessment is specified in Appendix H. Currently available methodologies do not meet those specifications.

For a given pool, the potential for initiation of an exothermic reaction will depend upon the rack configuration, the fuel loading pattern, and the decay heat in each fuel assembly. Also, this potential will depend upon the level of water in the pool, and will be greatest when a small amount of water remains in the pool, sufficient to cover the bottom of the racks. A thorough analysis would consider the reduction in water level over time (through evaporation) and the heating up of fuel cladding over time, in order to determine if and when a self-sustaining reaction would be initiated in the cladding in a particular fuel assembly. A

---

[34] See, for example: EPA, 1991; Finch, 1987.

thorough analysis would also consider the implications of providing water makeup that is too little or too late to offset the loss of water by evaporation.

A comprehensive analysis would also consider the potential for a self-sustaining reaction to be propagated within a pool, leading to ignition of fuel whose decay heat is so low that it will not self-ignite in the event of water loss.

3.2 Constraints on the scope of analysis

Section 3.1 sets forth a standard for analysis of the seven-part event sequence. In the present context of the Harris licensing proceedings, there are severe constraints on the scope of the analysis that can be performed.

Each of the parties to this proceeding will provide analysis that has been performed over a period of at most three months.[35] During that period, none of the parties could have conducted a comprehensive analysis that satisfies the requirements set forth in Section 3.1. Experience with the development of PRA techniques shows that decades of effort were needed to bring those techniques to their present level of maturity. Moreover, some of the phenomena that are addressed in nuclear reactor PRAs -- especially at Level 2 -- have been studied for many years but are still not fully understood.[36]

The application of PRA techniques to the seven-part event sequence breaks new ground, as indicated in Section 3.1. In illustration of the evolution of understanding of relevant phenomena, Section 4.7 shows how the NRC Staff has only recently recognized the heat transfer implications of the presence of residual water during evaporative dryout of a pool. Thus, any analysis that is provided now will inevitably have deficiencies in its completeness and accuracy. Moreover, the parties' findings could be difficult to compare. Parties might employ differing assumptions and reach qualitatively or quantitatively differing findings. Also, parties might focus on different aspects of the overall problem.

---

[35] The ASLB asked parties to perform this analysis in its Order of 7 August 2000.

[36] In illustration, the NRC Staff has stated: "The current state of knowledge regarding many aspects of severe accident progression and (albeit to a lesser extent) the state of knowledge regarding containment performance limits is imprecise." (NRC, 1997b, page 3-1).

3.3 IRSS's analytic approach

In light of the constraints described in Section 3.2, IRSS has adopted an analytic approach that operates within these constraints but provides the ASLB with a best estimate of probability, as described in Section 2.4.

IRSS's approach has three major elements. First, IRSS relies where possible on findings by CP&L and the NRC Staff, in order to maximize the area of common ground underlying the parties' findings. Second, IRSS employs scoping calculations at points in the analysis where appropriate findings from deterministic calculations or probabilistic models are not available.[37] Third, IRSS does not attempt to perform the comprehensive analysis that is specified in Section 3.1, but instead analyzes a single scenario for the seven-part event sequence that has been identified by the ASLB.

The third element of this approach deserves further explanation. IRSS analyzes a single scenario not because other scenarios are unimportant, but because a comprehensive analysis of all scenarios cannot be performed, by IRSS or any party, within the constraints that are operative. However, analysis of one scenario can provide the ASLB with a minimum value for the best estimate of the overall probability that the seven-part event sequence will occur. Analysis of a second, independent scenario would yield a probability estimate that can be added to the first, and this process could be repeated for other, independent scenarios.

Sections 4.1 through 4.7 of this report describe IRSS's analysis of the respective stages of a single, selected scenario for the seven-part event sequence. The discussion in these Sections is supported by information presented in Appendices B through H.

4. Analysis of the seven-part event sequence identified by the ASLB

4.1 A degraded-core accident at the Harris reactor

The potential for a degraded-core reactor accident can be assessed using Level 1 PRA analysis. For the Harris reactor CP&L has an ongoing program of Level 1

---

[37] A scoping calculation can provide a bridge between parts of an analysis that are deterministic or that rely on probabilistic modeling. Any scoping calculation must be consistent with physical principles and known phenomena, and must be transparent.

work. The Harris IPE (see Section 2.1, above) is one product of that effort.[38] After completing the IPE, CP&L began work on a probabilistic safety assessment (PSA), and this work continues. During discovery for the Harris license amendment proceedings, CP&L produced a body of documentation on its PSA effort. This material included a nine-part report dated October 1995, together with other documents that are undated or have various dates through 1999, but which appear to be part of a package that can be regarded as an October 1995 version of the PSA.[39] CP&L did not produce any document that provides an integrated description of the Company's PSA work.

Consistent with the approach described in Section 3.3, IRSS sought to base its estimate of the probability of a degraded-core reactor accident on work done by CP&L, supplemented by information developed by the NRC Staff. To that end, IRSS reviewed a body of literature including the IPE, PSA and IPEEE for Harris.[40] The purpose of the review was to identify a selected set of degraded-core accident sequences, and to obtain information related to the probabilities and other characteristics of those sequences. Appendix C provides information relevant to IRSS's selection and characterization of sequences.

Table 1 shows the four degraded-core sequences that IRSS selected for analysis.[41] Each of these sequences was identified and analyzed by CP&L. The sequences have four common properties that are important in the present context. First, they all feature a loss of high-pressure coolant injection. Second, they all involve a loss of feedwater to the steam generators, either at the beginning of the accident or within a few hours. Third, they are all expected to exhibit a failure of the seals in one or more of the three reactor coolant pumps (RCPs) at Harris, causing a loss of coolant from the primary system. Fourth, they all involve a loss of cooling to the Harris fuel pools.

Estimates of the probability of the selected sequences are shown in Table 1. The point estimates of probability were developed by CP&L, except that the probability shown for the TQUB-seismic sequence has been adjusted by IRSS (see Appendix C) to reflect the seismic hazard curves developed at the Lawrence Livermore National Laboratory. CP&L had employed curves developed at the

---

[38] CP&L, 1993.

[39] CP&L, 1995a.

[40] CP&L, 1993; CP&L, 1995a; CP&L, 1995b.

[41] Each of the four sequences in Table 1 actually represents a class of sequences with similar properties. For simplicity of presentation, these classes are discussed here as though they are individual sequences.

Electric Power Research Institute (EPRI). The NRC Staff has stated that either set of curves "is currently considered to be acceptable".[42]

For two sequences, a range of probabilities is shown in Table 1. These ranges are illustrative, and do not represent the output of an uncertainty analysis. They were developed from information provided by CP&L, as explained in Appendix C.

4.2 Containment failure or bypass

Many PRA analyses have shown that the four degraded-core sequences shown in Table 1 will exhibit two characteristics that are significant in the context of containment bypass. First, the pressure in the reactor coolant system will generally remain high, prior to and during the period when the core becomes degraded.[43] Second, the secondary side of the steam generators will dry out, and there will be a significant probability that one or more of the steam generators will become depressurized.

Steam generator tube rupture

Given these conditions, one must consider the potential for containment to be bypassed by temperature-induced steam generator tube rupture (TI-SGTR). In a PWR plant such as Harris, rupture of steam generator tubes will create a direct pathway from the reactor core to the secondary (steam) side of the plant, outside the containment. As shown in Figure 1, safety relief valves (SRVs) and electrohydraulic power-operated relief valves (PORVs) can then provide a direct pathway from the secondary side to the atmosphere.[44] At Harris, the vent stacks for the SRVs and PORVs are located on a roof at the 305 ft level, just outside the containment.

The potential for TI-SGTR was a subject of technical debate when Public Service Company of New Hampshire (PSNH) was seeking an operating license for the Seabrook plant. In that context, an NRC Staff memorandum stated in March 1987:[45]

---

[42] NRC, 1997b, page 5-3.

[43] In these sequences, there is a potential for the reactor coolant system to become depressurized as a result of temperature-induced failure of part of a hot leg or pressurizer line. That potential is accounted for in the discussion here.

[44] For the selected degraded-core sequences, it is likely that a TI-SGTR release to the atmosphere would occur through the SRVs rather than the PORVs.

[45] Lyon, 1987, page 8.

> "We find that the topic of SGTR is in a developing state, with knowledge being rapidly accumulated. Further work is necessary to conclude that SGTR is unlikely under all conditions associated with a severe accident."

In contrast to this cautious statement, a July 1987 report prepared by Karl Fleming and others for PSNH stated:[46]

> "A conservative assessment of the mean frequency of early containment failure or bypass due to ISGTR [equivalent to TI-SGTR] at Seabrook Station is 6×10^{-10} per year. The median corresponding to this mean is 0. Even without any credit for RCS depressurization according to existing or new procedures, the mean frequency of ISGTR is very low, a value of 3×10^{-8} per year."

The intervening years have seen a number of studies and experiments related to the TI-SGTR issue. At times, the NRC Staff has adopted the same confident optimism as the Fleming group. For example, in reviewing the TI-SGTR issue as part of the NUREG-1150 study, a panel of three experts agreed that "the likelihood of an induced SGTR is quite low".[47] However, a subsequent study at Idaho National Engineering Laboratory determined that the NUREG-1150 position on TI-SGTR "was based on expert opinion with little supporting analysis".[48]

Recent studies indicate that TI-SGTR poses a significant hazard.[49] One of the issues that has been recognized as a key determinant of the potential for TI-SGTR is the behavior of the "loop seal" -- a body of water that can remain in a cold leg of the primary circuit between the steam generator and the reactor coolant pump.[50] Figure 2 shows the role of this loop seal.

IRSS has examined the potential for TI-SGTR for the selected degraded-core sequences shown in Table 1, drawing from the findings of NUREG-1570, an NRC Staff study.[51] Appendix D describes IRSS's analysis, whose findings are shown

---

[46] Fleming et al, 1987, page ES-3.
[47] NRC, 1990, Volume 2, page C-66.
[48] Ellison et al, 1996, page 7-6.
[49] Ellison et al, 1996; NRC, 1998.
[50] Ibid.
[51] NRC, 1998.

in Table 2. That table shows that the estimated conditional probability of TI-SGTR, for the selected sequences, is 0.49 (50 percent).

The radioactive release

Having found that the selected degraded-core sequences are accompanied by a significant conditional probability (50 percent) of containment bypass, one must consider the nature of the radioactive release (source term) that would occur through the bypass pathway.

An important point to note is that Harris fuel is experiencing high burnup levels, generally above 45 GW-days/MTHM and often into the mid-50s.[52] It is likely that this trend will continue, leading to burnup levels in the high-50s. This is significant because new source term-related phenomena come into play at high burnup.[53] An NRC Staff report has stated:[54]

> "Recent information has indicated that high burnup fuel, that is, fuel irradiated at levels in excess of about 40 GWD/MTU, may be more prone to failure during design basis reactivity insertion accidents than previously thought. Preliminary indications are that high burnup fuel also may be in a highly fragmented or powdered form, so that failure of the cladding could result in a significant fraction of the fuel itself being released."

For the selected degraded-core sequences, a release through ruptured steam generator tubes would be driven by steam pressure in the primary circuit. The steam already present in the circuit would be supplemented by evaporation of residual water in the circuit and water that is discharged from the accumulators. The resulting flow would carry with it some of the small fuel particles that are characteristic of high-burnup fuel. Also, at certain stages of the release, the flow entering the atmosphere from the SRVs could be comparatively cool and wet.

These and other factors, such as building wake effects, would lead to onsite deposition of some of the radioactive material in the reactor core. This is an area of phenomenology that has received comparatively little exploration, and is characterized by high levels of uncertainty and variability. Appendix D briefly reviews the relevant phenomena, and provides a scoping estimate of onsite

---

[52] Carr, 2000.

[53] See, for example, Schmitz and Papin, 1999.

[54] Soffer et al, 1995, page 14.

deposition. The estimate is that onsite deposition occurs uniformly within a circle 200 meters in radius, centered on the location of the SRV and PORV vent stacks. Figure 3 shows the relationship of this area to the Harris site. The material deposited on this area includes 5% of the tellurium isotopes, 10% of the iodine isotopes and 10% of the cesium isotopes in the Harris reactor core.

4.3 Loss of spent fuel pool cooling and makeup

For each of the selected degraded-core sequences shown in Table 1, the spent fuel pool cooling systems would become inoperative at the beginning of the sequence. This would occur because component cooling water is not available to cool the pool cooling heat exchangers and/or because electrical power is not available to drive the pool cooling pumps.

Normal makeup to the Harris pools is provided from the demineralized water system. Provision of this makeup requires the operation of the pool purification system, and the opening of a manual valve at the 216 ft level of the fuel handling building.[55] During the selected degraded-core sequences, the demineralized water system and the pool purification system may be unavailable.[56] However, the availability of makeup is not relevant to the ASLB's seven-part event sequence until the pools begin to boil. Makeup in that context is addressed in Section 4.5.

4.4 Onsite radiation exposure

Section 4.2, above, provides a scoping estimate of the onsite deposition of radioactive material released to the atmosphere pursuant to a TI-SGTR event at Harris. Using this estimate, IRSS has calculated the external gamma dose that would be received by unshielded persons in the contaminated area. This calculation is described in Appendix E and is summarized in Table 3.

From Table 3 it will be seen that an unshielded person who remained continuously in the contaminated area during the first day after the release would receive a dose of one hundred and ten thousand (110,000) rem, which corresponds to an average dose-rate of 76 rem per minute. A person who remained continuously in this area for a total of seven days would receive a dose of three hundred thousand (300,000) rem. It will be noted that the calculated dose rate declines over time, reflecting the decay of shorter-lived radionuclides.

---

[55] CP&L discovery response of 26 September 2000 to the NRC Staff, pp 27-28.

[56] This would be true, for example, in station blackout sequences.

Radiation exposure inside the control room

Persons inside buildings at the Harris site would be shielded from gamma radiation originating outside the buildings, by the intervening presence of concrete and other materials. In illustration, consider the Harris control room. This room is located at the 305 ft level of the plant, near the SRV and PORV vent stacks that are mentioned in Section 4.2. Plant drawings indicate that the roof of the control room is made of concrete approximately 2 ft (60 cm) thick, with support beams at intervals. Concrete of this thickness would provide significant shielding. A lightweight structure, used for offices, is located above part of the roof of the building where the control room is located. This structure would not provide significant shielding to persons in the control room.

Estimation of the shielding of persons inside buildings must consider photon scattering in the shielding material, together with non-uniformities in the distribution of the deposited radioactive material outside buildings. Also, one must consider the potential for radioactive gases and particles to enter buildings through ventilation systems, leakage across door seals, etc.[57] These factors are discussed in Appendix E, which provides a scoping estimate of the protection factor for persons in the control room. The estimate is that the protection factor (defined here as the whole-body external gamma dose outside the building divided by the whole-body dose inside the building) for the control room would be in the range 100-1,000.

If one applies a protection factor of 100-1,000 to the doses shown in Table 3, one finds that the whole-body dose accumulated by a person remaining continuously in the control room would be 110-1,100 rem during the first day after the release and 300-3,000 rem during a period of seven days after the release. It should be noted that the control room is designed to be isolated (sealed off) if airborne radioactivity is detected in the air intakes, and the design requirements provide for continuous occupancy by the initial crew for a period of 7 days.[58]

---

[57] In illustration, the Harris FSAR indicates that air infiltration into the control room would occur, via door seal leakage and other pathways, at a rate of 140 cfm, given a pressure differential (outside above inside) of 0.125 inches water gauge (CP&L-FSAR, Table 6.4.2-2).

[58] CP&L-FSAR, Section 6.4.

Other aspects of control room habitability & functionality

If the control room were to be isolated, the design intent is that the ventilation system would pressurize the room to 0.125 inches water gauge, thus limiting infiltration of unfiltered air and providing fresh, filtered air to offset the accumulation of carbon dioxide and carbon monoxide. An emergency filtration system would be used to filter the incoming air if airborne radioactivity is present in the air intakes.[59] However, this filtration system could not accommodate the levels of airborne radioactivity in the initial plume from a TI-SGTR release, and may be unable to accommodate the levels that would prevail after the plume has passed.[60] If the emergency filtration system were inadequate, ventilation of the control room would have to be suspended, leading to deteriorating air quality and infiltration of contaminated air.

The continuing habitability of the control room would depend upon supplies of electrical power. Notably, the ventilation system depends upon electrical power, and if fresh air cannot be provided the concentration of carbon dioxide in the control room air is predicted to reach its design maximum (1.0 percent) in 71 hours.[61] Self-contained breathing apparatus is available to control room personnel, but this apparatus has a capacity of only one half hour, with an additional 1-hour supply available in bottles, supplemented by a further 6-hour supply that is apparently located elsewhere in the plant.[62]

Electrical power is also essential to the functionality of the control room. If AC electrical power were unavailable, the control room could continue to perform functions for which DC power from batteries is sufficient, but eventually the batteries would become discharged. Note that the safety-related batteries at Harris are expected to function for only 4 hours if AC power is lost.[63]

Habitability & functionality at other locations

The preceding discussion shows that a degraded-core sequence involving a TI-SGTR release would lead to extreme radiation doses to persons in the control

---

[59] CP&L-FSAR, Section 6.4, Section 9.4.1.

[60] The TI-SGTR release that is discussed here would deposit small particles of radioactive material across the Harris site. Resuspension of these particles could lead to high levels of airborne radioactivity for many days after the initial plume has left the site.

[61] CP&L-FSAR, page 6.4.2-2.

[62] CP&L-FSAR, pp 9.5.1-25 to 9.5.1-26.

[63] CP&L, 1995a, Appendix A.12, page 20.

room. Moreover, the control room would lose its functionality within hours if electrical power were unavailable. The same general outcomes would occur at the technical support center (TSC), the communications room that is located near the control room, and many other locations in the plant. In the auxiliary control room, persons could experience lower gamma radiation doses than in the control room, because the auxiliary control room is one floor lower in the building. However, in other respects the auxiliary control room would experience the same habitability and functionality problems as the control room. Also, the auxiliary control room has limited capabilities. For example, the spent fuel pool cooling pumps cannot be controlled from this location.

4.5 Effects of onsite radiation exposure on plant operation

Section 3.1 of this report sets forth requirements for a comprehensive analysis of, among other matters, the effects of onsite radiation exposure on plant operation. That discussion shows that the feasibility that a person would execute a particular direct action in the Harris plant (e.g., opening a valve), subsequent to a degraded-core accident with containment failure or bypass, must be examined in a wider context. For the action to be feasible, at least three conditions must be satisfied. First, a functioning command structure must be in place, together with its supporting infrastructure (communications systems, capability for predicting and monitoring radiation exposures, etc.), so that the direct action can be planned and overseen. Second, the individual designated to perform the direct action must be able to overcome a variety of potential impediments (psychological stress, misunderstanding and miscommunication among personnel, panic, locked doors and valves, flooding, lack of lighting, lack of ventilation, presence of steam, etc.). Third, the manner in which the designated individual is exposed to potential radiation exposure, and the radiation dose that the person accumulates while performing his functions, must be within permissible limits.

If each of the three conditions were satisfied, then the direct action could be regarded as feasible. More precisely, a comprehensive analysis could estimate the probability that a particular direct action would be taken under a given set of conditions. However, the analysis would not be complete at that point. One must determine if the direct action would achieve its intended result. For example, if the purpose of opening a valve were to supply makeup to a spent fuel pool, but a pump upstream of that valve were inoperative, then opening the valve would not achieve the intended result. PRA techniques have been developed for addressing just this type of problem. This illustrates the need,

explained in Sections 2.1 and 3.1 of this report, to extend the application of PRA into the realm of pool accidents.

Permissible radiation exposure

Appendix F summarizes regulatory limits on radiation exposure. In the context of the ASLB's seven-part event sequence, an appropriate limit would be the NRC occupational dose limit for a "planned special exposure", which is 5 rem for the duration of the special exposure. This limit would be appropriate because the exposure, although it would not arise during routine operations, is foreseen in considerable detail.[64] EPA guidance that is summarized in Appendix F provides for doses above 5 rem in some accident situations, but the EPA's guidance can be regarded as applying to exposures that are not foreseen.

It should be recalled that the purpose here is to estimate the probability that radiation exposure would preclude actions that are needed to restore pool cooling and makeup. As repeatedly stated in this report, PRA methodology can be used to make this estimate. Thus, one must consider how the determination of an appropriate dose limit relates to PRA methodology.

In studying fault trees and event trees, PRA analysts are frequently obliged to consider the factors that determine if a function is, or is not, performed. If the function is performed by an item of equipment, a commonly adopted and conservative position for the PRA analyst is to assume that the equipment will not function if exposed to conditions (e.g., temperature) for which it is not qualified. Sometimes, PRA analysts adopt a nonconservative position. For example, in Level 2 PRA studies analysts often assess the integrity of containment at pressures higher than the design value. To the extent that this nonconservative approach is legitimate, it achieves legitimacy because the performance of the equipment under conditions beyond its design basis can be objectively modeled.

Human response to radiation is a different matter. People can perform functions in a high-radiation environment and become ill or die at a later time. During the 1986 Chernobyl accident, firefighters had just such an experience.[65] Thus, in a PRA context it is appropriate to assume that a person will not perform his functions if his radiation exposure exceeds a normal regulatory limit. The NRC

---

[64] Detailed discussion of this exposure by the parties to the Harris license amendment proceedings demonstrates that the exposure is foreseen.
[65] Linnemann, 1987.

occupational dose limit for a planned special exposure provides an appropriate limit. Specifically, the limit for an individual's dose would be 5 rem during the accident (see Appendix F).

Radiation exposure in the control room and TSC, and its implications

Section 4.4 provides an estimate that the whole-body dose to a person in the Harris control room, after a TI-SGTR release, would be 110-1,100 rem during the first day after the release and 300-3,000 rem during a period of seven days after the release.[66] Note that the Harris FSAR provides for the control room to be isolated after such a release, with continuous occupancy by the initial crew for a period of 7 days.[67] Also note (see Appendix F) that the NRC's General Design Criterion 19 (GDC 19) for nuclear power plants specifies that a person in the control room must not receive a dose exceeding 5 rem during the course of an accident.

The estimated dose in the control room would far exceed 5 rem. Thus, the control-room dose would far exceed two separate limits -- the 5-rem dose allowed by the NRC for a planned special exposure to personnel, and the 5-rem limit specified for the control room by GDC 19. For the purposes of a PRA analysis, the control room must be regarded as becoming nonfunctional very soon after the release occurs. Eventually, radioactive isotopes deposited on the site would decay, dose rates would fall, and the control room could again become functional. The time period leading to that outcome is not specifically estimated here, but would considerably exceed 7 days, the period for which doses are calculated here.

The technical support center would experience a radiation environment similar to that in the control room. It is therefore important to note that the command structure for onsite activities during an emergency at Harris could not function if the control room and the TSC were nonfunctional. Appendix F illustrates the ways in which the command structure depends upon the control room and the TSC, and further detail can be obtained from the Harris emergency plan.[68]

---

[66] For comparison, note that the 95th-percentile whole-body fatal dose is 460 rem (see Appendix F).

[67] CP&L-FSAR, Section 6.4.

[68] CP&L-POM, Volume 1, Part 2, "Emergency Plan"; see especially pages 20-63.

To summarize, onsite contamination from a TI-SGTR release would rapidly render the control room and the TSC nonfunctional for a period considerably exceeding 7 days. As a result, the command structure for onsite activities would be nonfunctional. For the purposes of analyzing the ASLB's seven-part event sequence, the occurrence of the TI-SGTR release would preclude any human action on the Harris site for a period considerably exceeding 7 days. This finding is robust in regard to IRSS's scoping estimate of onsite deposition from a TI-SGTR release (see Section 4.2). That estimate yields a dose inside the control room of 110-1,100 rem during the first day and 300-3,000 rem during the first 7 days. These doses far exceed the permissible dose of 5 rem. Thus, IRSS's estimate of the amount of radioactive material deposited on the site could become much less conservative (i.e., IRSS could assume a smaller release and less onsite deposition) without altering the finding that the command structure would be nonfunctional.

Radiation exposure at other locations on the site

Section 4.4 estimates that onsite contamination from a TI-SGTR release, over the area shown in Figure 3, would expose an unshielded person to a whole-body external gamma dose of 110,000 rem over the first day and 300,000 rem over the first seven days after the release. During the first day, the average dose-rate to an unshielded person would be 76 rem/minute. Note that the 95th-percentile fatal dose (95 percent of an exposed population would die) is 460 rem.[69] Thus, an unshielded person would almost certainly receive a fatal dose after six minutes of exposure.[70]

In this harsh radiation environment, productive activity would be unlikely. For the purposes of the present analysis, it can be assumed that no human function could be performed at any location on the site outside buildings with thick concrete walls, roofs and floors, and the capacity for isolation of the interior atmosphere. The reactor auxiliary building, for example, is such a building.

At certain locations inside the reactor auxiliary building and similar buildings, assuming rapid and complete isolation of ventilation systems and closure of doors, the radiation environment would be much less harsh than in the control room. However, if the command structure were nonfunctional, persons in these locations would receive no instructions, and therefore could not perform any

---

[69] Appendix F; EPA, 1991, page 2-12.
[70] (460/76 = 6.1)

safety functions. Even if they could somehow receive instructions, persons in these locations would have a limited ability to move throughout the plant. Ventilation systems feeding these locations could not be operated. Electrical power would be unavailable (see below). Flooding may have occurred as part of the degraded-core accident sequence.[71] Communication systems may be inoperative. Factors of this kind would severely limit the ability of persons in these locations to perform useful functions, even if appropriately instructed.

Electrical power

Each of the degraded-core sequences shown in Table 1, with the exception of the TQUB-flooding sequence, would involve a loss of AC electrical power at the beginning of the sequence. DC power may be available for a few hours, but would then become unavailable if AC power were not available to charge the batteries.

After a TI-SGTR release, the availability of electrical power would be an important factor in determining the range of options for subsequent actions on the site. Two questions arise. First, if power were unavailable during the degraded-core sequence, would it be restored after the release? Second, if power were available during the degraded-core sequence, would it remain available after the release?

Earlier in Section 4.5 it has been determined that the control room and TSC would become nonfunctional soon after the release, because of their harsh radiation environment. As a result, the command structure for onsite activities would be nonfunctional for a period considerably exceeding 7 days. Therefore, electrical power would remain unavailable or become unavailable for the same period.

As a separate matter, the harsh ex-building (open-air) radiation environment on the site would preclude any ex-building human actions to restore or maintain electrical power. Also, the direct effects of deposited and resuspended radioactive material on electrical equipment (e.g., diesel generators, transformers) bear examination. The implications of these factors for the availability of electrical power require a thorough analysis. Such an analysis could yield a high probability that electrical power would be unavailable at Harris after the release, even if the command structure were functional.

---

[71] Note the TQUB-flooding sequence in Table 1.

Provision of pool cooling and makeup

As pointed out in Section 4.3, pool cooling would become inoperative at the beginning of each of the degraded-core sequences considered here, due to unavailability of component cooling water and/or electrical power. For some sequences, cooling could, in principle, subsequently be restored if electrical power were available after the TI-SGTR release. For other sequences, damage to equipment (e.g., by flooding or a seismic event) would preclude restoration of cooling even if electrical power were available. In either case, the absence of a functioning command structure would directly preclude the provision of pool cooling. The same phenomenon would also indirectly preclude pool cooling by rendering electrical power unavailable.

Given a continuing absence of pool cooling, the prevention of water loss from the pools would require makeup to the pools. If makeup were provided to the pools in a quantity just sufficient to offset evaporation, the pools would continue to boil, leading to high humidity levels in the fuel handling building. A larger makeup flow would lead to overflow from the pools, while a smaller makeup flow would lead to a declining water level. Thus, provision of the correct makeup flow, assuming that flow were available, would require ongoing attention by personnel. However, any human action to provide makeup would be precluded by the lack of a functioning command structure and, as a separate matter, would be precluded or severely impeded by other factors described here.

As explained in Section 4.3, normal makeup to the Harris pools is provided from the demineralized water system. After a TI-SGTR release, that system would lack electrical power and may, in any case, be unavailable due to the harsh radiation environment at its location. This makeup option also requires operation of the pool purification system, which depends upon electrical power.

CP&L has identified six alternate makeup options for which there are operating procedures, and three alternate makeup options for which there are at present no formal procedures.[72] All six of the proceduralized options rely on electrical power, which would not be available after a TI-SGTR release. However, two of these options draw water from the reactor water storage tank (RWST), and water in the upper part of that tank can flow by gravity to the pools if appropriate flow paths are provided. If the RWST were full, it appears that about half of its water inventory could flow by gravity to the pools.[73] According to CP&L, the RWST

---

[72] CP&L discovery response of 26 September 2000 to the NRC Staff, pp 28-32.

[73] This estimate is based upon a viewing of plant drawings.

has a capacity of 490,000 gallons (65,500 cubic feet). Thus, up to about 33,000 cubic feet of water could flow by gravity from the RWST to the pools. For comparison, the normal volume of water in the Harris pools and canals, above the racks, is 132,000 cubic feet.[74] Thus, the availability of gravity flow from the RWST would have a comparatively small effect on the timing of evaporative dryout in the pools.

Two of the three nonproceduralized alternate makeup options identified by CP&L would depend upon electrical power. The third option would direct water to the pools from the fire protection system, which draws water from the Harris lake. The fire protection system has one electrically-driven pump and one diesel-driven pump.[75] As stated above, electrical power would not be available in this situation. The diesel-driven fire pump may be unavailable due to the harsh radiation environment at its location. CP&L has provided no information about the reliability of this pump or the continuity of its fuel supply.

None of the makeup options described above, including normal makeup and the alternate options, would function automatically. Each option would require direct human actions, such as the opening of valves. Thus, even if electrical power were available, the options would not function, because human actions would be precluded.

To summarize, the provision of pool cooling and makeup, after a degraded-core accident with a TI-SGTR release, would be precluded by multiple, overlapping factors. First, the command structure at Harris would be nonfunctional for a period considerably exceeding 7 days, thereby directly precluding any action to establish cooling and makeup. Second, electrical power would be unavailable due to the absence of a functioning command structure, thereby precluding cooling and all makeup options except pumping of water from the Harris lake by the diesel-driven fire pump. Third, electrical power could be rendered unavailable by the harsh radiation environment, even if the command structure were functional. Fourth, the diesel-driven fire pump could be unavailable due to the harsh radiation environment at its location, inherent unreliability, and/or insufficiency of fuel. Fifth, the harsh radiation environment on the site would preclude any ex-building (open-air) human actions on the site. Sixth, a variety of factors would severely inhibit human actions within plant buildings, even if a command structure were to be functional.

---

[74] CP&L discovery response of 7 November 2000 to the NRC Staff, Attachment A.

[75] The fire protection pumps are described in: CP&L-FSAR, pp 9.5.1-21 to 9.5.1-22.

4.6 Loss of pool water by evaporation

An ongoing lack of cooling of the Harris pools would lead to an increase in water temperature, with eventual boiling. If makeup were not provided thereafter, the pools would lose water by evaporation.[76]

Table 4 shows the estimated timing for boiling and dryout of the pools, for five selected scenarios. Four of the scenarios were identified by CP&L, and one by IRSS. The calculations were performed by CP&L or by IRSS using CP&L's data, as explained in Appendix G.

Two main factors determine the calculated times shown in Table 4. One factor is the heat load in the pools. The other factor is the calculation's assumption about the presence or absence of each of the nine removable gates that can be used to separate the fuel pools and canals at Harris.

Scenarios CP&L-1 and CP&L-2 illustrate the significance of gate positions. In scenario CP&L-1, pools A and B are gated off from the main transfer canal, whereas scenario CP&L-2 assumes that gate #1 is removed, allowing pools A and B to communicate with the main transfer canal. As a result, two additional days are required for pools A and B to dry out.

For pools A and B, the scenario identified by IRSS is more conservative than the scenarios identified by CP&L, but equally realistic. The IRSS scenario assumes that the Harris reactor has recently been restarted after a refueling outage, that the newly discharged fuel is in pool A, and that pool A is gated off by inserting gate #4. This gate arrangement would be used, for example, if maintenance work were being done on equipment in the Unit 1/4 fuel transfer canal.

Time to dryout versus time period for which pool cooling and makeup would be precluded

The first four scenarios shown in Table 4 would lead to a loss of water down to the top of the racks in times ranging from 4.7 days (IRSS scenario for pool A) to 10.2 days (pools C & D with a 15.6 MBTU/hr heat load). Thus, the timing of each of these scenarios is consistent with the time period for which pool cooling and makeup would be precluded by radioactive contamination of the site pursuant to a degraded-core accident with a TI-SGTR release (see Sections 4.4 and 4.5). In

---

[76] Water would also be lost if some makeup occurred, but not enough to offset evaporative loss.

other words, restoration of pool cooling and makeup would not be expected prior to uncovering of fuel assemblies.

For the fifth scenario shown in Table 4 (pool C with a 1 MBTU/hr heat load), a period of 116 days would be required for the fuel assemblies to become uncovered. The analysis described in Sections 4.4 and 4.5 has not demonstrated that pool cooling and makeup would be precluded for such a period.

However, the initiation of exothermic oxidation reactions in pools A and B would liberate radioactive material from those pools, and thereby supplement the radioactive contamination of the site that arose from the TI-SGTR release. In this manner, cooling and makeup to pools C and D could be precluded for a much longer time period.

This situation is examined in Appendix G, which develops a scoping estimate for contamination of the Harris site pursuant to a release from pools A and B. The estimate is that 5% of the pools' inventory of cesium-137 would be deposited uniformly within a circle 200 meters in radius. This circle would be similar to the one shown in Figure 3, but would be centered on pools A and B. The whole-body gamma dose to an unshielded person who remained continuously within this circle for one day would be 6,700 rem. The dose accumulated during a subsequent day of exposure would decline slowly with time, due to weathering effects and the comparatively slow decay of cesium-137 (half-life = 30 years).

A site-wide gamma dose field of 6,700 rem per day would be sufficient to preclude restoration of cooling and makeup to pools C and D. Other characteristics of the fuel handling building at that time would also preclude cooling and makeup. It is likely that a hydrogen explosion would have occurred within the building during the initial zirconium-steam reaction phase of the exothermic oxidation reaction in pools A and B, causing damage to structures and equipment. This reaction phase and any subsequent air-zirconium reaction phase would have deposited radioactive material, including but not limited to cesium-137, within and around the building. Residual solid material in pools A and B would emit gamma radiation.

4.7 Exothermic oxidation reactions in the Harris pools

The preceding discussion has shown that a TI-SGTR release at Harris would lead to drying out of all spent fuel pools that were in use. The next step in the analysis is to determine the conditional probability that drying out of the pools would lead to initiation of exothermic oxidation reactions.

A previous report by IRSS reviewed the state of understanding of this issue, as of early 1999.[77] Since that time, new work on the issue has been done by the NRC Staff. Section 5 shows how understanding of the issue has evolved since the late 1970s. Appendix H provides a brief review of the factors that would determine the probability that dryout would lead to exothermic oxidation reactions in the Harris pools.

Partial drainage versus total drainage

A key point in IRSS's previous report was that partial drainage would be a more serious condition than total drainage, because convective circulation of air would be suppressed.[78] This point was disputed by the NRC Staff. However, in recent testimony to the ACRS, the Staff conceded that IRSS has been correct. In describing the Staff's recent analysis of fuel heatup in situations of obstructed flow (which would encompass the partial drainage case), a Staff representative stated: "Obstructed air flow potential precludes generic decay time when "significant release is no longer possible"".[79] In other words, the Staff could not identify an age at which spent fuel in a high-density pool would have such a low level of decay heat that its cladding would not ignite if the fuel is exposed to air and convective flow of air is suppressed (e.g., by residual water).

For a scenario in which water is lost by evaporation, leading to progressive uncovering of fuel, one must compare the timing of water loss with the timing of fuel heatup. If water were completely lost before the fuel heated up to its ignition (runaway) temperature, then the partial drainage effect would not be significant.

Appendix H shows that this outcome would not occur at Harris. For pools A and B, the scenario timing shown in Table 4 would allow the younger fuel assemblies in these pools to heat up to their ignition temperature during evaporative dryout. For pools C and D, the timing would allow 5-year-old fuel assemblies (and older fuel assemblies, for the slower-developing scenarios) to heat up to their ignition temperature.[80] This finding is significant because CP&L has stated that its policy would be to not place fuel younger than 5 years in pools

---

[77] Thompson, 1999, Appendix D.

[78] Ibid, page D-8.

[79] Collins, 2000.

[80] Ignition would occur either during evaporative dryout – initiating a zirconium-steam reaction – or immediately after dryout – initiating a zirconium-air reaction (see Appendix H).

C and D at Harris. It should be noted, however, that the Technical Specifications proposed by CP&L for pools C and D do not constrain the age of the fuel that can be placed in these pools.[81]

CP&L agrees that 5-year-old fuel could be present in pools A and D. Thus, it must be assumed that evaporative dryout would lead to ignition of fuel in pools C and D.[82]

4.8 Summary

Sections 4.1 through 4.7 have established the basis for an estimate of the probability that the ASLB's seven-part event sequence will proceed to completion — namely, that an exothermic oxidation reaction will be initiated in pools C and D. The estimate provided here is a "best estimate" according to the specifications set forth in Section 2.4. Moreover, the estimate is for one scenario for the seven-part event sequence. The scenario involves one of the selected degraded-core reactor accident sequences shown in Table 1, followed by a containment bypass release via temperature-induced steam generator tube rupture. Other scenarios could be analyzed.[83] Thus, the estimate provided here is a minimum value for the best estimate of the overall probability of the seven-part event sequence.

Table 5 shows this minimum-value best estimate, and the steps by which it was obtained. The first step was to take, from Table 1, the point estimate for the annual probability of occurrence of the selected degraded-core sequences. A range is shown in Table 5 for this probability; this range was developed by IRSS from the probability ranges shown in Table 1 using a procedure that is described in Appendix C. Note that the probability ranges shown in Tables 1 and 5 are illustrative, and do not represent the output of an uncertainty analysis.

The remaining six steps shown in Table 5 involve the application of conditional probabilities. These are probabilities that a particular outcome occurs, given that a preceding outcome in the sequence has occurred. All of the conditional probabilities in Table 5 are one or zero, except the conditional probability of containment bypass, which is 50 percent for the selected degraded core sequences.

---

[81] CP&L, 1998, Enclosure 5.

[82] A runaway reaction would begin first in the youngest fuel in the pools, and would then propagate to older fuel.

[83] Note the discussion in Section 5 about the cladding-fire probability estimate from NUREG-1353.

IRSS's analysis concludes with a finding that a minimum value for the best estimate of the overall probability of completion of the ASLB's seven-part event sequence is 1.6×10^{-5} per yr (point estimate) with a range from 0.2×10^{-5} to 1.2×10^{-4} per yr. The range is illustrative, and does not represent the output of an uncertainty analysis. At present, there is no technical basis for providing such an analysis. The point estimate relies upon CP&L and NRC Staff findings for degraded-core probability and the conditional probability of containment bypass, respectively, together with IRSS findings for parts of the sequence that occur after containment bypass.

As pointed out in Section 2.4, a best estimate of this kind must not be viewed as an objectively correct number. The estimate has meaning only in the context of a narrative. This report provides such a narrative. It describes the difficulties that arise in developing an estimate, and the limitations that are associated with the estimate. For example, the estimate does not account for acts of malice, degraded standards of plant operation, or gross errors in design, construction or operation.

5. Evolution of knowledge about potential releases from fuel pools

The potential for exothermic oxidation reactions to occur in a high-density spent fuel pool, leading to a large, atmospheric release of radioactive material, was known in the late 1970s. An initial analysis of this issue was performed by Sandia Laboratories for the NRC Staff and published in 1979.[84] Independently, this author analyzed the same issue; his analysis identified the role of residual water in suppressing convective heat transfer during evaporative dryout.[85]

The state of technical understanding, as of early 1999, of the potential for oxidation reactions in pools was reviewed in a previous IRSS report.[86] That review found that the quality of analysis in studies performed by and for the NRC Staff had deteriorated after publication of the Sandia Laboratories report in 1979. These studies always assumed a total, instantaneous loss of water, which is an unrealistic, nonconservative assumption. Also, when these studies addressed the potential for propagation of exothermic reactions from younger to older fuel

---

[84] Benjamin et al, 1979.

[85] Thompson et al, 1979.

[86] Thompson, 1999, Appendix D.

assemblies, they failed to consider the heat transfer implications of relocation of fuel and rack materials.[87]

NUREG-1353

The ASLB has asked parties to the Harris licensing proceedings to "take careful note of any recent developments in the estimation of the probabilities of the individual elements in the sequence at issue".[88] Specifically, the ASLB has asked parties to comment upon the current relevance of findings in the generic NRC Staff study NUREG-1353.[89]

In NUREG-1353, the following statement is made:[90]

> "The probability of a Zircaloy cladding fire, resulting from the loss of water from the spent fuel pool, is estimated to have a mean value of 2×10^{-6} per reactor year for either the PWR or the BWR spent fuel pool. The seismic event contributes over 90% of the PWR spent fuel damage probability, and nearly 95% for the BWR."

NUREG-1353 did not consider the seven-part event sequence that is examined in this report. That is, it did not consider the potential for a degraded-core reactor accident to initiate a pool accident. Thus, the NUREG-1353 probability estimate of 2×10^{-6} per [reactor] year can be added to the IRSS estimate of 1.6×10^{-5} per year which is shown in Table 5. This example illustrates the role of IRSS's probability estimate as a minimum estimate.

Another statement made in NUREG-1353 was:[91]

> "The conditional probability of a Zircaloy cladding fire given a complete loss of water was found to be 1.0 for PWRs and 0.25 for BWRs. The PWR value is based on the use of high density storage racks and the BWR value is selected based on the use of directional storage racks, with the channel box in place."

---

[87] Following initiation of exothermic reactions in a rack cell, fuel and rack materials from that cell would be relocated to the base of the pool. In their relocated positions, these materials would inhibit convective flow across the base of the pool and would also directly contribute heat to fuel assemblies in nearby cells. These effects would cause propagation of exothermic reactions.

[88] ASLB, 2000, page 17.

[89] Throm, 1989.

[90] Ibid, page ES-3.

[91] Ibid, page ES-2.

The analysis underlying this statement exhibits the deficiencies that, as stated in earlier paragraphs in Section 5, were characteristic of pool accident studies performed by and for the NRC Staff prior to 1999. Also, the pool conditions assumed in NUREG-1353 are not representative of the conditions (rack configuration and fuel loading) that CP&L seeks to employ at Harris pools C and D.[92]

NRC Staff studies published after February 1999

Since February 1999, when IRSS previously reviewed this field, the NRC Staff has completed additional studies related to the potential for exothermic oxidation reactions in fuel pools. Much of this work has focussed on pools at decommissioning plants. In February 2000 the Staff published a draft study on the risk posed by such pools.[93] That study was the subject of two recent letters from the ACRS to the NRC Commissioners.[94] Publication of a new version of the study is anticipated.

The February 2000 study continued the previous pattern of NRC Staff studies in that it did not address the heat transfer implications of partial drainage or the relocation of fuel and rack materials. A welcome feature of the study, however, was that it openly acknowledged many of the of the limitations of previous and then-current analyses related to the potential for exothermic reactions in pools.[95] Other limitations of these analyses have been pointed out by the ACRS.[96]

As pointed out in Section 4.7, the NRC Staff has recently recognized, in testimony to the ACRS, the heat transfer implications of obstructed air flow if water is lost from a high-density fuel pool. To date, the Staff has not published its analysis.

---

[92] The pool conditions assumed in NUREG-1353 can be seen in Table 4.5.1 of that study (Throm, 1989, page 4-11).
[93] NRC, 2000.
[94] Powers, 2000a; Powers, 2000b.
[95] NRC, 2000, Appendix 1.
[96] Powers, 2000a; Powers, 2000b.

Factors accounted for in IRSS findings

The strengths and limitations of relevant published studies and commentaries, as cited in this report, have been accounted for in the IRSS findings presented in Section 4.7, above.

6. Assessing the environmental impacts of high-density fuel pools

The ASLB has asked parties to the Harris licensing proceedings to comment on the overall scope of the environmental impact analysis that the NRC Staff would be required to prepare, if the Board required such an analysis.[97] The Board's question primarily raises legal issues, which are not addressed here. Instead, IRSS provides some technical information and perspectives that bear upon the question.

Boundaries of analysis

A nuclear reactor, such as the Harris reactor, creates a variety of environmental impacts during its construction, operation and decommissioning phases. One of those impacts is to discharge spent fuel at regular intervals. If the spent fuel were immediately taken to a distant place, then the reactor would not influence the fuel and vice versa. There would be no further connection between the impacts of the reactor and the impacts of the spent fuel.

For the high-density spent fuel pools at Harris, the situation is different. A severe accident that begins in the reactor could have a major influence on the pools, as discussed in this report. Similarly, a severe accident that begins in one of the pools could have a major influence on the reactor. Thus, in the context of severe accidents, the reactor and the pools must be considered as a single system. A related point is that all four pools at Harris must be considered together, because the pools can influence each other during severe accidents, as discussed in Section 4.6.

The importance of severe accidents

In a previous report, IRSS examined the consequences of a severe accident at the Harris pools.[98] That report determined that 70 million Curies of cesium-137 could be released to the atmosphere from the Harris pools if all fuel aged up to 9

---

[97] ASLB, 2000, page 17.

[98] Thompson, 1999, Appendix E.

years were to undergo exothermic oxidation reactions. The NRC Staff has now implicitly agreed that fuel of this age could undergo exothermic reactions if water were to evaporate from the pools.[99] A release of 70 million Curies of cesium-137 could contaminate an area the size of North Carolina to such a degree that the whole-body groundshine dose within that area would exceed 10 rem over 30 years of exposure.[100]

Thus, the probabilities and consequences of severe accidents must be assessed in an environmental impact analysis for the Harris pools. As stated above, severe accidents must be examined by considering all four pools and the reactor as a single system. Any lesser approach would not capture all of the severe accident impacts of the Harris pools.

Alternatives

An environmental impact analysis for the Harris pools should consider alternative options. In studying those alternatives, the analysis should consider the extent to which the probabilities and consequences of severe accidents could be dramatically reduced. Storing spent fuel using dry storage technology offers the prospect of dramatic reductions in both probabilities and consequences.

Standard of analysis

Section 3.1 of this report sets forth requirements for a comprehensive analysis of the ASLB's seven-part event sequence. Those requirements provide a standard that should apply to all aspects of an analysis of the severe accident impacts of the Harris pools, in an environmental impact statement.

---

[99] The Staff has stated that consideration of obstructed air flow precludes the identification of a decay time (e.g., 9 years) when "significant release is no longer possible" (Collins, 2000). Air flow could be obstructed by residual water (during pool dryout) or by relocated fuel or rack material (after dryout).

[100] Thompson, 1999, Appendix E.

EACH ACCIDENT SEQUENCE SHOWN HERE INVOLVES:

- **Loss of high-pressure coolant injection**
- **Loss of feedwater to steam generators**
- **Reactor coolant pump (RCP) seal failure**
- **Loss of spent fuel pool cooling**

Sequence	Probability (per year)	
	Point Estimate	Range
TQUB-seismic	1.6×10^{-5}	1.6×10^{-6} to 1.6×10^{-4}
TQUB-flooding	0.5×10^{-5}	not available
TQUB-loss of nonsafety DC power	0.2×10^{-5}	not available
SBO (station blackout)	0.8×10^{-5}	0.1×10^{-5} to 4.5×10^{-5}
	3.1×10^{-5}	not available

Notes

(a) Appendix C provides background information for this table.
(b) Probability estimates shown here are from CP&L, except that the CP&L point estimate of probability for the TQUB-seismic sequence has been adjusted to reflect the 1993 Livermore seismic hazard curves (NUREG-1488).
(c) For the TQUB-seismic and TQUB-flooding sequences, all feedwater is lost at the beginning of the sequence, whereas for the other two sequences auxiliary feedwater may be available for up to 4 hours.

TABLE 1

ESTIMATED PROBABILITY OF A DEGRADED-CORE ACCIDENT AT HARRIS, SELECTED SEQUENCES

EACH ACCIDENT SEQUENCE REPRESENTED HERE INVOLVES:

- **Loss of high-pressure coolant injection**
- **Loss of feedwater to steam generators**
- **Reactor coolant pump (RCP) seal failure**
- **Loss of spent fuel pool cooling**

Steam Generator Secondary-side Status	Conditional Probability		
	Cond. Prob. of SG Status	Cond. Prob. of TI-SGTR, per SG Status	Cond. Prob. of TI-SGTR
None depressurized	0.22	0.14	0.03
One depressurized	0.43	0.40	0.17
Two depressurized	0.18	0.59	0.11
Three depressurized	0.18	1.0	0.18
All conditions	1.0	NA	0.49

Notes

(a) Appendix D provides background information for this table.
(b) Conditional probability estimates shown here are from generic analysis by the NRC Staff (NUREG-1570), except that the Staff's conditional probability of a depressurized status for all SGs is here divided equally between the 2-depressurized and 3-depressurized cases.

TABLE 2

ESTIMATED PROBABILITY OF TEMPERATURE-INDUCED STEAM GENERATOR TUBE RUPTURE (TI-SGTR) FOR SELECTED DEGRADED-CORE ACCIDENT SEQUENCES AT HARRIS

ESTIMATES SHOWN ARE WHOLE-BODY GAMMA DOSES TO UNSHIELDED PERSONS, ARISING FROM RADIONUCLIDES DEPOSITED ON GROUND OR OTHER SURFACES, ASSUMING CONTINUOUS EXPOSURE OVER THE TIME PERIOD SHOWN

Deposited Radionuclides	Accumulated Dose (rem)	
	1 Day	7 Days
Telluriums	3.1×10^4	1.4×10^5
Iodines	7.0×10^4	1.3×10^5
Cesiums	5.0×10^3	3.3×10^4
	1.1×10^5	3.0×10^5

Notes

(a) Appendix E provides background information for this table.
(b) This estimate assumes uniform deposition, within a 200 meter-radius circle, of 5% of the tellurium isotopes, 10% of the iodine isotopes and 10% of the cesium isotopes in the Harris reactor core.
(c) The methodology used here for dose calculation is taken from WASH-1400 (NRC, 1975).

TABLE 3

ESTIMATED ONSITE GAMMA DOSE AT HARRIS FOLLOWING A DEGRADED-CORE ACCIDENT WITH CONTAINMENT BYPASS AS A RESULT OF SGTR

TIMES SHOWN ARE NUMBER OF DAYS

Scenario	Time to Begin Boiling	Additional Time for Water Level to Reach Top of Racks	Additional Time for Water Level to Reach Base of Pool	Total Time
Pools A & B (CP&L-1)	0.9	5.2	1.1	7.2
Pools A & B (CP&L-2)	0.9	7.2	1.1	9.2
Pool A (IRSS)	0.7	4.0	1.2	5.9
Pools C & D (15.6 MBTU/hr)	1.4	8.8	1.4	11.6
Pool C (1 MBTU/hr)	16.0	100.0	14.8	130.8

Notes

(a) Appendix G provides background information for this table.
(b) Scenarios CP&L-1 and CP&L-2 are "beginning of cycle" scenarios identified by CP&L. Scenario CP&L-2 differs from CP&L-1 by assuming that the water to be boiled away includes the water inventory in the main fuel transfer canal.
(c) The IRSS scenario for pool A assumes that this pool is gated off, that it contains one-third of a Harris core about 30 days after shutdown, and that pool A's share of the pool A&B base heat load is proportional to storage capacity.

TABLE 4

ESTIMATED TIMING FOR BOILING AND DRYOUT OF HARRIS FUEL POOLS, SELECTED SCENARIOS

Stage of Sequence	Probability
(1) Degraded-core accident (Occurrence of selected sequences)	Point Est. Prob. = 3.1×10^{-5} per yr Range = 0.4×10^{-5} to 2.4×10^{-4} per yr
(2) Containment failure or bypass (For selected degraded-core sequences)	Conditional Prob. = 0.5
(3) Loss of spent fuel cooling and makeup (For selected degraded-core sequences)	Conditional Prob. = 1.0
(4) Extreme radiation environment onsite (Assuming containment bypass)	Conditional Prob. = 1.0
(5) Restart of pool cooling or makeup (Assuming extreme radiation env.)	Conditional Prob. = zero
(6) Loss of pool water by evaporation (Assuming no restart of cooling or makeup)	Conditional Prob. = 1.0
(7) Initiation of exothermic oxidation reaction in pools C and D (Assuming loss of water)	Conditional Prob. = 1.0
BEST ESTIMATE OF OVERALL PROB. OF INITIATION OF EXO. OXIDATION REACTION IN POOLS C & D (For selected degraded-core sequences)	Point Est. Prob. = 1.6×10^{-5} per yr Range = 0.2×10^{-5} to 1.2×10^{-4} per yr

Note

Section 4.8 provides background information for this table.

TABLE 5

ELEMENTS OF A MINIMUM VALUE FOR THE BEST ESTIMATE OF THE OVERALL PROBABILITY OF THE SEVEN-PART EVENT SEQUENCE IDENTIFIED BY THE ASLB

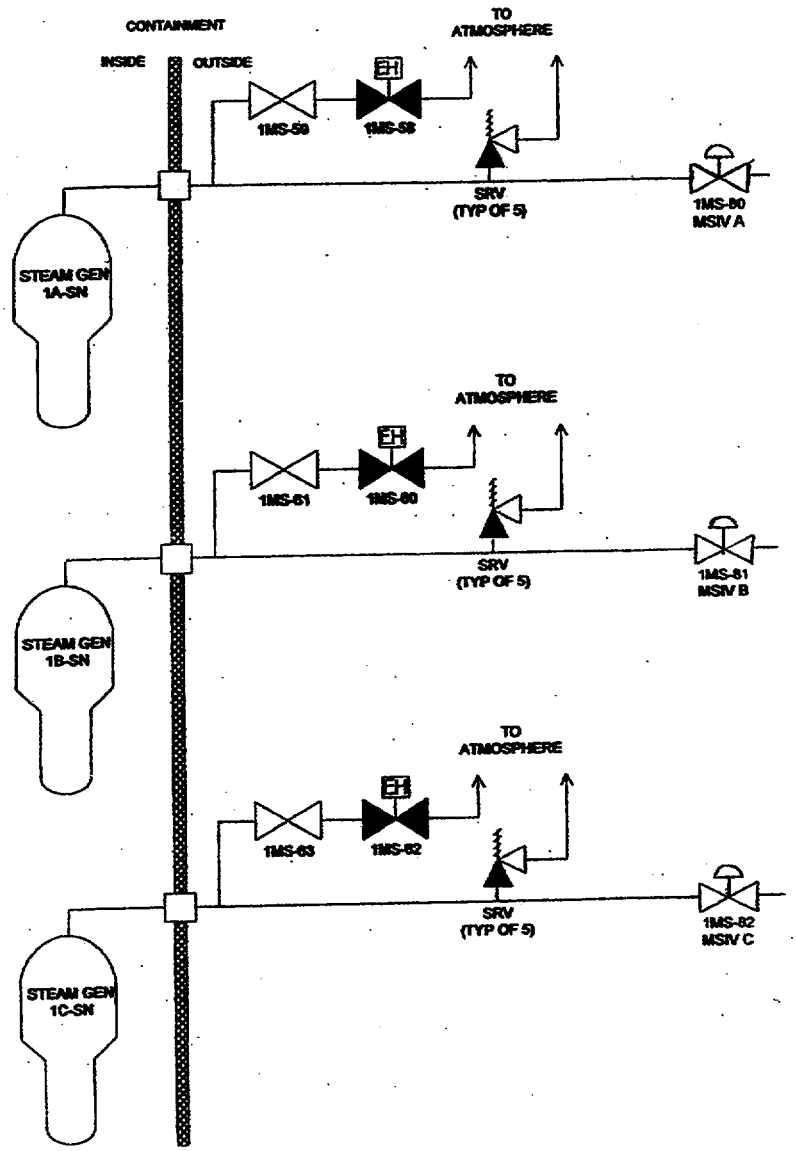

FIGURE 1

SCHEMATIC VIEW OF POTENTIAL CONTAINMENT BYPASS PATHWAY FROM STEAM GENERATORS TO ATMOSPHERE, VIA SRVs and PORVs
(Adapted from CP&L, 1993, page 3-126)

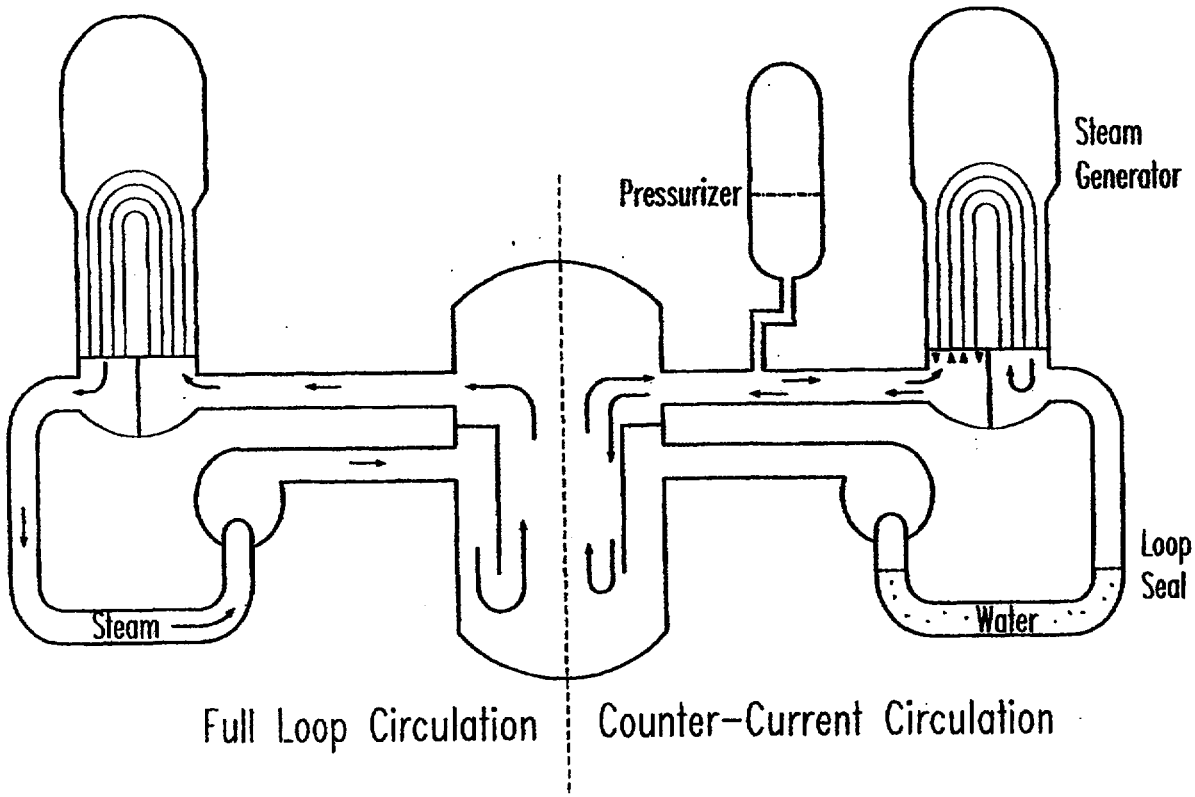

FIGURE 2

SCHEMATIC VIEW OF REACTOR COOLANT SYSTEM, SHOWING NATURAL CIRCULATION FLOWS DURING A HIGH-PRESSURE DEGRADED-CORE ACCIDENT SEQUENCE
(Adapted from NRC, 1998, page 3-21)

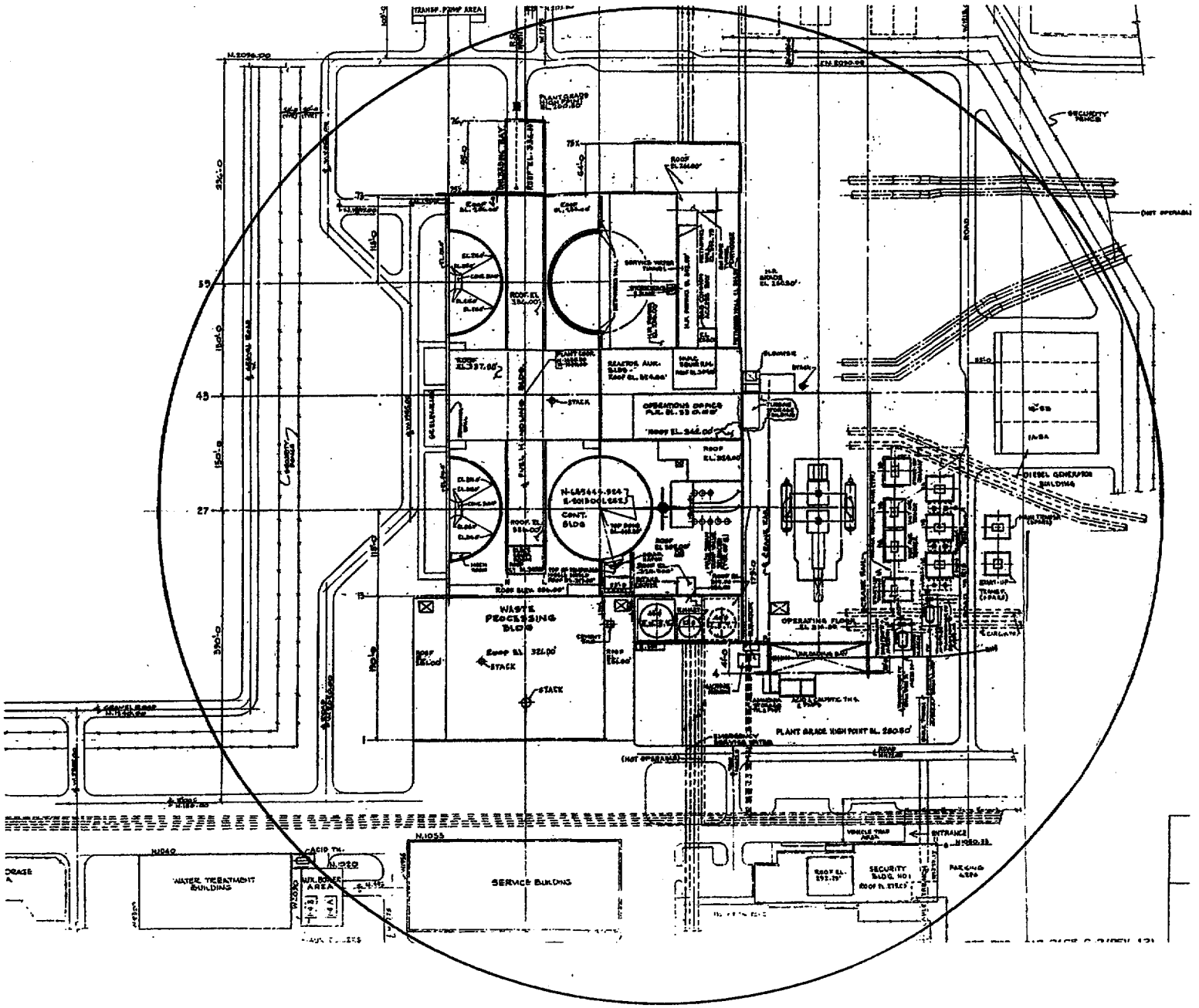

FIGURE 3

AREA OF DEPOSITION USED FOR ESTIMATE OF EXTERNAL RADIATION ENVIRONMENT AT THE HARRIS SITE
(Adapted from CP&L-FSAR, Figure 1.2.2-2)

THE POTENTIAL FOR A LARGE ATMOSPHERIC RELEASE
OF RADIOACTIVE MATERIAL FROM SPENT FUEL POOLS
AT THE HARRIS NUCLEAR POWER PLANT:
The Case of a Pool Release Initiated by a Severe Reactor Accident

A report by IRSS
20 November 2000

APPENDIX A – Bibliography

Note: Documents marked with an asterisk * are attached in relevant portion as exhibits to this report.

*(ACRS, 2000)
Transcript of 477th Meeting of NRC's Advisory Committee on Reactor Safeguards, November 2, 2000

*(Albrecht, 1979)
Ernst Albrecht (Minister-President of Lower Saxony), Declaration of the State Government, Lower Saxony, West Germany, concerning the proposed nuclear fuel center at Gorleben, 16 May 1979. (Note: This document, an English translation of a statement delivered in German, was bound into the Report on the Gorleben Internation Review, Chapter 3, Potential Accidents and Their Effects. *See* Thompson et al, 1979.)

(ANS/IEEE, 1983)
American Nuclear Society and Institute of Electrical and Electronics Engineers, PRA Procedures Guide, NUREG/CR-2300 (2 volumes) (Washington, DC: US Nuclear Regulatory Commission, January 1983).

*(Apostolakis, 1990)
George Apostolakis, "The Concept of Probability in Safety Assessments of Technological Systems", Science, Volume 250, 7 December 1990, pp 1359-1364.

(ASLB, 2000)
Atomic Safety and Licensing Board, Docket No. 50-400-LA, ASLBP No. 99-762-02-LA, Memorandum and Order (Ruling on Late-Filed Environmental Contentions), 7 August 2000.

*(Barker, 1982)
C D Barker, A Virtual Source Model for Building Wake Dispersion in Nuclear Safety Calculations (United Kingdom: Central Electricity Generating Board, March 1982).

(Bayless, 1988)
P D Bayless, Analyses of Natural Circulation During a Surry Station Blackout Using SCDAP/RELAP5, NUREG/CR-5214 (Washington, DC: US Nuclear Regulatory Commission, October 1988).

(Benjamin et al, 1979)
Allan S Benjamin and 3 other authors, Spent Fuel Heatup Following Loss of Water During Storage, NUREG/CR-0649 (Washington, DC: US Nuclear Regulatory Commission, March 1979).

(Beyea, 1979)
Jan Beyea, "The Effects of Releases to the Atmosphere of Radioactivity from Hypothetical Large-Scale Accidents at the Proposed Gorleben Waste Treatment Facility", in Chapter 3 of Report of the Gorleben International Review, submitted (in German) to the Government of Lower Saxony, March 1979.

(Bohn et al, 1988)
Michael P Bohn and 2 other authors, Approaches to Uncertainty Analysis in Probabilistic Risk Assessment, NUREG/CR-4836 (Washington, DC: US Nuclear Regulatory Commission, January 1988).

(Bottomley et al, 2000)
P D W Bottomley and 4 other authors, "Examination of melted fuel rods and released core material from the first Phebus-FP reactor accident experiment", Journal of Nuclear Materials, Volume 278, 2000, pp 136-48.

(Boyd, 2000)
C F Boyd, Predictions of Spent Fuel Heatup After a Complete Loss of Spent Fuel Pool Coolant, NUREG-1726 (Washington, DC: US Nuclear Regulatory Commission, June 2000).

(Budnitz et al, 1997)
R J Budnitz and 6 other authors, Recommendations for Probabilistic Seismic Hazard Analysis: Guidance on Uncertainty and Use of Experts, NUREG/CR-

6372 (2 volumes) (Washington, DC: US Nuclear Regulatory Commission, April 1997).

(Burke et al, 1982)
Richard P Burke and 2 other authors, In-Plant Considerations for Optimal Offsite Response to Reactor Accidents, NUREG/CR-2925, (Washington, DC: US Nuclear Regulatory Commission, November 1982).

(Carr, 2000)
Steven Carr (CP&L), letter of 12 October 2000 to Gordon Thompson (IRSS), providing data on spent fuel stored in pools A and B at the Harris plant.

(Chen, 1993)
John T Chen, "Consideration of external events in the individual plant examination program", Nuclear Engineering and Design, Volume 142, 1993, pp 231-237.

*(Collins, 2000)
Timothy E Collins (NRC Staff), "Spent Fuel Pool Accident Risk Study", viewgraphs for presentations to Advisory Committee on Reactor Safeguards, 18 October 2000 and 2 November 2000.

*(CP&L-FSAR)
Carolina Power and Light Company, Shearon Harris Nuclear Power Plant, Final Safety Analysis Report (excerpts of various volumes).

(CP&L-POM)
Carolina Power and Light Company, Shearon Harris Nuclear Power Plant, Plant Operating Manual (excerpts of various volumes).

(CP&L, 1998)
Carolina Power and Light Company, Shearon Harris Nuclear Power Plant, Docket No. 50-400/License No. NPF-63, Request for License Amendment, Spent Fuel Storage (New Hill, NC: CP&L, 23 December 1998).

*(CP&L, 1995a)
Carolina Power & Light Company, Shearon Harris Nuclear Power Plant, Probabilistic Safety Assessment, Revision 1, October 1995. (excerpts) (Note: During discovery in the Harris license amendment proceedings, CP&L produced a body of documentation on its PSA effort. This material included a nine-page report dated October 1995, together with other documents that are undated or

have various dates through 1999, but which appear to be part of a package that can be regarded as an October 1995 version of the PSA.)

(CP&L, 1995b)
Carolina Power & Light Company, Shearon Harris Nuclear Power Plant, Unit No. 1: Individual Plant Examination for External Events Submittal, June 1995.

(CP&L, 1993)
Carolina Power & Light Company, Shearon Harris Nuclear Power Plant, Unit No. 1: Individual Plant Examination Submittal, August 1993.

(Cramond and Spulak, 1981)
Wallis R Cramond and Robert G Spulak, Analysis of Nuclear Power Plant Systems Containing Radioactivity in a Core Damage Accident, NUREG/CR-2270 (Washington, DC: US Nuclear Regulatory Commission, November 1981).

(Darby et al, 1995)
John L Darby and 2 editors, Shearon Harris: Technical Evaluation Report on the Individual Plant Examination Front End Analysis (location unknown: Science and Engineering Associates, 16 June 1995).

(Diercks et al, 1999)
D R Diercks and 2 other authors, "Overview of steam generator tube degradation and integrity issues", Nuclear Engineering and Design, Volume 194, 1999, pp 19-30.

(DiSalvo et al, 1985)
R DiSalvo and 3 other authors, Management of Severe Accidents, NUREG/CR-4177, Volume 1 (Washington, DC: US Nuclear Regulatory Commission, May 1985).

*(EPA, 1991)
US Environmental Protection Agency, Office of Radiation Programs, Manual of Protective Action Guides and Protective Actions for Nuclear Incidents (Washington, DC: EPA, October 1991) (excerpts).

*(Ellison et al, 1996)
P G Ellison and 11 other authors, Steam Generator Tube Rupture Induced from Operational Transients, Design Bases Accidents, and Severe Accidents, INEL-95/0641 (Idaho: Idaho National Engineering Laboratory, August 1996) (excerpts).

*(Finch, 1987)
Stuart C Finch, "Acute Radiation Syndrome", JAMA, 7 August 1987, Volume 258, Number 5, pp 664-667.

*(Fleming et al, 1987)
Karl N Fleming and 11 other authors, Risk Management Actions to Assure Containment Effectiveness at Seabrook Station (Newport Beach, CA: Pickard, Lowe and Garrick Inc, July 1987) (excerpts).

*(Fragola and Shooman, 1991)
Joseph R Fragola and Martin L Shooman, "Bounding Probabilistic Safety Assessment Probabilities by Reality", in Proceedings of the CSNI Workshop on PSA Applications and Limitations, Santa Fe, New Mexico, September 4-6, 1990, NUREG/CP-0115 (Washington, DC: US Nuclear Regulatory Commission, February 1991), pp 289-306.

*(Gale, 1987)
Robert P Gale, "Immediate Medical Consequences of Nuclear Accidents", JAMA, 7 August 1987, Volume 258, Number 5, pp 625-628.

(Gittus et al, 1982)
J H Gittus and 40 other authors, PWR degraded core analysis (United Kingdom: UK Atomic Energy Authority, April 1982).

*(Glasstone, 1964)
Samuel Glasstone (editor), The Effects of Nuclear Weapons (Washington, DC: US Atomic Energy Commission, February 1964).

*(Golding et al, 1995)
Dominic Golding and 2 other editors, Preparing for Nuclear Power Plant Accidents (Boulder, CO: Westview Press, 1995) (excerpts).

(Guenther et al, 1996)
R J Guenther and 8 other authors, Initial Evaluation of Dry Storage Issues for Spent Nuclear Fuels in Wet Storage at the Idaho Chemical Reprocessing Plant, INEL-96/0140 (Idaho: Idaho National Engineering Laboratory, July 1996).

*(Henry, 2000)
Robert E Henry (Fauske & Associates, Inc), "The response of the Spent Fuel Pool to Postulated Accident Conditions", viewgraphs for presentation to Advisory Committee on Reactor Safeguards, 2 November 2000.

(Hildebrand, 1990)
J E Hildebrand, "The Three Mile Island Unit 2 Recovery: A Decade of Challenge", in IAEA, 1990, pp 65-77.

(Hillner et al, 2000)
E Hillner and 2 other authors, "Long-term corrosion of zircaloy before and after irradiation", Journal of Nuclear Materials, Volume 278, 2000, pp 334-345.

*(Hirsch et al, 1989)
H Hirsch and 3 other authors, IAEA Safety Targets and Probabilistic Risk Assessment (Hannover, Germany: Gesellschaft fur Okologische Forschung und Beratung, August 1989).

(IAEA, 1990)
International Atomic Energy Agency, Recovery Operations in the Event of a Nuclear Accident or Radiological Emergency, Proceedings of a Symposium, Vienna, 6-10 November 1989 (Vienna: IAEA, 1990).

(IAEA, 1989)
International Atomic Energy Agency, On-Site Habitability in the Event of an Accident at a Nuclear Facility, Safety Series No. 98 (Vienna: IAEA, 1989).

(Ibarra et al, 1996)
Jose G Ibarra and 4 other authors, Assessment of Spent Fuel Cooling, AEOD/S96-02 (Washington, DC: US Nuclear Regulatory Commission, September 1996).

(Jo et al, 1989)
J H Jo and 5 other authors, Value/Impact Analyses of Accident Preventive and Mitigative Options for Spent Fuel Pools, NUREG/CR-5281 (Washington, DC: US Nuclear Regulatory Commission, March 1989).

Kang, et al, 2000)
Y C Kang and 4 other authors, "Ultra-high vacuum investigation of the surface chemistry of zirconium", Journal of Nuclear Materials, Volume 281, 2000, pp 57-64.

(Kassawara et al, 1999)
Robert P Kassawara and 2 other authors, "Seismic IPEEE industry insights", Nuclear Engineering and Design, Volume 192, 1999, pp 179-187.

(Kelly et al, 1987)
J E Kelly and 2 other authors, MELPROG-PWR/MOD1 Analysis of a TMLB' Accident Sequence, NUREG/CR-4742 (Washington, DC: US Nuclear Regulatory Commission, January 1987).

*(Kouts et al, 1990)
Herbert J C Kouts and 8 other authors, Special Committee Review of the Nuclear Regulatory Commission's Severe Accident Risks Report (NUREG-1150) NUREG-1420 (Washington, DC: US Nuclear Regulatory Commission, August 1990) (excerpts).

(Laufer, 2000)
Richard Laufer (NRC Staff), letter of 14 January 2000 to James Scarola (CP&L), "NRC Staff's Evaluation of the Shearon Harris Nuclear Power Plant, Unit 1, Individual Plant Examination of External Events (IPEEE) Submittal (TAC No. M83627)".

(Le, 1996)
Ngoc B Le (NRC Staff), letter of 26 January 1996 to W R Robinson (CP&L), "NRC Staff's Evaluation of the Shearon Harris Nuclear Plant Individual Plant Examination (IPE Submittal), (SERIAL: HNP-93-835) (TAC No. M74418)".

*(Leigh et al, 1986)
Christi Leigh and 5 other authors, Analyses of Plume Formation, Aerosol Agglomeration and Rainout Following Containment Failure, NUREG/CR-4222 (Washington, DC: US Nuclear Regulatory Commission, August 1986).

*(Linnemann, 1987)
Roger E Linnemann, "Soviet Medical Response to the Chernobyl Nuclear Accident", JAMA, 7 August 1987, Volume 258, Number 5, pp 637-643.

(Lochbaum, 2000)
David Lochbaum, Nuclear Plant Risk Studies: Failing the Grade (Washington, DC: Union of Concerned Scientists, August 2000).

*(Lyon, 1987)
Warren Lyon (NRC Staff), memorandum of 3 March 1987 to Charles E Rossi (NRC Staff), titled "Steam Generator Tube Rupture During Severe Accidents at Seabrook Station", with enclosure dated 27 January 1987, titled "Seabrook Station Steam Generator Tube Response During Severe Accidents" (Washington, DC: US Nuclear Regulatory Commission).
(Majumdar, 1999)
Saurin Majumdar, "Prediction of structural integrity of steam generator tubes under severe accident conditions", Nuclear Engineering and Design, Volume 194, 1999, pp 31-55.

(McKenna et al, 1987)
T J McKenna and 8 other authors, Pilot Program: NRC Severe Reactor Accident Incident Response Training Manual, NUREG-1210 (5 volumes) (Washington, DC: US Nuclear Regulatory Commission, February 1987.

(Medvedev, 1991)
Grigori Medvedev, The Truth About Chernobyl (New York: Basic Books, 1991)

(Medvedev, 1990)
Zhores Medvedev, The Legacy of Chernobyl (New York: W W Norton, 1990)

(Molina and Cochrell, 1986)
Toni Molina and Ruby Cochrell (editors), Proceedings of the Third Workshop on Containment Integrity, NUREG/CP-0076 (Washington, DC: US Nuclear Regulatory Commission, August 1986).

(Molina and Cochrell, 1984)
Toni Molina and Ruby Cochrell (editors), Proceedings of the Second Workshop on Containment Integrity, NUREG/CP-0056 (Washington, DC: US Nuclear Regulatory Commission, August 1984).

(Motoe, 2000)
Suzuki Motoe, "Analysis of high burnup fuel behavior in Halden reactor by FEMAXI-V code", Nuclear Engineering and Design, Volume 201, 2000, pp 99-106.

(Niemczyk, 1987)
S J Niemczyk (editor), Proceedings of the Symposium on Chemical Phenomena Associated with Radioactive Releases During Severe Nuclear Plant Accidents, NUREG/CP-0078 (Washington, DC: US Nuclear Regulatory Commission, June 1987).

(Norris, 1999)
W E Norris and 2 other authors, "Inspection of nuclear power plant containment structures", Nuclear Engineering and Design, Volume 192, 1999, pp 303-329.

(Nourbakhsh et al, 1998)
H P Nourbakhsh and 2 other authors, Analysis of Spent Fuel Heatup Following Loss of Water in a Spent Fuel Pool, A Users' Manual for the Computer Code SHARP, Draft Report for Comment, NUREG/CR-6441 (Washington, DC: US Nuclear Regulatory Commission, May 1998).

(Nourbakhsh, 1993)
H P Nourbakhsh, Estimate of Radionuclide Release Characteristics Into Containment Under Severe Accident Conditions, NUREG/CR-5747 (Washington, DC: US Nuclear Regulatory Commission, November 1993).

(NRC/EPA, 1978)
NRC/EPA Task Force on Emergency Planning, Planning Basis for the Development of State and Local Government Radiological Emergency Response Plans in Support of Light Water Nuclear Power Plants, NUREG-0396 (Washington, DC: US Nuclear Regulatory Commission, December 1978).

(NRC/FEMA, 1980)
US Nuclear Regulatory Commission and Federal Emergency Management Agency, Criteria for Preparation and Evaluation of Radiological Emergency Response Plans and Preparedness in Support of Nuclear Power Plants, NUREG-0654 (Washington, DC: NRC, November 1980).

*(NRC, 2000)
US Nuclear Regulatory Commission, Draft Final Technical Study of Spent Fuel Pool Accident Risk at Decommissioning Nuclear Power Plants (Washington, DC: NRC, February 2000) (excerpts).

*(NRC, 1998)
US Nuclear Regulatory Commission, Risk Assessment of Severe Accident-Induced Steam Generator Tube Rupture, NUREG-1570 (Washington, DC: NRC, March 1998).

(NRC, 1997a)
US Nuclear Regulatory Commission, Individual Plant Examination Program: Perspectives on Reactor Safety and Plant Performance, NUREG-1560 (3 volumes) (Washington, DC: NRC, December 1997).

*(NRC, 1997b)
US Nuclear Regulatory Commission, The Use of PRA in Risk-Informed Applications, Draft Report for Comment, NUREG-1602 (Washington, DC: NRC, June 1997) (excerpts).

(NRC, 1995)
US Nuclear Regulatory Commission, "Use of Probabilistic Risk Assessment Methods in Nuclear Regulatory Activities; Final Policy Statement", 60 FR 42622, 16 August 1995.

*(NRC, 1990)
US Nuclear Regulatory Commission, Severe Accident Risks: An Assessment for Five US Nuclear Power Plants, NUREG-1150 (3 volumes) (Washington, DC: NRC, December 1990) (excerpts).

(NRC, 1986)
US Nuclear Regulatory Commission, "Safety Goals for the Operations of Nuclear Power Plants; Policy Statement; Republication", 51 FR 30028, 21 August 1986.

(NRC, 1985)
US Nuclear Regulatory Commission, "Policy Statement on Severe Reactor Accidents Regarding Future Designs and Existing Plants", 50 FR 32138, 8 August 1985.

*(NRC, 1984)
US Nuclear Regulatory Commission, Probabilistic Risk Assessment (PRA) Reference Document, Final Report, NUREG-1050, (Washington, DC: NRC, September 1984) (excerpts).

(NRC, 1983)
US Nuclear Regulatory Commission, Final Environmental Statement Related to the Operation of Shearon Harris Nuclear Power Plant Units 1 and 2, NUREG-0972, (Washington, DC: NRC, October 1983).

(NRC, 1982)
US Nuclear Regulatory Commission, NRC Report on the January 25, 1982 Steam Generator Tube Rupture at R E Ginna Nuclear Power Plant, NUREG-0909, (Washington, DC: NRC, April 1982).

(NRC, 1981)
US Nuclear Regulatory Commission, Final Programmatic Environmental Impact Statement related to decontamination and disposal of radioactive wastes resulting from March 28, 1979, accident, Three Mile Island Nuclear Station, Unit 2, NUREG-0683 (2 volumes) (Washington, DC: NRC, March 1981).

(NRC, 1979)
US Nuclear Regulatory Commission, Generic Environmental Impact Statement on Handling and Storage of Spent Light Water Power Reactor Fuel, NUREG-0575 (2 volumes), (Washington, DC: NRC, August, 1979).

*(NRC, 1975)
US Nuclear Regulatory Commission, Reactor Safety Study, WASH-1400 (NUREG-75/014), Appendix VI (Washington, DC: NRC, October 1975).

(Oh et al, 2000)
Je Yong Oh and 2 other authors, "A Normalization Method for Relationship Between Yield Stress and Delayed Hydride Cracking Velocity in Zr-2.5Nb Alloys", Journal of Nuclear Science and Technology, Volume 37, No. 7, July 2000, pp 595-600.

*(Palla, 2000)
Robert L Palla (NRC Staff), "Risk Analysis Results and Conclusions", viewgraphs for presentation to Advisory Committee on Reactor Safeguards, 2 November 2000.

(Park et al, 1999)
Kwangheon Park and 2 other authors, "The effects of adsorbates on Zircaloy oxidation in air and steam", Journal of Nuclear Materials, Volume 270, 1999, pp 154-164.

*(Parry, 1996)
Gareth W Parry, "The characterization of uncertainty in Probabilistic Risk Assessments of complex systems", Reliability Engineering and System Safety, Volume 54, 1996, pp 119-126.

(Parry, 1988)
Gareth W Parry, "On the Meaning of Probability in Probabilistic Safety Assessment", Reliability Engineering and System Safety, Volume 23, 1988, pp 309-314.

(Pelto et al, 1985)
P J Pelto and 2 other authors, Reliability Analysis of Containment Isolation Systems, NUREG/CR-4220 (Washington, DC: US Nuclear Regulatory Commission, June 1985).

(Pisano et al, 1984)
Nicola A Pisano and 3 other authors, The Potential for Propagation of a Self-Sustaining Zirconium Oxidation Following Loss of Water in a Spent Fuel Storage Pool, rough draft report prepared for the US Nuclear Regulatory Commission, January 1984.

*(Powers, 2000a)
Dana A Powers (chair, Advisory Committee on Reactor Safeguards), letter of 20 June 2000 to Richard A Meserve (chair, US Nuclear Regulatory Commission).

*(Powers, 2000b)
Dana A Powers (chair, Advisory Committee on Reactor Safeguards), letter of 13 April 2000 to Richard A Meserve (chair, US Nuclear Regulatory Commission).

*(Powers et al, 1994)
D A Powers and 2 other authors, A Review of the Technical Issues of Air Ingression During Severe Reactor Accidents, NUREG/CR-6218 (Washington, DC: US Nuclear Regulatory Commission, September 1994).

(Prassinos et al, 1989)
P G Prassinos and 8 other authors, Seismic Failure and Cask Drop Analyses of the Spent Fuel Pools at Two Representative Nuclear Power Plants, NUREG/CR-5176 (Washington, DC: US Nuclear Regulatory Commission, January 1989).

*(Ramsdell and Simonen, 1997)
J V Ramsdell Jr and C A Simonen, Atmospheric Relative Concentrations in Building Wakes, NUREG/CR-6331 (Washington, DC: US Nuclear Regulatory Commission, May 1997) (excerpts).

(Ravindra et al, 1990)
M K Ravindra and 3 other authors, "Recent PRA applications", Nuclear Engineering and Design, Volume 123, 1990, pp 155-166.

(Robinson, 1998)
William R Robinson (CP&L), letter of 16 February 1998 to NRC, "Response to Request for Additional Information on the Shearon Harris IPEE Submittal (TAC No. M83627)".

(Robinson, 1995)
William R Robinson (CP&L), letter of 18 September 1995 to NRC, "Individual Plant Examination (IPE) Supplemental Information".

(Rogovin et al, 1980)
Mitchell Rogovin (director), Three Mile Island: A Report to the Commissioners and the Public (2 volumes) (Washington, DC: US Nuclear Regulatory Commission, January 1980).

(Rudling and Wikmark, 1999)
Peter Rudling and Gunnar Wikmark, "A unified model of Zircaloy BWR corrosion and hydriding mechanisms", Journal of Nuclear Materials, Volume 265, 1999, pp 44-59.

(Sailor et al, 1987)
V L Sailor and 3 other authors, Severe Accidents in Spent Fuel Pools in Support of Generic Safety Issue 82, NUREG/CR-4982 (Washington, DC: US Nuclear Regulatory Commission, July 1987).

*(Schmitz and Papin, 1999)
Franz Schmitz and Joelle Papin, "High burnup effects on fuel behavior under accident conditions: the tests CABRI REP-Na", Journal of Nuclear Materials, Volume 270, 1999, pp 55-64.

(Shleien, 1983)
Bernard Shleien, Preparedness and Response in Radiation Accidents (Rockville, MD: US Department of Health and Human Services, August 1983).

(Sholly and Thompson, 1986)
Steven C Sholly and Gordon Thompson, The Source Term Debate (Cambridge, Massachusetts: Union of Concerned Scientists, January 1986).

(Siu et al, 1996)
N Siu and 4 other authors, Loss of Spent Fuel Pool Cooling PRA: Model and Results, INEL-96/0334 (Idaho Falls, ID: Idaho National Engineering Laboratory, September 1996).

*(Soffer et al, 1995)
L Soffer and 4 other authors, Accident Source Terms for Light-Water Nuclear Power Plants, NUREG-1465 (Washington, DC: US Nuclear Regulatory Commission, February 1995).

(Summitt, 1999)
Ricky Summitt, Shearon Harris Nuclear Plant Probabilistiv Safety Assessment, Assessment of Harris Fuel Handling Building Operations (Knoxville, TN: Ricky Summitt Consulting, May 1999).

(Summitt, 1997)
Ricky Summitt, Shearon Harris Nuclear Plant Probabilistiv Safety Assessment, Groundrules and Assumptions (Knoxville, TN: Ricky Summitt Consulting, October 1997).

(Thompson, 1999)
Gordon Thompson, Risks and Alternative Options Associated with Spent Fuel Storage at the Shearon Harris Nuclear Power Plant (Cambridge, Massachusetts: Institute for Resource and Security Studies, February 1999).

(Thompson, 1996)
*Gordon Thompson, War, Terrorism and Nuclear Power Plants (Canberra: Peace Research Centre, Australian National University, October 1996).

*(Thompson et al, 1979)
Gordon Thompson and 3 other authors, Report of the Gorleben International Review, Chapter 3, Potential Accidents and Their Effects, submitted to the Government of Lower Saxony, March 1979. (Note: The referenced document is the English manuscript of the report, which was translated into German prior to formal submission.)

*(Throm, 1989)
E D Throm, Regulatory Analysis for the Resolution of Generic Issue 82, "Beyond Design Basis Accidents in Spent Fuel Pools", NUREG-1353 (Washington, DC: US Nuclear Regulatory Commission, April 1989) (excerpts).

*(Tinkler, 2000)
Charles G Tinkler (NRC Staff), viewgraphs for presentation to Advisory Committee on Reactor Safeguards, 18 October 2000.

(Travers, 1990)
W D Travers, "United States Nuclear Regulatory Commission's Regulatory Oversight of the Cleanup Operations at the Three Mile Island Unit 2 Station (1979-1989)", in IAEA, 1990, pp 79-85.

(Travis et al, 1997)
R J Travis and 3 other authors, A Safety and Regulatory Assessment of Generic BWR and PWR Permanently Shutdown Nuclear Power Plants, NUREG/CR-6451 (Washington, DC: US Nuclear Regulatory Commission, August 1997).

(Vijaykumar et al, 1995)
R Vijaykumar and 2 other authors, Technical Evaluation Report of the Shearon Harris Individual Plant Examination Back-End Submittal (Rockville, MD: Energy Research Inc, May 1995).

(Wreathall et al, 1985)
J Wreathall and 2 other authors, Management of Severe Accidents, NUREG/CR-4177, Volume 2 (Washington, DC: US Nuclear Regulatory Commission, May 1985).

THE POTENTIAL FOR A LARGE ATMOSPHERIC RELEASE
OF RADIOACTIVE MATERIAL FROM SPENT FUEL POOLS
AT THE HARRIS NUCLEAR POWER PLANT:
The Case of a Pool Release Initiated by a Severe Reactor Accident

A report by IRSS
20 November 2000

APPENDIX B -- Relevant characteristics of the Harris plant

1. The Harris reactor

Characteristics of the Harris reactor that are used in this report include:[1]

- The core has 157 fuel assemblies.
- A fuel assembly has a mass of 0.461 MTHM
- At discharge, a Harris fuel assembly contains 0.065 MCi of Cs-137

2. Spent fuel at Harris

Relevant characteristics of spent fuel include:

- A BWR fuel assembly contains about 1/4 of the amount of Cs-137 in a PWR assembly (and generates about 1/4 of the decay heat); accordingly, one BWR fuel assembly can be regarded as 1/4 of a "PWR equivalent" fuel assembly.[2]
- Pool A has a capacity for 360 PWR assemblies and 363 BWR assemblies.[3]
- Pool B has a capacity for 768 PWR assemblies and 2178 BWR assemblies.[4]
- Pool A contains (as of 13 September 2000) 170 PWR assemblies and 353 BWR assemblies.[5]
- Pool B contains (as of 13 September 2000) 720 PWR assemblies and 1862 BWR assemblies.[6]

---

[1] Thompson, 1999, Appendix A.
[2] Ibid.
[3] Ibid.
[4] Ibid.
[5] Carr, 2000.
[6] Ibid.

THE POTENTIAL FOR A LARGE ATMOSPHERIC RELEASE
OF RADIOACTIVE MATERIAL FROM SPENT FUEL POOLS
AT THE HARRIS NUCLEAR POWER PLANT:
The Case of a Pool Release Initiated by a Severe Reactor Accident

A report by IRSS
20 November 2000

APPENDIX C – Level 1 PRA analysis

1. Identifying a selected set of degraded-core sequences

IRSS reviewed available Level 1 PRA literature in order to identify a selected set of degraded-core accident sequences for the Harris reactor. This literature included the IPE, PSA and IPEEE for Harris.[1]

As a result of this review, IRSS selected two sequences that are characterized in the Harris PSA.[2] Both sequences actually represent a class of sequences with similar properties. For simplicity of presentation, classes of sequences are discussed, in this appendix and elsewhere in this report, as though they are individual sequences.

The first sequence selected from the Harris PSA was the TQUB sequence. The PSA's point estimate of core damage probability for this sequence is 1.69×10^{-5} per year. This sequence could arise in four different categories:

- seismic-induced sequences, accounting for 40 percent of the TQUB core damage probability;[3]
- internal flooding-induced sequences, accounting for 30 percent of the TQUB core damage probability;
- fire-induced sequences, accounting for 17 percent of the TQUB core damage probability; and
- other sequences that typically involve loss of nonsafety DC power.

With the exception of the fire-induced sequences (for which the PSA's summary description is unclear), each of the above sequences clearly involves:

---

[1] CP&L, 1993; CP&L, 1995a; CP&L, 1995b.

[2] CP&L, 1995a, Section 6, pp 9-10.

[3] The PSA states that seismic-induced sequences account for "more than 40% of the total of this sequence".

- loss of high-pressure coolant injection;
- loss of feedwater to steam generators (either initially or after a few hours' delay); and
- interruption of cooling to reactor coolant pump (RCP) seals, leading to seal leakage.

Absent any failure (other than RCP seal leakage) of the reactor coolant system (RCS) boundary during the sequence, these sequences would exhibit high RCS pressure until the late stages of core degradation.[4]

The second sequence selected from the PSA was the SBO (station blackout sequence). The PSA's point estimate of core damage probability for this sequence is 7.9×10^{-6} per year. This sequence would exhibit the same characteristics as are discussed in the preceding two paragraphs.

Thus, if the fire-induced TQUB sequences are set aside, the PSA has characterized four high-pressure, degraded-core sequences that involve loss of feedwater and leakage from RCP seals. These sequences, and their PSA-derived core damage probabilities (point estimates) are:

• TQUB-seismic	0.7×10^{-5} per year (40% of TQUB)
• TQUB-flooding	0.5×10^{-5} per year (30 % of TQUB)
• TQUB-loss of nonsafety DC power	0.2×10^{-5} per year (13% of TQUB)
• SBO (station blackout)	0.8×10^{-5} per year (100% of SBO)

Each of these four sequences would involve a loss of component cooling water, which would lead to a loss of spent fuel pool cooling. Many manifestations of these sequences would involve a loss of electrical power, which would not only lead to a loss of component cooling water but would also directly prevent the operation of the spent fuel pool cooling systems. The initiating events for the TQUB-seismic and TQUB-flooding sequences could also directly disable the spent fuel pool cooling systems.

2. Adjustment of the TQUB-seismic probability

The PSA's point estimate of the probability of core damage for the TQUB-seismic sequence relies upon seismic hazard curves developed by the Electric Power

[4] Depressurization via the pressurizer PORVs would be unlikely during these sequences.

Research Institute (EPRI).[5] An EPRI seismic hazard curve is shown in the PSA in Figure 3-8, which also shows a NUREG-1488 seismic hazard curve.[6] In both cases only one curve is shown, presumably a median curve.

The NUREG-1488 curves are 1993 updates of seismic hazard curves first developed by Lawrence Livermore National Laboratory in 1989. The evolution and characteristics of the Livermore and EPRI curves are described in the NRC Staff report NUREG-1602.[7] That report states, in regard to the EPRI and 1993-updated Livermore seismic hazard curves, that: "either approach is currently considered to be acceptable".[8]

IRSS has adjusted the PSA-derived point estimate of the probability of core damage from a TQUB-seismic sequence, so as to rely on the 1993 Livermore curves rather than the EPRI curves. That adjustment was performed by multiplying the PSA-derived point estimate (see above) by the ratio of the frequencies of 0.4 g acceleration shown by the NUREG-1488 and EPRI curves in Figure 3-8 of the PSA.

The adjusted point estimate probability of core damage from a TQUB-seismic sequence is 1.6×10^{-5} per year. That adjusted estimate is shown in Table 1 of the main report. Also shown in that table are point estimate probabilities for the TQUB-flooding, TQUB-loss of nonsafety DC power, and SBO sequences. Those estimates are derived directly from the PSA, as explained in Section 1 of this appendix.

3. Probability range

CP&L has not performed any uncertainty analysis in the PSA. Range factors for various initiating events are shown in Table 3-17 of the PSA.[9] These range factors are not defined.

If an uncertain parameter has a lognormal probability density, it is common to speak of an error factor (EF), such that the 95th-percentile value is the median value multiplied by EF and the 5th-percentile value is the median value divided

---

[5] CP&L, 1995a, Section 3, pp 42-44.
[6] Ibid, page 43.
[7] NRC, 1997b, pages 5-3 and 5-11.
[8] NRC, 1997b, page 5-3.
[9] CP&L, 1995a, Section 3, page 45.

by EF. IRSS assumes that the range factors shown in the PSA are intended to have a qualitatively similar role.

Table 3-17 of the PSA shows a range factor of 5.6 for loss of offsite power. Application of this factor to the point estimate for the probability of the SBO sequence (0.8×10^{-5} per year) provides an illustrative range (0.1×10^{-5} to 4.5×10^{-5} per year), as shown in Table 1 of the main report.

Table 3-17 of the PSA shows a range factor of 10.0 for earthquakes. Application of this factor to the point estimate for the probability of the TQUB-seismic sequence (1.6×10^{-5} per year) provides an illustrative range (1.6×10^{-6} to 1.6×10^{-4} per year), as shown in Table 1 of the main report.

For the purposes of Table 5 of the main report, IRSS assumed arbitrarily that the range factors for the TQUB-flooding and TQUB-loss of nonsafety DC power sequences are 5.0 in each case. That assumption yields the estimates shown in Table 5 of the main report for the combined probability of the selected degraded-core sequences, as follows:

- point estimate — 3.1×10^{-5} per year (as in Table 1)
- range (illustrative)[10] — 0.4×10^{-5} to 2.4×10^{-4} per year

Development of a comprehensive analysis of the ASLB's seven-part event sequence would require, among other features, completion of a Level 1 PRA that propagates uncertainties through its analysis. (See Section 3.1 of the main report.) The illustrative ranges shown above can provide, at best, an indication of the need to perform a thorough uncertainty analysis.

[10] Here, the value at each end of the range is the sum of the values at that end of the range for the four sequences.

THE POTENTIAL FOR A LARGE ATMOSPHERIC RELEASE OF RADIOACTIVE MATERIAL FROM SPENT FUEL POOLS AT THE HARRIS NUCLEAR POWER PLANT:
The Case of a Pool Release Initiated by a Severe Reactor Accident

A report by IRSS
20 November 2000

APPENDIX D – Level 2 PRA analysis

1. Potential for containment failure or bypass

For the degraded-core sequences selected in Appendix C, a variety of potential modes of containment failure or bypass could lead to a release of radioactive material from the containment. The release could be in gaseous, particulate or liquid form. Radioactive material could be released directly to the atmosphere, into buildings adjacent to the containment, or into the ground.

The focus here is on a bypass pathway through the steam generators to the atmosphere. Other pathways deserve detailed analysis.

2. Temperature-induced steam generator tube rupture (TI-SGTR)

The potential for containment bypass as a result of TI-SGTR has been studied since the 1980s, as discussed in Section 4.2 of the main report. In order to estimate the conditional probability of TI-SGTR for the selected degraded-core sequences, IRSS has relied upon findings in the NRC Staff study NUREG-1570.[1]

Each of the selected degraded-core sequences involves a loss of feedwater. Thus, the secondary side of the steam generators would be dry at the time of core uncovery. One must also consider the secondary-side pressure status at that time, and Table 2.6 of NUREG-1570 provides a Staff Model that addresses this matter.[2] The Staff Model shows conditional probabilities of a depressurized secondary side, as follows:

- all SGs intact 0.22
- one SG depressurized 0.43

---

[1] NRC, 1998.
[2] Ibid, page 2-29.

- all SGs depressurized[3] 0.35

IRSS has assumed that the "all SGs depressurized" case can be decomposed to cases involving depressurization of two or three SGs, with each case having a conditional probability of 0.18.

Table 5.1a of NUREG-1570 provides estimates of the conditional probability of TI-SGTR under various conditions.[4] For cases involving RCP seal leakage, this table shows conditional probabilities of TI-SGTR, as follows:

- all SGs intact 0.14
- one SG depressurized 0.40
- two SGs depressurized 0.59
- three SGs depressurized 1.0

The conditional probabilities shown above can be combined as shown in Table 2 of the main report. That table shows a conditional probability of TI-SGTR, for the selected degraded-core sequences, of 0.49 (50 percent).[5]

3. Source term

The Harris PSA has identified a release category equivalent to a TI-SGTR release. That is the RC-5C release category, whose estimated source term is shown in Table 9-4 of the PSA.[6] This source term involves a release of 59 percent of the Cs and I in the core and 0.009 percent of the Te. (The Cs and I releases are shown in Table 9-4 as CsI release.)

As discussed in Section 4.2 of the main report, the NRC Staff study NUREG-1465 has pointed out that new source-term phenomena come into play at burnups above 40 GW-days/MTHM. Notably, fuel can be highly fragmented or powdered. This effect is significant for Harris in view of the burnup trends there. (See Section 4.2.)

---

[3] At page 2-31 of NUREG-1570 (NRC, 1998) this case is described as having "two or more" SGs depressurized.

[4] NRC, 1998, page 5-2.

[5] This finding assumes that there would be no recovery of feedwater or high-pressure coolant injection prior to TI-SGTR.

[6] CP&L, 1995a, Section 9, page 12.

French experiments have confirmed that high-burnup fuel can be highly fragmented.[7] A significant observation is that, at burnups beyond about 45 GW-days/MTHM, a peripheral zone of about 0.2 mm in width is created at the fuel surface. This zone exhibits a high plutonium content, very high local burnup, a submicronic grain size, and high porosity.[8] A zone of width 0.2 mm represents about 10 percent of the volume of a Harris fuel pellet.

IRSS concludes that the TI-SGTR source term at Harris would include small particles. Thus, the release of Te would substantially exceed the release shown in Table 9-4 of the PSA.[9]

Following the rupture of SG tubes, radioactive material would be swept out of the primary circuit by steam flow. Steam already present in the circuit would be supplemented by evaporation of residual water in the circuit and water that is discharged from the accumulators.[10] At certain stages of the release, the flow entering the atmosphere from the SRVs could be comparatively cool and wet.

4. Onsite deposition

From the preceding discussion it is clear that a TI-SGTR release at Harris would include radioactive material in the form of particles of a range of sizes, and in gaseous form. This material would enter the atmosphere from the SRV vent stacks at the 305-ft roof level, just outside the containment. The material would be swept out by a flow of steam whose conditions could vary from highly superheated to comparatively cold and wet. A release at this location of the plant would be highly susceptible to building wake effects.

Analysis of this situation is exceptionally difficult. The situation combines a number of factors that are difficult to model when considered separately, and even more difficult to model when considered in combination.

For example, efforts have been made to develop sophisticated (complex) models to study building wake effects. These models have been described as follows:[11]

---

[7] Schmitz and Papin, 1999.

[8] Ibid, page 58.

[9] For background on Te releases, see: Powers et al, 1994, pp 35-37.

[10] At Harris, each of the 3 accumulators is said to have a capacity of 1,000 cubic feet of water (CP&L, 1993, page 4-3).

[11] Barker, 1982, page 1.

> "By definition, therefore, the complex models are conceptually better, but they are extremely difficult to use and, in general, they can only consider simplistic building shapes, so that their applicability to a complex site such as a nuclear power station is somewhat doubtful."

It is therefore not surprising that the NRC Staff uses a simple model to assess the habitability of nuclear power plant control rooms under accident conditions. This model, the ARCON code, is a straight-line Gaussian model.[12] Such a model can shed little light on the building wake effects that would arise for a TI-SGTR release at Harris.

Building wake effects could, by themselves, lead to significant onsite deposition of radioactive material. The presence of fragmented and powdered fuel in the release would also promote onsite deposition. These effects could be supplemented by hard-to-model phenomena such as aerosol agglomeration and plume rainout.[13] In this connection it is interesting to note that the 1982 steam generator tube rupture event at Ginna led to onsite deposition of a large fraction of the (small) radioactive release.[14]

5. Scoping estimate

Drawing from the above considerations, IRSS has developed a scoping estimate for onsite deposition of radioactive material pursuant to a TI-SGTR release at Harris. The estimate is that onsite deposition occurs uniformly within a circle 200 meters in radius, centered on the location of the SRV and PORV vent stacks. Figure 3 of the main report shows the relationship of this area to the Harris site. The material deposited on this area is estimated to include 5% of the Te isotopes, 10% of the I isotopes and 10% of the Cs isotopes in the Harris reactor core.

---

[12] Ramsdell and Simonen, 1997, Introduction and page 41.

[13] Leigh et al, 1986.

[14] Ibid, pp 82-83; NRC, 1982, pp 1-6 to 1-7.

THE POTENTIAL FOR A LARGE ATMOSPHERIC RELEASE
OF RADIOACTIVE MATERIAL FROM SPENT FUEL POOLS
AT THE HARRIS NUCLEAR POWER PLANT:
The Case of a Pool Release Initiated by a Severe Reactor Accident

A report by IRSS
20 November 2000

APPENDIX E – Radiation exposure at the Harris site after a reactor accident

1. Onsite contamination by radioactive material

Appendix D provides a scoping estimate for onsite contamination at Harris, pursuant to a TI-SGTR release. The estimate is that onsite deposition occurs uniformly within a circle 200 meters in radius, centered on the location of the SRV and PORV vent stacks. Figure 3 of the main report shows the relationship of this area to the Harris site. The material deposited on this area includes 5% of the Te isotopes, 10% of the I isotopes and 10% of the Cs isotopes in the Harris reactor core.

IRSS has focussed its analysis on the Te, I and Cs isotopes in the Harris core. Other isotopes also deserve analysis. Their inclusion in the analysis would add to the doses estimated here.

To estimate the inventory of Te, I and Cs isotopes in the Harris core, IRSS obtained core inventories from Table VI 3-1 (page 3-3) of WASH-1400.[1] These inventories were adjusted by the ratio (2910/3200) of the rated thermal powers of the Harris and WASH-1400 reactors.

2. Radiation dose in the contaminated area

The whole-body gamma groundshine dose from deposited radioisotopes can be calculated using dose conversion factors from Table VI C-2 (page C-6) of WASH-1400.[2]

For the deposition characteristics specified above, IRSS used the WASH-1400 dose conversion factors to calculate the whole-body gamma groundshine doses accumulated by unshielded persons, assuming continuous exposure over

---

[1] NRC, 1975.
[2] Ibid.

periods of 1 day and 7 days. The findings of this calculation are (dose in rem for each set of isotopes):[3]

	1-day exposure	7-day exposure
Te isotopes	3.1E+04	1.4E+05
I isotopes	7.0E+04	1.3E+05
Cs isotopes	5.0E+03	3.3E+04

These findings are presented in Table 3 of the main report.

3. Radiation exposure in the control room

The doses shown above are to unshielded persons. In order to estimate the dose in the Harris control room, one must determine the protection factor for the control room. Here, the protection factor is defined as the ratio A/B, where:

- A = the whole-body external gamma dose outside buildings on the Harris site
- B = the whole-body dose inside the control room

In determining the protection factor, one must consider the passage of gamma radiation from the external environment to the interior of the control room. Also, one must consider the infiltration of contaminated air into the room. Experience in analyzing the effects of nuclear weapons can be a source of guidance when addressing this problem.[4]

Section 4.4 of the main report summarizes characteristics of the control room that are relevant to a determination of the protection factor. That discussion refers to plant drawings which indicate that the control room roof is approximately 2 ft (60 cm) thick, with support beams at intervals. No significant shielding exists above the roof.

The first step in estimating the protection factor for the control room is to estimate the attenuation of gamma photons as they pass through the concrete

---

[3] This calculation neglects decay of radioisotopes during the time period between reactor shutdown and deposition on the site.

[4] Glasstone, 1964, pp 394-402 and pp 470-475.

surrounding the control room. Note that a collimated beam of gamma photons, passing through a thin shield, will lose intensity according to the equation:[5]

$I = I_0 \exp(-Dx)$ where x = distance
D = linear absorption coefficient

The Te, I and Cs isotopes that are considered here will emit photons over a range of energies. Photons with an energy of 1 MeV can be considered representative.

For 1 MeV photons passing through concrete, D = 0.15 per cm[6]

Applied to concrete 60 cm thick, this equation would yield a protection factor (ratio of I_0 to I), for 1 MeV photons, of 8,000. However, the equation is not valid for concrete with a thickness of 60 cm, because it does not consider penetration of the concrete by scattered photons.

Complex analysis would be required to accurately estimate the gamma protection factor for the Harris control room. That analysis would need to consider the configuration of the structures surrounding the control room, and the distribution of gamma-emitting material outside those structures.

Also, one must consider nonuniformities in the deposition of radioactive material across the Harris site. The scoping model used here, which distributes radioactive material uniformly across a circular area with a 200 meter-radius, is highly simplified.

Finally, one must consider the infiltration of contaminated air into the control room. That would require an assessment of the potential for successful isolation of the control room.

A comprehensive analysis of the protection factor for the Harris control room would be a complicated task. The findings would depend heavily on the assumptions used in the analysis.

Drawing from the considerations set forth above, IRSS has developed a scoping estimate, namely that the protection factor for the Harris control room would be in the range 100-1,000.

---

[5] Ibid, page 396.
[6] Ibid, page 397.

THE POTENTIAL FOR A LARGE ATMOSPHERIC RELEASE
OF RADIOACTIVE MATERIAL FROM SPENT FUEL POOLS
AT THE HARRIS NUCLEAR POWER PLANT:
The Case of a Pool Release Initiated by a Severe Reactor Accident

A report by IRSS
20 November 2000

APPENDIX F – Radiation exposure: health effects and regulatory limits

1. Health effects

The Environmental Protection Agency (EPA) has reviewed the adverse health effects that could arise from radiation exposure during a nuclear accident.[1] There is a large amount of other literature on this subject.[2] Some important findings are:[3]

- The median whole-body dose that yields prodromal effects [nausea, vomiting, etc., typically experienced soon after exposure] is 150 rem.
- The 98th percentile whole-body dose that yields prodromal effects is 250 rem.
- The median whole-body fatal dose is 300 rem.
- The 95th percentile whole-body fatal dose is 460 rem.

At the median dose, 50 percent of an exposed population would exhibit the effect. At the 95th (98th) percentile dose, 95 (98) percent of an exposed population would exhibit the effect.

Note that the word "dose" is used in this appendix, and elsewhere in this report, to represent total effective dose equivalent (TEDE).

---

[1] EPA, 1991, page 2-12 and Appendix B.

[2] See, for example: Finch, 1987; Gale, 1987; Linneman, 1987.

[3] EPA, 1991, page 2-12.

2. Regulatory limits

GDC 19

The NRC's general design criteria (GDCs) for nuclear power plants include GDC 19, which states:[4]

> "A control room shall be provided from which actions can be taken to operate the nuclear power unit safely under normal conditions and to maintain it in a safe condition under accident conditions, including loss-of-coolant accidents. Adequate radiation protection shall be provided to permit access and occupancy of the control room under accident conditions without personnel receiving radiation exposures in excess of 5 rem whole body, or its equivalent to any part of the body, for the duration of the accident.
>
> Equipment at appropriate locations outside the control room shall be provided (1) with a design capability for prompt hot shutdown of the reactor, including necessary instrumentation and controls to maintain the unit in a safe condition during hot shutdown, and (2) with a potential capability for subsequent cold shutdown of the reactor through the use of suitable procedures."

NRC occupational dose limits

The NRC has established occupational dose limits for nuclear power plant workers.[5] For an adult, the annual limit is 5 rem to the whole body or, if that is more limiting, the sum of doses to particular organs.[6] An exception to this limit is allowed for "planned special exposures". Licensees are permitted to authorize such exposures if several conditions are met, including:[7]

- There exists "an exceptional situation when alternatives that might avoid the dose estimated to arise from the planned special exposure are unavailable or impractical".
- The licensee authorizes the exposure in writing before it occurs.

---

[4] 10 CFR Part 50, Appendix A.
[5] 10 CFR Part 20, Subpart C.
[6] Ibid, Section 20.1201.
[7] Ibid, Section 20.1206.

- A worker designated for special exposure is informed, in advance of his exposure, of the anticipated dose and its accompanying risk; also, after his exposure the worker is informed, in writing, of his estimated dose.
- The worker's incremental whole-body dose from the special exposure, and from other exposures above the occupational limit, does not exceed 5 rem during any year and 25 rem during the worker's lifetime. (The sum of particular organ doses would also apply here, if that is more limiting.)

EPA guidance

The EPA has set forth guidance on dose limits for workers who perform emergency services during a nuclear accident.[8] Some important provisions of this guidance are:[9]

- Whole-body doses should, to the extent practicable, be limited to 5 rem.
- Higher dose limits may be justified in some emergency situations; generally, doses should be limited to 10 rem for protecting valuable property, and to 25 rem for life-saving activities and protection of large populations.
- In rare situations a dose in excess of 25 rem may be unavoidable; workers undertaking activities that will lead to such doses must do so voluntarily and with full awareness of the risks involved.
- Dose limits above 5 rem should not apply unless: (a) lower doses cannot be achieved through rotation of workers or other commonly-used methods; and (b) instrumentation is available to measure workers' exposure.

CP&L requirements

CP&L's Emergency Plan for the Harris plant sets forth requirements related to onsite radiation exposure during accidents, including the following:[10]

- Upon declaration of an emergency, the position of Site Emergency Coordinator (SEC) will be activated.
- Until relieved by the Emergency Response Manager (ERM), the SEC will have the authority to direct all emergency operations.

---

[8] EPA, 1991, Chapter 2 and Appendix C.

[9] Ibid, see especially pages 2-11 and C-23.

[10] CP&L-POM, Volume 1, Part 2, "Emergency Plan"; see especially pages 20-63.

- After activation of the Emergency Operations Facility [an offsite facility] the ERM will assume overall responsibility for emergency response and will direct offsite activities; the SEC will direct onsite activities.
- The SEC function will be initially performed from the Control Room (typically by the Superintendent-Shift Operations); after activation of the Technical Support Center (TSC) the SEC function will be transferred to the TSC.
- The SEC (initially in the Control Room, then in the TSC) must approve all planned radiation exposures for onsite personnel in excess of 5 rem or entry into radiation fields greater than 25 rem/hr.
- After activation of the Emergency Operations Facility, the ERM must approve all planned radiation exposures for offsite personnel in excess of 5 rem or entry into radiation fields greater than 25 rem/hr.
- The TSC is provided with radiation protection equivalent to habitability requirements for the Control Room, so that the dose to an individual in the TSC for the duration of a design-basis accident will be less than 5 rem.
- TSC equipment is nonsafety-related and nonredundant.
- Mechanical and electrical systems drawings, the Plant Operations Manual, the FSAR, and CP&L, state and local emergency plans are located in the TSC and the Emergency Operations Facility; no other location containing this body of documents is identified in the Emergency Plan.
- Copies of the Emergency Plan and Procedures are located onsite in the Control Room, the TSC and the Operations Support Center (Procedures only).
- All personnel onsite must be accounted for within 30 minutes of declaration of an emergency and continuously thereafter; the Security Director will coordinate the accountability of personnel inside the Protected Area.
- The Security Director, normally located in the TSC, will report to the SEC.

THE POTENTIAL FOR A LARGE ATMOSPHERIC RELEASE
OF RADIOACTIVE MATERIAL FROM SPENT FUEL POOLS
AT THE HARRIS NUCLEAR POWER PLANT:
The Case of a Pool Release Initiated by a Severe Reactor Accident

A report by IRSS
20 November 2000

APPENDIX G – Loss of water by evaporation from Harris pools

1. Scenarios for water loss

CP&L has identified six scenarios for evaporative loss of water from the Harris pools.[1]

For pools A and B, CP&L has identified two heat load cases. One case assumes a "beginning of cycle" combined heat load of 25 MBTU/hr. The other case assumes a "base heat load (end of cycle)" combined heat load of 13.3 MBTU/hr. For each of these heat load cases, CP&L has considered two arrangements of gate positions. One arrangement separates pools A and B from the main fuel transfer canal.[2] The other arrangement allows pools A and B to communicate with the main fuel transfer canal.[3] In both arrangements, pools A and B and the Unit 1/4 fuel transfer canal are assumed to communicate with each other.

For pools C and D, CP&L has identified two scenarios.[4] One scenario assumes a heat load of 1 MBTU/hr, and involves only pool C; pool C and the Unit 2/3 fuel transfer canal are assumed to be in communication with each other but with no other water volume. The other scenario assumes a heat load of 15.6 MBTU/hr and involves pools C and D; pools C and D are assumed to communicate with each other and the Unit 2/3 fuel transfer canal but with no other water volume.

IRSS has identified one scenario. In this scenario, pool A is gated off from other water volumes, is loaded to its full capacity, and contains one-third of a Harris

---

[1] CP&L discovery response of 26 September 2000 to the NRC Staff (hereafter designated in Appendix G as "CP&L-September"); CP&L discovery response of 7 November 2000 to the NRC Staff (hereafter designated in Appendix G as "CP&L-November").

[2] CP&L-September.

[3] CP&L-November.

[4] CP&L-September; CP&L-November.

core about 30 days after shutdown. An assumed heat load in pool A was developed by IRSS as follows:

(a) Pool A was assumed to contain one-third of a Harris core (53 assemblies) with a decay heat of 50 kW/MTHM. Each assembly has a mass of 0.46 MTHM (see Appendix B), resulting in a 53-assembly heat load of 4.2 MBTU/hr.

(b) IRSS assumed that pools A and B are loaded to full capacity and that, other than the one-third core recently discharged, the assemblies have a decay heat represented by the base heat load (13.3 MBTU/hr) assumed by CP&L. It was further assumed that CP&L's base heat load corresponds to fully loaded pools. The PWR equivalent capacity (see Appendix B) of pool A (B) is 451 (1313) assemblies. Therefore, the base heat load in pools A and B is 13.3 x (451-53+1313)/(451+1313) = 12.9 MBTU/hr. Assuming a proportionate distribution of the base heat load, the pool A share of base heat load is 12.9 x (451-53)/(451-53+1313) = 3.0 MBTU/hr.

(c) The heat loads derived in (a) and (b) were added. Thus, the total heat load in pool A for the IRSS scenario is 4.2 + 3.0 = 7.2 MBTU/hr.

2. Calculation of water loss

CP&L has provided calculations for the time period to boiling, and the additional time period for pool dryout to the top of the racks, for each of its scenarios.[5] Using the same data and assumptions as were used by CP&L, IRSS has calculated the additional time period for the pools to dry out from the top of the racks to the base of the pool. Those calculations by IRSS involve only the residual water (base to top of rack) in each pool, because weirs at the level of the top of the racks prevent inter-volume communication.

It should be noted that the time periods calculated here by IRSS for final dryout are unrealistically short, because evaporation of water between the bottom of the fuel and the base of the pool would proceed comparatively slowly, heat transfer to the water being ineffective at that stage. This matter deserves detailed analysis.

---

[5] Ibid.

IRSS has calculated, for its own scenario, the time periods described above. This calculation used the same data and assumptions as were used by CP&L, except for heat load and gate position.

The results of these calculations are presented in Table 4, for four of CP&L's six scenarios, and for the IRSS scenario.

3. Radioactive contamination of the Harris site pursuant to exothermic oxidation reactions in pools A and B

Table 4 shows, for the scenarios assumed here, that pools A and B would dry out faster than pools C and D. Thus, exothermic oxidation reactions (see Appendix H) would begin in pools A and B while evaporative loss of water continued in pools C and D. Radioactive contamination of the site, pursuant to reactions in pools A and B, would be a factor influencing the restoration of cooling and makeup to pools C and D. (Table 4 assumes a continuing absence of cooling and makeup.)

IRSS has performed a scoping calculation of the radiation environment on the Harris site, assuming radioactive contamination of the site pursuant to reactions in pools A and B. The calculation proceeded as follows:

(a) Pools A and B were assumed to be full. Their combined PWR equivalent inventory (see Appendix B) is thus 1763 assemblies. The assemblies were assumed to contain 0.065 MCi of Cs-137 per assembly at discharge (see Appendix B). The average age of the assemblies was assumed to be 10 years. These assumptions correspond to an inventory of Cs-137, in pools A and B, of 91 MCi.

(b) Five percent of the Cs-137 inventory (91 MCi) in pools A and B was assumed to be uniformly distributed across a horizontal surface within a circle 200 meters in radius. This assumption yielded a Cs-137 loading of 36 Ci per square meter.

(c) A dose conversion factor was taken from Table VI C-2 (page C-6) of WASH-1400.[6] This table shows that the whole-body gamma groundshine dose from Cs-137 accumulated in 1 day by an unshielded person would be 1.86E+02 rem per Ci per square meter. Application of this conversion factor to the Cs-137 loading derived in (b) yielded a dose of 6,700 rem.

---

[6] NRC, 1975.

Thus, assuming the occurrence of exothermic reactions in pools A and B, this scoping calculation finds that the whole-body gamma dose from deposited Cs-137 would be 6,700 rem per day to an unshielded person. The dose rate would decline slowly over time, reflecting weathering and the decay of Cs-137 (half-life = 30 years). According to the calculation, this radiation environment would be experienced within a circle of 200 meters in radius.

The actual onsite radiation environment pursuant to exothermic reactions in pools A and B would be determined by factors including; (a) the pool loading; (b) the manner and extent of propagation of the reactions through the pools; (c) the nature of the pathways from the fuel to the atmosphere; (d) building wake effects; and (e) onsite atmospheric conditions during the release.

THE POTENTIAL FOR A LARGE ATMOSPHERIC RELEASE OF RADIOACTIVE MATERIAL FROM SPENT FUEL POOLS AT THE HARRIS NUCLEAR POWER PLANT:
The Case of a Pool Release Initiated by a Severe Reactor Accident

A report by IRSS
20 November 2000

APPENDIX H – Initiation of exothermic oxidation reactions

1. Introduction

If water is lost from a high-density fuel pool, there is a potential for exothermic oxidation reactions. The reactions of greatest interest are steam-zirconium and air-zirconium reactions. (Zirconium is the dominant constituent of fuel cladding.) If reactions develop to the point where they are self-sustaining, they will cause large releases of radioactive material from the affected fuel assemblies.

This report addresses a seven-part event sequence identified by the ASLB. At the sixth stage of that sequence, water is lost from fuel pools by evaporation. As shown in Table 4 of the main report, the water level will decline relatively slowly. One must consider how this slow decline relates to the probability that self-sustaining exothermic oxidation reactions will occur.

After the water level recedes below the top of the racks, there will be a period during which air cannot readily reach the fuel. During that period, if an exothermic reaction begins, it will be a steam-zirconium reaction.

When the water level declines to the bottom of the racks, the evaporation of water will slow down, because heat transfer from the fuel to the water will be ineffective. Eventually, the level of residual water will decline to the point where air can travel across the base of the pool and enter the rack cells from below. Thereafter, if an exothermic reaction begins, it will be an air-zirconium reaction.

The NRC Staff has been slow to understand this situation. As explained in Section 5 of the main report, for two decades the Staff has failed to consider the heat transfer implications of residual water in the pool. However, recent Staff testimony to the ACRS (see Section 4.7 of the main report) indicates that the Staff is now studying fuel heatup in situations of obstructed air flow. The presence of residual water would create such a situation.

In a situation of obstructed flow, the heatup of the fuel can be assumed, to a first approximation, to proceed adiabatically. A previous IRSS report has determined that the adiabatic heatup rate of a Harris fuel pellet would be 11Q degrees C per hour, where Q is the decay heat in kW/MTHM.[1]

2. Factors influencing the initiation of exothermic reactions

For both steam-zirconium and air-zirconium reactions, major factors influencing the initiation of exothermic reactions will be the fuel temperature and the thickness of the oxide layer at the cladding surface.[2] For the air-zirconium reaction, an NRC Staff official has suggested temperatures ranging from 600 to 900 degrees C as indicators of the onset of the reaction.[3] For the steam-zirconium reaction, the same official has suggested a temperature of 1200 degrees C as an indicator of the onset of the reaction.[4] The rationale for these suggestions is not immediately obvious, but may become apparent when the Staff publishes its supporting analysis.

Other factors influencing the initiation of exothermic reactions could be clad ballooning and rupture, and hydride effects in the cladding of high-burnup fuel.

3. A scenario for pools C and D at Harris

IRSS has examined an evaporative dryout scenario for pools C and D in which the pools have a combined heat load of 15.6 MBTU/hr (see Table 4 of the main report), in order to determine whether a steam-zirconium and/or an air-zirconium reaction would be initiated. Decay heat levels of 2.5 and 2.0 kW/MTHM are considered, which are representative of fuel aged about 5 years after discharge. Adiabatic heatup of exposed fuel (at 11Q degrees C per hour) is assumed during periods when residual water is present.

The development of this scenario proceeds as follows:

- Initial temperature of fuel — 100 degrees C
- Time for water to recede from top of — 1.4 days

---

[1] Thompson, 1999, page D-3.
[2] Tinkler, 2000.
[3] Ibid.
[4] Ibid.

fuel to base of fuel

CASE 1: fuel decay heat of 2.5 kW/MTHM

- Adiabatic temperature rise of fuel over a period of 1.4 days — 920 degrees C
- Fuel temperature when water recedes to base of fuel — 1020 degrees C

CASE 2: fuel decay heat of 2.0 kW/MTHM

- Adiabatic temperature rise of fuel over a period of 1.4 days — 740 degrees C
- Fuel temperature when water recedes to base of fuel — 840 degrees C

This scenario shows that initiation of an air-zirconium reaction is assured in both cases, if a fuel temperature of 800 degrees C is assumed to be the indicator of initiation. Consideration of the slower decline of water level in the last phase of dryout would extend the period of adiabatic heatup, and would therefore lead to a higher fuel temperature.

4. A methodology for analyzing this problem

The potential for initiation of exothermic oxidation reactions exists at any high-density pool. Thus, the NRC Staff should develop a methodology that could be applied to any pool, to assess the probability that exothermic reactions would be initiated. The methodology should:

- use state-of-the-art thermohydraulic modeling (with inclusion of radiative heat transfer) to examine fuel heatup in obstructed and unobstructed flow cases;
- allow time-dependent analysis of various scenarios for changing water level (declining, rising, static), to account for a range of situations involving evaporation, leakage or makeup;
- consider steam and air reactions;
- account for all relevant phenomena (including clad ballooning, hydride effects in cladding) that affect the development of exothermic reactions;

- model the propagation of reactions from younger to older fuel (accounting for the effects of relocation of fuel and rack materials); and
- readily allow for sensitivity studies.