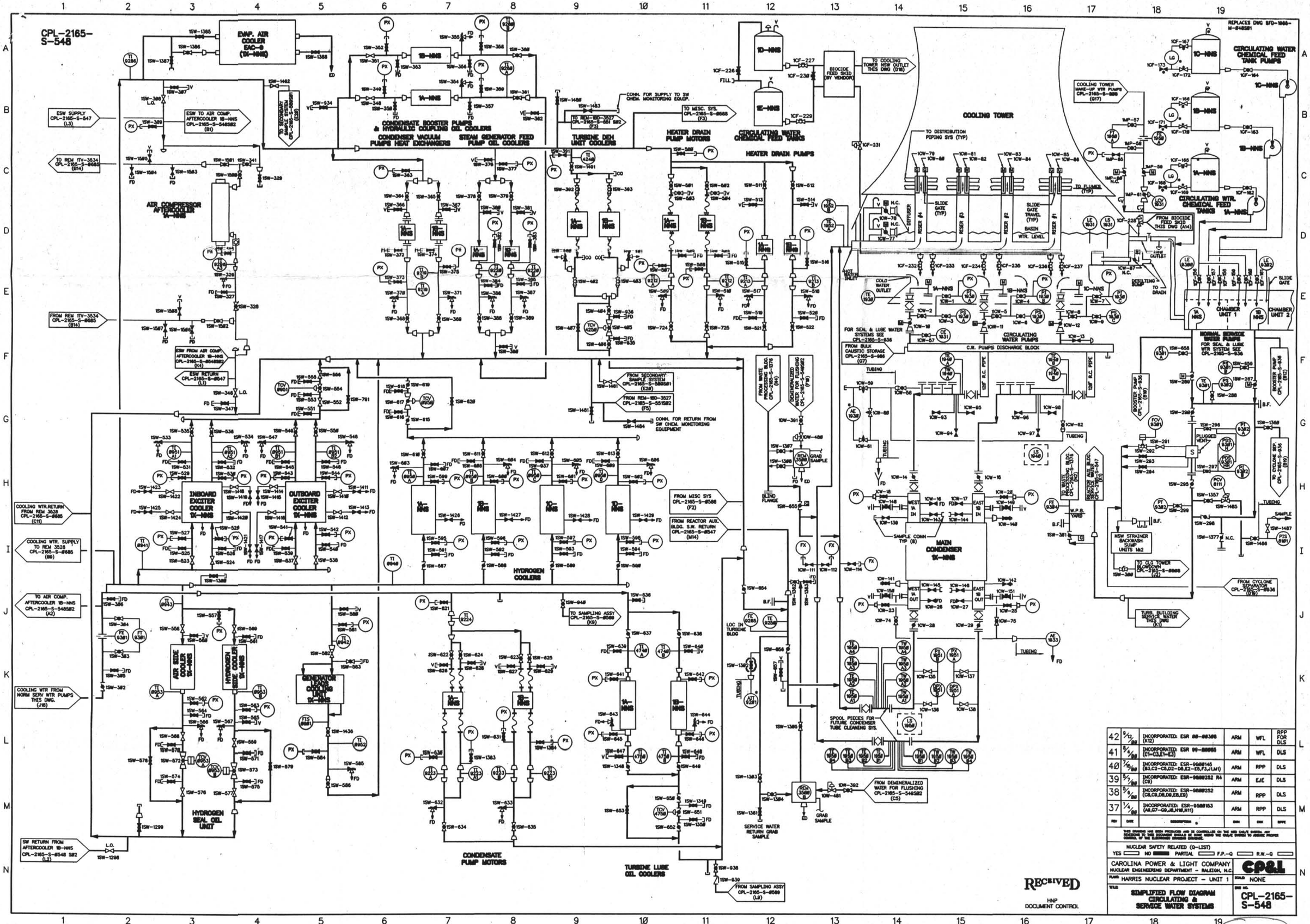

REV	DATE	DESCRIPTION	DRN	CHK	APPR
42	5/12/00	INCORPORATED: ESR 00-00368 (K12)	ARM	WFL	RPP FOR DLS
41	5/5/00	INCORPORATED: ESR 99-00065 (C1-C3,E1-E3)	ARM	WFL	DLS
40	7/6/99	INCORPORATED: ESR-9988145 (B3,C2-C8,D2-D8,E2-E8,F3,J1,M1)	ARM	RPP	DLS
39	5/5/99	INCORPORATED: ESR-9888252 R4 (C9)	ARM	EJE	DLS
38	5/6/98	INCORPORATED: ESR-9888252 (C8,C9,D8,D9,E8,E9)	ARM	RPP	DLS
37	1/4/98	INCORPORATED: ESR-9588153 (A8,G7-G9,J8,M9,N11)	ARM	RPP	DLS