Rancho Seco

Independent Spent Fuel Storage Installation

Final Safety Analysis Report
Appendix B
Standardized SAR References

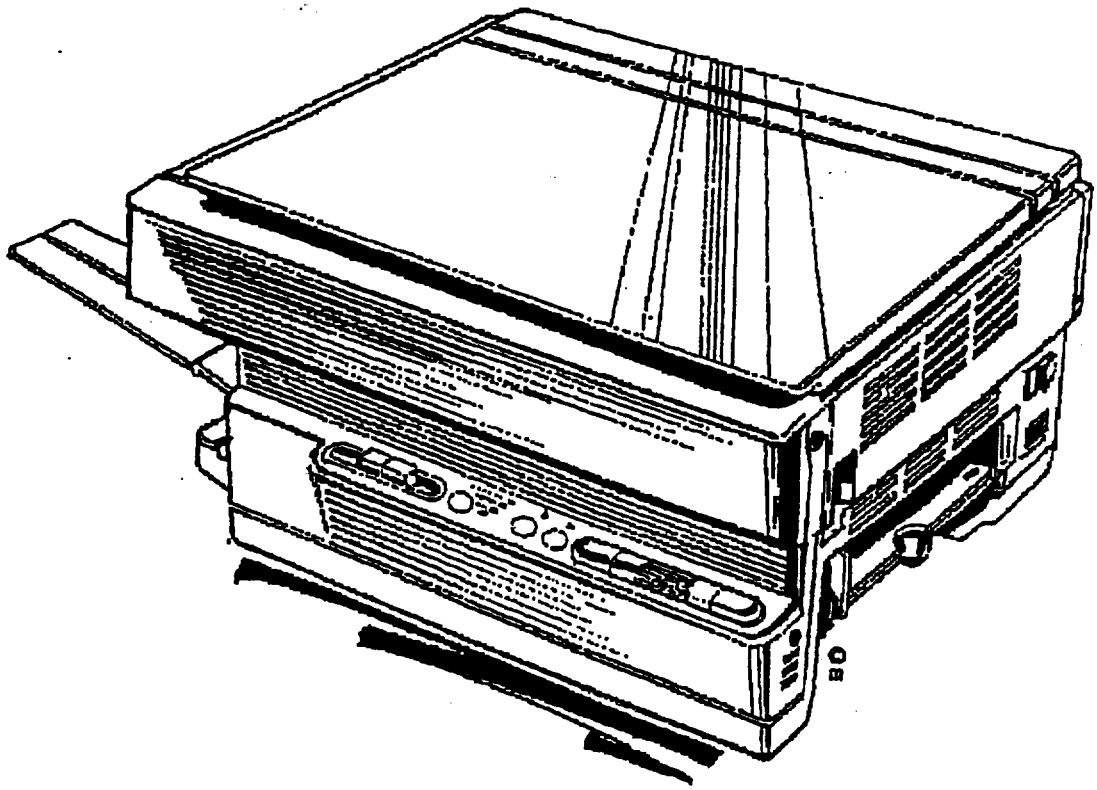

SMUD
Sacramento Municipal Utility District

1.2 General Description of Installation

1.2.1 Arrangement of Major Structures and Equipment

The NUHOMS® system provides for the horizontal, dry storage of canisterized SFAs in a concrete HSM. The cask storage system components for NUHOMS® consist of a reinforced concrete HSM and a DSC containment vessel with an internal basket assembly which holds the SFAs. The general arrangement of a typical NUHOMS® ISFSI and the system components are shown in Figure 1.1-1, Figure 1.1-2 and Figure 1.1-3.

In addition to these cask storage system components, the NUHOMS® system also utilizes transfer equipment to move the DSCs from the plant's fuel building, where they are loaded with SFAs and readied for storage, to the HSMs where they are stored. This transfer system consists of a transfer cask, a lifting yoke, a hydraulic ram system, a prime mover for towing, a transport trailer, a cask support skid, and a skid positioning system. This transfer system interfaces with the existing plant fuel pool, the cask handling crane, the site infrastructure (i.e. roadways and topography) and other site specific conditions and procedural requirements. Auxiliary equipment such as a cask/canister annulus seal, a vacuum drying system and an automatic welding system are also used to facilitate canister loading, draining, drying, inerting, and sealing operations. This SAR primarily addresses the design and analysis of the cask storage system components, including the DSC and the HSM, which are important to safety in accordance with 10CFR72. Sufficient information for the transfer system and auxiliary equipment is also included solely to demonstrate that means for safe operation of the system are provided.

Each NUHOMS® system model type is designated by NUHOMS®-XXY. The two digits (XX) refer to the number of fuel assemblies stored in the DSC, and the character (Y) is a P for PWR, or B for BWR, to designate the type of fuel stored. The number of HSMs to be erected at any one time depends on individual plant discharge rates and storage capacity needs, and will be addressed by the licensee. Examples of typical ISFSI initial capacity and future expansion provisions for PWR and BWR plants are shown in Table 1.2-1.

This SAR describes only the standardized NUHOMS® system, including the design of the DSC and the HSM, which can be utilized to accommodate internal baskets which hold 24 PWR or 52 channeled BWR fuel assemblies. The system can accommodate a wide range of plant specific conditions and spent fuel characteristics. Future baskets may be designed to hold a greater number of fuel assemblies in a canister shell assembly with the same envelope dimensions. Figure 1.2-1 shows the internal basket arrangements for various DSCs.

The outside diameter for all NUHOMS® canisters excluding the NUHOMS®-07P canisters is standardized to facilitate compatibility. This permits the design of the module and transfer system to be standardized and simplifies the interfaces for eventual off-site

shipment of intact canisters by the DOE. The overall length of the canisters may be increased or reduced to accommodate specific fuel assembly types or individual utility needs. "Standard" length PWR and BWR canisters are discussed in detail in the body of this SAR. The long-cavity PWR canister is evaluated in Appendix H of this SAR. Other cavity lengths may be included at a later time.

This SAR deals specifically with the NUHOMS® DSC and HSM which have been standardized for all plants. ISFSI capacities will vary; however, it is unlikely that a licensee would store less than the number of fuel assemblies corresponding to one year's reactor core discharge. This SAR addresses both a single HSM and HSMs which are grouped together to form arrays of any size. The standardized prefabricated HSM used to form HSM arrays is shown in Figure 1.2-2. The specific size of each HSM array will vary depending on the licensee's fuel storage requirements. This SAR provides the design description and analyses for HSM arrays ranging in size from a single standalone HSM up to a 2x10 array of 20 back-to-back side-by-side HSMs. HSM arrays larger than 2x10 are also acceptable since each module is a free-standing unit which is uncoupled structurally and thermally from the adjacent modules and the ISFSI basemat.

1.2.2 Principal Design Criteria

The principal design criteria and parameters upon which this SAR is based are summarized in Table 1.2-2.

Structural Features: The HSM is a low profile, reinforced concrete structure designed to withstand all normal condition loads as well as the abnormal condition loads created by earthquakes, tornadoes, flooding, and other natural phenomena. The HSM is also designed to withstand abnormal condition loadings postulated to occur during design basis accident conditions such as a complete loss of ventilation.

The structural features of the DSC design depend, to a large extent, on the postulated design basis transfer cask drop accident (described in Section 8.2.5). The DSC shell, the redundant closures on each end, and the DSC internals are designed to ensure that the intended safety functions of the system are not impaired following a postulated transfer cask drop accident. The limits established for equivalent decelerations due to a postulated drop accident are intended to be bounding. They envelop a range of conditions such as the transfer cask handling operations, the type of handling equipment used, the transfer cask on-site transport route, the maximum feasible drop height and orientation, and the conditions of the impacted surface. The structural safety features of the NUHOMS® system are described in Chapters 4 and 8.

Decay Heat Removal: The decay heat of the SFAs during storage in the HSM is removed from the DSC by natural circulation convection and by conduction through the HSM walls and roof. Air enters near the bottom of the HSM, circulates and rises around the DSC and exits through shielded openings near the top of the HSM. The cross-sectional areas of the

air inlet and outlet openings, and the interior flow paths are designed to optimize ventilation air flow in the HSM for decay heat removal including worst case extreme summer ambient conditions. The thermal performance features of the NUHOMS® system are described in Chapters 4 and 8.

External Atmosphere Criteria: Given the corrosion resistant properties of materials and the coatings used for construction of the NUHOMS® system components, and the warm, dry environment which exists within the HSM, no limits on the range of acceptable external atmospheric conditions are required. All components are either stainless steel, are coated with inorganic coatings, or are galvanized. Hence, all metallic materials are protected against corrosion. The interior of the HSM is a concrete surface and is void of any substance which would be conducive to the growth of any organic or vegetative matter. The design of the HSM also provides for drainage of ambient moisture which further eliminates any need for external atmospheric limitation.

The ambient temperatures selected for the design of the NUHOMS® system range from -40°F to 125°F, with a lifetime average ambient temperature of 70°F. The extreme ambient temperatures of -40°F and 125°F are expected to last for a short period of time, i.e., on the order of hours. The minimum and maximum average ambient temperatures of 0°F and 100°F are expected to last for longer periods of time, i.e., on the order of days.

1.2.3 Operating and Fuel Handling Systems

Some handling equipment and support systems within the plant needed to implement the NUHOMS® system are covered by the licensee's 10CFR50 operating license. The on-site transfer cask is designed to satisfy a range of plant specific conditions and requirements. The general operations for a typical NUHOMS® system installation are summarized in Table 1.2-3. A more detailed procedure for this sequence of operations is provided in Section 5.1. The majority of the fuel handling operations involving the DSC and transfer cask (i.e. fuel loading, draining and drying, transport trailer loading etc.) utilize procedures similar to those already in place at reactor sites for SFA shipment. The remaining operations (canister sealing, cask-HSM alignment and DSC transfer) are unique to the NUHOMS® system.

1.2.4 Safety Features

The principal safety features of a NUHOMS® ISFSI include the high integrity containment for the confinement of spent fuel materials, the axial shielding provided by the DSC, and the extensive biological shielding and protection against extreme natural phenomena provided by the massive reinforced concrete HSM. The shielding materials incorporated into the DSC and HSM designs reduce the gamma and neutron flux emanating from the SFAs so that the dose rate at the ISFSI fence is within 10CFR72 limits and is ALARA. The radiological safety features of the NUHOMS® system are described in Chapters 3 and 7.

The DSC and HSM are designed and constructed in accordance with industry accepted codes and practices for important to safety systems under an approved Quality Assurance program as described in Chapters 3 and 11. The resulting storage components have substantial margins of safety against all postulated events and readily satisfy the acceptance criteria of 10CFR72 as demonstrated by this SAR

1.2.5 Radioactive Water and Auxiliary Systems

Because of the passive nature of the NUHOMS® system, there are no radioactive waste or auxiliary systems required during normal storage conditions. There are, however, some waste and auxiliary systems required during the loading, draining, drying, backfilling, sealing and transfer operations for the DSC. The plant's radwaste systems are utilized to process water and off-gas which are purged from the DSC during draining, drying and transfer cask decon operations. Auxiliary handling systems (such as the fuel building crane, and fuel handling equipment) are also utilized during the DSC transfer operation. Additional plant support systems such as compressed air, helium, demineralized water, and AC power are also utilized. The plant interface equipment, materials and systems typically used are summarized in Table 1.2-4. The waste and auxiliary systems are further described in Chapters 3, 4, 5, and 6.

1.2.6 Principal Characteristics of the Site

The NUHOMS® system described in this SAR is readily adaptable to a wide range of ISFSI site conditions. The basic considerations for selection of a suitable NUHOMS® ISFSI site are as follows:

Site Size: The size of the site should be adequate to accommodate the desired number of prefabricated HSMs with a basemat, approach slabs, and minimum clearance zones for security, as shown in Figure 1.1-1. The site selected should include consideration of present and future storage capacity requirements.

Site Arrangement: Prefabricated HSMs can be arranged in a number of ways to minimize area exposure rates and construction material requirements. They can be placed in a single row of side-by-side modules with additional rear shield walls. Or, they can be arranged in a side-by-side, back-to-back array which eliminates the need for rear shield walls. Larger installations can use combinations of these layouts. For some sites, two single rows in a face-to-face arrangement may provide lower exposure rates away from the ISFSI since no HSM front sides face outward. HSM arrays can be expanded by adding additional HSM units. This can be done with or without relocating end shield walls.

Site Location: For ALARA and operational efficiency, it is desirable to locate the ISFSI as close as practical to the plant's fuel building to minimize transport distance and time to the ISFSI at a site with the lowest occupancy factor. The ISFSI site location should take into consideration the relative location of the plant's turbine building and the trajectory of

postulated turbine missiles. It is also desirable to minimize the elevation differences along the transfer route between the plant's fuel building and the ISFSI site. As a general rule, existing plant site roads can be shown to be adequate for the standard NUHOMS® transport trailer.

Site Soil Conditions: The site soil conditions required for a NUHOMS® ISFSI are comparable to those needed for metal or concrete vertical cask storage systems. As the basemat and foundation are not important to safety, commercial industry practices are utilized to ensure that adequate conditions of the site sub-grade are provided.

Site Flooding: It is desirable but not a requirement that the ISFSI site not be subject to flooding above the elevation of the module inlet vents for abnormal conditions and above the bottom of the canister for extreme conditions. However, the NUHOMS® ISFSI is designed to operate within the applicable acceptance limits under a worst case postulated flood height of 50 feet.

Table 1.2-1
Typical NUHOMS® ISFSI Storage Capacity
Expansion and Canister Loading Plan
(for information only)

ISFSI Construction Phase	Number of PWR/BWR Fuel Assemblies	Frequency of DSC Loadings	Frequency of HSM Installation
Single Unit Plant			
Base Plan	240/520	10/first 2 yrs.	10/first yr.
Base Plan Expansion:			
o Phase 1	240/520	2 to 3/yr.	10/3 to 5 yrs.
o Phase 2	240/520	2 to 3/yr.	10/3 to 5 yrs.
o Phase 3	240/520	2 to 3/yr.	10/3 to 5 yrs.
Total (plant life capacity for typical single unit plant)	960/2,080	40/15 yrs.	40/12 yrs.
Multiple Unit Plant			
Base Plan	480/1,040	20/first 3 yrs.	20/first yr.
Base Plan Expansion:			
o Phase 1	240/520	3 to 5/yr.	10/2 to 3 yrs.
o Phase 2	240/520	3 to 5/yr.	10/2 to 3 yrs.
o Phase 3	240/520	3 to 5/yr.	10/2 to 3 yrs.
o Phase 4	240/520	3 to 5/yr.	10/2 to 3 yrs.
o Phase 5	240/520	3 to 5/yr.	10/2 to 3 yrs.
Total (plant life capacity for typical multiple unit plant)	1,680/3,640	70/15 yrs.	7/12 yrs.

Table 1.2-2
Key Design Parameters for the Standardized NUHOMS® System

Category	Criteria or Parameter	Value	
		PWR	BWR
Fuel Assembly[1] Criteria:	Initial Uranium Content (kg/assembly)	472	198
	Initial Enrichment (U-235 equivalent)	4.0%	4.0%
	Fuel Burnup (MWD/MTU)	40,000	35,000
	Gamma Radiation Source (photons/ sec/assembly)	4.48E15 (10 year cooled)[2]	1.55E15
		8.30E15 (5 year cooled)	2.61E15
	Neutron Radiation Source (neutron/ sec./assembly)	1.55E8 (10 year cooled)[2]	8.40E7
		2.23E8 (5 year cooled)	1.01E8
	Decay Heat Power (kW/assembly)	1.00	0.37
Dry Shielded Canister:	Fuel Assemblies per DSC	24	52
	Size:		
	Overall Length	4.72m (186.0 in.)	4.97m (196.0 in.)
	Outside Diameter	1.71m (67.25 in.)	
	Shell Thickness	16mm (0.625 in.)	
	Heat Rejection (kW)	24.0	19.2
	Internal Atmosphere	Helium	Helium

(1) Enveloping design basis fuel.

(2) 10 year cooled fuel data provided for information only.

Table 1.2-2
Key Design Parameters for the Standardized NUHOMS® System
(continued)

Category	Criteria or Parameter	Value
Dry Shielded Canister: (Concluded)	Maximum Design Pressure	Conservatively Based on 100% Release of Fill Gas and 30% Release of Fission Gas
	Equivalent Cask Drop Deceleration	75g Vertical (End) and Horizontal (Side), 25g Oblique (Corner)
	Materials of Construction	Carbon Steel Internals, Carbon Steel or Steel Encased Lead Shield Plugs, and Stainless Steel Shell Assembly
	Service Life	50 Years[1]
On-Site Transfer Cask:	Payload Capacity	36,300kg (80,000 lbs.) (dry) 40,900 kg (90,000 lbs.) (wet)
	Gross Weight	90,700 kg (200,000 lbs.) (handling) 86,200 kg (190,000 lbs.)(transport)
	Surface Dose Rate	ALARA
	Equivalent Cask Drop Deceleration	75g Vertical (End) and Horizontal (Side) 25g Oblique (Corner)
	Materials of Construction	Carbon Steel, Stainless Steel, Lead, and Neutron Absorbing Material
	Service Life	50 Years

1 Expected life is much longer (hundreds of years), however, for the purpose of this generic SAR, the service life is taken as 50 years.

Table 1.2-2
Key Design Parameters for the Standardized NUHOMS® System
(concluded)

Category	Criteria or Parameter	Value
Horizontal Storage Module:	Capacity	One DSC per HSM
	Array Size	Single Module to 2xL Module Array. L may be any value.
	HSM Size:	
	Length	PWR: 5.8m (19.0 ft.) BWR: 6.0m (19.8 ft.)
	Height	4.6m (15 ft.)
	Width	2.9m (9.7 ft.)
	Surface Dose Rate	ALARA
	Heat Rejection Capacity	24.0 kW (5 yr. cooled)
	Heat Removal	Natural Circulation
	Materials of Construction	Reinforced Concrete and Structural Steel
	Service Life	50 years

Table 1.2-3
NUHOMS® System Operations Overview[1]

1. Clean and load the DSC into the transfer cask
2. Fill the DSC and cask with water and install the cask/DSC annulus seal
3. Place the transfer cask containing the DSC in the fuel pool
4. Load the spent fuel assemblies into the DSC
5. Place the top shield plug on the DSC
6. Remove the loaded cask from the fuel pool and place it in the decon area
7. Lower the water level in the DSC cavity below the shield plug
8. Place and weld the inner top cover plate to the DSC shell and perform NDE
9. Drain the water from the cask/DSC annulus (may be delayed until later)
10. Drain the water from the DSC
11. Evacuate and dry the DSC
12. Backfill the DSC with helium
13. Perform a helium leak test on the seal weld
14. Seal weld the siphon and vent port plugs and perform NDE
15. Fit-up the outer top cover plate with the DSC shell

Table 1.2-3
NUHOMS® System Operations Overview[1]
(concluded)

16. Weld the outer top cover plate to the DSC shell and perform NDE

17. Install the transfer cask top cover plate

18. Lift and downend the transfer cask onto the transport trailer

19. Ready the HSM to receive the DSC

20. Ready the cask for transport and tow the transport trailer to the HSM

21. Position the transfer cask with the HSM access opening

22. Remove the transfer cask top cover plate

23. Align and secure the transfer cask to the HSM

24. Set-up and ready the hydraulic ram for DSC transfer

25. Push the DSC into the HSM

26. Retract the ram and disengage the transfer cask from the HSM

27. Install the HSM door and the DSC axial retainer

(1) See Section 5.1 for more detailed system operation description.

Table 1.2-4
Typical Plant Equipment and Materials Used for NUHOMS®
DSC Loading, Closure, and Transfer Operations
(for information only)

1. Fuel Pool Lighting

2. Under Water Viewing Box

3. Fuel Handling Equipment

   Cask Handling Crane (≥ 100 ton capacity)

5. Slings and Lifting Devices

6. Consumables and Tools
   - Demineralized Water for Decon
   - Waterproof Tape
   - Bottled Helium
   - Low Voltage Electricity
   - Torque Wrench
   - Compressed Air
   - Temperature Probe
   - Shielding Blankets
   - Welding Materials

7. Plant Radwaste Handling System

8. Radiation Monitoring Equipment

9. Helium Leak Detector

10. Heavy Haul Towing Vehicle

11. Mobile Telescoping Crane

12. Optical Survey Equipment

13. Portable Welding Equipment

CONFIGURATION	DESCRIPTION
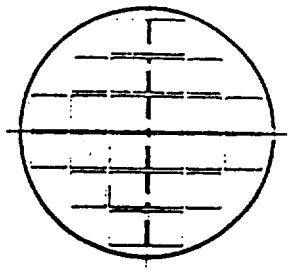	NUHOMS®-24P BASKET FOR PWR FUEL WITH NO BORATED NEUTRON ABSORBING MATERIAL AND CREDIT FOR SOLUBLE BORON
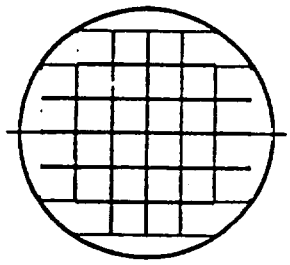	NUHOMS®-32P (FUTURE) BASKET FOR PWR FUEL WITH BORATED NEUTRON ABSORBING MATERIAL OR CREDIT FOR BURNUP
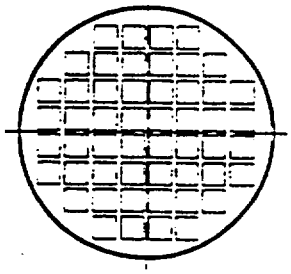	NUHOMS®-52B BASKET FOR CHANNELLED BWR FUEL WITH BORATED NEUTRON ABSORBING MATERIAL AND NO CREDIT FOR BURNUP
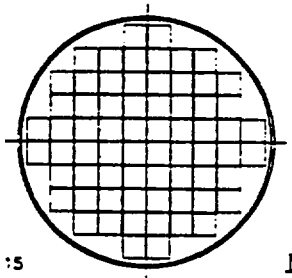	NUHOMS®-68B (FUTURE) BASKET FOR UNCHANNELLED BWR FUEL WITH BORATED NEUTRON ABSORBING MATERIAL OR CREDIT FOR BURNUP

NOTE:
Outside diameter for all canisters standardized at 67.25 inches
PWR canisters are standardized at 186.00 inches long
BWR canisters are standardized at 196.00 inches long

Figure 1.2-1
Standardized NUHOMS® Systems Canister Baskets for PWR and BWR Spent Fuel
(for information only)

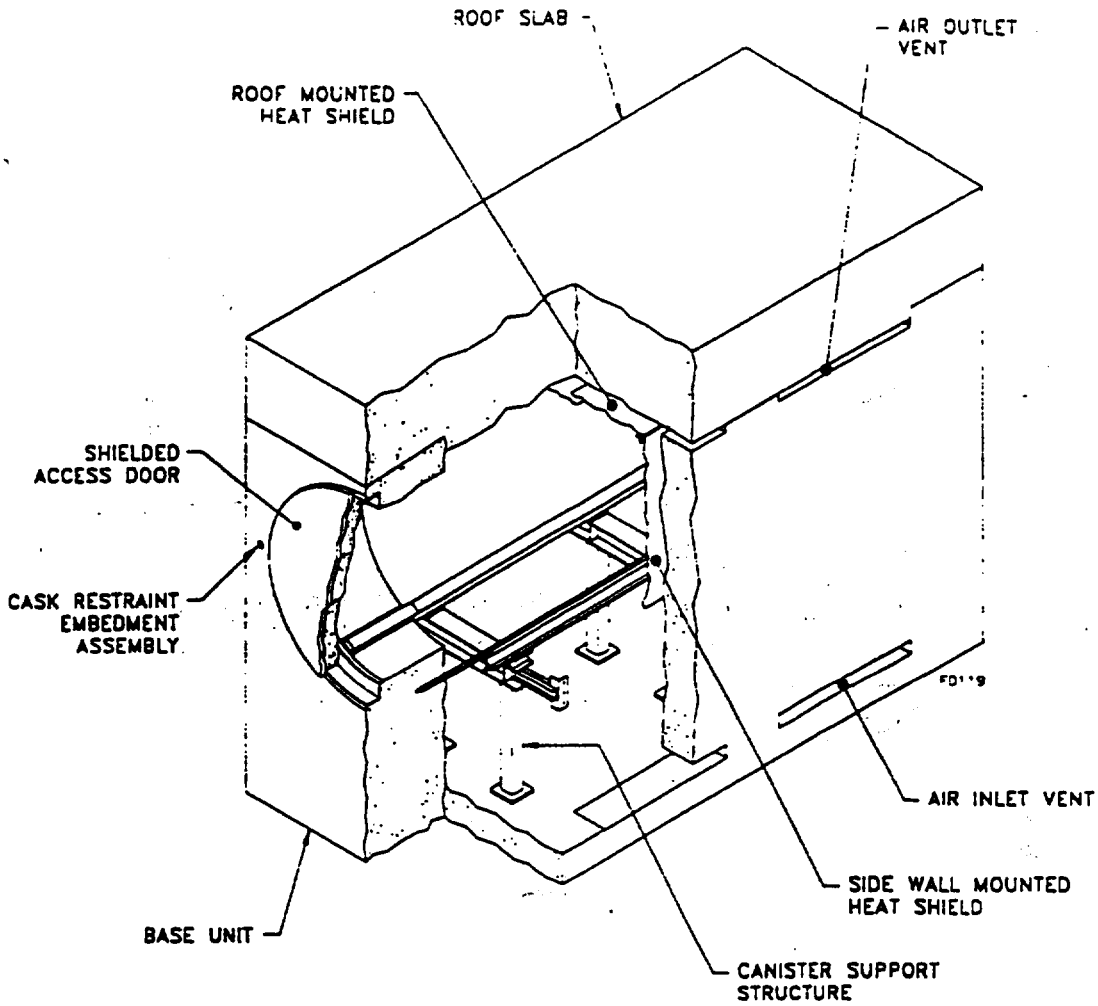

Figure 1.2-2
Prefabricated NUHOMS® Horizontal Storage Module

1.3 General Systems Description

The components, structures and equipment which make up the NUHOMS® system are listed in Table 1.3-1. The following subsections briefly describe the design features and operation of these NUHOMS® system elements.

1.3.1 Storage Systems Descriptions

1.3.1.1 Dry Shielded Canister

The principal design features of the NUHOMS® DSC are listed in Table 1.3-1 and shown in Figure 1.3-1, Figure 1.3-2 and Figure 1.3-3. Table 1.2-2 lists the capacity, dimensions and design parameters for the NUHOMS® DSC. The cylindrical shell, and the top and bottom cover plate assemblies form the pressure retaining containment boundary for the spent fuel. The DSC is equipped with two shield plugs so that occupational doses at the ends are minimized for drying, sealing, and handling operations.

The DSC has double, redundant seal welds which join the shell and the top and bottom shield plug and cover plate assemblies to form the containment boundary. The bottom end assembly containment boundary welds are made during fabrication of the DSC. The top end assembly containment boundary welds are made after fuel loading. Both top plug penetrations (siphon and vent ports) are redundantly sealed after DSC drying operations are complete. This assures that no single failure of the DSC top or bottom end assemblies will breach the DSC containment boundary. Furthermore, there are no credible accidents which could breach the containment boundary of the DSC as documented by this SAR.

The internal basket assembly contains a storage position for each fuel assembly. The criticality analysis performed for the NUHOMS®-24P DSC for PWR fuel accounts for fuel burnup or takes credit for soluble boron and demonstrates that fixed borated neutron absorbing material is not required in the basket assembly for criticality control. Fixed neutron absorbing material is used for the NUHOMS®-52B DSC for channeled BWR fuel. Subcriticality during wet loading, drying, sealing, transfer, and storage operations is maintained through the geometric separation of the fuel assemblies by the DSC basket assembly and the neutron absorbing capability of the DSC materials of construction.

Structural support for the PWR fuel and basket guide sleeves or BWR fuel and channels in the lateral direction is provided by circular spacer disk plates. Axial support for the DSC basket is provided by four support rods which extend over the full length of the DSC cavity and bear on the canister top and bottom end assemblies.

1.3.1.2 Horizontal Storage Module

An isometric view of a prefabricated HSM utilized to form an array of HSMs is shown in Figure 1.2-2. Each HSM provides a self-contained modular structure for storage of spent fuel canisterized in a DSC as illustrated in Figure 1.3-4. The HSM is constructed from reinforced concrete and structural steel. The thick concrete roof and walls of the HSM provide substantial neutron and gamma shielding. Contact doses for the HSM are designed to be ALARA.

The nominal thickness of the HSM roof and exterior walls of an HSM array for biological shielding is about three feet. Separate shielding walls are utilized at the end of a module row to provide the required thickness. Similarly, an additional shield wall is used at the rear of the module if the ISFSI is configured as single module rows. Sufficient shielding between HSMs in an HSM array to prevent scatter in adjacent HSMs during loading and retrieval operations is provided by thick concrete side walls. The inlet and outlet vents are designed to take advantage of the self-shielding of adjacent HSMs.

The HSM provides a means of removing spent fuel decay heat by a combination of radiation, conduction and convection. Ambient air enters the HSM through ventilation inlet openings in the lower side walls of the HSM and circulates around the DSC and the heat shield. Air exits the HSM through outlet openings in the upper side walls of the HSM. Adjacent modules are spaced to provide a ventilation flow path between modules.

Decay heat is rejected from the DSC to the HSM air space by convection and then is removed from the HSM by a natural circulation air flow. Heat is also radiated from the DSC surface to the heat shield and HSM walls where again the natural convection air flow and conduction through the walls removes the heat. Figure 1.3-5 shows the ventilation flow paths for the DSC and the HSM. The passive cooling system for the HSM is designed to assure that peak cladding temperatures during long term storage remain below acceptable limits to ensure fuel cladding integrity.

The NUHOMS® system HSMs provide an independent, passive system with substantial structural capacity to ensure the safe dry storage of spent fuel assemblies. To this end, the HSMs are designed to ensure that normal transfer operations and postulated accidents or natural phenomena do not impair the DSC or pose a hazard to plant personnel.

The HSMs are constructed on a load bearing foundation which consists of a reinforced concrete basemat on compacted engineered fill. The HSMs are located in a fenced, secured location with controlled access. The necessary civil work required to prepare the ISFSI site is the same as that for an ISFSI utilizing vertical storage casks.

1.3.2 Transfer Systems Descriptions

1.3.2.1 On-Site Transfer Cask

The transfer cask used in the NUHOMS® system provides shielding and protection from potential hazards during the DSC closure operations and transfer to the HSM. The standard transfer cask documented in this SAR has a gross weight of less than 90.7 Te (100 tons) and is limited to on-site use under 10CFR72. The licensee may also elect to utilize a future transfer cask having a gross weight of about 113.4 Te (125 tons) which can be used on-site under 10CFR72, but is also suitable for future off-site shipment of intact NUHOMS® canisters under 10CFR71. Where applicable, any other NRC licensed NUHOMS® transfer or transportation cask is acceptable for use with the standardized NUHOMS® system subject to an application specific safety evaluation.

The transfer cask for the NUHOMS® system, has a 4.75m (186.75 inches) long inner cavity, a 1.73m (68 inches) inside diameter and a maximum payload capacity of 40,900 kg (90,000 pounds) wet and 36,300 kg (80,000 pounds) dry. A cask collar is used to extend the transfer cask cavity length by .25m (10 inches) for use with the longer DSCs for BWR fuel. Alternatively, a transfer cask with a longer cavity length (no cask collar) may be used for DSCs with BWR fuel and this cask may also be used with a cask spacer to load PWR DSCs. The transfer cask is designed to meet the requirements of 10CFR72 for on-site transfer of the DSC from the plant's fuel pool to the HSM. As shown in Figure 1.3-6, the transfer cask is constructed from two concentric cylindrical steel shells with a bolted top cover plate and a welded bottom end assembly. The annulus formed by these two shells is filled with cast lead to provide gamma shielding. The transfer cask also includes an outer steel jacket which is filled with a hydrogen rich solid material or water for neutron shielding. The top and bottom end assemblies also incorporate a solid neutron shield material.

The transfer cask is designed to provide sufficient shielding to ensure that dose rates are ALARA. Two lifting trunnions are provided for handling the transfer cask in the plant's fuel building using a lifting yoke and an overhead crane. Lower support trunnions are provided on the cask for pivoting the transfer cask from/to the vertical and horizontal positions on the support skid/transport trailer. A cover plate is provided to seal the bottom hydraulic ram access penetration of the cask during fuel loading.

1.3.2.2 Transfer Equipment

Transport Trailer: The NUHOMS® transport trailer consists of a heavy industrial trailer with a payload capacity of 113.4 Te (125 tons). The trailer transports the cask support skid and the loaded transfer cask between the plant's fuel building and the ISFSI. The trailer is designed to ride as low to the ground as possible to minimize the HSM height and the transfer cask height during transport and DSC transfer operations. Figure 1.3-7 shows the

transfer cask height during transport and DSC transfer operations. Figure 1.3-7 shows the heavy haul industrial trailer used with the standardized NUHOMS® system. The trailer is equipped with four hydraulic leveling jacks to provide vertical travel for alignment of the cask with the HSM. The trailer is towed by a conventional heavy haul truck tractor or other suitable prime mover. The nominal trailer bed height during canister transfer to the HSM is such that the transfer cask is typically not elevated more than 1.68m (5'-6") above grade as measured from the lowest point on the cask. This is well below the 2.0m (80 inch) drop height used as the accident drop design basis of the cask and canister.

Cask Support Skid: The NUHOMS® system cask support skid is similar in design and operation to other transportation cask skids used for shipment of fuel. The key differences are:

1. There is no ancillary equipment mounted on the skid.

2. The skid is mounted on a surface with sliding support bearings and hydraulic positioners to provide alignment of the cask with the HSM. Brackets with locking bolts are provided to prevent movement during trailer towing.

3. The hydraulic ram is mounted on the skid or, as an option, the ram can be set-up using a frame structure bolted to the cask bottom and a rear support tripod.

4. The cask support skid is mounted on a low profile heavy haul industrial trailer.

The cask support skid utilized for the standardized NUHOMS® system is illustrated in Figure 1.3-8. The plant's fuel building crane is used to lower the cask onto the support skid which is secured to the transport trailer. Specific details of this operation and the fuel building arrangement are covered by the provisions of plant's 10CFR50 operating license. The cask support skid, when mounted on the transport trailer, is approximately 1.5m (5'-0") high at the trunnion supports x 3.2m (10'-6") wide x 7.3m (24'-0") long. With the ram in place, the overall length of the skid and ram is approximately 8.2m (27'). During transport operations the bottom of the transfer cask is approximately 1.5m (5 feet) above the ground surface when secured to the support skid/transport trailer as discussed above.

Hydraulic Ram: The hydraulic ram system consists of a hydraulic cylinder with a capacity and a reach sufficient for DSC loading and unloading to and from the HSM. The hydraulic ram has a capacity of 360 kN (80,000 lbf) and a piston stroke of 6.1m to 6.5m(20 to 21.5 feet). Figure 1.3-9 shows a typical NUHOMS® hydraulic ram system. The design of the ram support system provides a direct load path for the hydraulic ram reaction forces during DSC transfer. The system uses an adjustable rear ram support for alignment at the rear of the ram, and a fixed set of trunnion towers as a front support. The design provides positive alignment of the major components during DSC transfer. During DSC transfer the ram

reaction forces are transferred through the frame support into the transfer cask, and from the cask to the HSM through the cask restraints.

1.3.3 System Operation

The primary operations (in sequence of occurrence) for the NUHOMS® system are:

1. Cask Preparation
2. DSC Preparation
3. Placement of DSC in Cask
4. Water Filling and DSC/Cask Annulus Sealing
5. Cask Lifting and Placement in Fuel Pool
6. DSC Spent Fuel Loading
7. DSC Top Shield Plug Placement
8. Cask Lifting from Pool and Cask/DSC Annulus Draining
9. Inner DSC Seal Weld Installation
10. DSC Drying and Helium Backfilling
11. Outer DSC Seal Weld Installation
12. Cask Cover Plate Installation
13. Placement of Cask on Transport Skid/Trailer
14. Transport of Loaded Cask to HSM
15. Cask/HSM Preparation and Alignment
16. Transfer of DSC into HSM
17. Storage
18. Retrieval

These operations are shown schematically in Figure 1.3-10 and are described in the following paragraphs. The descriptions are intended to be generic. Plant specific requirements may affect these operations and are to be addressed by the licensee.

Cask Preparation: Cask preparation includes exterior washdown and interior decontamination. These operations are performed on the decontamination pad/pit outside the fuel pool area. The operations are similar to those for a shipping cask which are performed by plant personnel using existing procedures.

DSC Preparation: The internals and externals of the DSC are thoroughly washed or wiped down. This ensures that the newly fabricated DSC will meet existing plant cleanliness requirements for placement in the spent fuel pool.

Placement of DSC in Cask: The empty DSC is inserted into the transfer cask. Proper alignment is assured by visual inspection of the alignment match marks on the DSC and cask.

Fill with Water and Seal Cask/DSC Annulus: The transfer cask and DSC inside the cask are filled with water. This prevents an in-rush of pool water as they are placed in the pool. The DSC/cask annulus is sealed prior to placement in the pool. This prevents contamination of the DSC outer surface by the pool water.

Cask Lifting and Placement in Pool: The water-filled transfer cask, with the DSC inside, is then lifted into the fuel pool and positioned in the cask laydown area. The liquid neutron shield may be drained to meet hook weight limitations.

DSC Spent Fuel Loading: Spent fuel assemblies are placed into the DSC basket. This operation is identical to that presently used at plants for shipping cask loading.

DSC Top Shield Plug Placement: This operation consists of placing the DSC top shield plug onto the DSC using the plant's crane.

Lifting Cask from Pool: The loaded cask is lifted out of the pool and placed (in the vertical position) on the drying pad in the decon pit. This operation is similar to that used for shipping cask handling operations. Liquid neutron shield, if drained, shall be filled.

Inner DSC Sealing: Using a pump, the water level in the DSC is lowered below the inside surface of the DSC top shield plug. The inner top cover plate is put in place and a seal weld is made between the edge of the cover plate and the DSC shell. This weld provides the inner seal for the DSC.

DSC Drying and Backfilling: The initial blow-down of the DSC is accomplished by pressurizing the vent port with nitrogen, helium or shop air. The remaining liquid water in the DSC cavity is forced out the siphon tube and routed back to the fuel pool or to the plant's liquid radwaste processing system, as appropriate. The DSC is then evacuated to remove the residual liquid water and water vapor in the DSC cavity. When the system pressure has stabilized, the DSC is backfilled with helium and re-evacuated. The second backfill and evacuation ensures that the reactive gases remaining are less than 0.25% by volume. After the second evacuation, the DSC is again backfilled with helium and slightly pressurized. A helium leak test of the inner seal weld is then performed. The helium pressure is then reduced, the helium lines removed, and the drain and fill port penetrations seal welded closed.

Outer DSC Sealing: After helium backfilling, the DSC outer top cover plate is installed by placing a second seal weld between the cover plate and the DSC shell. Together with the inner seal weld, this weld provides a redundant seal at the upper end of the DSC. The lower end has redundant seal welds which are installed and tested during fabrication.

Cask/DSC Annulus Draining and Top Cover Plate Placement: The transfer cask is drained, removing the demineralized water from the cask/DSC annulus. A swipe is then taken over the DSC exterior at the DSC top cover plate and the upper portion of the DSC shell. Clean demineralized water is flushed through the cask/DSC annulus to remove any contamination left on the DSC exterior as required. The transfer cask top cover plate is then put in place using the plant's crane. The cask lid is bolted closed for subsequent handling operations.

Placement of Cask on Transport Trailer Skid: The transfer cask is then lifted onto the cask support skid. The plant's crane is used to downend the cask from a vertical to a horizontal position. The cask is then secured to the skid and readied for the subsequent transport operations.

Transport of Loaded Cask to HSM: Once loaded and secured, the transport trailer is towed to the ISFSI along a predetermined route on a prepared road surface. Upon entering the ISFSI secured area, the transfer cask is generally positioned and aligned with the particular HSM in which a DSC is to be transferred.

Cask/HSM Preparation: At the ISFSI with the transfer cask generally positioned in front of the HSM, the cask top cover plate is removed. The transfer trailer is then backed into close proximity with the HSM and the HSM door is removed. The skid positioning system is used for the final alignment and docking of the cask with the HSM.

Loading DSC into HSM: After final alignment of the transfer cask, HSM, and hydraulic ram: the DSC is pushed into the HSM by the hydraulic ram (located at the rear of the cask).

Storage: After the DSC is inside the HSM, the hydraulic ram is disengaged from the DSC and withdrawn through the cask. The transfer trailer is pulled away, the HSM shielded access door installed and the DSC axial retainer inserted. The DSC is now in safe storage within the HSM.

Retrieval: For retrieval, the transfer cask is positioned and the DSC is transferred from the HSM to the cask. The hydraulic ram is used to pull the DSC into the cask. All transfer operations are performed in the same manner as previously described. Once back in the cask, the DSC with its SFAs is ready for return to the plant fuel pool or for direct off-site shipment to a repository or another storage location.

1.3.4 Arrangement of Storage Structures

The DSC, containing the SFAs, is transferred to, and stored in, the HSM in the horizontal position. Multiple HSMs are grouped together to form arrays whose size is determined to meet plant-specific needs. Arrays of HSMs are arranged within the ISFSI site on a concrete pad(s) with the entire area enclosed by a security fence. Individual HSMs are arranged adjacent to each other, spaced a small distance apart for ventilation. The decay heat for each HSM is primarily removed by internal natural circulation flow and not by conduction through the HSM walls. Figure 1.3-11, Figure 1.3-12 and Figure 1.3-13 show typical layouts for NUHOMS® ISFSIs which are capable of modular expansion to any capacity. The parameters of interest in planning the installation layout are the configuration of the HSM array and an area in front of each HSM to provide adequate space for backing and aligning the transport trailer.

There is no explicit requirem. regarding the sequence of HSM loading. It is expected that all loading sequences will leave one or more HSMs vacant for a period of time prior to loading.

Table 1.3-1
Components, Structures and Equipment for the Standardized NUHOMS® System

Dry Shielded Canister

Internal Basket Assembly:

Guide Sleeves	(24 for PWR fuel basket only)
Fixed Neutron Absorbers	(88 for BWR fuel only)
Spacer Disks	(8 for PWR fuel) (9 for BWR fuel)
Support Rods	(4)

Cylindrical Shell

Shield Plugs (top and bottom)

Inner and Outer Cover Plates (top and bottom)

Drain and Fill Port

Grapple Ring

Horizontal Storage Module

Reinforced Concrete Walls, Roof, and Floor

DSC Support Structure

DSC Axial Retainer

Cask Docking Collar and Cask Restraint Eyes

Heat Shield

Shielded Access Door

Ventilation Air Openings (four inlets, four outlets)

Table 1.3-1
Components, Structures and Equipment for the Standardized NUHOMS® System
(concluded)

On-Site Transfer Cask

- Cask Structural Shell Assembly
- Bolted Top Cover Plate
- Upper Lifting Trunnions
- Lower Support Trunnions
- Lead Gamma Shielding
- Inner Liner
- Outer Jacket
- Neutron Shielding
- Ram Access Penetration Cover Plate

Transport Trailer

- Heavy-Haul Industrial Trailer
- Cask Support Skid
- Skid Positioning System

Hydraulic Ram System

- Hydraulic Cylinder and Supports
- Hydraulic Power Supply
- Grapple Assembly

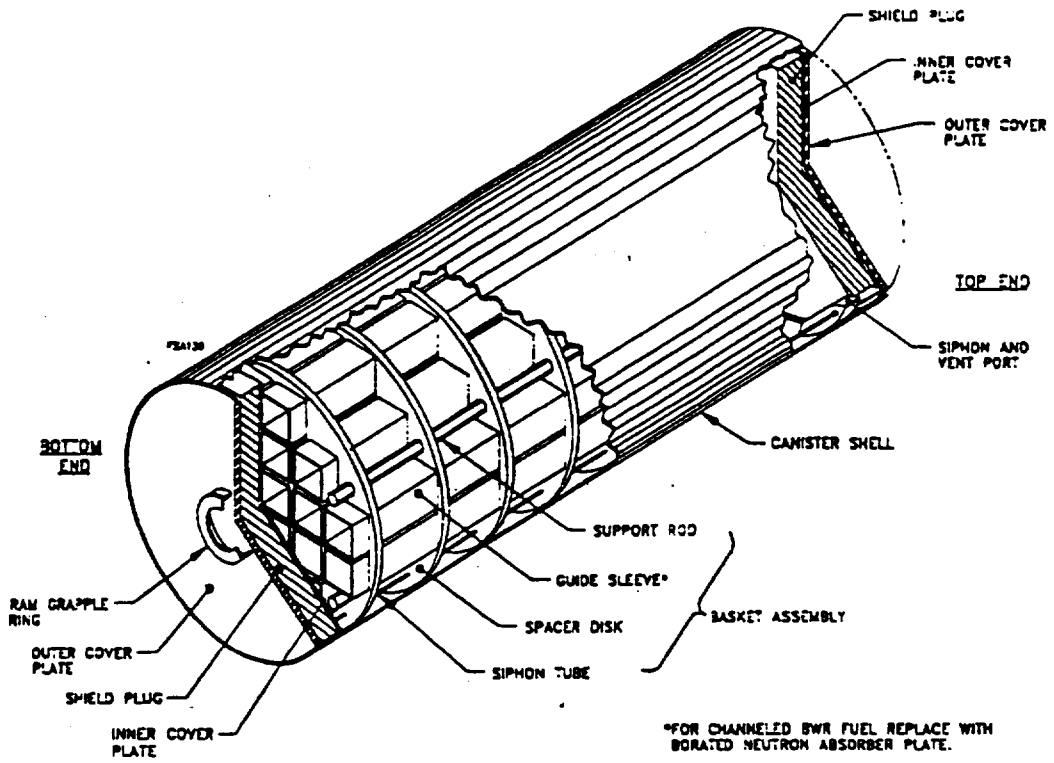

Figure 1.3-1
NUHOMS® Dry Shielded Canister Assembly Components

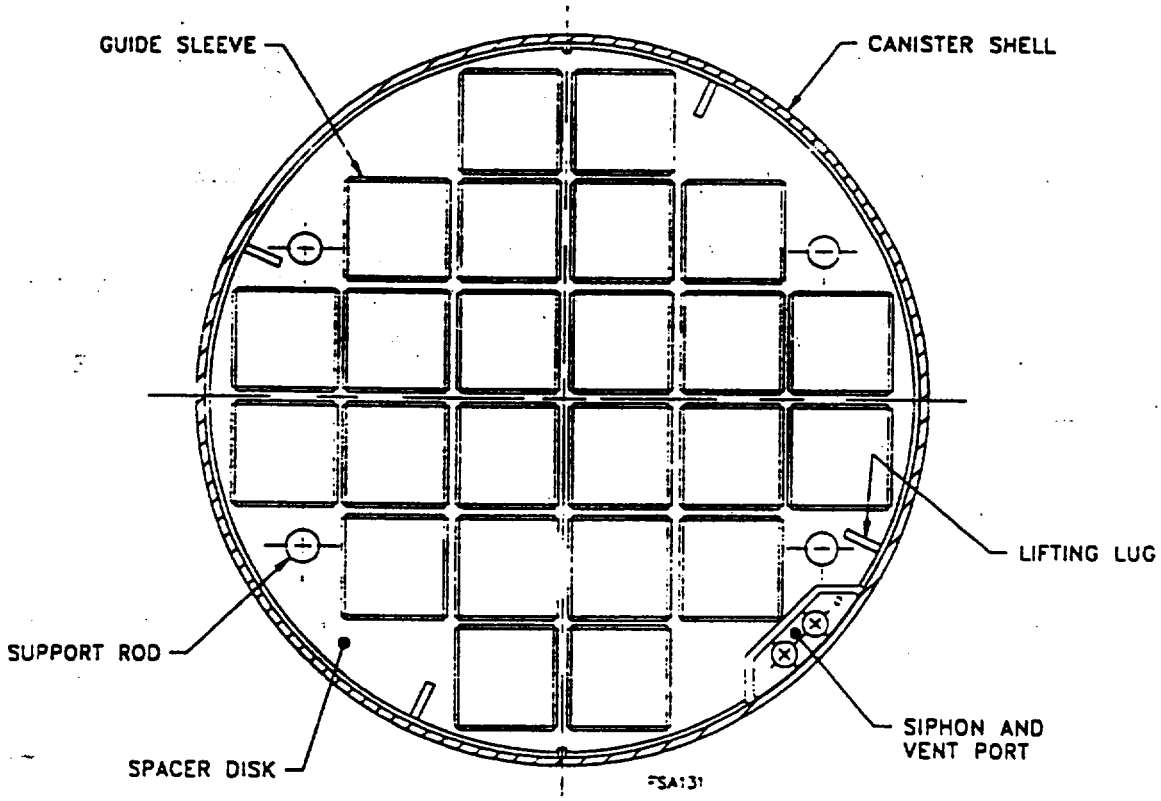

Figure 1.3-2
NUHOMS®-24P Dry Shielded Canister Cross-Section

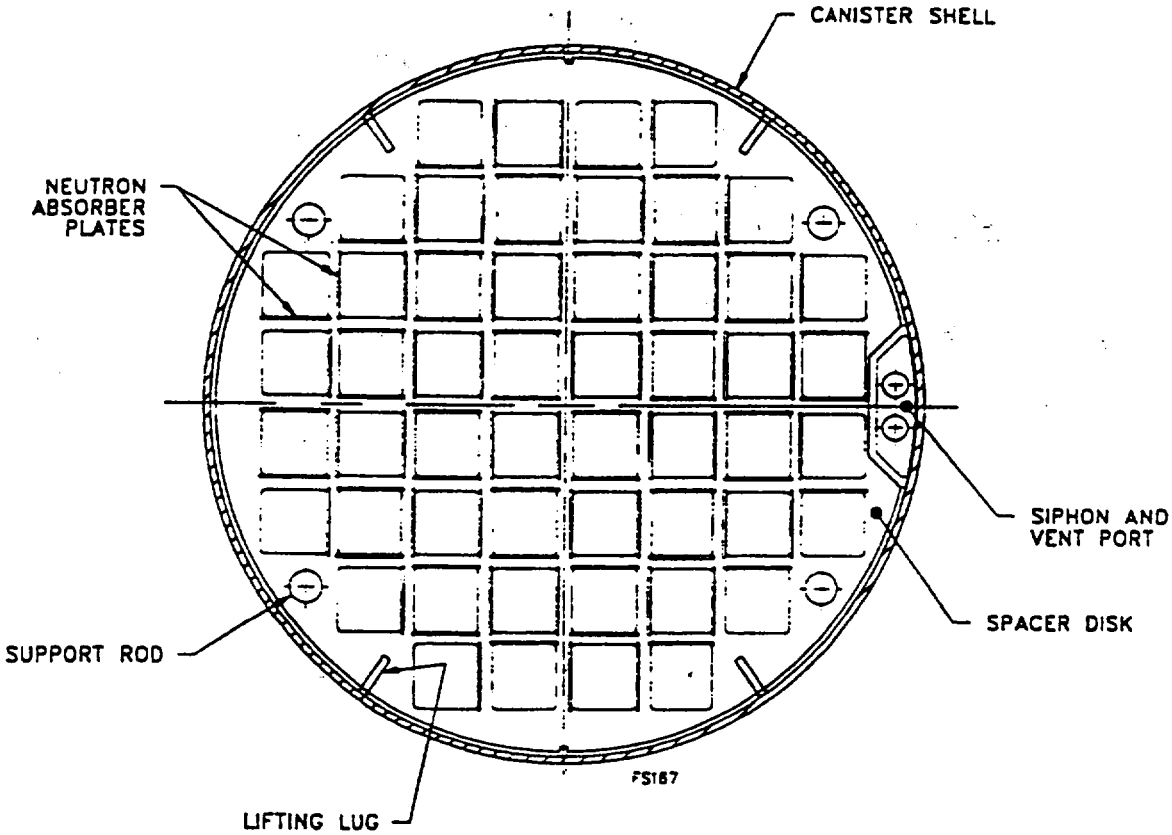

Figure 1.3-3
NUHOMS®-52B Dry Shielded Canister Cross-Section

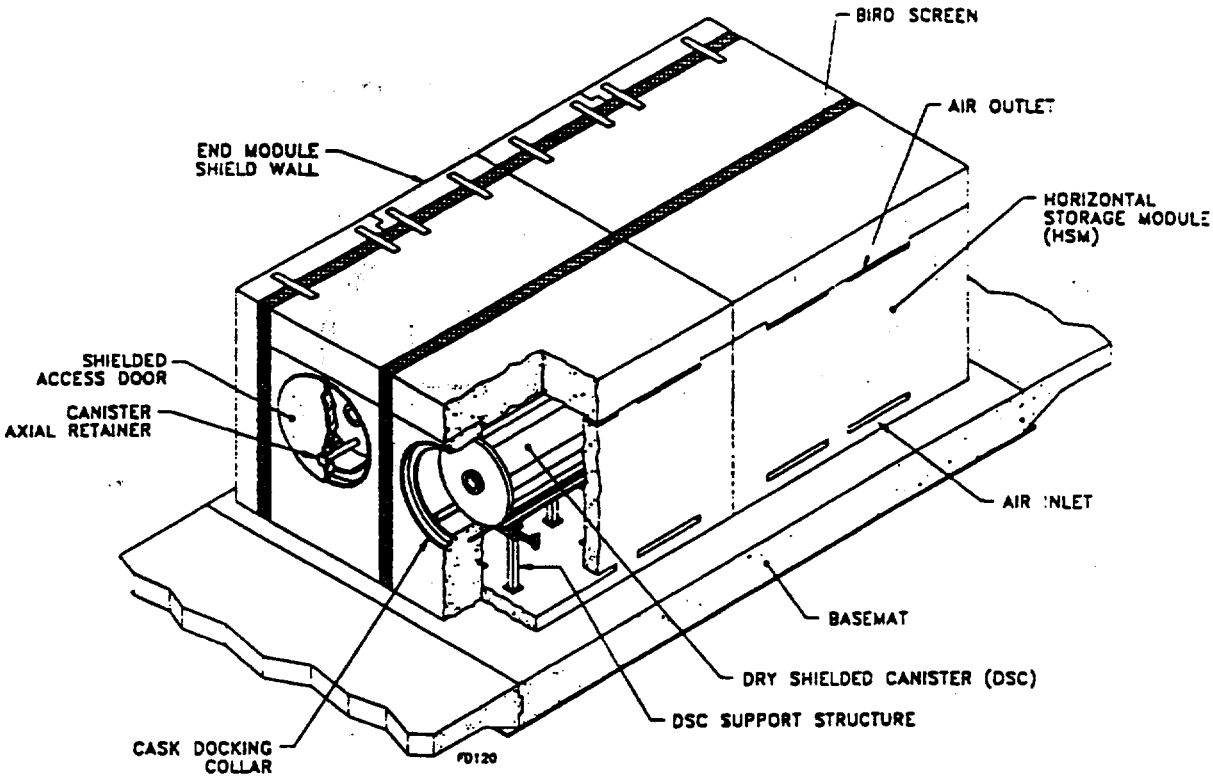

Figure 1.3-4
NUHOMS® Horizontal Storage Module Arrangement

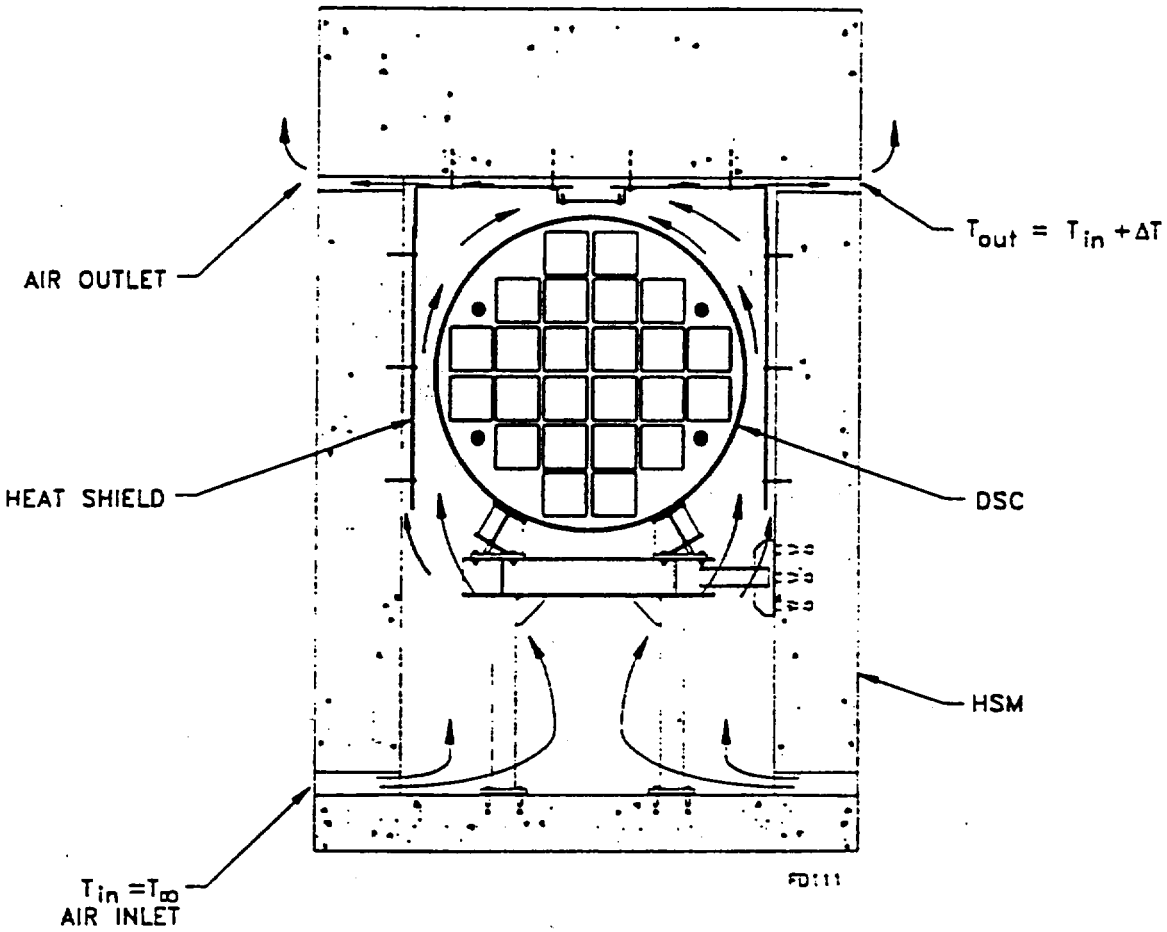

Figure 1.3-5
HSM Ventilation Air Flow Diagram

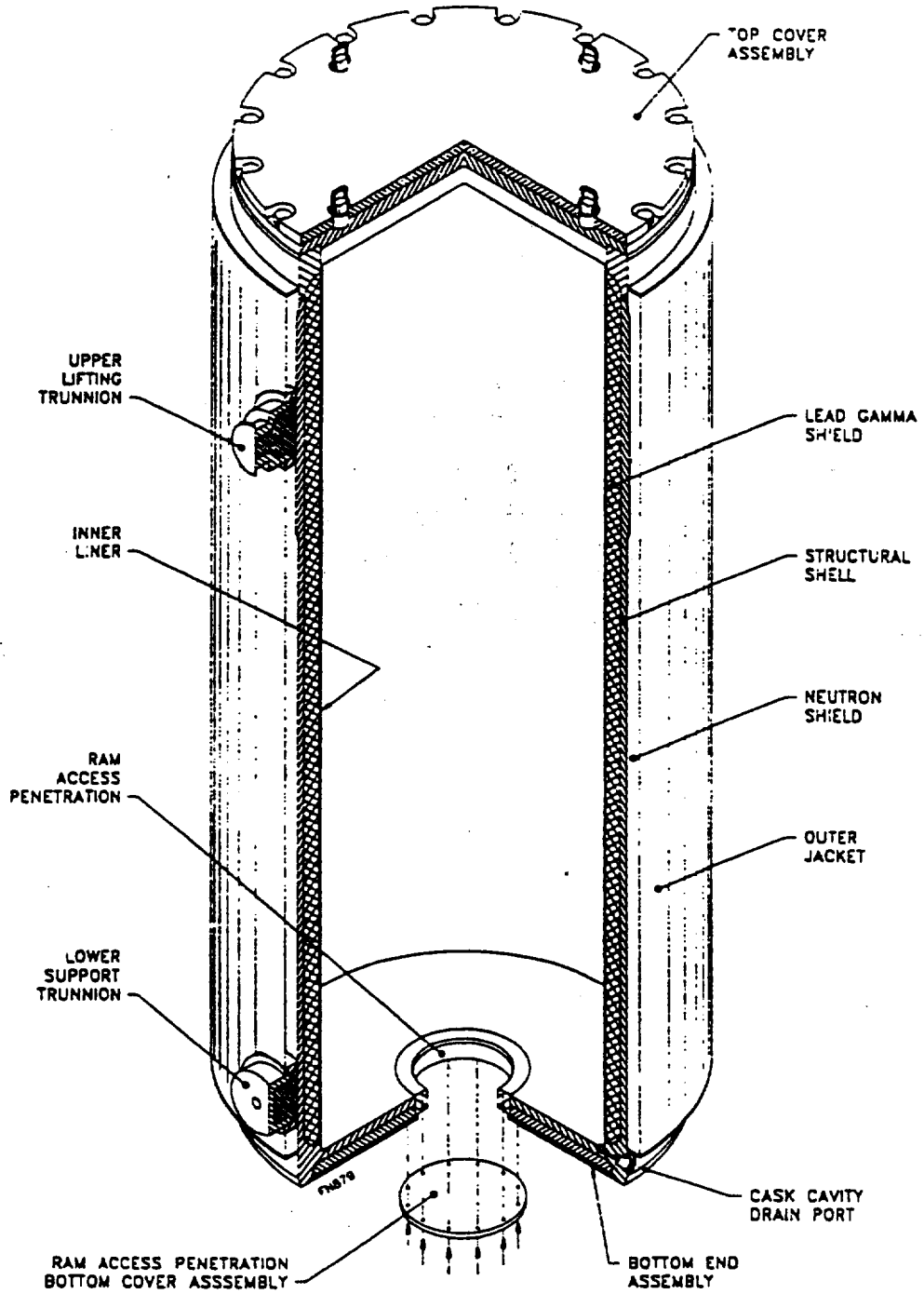

Figure 1.3-6
NUHOMS® On-Site Transfer Cask

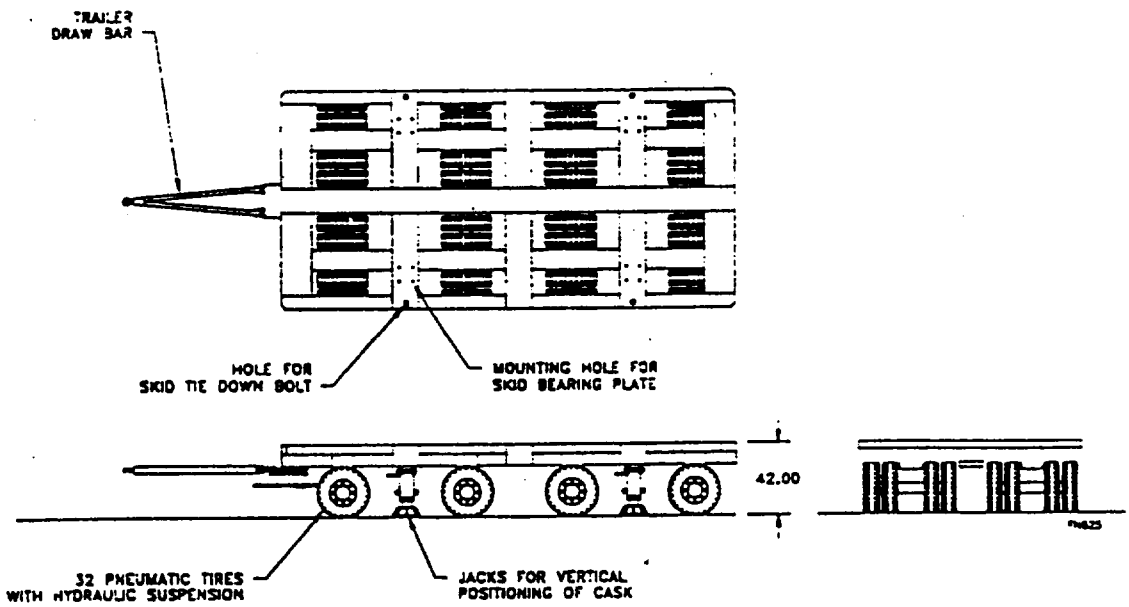

Figure 1.3-7
Transport Trailer for the NUHOMS® System

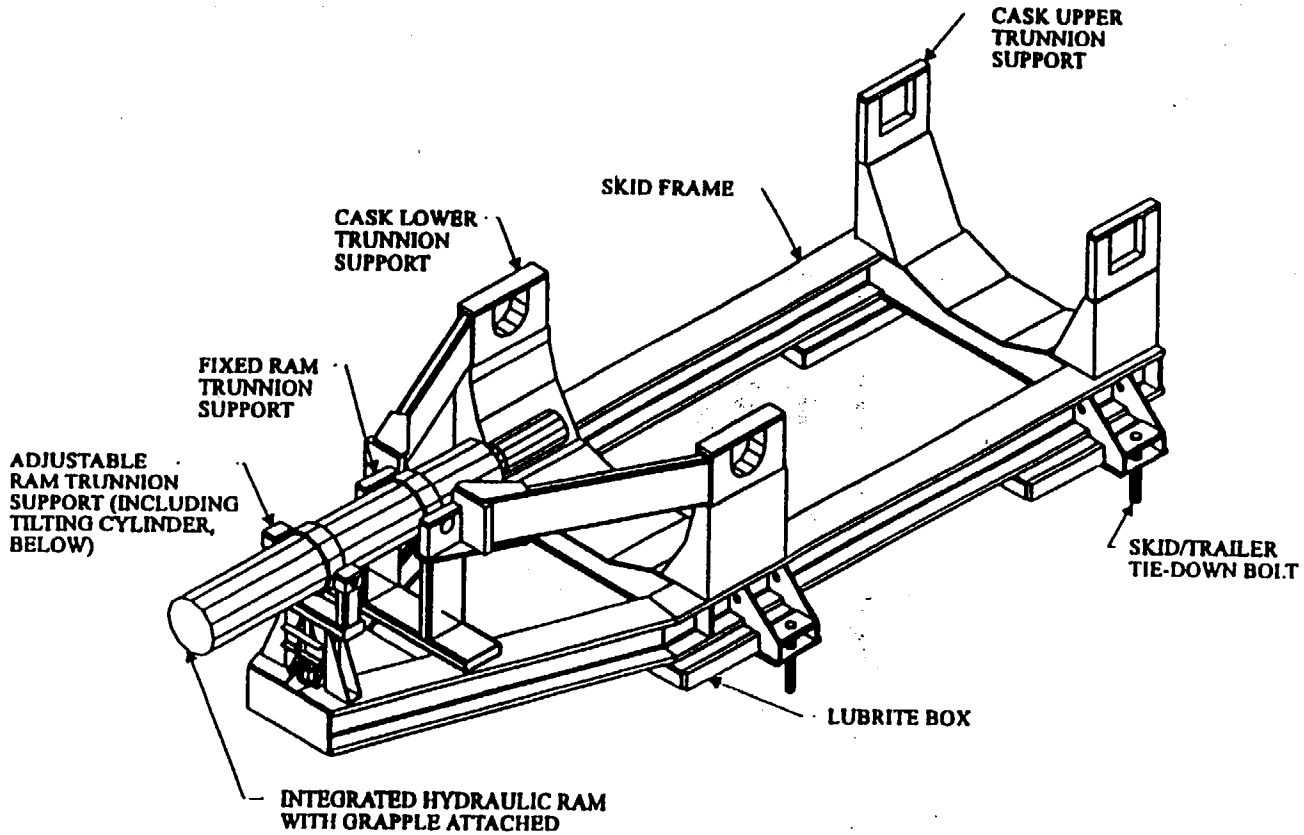

Figure 1.3-8
Cask Support Skid for the NUHOMS® System

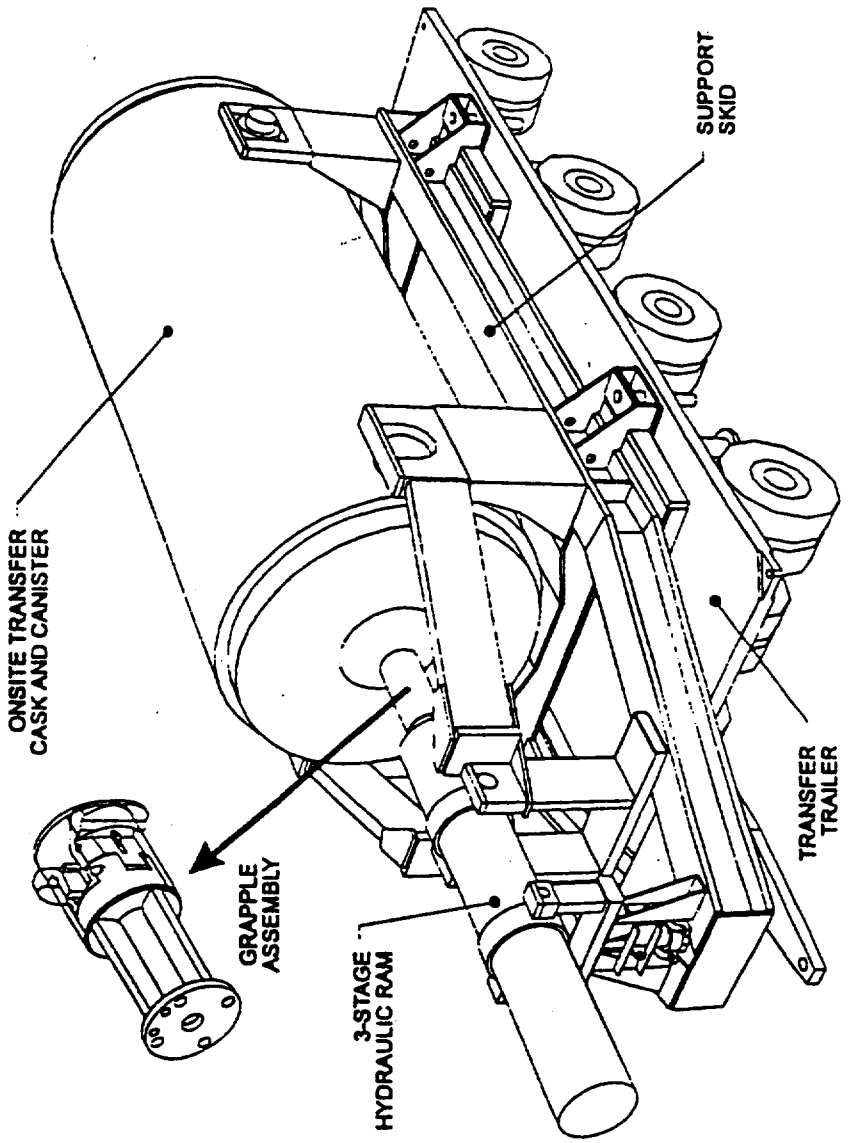

Figure 1.3-9
Hydraulic Ram System for NUHOMS®

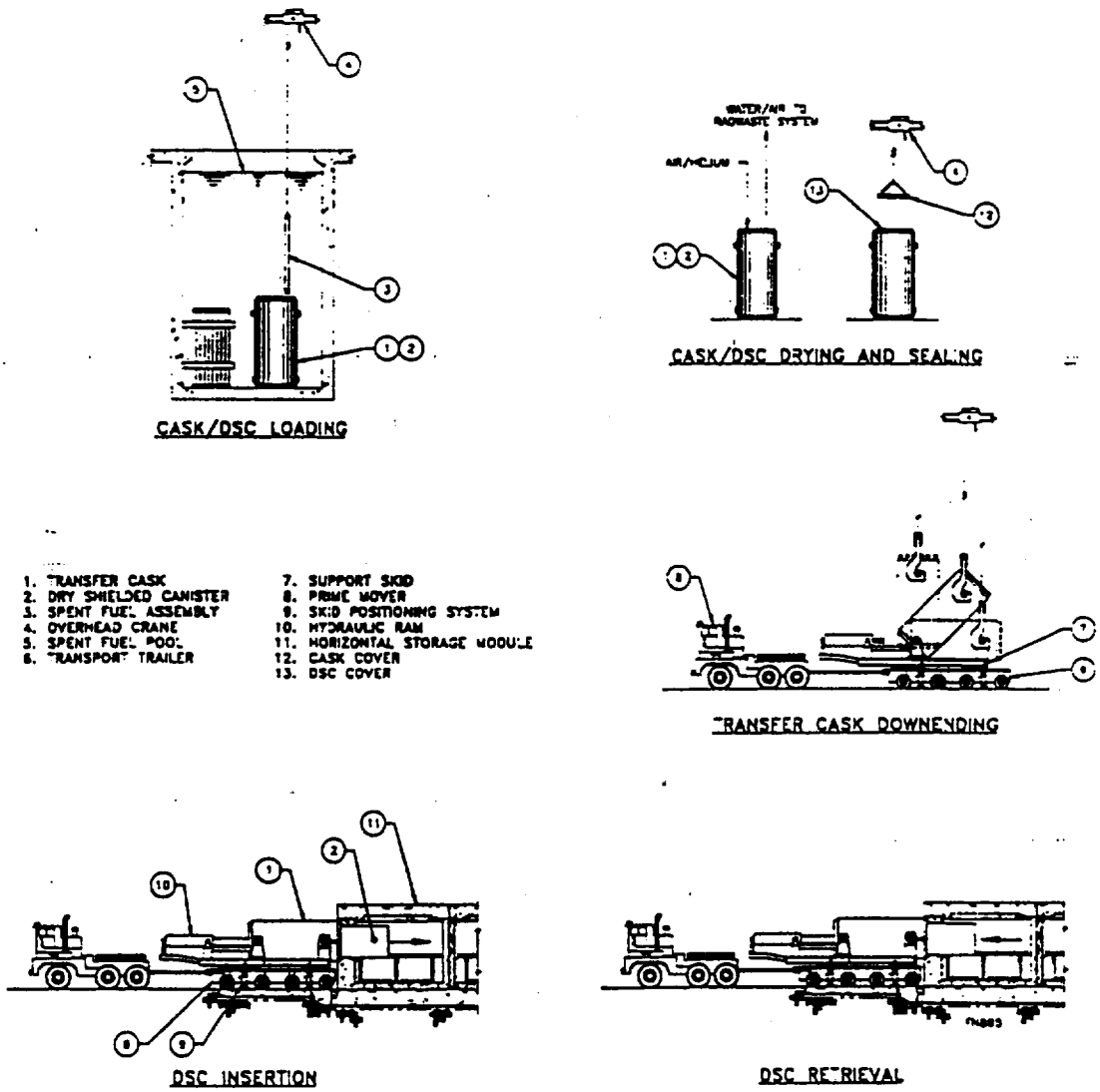

Figure 1.3-10
NUHOMS® System Operational Overview

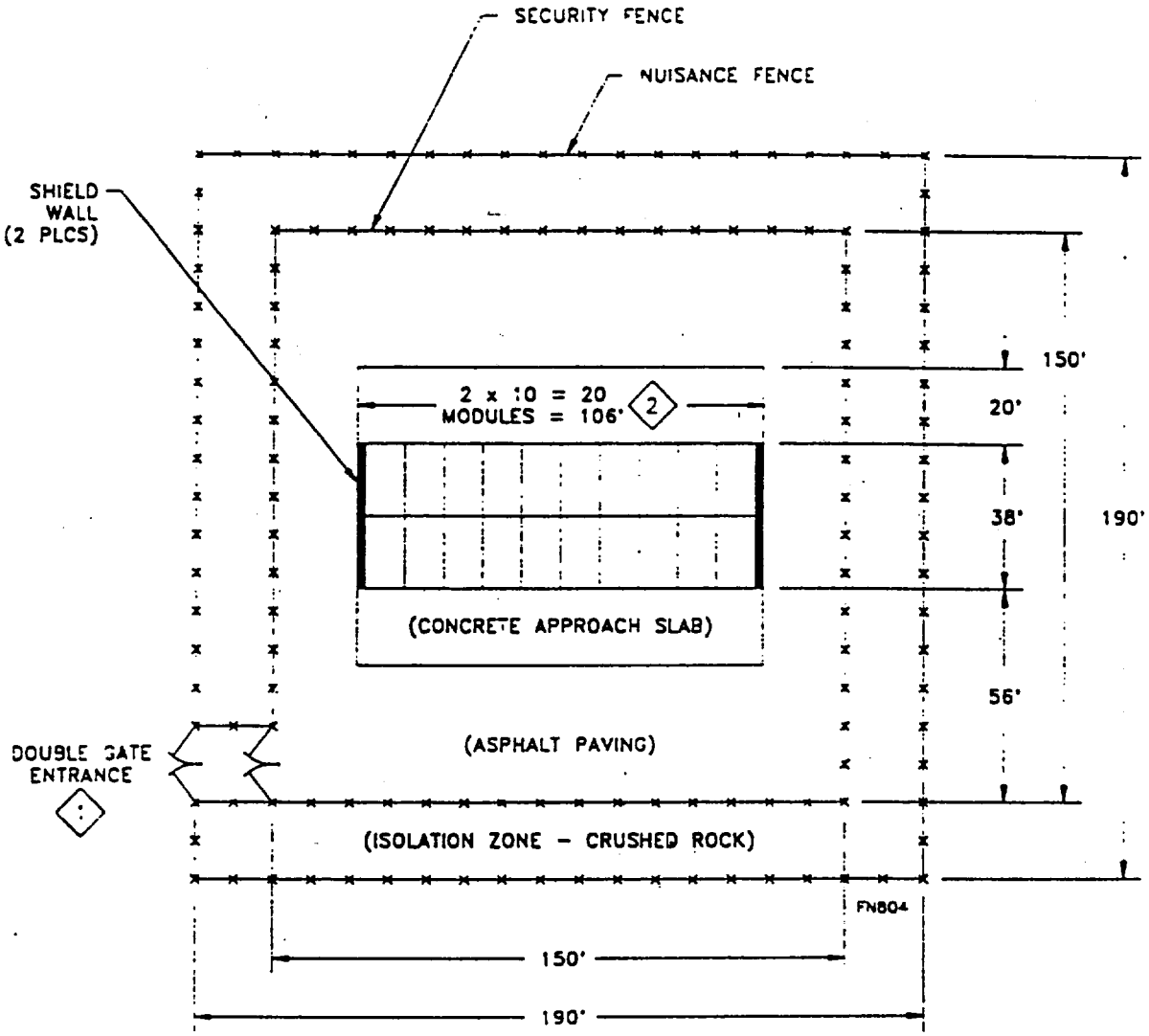

NOTES:

1. LOCATION OF ENTRANCE TO ISFSI TO BE COMPATIBLE WITH PLANT SITE ROADS.
2. NUMBER OF MODULES DETERMINED BY USER BASED ON PLANT DISCHARGE RATES AND DRY STORAGE NEEDS.

Figure 1.3-11
Typical Double Module Row NUHOMS® ISFSI Layout

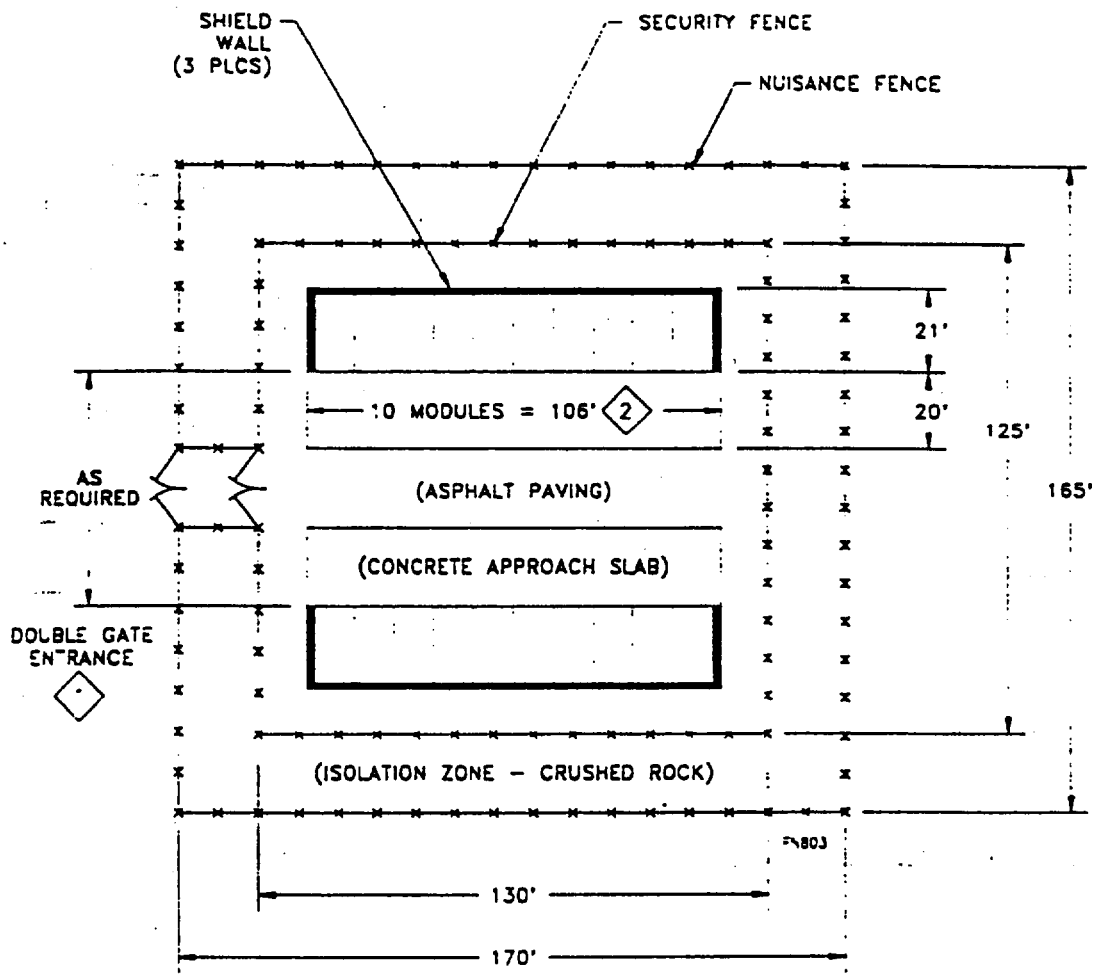

NOTES:

1. LOCATION OF ENTRANCE TO ISFSI TO BE COMPATIBLE WITH PLANT SITE ROADS.
2. NUMBER OF MODULES DETERMINED BY USER BASED ON PLANT DISCHARGE RATES AND DRY STORAGE NEEDS.

Figure 1.3-12
Typical Single Module Row NUHOMS® ISFSI Layout

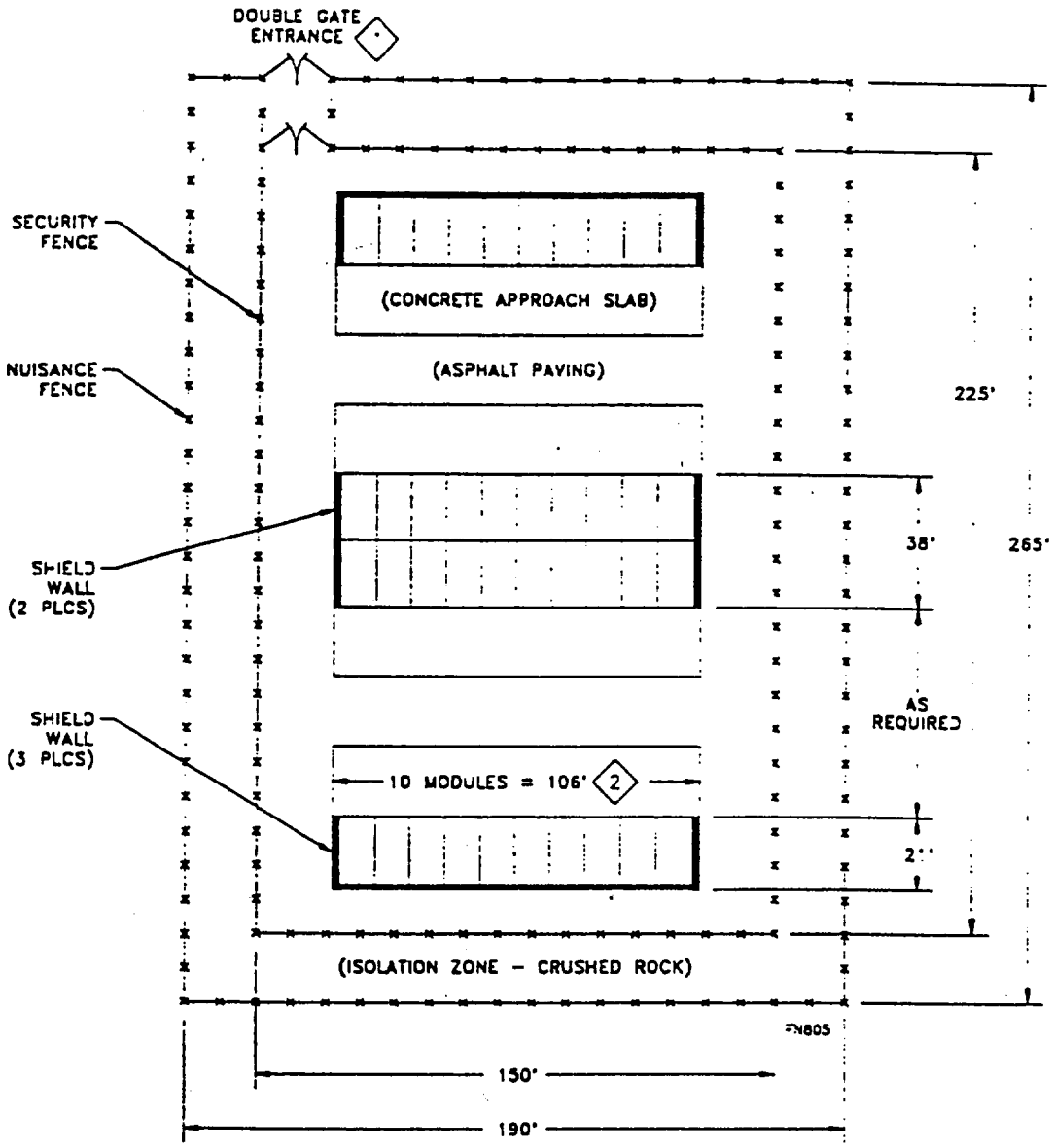

NOTES:

1. LOCATION OF ENTRANCE TO ISFSI TO BE COMPATIBLE WITH PLANT SITE ROADS.
2. NUMBER OF MODULES DETERMINED BY USER BASED ON PLANT DISCHARGE RATES AND DRY STORAGE NEEDS.

Figure 1.3-13
Typical Combined Single and Double Module Row NUHOMS® ISFSI Layout

specific ORIGEN calculations for a candidate fuel assembly to determine calorimetry or burnup test measurements, are acceptable for determining the acceptability of the candidate SFA.

3.1.1.3 Radiological Characteristics

The limits for three fuel management parameters including initial enrichment, burnup, and cooling time as specified in Chapter 10 must be met. Using these parameters as acceptance criteria, existing records and plant procedures form the basis for controlling the selection and placement of candidate fuel assemblies.

3.1.2 General Operating Functions

Functional Overview of the Installation (for information only)

A NUHOMS® ISFSI is designed to maximize the use of existing plant features and equipment, and to minimize the need to add or modify equipment. The ISFSI may be located away from the existing plant security boundary such that a separate protected area is created. The only services required from the plant during the ongoing passive storage mode is through security surveillance equipment located in the plant Central Alarm Station (CAS) and Secondary Alarm Station (SAS). The ISFSI should be included in routine daily security patrols for the plant site conducted by the licensee. The power provided for the ISFSI security system and lighting is obtained from a retail source. Other support services from the plant are necessary only during DSC transfer and retrieval operations.

For the NUHOMS® system, SFAs are loaded into the DSC as discussed in Section 1.3. During loading, the DSC is resting in the cavity of the transfer cask, in the fuel pool cask laydown area. After removal from the pool, the DSC is dried and backfilled with helium. After drying, the DSC (still inside the transfer cask) is moved to the cask skid/trailer and transported to the ISFSI. The DSC is pushed from the transfer cask into the HSM by a hydraulic ram.

Once inside the HSM, the DSC and its payload of SFAs is in passive dry storage. Safe storage in the HSM is assured by a natural convection heat removal system, and massive concrete walls and slabs which act as biological radiation shields. The storage operation of the HSMs and DSCs is totally passive. No active systems are required.

3.1.2.1 Handling and Transfer Equipment

The handling and transfer equipment required to implement the NUHOMS® system includes a cask handling crane at the reactor fuel pool, a cask lifting yoke, a transfer cask, a cask support skid and positioning system, a low profile heavy haul transport trailer and

a hydraulic ram system. This equipment is designed and tested to applicable governmental and industrial standards and is maintained and operated according to the manufacturer's specifications. Performance criteria for this equipment, excluding the fuel/reactor building cask handling crane, is given in the following sections. The criteria are summarized in Table 3.1-7

On-Site Transfer Cask: The on-site transfer cask used for the NUHOMS® system has certain basic features. The DSC is transferred from the plant's fuel pool to the HSM inside the transfer cask. The cask provides neutron and gamma shielding adequate for biological protection at the outer surface of the cask. The cask is capable of rotation, from the vertical to the horizontal position on the support skid. The cask has a top cover plate which is fitted with a lifting eye allowing removal when the cask is oriented horizontally. The cask is capable of rejecting the design basis decay heat load to the atmosphere assuming the most severe ambient conditions postulated to occur during normal, off-normal and accident conditions. For the NUHOMS®-24P DSC, the transfer cask has a cylindrical cavity of 1.73m (68 inches) diameter and 4.75m (186.75 inches) in length and a payload capacity of 40,900 Kg (90,000 pounds)(wet). For the NUHOMS®-52B, the transfer cask is fitted with an extension collar to accommodate the longer BWR DSC and fuel. Alternatively, a transfer cask with a full length cavity of 5.0m (196.75 inches) may be used for the NUHOMS®-24P (with cask spacer) or NUHOMS®-52B DSCs. The cask and the associated lifting yoke are designed and operated such that the consequences of a postulated drop satisfy the current 10CFR50 licensing bases for the vast majority of plants.

The NUHOMS® transfer cask is designed to meet the requirements of 10CFR72 (3.6) for normal, off-normal and accident conditions. The NUHOMS® transfer cask is designed for the following conditions:

A.	Seismic	Reg. Guide 1.60 (3.11) and 1.61 (3.12)
B.	Operational Handling Loads	ANSI/ANS-57.9-1984 (3.36)
C.	Accidental Drop Loads	ANSI/ANS-57.9-1984
D.	Thermal and Dead Loads	ANSI/ANS-57.9-1984
E.	Tornado Wind and Missile Loads	Reg. Guide 1.76 (3.7) and NUREG-0800 (3.8)

Extreme environmental conditions due to tornado generated missiles and floods are not considered to be credible because of the infrequent use (normally four to five times a year) and short period of time (normally about a day) for which the transfer cask is

utilized for DSC transfer operations. Nevertheless, the transfer cask is conservatively evaluated for tornado missile impact. The transfer cask is also designed for tornado wind loads in accordance with 10CFR72.122. Since the DSC and the double closure welds on the DSC form the pressure containment boundary for the spent fuel materials, the transfer cask is not designed for internal pressure. Seals are, however, provided for the bottom ram access penetration closure plate to prevent the ingress of contaminated water during DSC loading in the fuel pool.

Cask Support Skid and Positioning System Criteria: The cask support skid and positioning system utilized in the NUHOMS® system has a unique criterion in that it must be capable of transverse movement relative to the transport trailer. The cask support skid is capable of allowing rotation of the cask from vertical to horizontal. The skid does not extend past the top end of the cask in order to allow the HSM cask docking collar to seat with the cask and prevent radiation streaming during DSC transfer.

Transverse movement is necessary to align the cask with the HSM so that the DSC transfer may be accomplished smoothly without sticking or binding. The design uses spherical bearing plates supporting the skid and cask at the four corners of the skid. These bearing plates slide on beams supported by the trailer. The amount of transverse motion required is a few inches. The system has positive locks which prevent any possibility of movement or load shifting during transport.

Trailer Criteria: The heavy-haul vehicle used to transport the cask, skid and DSC from the spent fuel pool to the HSM is a low profile, truck-towed, multi-axle trailer. The principal criteria for the transport trailer are the capacity to bear the weight of the cask and the support skid, plus the additional inertia forces associated with transport operations; to minimize the height and limit the orientation of postulated cask drop accidents, and the HSM height; and to have the ability to adjust the height of the cask in order to achieve precise alignment with the HSM. This latter requirement is accomplished with the support skid positioning system.

Once the height adjustment is complete, the cask support skid is brought into solid contact with the ISFSI approach slab. That is, any springing, such as may result from tires, coil springs or other flexible members, is eliminated from the cask support system in order to prevent cask movement while the DSC is being transferred into the HSM.

Hydraulic Ram System Criteria: The hydraulic ram system consists of a double acting single or multi-stage hydraulic cylinder mounted on a firm base, with a grapple affixed to the piston. It is used to apply a push or pull force to transfer the DSC to and from the cask and HSM. The hydraulic ram is capable of exerting sufficient force during the entire insertion and retrieval strokes to effect the transfer. The ram has the capacity to move the DSC assuming a coefficient of friction of one for the DSC sliding in the cask or in the HSM. The ram is limited to exert a force of 356 kN (80,000 pounds), somewhat greater than the loaded weight of the DSC. The stroke of the ram is sufficient to complete the

transfer. The piston when fully extended is able to withstand a compressive load equal to the weight of the loaded DSC. During DSC transfer operations, the ram is firmly attached to the cask to transfer the reaction load during insertion and retrieval.

3.1.2.2 Waste Processing, Packaging and Storage Areas

The only waste produced during the NUHOMS® storage operations is contaminated water drained from the DSC cavity after fuel loading, and the water used to decontaminate the outer surface of the transfer cask after removal from the spent fuel pool. This water is removed from the DSC and cask in the plant's fuel/reactor building and routed back to the spent fuel pool, or the plant's radwaste treatment system.

Likewise, the air and helium evacuated from the DSC during the drying operations may be sampled and checked for radioactive releases. If clean, the gas can be released. If contaminated, the gas is routed to the spent fuel pool or the plant's off-gas processing system where it is filtered and released.

A limited amount of dry active waste is generated from temporary protective clothing and material used during fuel loading, DSC drying, and sealing operations.

The only other waste generated by the NUHOMS® system is the components of storage themselves at the end of their service life. These will be treated and disposed of during ISFSI decommissioning.

m/sec (290 miles per hour), the maximum translational speed is 31 m/sec (70 miles per hour), the radius of the maximum rotational speed is 45.7 m (150 feet), the pressure drop across the tornado is 20.7 kN/m^2 (3.0 psi), and the rate of pressure drop is 13.8 kN/m^2 (2.0 psi) per second. The maximum transit time based on the 2.2 m/sec (5 miles per hour) minimum translational speed specified for Region I is not used since an infinite transit time is conservatively assumed.

3.2.1.2 Determination of Forces on Structures

The effects of a DBT are evaluated for the NUHOMS® transfer cask and HSM. Tornado loads are generated for two separate loading phenomena: First, pressure forces created by drag as air impinges and flows past the transfer cask or HSM; and second, impact, penetration, and spalling forces created by tornado-generated missiles impinging on the HSM. The atmospheric pressure change induced forces are considered. In the following paragraphs, the determination of these forces is described.

The determination of the DBT velocity pressure is based on the following equation as specified in ANSI 58.1-1982 (3.9).

$$q = 0.00256\ K_z(IV)^2 \qquad (3.2\text{-}1)$$

Table 5 of ANSI A58.1 (3.9) defines the Importance Factor (I) to be 1.07 and the velocity pressure exposure coefficient (K_z) to be 0.8 applied to the full HSM height of 4.6 m (15 feet). Since the generic design basis HSM dimensions are relatively small compared to the 45.7 m (150 ft) rotational radius of the DBT, the velocity value of combined rotational and translational wind velocity of 160 m/sec (360 miles per hour) is conservatively used in Equation 3.2-1 as follows:

$$q = 0.00256 \times 0.8 \times [1.07 \times 360]^2 = 304 \text{ psf} \qquad (3.2\text{-}2)$$

The calculated DBT velocity pressure is converted to a design wind pressure by multiplying this value by the appropriate pressure and gust response coefficients specified in Figure 2 and Table 8.4 of ANSI A58.1-1982. Note that with a gust response coefficient of 1.32 as used in Table 3.2-2, the wind pressure used in this analysis bounds that obtained using the basic wind pressure formula $q = 0.00256 \times V^2$. The magnitude and direction of the design pressures for various HSM surfaces and the corresponding pressure coefficients are tabulated in Table 3.2-2. The effects of overturning and sliding of the HSM under these design pressures are also evaluated and are reported with the stress analysis results in Section 8.2.

The transfer cask is also evaluated for a 19 kN/m^2 (397 psf) DBT velocity pressure since this load magnitude envelops that for a closed cylindrical structure such as the cask. The transfer cask stress analysis for tornado wind loads is contained in Section 8.2.

The determination of impact forces created by DBT generated missiles for the HSM is based on the criteria provided by NUREG-0800, Section 3.5.1.4, III.4 (3.8). Accordingly, three types of missiles are postulated. The velocity of these missiles is conservatively assumed to be 35 percent of the combined translational and rotational velocity for the DBT, which is 56 m/sec (126 miles per hour). For the massive high kinetic energy deformable missile specified in NUREG-0800, a 1,800 kg (3,967 pound) automobile with a 1.86 m^2 (20 square foot) frontal area impacting at normal incidence is assumed. For the rigid penetration-resistant missile specified, a 125 kg (276 pound), 0.2 m (eight inch) diameter blunt-nosed armor piercing artillery shell, impacting at normal incidence is assumed. For the protective barrier impingement missile specified, a 25.4 mm (one inch) diameter solid steel sphere is assumed.

For the overall effects of a DBT missile impact, overturning, and sliding on the HSM, the force due to the deformable massive missile impact is applied to the structure at the most adverse location. Conservation of momentum is assumed to demonstrate that sliding and/or tipping of a single stand alone module will not result in an unacceptable condition for the module. The coefficient of restitution is assumed to be zero and the missile energy is transferred to the module to be dissipated as sliding friction, or an increase in potential energy due to raising the center of gravity. The force is evenly distributed over the impact area. The magnitude of the impact force for design of the local reinforcing is calculated in accordance with Bechtel Topical Report "Design of Structures for Missile Impact" (3.50).

For the local damage analysis of the HSM for DBT missiles, the rigid penetration-resistant missile is used for the evaluation of concrete penetration, spalling, scabbing and perforation thickness. The modified National Defense Research Committee (NDRC) empirical formula is used for this evaluation as recommended in NUREG-0800, Section 3.5.3 (3.25). The results of these evaluations are reported in Section 8.2.

3.2.1.3 Ability of Structures to Perform

The HSM protects the DSC from adverse environmental effects and is the principal NUHOMS® structure exposed to tornado wind and missile loads. Furthermore, all components of the HSM (regardless of their safety classification) are designed to withstand tornadoes and tornado-based missiles. The transfer cask protects the DSC during transit to the ISFSI from adverse environmental effects such as tornado winds. The analyses of the HSM and transfer cask for tornado effects is contained in Sections 8.2.1 and 8.2.2.

3.3 Safety Protection System

3.3.1 General

The NUHOMS® system is designed for safe and secure, long-term containment and dry storage of SFAs. The components, structures, and equipment which are designed to assure that this safety objective is met are shown in Table 3.3-1. The key elements of the NUHOMS® system and its operation which require special design consideration are:

A. Minimizing the contamination of the DSC exterior by fuel pool water.

B. The double closure seal welds on the DSC shell to form a pressure retaining containment boundary and to maintain a helium atmosphere.

C. Minimizing personnel radiation exposure during DSC loading, closure, and transfer operations.

D. Design of the transfer cask and DSC for postulated accidents.

E. Design of the HSM passive ventilation system for effective decay heat removal to ensure the integrity of the fuel cladding.

F. Design of the DSC basket assembly to ensure subcriticality.

These items are addressed in the following subsections.

3.3.2 Protection by Multiple Confinement Barriers and Systems

3.3.2.1 Confinement Barriers and Systems

The radioactive material which the NUHOMS® ISFSI confines is the spent fuel assemblies and the associated contaminated materials. These radioactive materials are confined by the multiple barriers listed in Table 3.3-2.

During fuel loading operations, the radioactive material in the plant's fuel pool is prevented from contacting the DSC exterior by filling the cask/DSC annulus and DSC with uncontaminated, demineralized water prior to placing the cask and DSC in the fuel pool. This places uncontaminated water in the annulus between the DSC and cask interior. In addition, the cask/DSC annulus opening at the top of the cask is sealed using an inflatable seal to prevent pool water from entering the annulus. This procedure

minimizes the likelihood of contaminating the DSC exterior surface. The combination of the above operations assures that the DSC surface loose contamination levels are within those required for shipping cask externals (see Section 3.3.7.1). Compliance with these contamination limits is assured by taking surface swipes of the upper end of the DSC while resting in the cask in the decon area.

Once inside the DSC, the SFAs are confined by the DSC shell and by multiple barriers at each end of the DSC. As listed in Table 3.3-2, the fuel cladding is the first barrier for confinement of radioactive materials. The fuel cladding is protected by maintaining the cladding temperatures during storage below those levels which may cause degradation of the cladding. In addition, the SFAs are stored in an inert atmosphere to prevent degradation of the fuel, specifically cladding rupture due to oxidation and its resulting volumetric expansion of the fuel. Thus, a helium atmosphere for the DSC is incorporated in the design to protect the fuel cladding integrity by inhibiting the ingress of oxygen into the DSC cavity.

Helium is known to leak through valves, mechanical seals, and escape through very small passages because of its small atomic diameter and because it is an inert element and exists in a monatomic species. Negligible leakage rates can be achieved with careful design of vessel closures. Helium will not, to any practical extent, diffuse through stainless steel (3.33). For this reason the DSC has been designed as a redundant weld-sealed containment pressure vessel with no mechanical or electrical penetrations.

The DSC itself has a series of barriers to ensure the confinement of radioactive materials. The DSC cylindrical shell is fabricated from rolled ASME stainless steel plate which is joined with full penetration 100% radiographed welds. All top and bottom end closure welds are multiple-pass welds. This effectively eliminates a pinhole leak which might occur in a single pass weld, since the chance of pinholes being in alignment on successive weld passes is not credible. Furthermore, the DSC cover plates are sealed by separate, redundant closure welds. All the DSC pressure boundary welds are inspected according to the appropriate articles of the ASME Boiler and Pressure Vessel Code, Section III, Division 1, Subsection NB. This criteria insures that the weld filler metal is as sound as the parent metal of the pressure vessel.

Pressure monitoring instrumentation is not used since penetration of the pressure boundary would be required. The penetration itself would then become a potential leakage path and by its presence compromise the integrity of the DSC design. The DSC shell and welded cover plates provide total confinement of radioactive materials. Once the DSC is sealed, there are no credible events which could fail the DSC cylindrical shell or the double closure plates which form the DSC containment pressure boundary. This is discussed further in Chapter 8.

3.3 Safety Protection System

3.3.1 General

The NUHOMS® system is designed for safe and secure, long-term containment and dry storage of SFAs. The components, structures, and equipment which are designed to assure that this safety objective is met are shown in Table 3.3-1. The key elements of the NUHOMS® system and its operation which require special design consideration are:

A. Minimizing the contamination of the DSC exterior by fuel pool water.

B. The double closure seal welds on the DSC shell to form a pressure retaining containment boundary and to maintain a helium atmosphere.

C. Minimizing personnel radiation exposure during DSC loading, closure, and transfer operations.

D. Design of the transfer cask and DSC for postulated accidents.

E. Design of the HSM passive ventilation system for effective decay heat removal to ensure the integrity of the fuel cladding.

F. Design of the DSC basket assembly to ensure subcriticality.

These items are addressed in the following subsections.

3.3.2 Protection by Multiple Confinement Barriers and Systems

3.3.2.1 Confinement Barriers and Systems

The radioactive material which the NUHOMS® ISFSI confines is the spent fuel assemblies and the associated contaminated materials. These radioactive materials are confined by the multiple barriers listed in Table 3.3-2.

During fuel loading operations, the radioactive material in the plant's fuel pool is prevented from contacting the DSC exterior by filling the cask/DSC annulus and DSC with uncontaminated, demineralized water prior to placing the cask and DSC in the fuel pool. This places uncontaminated water in the annulus between the DSC and cask interior. In addition, the cask/DSC annulus opening at the top of the cask is sealed using an inflatable seal to prevent pool water from entering the annulus. This procedure

minimizes the likelihood of contaminating the DSC exterior surface. The combination of the above operations assures that the DSC surface loose contamination levels are within those required for shipping cask externals (see Section 3.3.7.1). Compliance with these contamination limits is assured by taking surface swipes of the upper end of the DSC while resting in the cask in the decon area.

Once inside the DSC, the SFAs are confined by the DSC shell and by multiple barriers at each end of the DSC. As listed in Table 3.3-2, the fuel cladding is the first barrier for confinement of radioactive materials. The fuel cladding is protected by maintaining the cladding temperatures during storage below those levels which may cause degradation of the cladding. In addition, the SFAs are stored in an inert atmosphere to prevent degradation of the fuel, specifically cladding rupture due to oxidation and its resulting volumetric expansion of the fuel. Thus, a helium atmosphere for the DSC is incorporated in the design to protect the fuel cladding integrity by inhibiting the ingress of oxygen into the DSC cavity.

Helium is known to leak through valves, mechanical seals, and escape through very small passages because of its small atomic diameter and because it is an inert element and exists in a monatomic species. Negligible leakage rates can be achieved with careful design of vessel closures. Helium will not, to any practical extent, diffuse through stainless steel (3.33). For this reason the DSC has been designed as a redundant weld-sealed containment pressure vessel with no mechanical or electrical penetrations.

The DSC itself has a series of barriers to ensure the confinement of radioactive materials. The DSC cylindrical shell is fabricated from rolled ASME stainless steel plate which is joined with full penetration 100% radiographed welds. All top and bottom end closure welds are multiple-pass welds. This effectively eliminates a pinhole leak which might occur in a single pass weld, since the chance of pinholes being in alignment on successive weld passes is not credible. Furthermore, the DSC cover plates are sealed by separate, redundant closure welds. All the DSC pressure boundary welds are inspected according to the appropriate articles of the ASME Boiler and Pressure Vessel Code, Section III, Division 1, Subsection NB. This criteria insures that the weld filler metal is as sound as the parent metal of the pressure vessel.

Pressure monitoring instrumentation is not used since penetration of the pressure boundary would be required. The penetration itself would then become a potential leakage path and by its presence compromise the integrity of the DSC design. The DSC shell and welded cover plates provide total confinement of radioactive materials. Once the DSC is sealed, there are no credible events which could fail the DSC cylindrical shell or the double closure plates which form the DSC containment pressure boundary. This is discussed further in Chapter 8.

3.3.2.2 Ventilation - Offgas

The NUHOMS® system relies on natural convection through the air space in the HSM to cool the DSC. This passive convective ventilation system is driven by the pressure difference due to the stack effect (ΔP_s) provided by the height difference between the bottom of the DSC and the HSM air outlet, which is larger than the flow pressure drop (ΔP_f) at the design air inlet and outlet temperatures. The details of the ventilation system design are provided in Chapters 4 and 8.

There are no radioactive releases of effluents during normal and off-normal storage operations. Also, there are no credible accidents which cause significant releases of radioactive effluents from the DSC. Therefore, there are no off-gas or monitoring system requirements for the HSM. The only time an off-gas system is required is during DSC drying operations. During this operation, the spent fuel pool or plant's radwaste system is used to process the air and helium which is evacuated from the DSC.

3.3.3 Protection by Equipment and Instrumentation Selection

3.3.3.1 Equipment

The HSM, DSC, and on-site transfer cask are the equipment which is important to safety. Other equipment important to safety associated with the NUHOMS® system is the equipment required for handling operations within the plant's fuel/reactor building and are regulated by the plant's 10CFR50 operating license.

3.3.3.2 Instrumentation

The NUHOMS® system is a totally passive system. No safety-related instrumentation is necessary. The maximum temperatures and pressures are conservatively bounded by analyses (see Section 8.1.3). Therefore, there is no need for monitoring the internal cavity of the DSC for pressure or temperature during normal operations. The DSC is conservatively designed to perform its containment function during all worst case normal, off-normal, and postulated accident conditions. HSM thermal monitoring is required to meet the requirements of Section 10.

3.3.4 Nuclear Criticality Safety

The NUHOMS®-24P DSC is designed to meet 10CFR72.124 criticality safety limits during worst case wet loading/unloading operations without the use of fixed neutron absorbing materials (poisons) by two alternative means:

A. Utilizing credit for burnup (uranium depletion and non-volatile fission product buildup) and

B. Utilizing credit for the negative reactivity of soluble boron in the flooded DSC.

Since credit for burnup has not yet received generic approval by the NRC for dry storage applications, credit for soluble boron forms the design basis for the NUHOMS®-24P DSC until credit for burnup is generically accepted.

The NUHOMS®-52B DSC is designed to meet 10CFR72.124 criticality safety limits utilizing fixed neutron absorbing materials in the internal basket assembly until credit for burnup is generically accepted. The criticality safety analyses for the NUHOMS®-24P and NUHOMS®-52B DSCs are presented below.

3.3.4.1 NUHOMS®-24P DSC Criticality Safety

The NUHOMS®-24P DSC credit for burnup criticality analysis is presented in the paragraphs which follow. The NUHOMS®-24P DSC credit for soluble boron analysis is documented by previous NRC question responses docketed under Project M-49. These question responses are included as Appendix F of this SAR for ease of reference.

3.3.4.1.1 Control Methods for Prevention of Criticality

A. General Methodology (NUHOMS®-24P)

The NUHOMS®-24P DSC basket is designed to ensure nuclear criticality safety during worst case wet loading operations. Rigorous measures are taken to exclude the possibility of flooding the DSC cavity during the transfer operations and storage period. Prior to these operations, the DSC is vacuum dried, backfilled with helium, double seal welded, and helium leak tested to assure weld integrity. Under these dry conditions there is no possibility of exceeding criticality safety limits. Since the transfer cask and HSM are designed to provide adequate drop and/or missile protection for the DSC, and the DSC basket is designed to maintain the fuel configuration after a drop accident, there is no credible accident scenario which would result in the possibility of water intrusion into the DSC; nor is there a credible accident scenario which would result in the canister being breached and flooded.

Control methods for the prevention of criticality for the NUHOMS®-24P DSC consist of the material properties of the fuel, administrative procedures (i.e., a plant-specific system using records or tests to document initial enrichment and burnup of the selected fuel assemblies), the geometrical arrangement of the basket and the inherent neutron absorption in the stainless steel guide sleeve assemblies.

Credit for burnup is taken by calculating an initial enrichment equivalent to the fissile inventory of the spent fuel. The CSAS2 criticality analysis sequence included in the SCALE-3 package of computer codes (3.44) is used to demonstrate subcriticality during

moderation by pure water having a wide density range. Credit is taken for negative reactivity due to stable fission products.

The DSC basket is shown by analysis in Chapter 8 to maintain its configuration and location of the fuel assemblies after a drop accident. The DSC shell is shown to maintain its integrity during the accident so that no credible accident exists whereby the DSC may be accidentally flooded with fresh water. Water intrusion is not feasible since the DSC has been qualified to be helium leak tight for all postulated events which is a much more limiting condition. ISFSI flooding does result in canister immersion and a water reflector for the spent fuel matrix. However, as has been shown for the NUHOMS®-52B DSC in Section 3.3.4.2, this case does not limit the design. Since moderator intrusion during storage is prevented, subcriticality of the DSC is assured during storage at the ISFSI.

B. Design Parameters for Criticality Model (NUHOMS®-24P)

The geometry and fuel characteristics of the NUHOMS®-24P DSC criticality model are shown in Table 3.3-3. Figure 3.3-1 shows the actual geometry of the DSC and the geometry of the CSAS2 model. Figure 3.3-2 describes the modeling of the fuel assembly guide sleeves with the heterogeneous fuel assembly region inside.

The NUHOMS®-24P DSC internals design relies on administrative procedures to allow only fuel assemblies of less than a predetermined residual reactivity to be placed in the DSC for storage. The predetermined residual reactivity limit is selected to correspond roughly to a fuel assembly at 80 percent of what is typically considered full burnup. The concept of reactivity equivalency is used to develop a curve of constant reactivity through the enrichment/burnup space assuming the DSC was fully loaded with spent B&W 15x15 fuel assemblies. The resulting curve of reactivity equivalence for the DSC is presented in Figure 3.3-3. The reactivity equivalence curve extends from a zero burnup, initial enrichment equivalent point of 1.45 w/o (weight percent) U-235 to a high enrichment endpoint corresponding to 4.00 w/o U-235 initial enrichment irradiated for approximately 37,000 MWD/MTU. The reactivity equivalence curve presented in Figure 3.3-3 is used to determine the acceptability of storing specific fuel assemblies in the NUHOMS®-24P DSC.

The selection of a 15x15 fuel assembly for PWR criticality calculations has been shown by many analyses to be the most reactive under a variety of conditions when compared to other PWR fuel assemblies (i.e., 14x14, 16x16, and 17x17) (3.28, 3.29, 3.30, 3.31). Thus the B&W 15x15 fuel selected as the design basis for the NUHOMS®-24P canister forms a sufficient basis to permit storage of PWR fuel types which meet the requirements of Section 10.3.1.1.

3.3.4.1.2 Reactivity Equivalence and Criticality Analysis Methods

A. Computer Code Description (NUHOMS®-24P)

1. The CASMO-2 computer code developed by Studsvik Energiteknik AB and supported by the Electric Power Research Institute (3.38),

2. The Shielding Analysis Sequence No. 2 (SAS2) included in the SCALE-3 package of codes developed by Oak Ridge National Laboratories (3.44), and

3. The Criticality Safety Analysis Sequence No. 2 (CSAS2) included in the SCALE-3 package of codes.

The CASMO-2 computer code is a multigroup two-dimensional transport theory code for burnup calculations on PWR or BWR assemblies. CASMO-2 is an industry recognized code which has been accepted by the NRC (3.39). Its ability to predict isotopic generation and depletion as well as neutron multiplication is well established in benchmark calculations (References 3.48, 3.49) and through its successful application in numerous reactor physics and core reload design calculations.

B. Computer Code Application (NUHOMS®-24P)

CASMO-2 is used in the criticality/equivalence calculations in two ways:

1. Irradiated fuel actinide number density data is obtained from CASMO-2 calculations for input to the CSAS2 criticality code sequence, and

2. A set of CASMO-2 k_{inf} results for infinite arrays of B&W 15x15 irradiated and non-irradiated fuel assemblies are used as a benchmark standard to validate the SAS2/CASMO2/CSAS2 criticality/equivalence analysis method used in the subject criticality calculations.

The use of the two dimensional actinide inventories is considered acceptable since axial burnup variation effects on irradiated fuel reactivity are considered in separate sensitivity calculations, and a conservative bias and uncertainty is added to the nominal two dimensional analysis k_{eff} results.

The SAS2 sequence in SCALE-3 is used to generate sets of spent fuel fission product inventory data at various burnup levels for the initial enrichment points considered. Only nonvolatile fission products identified as major neutron absorbers in Reference 3.40 are included in spent fuel criticality/equivalencing calculations.

SAS2 is an industry recognized code which employs ORIGEN-S to perform fuel burnup, depletion and decay calculations. SAS2 has been extensively tested for use in spent fuel isotopic inventory and decay heat source term development work (3.2). SAS2 is used with the 27GROUPNDF4 cross-section data library included in SCALE-3 to generate the fission product data used in the criticality analyses.

CASMO-2 generated actinide number densities and SAS2/ORIGEN's generated fission product number densities are used as input to the CSAS2/KENO sequence to specify irradiated fuel compositions in the equivalence calculations. The more rigorous rod-to-rod CASMO-2 program is used to generate actinide number densities based on a comparison of isotopic benchmark results for both SAS2 and CASMO (References 3.2 and 3.48 respectively). The comparison indicated, as expected, that the rod-to-rod CASMO-2 method generates more accurate irradiated fuel actinide inventories. SAS2/ORIGEN's irradiated fuel fission product number densities are used for reasons of compatibility with the CSAS2/KENO criticality analysis sequence; CASMO-2 employs lumped fission product data to account for many fission products contributing negative reactivity to irradiated fuel.

CSAS2 and the 123GROUPGMTH master cross-section library included in SCALE-3 are used in calculating an effective neutron multiplication factor, k_{eff}, for each initial enrichment/burnup combination considered. The CSAS2 analysis sequence used two cross-section processing codes (NITAWL and BONAMI), and a three-dimensional Monte-Carlo code (KENO-IV) for calculating the k_{eff} values for fully loaded DSC fuel arrays. The actinide data generated by CASMO-2 and the fission product data generated by SAS2 are used as input to CSAS2 for specifying spent fuel compositions.

C. Burnup Equivalence Determination (NUHOMS®-24P)

Several sets of k_{eff} values are calculated corresponding to a nominal case NUHOMS®-24P DSC model fully loaded with spent fuel at a number of different burnup levels for several initial fuel enrichments over the 1.45 to 4.0 w/o U-235 range. Appropriate burnup related uncertainties are added and the resulting k_{eff} data analyzed using least-squares methods to determine the burnup level necessary in each initial enrichment case to obtain an acceptable k_{eff} value, allowing for additional uncertainties. A curve of reactivity equivalence is then constructed through these initial enrichment/burnup points and extended to a zero burnup intercept point. Additional uncertainties related to mechanical tolerances, fuel assembly positioning, moderator density, and reflector effects are analyzed at the zero burnup intercept point of 1.45 w/o U-235. The final k_{eff} value assigned to the DSC represents a maximum at a 95/95 tolerance level assuming a full loading of design basis fuel with an initial enrichment and burnup combination found anywhere along the curve of equal reactivity presented in Figure 3.3-3.

The zero burnup intercept point for the reactivity equivalence curve is established for the NUHOMS®-24P DSC design by performing a study of NUHOMS®-24P DSC basket

criticality versus enrichment and determining the maximum fresh fuel enrichment to meet the limit on k_{eff} of 0.95 with uncertainties. Once establishing 1.45 w/o U-235 as the maximum fresh fuel enrichment that would meet the 0.95 limit with uncertainties, calculations are performed to determine what levels of burnup are necessary to obtain identical final k_{eff} results (with uncertainties) for a number of higher initial enrichments over the 1.45 to 4.0 w/o U-235 range. The first step in establishing the equivalent reactivity burnup levels is the calculation of several sets of k_{eff} values corresponding to a nominal case DSC model fully loaded with irradiated fuel; five sets of nominal k_{eff} values are generated corresponding to five initial enrichment cases in the range of interest.

Four burnup levels are analyzed in each initial enrichment case. A summary of the initial enrichment/burnup level combination cases analyzed and the calculated nominal k_{eff} results is provided in Table 3.3-4. Appropriate uncertainties are calculated and applied to the nominal irradiated fuel k_{eff} results and the resulting worst-case k_{eff} data for each initial enrichment case are analyzed using least-squares methods. Equivalent reactivity burnup levels are established for each initial enrichment case when the calculated worst-case k_{eff} result for an irradiated fuel case corresponded exactly to the worst-case k_{eff} result for the 1.45 w/o U-235 fresh fuel case. The equivalent burnup levels established for each of the initial enrichment cases analyzed are provided in Table 3.3-5. Once equivalent burnup levels are established, a curve of reactivity equivalence is fit through these points in the initial enrichment/burnup space. The final k_{eff} value assigned to the NUHOMS®-24P DSC represents a maximum at a 95/95 tolerance level assuming a full loading of design basis fuel with an initial enrichment and burnup combination found anywhere along the curve of equal reactivity presented in Figure 3.3-3.

3.3.4.1.3 Criticality Evaluation

This section presents the analyses which demonstrate the acceptability of storing qualified fuel in the NUHOMS®-24P DSC under normal fuel loading, handling, and storage conditions. A nominal case model is described and a neutron multiplication factor, k_{eff}, presented. Uncertainties are addressed and applied to the nominal calculated k_{eff} value. The final k_{eff} value produced represents a maximum with a 95 percent probability at a 95 percent confidence level as required by ANSI/ANS-57.2-1983 (3.46) to demonstrate criticality safety.)

A. Basic Assumptions (NUHOMS®-24P)

The following assumptions are used in the NUHOMS®-24P DSC criticality evaluation:

1. Credit is taken for fuel burnup as allowed by ANSI/ANS 8.17-1984 (3.47).

2. Credit is taken for the inherent neutron absorption capability of the stainless steel guide sleeve assemblies of the DSC basket as shown on the design drawings in Appendix E.

3. No credit is taken for neutron absorption in burnable poisons, control rods, supplemental neutron poisons, or control component structural materials. When control components are stored, borated moderator is displaced by the component. Verification that this displacement reduces reactivity is provided in Appendix H.

4. All assemblies are assumed to be nonirradiated 1.45 w/o U-235 enriched B&W 15x15 type or irradiated B&W 15x15 assemblies of equal or less reactivity when a fully loaded DSC is considered.

5. The DSC spent fuel storage array is modeled as finite in lateral extent and infinite in axial extent except in axial burnup variation sensitivity calculations which assumed water reflection at both axial ends of the fuel array.

6. Geometrical and material uncertainties due to mechanical tolerances are treated by either using worst-case configurations or by performing sensitivity calculations and obtaining appropriate uncertainty values. The uncertainties considered included:

   a. Stainless steel guide sleeve wall thickness
   b. Center-to-center spacing
   c. Cell ID
   d. Cell bowing
   e. Assembly positioning
   f. Metal reflector positioning

7. Each fuel assembly is treated as a heterogeneous system with the fuel pins, control rod guide tubes, and instrument guide tube modeled explicitly as illustrated by Figure 3.3-2.

8. The moderator is pure unborated water at a uniform density of 0.9982 g/cc. Uncertainties resulting from moderator density variation effects are considered by performing sensitivity calculations. A conservatively calculated bias is applied to assure that the final k_{eff} value assigned to the array is a maximum at any water density between 1.0E-4 and 1.0 g/cc.

9. A uniform axial burnup profile is assumed in CSAS2 irradiated fuel equivalence calculation cases. Consideration is given to variations in axial burnup as required by ANSI/ANS-8.17-1984; sensitivity calculations are performed and an appropriate bias is applied.

10. Irradiated fuel is assumed to be cooled 7.5 years following discharge from the reactor.

11. For irradiated fuel equivalence calculations, credit is taken for 34 major fission product absorbers identified as stable sources of negative reactivity in Reference 3.41. Quantitative estimates of negative reactivity credit taken for the major fission product absorbers at several representative initial enrichment points along Figure 3.3-3 reactivity equivalence curve are provided in Table 3.3-5.

Table 3.3-3 provides the nominal dimensions of the NUHOMS®-24P DSC and transfer cask geometry illustrated in Figure 3.3-1. Figure 3.3-1 also provides an illustration of the fuel array and reflectors modeled in CSAS2 for the nominal case.

B. Nominal Case (NUHOMS®-24P)

Referring to Figure 3.3-1, Figure 3.3-2, and Table 3.3-3, the following zones are explicitly modeled in the NUHOMS®-24P DSC nominal case CSAS2 analysis:

1. Nominal DSC basket geometry parameters
2. 0.369 inch OD fuel pellets (208 rods)
3. 0.430 inch OD Zircaloy fuel clad (208 rods)
4. Void gap between fuel and clad
5. 0.530 inch OD control rod guide tubes (16 tubes)
6. 0.493 inch OD instrument tube

The nominal case CSAS2 calculation in which 50,100 neutron histories are followed, results in a k_{eff} of 0.87170 with a 95 percent probability at a 95 percent confidence level uncertainty of ± 0.00488.

C. Criticality Analysis Variability (NUHOMS®-24P)

The bias and uncertainty methodology applied in the calculation of the NUHOMS®-24P DSC final k_{eff} result is based on CSAS2/123GROUPGMTH calculated results for the set of 40 critical experiments summarized in Table 3.3-6. All 40 critical experiments included in the method benchmark are similar to zero burnup/nominal case flooded DSC conditions (i.e., all are water moderated, low enrichment heterogeneous U02 systems). A representative number of the benchmark experiments include stainless steel separating materials and are very similar to the zero burnup/nominal case flooded DSC conditions. The inclusion of benchmark systems which differ from flooded DSC conditions in some respects, such as separating materials, is justified by inspection of the Table 3.3-6 k_{eff} results which do not indicate any significant trends. The calculated k_{eff} results for the diverse group of experiments analyzed demonstrates the calculational accuracy of the

method under a variety of conditions including conditions representative of the zero burnup/nominal case flooded DSC fuel storage array.

The UO_2 experiments summarized in Table 3.3-6 provide the basis for the method and library bias and variability used in the final k_{eff} calculation. Additional benchmark calculations are performed to demonstrate that the irradiated fuel criticality/equivalence method used is conservative when compared to the method bias basis UO_2 benchmark results. CSAS2/123GROUPGMTH benchmark results for systems containing PuO_2-UO_2 mixed oxide fuel pins are provided in the Table 3.3-7. Benchmark data representative of irradiated fuel assemblies is obtained from the results of CASMO-2 infinite lattice criticality calculations; the results of benchmark comparisons between CASMO-2 and CSAS2/CASMO2/SAS2 calculated k_{inf} values are provided in Table 3.3-8. Inspection of the benchmark results provided in Table 3.3-7 and Table 3.3-8 demonstrates that the criticality/equivalence method used in the subject calculations conservatively overpredicts k_{eff} for systems containing plutonium or irradiated fuel of the type proposed to be stored.

In addition to UO_2 experiments, the CSAS2/123GROUPGMTH method is validated against PuO_2 - UO_2 mixed oxide experiments (3.42) and k_{inf} results generated by CASMO-2E for irradiated B&W 15x15 fuel assembly arrays (3.43). The results of these additional validation runs indicate that the CSAS2/123GROUPGMTH method conservatively overpredicts k_{eff} for systems containing Pu and/or fission products.

D. Additional Biases and Uncertainties (NUHOMS®-24P)

The 95/95 uncertainty in the NUHOMS®-24P DSC nominal case analysis is 0.00488 Δk. A statistical bias of +0.00488 and a 95/95 uncertainty of 0.01161 Δk is associated with the CSAS2 method used. In addition to these uncertainties, there are other considerations which may effect the final k_{eff} value assigned to the array. These considerations are treated as either worst-case in the nominal run or sensitivity runs are performed to determine the Δk associated with a variable parameter (e.g., guide sleeve thickness).

Axial variation in burnup is taken into account in a series of calculations performed separate from the nominal irradiated fuel equivalence calculations. The nominal irradiated fuel equivalence calculations uses two dimensional (i.e., infinite axial extent) KENO models with uniform axial burnup profiles. In the axial burnup variation sensitivity runs, three dimensional KENO models are used to establish worst-case reactivity effects of non-uniform axial burnup with consideration of the presence of oversleeves in the upper and lower ends of the NUHOMS®-24P DSC basket. The three dimensional KENO models, illustrated by Figure 3.3-4, contain three axial BU fuel zones over the active fuel length and assume water reflection at both ends of the fully loaded DSC fuel array. A worst-case axial variation effect on storage array reactivity is established by generating k_{eff} results for five separate three dimensional axial burnup variation models, which varied the axial zone model geometry and burnups. Table 3.3-9 describes the axial burnup variation cases considered. All of the Table 3.3-9 cases correspond to

4.0 w/o U-235 initial enrichment fuel assemblies irradiated to a nominal "uniform burnup basis" of 40,000 MWD/MTU: this point in the enrichment burnup space is selected for the sensitivity analysis since the skewed axial burnup effects on reactivity should be maximized at the point near the top end of the reactivity equivalence curve (i.e., highest burnup requirement).

The combinations of axial zone geometries and burnups analyzed and described in Table 3.3-9 are developed based on a comprehensive review of axial burnup profiles generated by the EPRI-NODE computer program. A worst-case profile is selected based on this review which included fuel assembly burnups ranging from 10,000 to 50,000 MWD/MTU. The sensitivity cases described in Table 3.3-9 are based on the burnup profile considered to be worst-case as a result of this review; this burnup profile is shown in the Figure 3.3-5.

The axial variation sensitivity calculations, which included consideration of stainless steel oversleeves in the upper and lower ends of the NUHOMS®-24P DSC basket, resulted in the application of a relatively small positive reactivity bias to all the uniform burnup nominal irradiated equivalence cases analyzed. A bias proportional to equivalence point burnup is applied in each initial enrichment/burnup case analyzed.

E. Determination of Worst-Case Maximum k_{eff} (NUHOMS®-24P)

The worst-case maximum NUHOMS®-24P DSC array k_{eff} is determined by combining the nominal case results with the uncertainties and biases developed from the method benchmark calculations and the sensitivity studies performed for the DSC fuel storage array. The following are treated by applying a bias to the k_{eff} results calculated for the nominal case:

1. The nominal case, and all equivalence calculation cases, assumed the moderator is pure unborated water at a density of 0.9982 g/cc. Moderator density variation effects on reactivity are considered by performing 16 additional CSAS2 runs using the same zero burnup nominal case geometry model, with the pure water density varied over the 0.0001 to 1.0 g/cc density range. The results of these sensitivity runs are provided in Table 3.3-10. A bias accounting for optimum moderator density effects on DSC storage array reactivity is calculated based on these results. The bias applied, 0.02052 $\Delta k \pm 0.00660$ (two sigma), is equal to the maximum positive reactivity increase over the nominal 0.9982 g/cc moderator density case k_{eff} value observed for any sensitivity case analyzed.

2. The DSC and transfer cask walls are modeled as cuboids at positions corresponding to their closest actual approach to peripheral storage cell fuel regions in the nominal case model. A bias accounting for the worst-case positioning of the metal reflectors is developed by performing sensitivity calculations where the reflector distance from the fuel array is varied over a range of values, including a

3. pure water reflector case. The bias applied, 0.00802 Δk ±0.00508 (two sigma), corresponds to the maximum positive reactivity effect observed for the sensitivity cases analyzed over the nominal reflector position case.

4. A bias accounting for non-uniform axial burnup in PWR fuel assemblies is applied to the calculated nominal k_{eff} values in spent fuel equivalence calculations. A bias proportional to equivalence point burnup is calculated and applied for each equivalent initial enrichment/burnup case analyzed in the development of the Figure 3.3-3 reactivity equivalence curve. The biases applied in each initial enrichment/burnup case analyzed are provided in Table 3.3-11.

F. Uncorrelated Uncertainties (NUHOMS®-24P)

The following are treated and applied as uncorrelated tolerance uncertainties in the calculation of the final NUHOMS®-24P DSC storage array k_{eff}.

1. DSC guide sleeve center-to-center spacing varies nominally as shown in Figure 3.3-1. An uncertainty is calculated and applied by performing a sensitivity calculation which reduced the guide sleeve center-to-center spacings by the maximum applicable mechanical tolerances. The sensitivity calculation indicates that reducing the center-to-center spacings by the maximum tolerances could add as much as 0.01758 Δk (two sigma) to the nominal case k_{eff} value.

2. Fuel assemblies are centered in the guide sleeves in the nominal case model. An uncertainty is calculated and applied by performing a sensitivity calculation which considered a worst-case positioning of fuel assemblies in the inside corners (toward the central DSC axis). The sensitivity calculation indicates that a worst-case positioning of fuel assemblies in the DSC guide sleeves could add as much as 0.02551 Δk (two sigma) to the nominal case k_{eff} value.

3. The 12 gauge and 16 gauge stainless steel from which DSC guide sleeves are fabricated have a tolerance of ± 0.009 inch and 0.006 inch, respectively. An uncertainty is calculated and applied by performing a sensitivity calculation which considered worst-case guide sleeve thicknesses. The sensitivity calculation indicates that worst-case guide sleeve thicknesses could add as much 0.01304 Δk (two sigma) to the nominal case k_{eff} value.

4. DSC guide sleeve axial straightness tolerances (i.e., cell bowing) could reduce the water gap thickness between stored fuel assemblies. An uncertainty is calculated and applied by performing a sensitivity calculation which assumed a 0.15 inch reduction in water gap thickness for fuel assemblies stored in the central DSC guide sleeve locations. The sensitivity calculation indicates that such a reduction

in water gap thickness could add as much as 0.02157 Δk (two sigma) to the nominal case k_{eff} value.

5. The ability of the equivalencing method to conservatively calculate the reactivity of systems containing irradiated fuel is verified by comparing CASMO2/SAS2/CSAS2 calculated k_{inf} results for systems containing irradiated fuel to results for the same systems calculated by CASMO-2 in a stand-alone application (an irradiated fuel reactivity calculational method qualified by years of incore reactor physics applications). The lack of irradiated fuel critical experiment benchmark data with which to fully qualify the CASMO2/SAS2/CSAS2 reactivity equivalencing method resulted in the application of an uncertainty, however. A conservative uncertainty equivalent to five percent of the total amount of reactivity change due to irradiation is calculated and applied for each initial enrichment/burnup case analyzed in the reactivity equivalence calculations. The uncertainties applied in each initial enrichment/burnup case analyzed are provided in Table 3.3-11.

G. Analysis Results (NUHOMS®-24P)

The main conclusion of the criticality analysis is that the calculated worst-case k_{eff} value for a fully loaded NUHOMS®-24P DSC flooded with pure unborated water of a uniform optimum density, including uncertainties, is 0.94782. Conclusions regarding specific aspects of the methods used or the analyses presented can be drawn from the quantitative results presented in the associated tables. The resulting final k_{eff} value represents a maximum with a 95 percent probability at a 95 percent confidence level.

The following equation is used to develop the final k_{eff} result for the DSC fuel storage array:

$$k_{eff} = \text{k-nominal} + \text{B-method} + \text{B-axial} + \text{B-mod} + \text{B-ref} + [(\text{ks-nominal})^2 + (\text{ks-method})^2 + (\text{ks-axial})^2 + (\text{ks-mechanical})^2 + (\text{ks-reflector})^2 + (\text{ks-burnup})^2 + (\text{ks-mod})^2]^{1/2}$$

Where:

k-nominal	=	Nominal case k_{eff}
B-method	=	Method bias
B-axial	=	Bias accounting for non-uniform axia mup in PWR fuel assemblies (irradiated fuel cases onl

B-mod	=	Bias accounting for worst-case moderator density conditions
B-ref	=	Bias accounting for worst-case metal reflector positioning
ks-nominal	=	95/95 uncertainty in the nominal case k_{eff} value
ks-method	=	95/95 uncertainty in the method bias
ks-axial	=	95/95 uncertainty in the non-uniform axial burnup bias
ks-mechanical	=	95/95 uncertainty resulting from material and construction tolerances and positioning uncertainties
ks-reflector	=	95/95 uncertainty in the bias accounting for worst case metal reflector model assumptions
ks-burnup	=	Uncertainty in the equivalencing method results
ks-mod	=	95/95 uncertainty in the moderator density effects bias

Substituting the appropriate values for the nominal, zero-burnup case:

$k_{eff} = 0.94782$

All values of burnup used to develop the Figure 3.3-3 equivalence curve are selected to maintain k_{eff} equal to or below 0.94782.

Components of the final k_{eff} result for all cases analyzed are provided in Table 3.3-11. Additional information on the NUHOMS®-24P DSC criticality analysis with burnup credit is contained in Appendix F.

3.3.4.1.4 Off-Normal Conditions (NUHOMS®-24P)

Postulated off-normal conditions do not result in a NUHOMS®-24P DSC storage array reactivity which exceeds the k_{eff} value calculated and presented in Section 3.3.4.1.3.

The off-normal conditions considered include misloading of one or more high enrichment nonirradiated fuel assemblies into the DSC, and optimum moderation.

A. Misloading a High Enrichment Assembly

Misloading one or more fuel assemblies which do not qualify as acceptable for storage in the NUHOMS®-24P DSC according to the burnup equivalence curve shown in Figure 3.3-3 do not result in a k_{eff} value greater than the 0.95 criterion. The double contingency principle of ANSI/ANS 8.17-1984 can be applied to take credit for dissolved boron which is normally present in the PWR spent fuel pool and DSC during wet loading operations. The approximate 0.34 Δk negative reactivity provided by 2,000 ppm of soluble boron would more than compensate for the additional reactivity added by the misloading of one or more unqualified, high enrichment fuel assemblies. In addition, a higher acceptance limit of k_{eff} $\leq$0.98 for wet loading and off-loading is justified for this off-normal case in accordance with ANSI/ANS 57.2-1983 as discussed in Appendix F.

B. Optimum Moderation

Optimum moderation conditions are considered and a conservative bias is applied in the normal case analysis presented in Section 3.3.4.1.3. Therefore, the presence of a pure water moderator of optimum density does not result in a NUHOMS®-24P DSC storage array reactivity which exceeds the k_{eff} value calculated and presented in Section 3.3.4.1.3. Further, it is possible that moderator densities other than unity could occur if moderator boiling temperatures were to be reached; however, unirradiated high enriched fuel provides no decay heat for moderator heating. Thus, this is a non-mechanistic unrealistic condition. The condition can be conceived for optimal moderation for irradiated fuel with high decay heats; however, the reactivity of the fuel is significantly reduced compared with that of unirradiated fuel.

3.3.4.1.5 Safety Criteria Compliance (NUHOMS®-24P)

The calculated worst-case k_{eff} value for a fully loaded NUHOMS®-24P DSC flooded with pure unborated water of a uniform optimum density is 0.94782. This calculated maximum k_{eff} value includes consideration of geometrical, material, and burnup uncertainties and biases at a 95/95 tolerance level as required by ANSI/ANS 57.2-1983 to demonstrate criticality safety.

Additionally, off-normal conditions potentially resulting in reactivity increases over the normal conditions considered are addressed and found to be acceptable.

The analyses presented in this SAR section and Appendix F demonstrate that the ANSI/ANS 57.2-1983 criteria limiting k_{eff} to 0.95 is satisfied under all postulated conditions for the NUHOMS®-24P DSC.

3.3.4.2 NUHOMS®-52B DSC Criticality Safety

3.3.4.2.1 Control Methods for the Prevention of Criticality

A. General Methodology (NUHOMS®-52B)

The NUHOMS®-52B DSC is designed to provide criticality control through a combination of mechanical and neutronic isolation of fuel assemblies as described in the following paragraphs. A support structure composed of four axially oriented support rods and nine spacer disks provides positive location for the fuel assemblies under both normal and accident conditions. The basket assembly utilizes fixed neutron absorbers which effectively decouple fuel assemblies.

The neutron absorber is a borated stainless steel which can be supplied with boron additions up to 2% to provide thermal neutron absorption. This license application is for 0.75% minimum boron content absorber material. Although borated stainless steel would be an effective load bearing component in the basket assembly, the NUHOMS®-52B DSC basket assembly has been designed such that the neutron absorbers are in no way loaded by other DSC structural components or the spent fuel assemblies. The absorber sheets are fastened to and supported by the basket assembly spacer disks. As a result, the sheets are captured such that no welding or bending is performed on them during fabrication.

Borated stainless steel is chosen for the neutron absorbers due to its desirable neutron attenuation, homogeneity, corrosion resistance, strength, and toughness. Commercial experience with borated stainless material includes a wide range of applications such as the TN-REG and TN-BRP transport/storage casks, Indian Point fuel storage racks, and scram balls in British Magnox reactors.

The principal performance features of the NUHOMS®-52B DSC as they relate to criticality control are:

1. The canister is designed such that it would be subcritical if water were to leak into the containment system.

2. The canister will remain subcritical during all conditions of storage, including full immersion in a design basis flood.

3. The criticality analyses are performed with consideration for

   a. the most reactive credible configuration consistent with the chemical and physical form of the fuel,

   b. moderation by water to the most reactive credible extent,

   c. close reflection by water on all sides,

4. The canister will remain subcritical with close water reflection and optimum interspersed hydrogenous moderation.

B. Design Parameters for the Criticality Model (NUHOMS®-52B)

Figure 3.3-6 and Figure 3.3-7 show the general arrangement of the KENO models. All 52 fuel assemblies are included in the model as well as the DSC support rods, DSC shell, and the transfer cask.

The layout of a typical fuel assembly cell is shown in Figure 3.3-8. It is composed of one or two neutron absorber sheets in the orientation shown in Figure 3.3-6, a Zircaloy-4 fuel channel, a fuel assembly unit, and moderator. The KENO models include a thin layer of non-borated stainless steel "skin" on each side of the sheet which is assumed to exist as a result of the manufacturing process. The thickness of this skin is assumed to be 0.007" for all thicknesses of absorber sheet.

The neutron absorber material properties assumed for the criticality analysis are:

Finished plate thickness:	0.1345" ± 0.012"[1]
Stainless "Skin" thickness	0.007" maximum, each side
Boron content	0.75 w/o minimum
B-10 enrichment	none (natural boron)
Plate density	7.76 g/cc minimum

[1] Plate thicknesses up to 0.16" are acceptable

Assuming that the areal boron loading is the pertinent design feature, it is possible to convert these parameters into ones more suitable for procurement. The specification for borated stainless steel need only include the plate thickness and areal boron loading. The equivalent minimum boron areal density is calculated below for one square centimeter of absorber:

(0.1345-0.012-2*0.007 in)(2.54 cm/in) *

(7.76 g/cc)(0.0075 g boron/g steel)/(1 cm^2)

= 0.016 g/cm^2

= 16 mg boron per cm^2

An equivalent neutron absorber specification for absorber plate material with or without the "skin" assumed in the analysis is therefore:

Material:	Borated Stainless Steel
Finished plate thickness:	0.1345" ± 0.012"[1]
Areal boron content:	16 mg boron per cm^2, minimum
B-10 enrichment:	None (natural boron)

The fuel assembly unit indicated on Figure 3.3-8 is illustrated in Figure 3.3-9 for the example of a 7x7 fuel design. All the KENO models are full pin-by-pin representations. Fuel pellet, pellet gap, Zircaloy cladding, and inter-rod moderator regions are all individually represented.

3.3.4.2.2 Criticality Analysis Methods (NUHOMS®-52B)

The NUHOMS®-52B criticality calculations are performed using the microcomputer application KENO-Va (3.52) and the Hansen-Roach 16-group (HR-16) cross section working library. This code is ported directly from the mainframe computer version of KENO-Va (3.53).

VECTRA has developed a computer program named PN-HET (PNFSI-Heterogeneous/Resonance Effects Calculator) to calculate σ_p given basic atom density, geometric, and cross section data. PN-HET produces four U-235 and U-238 atom densities and their corresponding H-R cross section library IDs based on the calculated σ_p for use in the KENO input deck.

[1] Plate thicknesses up to 0.16" are acceptable

An extensive verification and validation of KENO-Va, the HR-16 working cross section library, and the resonance/heterogeneous effects calculation program PN-HET has been performed by VECTRA (3.54). It was concluded that KENO-Va/HR-16/PN-HET slightly overpredicts k_{eff} and that no significant biases are present due to system parameters such as fuel enrichment, absorber characteristics, fuel/moderator volume ratios, etc. Further discussion of the calculational bias is presented below.

3.3.4.2.3 Criticality Evaluation

This section presents the analyses which demonstrate the acceptability of storing qualified fuel in the NUHOMS®-52B DSC under normal fuel loading, handling, and storage conditions. A nominal case model is described and a neutron multiplication factor, k_{eff}, presented. Uncertainties are addressed and applied to the nominal calculated k_{eff} value. The final k_{eff} value produced represents a maximum with a 95 percent probability at a 95 percent confidence level as required by ANSI/ANS-57.2-1983 (3.46) to demonstrate criticality safety.

A. Basic Assumptions (NUHOMS®-52B)

1. No credit is taken for neutron absorption in fission products.

2. No credit is taken for neutron absorption in burnable poison rods.

3. Natural uranium blankets and axial or radial enrichment zones are not modeled. It is assumed that the fuel assemblies are of uniform enrichment everywhere.

4. KENO models ignore the presence of DSC spacer disks. This modeling approach is conservative since spacer disks produce a localized region where the interassembly moderator is significantly reduced. It is assumed that this reduction would result in a locally undermoderated situation that would have a negative impact on k_{eff}. In parallel, steel has a higher absorption cross section than water and therefore more neutrons are lost to absorption in the real system than in the cask model. Bierman (3.55) concluded that thick steel walls are a better reflector than water alone, and that thin sheets tended to act as a poison. Although these conclusions are regarding full length reflecting walls, not a spacer disk geometry, it is reasonable to assume that the spacer disks, which form a lattice in and around the assemblies, would tend to poison the system.

5. The DSC support rods, due to their axial orientation and proximity to the fuel, are included in the KENO models.

6. Specular albedo conditions are specified at the axial ends of the KENO models thereby neglecting end leakage of neutrons. This technique yields a slightly conservative result due to the neglect of axial neutron leakage.

7. The layout of a typical fuel assembly cell is shown in Figure 3.3-8. It is composed of one or two neutron absorber sheets in the orientation shown in Figure 3.3-6, a Zircaloy-4 fuel channel, a fuel assembly unit, and moderator. The KENO models include a thin layer on non-borated stainless steel "skin" on each side of the sheet which is assumed to exist as a result of the manufacturing process. The thickness of this skin is assumed to be 0.007" for all thicknesses of absorber sheet.

8. The fuel assembly unit indicated on Figure 3.3-8 is illustrated in Figure 3.3-9 for the example of a 7x7 fuel design. All the KENO models are full pin-by-pin representations. Fuel pellet, pellet gap, Zircaloy cladding, and inter-rod moderator regions are all individually represented.

9. The DSC is modeled as finite in lateral extent and infinite in axial extent. Reflective boundary conditions are specified outside the cask.

10. Geometrical and material uncertainties due to mechanical tolerances are treated by either using worst-case configurations or by performing sensitivity calculations and obtaining appropriate uncertainty values. The uncertainties considered included:

    a) Fuel assembly design
    b) Fuel assembly position
    c) Storage cell location
    d) Neutron absorber boron content
    e) Neutron absorber sheet thickness
    f) Neutron absorber sheet width
    g) Moderator density
    h) Fuel enrichment

11. The moderator is pure unborated water at a uniform density of 0.9982 g/cc. Uncertainties resulting from moderator density variation effects are considered by performing sensitivity calculations. A conservatively calculated bias is applied to assure that the final k_{eff} value assigned to the array is a maximum at any water density between 0.005 and 1.0 g/cc.

B. Nominal Case (NUHOMS®-52B)

The nominal KENO case represents 52 GE-2 7x7 fuel assemblies centered in the storage locations. The characteristics of the design basis fuel, the DSC and basket, and the transfer cask are summarized in Table 3.3-12, Table 3.3-13, and Table 3.3-14. Regional atom densities used in the KENO models are summarized in Table 3.3-15.

The nominal case KENO-Va calculation result for 50,000 neutron histories is $k_{eff} = 0.87894 \pm 0.00318$ (1σ).

C. Criticality Analysis Variability (NUHOMS®-52B)

An extensive suite of benchmark problems was run for the VECTRA KENO-Va verification (3.54). The cases included were 134 Pacific Northwest Laboratories (PNL) critical experiments, 14 Babcock and Wilcox critical experiments, and 2 PNL subcritical experiments (3.55-3.60). The benchmarks are representative of critical or subcritical arrays of commercial light water reactor fuels with the following characteristics:

1. Water moderation
2. Neutron absorbers:
   a) no special neutron absorbers,
   b) neutron absorption by fixed sheets,
   c) neutron absorption by aqueous solutions.
3. Unirradiated light water reactor type fuel (no fission products or "burnup credit") near room temperature (vs. reactor operating temperature)
4. Close reflection:
   a) no specific reflector,
   b) steel,
   c) lead.

Based on the largest statistical population available for analysis, 123 of the PNL critical benchmarks, the KENO5A/HR-16 group cross section calculational bias is -0.00859 ± 0.00458 (1 standard deviation). Since 2σ is greater than Δk, the calculational bias and uncertainty associated with the KENO-Va/HR-16/PN-HET methodology is statistically

attached to the computed system k_{eff}s. The benchmark results are summarized in Table 3.3-16 and Figure 3.3-11.

D. Additional Biases and Uncertainties (NUHOMS®-52B)

Due to the capability of KENO-Va to literally model the DSC/cask geometry, there are no additional computational biases or uncertainties. Certain mechanical uncertainties are considered, though, and they are discussed in the following sections.

Detailed KENO calculations are performed to determine which BWR fuel design is most reactive in the NUHOMS®-52B system geometry. KENO models are constructed for each candidate fuel design, or a similar design assumed to be equivalent or more reactive, in the flooded DSC/cask configuration.

The fuel design parameters which are considered to have an impact on criticality are: array size, number of fueled rods, rod pitch, metric tons of heavy metal (MTIHM), fuel rod diameter, active fuel length, cladding thickness, and fuel pellet diameter. Of these parameters, those which impact the ratio of fuel to moderator are considered to have the greatest impact: array size, number of fueled rods, rod pitch, fuel rod diameter, and fuel pellet diameter.

All fuel designs analyzed are found to have equivalent reactivity in the NUHOMS®-52B configuration (all k_{eff}s were within two standard deviations). General Electric 7x7 fuel (designated GE-2 7x7, V2) (3.61) is selected for the design basis fuel for subsequent calculations. Additional uncertainty or bias due to fuel design is included in the KENO calculations as a bias should it be necessary.

The fuel designs in Table 3.3-17, and any reload fuel having identical design parameters important to criticality, are qualified for storage in the NUHOMS®-52B system.

E. Determination of Worst-Case Maximum k_{eff} (NUHOMS®-52B)

The worst-case maximum NUHOMS®-52B DSC array k_{eff} is determined by combining the nominal case results with the uncertainties and biases developed from the method benchmark calculations and the sensitivity studies performed for the DSC fuel storage array.

F. Uncorrelated Uncertainties (NUHOMS®-52B)

1. Fuel Assembly Position Uncertainty

The fuel assembly position studies indicate that the NUHOMS®-52B system is overmoderated with respect to the inter-assembly moderator. When assemblies are moved uniformly inward from their nominal positions, k_{eff} rises; when assemblies are moved uniformly outward, k_{eff} falls.

The total offset from the spacer disk hole centerline and the centroid of the fuel assembly and flow channel is calculated by assuming the thinnest allowable neutron absorber sheet concurrent with the worst-case tolerance stack.

The results of the parametric studies are summarized in Table 3.3-18 and Figure 3.3-12. The maximum offset is calculated to be 0.329". Δk_{POS}, the resulting change in k_{eff} due to fuel assembly position, is extrapolated from a third-order fit to the curve in Figure 3.3-12 as 0.02382. U_{POS}, the associated uncertainty in the KENO run and numerical fit used to derive Δk_{POS} is 0.00495. Combining these, the 95/95 uncertainty in k_{eff} due to fuel assembly position is 0.03372.

2. Storage Cell Location

A parametric study is performed to determine the effects of the mechanical tolerances on hole locations in the spacer disks. The neutron absorber plates and fuel assemblies are moved the maximum tolerance in x and y simultaneously. Fuel assemblies are assumed to be centered in the storage cells.

No statistically significant effect was noted for this manufacturing tolerance. Both cases examined had a slightly higher reactivity than the baseline case. The amount of uncertainty in k_{eff} due to storage cell location, Δk_{LOC}, is 0.00833. U_{LOC}, the KENO uncertainty is 0.00311. The total 95/95 uncertainty is 0.01455.

Since there is no causal relationship between mechanical tolerances in the storage cell locations and where fuel assemblies come to rest within the storage locations, the two uncertainties are combined as uncorrelated uncertainties.

3. Neutron Absorber Boron Content

The sensitivity of k_{eff} to neutron absorber boron content is studied in a series of six parametric cases. The results are shown in Table 3.3-19 and Figure 3.3-13. In each case, the weight percent of the borated steel is varied. As can be seen in Figure 3.3-13, a "knee" is evident in the curve between 0.5 and 1.0 weight percent. Above 1.5%, the curve flattens out indicating that the additional boron is less effective above that concentration.

Since the neutron absorber sheet boron concentration is specified as a minimum, the only uncertainty in k_{eff} which would arise from concentration uncertainties would have a negative effect on the system reactivity. For conservatism, the boron uncertainty is taken to be zero.

4. Neutron Absorber Sheet Thickness

Six parametric cases are run to determine the effects of neutron absorber sheet thickness on the system reactivity.

The sheets are specified as 0.134 inches thick[1]. In order to provide analytical margin for manufacturing nonconformances, the standard mill tolerance specified in the ASME Code (3.14) (±0.012") are used to establish a thickness uncertainty in k_{eff}. In this manner, sheets as thin as 0.1345 -0.012 = 0.1225" are acceptable from a criticality standpoint.

The results of the sheet thickness study are shown in Table 3.3-20 and Figure 3.3-14. Δk_{THK}, the uncertainty in k_{eff} due to neutron absorber sheet thickness, is calculated to be .00714. U_{THK}, the KENO uncertainty and uncertainty in the numerical fit used to derive Δk_{THK}, is 0.00639. The total 95/95 uncertainty in k_{eff} due to absorber sheet thickness is 0.01922.

5. Neutron Absorber Sheet Width

The specified neutron absorber sheet width is 6.30 ± 0.04 inches (indicated on Figure 3.3-15). In order to assess the importance of sheet width variations, both within specification and in the event of fabrication nonconformances, six

(1) The KENO models were performed for true 10 gage sheet thickness, 0.1345". The drawings are limited to three places of precision, thus 0.134".

parametric cases are run to determine the effects of the neutron absorber width on k_{eff}.

The results of the absorber sheet width study are presented in Table 3.3-21 and Figure 3.3-15. Two conclusions are apparent from the results.

First, within the specified width tolerance band, there is no statistically meaningful change in k_{eff}. In the final calculation of the system k_{eff}, there is therefore no uncertainty in k assigned to account for mechanical uncertainties in neutron absorber sheet width.

By examining other sheet widths beyond that range, there arises a second conclusion. There is a knee in the reactivity curve which becomes apparent at around 6.0 inches and becomes fully established as the sheet width narrows down to the fuel assembly width (the fuel channel is 5.454" O.D.). This can be attributed to the "view factor" between adjacent fuel assemblies. The strongest neutronic coupling occurs between neighboring assemblies across their faces. Additional decoupling of diagonal neighbor fuel assemblies (as in the 7.0 inch case) does little to decrease the system reactivity.

It can therefore be concluded that above 6.0" width (for <u>all</u> sheets), k_{eff} is not strongly dependent on the sheet width. Manufacturing nonconformances resulting in narrow regions on absorber sheets are acceptable without further analysis if the minimum width is no less than 6.0 inches. Narrow sheet regions must not, of course, interfere with the ability of the spacer disks to support the sheets. This permission is further substantiated by the discussion of missing absorber sheets below.

6. Moderator Density

Normal operation of the NUHOMS®-52B system includes draining, vacuum drying, and, possibly, reflooding of the DSC. During these operations, it is anticipated that moderator densities will be near 1.0 g/cc (full density water), or near 0 g/cc (steam).

It can be postulated, however, that the bulk moderator density could be anything between the two extremes considering the range of temperatures and pressures which could be postulated to exist in the DSC during unusual operational states (boiling, reflood spray, etc.).

In order to demonstrate system safety under all moderator conditions, a series of KENO runs is performed. The moderator density is varied between 1.0 g/cc to

near zero. The system reactivity is noted be monotonically decreasing with moderator density as indicated in Table 3.3-22 and Figure 3.3-16.

The highest reactivity occurs at 1.0 g/cc density which could only occur if very cold (4°C) water are introduced to the DSC. Since there are no operating limitations on water temperature, the increase in reactivity, $\Delta k_{MOD} = 0.00728$, is included in the calculation of final k_{eff} as an uncorrelated uncertainty. U_{MOD}, the uncertainty in the KENO run is 0.00495. The resulting 95/95 uncertainty in k_{eff} due to moderator density is 0.01718.

G. Analysis Results (NUHOMS®-52B)

The calculated maximum k_{eff} for the standardized NUHOMS®-52B includes all biases and uncertainties applicable to the calculational methodology and the design. The following relationship is used to combine the biases and uncertainties to arrive at the 95/95 maximum k_{eff}.

$$k_S = k_{NOM} - B_{KENO} - U_{NOM} - B_F - \sqrt{U_{NOM}^2 + U_{KENO}^2 + U_{MECH}^2}$$

$$= 0.87894 - 0.00859 + 0.00177 + \sqrt{0.00636^2 + 0.00916^2 + 0.04517^2} \quad (1)$$

$$= 0.919$$

where k_S = system 95/95 reactivity

k_{NOM} = KENO calculated k_{eff} for nominal conditions

B_F = Fuel design bias

B_{KENO} = KENO method bias

U_{NOM} = uncertainty in the KENO results (2σ)

U_{KENO} = uncertainty in the KENO bias (2σ)

U_{MECH} = mechanical uncertainty (2σ)

All the mechanical uncertainties are considered independent, hence they are calculated by adding in quadrature. The previous sections and Table 3.3-24 provide detailed discussion of each of the terms in U_{MECH}.

3.3.4.2.4 Off-Normal Conditions (NUHOMS®-52B)

A. Misloading of One or More Unirradiated Fuel Assemblies into the DSC

The NUHOMS®-52B criticality analysis does not include credit for burnup. All fuel is assumed to be unirradiated, therefore there is no impact on k_{eff} if such fuel is inadvertently loaded.

B. Optimum Moderation

The moderator density study reveals that intermediate moderator densities (as in boiling or reflood splashing) have a negative effect on reactivity. It is determined, however, that very cold water (with a slightly higher density than 20°C water) would result in a slightly higher k_{eff}. This effect is included in the baseline k_{eff} as part of the mechanical uncertainty.

C. Loss of an Absorber Panel

Loss of one or more absorber sheets is not proposed as a credible accident. It is included only to demonstrate the inherent criticality safety of the NUHOMS®-52B design. The analysis is performed by analyzing the system with first one, then four of the central neutron absorbing sheets absent from the model.

The results are summarized in Table 3.3-23. This design is capable of suffering the loss of an entire central absorber sheet (presumably the most important sheet) with a positive reactivity change of only 0.010 Δk. Clearly, manufacturing defects in the specified width, thickness, or straightness of a single sheet would have negligible impact on the overall system reactivity. Removal of the innermost four absorber sheets, however, would result in an increase in k_{eff} of 0.050 Δk.

D. Flooded ISFSI Site

The flooded site case is modeled using KENO and is found to have a reactivity of approximately 0.34; thus it is not a limiting scenario.

3.3.4.2.5 Safety Criteria Compliance (NUHOMS®-52B)

The calculated worst-case k_{eff} value for a fully loaded NUHOMS®-52B DSC flooded with pure unborated water is 0.919. This calculated maximum k_{eff} includes consideration of

all calculational, geometrical, and material uncertainties and biases at a 95/95 tolerance level as required by ANSI/ANS 57.2-1983 to demonstrate criticality safety.

Additionally, there are no credible off-normal conditions which could increase reactivity beyond the normal conditions considered above.

The analyses presented in this SAR section demonstrate that the ANSI/ANS 57.2-1983 criteria limiting k_{eff} to 0.95 is satisfied under all postulated conditions for the NUHOMS®-52B.

3.3.5 Radiological Protection

The NUHOMS® ISFSI is designed to maintain on-site and off-site doses ALARA during transfer operations and long-term storage conditions. ISFSI operating procedures, shielding design, and access controls provide the necessary radiological protection to assure radiological exposures to station personnel and the public are ALARA. Further details on on-site and off-site doses resulting from NUHOMS® ISFSI operations and the ISFSI ALARA evaluation are provided in Chapter 7.

3.3.5.1 Access Control

The NUHOMS® ISFSI is located within the owner controlled area of the plant. A separate protected area consisting of a double fenced, double gated, lighted area is generally installed around the ISFSI. Access is controlled by locked gates, and guards are stationed when the gates are open. The licensee's Security Plan should describe the remote sensing devices which are employed to detect unauthorized access to the facility.

In addition to the controlled access, a method of providing a security tamper seal may be implemented after insertion of a loaded DSC. The form to use could be, but is not limited to, one of the following:

Tack welding an HSM access door

Fully welding an HSM access door

Tack welding 2 or more closure bolts on the HSM access door

Tamper seals

Existing HSM closure bolt torquing

The HSM access door weighs approximately three tons and requires heavy equipment for removal. This ensures that there is ample time to respond to an unauthorized entry into the ISFSI before access can be gained to any radiological material.

3.3.5.2 Shielding

For the NUHOMS® system, shielding is provided by the HSM, transfer cask, and shield plugs of the DSC. The NUHOMS® standardized HSM is designed to minimize the surface dose to limit occupational exposure and the dose at the ISFSI fence. Experience has confirmed that the dose rates for the HSM are extremely low. A shield wall may be removed for a period of time as part of facility installation or expansion. However, if applicable, compensatory measures shall be taken for radiation shielding. The NUHOMS® transfer cask and the DSC top shield plug are designed to limit the surface dose rates (gamma and neutron) ALARA. Temporary neutron shielding may be placed on the DSC shield plug and top cover plate during closure operations. Similarly, additional temporary shielding may be used to further reduce surface doses. Radiation zone maps of the HSM, cask, DSC surfaces and the area around these components are provided in Chapter 7.

3.3.5.3 Radiological Alarm Systems

There are no radiological alarms required for the NUHOMS® ISFSI.

3.3.6 Fire and Explosion Protection

The NUHOMS® HSM and DSC contain no flammable material and the concrete and steel used for their fabrication can withstand any credible fire hazard. There is no fixed fire suppression system within the boundaries of the ISFSI. The facility should be located such that the plant fire brigade can respond to any fire emergency using portable fire suppression equipment.

ISFSI initiated explosions are not considered credible since no explosive materials are present in the fission product or cover gases. Externally initiated explosions are considered to be bounded by the design basis tornado generated missile load analysis presented in Section 8.2.2. Licensees are required by 10CFR72 Subpart K to confirm that no conditions exist near the ISFSI that would result in pressures due to off-site explosions which would exceed those postulated herein for tornado missile or wind effects. An HSM shield wall(s), which protects against missiles, may be removed for a period of time. However, compensatory measures shall be considered to protect against missiles, if necessary.

Although not explicitly required by the current 10CFR72 (no specific load case), the NUHOMS® design has been reviewed with regard to its susceptibility to sabotage. The issue of sabotage was addressed during public hearings on the VECTRA Standardized NUHOMS® system (3.67). The specific issues related to sabotage discussed during this hearing were attacks by a truck bomb, a hand held bomb, and a shaped charge placed by saboteurs approaching on foot.

A summary of the conclusions of this review reflecting the expert opinion [3.67] from the public hearing testimony are presented below:

Due to the rugged construction of the HSM, it would take large amounts of explosive (more than 50,000 lbs. of explosive) at very close distances in order to inflict any severe damage to the NUHOMS® facility. It was determined that, due to plant security and vehicle barriers, the scenario of truck bombs is not a feasible scenario. In addition, an explosion resulting form a shaped charge or hand held bomb was not deemed to be severe enough to penetrate a 24" thick concrete shield wall, a 6" air gap, another 18" thick interior concrete wall, and then through the 5/8" thick stainless steel shell of the DSC to cause a leak of radioactive material.

Considering the scenario of someone placing a shape charge inside the HSM through the bottom air vent at a distance below dry shielded canisters sufficient to cause leakage of radioactive material, experiments show [3.67] that the amount of leakage (escape) is much less than 1% of the inventory. The majority of the leakage would remain within the HSM shielded by the concrete walls, rather than escaping through the vents. Consequently, any potential release of radioactive material would be minor.

It should also be noted that a recent regulatory mandate [3.68 and 3.69] has required all U.S. utilities owning and operating nuclear plants to evaluate and protect their facility against the threat of sabotage by car or truck bomb. This evaluation has resulted in increased protection of the plant's vital areas through adoption of explosion-proof barriers and gates. Site specific ISFSI locations within the plant's protected area would be subject to the requirements of this mandate, thus requiring the applicants to ensure the same level of barrier protection for ISFSIs to safeguard against possible sabotage.

Licensees are required to verify that loadings resulting from potential fires and explosions are acceptable in accordance with 10CFR72.212(b)(2).

3.3.7 Materials Handling and Storage

3.3.7.1 Spent Fuel Handling and Storage

All spent fuel handling outside the plant's fuel pool is performed with the fuel assemblies contained in the DSC. Subcriticality during all phases of handling and storage is discussed in Section 3.3.4. The criterion for a safe configuration is an effective mean plus two-sigma neutron multiplication factor (k_{eff}) of 0.95. Section 3.3 calculations show that the expected k_{eff} value is below this limit.

Lift height restrictions are imposed on the TC and DSC with regard to their location and load temperatures. These restrictions are provided in Section 10.3.13.

3.3.7.1.1 Cladding Temperature Limits

Maximum allowable cladding temperature limits are determined for both BWR and PWR design basis fuel according to the methodology presented in Reference 3.21. The maximum allowable average cladding temperature for long term storage is based on the end of life hoop stress in the cladding and the cladding temperature at the beginning of dry storage. The method is estimated to calculate a storage temperature limit that will result in a probability of cladding breach of less than 0.5% in the peak rod during storage. Using this methodology produces cladding temperature limit of 384°C for design basis PWR fuel and 421°C for the design basis BWR fuel cooled for five years or more. Since the damage mechanism in this methodology is thermal creep, the temperature limits are based on an average long term ambient temperature during storage of 70°F.

Higher cladding temperatures may be sustained for brief periods without affecting cladding integrity, however. During short term conditions such as DSC drying, transfer of the DSC to and from the HSM, and off-normal and accident temperature excursions, the maximum fuel cladding temperature is limited to 570°C (1,058°F) or less. This value is based on the results of experiments which have shown that Zircaloy clad rods subjected to short term temperature excursions below 760°C did not show indications of failure (3.20).

3.3.7.1.2 Fuel Rod Horizontal Storage Effects

There is considerable industry experience in the shipment of fuel assemblies in the horizontal position without any indication of fuel rod creep or sag. During overseas shipments, spent fuel assemblies remain horizontal for up to two to three months with estimated cladding temperatures up to 385°C. It should also be noted that the environment for shipping fuel assemblies, given the handling and transportation shock loadings and vibrations is much harsher than that of passive environment of dry storage.

Analytical studies of fuel rod creep behavior have also been conducted in conjunction with the NRC approval of the NUHOMS®-24P TR as documented in Reference 3.51. The studies utilized the creep equation of M. Peehs, et. al. to determine whether creep of fuel were found to be less than 1% for the total storage period. The deflection of the fuel rods between spacer grids was calculated directly since creep effects were found to be negligible. Using standard beam theory for a uniformly loaded tubular beam, conservatively neglecting the bending stiffness of the fuel itself, the maximum deflection over the storage period was found to be 0.015 inches. Deflections of such magnitude do not impede retrieval of the fuel assemblies from the DSC, therefore these effects are not evaluated further.

3.3.7.1.3 Surface Contamination Limits

DSC exterior contamination is minimized by preventing spent fuel pool water from contacting the DSC exterior. DSC loading procedures require that the annulus between the transfer cask and DSC be filled with demineralized water and sealed prior to

immersion in the spent fuel pool. Annulus sealing is accomplished by an inflatable seal between the transfer cask and DSC. The combination of the above operations provides assurance that the DSC exterior surface has less residual contamination than required for shipping cask externals (3.22) Table V, 10CFR71.87(i)(1). Surface swipes of the DSC exterior are taken while in the cask decon area to assure that the maximum DSC removable contamination does not exceed:

Beta/Gamma Emitters	2,200 dpm/100 cm^2
Alpha Emitters	220 dpm/100 cm^2

Transfer cask external contamination is minimized by the use of smooth, easily decontaminated surface finishes to minimize personnel radiation exposures during cask handling operations outside the spent fuel pool. 49CFR173.443(d) (3.64), which governs contamination levels for off-site shipment in a closed exclusive use vehicle, is used as a basis for the transfer cask maximum removable contamination limits as:

Beta/Gamma Emitters	2,200 dpm/100 cm^2
Alpha Emitters	220 dpm/100 cm^2

Containment of radioactive material associated with spent fuel assemblies is provided by fuel cladding, the DSC stainless steel shell, and double seal welded inner and outer closures.

3.3.7.2 Radioactive Waste Treatment

No radioactive waste is generated during the storage period for the NUHOMS® DSC. Radioactive wastes generated during DSC loading operations (contaminated water from the spent fuel pool and potentially contaminated air and helium from the DSC cavity) are treated using existing plant system and procedures as described in Chapter 6.

3.3.7.3 On-site Waste Storage

The requirements for on-site waste storage are satisfied by existing plant facilities for handling and storage of waste from the spent fuel pool and dry active wastes as described in Chapter 6.

3.3.8 Industrial and Chemical Safety

No hazardous chemicals or chemical reactions are involved in the NUHOMS® system loading and storage operations. Industrial safety relating to handling of the cask and DSC are addressed by the licensee's procedures which meet the Occupational Safety and Health Administration (OSHA) requirements.

Table 3.3-1
NUHOMS® System Components Important to Safety

1. **Dry Shielded Canister**
   - 1a. Internal basket assembly
   - 1b. Top and bottom shield plugs
   - 1c. DSC containment pressure boundary

2. **Horizontal Storage Module**
   - 2a. DSC support structure
   - 2b. HSM reinforced concrete and structural steel
   - 2c. HSM passive ventilation system

3. **On-site Transfer Cask**
   - 3a. Shielding materials
   - 3b. Structural shell and cover plates
   - 3c. Upper and lower trunnions

Table 3.3-2
Radioactive Material Confinement Barriers for NUHOMS® System

Confinement Barriers and Systems
1. Fuel Cladding
2. DSC Containment Pressure Boundary
3. Inner DSC Closure Weld
4. Outer DSC Closure Weld
5. DSC Cover Plates

Table 3.3-3
Design Parameters for Criticality Analysis of the NUHOMS®-24P DSC

Parameter	Design Value
Fuel Assemblies	
Number/Type	24/PWR
Rod Array	15x15
Number of Fuel Rods	208
Number of CR Guide Tubes	16
Number of Instrument Tubes	1
Rod Pitch (inch)	0.568
Burnup Credit	Yes
Fissile Content (% initial U equivalent)	
U-235 (Credit for Soluble Boron)	4.00
U-235 (Credit for Burnup)	1.45
U-238	Balance
Fuel Pellets	
Density (g/cm^3)	10.14
Diameter (inch)	0.369
Fuel Rod Cladding	
Material	Zircaloy-4
Thickness (inch)	0.0265
Outside Diameter (inch)	0.430
Control Rod Guide Tubes	
Material	Zircaloy-4
Thickness (inch)	0.016
Outside Diameter (inch)	0.530
Instrument Tube	
Material	Zircaloy-4
Thickness (inch)	0.026
Outside Diameter (inch)	0.493

Table 3.3-3
Design Parameters for Criticality Analysis of the NUHOMS®-24P DSC
(concluded)

Parameter	Design Value
DSC Guide Sleeves	
Material Thickness (inch)	304 Stainless Steel
12 Outer	0.0598
12 Inner	0.1046
Outside Width (inch)	
12 Outer	9.120
12 Inner	9.109
DSC Oversleeves	
Material	304 Stainless Steel
Thickness (inch)	0.125
DSC Fill Material	
Material	Unborated Water
Density (g/cm^3)	10^{-4} - 1.0
DSC Shell	
Material	304 Stainless Steel
Thickness inch)	0 625
Outside Diameter (inch)	67.25
Cask	
Material	Steel/Lead
Wall Thicknesses (inch)	0 5-3.5-1 5-3.0-0.13
Outside Diameter (inch)	85.3

Table 3.3-4

Results Summary for Reactivity Equivalence Burnup Cases

Nominal Case NUHOMS®-24P DSC Model Fully Loaded with Irradiated Fuel

Burnup Case w/o IE - GWD/MTU BU	k_{eff}	±	σ
2.00 - 10	0.88277	±	0.00315
2.00 - 15	0.83604	±	0.00330
2.00 - 20	0.79561	±	0.00254
2.00 - 25	0.76628	±	0.00257
2.91 - 20	0.89968	±	0.00328
2.91 - 25	0.85686	±	0.00271
2.91 - 30	0.82303	±	0.00272
2.91 - 35	0.78596	±	0.00256
3.20 - 25	0.88368	±	0.00354
3.20 - 30	0.84318	±	0.00301
3.20 - 35	0.80896	±	0.00322
3.20 - 40	0.77623	±	0.00255
3.41 - 30	0.86936	±	0.00305
3.41 - 35	0.82743	±	0.00298
3.41 - 40	0.79244	±	0.00241
3.41 - 45	0.75166	±	0.00265
4.00 - 30	0.91753	±	0.00326
4.00 - 35	0.88037	±	0.00321
4.00 - 40	0.84078	±	0.00293
4.00 - 45	0.80401	±	0.00304

Table 3.3-5
Summary of Selected Irradiated Fuel Equivalence Calculation Results Components
NUHOMS®-24P DSC

Equivalent BU Case (w/o IE - GWD/MTIHM)	k-nominal (1)	ks-nominal (2)	Δk Fission Products	Δk Burnup Total
2.00 - 11.36	0.86802	0.01404	-0.07640	-0.10247
2.91 - 24.04	0.86737	0.00864	-0.12054	-0.21439
3.20 - 27.06	0.86684	0.00908	-0.12813	-0.22987
3.41 - 30.02	0.86670	0.00736	-0.13670	-0.24482
4.00 - 36.85	0.86558	0.00674	-0.14337	-0.29076

(1) Equivalent burnup case K-nominal calculated by regression analysis of Table 3.3-9 K-eff results for each respective initial enrichment case.

(2) Uncertainties listed are 95/95 tolerance level including KENO and regression analysis uncertainties.

Table 3.3-6
Benchmark Critical Experiments

NO	GENERAL DESCRIPTION	ENRICH-MENT W/O/U235	REFLECTOR	SEPARATING MATERIAL [1]	CHARACTERIZING SEPARATION (CM)	K-eff
1	UO2 ROD LATTICE	2 46	WATER	—	—	1 00727 +/- 0 00474
2	UO2 ROD LATTICE	2 46	1037 PPM B-W	—	—	1 00113 +/- 0 00381
3	UO2 ROD LATTICE	2 46	764 PPM B-W	—	1 64	0 99867 +/- 0 00380
4	UO2 ROD LATTICE	2.46	WATER	84 B4C PINS	1 64	1 00251 +/- 0 00510
5	UO2 ROD LATTICE	2 46	WATER	64 B4C PINS	3 27	0 99974 +/- 0 00386
6	UO2 ROD LATTICE	2.46	WATER	64 B4C PINS	3.27	0 99101 +/- 0 00405
7	UO2 ROD LATTICE	2.46	WATER	34 B4C PINS	4 91	0 98879 +/- 0.00448
8	UO2 ROD LATTICE	2.46	WATER	34 B4C PINS	4 91	0 98978 +/- 0.00506
9	UO2 ROD LATTICE	2.46	WATER	—	6 54	0 98688 +/- 0 00459
10	UO2 ROD LATTICE	2 46	143 PPM B-W	—	4 91	0 98624 +/- 0.00492
11	UO2 ROD LATTICE	2.46	514 PPM B-W	S S	1 64	1 00622 +/- 0 00391
12	UO2 ROD LATTICE	2 46	217 PPM B-W	S S.	3 27	0 99421 +/- 0 00432
13	UO2 ROD LATTICE	2 46	15 PPM B-W	1 614% B/AL	1 64	1 00359 +/- 0 00544
14	UO2 ROD LATTICE	2.46	92 PPM B-W	1 257% B/AL	1 64	0 99604 +/- 0.00403
15	UO2 ROD LATTICE	2.46	395 PPM B-W	0 401% B/AL	1 64	0 99189 +/- 0 00374
16	UO2 ROD LATTICE	2.46	121 PPM B-W	0 401% B/AL	3 27	0 98422 +/- 0 00447
17	UO2 ROD LATTICE	2.46	487 PPM B-W	0 242% B/AL	1 64	0 99780 +/- 0 00403
18	UO2 ROD LATTICE	2 46	197 PPM B-W	0 242% B/AL	3.27	0 99760 +/- 0 00434
19	UO2 ROD LATTICE	2.46	634 PPM B-W	0 100% B/AL	1 64	0 99286 +/- 0 00396
20	UO2 ROD LATTICE	2 46	320 PPM B-W	0 100% B/AL	3 27	0 99612 +/- 0 00438
21	UO2 ROD LATTICE	2 46	72 PPM B-W	0 100% B/AL	4 91	0 99317 +/- 0.00462
22	UO2 ROD LATTICE	2 35	WATER	—	—	0 99472 +/- 0 00425
23	UO2 ROD LATTICE	2.35	WATER	—	11 92	1 00292 +/- 0 00420
24	UO2 ROD LATTICE	2.35	WATER	—	8.39	0 98799 +/- 0 00404
25	UO2 ROD LATTICE	2 35	WATER	—	6 39	0 99114 +/- 0 00403
26	UO2 ROD LATTICE	2 35	WATER	—	8 01	0 99997 +/- 0 00456
27	UO2 ROD LATTICE	2 35	WATER	—	4 46	0 99524 +/- 0 00384
28	UO2 ROD LATTICE	2 35	WATER	28 7% BORAL	6 34	0 99355 +/- 0 00393
29	UO2 ROD LATTICE	2 35	WATER	28 7% BORAL	9 03	0 99810 +/- 0 00452
30	UO2 ROD LATTICE	2 35	WATER	S S	6 88	0 99000 +/- 0 00477
31	UO2 ROD LATTICE	2 35	WATER	S S	7 64	0 99864 +/- 0 00465
32	UO2 ROD LATTICE	2 35	WATER	S S	7 51	0 99799 +/- 0 00475
33	UO2 ROD LATTICE	2 35	WATER	S S	7 42	0 98861 +/- 0 00451
34	UO2 ROD LATTICE	2 35	WATER	S S	7 76	0 99427 +/- 0 00514
35	UO2 ROD LATTICE	2 35	WATER	S.S	10 44	0 99571 +/- 0 00377
36	UO2 ROD LATTICE	2 35	WATER	S S	11 47	0 99621 +/- 0 00397
37	UO2 ROD LATTICE	2 35	WATER	1 05% S S	7 56	0 99051 +/- 0 00460
38	UO2 ROD LATTICE	2.35	WATER	1 05% S S	9 82	0 99881 +/- 0 00500
39	UO2 ROD LATTICE	2.35	WATER	1 62% S S	7 36	0 99196 +/- 0 00412
40	UO2 ROD LATTICE	2.35	WATER	1 62% S S	9 52	0 99258 +/- 0 00481

NOTES: [1] PERCENTAGES (%) REFER TO WEIGHT PERCENT BORON CONTENT.
K_{eff}(ALL) 0.99512 ± 0.00545

Table 3.3-7
CSAS2 PuO2 - UO2 Critical Experiment Benchmark Calculations[1]

Lattice I.D.	Lattice Pitch (cm)	H/Pu Ratio	k_{eff} ± 1 s
30	1.778	184.2	1.00742 ± 0.00391
31	1.778	184.2	1.01964 ± 0.00434
32	2.209	389.2	1.00497 ± 0.00390
33	2.209	389.2	1.01036 ± 0.00333
34	2.514	561.1	1.00920 ± 0.00431
35	2.514	561.1	1.01224 ± 0.00409

(1) PuO2 - UO2 benchmark experiments are described in Reference 3.42.

Table 3.3-8
CSAS2/SAS2/CSMO-2E Irradiated FA Reactivity Calculations Method Validation by Comparison to CASMO-2 k_{inf} Results

Job Name	Case No.	Initial Enrichment (% U235)	Burnup (GW/MTU)	Mod. Temp. (°K)	CASMO-2E k_{inf}	CSAS2 k_{inf}	CSAS Bias[1] (Δk/k)
CAS2EY3	113	2.91	0	293	1.37215	1.39212	0.01455 +/- 0.00292
CAS2EY3	114	2.91	0	422	1.36068	1.38186	0.01557 +/- 0.00304
CAS2EY3	122	2.91	20	422	1.13572	1.16556	0.02627 +/- 0.00251
CAS2EY3	123	2.91	30	422	1.04895	1.07833	0.02801 +/- 0.00258
CAS2EEC	114	3.20	0	422	1.38361	1.40239	0.01357 +/- 0.00274
CAS2EEC	123	3.20	30	422	1.07527	1.10647	0.02902 +/- 0.00281
CAS2EEC	124	3.20	40	422	0.99756	1.02617	0.02868 +/- 0.00193
CAS2E5L	114	3.41	0	422	1.39818	1.41200	0.00988 +/- 0.00303
CAS2E5L	123	3.41	30	422	1.09350	1.12349	0.02743 +/- 0.00257
CAS2E5L	124	3.41	40	422	1.01482	1.04365	0.02841 +/- 0.00222

(1) Calculated (CSAS2 k_{inf} - CASMO2 k_{inf}) / (CASMO2 k_{inf}).

Table 3.3-9

Axial Burnup Variation Sensitivity Results Summary -NUHOMS®-24P DSC

Fully Loaded with 4 w/o Irradiated Fuel Flooded with Pure Water

Sensitivity Case (End BU/Mid BU)[1]	Bias (Sens Case - Nominal)		CSAS2 Sigma
4.5" End Segment Case			
10 / 40	-0.00153	±	0.00291
10 / 45	-0.03590	±	0.00293
Calculated 10 / 42.0 Bias[2]	-0.01528	±	0.00293
9.0" End Segment Case			
15 / 40	0.02411	±	0.00291
15 / 45	0.00985	±	0.00284
Calculated 15 / 43.6 Bias[2]	0.01384	±	0.00284
13.5" End Segment Case			
20 / 40	0.03807	±	0.00286
20 / 45	0.02869	±	0.00281
Calculated 20 / 44.6 Bias[2]	0.02944	±	0.00286
20 / 40	0.00970	±	0.00270
20 / 45	0.00147	±	0.00330
Calculated 20 / 44.6 Case w/os[3]	0.00213	±	0.00330
18.0" End Segment Case			
25 / 45	0.02949	±	0.00250
Calculated 25 / 45.0 Bias[2]	0.02949	±	0.00250
Calculated 25 / 45.0 Case w/os[3]	0.00325	±	0.00250
24.0" End Segment Case			
30 / 45	0.02949	±	0.00271
Calculated 30 / 45.0 Bias[2]	0.02949	±	0.00271

(1) The skewed axial BU profile is modeled in the CASA2 runs with two axial zones in each case. The DSC fuel array is modeled with water reflection in the +Z direction and is specularly reflected at the midplane. Therefore, the axial BU profiles are modeled symmetrical along the Z axis.

(2) Bias for each case calculated for a worst-case skewed axial burnup profile for each respective end segment geometry case which results in an assembly average of 40 GWD/MTIHM.

(3) These cases demonstrate equivalence of a uniform axial BU profile and a worst case skewed axial BU profile in a DSC design which includes SS oversleeves; residual bias = 0.00325 ± 0.00330 at 40 GWD/MTU burnup.

Table 3.3-10
Moderator Density Sensitivity Results Summary for 1.45 w/o Non-Irradiated Fuel NUHOMS®-24P DSC

Moderator Density (g/cc)	Nominal k_{eff}		CSAS2 Sigma
1.0000	0.87177	±	0.00348
0.9982	0.87170	±	0.00244
0.9579	0.87680	±	0.00353
0.9000	0.88151	±	0.00341
0.8000	0.88778	±	0.00329
0.7000	0.89083	±	0.00310
0.6500	0.88932	±	0.00311
0.6000	0.88581	±	0.00313
0.5500	0.89222	±	0.00330
0.5000	0.88453	±	0.00289
0.4500	0.88312	±	0.00363
0.4000	0.87051	±	0.00356
0.3000	0.83801	±	0.00276
0.2000	0.76849	±	0.00327
0.1000	0.60276	±	0.00311
0.0010	0.32337	±	0.00211
0.0001	0.30212	±	0.00207
Moderator Density Bias	0.02052	±	0.00330

(1) Nominal base case.

Table 3.3-11
DSC Criticality Analysis Summary of Final k_{eff} Result Components
for Selected Points on Reactivity Equivalence Curve NUHOMS®-24P DSC

	Initial Enrichment Point					
Component	1.45	2.00	2.91	3.20	3.41	4.00
k-nominal	0.87170	0.86802	0.86737	0.86684	0.86670	0.86558
B-method	0.00488	0.00488	0.00488	0.00488	0.00488	0.00488
B-axial	0.00000	0.00092	0.00195	0.00220	0.00246	0.00299
B-mod	0.02052	0.02052	0.02052	0.02502	0.02502	0.02502
B-ref	0.00802	0.00802	0.00802	0.00802	0.00802	0.00802
ks-nominal	0.00488	0.01404	0.00864	0.0908	0.00736	0.00674
ks-method	0.01161	0.01161	0.01161	0.01161	0.01161	0.01161
ks-axial	0.00000	0.00660	0.00660	0.00660	0.00660	0.00660
ks-mechanical	0.03994	0.03994	0.03994	0.03994	0.03994	0.03994
ks-reflector	0.00508	0.00508	0.00508	0.00508	0.00508	0.00508
ks-burnup	0.00000	0.00512	0.01072	0.01149	0.01224	0.1454
ks-mod	0.00660	0.00660	0.00660	0.00660	0.00660	0.00660
k_{eff}	0.94782	0.94782	0.94782	0.94782	0.94782	0.94781

(1) Irradiated fuel uncertainties include 95/95 uncertainty associated regression analysis

Table 3.3-12
NUHOMS® 52B Baseline Case Fuel Design Parameters

Fuel Pellet O.D	0.487 in
Fuel Clad I.D	0.489 in
Fuel Clad O.D.	0.563 in
Fuel Rod Pitch	0.738 in
Active Fuel Height	146 in
Flow Channel Outside Dimension	5.454 in
Flow Channel Thickness	0.08 in
Lattice Enrichment, %U235	4.00%
Rod Array (n x n rods)	7
Rod Locations	49
Fueled Rod Locations	49
Fuel Description	GE 7x7 GE-2, V2

Table 3.3-13
NUHOMS® 52B DSC Nominal Basket Parameters

Neutron Absorber Sheet Boron Content	0.75 w% B
Neutron Absorber Sheet Thickness	0.1345"
Neutron Absorber Sheet Width	6.3"
Moderator Density	0.998 g/cc
Fuel Assembly Position	See Figure 3.3-10

Table 3.3-14
Transfer Cask Parameters

	Thickness inches	Radius inches
DSC Inner Radius	→	33
DSC Outer Radius	0.625	33.625
Cask Inside Radius	→	34
Cask Inner Shell O.R.	0.5	34.5
Cask Gamma Shield O.R.	3.5	38
Cask Struct. Shell O.R	1.5	39.5
Cask Neutron Shield O.R.	3	42.5
Cask N.S. Panel O.R.	0.125	42.625

Table 3.3-15
NUHOMS® 52B Analysis KENO Regional Atom Densities

Fuel Pellet

Element	H-R ID No	atom/b-cm
OXYGEN	8100	4.655E-02
U235	Varies	9.310E-04
U238	Varies	2.234E-02

Moderator

Element	H-R ID No	atom/b-cm
HYDROGEN	1101	6.6736E-02
OXYGEN	8100	3.3368E-02

Zircaloy-4

Element	H-R ID No	atom/b-cm
CHROMIUM	24100	7.5166E-05
IRON	26100	9.4476E-05
NICKEL	28100	3.6613E-05
ZIRCONIUM	40100	4.2721E-02

Absorber

Element	H-R ID No	atom/b-cm
BORON	5100	3.2795E-03
CHROMIUM	24100	1.7274E-02
MANGANESE	25100	1.7210E-03
IRON	26100	5.4809e-02
NICKEL	28100	1.0870E-02

Table 3.3-15
NUHOMS® 52B Analysis KENO Regional Atom Densities
(concluded)

Carbon Steel

Element	H-R ID No	atom/b-cm
MANGANESE	25100	8.6048E-04
IRON	26100	8.3801E-02

Stainless Steel

Element	H-R ID No	atom/b-cm
CHROMIUM	24100	1.7274E-02
MANGANESE	25100	8.6048E-04
IRON	26100	5.9253E-02
NICKEL	28100	8.0520E-03

Lead

Element	H-R ID No	atom/b-cm
LEAD	82100	3.2960E-02

Cask Neutron Shield

Element	H-R ID No	atom/b-cm
HYDROGEN	1101	5.0996E-02
CARBON	6100	8.2505E-03
OXYGEN	8100	3.7793E-02
ALUMINUM	13100	7.0275E-03
SILICON	14100	1.2680E-03
CALCIUM	20100	1.4835E-03
IRON	26100	1.0628E-04

Table 3.3-16
Summary of PNL Critical Benchmark Calculations

VECTRA Ref. #	Enrich-ment (w%)	Rod Pitch (mm)	Absorber Material	Absorber Thickness (mm)	Abs. to Cluster Distance (mm)	Reflector Material	Refl. to Cluster Distance (mm)	Critical Cluster Sep. (mm)	$K_{eff} \pm 1\sigma$
1	4.31%	25.40	N/A	N/A	N/A	Moderator	N/A	117.2	1.00462 ± 0.00269
2	4.31%	25.40	N/A	N/A	N/A	Moderator	N/A	116.8	1.01742 ± 0.00269
3	4.31%	25.40	SS304L	4.85	2.45	Moderator	N/A	85.8	1.00582 ± 0.00262
4	4.31%	25.40	SS304L	4.85	32.77	Moderator	N/A	96.5	1.00710 ± 0.00275
5	4.31%	25.40	SS304L	3.02	4.28	Moderator	N/A	92.2	1.01261 ± 0.00286
6	4.31%	25.40	SS304L	3.02	32.77	Moderator	N/A	97.6	1.01379 ± 0.00235
7	4.31%	25.40	SS304L1.1%	2.98	4.32	Moderator	N/A	61.0	1.01631 ± 0.00259
8	4.31%	25.40	SS304L1.1%	2.98	32.77	Moderator	N/A	80.8	1.00913 ± 0.00286
9	4.31%	25.40	SS304L1.6%	2.98	4.32	Moderator	N/A	57.6	1.01346 ± 0.00284
10	4.31%	25.40	SS304L1.6%	2.98	32.77	Moderator	N/A	79.0	1.00796 ± 0.00288
11	4.31%	25.40	BoralA	7.13	32.77	Moderator	N/A	67.2	1.00822 ± 0.00278
12	4.31%	25.40	Copper	6.46	0.84	Moderator	N/A	81.5	1.00959 ± 0.00273
13	4.31%	25.40	Copper	6.46	32.77	Moderator	N/A	94.2	1.00687 ± 0.00282
14	4.31%	25.40	Copper	3.37	0.00	Moderator	N/A	84.8	1.00574 ± 0.00255
15	4.31%	25.40	Copper	3.37	42.41	Moderator	N/A	96.4	1.00715 ± 0.00252
16	4.31%	25.40	Cu/Cd	3.57	0.00	Moderator	N/A	66.6	1.01169 ± 0.00283
17	4.31%	25.40	Cu/Cd	3.57	42.41	Moderator	N/A	83.5	1.01121 ± 0.0028
18	4.31%	25.40	Cadmium	0.291	7.01	Moderator	N/A	59.3	1.01198 ± 0.00258
19	4.31%	25.40	Cadmium	0.291	32.77	Moderator	N/A	74.2	1.00945 ± 0.00284
20	4.31%	25.40	Cadmium	0.610	6.69	Moderator	N/A	59.6	1.01339 ± 0.0028
21	4.31%	25.40	Cadmium	0.610	32.77	Moderator	N/A	74.2	1.01292 ± 0.00269
22	4.31%	25.40	Cadmium	0.901	6.40	Moderator	N/A	58.7	1.01386 ± 0.00277
23	4.31%	25.40	Cadmium	0.901	32.77	Moderator	N/A	73.8	1.01380 ± 0.00271
24	4.31%	25.40	Cadmium	2.006	5.29	Moderator	N/A	56.8	1.01429 ± 0.00248
25	4.31%	25.40	Cadmium	2.006	32.77	Moderator	N/A	72.8	1.00814 ± 0.00264
26	4.31%	25.40	Aluminum	6.25	1.05	Moderator	N/A	107.2	1.00970 ± 0.00279
27	4.31%	25.40	Aluminum	6.25	32.77	Moderator	N/A	107.7	1.01194 ± 0.00278
28	4.31%	25.40	Zircaloy-4	6.52	0.78	Moderator	N/A	109.2	1.01439 ± 0.00263
29	4.31%	25.40	Zircaloy-4	6.52	32.77	Moderator	N/A	108.6	1.00760 ± 0.00269
30	2.35%	20.32	N/A	N/A	N/A	Steel	0	98.9	1.01780 ± 0.00279
31	2.35%	20.32	N/A	N/A	N/A	Steel	6.6	104.4	1.00790 ± 0.00263

Table 3.3-16
Summary of PNL Critical Benchmark Calculations

(continued)

VECTRA Ref. #	Enrich-ment (w%)	Rod Pitch (mm)	Absorber Material	Absorber Thickness (mm)	Abs. to Cluster Distance (mm)	Reflector Material	Refl. to Cluster Distance (mm)	Critical Cluster Sep. (mm)	$K_{eff} \pm 1\sigma$
32	2.35%	20.32	N/A	N/A	N/A	Steel	13.21	104.4	1.01002 ± 0.00263
33	2.35%	20.32	N/A	N/A	N/A	Steel	26.16	96.0	1.00366 ± 0.00281
34	2.35%	20.32	N/A	N/A	N/A	Steel	39.12	87.5	1.00960 ± 0.00269
35	2.35%	20.32	N/A	N/A	N/A	Moderator	N/A	74.7	1.01039 ± 0.00264
36	2.35%	16.84	N/A	N/A	N/A	Steel	0	85.7	1.01221 ± 0.00285
37	2.35%	16.84	N/A	N/A	N/A	Steel	6.6	91.7	1.00653 ± 0.00263
38	2.35%	16.84	N/A	N/A	N/A	Steel	13.21	91.0	1.00398 ± 0.00304
39	2.35%	16.84	N/A	N/A	N/A	Steel	16.84	92.5	1.00716 ± 0.00285
40	2.35%	16.84	N/A	N/A	N/A	Steel	23.44	88.7	1.00694 ± 0.00262
41	2.35%	16.84	N/A	N/A	N/A	Steel	30.05	86.5	0.99909 ± 0.00255
42	2.35%	16.84	N/A	N/A	N/A	Steel	39.12	81.3	1.00414 ± 0.0025
43	2.35%	16.84	N/A	N/A	N/A	Steel	67.26	72.6	1.00344 ± 0.00245
44	2.35%	16.84	N/A	N/A	N/A	Moderator	N/A	68.3	1.00699 ± 0.00242
45	4.31%	25.40	N/A	N/A	N/A	Steel	0	117.6	1.01096 ± 0.00309
46	4.31%	25.40	N/A	N/A	N/A	Steel	6.6	131.2	1.00367 ± 0.00326
47	4.31%	25.40	N/A	N/A	N/A	Steel	13.21	129.9	1.01098 ± 0.00268
48	4.31%	25.40	N/A	N/A	N/A	Steel	26.16	113.1	1.00763 ± 0.00316
49	4.31%	25.40	N/A	N/A	N/A	Steel	54.05	86.7	1.00920 ± 0.00309
50	4.31%	25.40	N/A	N/A	N/A	Moderator	N/A	71.0	1.01488 ± 0.00262
51	4.31%	18.92	N/A	N/A	N/A	Steel	0	143.9	1.00208 ± 0.003
52	4.31%	18.92	N/A	N/A	N/A	Steel	6.6	152.6	1.00385 ± 0.00301
53	4.31%	18.92	N/A	N/A	N/A	Steel	13.21	153.9	1.00582 ± 0.00322
54	4.31%	18.92	N/A	N/A	N/A	Steel	19.56	153.6	1.00894 ± 0.00323
55	4.31%	18.92	N/A	N/A	N/A	Steel	26.16	149.7	1.00040 ± 0.00298
56	4.31%	18.92	N/A	N/A	N/A	Steel	54.05	133.4	1.00556 ± 0.00323
57	4.31%	18.92	N/A	N/A	N/A	Moderator	N/A	124.8	1.01910 ± 0.00261
58	4.31%	18.92	N/A	N/A	N/A	Moderator	N/A	125.0	1.01506 ± 0.00275
59	2.35%	16.84	N/A	N/A	N/A	Steel	13.21	91.0	1.02322 ± 0.00258
60	2.35%	16.84	SS304L	3.02	N/A	Steel	13.21	78.7	1.00976 ± 0.0026
61	2.35%	16.84	SS304L1.1 %	2.98	N/A	Steel	13.21	43.9	1.01084 ± 0.00267
62	2.35%	16.84	BoralB	2.92	N/A	Steel	13.21	22.8	1.00711 ± 0.0031
63	2.35%	16.84	Boroflex	2.26	N/A	Steel	13.21	25.7	1.01203 ± 0.00304

Table 3.3-16
Summary of PNL Critical Benchmark Calculations

(continued)

VECTRA Ref. #	Enrich-ment (w%)	Rod Pitch (mm)	Absorber Material	Absorber Thickness (mm)	Abs. to Cluster Distance (mm)	Reflector Material	Refl. to Cluster Distance (mm)	Critical Cluster Sep. (mm)	$K_{eff} \pm 1\sigma$
64	2.35%	16.84	Cadmium	0.61	N/A	Steel	13.21	34.5	1.00903 ± 0.00259
65	2.35%	16.84	Copper	3.37	N/A	Steel	13.21	73.8	1.00367 ± 0.00267
66	2.35%	16.84	Cu/Cd	3.57	N/A	Steel	13.21	50.2	1.00470 ± 0.00273
67	4.31%	18.92	N/A	N/A	N/A	Steel	19.56	153.6	0.99884 ± 0.0029
68	4.31%	18.92	SS304L	3.02	N/A	Steel	19.56	132.7	1.00254 ± 0.00298
69	4.31%	18.92	SS304L1.1%	2.98	N/A	Steel	19.56	93.5	1.00232 ± 0.00299
70	4.31%	18.92	BoralB	2.92	N/A	Steel	19.56	78.2	1.00499 ± 0.00302
71	4.31%	18.92	Boroflex	2.26	N/A	Steel	19.56	78.9	0.99841 ± 0.00289
72	4.31%	18.92	Cadmium	0.61	N/A	Steel	19.56	84.6	1.00984 ± 0.00304
73	4.31%	18.92	Copper	3.37	N/A	Steel	19.56	129.9	1.00542 ± 0.00296
74	4.31%	18.92	Cu/Cd	3.57	N/A	Steel	19.56	100.9	1.00094 ± 0.00302
75	2.35%	16.84	N/A	N/A	N/A	Uranium	0	76.5	0.98897 ± 0.00269
76	2.35%	16.84	N/A	N/A	N/A	Uranium	13.21	90.9	0.98111 ± 0.00225
77	2.35%	16.84	N/A	N/A	N/A	Uranium	26.16	94.2	0.98716 ± 0.00263
78	2.35%	16.84	N/A	N/A	N/A	Uranium	39.12	87.8	1.00210 ± 0.00262
79	2.35%	16.84	N/A	N/A	N/A	Lead	0	96.5	1.00826 ± 0.00254
80	2.35%	16.84	N/A	N/A	N/A	Lead	6.6	97.0	1.01217 ± 0.00276
81	2.35%	16.84	N/A	N/A	N/A	Lead	32.75	80.9	1.00471 ± 0.00261
82	2.35%	16.84	N/A	N/A	N/A	Moderator	N/A	61.8	1.00797 ± 0.00259
83	2.35%	16.84	N/A	N/A	N/A	Moderator	N/A	68.1	1.00909 ± 0.00266
84	4.31%	18.92	N/A	N/A	N/A	Uranium	0	148.5	0.97412 ± 0.00294
85	4.31%	18.92	N/A	N/A	N/A	Uranium	6.6	162.3	0.98458 ± 0.00283
86	4.31%	18.92	N/A	N/A	N/A	Uranium	13.21	177.9	0.98622 ± 0.00333
87	4.31%	18.92	N/A	N/A	N/A	Uranium	19.56	187.6	0.99678 ± 0.00262
88	4.31%	18.92	N/A	N/A	N/A	Uranium	26.16	188.9	0.99595 ± 0.00294
89	4.31%	18.92	N/A	N/A	N/A	Uranium	32.75	183.0	0.99409 ± 0.00284
90	4.31%	18.92	N/A	N/A	N/A	Uranium	54.05	159.2	0.99861 ± 0.00275
91	4.31%	18.92	N/A	N/A	N/A	Moderator	N/A	118.8	1.01400 ± 0.00252
92	4.31%	18.92	N/A	N/A	N/A	Lead	0	172.6	1.00956 ± 0.00291
93	4.31%	18.92	N/A	N/A	N/A	Lead	6.6	177.0	1.01158 ± 0.00259
94	4.31%	18.92	N/A	N/A	N/A	Lead	19.56	169.5	1.00399 ± 0.00286
95	4.31%	18.92	N/A	N/A	N/A	Lead	50.01	138.7	1.00093 ± 0.00286

Table 3.3-16
Summary of PNL Critical Benchmark Calculations

(continued)

VECTRA Ref. #	Enrich-ment (w%)	Rod Pitch (mm)	Absorber Material	Absorber Thickness (mm)	Abs. to Cluster Distance (mm)	Reflector Material	Refl. to Cluster Distance (mm)	Critical Cluster Sep. (mm)	$K_{eff} \pm 1\sigma$
96	2.35%	20.32	N/A	N/A	N/A	Moderator	N/A	119.2	1.01148 ± 0.00268
97	2.35%	20.32	N/A	N/A	N/A	Moderator	N/A	84.1	1.00789 ± 0.00238
98	2.35%	20.32	N/A	N/A	N/A	Moderator	N/A	84.2	1.00908 ± 0.00238
99	2.35%	20.32	N/A	N/A	N/A	Moderator	N/A	100.5	1.01146 ± 0.00265
100	2.35%	20.32	N/A	N/A	N/A	Moderator	N/A	63.9	1.01521 ± 0.0025
101	2.35%	20.32	N/A	N/A	N/A	Moderator	N/A	80.1	0.99060 ± 0.00262
102	2.35%	20.32	N/A	N/A	N/A	Moderator	N/A	44.6	1.00657 ± 0.00229
103	2.35%	20.32	SS304L	4.85	6.45	Moderator	N/A	68.8	1.00958 ± 0.00239
104	2.35%	20.32	SS304L	4.85	27.32	Moderator	N/A	76.4	1.01405 ± 0.00266
105	2.35%	20.32	SS304L	4.85	40.42	Moderator	N/A	75.1	1.00381 ± 0.00271
106	2.35%	20.32	SS304L	3.02	6.45	Moderator	N/A	74.2	1.00641 ± 0.00251
107	2.35%	20.32	SS304L	3.02	40.42	Moderator	N/A	77.6	1.01278 ± 0.00253
108	2.35%	20.32	SS304L	3.02	6.45	Moderator	N/A	104.4	1.00873 ± 0.00242
109	2.35%	20.32	SS304L	3.02	40.42	Moderator	N/A	114.7	1.00964 ± 0.00238
110	2.35%	20.32	SS304L1.1%	2.98	6.45	Moderator	N/A	75.6	1.00658 ± 0.00244
111	2.35%	20.32	SS304L1.1%	2.98	40.42	Moderator	N/A	96.2	1.01159 ± 0.00259
112	2.35%	20.32	SS304L1.6%	2.98	6.45	Moderator	N/A	73.6	1.00728 ± 0.0026
113	2.35%	20.32	SS304L1.6%	2.98	40.42	Moderator	N/A	95.2	1.00881 ± 0.00247
114	2.35%	20.32	BoralA	7.13	6.45	Moderator	N/A	63.3	1.00871 ± 0.00245
115	2.35%	20.32	BoralA	7.13	44.42	Moderator	N/A	90.3	1.01064 ± 0.00237
116	2.35%	20.32	BoralA	7.13	6.45	Moderator	N/A	50.5	1.00950 ± 0.00246
117	2.35%	20.32	Copper	6.46	6.45	Moderator	N/A	66.2	1.01099 ± 0.0025
118	2.35%	20.32	Copper	6.46	27.32	Moderator	N/A	77.2	1.00594 ± 0.0026
119	2.35%	20.32	Copper	6.46	44.42	Moderator	N/A	75.1	1.00779 ± 0.00246
120	2.35%	20.32	Copper	3.37	6.45	Moderator	N/A	68.8	1.00577 ± 0.00228
121	2.35%	20.32	Copper	3.37	40.42	Moderator	N/A	70.0	1.00410 ± 0.00227
122	2.35%	20.32	Cu/Cd	3.57	6.45	Moderator	N/A	51.5	1.00808 ± 0.00244
123	2.35%	20.32	Cadmium	0.61	6.45	Moderator	N/A	67.4	1.00808 ± 0.00244
124	2.35%	20.32	Cadmium	0.61	14.82	Moderator	N/A	76.0	1.00606 ± 0.00253
125	2.35%	20.32	Cadmium	0.61	40.42	Moderator	N/A	93.7	1.00616 ± 0.00249
126	2.35%	20.32	Cadmium	0.291	14.82	Moderator	N/A	77.8	1.01101 ± 0.0023
127	2.35%	20.32	Cadmium	0.291	40.42	Moderator	N/A	94.0	1.01378 ± 0.00281

Table 3.3-16
Summary of PNL Critical Benchmark Calculations

(concluded)

VECTRA Ref. #	Enrich-ment (w%)	Rod Pitch (mm)	Absorber Material	Absorber Thickness (mm)	Abs. to Cluster Distance (mm)	Reflector Material	Refl. to Cluster Distance (mm)	Critical Cluster Sep. (mm)	$K_{eff} \pm 1\sigma$
128	2.35%	20.32	Cadmium	0.901	14.82	Moderator	N/A	75.4	1.00665 ± 0.00241
129	2.35%	20.32	Cadmium	0.901	40.42	Moderator	N/A	93.9	1.01462 ± 0.00257
130	2.35%	20.32	Aluminum	6.25	6.45	Moderator	N/A	86.7	1.01100 ± 0.00245
131	2.35%	20.32	Aluminum	6.25	40.42	Moderator	N/A	87.8	1.00750 ± 0.00255
132	2.35%	20.32	Aluminum	6.25	44.42	Moderator	N/A	88.3	1.00336 ± 0.00252
133	2.35%	20.32	Zircaloy-4	6.52	6.45	Moderator	N/A	87.9	1.01140 ± 0.00241
134	2.35%	20.32	Zircaloy-4	6.52	40.42	Moderator	N/A	87.8	1.00958 ± 0.00244

Notes: Statistical analysis of these results shows KENO5A/HR-16/PN-HET methodology has no significant bias for fuel enrichment, assembly pitch, rod pitch, reflector distance, absorber material, absorber thickness, and absorber concentration. A bias was noted for reflector material. Cases 75-78 and 84-90 (closely DU-reflected) were discarded for statistical purposes. The bias indicated by the remaining population of 123 criticals is -0.00859±0.00458 (σ). This bias is not applicable to closely DU-reflected systems.

Table 3.3-17
Qualified BWR Fuel Designs

Fuel Design
GE 7x7 GE-2, V1a[1]
GE 7x7 GE-2, V1b
GE 7x7 GE-2, V2
GE 7x7 GE-3, V1
GE 7x7 GE-3, V2a
GE 7x7 GE-3, V2b
GE 8x8 GE-4, V1
GE 8x8 GE-4, V2a
GE 8x8 GE-4, V2b
GE 8x8 GE-5, V1
GE 8x8 GE-5, V2
GE 8x8 Pres., V1
GE 8x8 Pres., V2
GE 8x8 Barrier, V1
GE 8x8 Barrier, V2
GE 8x8 GE-8, V1a
GE 8x8 GE-8, V1b
GE 8x8 GE-8, V2a
GE 8x8 GE-8, V2b
GE Dresden Unit 1

[1] Fuel designations are consistent with (3.61).

Table 3.3-18
NUHOMS®-52B KENO Analysis Fuel Assembly Position Results

Distance Inward (in)	keff	1 sigma
0.28	0.90335	0.00297
0.14	0.88907	0.00293
0.00	0.87894	0.00318
-0.14	0.88120	0.00322
-0.28	0.87561	0.00297

Table 3.3-19
NUHOMS®-52B KENO Analysis Neutron Absorber Boron Content Results

Absorber Boron Loading (w% B)	keff	1 sigma
0.00	1.04033	0.00471
0.50	0.90352	0.00531
0.75	0.87894	0.00318
1.00	0.87211	0.00546
1.25	0.86038	0.00509
1.50	0.85657	0.00506
2.00	0.83100	0.00535

Table 3.3-20
NUHOMS®-52B KENO Analysis Neutron Absorber Sheet Thickness Results

Absorber Thickness (in)	keff	1 sigma
0.100	0.90762	0.00444
0.110	0.89825	0.00381
0.120	0.88812	0.00441
0.130	0.88728	0.00448
0.135	0.87894	0.00318
0.140	0.88802	0.00447
0.150	0.86959	0.00424

Table 3.3-21
NUHOMS®-52B KENO Analysis Neutron Absorber Sheet Width Results

Absorber Width (in)	keff	1 sigma
5.50	0.89020	0.00343
6.00	0.88929	0.00311
6.20	0.88715	0.00282
6.30	0.87894	0.00318
6.40	0.88173	0.00306
6.50	0.88110	0.00297
7.00	0.87558	0.00326

Table 3.3-22
NUHOMS®-52B KENO Analysis Moderator Density Results

Moderator Density (g/cc)	keff	1 sigma
0.005	0.37492	0.00161
0.010	0.37472	0.00158
0.100	0.71468	0.00266
0.200	0.80383	0.00412
0.300	0.83650	0.00396
0.400	0.86271	0.00443
0.500	0.87469	0.00391
0.600	0.87497	0.00412
0.700	0.87249	0.00442
0.800	0.88022	0.00412
0.900	0.87848	0 00429
0.998	0.87894	0 00318
1.000	0.88622	0 00495

Table 3.3-23
NUHOMS®-52B KENO Analysis Loss of Absorber Sheet Results

Number of Sheets Lost	keff	1 sigma
0	0.87894	0.00318
1	0.88907	0.00307
4	0.92855	0.00294

Table 3.3-24
NUHOMS® 52B KENO Analysis Summary of Biases and Uncertainties

Calculation Summary for NUHOMS®-52B Maximum k_{eff}		
Reference Case	$k_{eff} \pm 1\sigma$	$k_{eff} \pm 2\sigma$
GE-2 7x7 BWR Fuel Baseline Reference Case	0.87894 ± 0.00318	0.87894 ± 0.00636 (k_{NOM}) (U_{NOM})
Biases		95/95 Uncertainty $\Delta k \pm 2\sigma$
KENO5/HR-16/PN-HET Calculational Bias		-0.00859 ± 0.00916 (B_{KENO}) (U_{KENO})
Fuel Design Bias		0.00177 (B_F)
Uncorrelated Mechanical Uncertainties	Calculated Uncertainty $\Delta k \pm 1\sigma$	95/95 Uncertainty $\Delta k + 2\sigma$
Fuel Assembly Position	0.02382 ± 0.00495 (k_{POS}) (U_{POS})	0.03372
Storage Cell Location	0.00833 ± 0.00311 (k_{LOC}) (U_{LOC})	0.01455
Neutron Absorber Sheet Boron Content	0.00000 ± 0.00000 (k_B) (U_B)	0.00000
Neutron Absorber Sheet Thickness	0.00714 ± 0.00639 (k_{THK}) (U_{THK})	0.01992
Neutron Absorber Sheet Width	0.00000 ± 0.00000 (k_{WID}) (U_{WID})	0.0000
Moderator Density	0.00728 ± 0.00495 (k_{MOD}) (U_{MOD})	0.01718
Total Mechanical Uncertainty (2σ)→ (Combined by adding in quadrature)		0.04517 U_{MECH}
k_s →		0.919

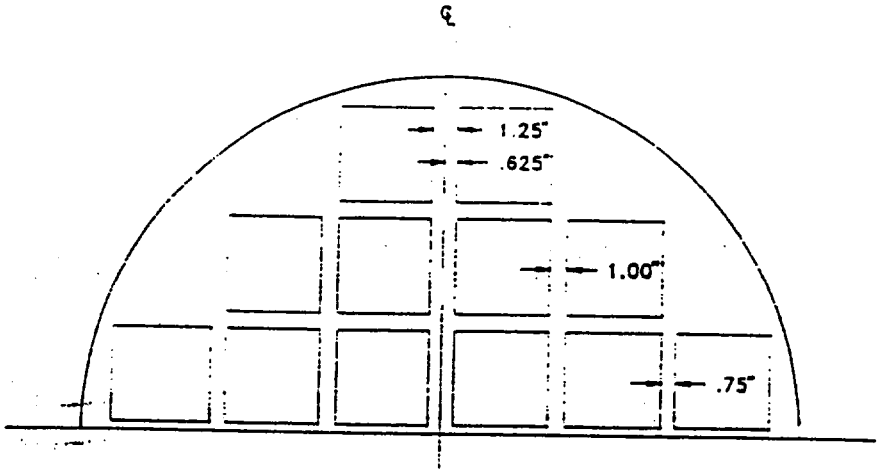

TOP VIEW OF ·ALF DSC WITH 24 FUEL GUIDE SLEEVES

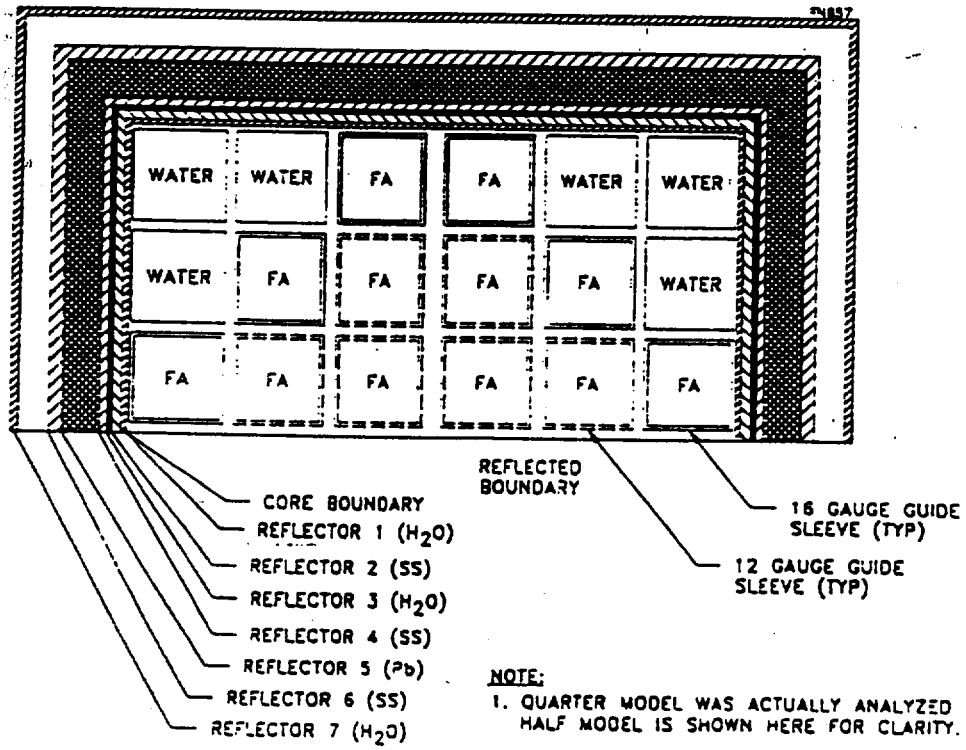

KENO MODEL OF HALF DSC AND TRANSFER CASK

Figure 3.3-1
NUHOMS®-24P DSC and KENO Model Geometry

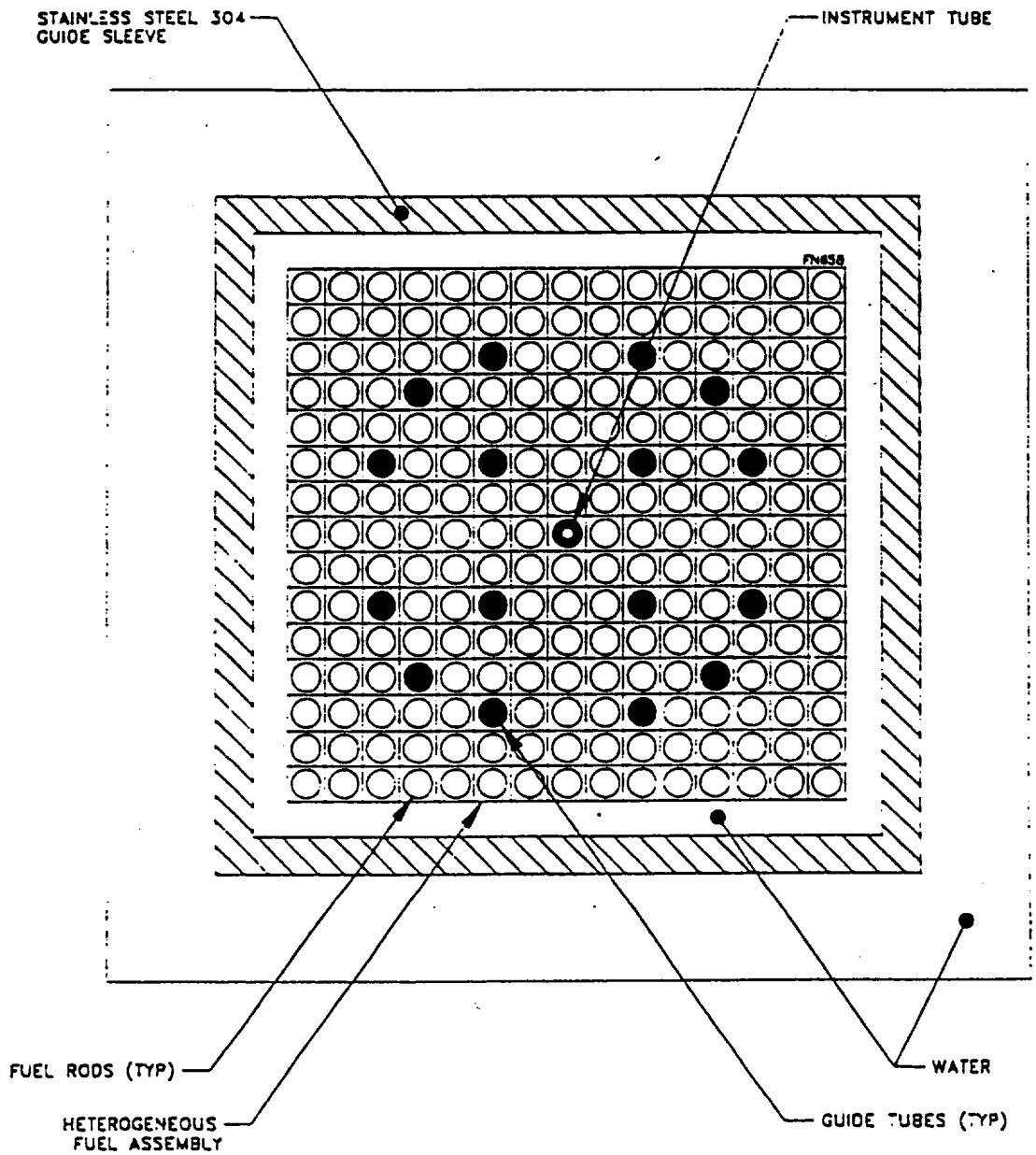

Figure 3.3-2
KENO Model for NUHOMS®-24P Fuel

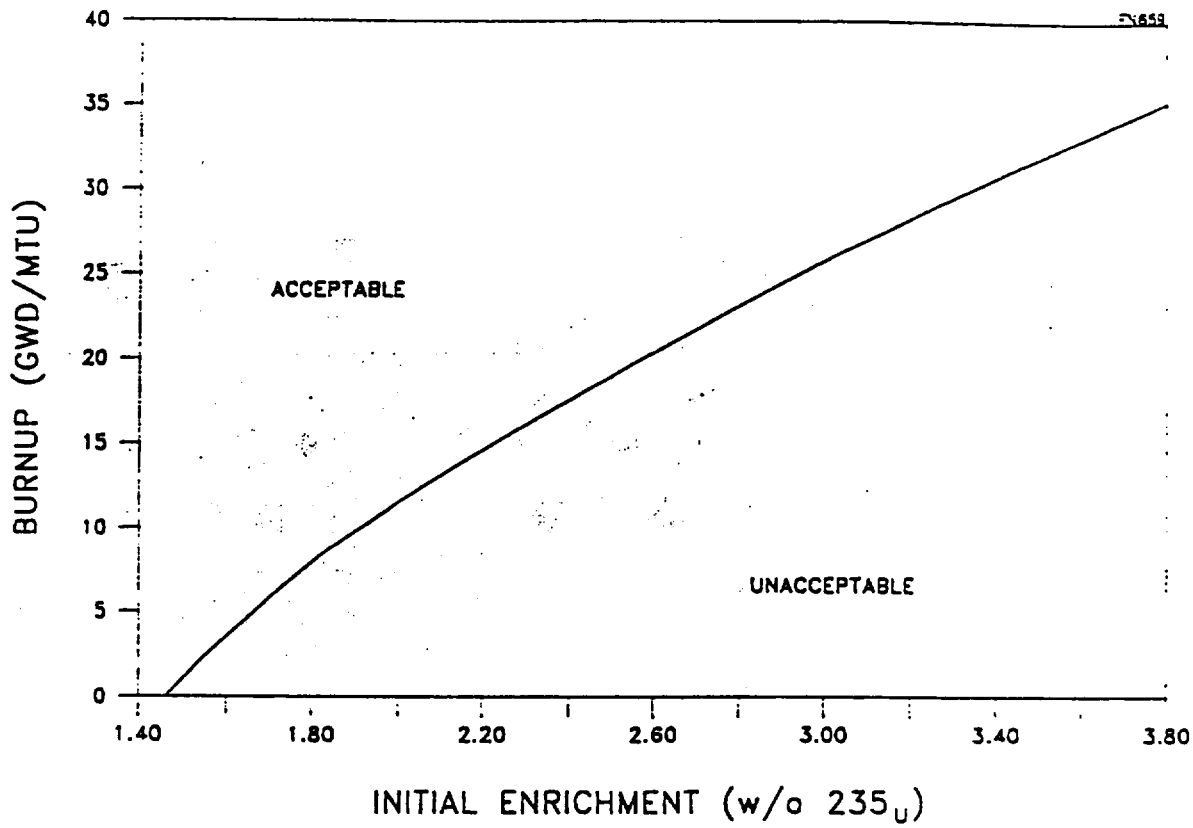

Figure 3.3-3
NUHOMS®-24P DSC Burnup Equivalence Curve

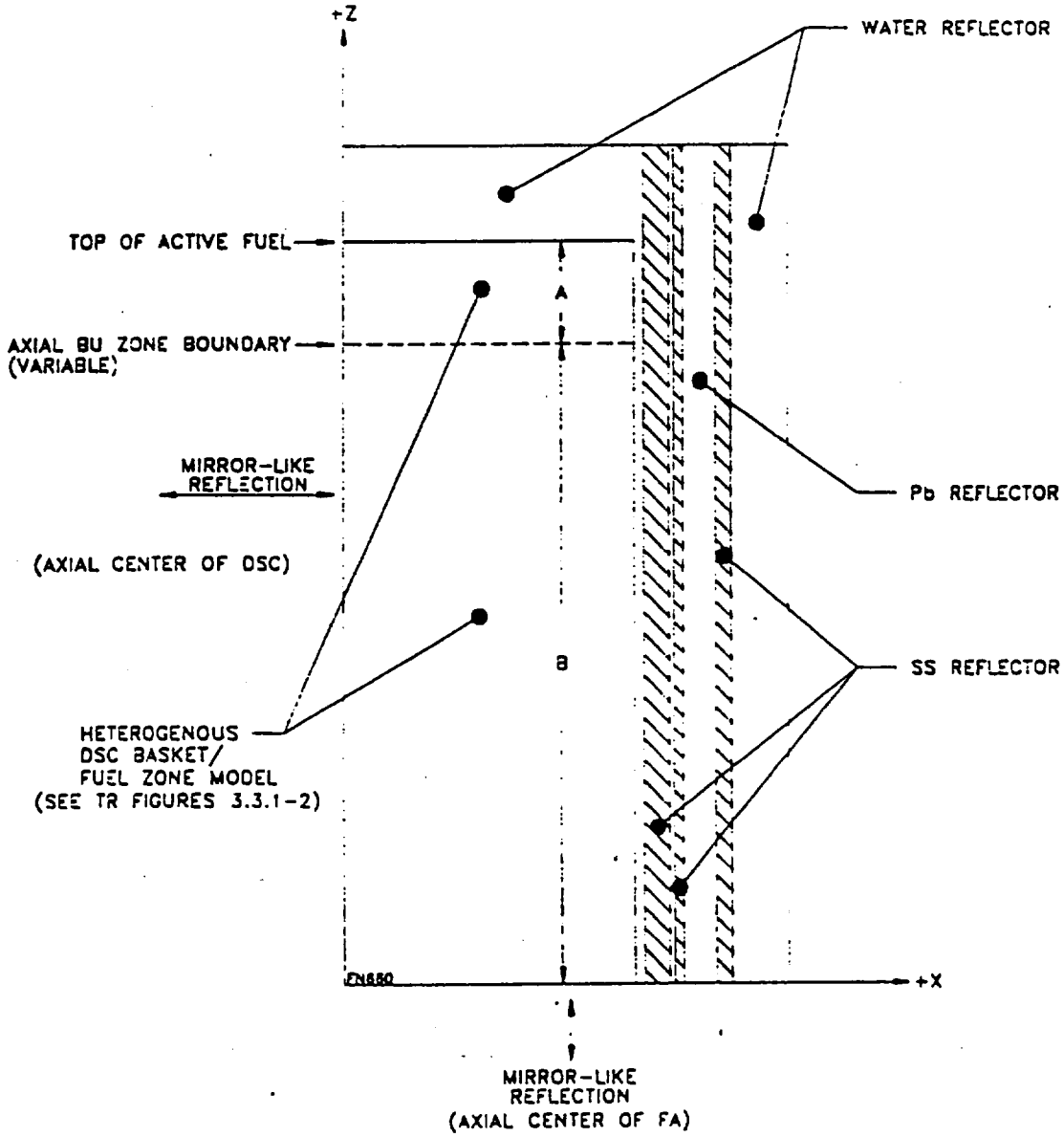

FUEL ZONE A: TOP FA/LOW BU ZONE (4.5" TO 24")
FUEL ZONE B: MID FA/AVG - HIGH BU ZONE (76.5" TO 48")

Figure 3.3-4
KENO Geometry of 1/8 NUHOMS®-24P DSC Array Model Used to Analyze Axial BU Variation Effects on Calculated Reactivity

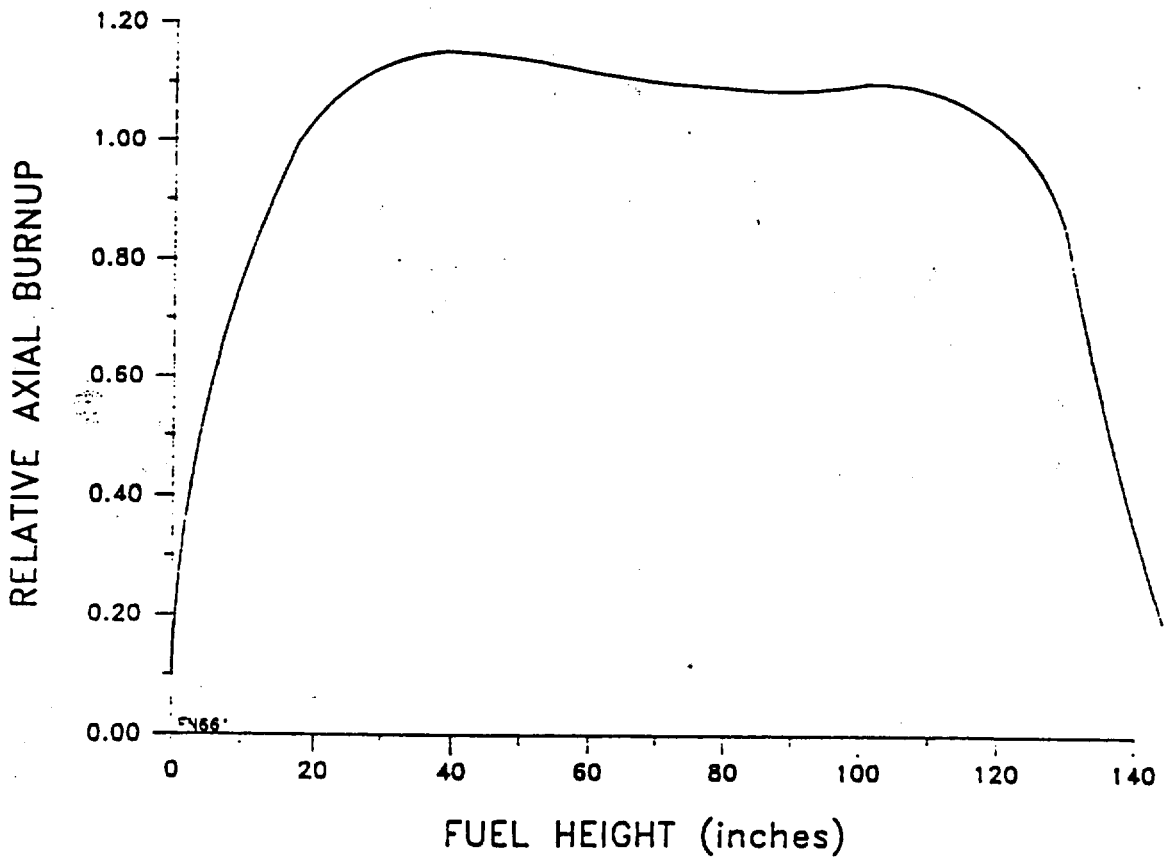

Figure 3.3-5
Relative Axial Burnup vs. Fuel Height Used in Axial BU Sensitivity Study NUHOMS®-24P DSC

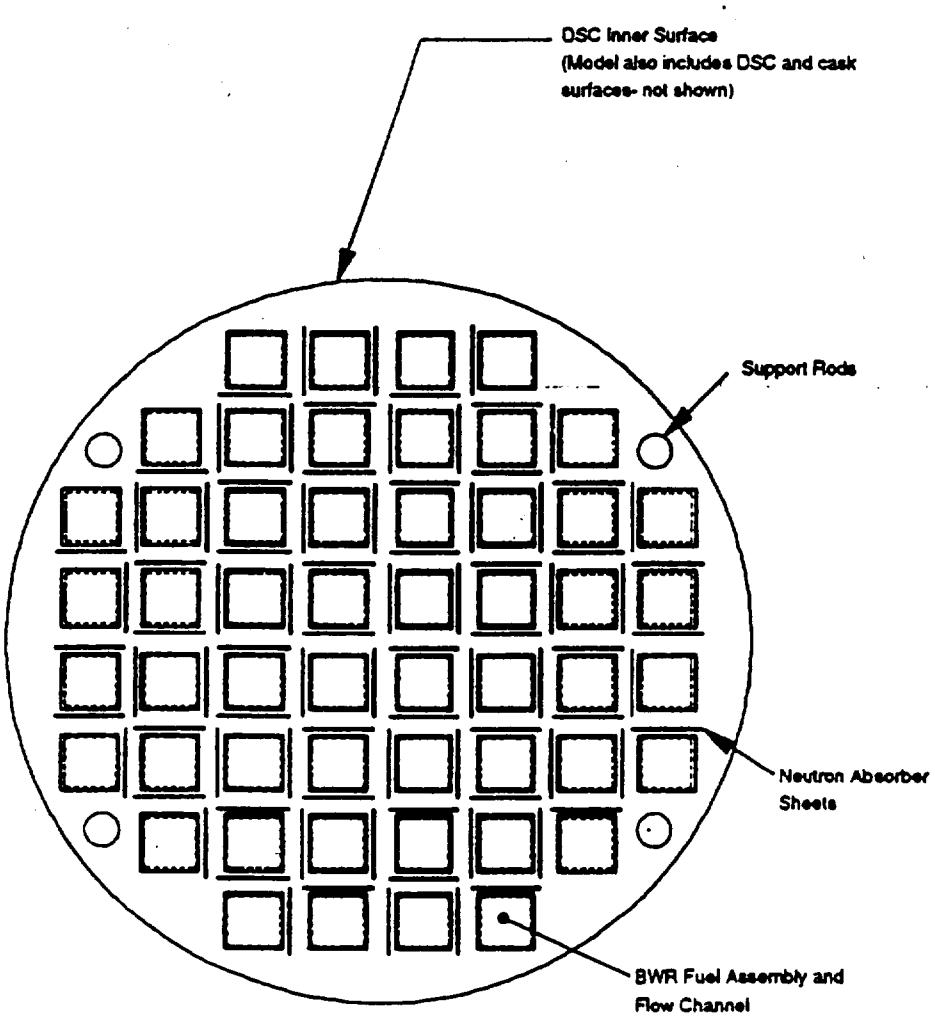

Figure 3.3-6
NUHOMS®-52B KENO Model General Arrangement (Internals)

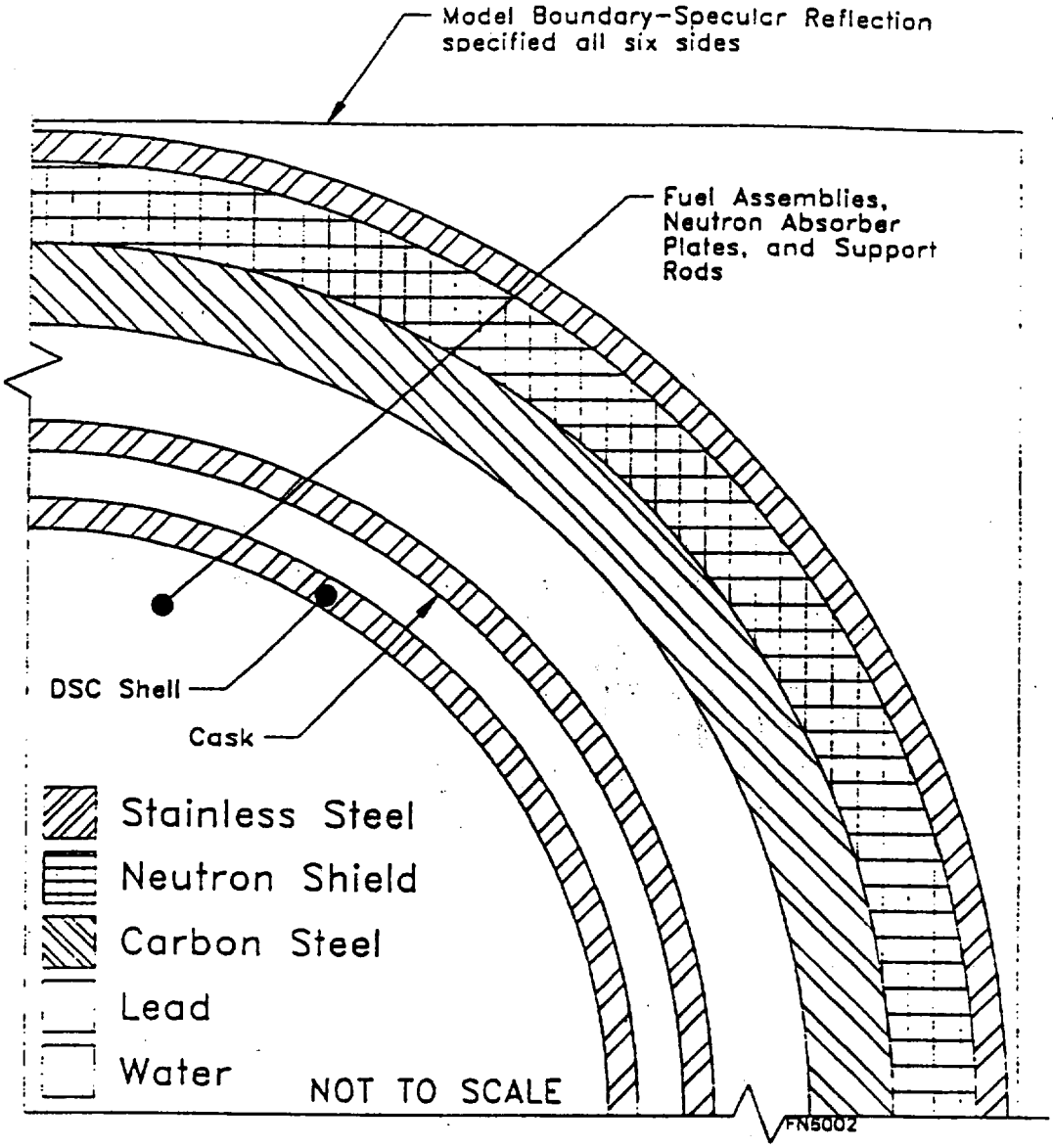

Figure 3.3-7
NUHOMS®-52B KENO Model Cask Arrangement

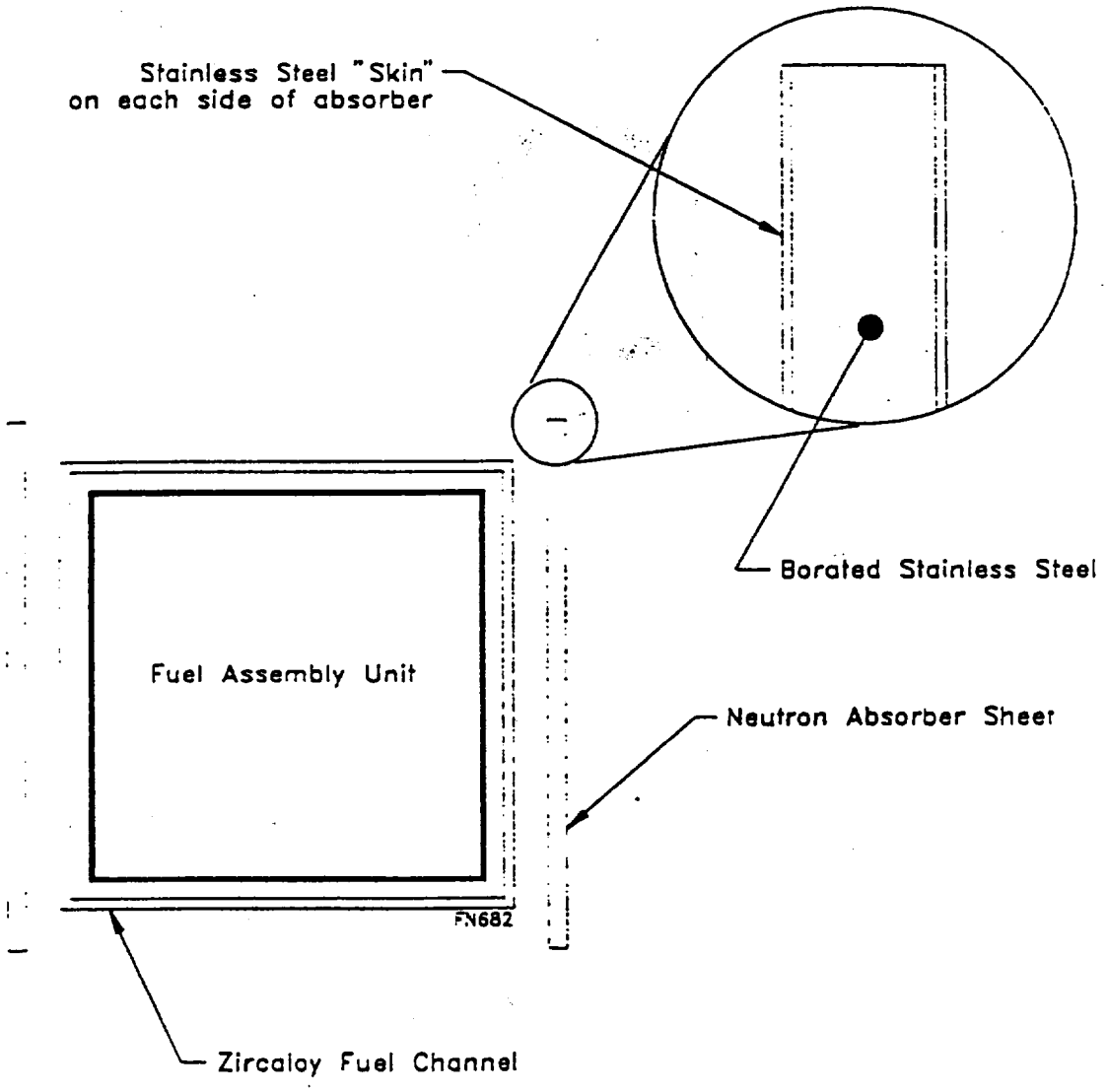

Figure 3.3-8
NUHOMS®-52B Typical Fuel Assembly Cell

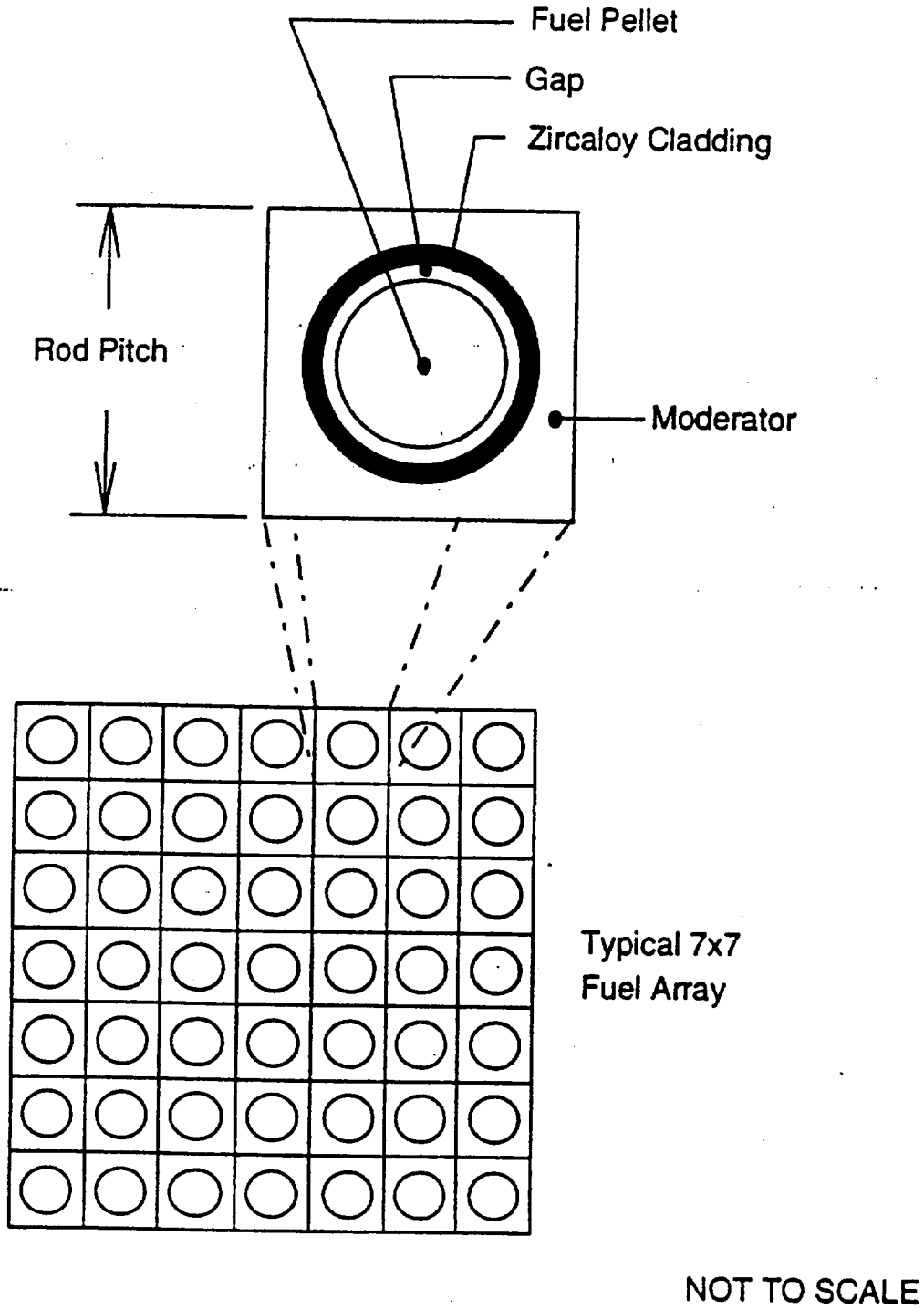

Figure 3.3-9
NUHOMS®-52B Typical Fuel Assembly Array (7x7)

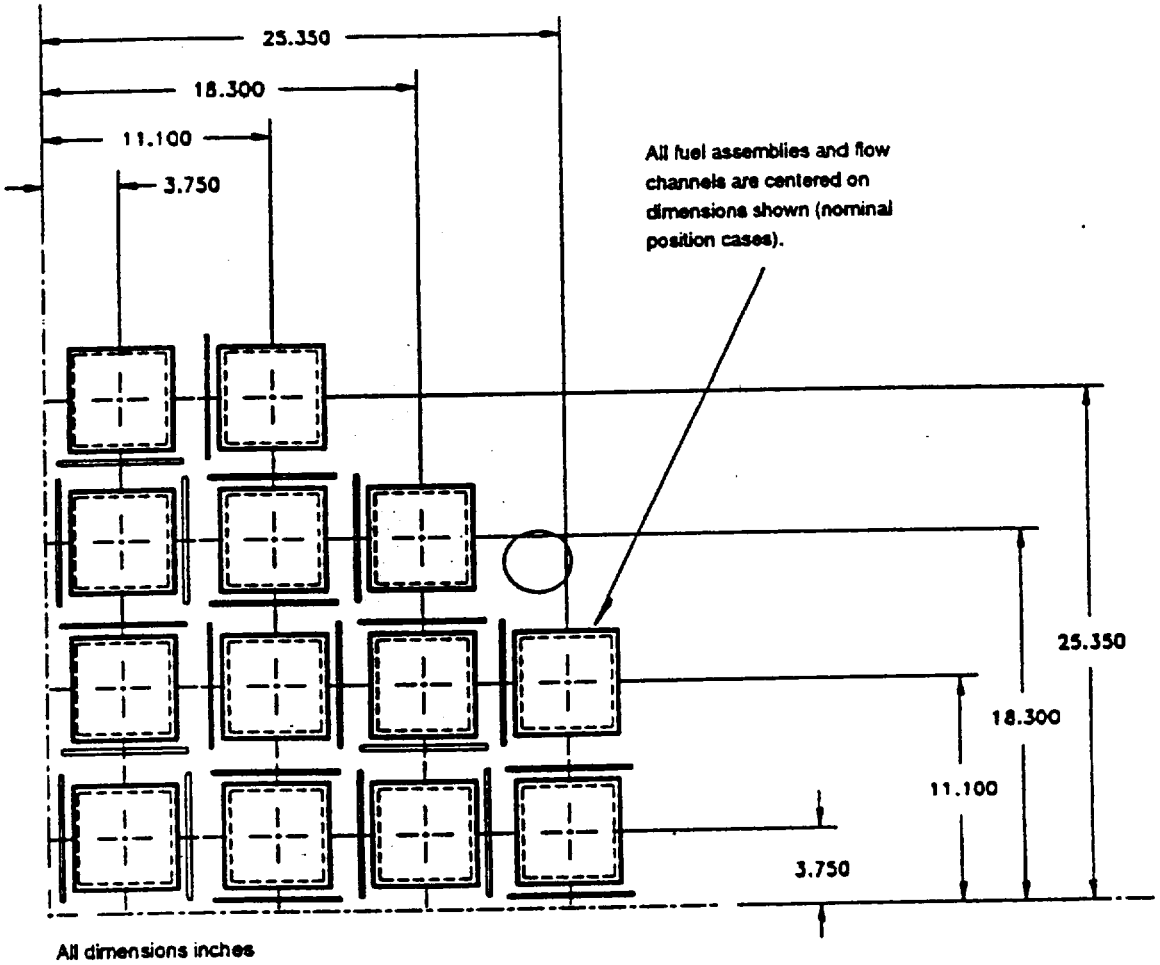

Figure 3.3-10
NUHOMS®-52B Location of Fuel Assemblies

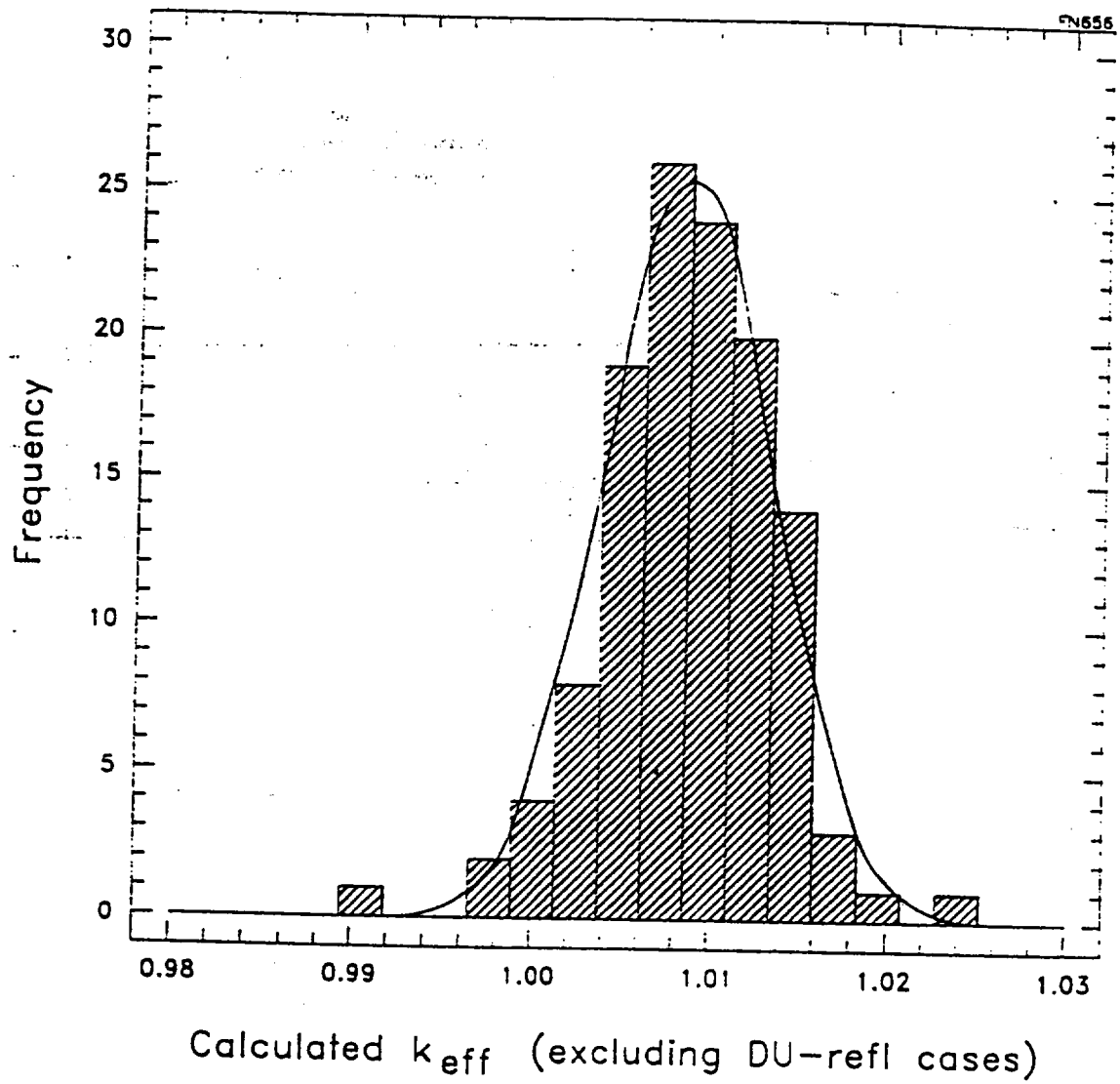

Figure 3.3-11
Histogram of keff Results for PNL Criticals

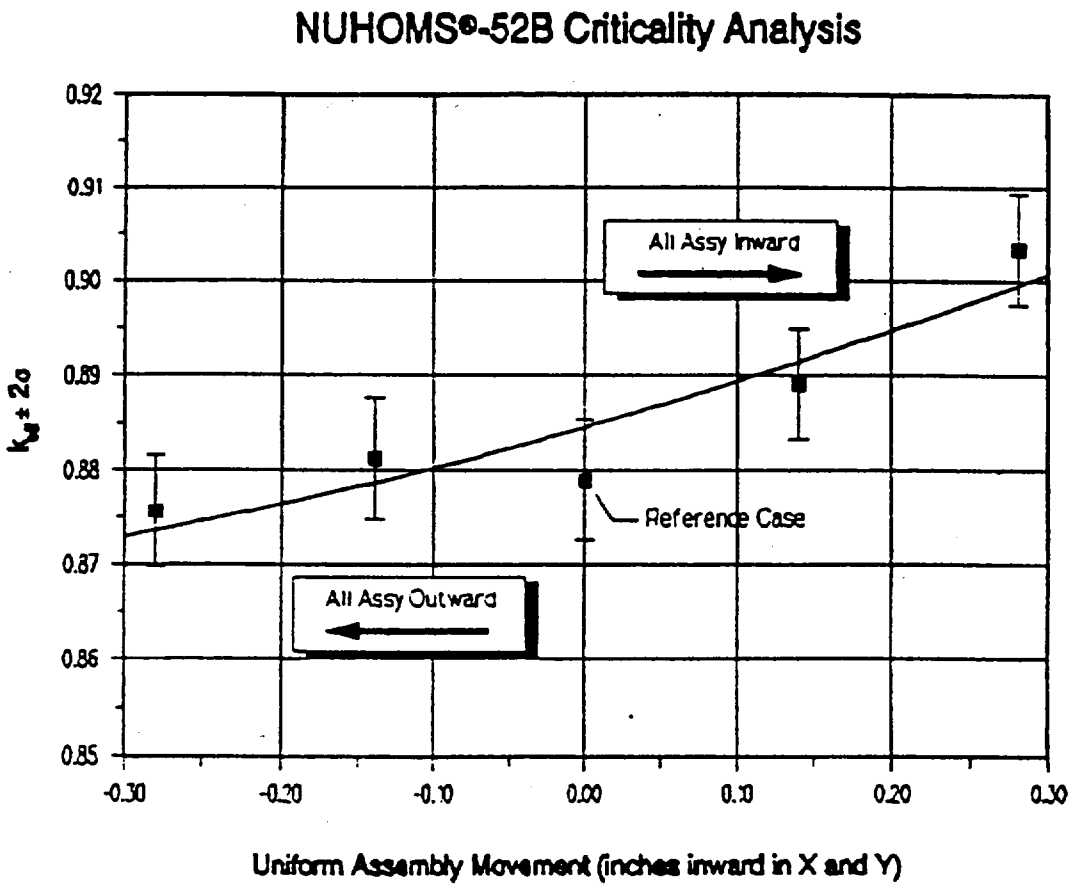

Figure 3.3-12
NUHOMS®-52B Fuel Assembly Position Sensitivity

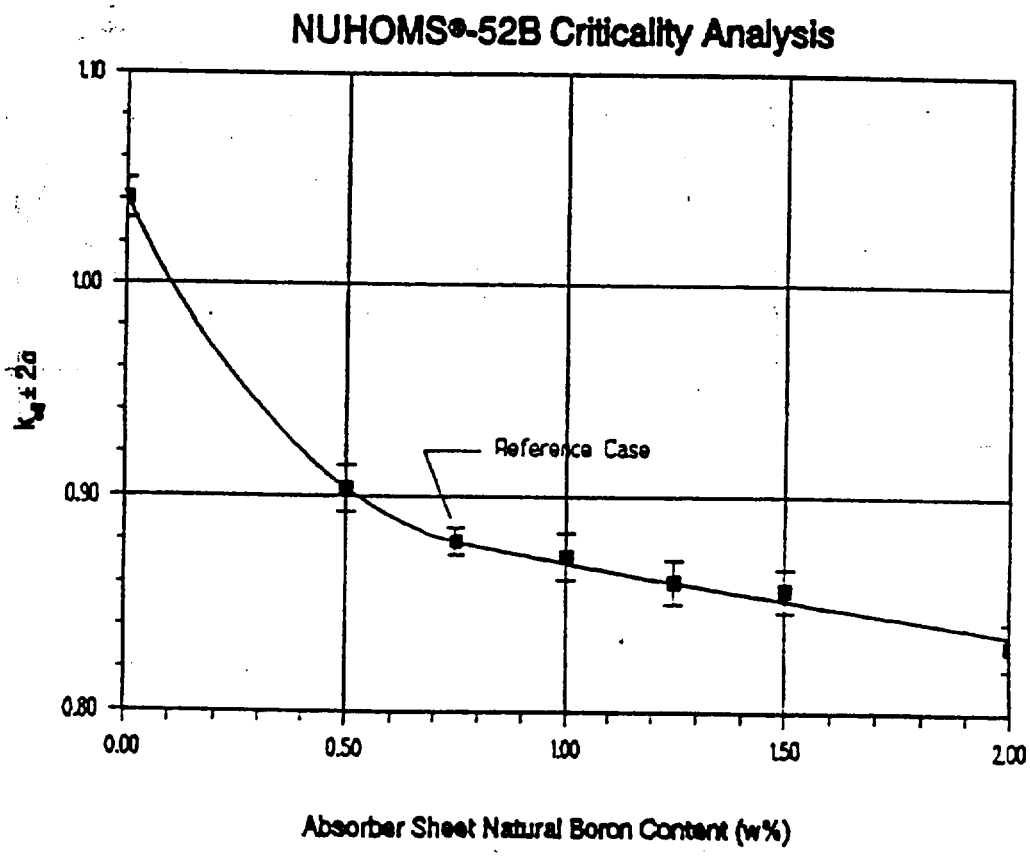

Figure 3.3-13
NUHOMS®-52B Neutron Absorber Boron Sensitivity Curve

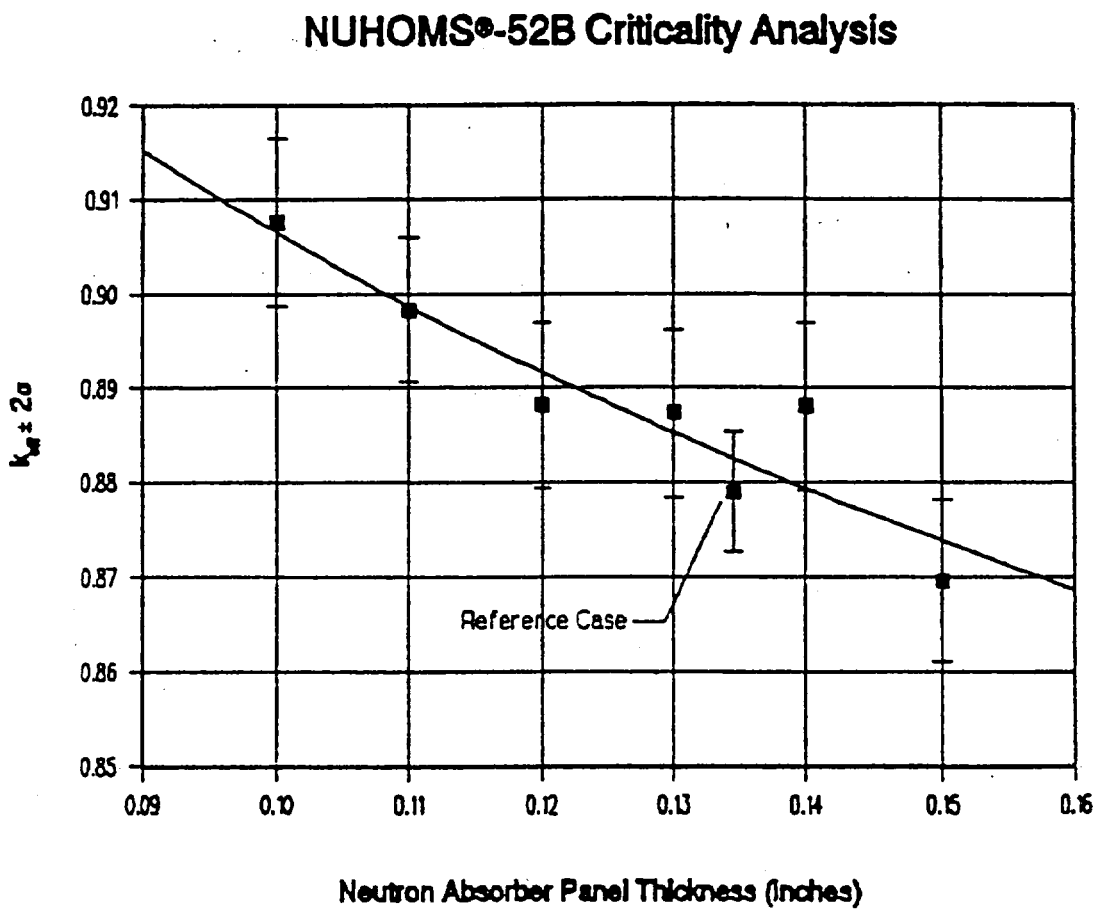

Figure 3.3-14
NUHOMS®-52B Absorber Sheet Thickness Sensitivity

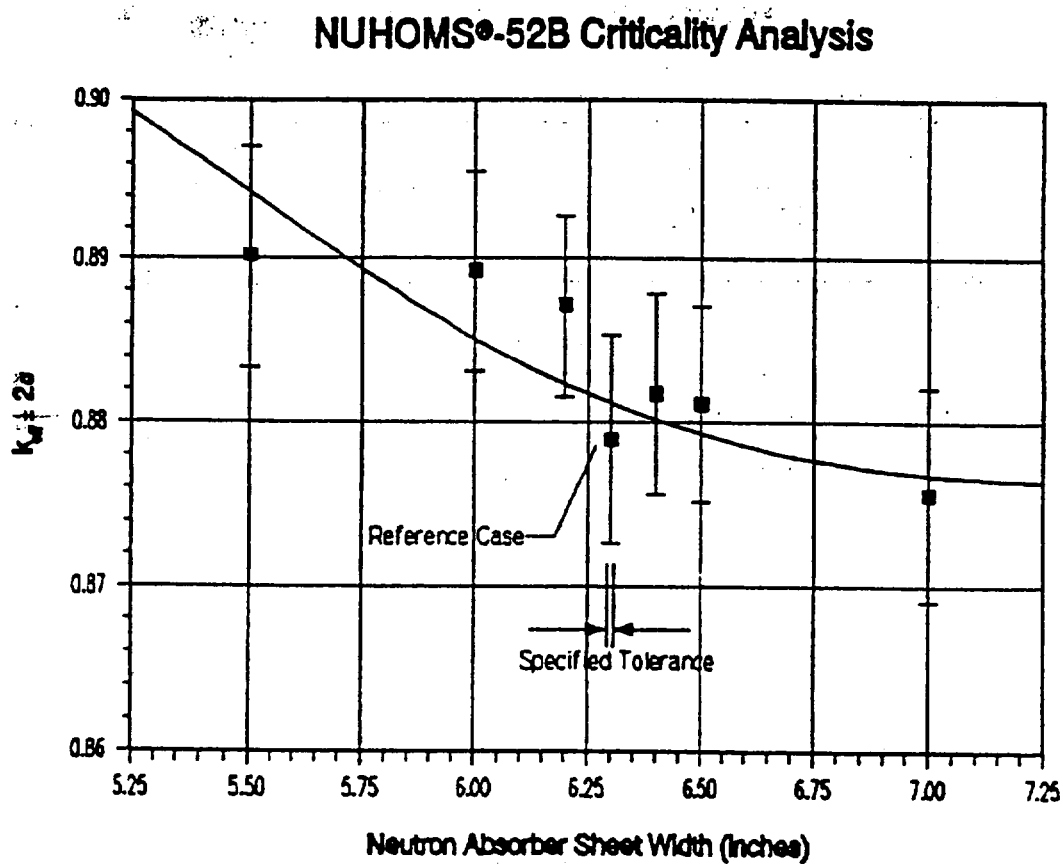

Figure 3.3-15
NUHOMS®-52B Neutron Absorber Width Sensitivity

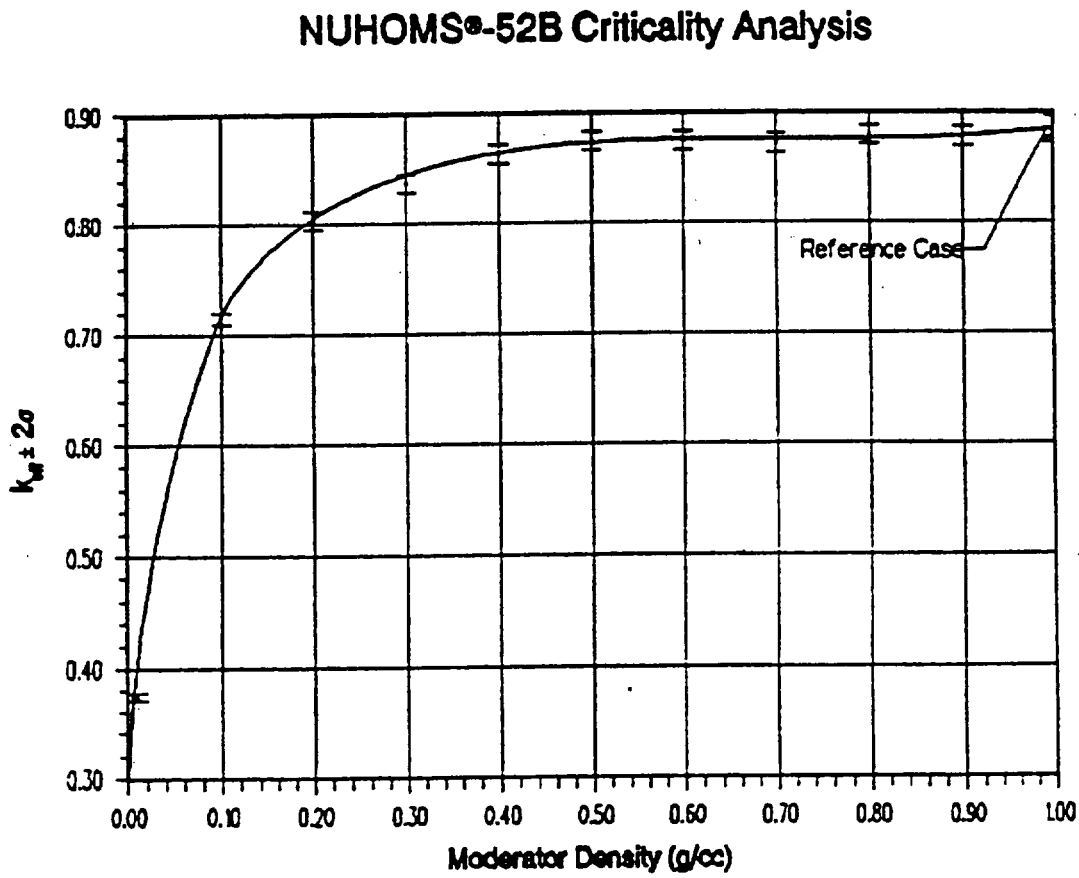

Figure 3.3-16
NUHOMS®-52B Moderator Density Sensitivity

3.4 Classification of Structures, Components, and Systems

Table 3.4-1 provides a list of major NUHOMS® ISFSI components and their classification. Components are classified in accordance with the criteria of 10CFR72 (3.6). Structures, systems, and components classified as "important to safety" are defined in 10CFR72.3 as those features of the ISFSI whose function is:

A. To maintain the conditions required to store spent fuel safely.

B. To prevent damage to the spent fuel container during handling and storage.

C. To provide reasonable assurance that spent fuel can be received, handled, packaged, stored, and retrieved without undue risk to the health and safety of the public.

These criteria are applied to the NUHOMS® system components in determining their classification in the paragraphs which follow.

3.4.1 Dry Shielded Canister

The DSC is considered "important to safety" since it provides fuel assembly support required to maintain the assumed fuel geometry for criticality control. Accidental criticality inside a DSC could lead to off-site doses comparable with the limits in 10CFR100 which must be prevented. The DSC also provides the primary containment for radioactive materials. Therefore, the DSC is designed to remain intact under all accident conditions identified in Chapter 8 with no loss of function. The DSC is designed, constructed, and tested in accordance with "important to safety" requirements as defined by 10CFR72, Subpart G, paragraph 72.140(b) and described in Chapter 11. The welding materials required to make the closure welds on the DSC inner and outer top cover plates are purchased to the same ASME Code criteria as the DSC (Subsection NB, Class 1).

3.4.2 Horizontal Storage Module

The HSM is considered "important to safety" since it provides physical protection and shielding for the spent fuel container (DSC) during storage. The reinforced concrete HSM is designed in accordance with ACI 349-85 and the level of testing, inspection, and documentation provided during construction and maintenance is in accordance with the quality assurance requirements as defined in 10CFR72, Subpart G, paragraph 72.140(b) and as described in Chapter 11.

3.4.3 ISFSI Basemat and Approach Slabs

The ISFSI basemat and approach slabs are not considered "important to safety" and are designed, constructed, maintained, and tested as a commercial grade items.

Licensees are required to perform an assessment to confirm that the license seismic criteria are met and that the HSM foundation design meets the stated design code.

3.4.4 Transfer Equipment

3.4.4.1 Transfer Cask and Yoke

The on-site transfer cask is "important to safety" since it protects the spent fuel container (DSC) during handling and is part of the primary load path used while handling the DSC in the fuel/reactor building. An accidental drop of a loaded transfer cask (weighing approximately 100 tons) has the potential for creating conditions in the plant which must be evaluated. Therefore the transfer cask is designed, constructed, and tested in accordance with "important to safety" requirements as defined by 10CFR72, Subpart G, paragraph 72.140(b) and described in Chapter 11.

The lifting yoke used for handling of the transfer cask within the fuel/reactor building is designed and procured as a "safety related" component as it is used by the licensee (utility) under the 10CFR50 (3.65) program. The lifting yoke is controlled by NUREG-0612 (3.66) and is designed to ANSI N14.6-1986 criteria for non-redundant yokes. Therefore, the lifting yoke is designed, constructed, and tested in accordance with "safety related" requirements as defined by 10CFR50, Appendix B and described in Chapter 11.

Due to site unique requirements, rigid or sling lifting members may be used to augment the lifting yoke. These members shall be designed, fabricated and tested in accordance with the same requirements as the cask lifting yoke.

3.4.4.2 Other Transfer Equipment

The NUHOMS® transfer equipment (i.e., ram, skid, trailer) are necessary for the successful loading of the DSC into the HSM. However, the analyses described in Chapter 8 demonstrate that the performance of these items is not required to provide reasonable assurance that spent fuel can be received, handled, packaged, stored, and retrieved without undue risk to the health and safety of the public. Therefore, these components are considered not "important to safety" and need not comply with the requirements of 10CFR72. These components are designed, constructed, and tested in accordance with good industry practices.

3.4.5 Auxiliary Equipment

The vacuum drying system and the automatic welding system are not "important to safety". Performance of these items is not required to provide reasonable assurance that spent fuel can be received, handled, packaged, stored, and retrieved without undue risk to the health and safety of the public. Failure of any part of these systems may result in delay of operations, but will not result in a hazard to the public or operating personnel. Therefore, these components need not comply with the requirements of 10CFR72. These components are designed, constructed, and tested in accordance with good industry practices.

Table 3.4-1
NUHOMS® Major Components and Safety Classification

Component	10CFR72 Classification
Dry Storage Canister (DSC)	Important to Safety[1]
Guide Sleeves	
Spacer Disks	
Support Rods	
Shield Plugs	
DSC Shell	
Cover Plates	
Weld Filler Metal	
Horizontal Storage Module (HSM)	Important to Safety[1]
Reinforced Concrete	
DSC Support Structure	
ISFSI Basemat and Approach Slabs	Not Important to Safety
Transfer Equipment	
On-site Transfer Cask	Important to Safety[1]
Cask Lifting Yoke	Safety Related[2]
Transport Trailer/Skid	Not Important to Safety
Ram Assembly	Not Important to Safety
Dry Film Lubricant	Not Important to Safety
Auxiliary Equipment	Not Important to Safety
Vacuum Drying System	
Automatic Welding System	

(1) Structures, systems and components "important to safety" are defined in 10CFR72.3 as those features of the ISFSI whose function is (1) to maintain the conditions required to store spent fuel safely, (2) to prevent damage to the spent fuel container during handling and storage, or (3) to provide reasonable assurance that spent fuel can be received, handled, packaged, stored, and retrieved without undue risk to the health and safety of the public.

(2) Yoke and rigid or sling lifting members are classified as "Safety Related" in accordance with 10CFR50.

4.2 Storage Structures

4.2.1 Structural Specifications

The design bases for the NUHOMS® ISFSI are described in Chapter 3. Fabrication and construction specifications will be utilized in accordance with 10CFR72 (4.1) and industry codes and standards. The codes and standards used for fabrication and construction the NUHOMS® components, equipment, and structures are identified throughout the SAR. They are summarized as follows:

Component, Equipment, Structure	Code of Construction
DSC	ASME Code, Section III, 1983 Edition with Winter 1985 Addenda (4.5) Subsection NB
Transfer Cask	ASME Code, Section III, 1983 Edition with Winter 1985 Addenda (4.5) Subsection NC as applicable for non-pressure retaining vessels, excluding Subsection NCA.
HSM	ACI-318-83 Code (4.10)
DSC Supports	AISC Specification, 1989 Edition (4.11)
Transfer Equipment	AISC, ANSI, AWS and/or other applicable standards

The ASME Code boundaries for the DSC and transfer cask are identified on the corresponding Appendix E design drawings.

4.2.2 Installation Layout

The specific layout of the ISFSI will be developed by the licensee in accordance with the requirements of 10CFR72. Layouts for typical NUHOMS® ISFSIs are shown in Figures 1.3-11 through 1.3-13. The functional features of the NUHOMS® storage structures are shown on the Appendix E licensing drawings. Radioactive particulate matter and gaseous fission products are confined within the DSC as discussed in Sections 1.2 and 1.3.

4.2.3 Individual Unit Description

4.2.3.1 Dry Shielded Canister

The DSC is a high integrity stainless steel welded pressure vessel that provides confinement of radioactive materials, encapsulates the fuel in a helium atmosphere, and, when placed in the transfer cask, provides biological shielding during DSC closure and transfer operations. The NUHOMS® DSC design is illustrated in Figures 1.3-1 through 1.3-3. Licensing drawings for the standardized DSC are contained in Appendix E.

The DSC cylindrical shell is fabricated from rolled and butt-welded stainless steel plate material as shown in Figure 4.2-1. Stainless steel cover plates and thick carbon steel or lead encased in steel shielding material form the DSC top and bottom end assemblies. The cover plates are double seal welded to the DSC shell to form the containment pressure boundary.

The DSC shell, and top and bottom end assemblies enclose a basket assembly which serves as the structural support for the SFAs as shown in Figure 4.2-2 and Figure 4.2-3. The PWR fuel basket assembly consists of stainless steel guide sleeves, eight spacer discs and four support rods. Criticality control is achieved by use of water with dissolved boron in the DSC cavity as described in Section 3.3. The BWR basket assembly is of similar design and contains fixed neutron absorbing plates to provide criticality control for channeled BWR fuel assemblies in non-borated water. The spacer disks maintain the cross-sectional spacing of the fuel assemblies and provide lateral support for the fuel assemblies and the guide sleeves. The spacer disks are held in place by the support rods which maintain longitudinal separation during a postulated cask drop accident.

The shield plugs at each end of the DSC provide biological shielding when the DSC is in the transfer cask or in the HSM. The top shield plug is captured between the supporting ring and the top cover plates, which provide a redundant pressure retaining function. The bottom shield plug and cover plates, the internal basket assembly, the shell and support ring, and the grapple ring are shop fabricated assemblies. The top shield plug and top cover plate assemblies are installed at the plant after the fuel assemblies have been loaded into the DSC internal basket. A small diametral gap is provided between the top shield plug and the DSC shell. The minimum radial gap at any point on the circumference of the top shield plug/DSC shell annulus is controlled during fabrication. This gap is adequate to allow the plug to be freely inserted or removed from the DSC shell assembly with the DSC submerged in the fuel pool.

A "Strongback Device" is placed over the inner top cover plate of the DSC and attached to the transfer cask (TC) during draining, backfilling, and leak testing. The strongback is used to prevent deflection of the cover plate during these operations which involve significant DSC pressurization.

The inner top cover plate is welded to the DSC shell to form the inner pressure boundary at the top end of the DSC as shown in Figure 4.2-4 and Figure 4.2-5. The outer pressure boundary is provided by the outer top cover plate which is also welded to the DSC shell. All closure welds are multiple-pass welds. This effectively eliminates any pinhole leak which might occur in a single-pass weld, since the chance of pinholes being in alignment on successive weld passes is negligibly small. In addition, the DSC cover plates are sealed by separate, redundant closure welds. The circumferential and longitudinal shell plate weld seams are fabricated using multipass full penetration butt welds. The butt weld joints are fully radiographed and inspected according to the requirements of Section V of the ASME Boiler and Pressure Vessel Code, to insure that the integrity of the welded joint is as sound as the parent metal itself. The remaining pressure boundary welds are inspected to the same code standards, using either ultrasonic or multi-level dye penetrant examination.

These stringent design and fabrication requirements insure that the containment pressure retaining function of the DSC is maintained. It should be noted that pressure monitoring instrumentation is not used since penetration of the pressure boundary would be required. The penetration itself would then become a potential leakage path and, by its presence, compromise the leak tightness of the DSC design.

The top shield plug support ring assembly includes drain and fill ports. The design incorporates two small diameter tubing penetrations into the DSC cavity for draining and filling operations. One penetration, the vent port, is terminated at the bottom of the shield plug assembly. The other port is attached to a siphon tube, which continues to the bottom of the DSC cavity. The drain and fill port includes a two plane, dog-leg type offset to prevent radiation streaming. The drain and fill ports terminate in normally closed quick-connect fittings. Both ports are used to remove water from the DSC during the drying and sealing operations.

The drying and sealing operations are described in Section 4.7.3. Transfer of the DSC to the HSM by the hydraulic ram is done by grappling the ring plate assembly welded to the bottom cover plate of the DSC. This assembly prevents significant deformation and bending stresses in the DSC during handling. When the DSC is transferred by the hydraulic ram, the load is sustained by this cover plate.

Four lifting lug plates are provided on the interior of the DSC shell to facilitate placement of the empty DSC into the transfer cask prior to fuel loading. The DSC is lowered into the transfer cask cavity using the fuel/reactor building crane or other suitable crane at the utility's option. Shackles and rope slings are used to rig the DSC lifting lugs to the crane hook.

The DSC azimuthal orientation during insertion into the transfer cask is achieved by alignment of match marks on the DSC and the cask top ends. In addition, a key-way

detail is used for the DSC basket assembly to ensure that the fuel matrix orientation with the DSC shell and transfer cask is maintained

Frictional loads during DSC transfer are reduced by the application of a dry film lubricant to the support rails inside the HSM and the transfer cask which are in contact with the DSC shell during horizontal DSC transfer. The lubricant chosen for this application is a tightly adhering inorganic lubricant with an inorganic binder. The dry film lubricant provides a thin, clean, dry, layer of lubricating solids that is intended to reduce wear, and prevent galling in metals. It is applied as a thin sprayed coating, like paint, using a carefully controlled process. The lubricant is not affected by water and is designed to be highly resistant to aggressive chemicals such as fuming nitric acid and hydrazine and to maintain its lubricity when exposed to these chemical agents. This product is designed for radiation service and has a low coefficient of sliding friction against stainless steel.

Following DSC fabrication, leak tests of the DSC shell assembly as well as the drain and fill port subassembly are performed in accordance with the ASME Code, Section III, Subarticle NB-5300 and Section V, Article 10. The leak tests provision of the ASME Code meet the intent of ANSI N14.5-1977, "American National Standard for Radioactive Materials - Leakage Tests on Packages for Shipment" (4.12).

The DSC shell is pressure tested in accordance with the ASME Code, Section III, Subarticle NB-6300. This pressure test may be performed after installation of the inner bottom cover plate and concurrently with the leak test, provided the requirements of NB-6300 are met. The minimum test pressures for BWR and PWR DSCs are 10.1 psig and 10.6 psig, respectively (4.18, 4.19).

The principal materials of construction for the NUHOMS® DSC are stainless and carbon steel. All structural component parts of the DSC are fabricated from these materials. Carbon steel is used for the DSC internals excluding the guide sleeves which are stainless steel. The DSC cylindrical shell and the cover plates which form the DSC containment pressure boundary are stainless steel. Lead is used as a shielding material in the long-cavity PWR canister shield plugs.

4.2.3.2 The Horizontal Storage Module

The design of the prefabricated NUHOMS® HSM has been developed in accordance with the applicable codes and a quality assurance program suitable for design of structures important to safety, as documented in Chapter 3. The design of the prefabricated NUHOMS® HSM has been performed using techniques similar to those reviewed and approved by the NRC for the NUHOMS®-24P design (4.13). The width and height of the HSM cavity and effective shielding thicknesses are the same.

The HSM is a massive reinforced concrete structure that provides protection for the DSC against tornado missiles and other potentially adverse natural phenomena. The HSM also

serves as the principal biological shield for the spent fuel during storage. The NUHOMS® HSM design is illustrated in Figures 1.2-2 and 1.3-4. Licensing drawings for the HSM are contained in Appendix E. Details for the standardized HSM are depicted in the illustrations and drawings referred to herein.

The HSM contains four shielded air inlet openings in the lower side walls of the structure to admit ambient ventilation air into the HSM as shown in Figure 4.2-6 and Figure 4.2-7. The cooling ventilation air flows around the DSC (see Figure 1.3-5) to the top of the HSM. Air warmed by the DSC is exhausted through four shielded vent openings near the HSM roof slab. Adjacent modules are spaced to provide adequate ventilation flow and shielding. This passive system provides an effective means for spent fuel decay heat removal. A heat shield is provided between the DSC and HSM concrete to mitigate concrete temperatures.

The DSC rests on a frame structure with support rails in the cavity of the HSM, and is anchored to the HSM floor slab and side wall. The DSC support structure is fabricated from structural steel as shown in Figure 4.2-8. The DSC support structure member sizes and connection details are shown on the Appendix E drawings. The support structure is shimmed level and connected (bolt to floor and to wall) to the HSM floor slab and wall during module assembly. The support rails extend into the HSM access opening, which is slightly larger in diameter than the DSC. The HSM access opening has a stepped flange sized to facilitate docking of the transfer cask as shown in Figure 4.2-9. This configuration minimizes streaming of radiation through the HSM opening during DSC transfer.

The DSC support rails are shimmed to parallel and level, then welded to embedded plates in the HSM opening. Thermal expansion of the support rails is accommodated by the DSC support system design. The top surfaces of the rails, on which the DSC slides, are coated with a dry film lubricant (see previous discussion for DSC) which is suitable for a radiation environment. The support rail sliding surfaces consist of hardened stainless steel cover plates for corrosion protection and added lubricity. Inside the HSM, the heat rejected from the DSC has a drying effect. Thus, the HSM atmosphere is benign in terms of corrosion, decay heat warms the air, thus preventing the accumulation or condensation of moisture inside the HSM.

The DSC is prevented from sliding along the support rails during a postulated seismic event by rail stops attached to the ends of the DSC support rails, and a retainer located in the front access door of the HSM. The DSC axial retainer design is shown in Figure 4.2-9.

Clearance between the axial retainer and the DSC is designed for the maximum DSC thermal growth which occurs during the postulated HSM blocked vent case, as discussed in Section 8.2-7. During normal storage there is a small gap which may allow movement of the DSC relative to the HSM. This motion would produce a small increase in the DSC axial force due to seismic loads if these forces were sufficient to overcome friction between

the rails and DSC. For conservatism, these effects have been included in the design analysis.

The HSM wall and roof thicknesses are primarily dictated by shielding requirements. The massive walls adequately protect the DSC against tornado missiles and other adverse natural phenomena. The tornado generated missile effects are considered to bound any other reasonable impact-type accident. The HSM wall thickness for individual modules and HSM arrays are specified on the Appendix E drawings and discussed in Section 4.1.2.

The entrance to the HSM is covered by a thick steel door which provides protection against tornado missiles. The HSM door details are shown in Figure 4.2-9. The door assembly includes a solid concrete core which acts as a combined gamma and neutron shield. For security purposes, the HSM door may be welded to the HSM access opening docking collar, in addition to the bolted brackets which attach the door and transfer loads from the HSM door to the docking collar.

During DSC insertion/withdrawal operations, the transfer cask is docked with the HSM docking collar and mechanically secured to embedments provided in the front wall of the HSM. The cask restraints used for this purpose are shown in Figure 4.2-13. The embedments are equally spaced on either side of the HSM access opening. The HSM embedments are designed in accordance with the requirements of ACI 349 Code (4.14). The transfer cask restraint system is designed for loads which occur during normal DSC transfer operations and during an off-normal jammed DSC event.

The HSM gap between modules is covered with stainless steel wire bird screen to prevent pests or foreign material from entering the HSM. Periodic surveillance constitutes the only required maintenance activity for the NUHOMS® ISFSI.

It is expected that during the installation and loading of an HSM array there will be empty modules. Vacant HSMs can occur due to: partial filling of a complete construction phase of HSMs, or a partial filling of a phase of HSMs which will be expanded at a future date. The following issues have been evaluated for both cases: Normal Operation Issues, Construction Issues, and Accident Condition Issues. During installation of an additional HSM(s), or for other reasons, shield wall(s) may be removed for a period of time. However, compensatory measures shall be considered for radiation shielding and for missile protection, if necessary.

The design flexibility of the HSMs permits a licensee to choose the most economical arrangement of HSMs which best meets plant specific conditions and requirements. This SAR presents a detailed analysis for a single stand-alone module as this is the governing design case for the postulated environmental loads such as earthquake, flooding, and tornado loads. Thermal loads also provide significant loadings for the HSM structural design for the free-standing prefabricated HSM.

A typical reinforcing steel layout for the HSM floor, walls, and roof is shown in Figure 8.1-19. The reinforcement sizing and placement specified is used for HSM array configurations ranging in size from a single stand alone module to a 2x10 array of HSMs or larger. Licensing details, such as concrete joint and reinforcing bar lap splice requirements, are shown on the Appendix E drawings.

The HSM design documented in this SAR is constructed of 5,000 psi (min.) normal weight (145 pounds per cubic foot minimum density) concrete with Type II Portland cement meeting the requirements of ASTM C150 (4.6). The concrete aggregate meets the specifications of ASTM C33 (4.6). The concrete is reinforced by ASTM A615 or A706 Grade 60 (4.7) deformed bar placed vertically and horizontally in each face of the walls, roof and floor. If the total spent fuel decay heat and the limiting ISFSI temperatures are such that the resulting HSM concrete general or local area temperatures for normal and off-normal conditions are less than or equal to 200°F, no aggregate testing other than ASTM C33 is required. In cases where the licensees total spent fuel decay heat for the DSC and the limiting ISFSI temperatures are such that the resulting HSM concrete general or local area temperatures for normal and off-normal conditions exceed 200°F, but are less than or equal to 300°F, the following requirements for aggregate apply:

- Satisfy ASTM C33 requirements
- Coarse and fine aggregate
    - Have a demonstrated coefficient of thermal expansion no greater than 6×10^{-6} in/in°F, or
    - Be one of the following minerals: limestone, dolomite, marble, basalt, granite, gabbro, or rhyolite.

In cases where the normal and off-normal conditions are less than or equal to 225°F, the following requirements appy for fine aggregates only:

- Fine aggregate
    - Have a demonstrated coefficient of thermal expansion no greater than 6×10^{-6} in/in°F, or
    - Be composed of quartz sand, sandstone sands, or any sands of any of the following minerals: limestone, dolomite, marble, basalt, granite, gabbro, or rhyolite.

4.2.3.3 On-Site Transfer Cask

The on-site transfer cask is a nonpressure-retaining cylindrical vessel with a welded bottom assembly and bolted top cover plate. The transfer cask is designed for on-site transport of the DSC to and from the plant's spent fuel pool and the ISFSI as shown in

Figure 4.2-10 and Figure 4.2-11. The transfer cask provides the principal biological shielding and heat rejection mechanism for the DSC and SFAs during handling in the fuel/reactor building. DSC closure operations. transport to the ISFSI. and transfer to the HSM. The transfer cask also provides primary protection for the loaded DSC during off-normal and drop accident events postulated to occur during the transport operations. The NUHOMS® transfer cask is illustrated in Figure 1.3-6. Licensing drawings of the transfer cask are contained in Appendix E.

The transfer cask may be fitted with a shielded collar to extend the cask cavity length to accommodate the longer NUHOMS®-52B DSC as shown in Figure 4.2-12. The collar is a heavy forged steel ring with a bolt circle to match that of the transfer cask top flange and cover plate. Drawings for the cask extension collar are contained in Appendix E. Alternatively, a NUHOMS® transfer cask with a longer cavity length may be used for DSCs with PWR (with cask spacer) or BWR fuel.

The transfer cask to be used by a utility may be of the design documented in Appendix E. or any other previously NRC reviewed and approved design such as the transfer cask designs documented in the NUHOMS®-24P Topical Report [4.13], the Oconee Nuclear Station ISFSI Safety Analysis Report [4.16], and the Calvert Cliffs ISFSI Safety Analysis Report [4.17]

The transfer cask is constructed from three concentric cylindrical shells to form an inner and outer annulus. These are filled with lead and a neutron absorbing material. The two inner shells are welded to heavy forged ring assemblies at the top and bottom ends of the cask as shown in Figure 1.3-6. Rails fabricated from a hardened. non-galling, wear resistant material coated with a high contact pressure dry film lubricant are provided to facilitate DSC transfer. All surfaces exposed to fuel pool water are stainless steel. The transfer cask structural shell and the bolted top cover plate may be fabricated from carbon or stainless steel. The transfer cask carbon steel structural shell and top cover plate are coated with a durable epoxy paint which is shop applied in accordance with the manufacturer's standards. This coating system is suitable for immersion service with a continuous temperature of 250°F with intermittent temperatures to 400°F.

The method used to cast the transfer cask lead shielding will vary between fabricators. Only one transfer cask need be utilized for each ISFSI. Transfer casks for different ISFSIs may be supplied by different fabricators. Each fabricator is required to submit detailed procedures for the lead pour consistent with the requirements delineated on the Appendix E drawings. These procedures include specific locations and sealing of pour holes, temporary bracing, and controlled cooling methods for the lead, all of which must meet the applicable codes and standards.

The transfer cask neutron shield cavity is fabricated as a pressure vessel since it is desirable to have this cavity remain leak tight to prevent intrusion of contaminated spent fuel pool water. Also, the support members for the outer shell of the solid neutron shield

are angled at 45° with respect to the transfer cask structural shell to further enhance shielding and decay heat removal. Solid neutron shielding materials are also incorporated into the top and bottom end closures to provide effective radiological protection.

Two trunnion assemblies are provided in the upper region of the cask for lifting of the transfer cask and DSC inside the plant's fuel/reactor building, and for supporting the cask on the skid for transport to and from the ISFSI. An additional pair of trunnions in the lower region of the cask are used to position the cask on the support skid, serve as the rotation axis during down-ending of the cask, and provide support for the bottom end of the cask during transport operations. There are no testing requirements per the ASME Code for the transfer cask trunnions. Neither the transfer cask nor the trunnions are special lifting devices per ANSI N14.6. Nonetheless, for transfer casks fabricated under the General License, a one-time pre-service load test of the trunnions is performed at a load equal to 150% of the 100 ton design load followed by an examination of all accessible trunnion welds. Trunnion testing is neither applicable nor required for existing NUHOMS® transfer casks previously licensed for site specific use (e.g., Calvert Cliffs and Oconee plants).

The cask bottom ram penetration cover plate is a water tight closure used during fuel loading in the fuel pool, during DSC closure operations in the cask decon area, and during cask handling operations in the fuel/reactor building. The circular projection on the transfer cask bottom cover plate is dimensioned to ensure that the DSC does not contact any surface of the bottom cover plate assembly. Prior to cask transport from the plant's fuel/reactor building to the HSM, the bottom cover plate of the cask is removed and a temporary neutron/gamma shield plug is attached. An illustration of the temporary shield plug design is shown in Figure 4.2-14. The temporary shield plug is a two piece construction with a center cover which is removed for ram insertion. The temporary shield plug is designed such that the contact dose rate is ALARA. The temporary shield plug may be deleted based on an ALARA evaluation. Typically, the shield plug is not utilized with the integral ram transfer trailer/skid.

Alignment of the DSC with the transfer cask is achieved by the use of permanent alignment marks on the DSC and transfer cask top surfaces. These marks facilitate orienting the DSC to the required azimuthal tolerances for fuel loading using the plant's fuel handling machine.

The yoke design used for cask handling is a non-redundant two point lifting device with a single pinned connection to the crane hook as shown in Figure 4.2-15. Thus, the yoke balances the cask weight between the two trunnions and has sufficient margin for any minor eccentricities in the cask vertical center of gravity which may occur. The yoke and other lifting devices are designed and fabricated to meet the requirements of ANSI N14.6 (4.9). The test load for the yoke and other lifting devices is 300% of the design load, with annual dimensional and liquid penetrant or magnetic particle inspection, to meet ANSI N14.6 requirements.

As shown in Figure 4.2-16, the cask upper flange is designed to allow an inflatable seal to be inserted between the cask liner and the DSC. The seal is fabricated from reinforced elastomeric material rated for temperatures well above boiling. The seal is placed after the DSC is located in the cask and serves to isolate the clean water in the annulus from the contaminated water in the spent fuel pool. After installation, the seal is inflated to prevent contamination of the DSC exterior surfaces by waterborne particulates.

The structural materials and licensing requirements for the NUHOMS® transfer cask are delineated on the Appendix E drawings. In general, these requirements are in accordance with the applicable portions of the ASME Code, Section III, Division 1, Subsection NC for Class 2 vessels except that Subsection NCA does not apply. The cask is designated as an atmospheric pressure vessel and therefore a pressure test is not required. The cask is not N-stamped. The upper lifting trunnions and trunnion sleeves are conservatively designed in accordance with the ANSI N14.6 (4.9) stress allowable requirements for a non-redundant lifting device. All structural welds are ultrasonically examined or tested by the dye penetrant method as appropriate for the weld joint configuration. These stringent design and fabrication requirements ensure the structural integrity of the transfer cask and performance of its intended safety function.

4.3 Auxiliary Systems

The NUHOMS® ISFSI is a self-contained, passive storage facility which requires no auxiliary systems.

4.3.1 Ventilation Systems

Spent fuel confined in the NUHOMS® DSC is cooled by conduction and radiation within the DSC; and by conduction, convection and radiation from the DSC surface. Air inlets near the bottom of the HSM side walls and outlets near the HSM roof allow convective cooling by natural circulation. The driving force for this ventilation process is thermal buoyancy. The analysis of the HSM ventilation system is described in Section 8.1.3. No auxiliary ventilation is used or required at the ISFSI. Fuel loading and DSC closure operations take place in the plant's fuel/reactor building which utilize the existing ventilation system in that facility.

4.3.1.1 Off-Gas Systems

There are no off-gas systems required for a NUHOMS® ISFSI. Any off-gas systems required during the DSC drying and backfilling operations utilize existing plant systems.

4.3.2 Electrical Systems

No electrical systems are required for the HSM or DSC during storage conditions other than for lighting and security system power except for the HSM temperature monitoring. Nonessential electrical power is used during DSC closure operations and during DSC transfer operations to the HSM. The required electrical power in the fuel/reactor building is obtained from existing plant systems. Power at the ISFSI is generally supplied from a retail source.

4.3.3 Air Supply System

An air supply system may be used to force water from the DSC during closure operations.

4.3.4 Steam Supply and Distribution System

There are no steam systems utilized.

4.3.5 Water Supply System

The NUHOMS® system for loading of PWR fuel requires borated water for the DSC cavity compatible with the plant's existing fuel pool and technical specification limits. (Borated water may be supplied from the plant's spent fuel pool for this purpose.) Demineralized water or spent fuel pool water is used for the DSC cavity during loading of BWR fuel. Demineralized water is also needed for filling the DSC/cask annulus and for transfer cask and lifting yoke washdown operations. This water is supplied by existing plant systems.

4.3.6 Sewage Treatment System

There are no sewage treatment systems required for a NUHOMS® ISFSI.

4.3.7 Communications and Alarm System

No communication systems are required for the safe operation of a NUHOMS® ISFSI. The existing plant paging and telephone system is generally extended to the ISFSI for convenience during transfer operations. The ISFSI security alarm system is to be described in the ISFSI Security Plan prepared by the licensee.

4.3.8 Fire Protection System

No fire detection or suppression system is required for a NUHOMS® ISFSI. The HSM contains no combustible materials. The potential for fire hazards near the ISFSI should be addressed by the licensee. The provisions needed for fire response should be provided consistent with existing plant requirements.

4.3.9 Maintenance Systems

The NUHOMS® system is designed to be totally passive with minimal maintenance requirements. During fuel storage, the system requires only periodic inspection of the air inlets and outlets to ensure that no blockage has occurred.

The transfer cask is designed to require only minimal maintenance. Transfer cask maintenance is limited to periodic inspection of critical components and replacement of damaged or nonfunctioning components. A discussion of these requirements is provided in Section 4.5.

4.3.10 Cold Chemical Systems

There are no cold chemical systems for a NUHOMS® ISFSI.

4.3.11 Air Sampling System

No air sampling systems are required for a NUHOMS® ISFSI. Any airborne activity which may occur during fuel loading and DSC closure operations is monitored by the existing fuel/reactor building ventilation and radiological detection systems.

4.3.12 Instrumentation

As required by the specifications in Chapter 10, a 'Not Important to Safety' Temperature Monitoring System shall be installed on the HSM.

4.5 Transfer Cask and Lifting Hardware Repair and Maintenance

(for information only)

The transfer cask is designed to minimize maintenance and repair requirements. These operations may be performed at existing plant maintenance facilities or any suitable location since transfer cask contamination levels are maintained below transportable limits.

4.5.1 Routine Inspection

The following inspections should be performed prior to each use of the transfer cask and lifting hardware:

A. Visual inspection of the cask exterior for cracks, dents, gouges, tears, or damaged bearing surfaces. Particular attention should be paid to the cask trunnions and lifting yoke.

B. Visually inspect all threaded parts and bolts for burrs, chafing, distortion or other damage.

C. Check all quick-connect fittings to ensure their proper operation.

D. Visually inspect the interior surface of the cask for any indications of excessive wear to bearing surfaces.

E. Visual inspection of neutron shield jacket.

4.5.2 Annual Inspection

The following inspections and tests shall be performed on an annual basis:

A. Test the cask cavity quick-connect fittings and ram penetration seal for leak tightness.

B. Examine the cask trunnions and cask lifting yoke.

Any parts which fail these tests shall be repaired or replaced as appropriate.

Any indications of damage, failure to operate, or excessive wear should be evaluated to ensure that the safe operation of the cask is not impaired. Damage which impairs the ability of the cask to properly function should be repaired or replaced. This work may be performed on site, depending upon the capabilities of the site resources, or at an approved vendor's facility. Repairs should be performed in accordance with the manufacturer's or cask designer's recommendations.

4.7 Fuel Handling Operation Systems

Fuel handling for a NUHOMS® ISFSI is performed in two general locations. Individual fuel assemblies are loaded into the DSC in the plant's fuel/reactor building. Once confined in the DSC, the fuel is transported to the ISFSI and the DSC is inserted into the HSM. Fuel handling activities inside the fuel/reactor building are performed under the plant's 10CFR50 license. Fuel handling operations outside the fuel/reactor building are performed under the 10CFR72 license as described in this SAR. Fuel handling systems utilized in the fuel/reactor building include:

A. Cask handling crane

B. Spent fuel handling machine

C. Transfer cask and lifting devices

The fuel handling systems utilized outside the fuel/reactor building include the equipment required to transport the DSC to the HSM and insert the DSC into the HSM. These are the:

A. Transfer Cask

B. Transport Trailer and Skid

C. Skid Positioning System

D. Hydraulic Ram System

4.7.1 Structural Specifications

The cask handling crane and spent fuel handling machine are described in the plant's 10CFR50 SAR. The codes and standards for the transfer cask and transfer equipment are described in Section 4.7.4.

4.7.2 Installation Layout

The layout of the fuel/reactor building is shown in the plant's 10CFR50 SAR. The layout of a NUHOMS® ISFSI is discussed in Section 4.1. General layout criteria for the ISFSI site (such as fence location, distance to site boundary, distance to personnel, work areas, etc.) which have radiological dose impact are to be addressed by the licensee.

4.7.2.1 Building Plans

Plans for a typical NUHOMS® ISFSI are provided in Figures 1.3-11 through 1.3-13. The building plans for an individual plant ISFSI are site specific and are to be prepared by the licensee in accordance with industry codes and standards.

4.7.2.2 Building Sections

Sections for a typical NUHOMS® ISFSI are provided in Appendix E. The building plans for an individual plant ISFSI are site specific and are to be prepared by the licensee in accordance with industry codes and standards.

4.7.2.3 Confinement Features

The confinement features of the NUHOMS® system are described in Section 3.3.2.

4.7.3 Individual Unit Descriptions

4.7.3.1 Fuel/Reactor Building Equipment

The cask handling crane is used for all DSC and transfer cask movements within the fuel/reactor building. The spent fuel handling machine is used to load spent fuel assemblies into the DSC.

Records of the SFAs which are candidates for dry storage are to be reviewed to ensure conformance with the required fuel characteristics delineated in Chapter 10, and to ensure mechanical and structural integrity prior to placement in the DSC. If plant records indicate that the structural integrity of the fuel assemblies is adequate, inspection of the fuel assembly may not be required. The fuel assembly identification number must always be visible and recorded prior to placement into the DSC in order to maintain fuel accountability.

The SFAs are placed into the DSC while the DSC is resting in the cask cavity in the spent fuel pool. The general layout of the spent fuel pool area is shown in the plant's 10CFR50 SAR. Each time a DSC containing spent fuel is moved or handled, the DSC resides inside the cavity of the transfer cask.

Prior to placement of the DSC into the fuel pool, the top shield plug is rigged for fit-up with the DSC shell as follows:

A. The shield plug is rigged and placed on the DSC to recheck proper fit-up with the DSC shell assembly. During the fit-up operation the shield plug lifting cables, attached to the cask lifting yoke, may require adjustment or tensioning to ensure that the plug fits squarely into the DSC shell assembly when suspended from its rigging. Once the rigging has been adjusted, the plug should fit true in subsequent lift and placement operations in the pool.

B. At many plants, the cask decontamination area and fuel pool are not in the same area/building. By moving the shield plug and DSC/transfer cask in one movement, the need for a number of crane movements is minimized and the fuel loading process is expedited. In addition, at some plants, because of space limitations in the areas surrounding the fuel pool, the cask lid or shield plug and cask yoke may be left in the pool during the fuel loading process.

Placement of the top shield plug into the DSC in the fuel pool following completion of the fuel loading is performed in gradual movements to ensure that misalignment or damage to components does not occur. Because of the extremely slow speed of the crane hoist during shield plug placement, the water flow rate out of the cask is not excessive. A gap exists between the top shield plug and DSC shell which permits unrestricted flow of the displaced water out of the DSC. The vent and siphon ports may be left open for this operation, although it is not necessary.

With reference to the generic operating procedures outlines in Chapter 5, the following description is provided to illustrate how the top shield plug installation operation can be accomplished. Detailed operating procedures are to be developed by the licensee on a site specific basis.

After the spent fuel assemblies have been placed into the DSC, install the shield plug as follows:

A. Position the shield plug over the DSC so that the shield plug aligns with the DSC. Tag lines may be used to assist in precise positioning. An underwater viewing box or CCTV cameras may be used to verify correct installation.

B. Lower the crane hook until the shield plug is seated on the DSC and sufficient slack exists in the lifting cables to permit attachment of the yoke to the cask.

C. During placement of the shield plug, the following observations should be made to ascertain that the shield plug is seated properly:

   1. Observe the shield plug and DSC to ensure that the shield plug is seated with the DSC shell uniformly.

2. Ascertain that all shield plug lifting cables slacken simultaneously.

3. After shield plug placement, an underwater television camera, periscope, or other method may be used to inspect the height of the DSC shell above the shield plug to make sure that it is uniform and that the DSC drain and fill port is flush with the shield plug.

D. Corrective action which may be taken if the top shield plug is cocked:

1. Slowly raise the shield plug from the DSC. When it clears the DSC shell, laterally move the crane trolley toward the low side of the cocked shield plug.

2. Re-seat the shield plug and inspect for correct placement. Repeat this operation if necessary, making slight lateral adjustments to the crane trolley.

3. If this fails, it may be necessary to adjust the shield plug rigging. This is accomplished by bringing the shield plug out of the pool and placing it on a stand or the floor. Adjust the length of the cables as necessary.

During the draining and drying operation, the water in the DSC cavity is removed by supplying compressed air, nitrogen or helium through the vent port, forcing water out through the siphon port. The inlets to the siphon and vent ports have quick release connections (Figure 4.7-1)). The quick-release connections remain closed unless a connection is made. These quick-release valves insure that no accidental release of radioactive material occurs through the siphon or vent ports.

The basic configuration for both the siphon and vent ports used during the drying process consists of a hose with a valve on each end and a quick release connection to the DSC. One of the valves is connected to the siphon or vent port. This valve is designated as Valve No. 1 of the draining and drying system (see Figure 4.7-1). The valve at the other end of the hose is designated as Valve No. 2 of the draining and drying system. All auxiliary equipment and radioactive waste systems are connected to Valve No. 2. The type or method of connection is dependent on the equipment used at the plant and will be selected by the licensee.

Valve No. 1 for both the vent and the siphon ports remains open during most of the drying operation. The flow is regulated with Valve No. 2. Valve No. 1 acts as a redundant valve and is only used if Valve No. 2 should fail or a leak in the hose should develop. By using Valve No. 2 as the flow regulator as well as the connection point between the auxiliary system and the DSC, the amount of time which personnel are exposed to radiation is minimized. Once the connection between Valve No. 1 and the siphon or vent tube is made,

additional shielding may be placed over the shield plug to further reduce personnel radiation exposure

All discharges from the DSC cavity, whether gas or water, are routed to the plant's existing radioactive waste system or spent fuel pool. Water from the DSC cavity may be routed back to the plant's fuel pool as appropriate. Therefore, all radioactive materials or particles are confined within a closed controlled system.

Once all the water has been forced out of the DSC cavity with compressed air, nitrogen or helium, the remaining moisture contained within the cavity is removed with a vacuum drying system. The vacuum drying system evacuates the DSC cavity and lowers the moisture content to an acceptable level.

The suction line of the vacuum drying system is connected to the DSC vent and siphon ports. A hose is connected from the discharge outlet of the vacuum drying system to the plant's radioactive waste system or spent fuel pool. A particle filter is located on the suction side of the vacuum drying system. The filter is used to capture any radioactive particles that may be entrained within the gas thereby preventing contamination of the vacuum drying system. A drain in the vacuum suction line allows any liquid water remaining in the DSC cavity to be routed directly to the plant's radioactive waste system or spent fuel pool. The vacuum drying system is completely closed so that all radioactive material is confined within a controlled system.

During the drying and final sealing operations of the DSC, the inner seal weld confines any radioactive particles in the DSC cavity. The pressure boundary is formed by welding the inner top cover plate to the DSC shell using remote automatic welding equipment (see Figure 4.7-2). The vent port remains open and vented at atmosphere pressure to the plant's radwaste system during welding of the inner top cover plate. Fabricated plugs are placed over the siphon and vent port openings and welded into place. Once the DSC has been dried and backfilled with helium, the outer top cover plate is lowered onto the DSC. Again, using remote automatic welding equipment, the outer top cover plate is welded in place. These welded joints act as barriers for confining all radioactive material within the DSC throughout the service life of the DSC.

The canister Automatic Welding System consists of two major components, the welding machine itself as shown in Figure 4.7-2, and the control panel/power supply which is not shown. The control panel and power supply, along with the purge gas bottle, can be located at any convenient position for the operator within the range of the umbilical cables, usually about 50 feet. The use of an automatic welding machine is considered essential for ALARA operations in routine use. Manual welding of any of the closure welds is permissible, but is recommended only for purposes of weld repair or as a recovery procedure if the machine becomes non-operational during the closure process. Small weldments such as the vent and siphon port plug seals may be made manually as

part of routine operations because of the short stay time required for the small weld volume.

4.7.3.2 Transfer Cask

The transfer cask is a cylindrical vessel with a bottom end closure assembly and a bolted top cover plate as shown in Figure 1.3-6. The cask's cylindrical walls are formed from three concentric steel shells with lead poured between the inner liner and the structural shell to provide gamma shielding during DSC transfer operations. The outer shell forms an annular vessel with a neutron absorbing material placed between the structural shell and outer shell to provide neutron shielding during DSC transfer operations.

The cask bottom end assembly is welded to the cylindrical shell assembly and includes two closure assemblies for the ram grapple access penetration. A water tight bolted cover plate is used for transfer operation within the plant's fuel/reactor building. The bolted ram access penetration cover plate assembly may be replaced by a two piece neutron shield plug assembly for transport operations from the plant's fuel/reactor building to the ISFSI as shown in Figure 4.2-14. Transport trailers with an integral ram will not utilize a shield plug assembly. At the ISFSI site, the inner shield plug of the neutron shield plug assembly is removed to provide access for the ram and grapple to push the DSC into the HSM.

The top cover plate is bolted to the top flange of the cask during transport from the plant's fuel/reactor building to the ISFSI. The top cover plate assembly consists of a thick structural plate with a thin shell encapsulating solid neutron shielding material. Two upper lifting trunnions are located near the top of the cask for downending/uprighting and lifting of the cask in the fuel/reactor building. Two lower trunnions, located near the base of the cask, serve as the axis of rotation during downending/uprighting operations and as supports during transport to the ISFSI.

The material selected for use as a solid neutron shield material is a cementitious shop castable, fire resistant material with a high hydrogen content which is designed for use in shielding doors, hatches, plugs, and other nuclear applications. The solid neutron shielding material used in the cask outer annular cavity, top and bottom covers, produces water vapor and a small quantity of non-condensible gases when heated above 212°F. The off-gassing produces an internal pressure which increases with temperature. As the temperature is reduced, the off-gas products are reabsorbed into the matrix, and the pressure returns to atmospheric. The maximum steady state temperature of the material is calculated conservatively for an extreme ambient day with a design basis decay heat load. This temperature, assumed to exist throughout the entire shield, results in an internal cavity pressure. This pressure is well within the design allowable value for the neutron shield cavity. The release of off-gas products (water vapor) does not affect the predicted neutron doses since the hydrogen content assumed in the shielding analysis is conservative. This is exceeded by the manufacturer's guaranteed minimum hydrogen content and actual test sample values of as-delivered product.

The material selected for the liquid neutron shield material is water with or without antifreeze agents.

Although the loss of the neutron shield is highly unlikely, the loss of neutron shield accident case is analyzed in Section 8.2.5.3. The transfer cask is designed to provide adequate shielding to maintain the maximum radiation surface dose to less than 5 R/hr combined gamma and neutron for a cask drop accident event assuming a complete loss of neutron shielding.

The transfer cask is designated important to safety since it provides biological shielding and structural protection for the DSC from impact loads. The codes and standards used to design and fabricate the transport cask are presented in Section 4.7.4.

4.7.3.3 Transfer Cask Lifting Yoke

The lifting yoke is a special lifting device which provides the means for performing all cask handling operations within the plant's fuel/reactor building. It is designed to support a loaded transfer cask. A lifting pin connects the fuel/reactor building cask handling crane hook and the lifting yoke. The lifting yoke is shown in Figure 4.2-15.

The lifting yoke is a passive, open hook design with two parallel lifting beams fabricated from thick, high-strength carbon steel plate material, with a decontaminable coating. It is designed to be compatible with the fuel/reactor building crane hook and load block. The lifting yoke engages the outer shoulder of the transfer cask lifting trunnions. To facilitate ease of shipment and maintenance, all yoke subcomponent structural connections are bolted.

The lifting yoke is designated "safety related" since it is in the direct load path of the cask. The codes and standards used to design and fabricate the lifting yoke are presented in Section 4.7.4.

4.7.3.4 Transport Trailer

The transport trailer is designed for use with the NUHOMS® transfer equipment. Its function is to move the cask and cask support skid from the fuel/reactor building to the ISFSI location. Once there, the trailer is raised and remains passive during the transfer for the DSC into the HSM.

The trailer is a commercial grade item of the type commonly used to haul very heavy loads such as transformers, boilers, and construction equipment. An illustration of the trailer is shown in Figure 4.7-3. The codes and standards governing the design and construction of the trailer are provided in Section 4.7.4.

The loading sequence for the cask is shown in Figure 4.7-4 where it is illustrated that the cask is never lifted above the maximum drop height of 80 inches after it is loaded onto the cask support skid. The transport trailer and other transfer equipment is shown in its configuration at the HSM in Figure 1.1-2. The trailer itself is considered not important to safety since its failure would not result in a cask drop exceeding the cases evaluated in Chapter 8.

The trailer is typically configured as a 4x2 dolly. Eight hydraulic suspensions carry four pneumatic tires each and are located in four axle lines. Hydraulic suspensions enable coupled steering of all axles around a common point, thus minimizing tire scuffing and the resulting damage to pavement and tires. The suspensions also allow other advantages, such as adjustable deck height, in-situ lockout or repair of failed suspensions or tires, and automatic compensation for road surface irregularities. The trailer has multi-wheel braking using industrial grade air/spring brakes. The brakes automatically lock on loss of air pressure from the tractor.

4.7.3.5 Skid Positioning System

The functions of the skid positioning system (SPS) are to hold the cask support skid stationary (with respect to the transport trailer) during cask loading and transport, and to provide alignment between the transfer cask and the HSM prior to insertion or withdrawal of the DSC. It is composed of tie down or travel lock brackets and bolts, three hydraulically powered horizontal positioning modules, four hydraulic lifting jacks, and a hydraulic supply and control skid. The SPS hardware which is located on the transport trailer is illustrated in Figure 4.7-5.

The codes and standards governing the design and construction of the SPS are provided in Section 4.7.4. The SPS is considered not important to safety since its failure would not result in a cask drop as severe as the cases evaluated in Chapter 8.

The skid tie down brackets are shown in Figure 4.7-6. The brackets are designed to withstand the design basis loads for the skid which are described in Chapter 8.

The hydraulic jacks are designed to support the loaded cask, skid, and trailer and the loads applied to them during HSM loading and unloading. They are utilized at two locations: in the fuel/reactor building during cask downending, and at the ISFSI during cask alignment and DSC transfer. At both locations, their purpose is to provide a solid support for the trailer frame and skid. Three measures are taken to avoid accidental lowering of the trailer payload: the hydraulic pump is de-energized after the skid has been aligned (the jacks are also hydraulically locked out during operation of the horizontal cylinders); there are mechanical locking collars on the cylinders; and pilot-operated check valves are located on each jack assembly to prevent fluid loss in the event of a broken hydraulic line.

Three hydraulic positioning modules provide the motive force to horizontally align the skid and cask with the HSM prior to insertion or retrieval of the DSC. The positioning modules controls are manually operated and hydraulically powered. The system is designed to provide the capability to align the cask to within the specified alignment tolerance.

Anti-friction pads constructed from woven teflon pads and steel are used to reduce the force required to align the cask. These pads are commonly used as bearings for bridges, tank supports, and hydro/electric gates. Four pads are mounted to the trailer frame. Steel bearing plates mounted on the bottom of the skid longitudinal beams slide on the teflon surfaces and protect them from the weather. The travel of the skid is restricted by the stroke of the hydraulic positioning cylinders. In the event of cylinder failure, travel stops surrounding the bearing plates prevent the skid from excessive travel.

The hydraulic power supply and controls for the SPS may be included as a part of the transfer trailer hydraulics or, as an option, can be located on a separate skid. The hydraulic pump is powered by an electric motor. Directional metering valves are used to allow precise control of cylinder motions. The SPS is manually operated and has three operational modes: simultaneous actuation of the four vertical jacks or any pair of jacks, actuation of any single vertical jack, or actuation of any one of the three horizontal actuators. Simultaneous operation of the vertical jacks and the horizontal actuators is not possible. Fourteen small hydraulic quick connect lines provide power to the seven SPS hydraulic cylinders.

4.7.3.6 Hydraulic Ram System

The Hydraulic Ram System (HRS) provides the motive force for transferring the DSC between the HSM and the transfer cask. Since operation of the HRS cannot result in damage to the fuel inside the DSC, it is considered not important to safety. The HRS is illustrated in Figure 1.3-9. The codes and standards used in design of the HRS are listed in Section 4.7.4.

The HRS includes the following main subcomponents: one double-acting hydraulic cylinder; one grapple assembly; one hydraulic power unit; hydraulic hoses and fittings; one hose reel; and all necessary appurtenances, pressure limiting devices and controls for the system operation.

The HRS is designed to grapple, push or pull the DSC at any point in the extent of its horizontal travel between the cask and the HSM. The HRS and all other components of the transfer system are conservatively designed for and can apply pushing and pulling forces of up to 80,000 pounds, if necessary to complete the transfer.

The ram hydraulic cylinder is provided with a support and alignment system which provides for the range of vertical and lateral motion necessary for alignment with the DSC, cask and HSM.

The ram hydraulic power unit and controls are designed to provide the range of flows and pressures as required to push or pull the DSC under normal to maximum load conditions at safe design speeds. All controls are mounted in one control panel. Features are included in the control system to prevent the inadvertent operation of the HRS, limit the speed and force of the ram cylinder, as well as to provide an emergency means of stopping the ram motion.

The equipment safety concerns are addressed using a relatively simple control system and comprehensive operational procedure. All controls are manually operated. Pre-set pressure and flow control devices ensure that the maximum design forces and speeds of the hydraulic ram are not exceeded. System pressure gauges are provided to monitor the insertion operation and to verify that design force limits are not exceeded.

4.7.3.7 Ram Support Assembly

The ram hydraulic cylinder may be permanently mounted on the cask transfer trailer using a steel support assembly, or it may be installed on an adjustable tripod as shown in Figure 1.3-9 and attached to the cask by a steel support frame. In either case, the hydraulic ram push/pull loads are transmitted through the support assembly to the transfer cask, through the cask to the cask restraints and into the HSM front wall embedments.

4.7.3.8 Cask Support Skid

The cask support skid is a structural steel frame fabricated from standard wide flange members, built up box beam cross members and trunnion support towers. The cask support skid, shown in Figure 1.3-8, is designed according to the AISC code for its operating loads. During cask loading and trailer towing operations, the cask support skid is rigidly attached to the transfer trailer by four bolted brackets. During cask alignment, the bolts are removed, and the alignment system is used to move the cask support skid into position. For this operation, the skid is supported by the skid positioning system bearing pads located on the trailer frame cross members. The transfer cask is supported on the front and rear trunnion support tower pillow blocks. For cask downending, the lower trunnions are engaged into the front pillow blocks, and the top section of the blocks installed. The cask lifting yoke and fuel/reactor building crane are then used to lower the upper trunnions into the rear trunnion supports. The yoke is then removed and the upper trunnion capture plates are installed.

4.7.4 Transfer Equipment

Applicable sections of the following codes and standards are specified for the design, construction, and testing of the NUHOMS® ISFSI transfer equipment components.

4.7.4.1 Transfer Cask and Lifting Yoke

A. ASME Boiler and Pressure Vessel Code. Section III. Division 1. Subsection NC. "Class 2 Components". 1983 Edition through Winter 1985 Addenda. used as a guide for design and fabrication.

B. ASME Boiler and Pressure Vessel Code. Section III. Division 1. Appendices.

C. ANSI N14.6 - 1993. "Special Lifting Devices for Shipping Containers Weighing 10.000 lbs. or more."

D. ANSI Y14.5 - 1982. "Dimensioning and Tolerancing."

E. ANSI 57.9 - 1984, "Design Criteria for an Independent Spent Fuel Storage Installation (Dry Storage Type)."

F. ANSI N45.2 - 1977, "Quality Assurance Requirements for Nuclear Power Plants."

G. AWS D1.1-88. "Structural Welding Code - Steel."

H. Steel Structures Painting Council (Standards).

I. EPRI NP-4830, "Comparison of Pad Hardness Study with Drop Test Results."

J. Crane Manufacturers' Association of America (CMAA) Specification No. 70-1983, "Specifications for Electric Overhead Traveling Cranes."

4.7.4.2 Transfer System Equipment

A. American Institute of Steel Construction. "Manual of Steel Construction."

B. National Electrical Code.

C. National Fluid Power Association (Standards).

D. National Electrical Manufacturer's Association (Standards).

E. American Society for Testing and Materials (Standards).

F. Steel Structures Painting Council (Standards).

G. American National Standards Institute (Standards).

H. American Welding Society, AWS D1.1, "Structural Welding Code-Steel."

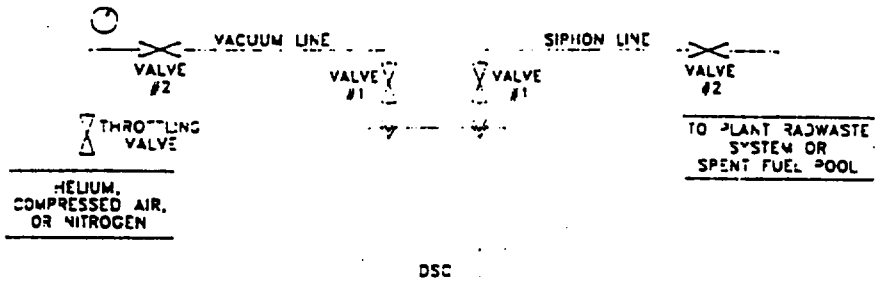

CONFIGURATION FOR
DSC DRAINING

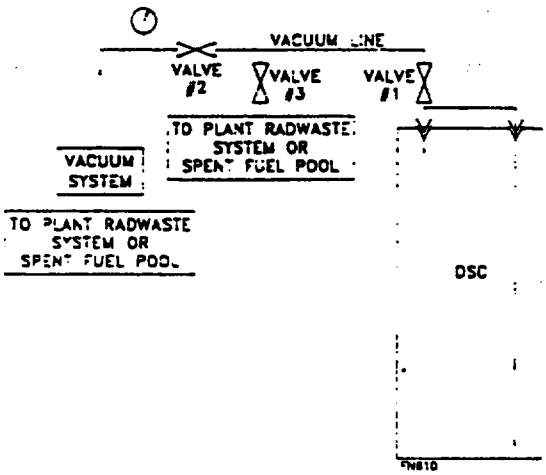

CONFIGURATION FOR
DSC VACUUM DRYING

Figure 4.7-1
Typical DSC Draining and Drying System

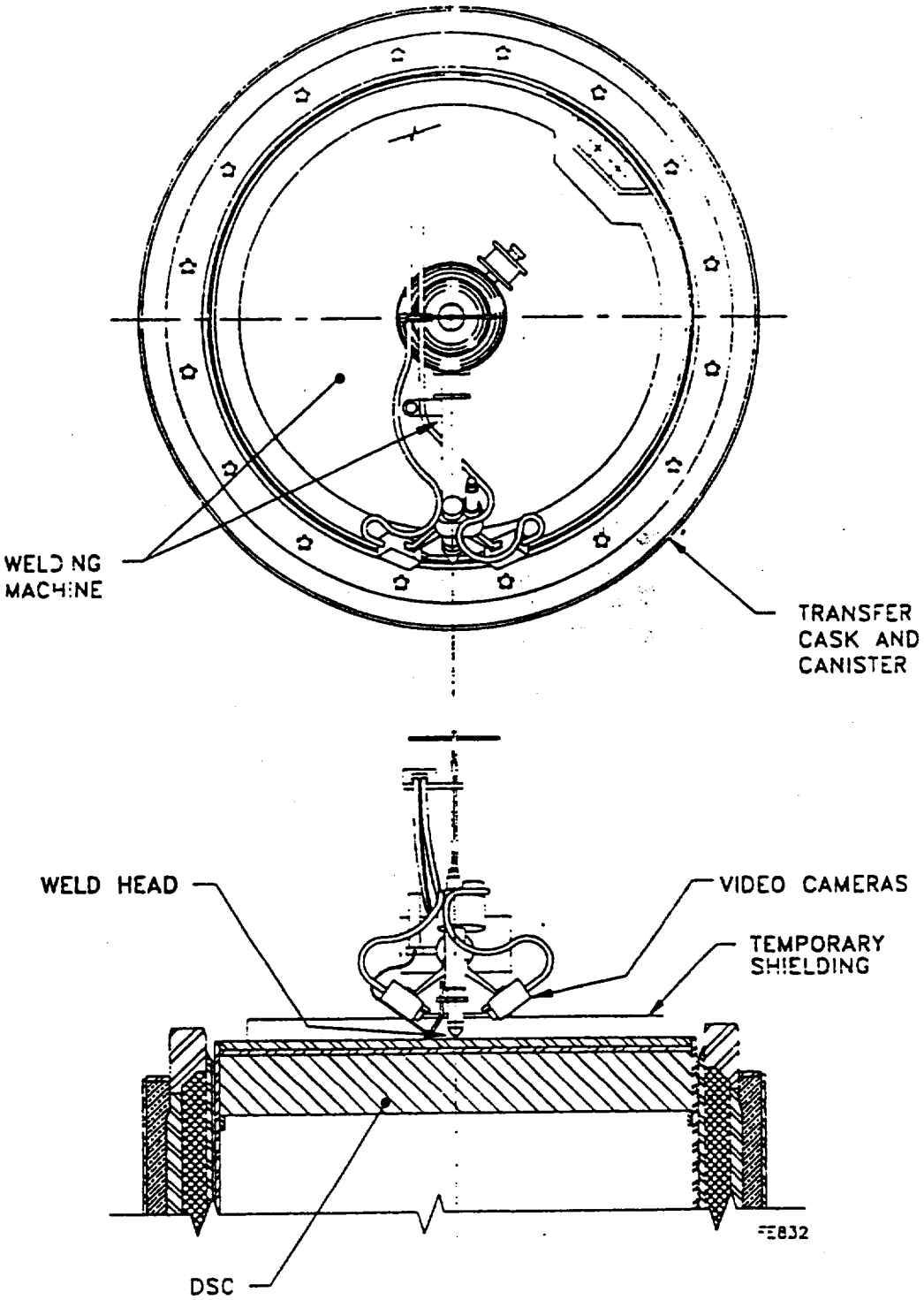

Figure 4.7-2
DSC Automatic Welding System

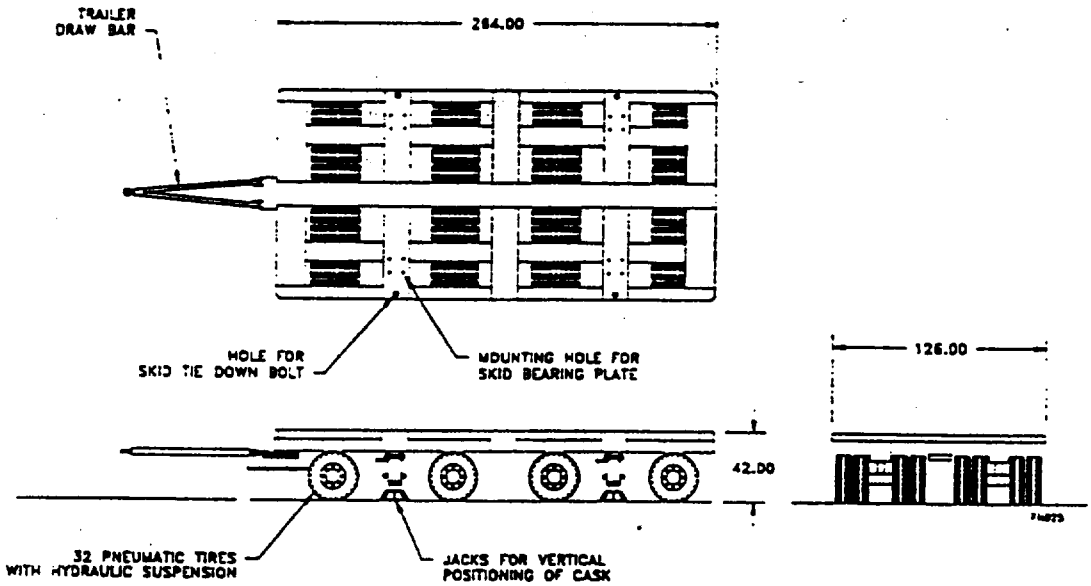

Figure 4.7-3
Typical NUHOMS® Transport Trailer

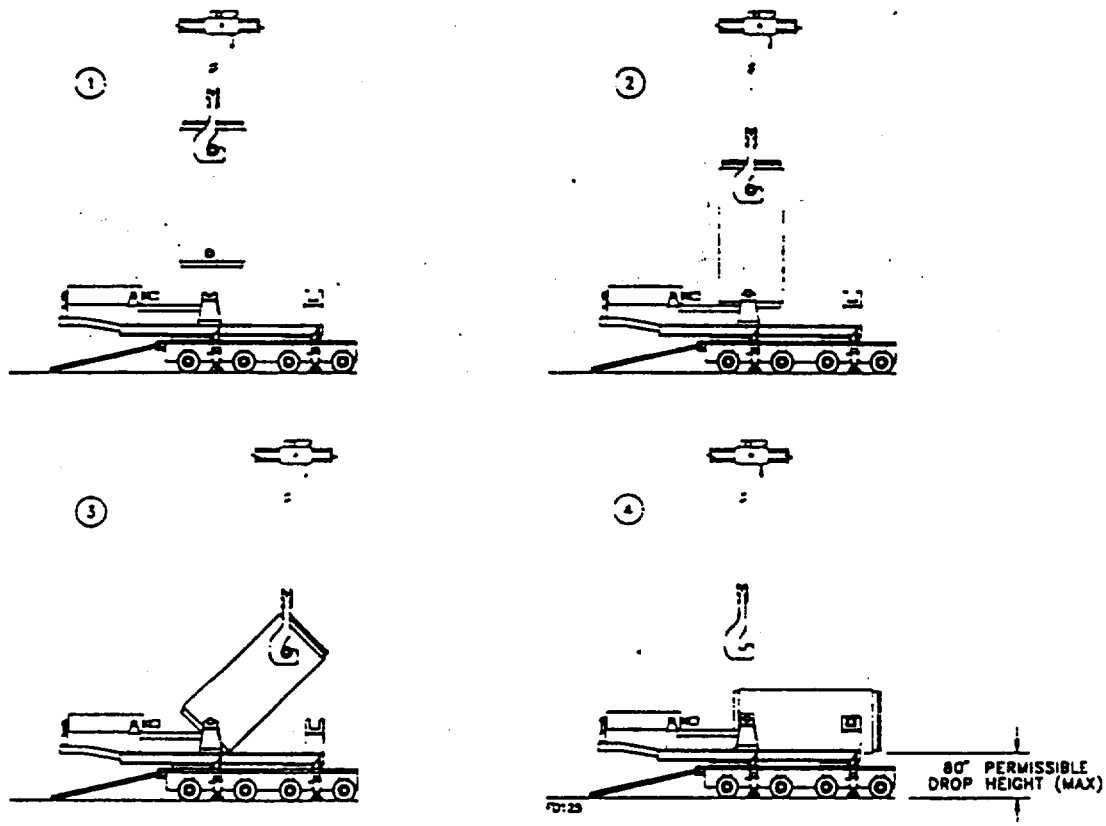

Figure 4.7-4
NUHOMS® Transport Cask Downending Sequence

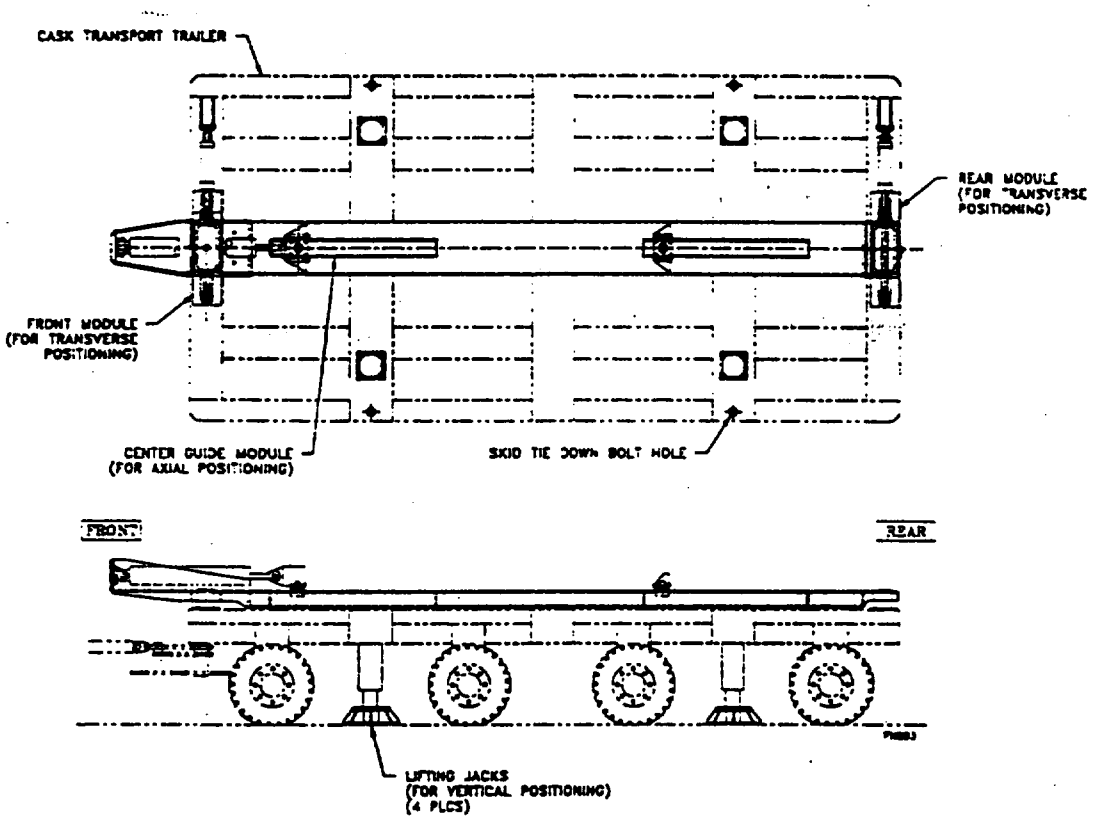

Figure 4.7-5
NUHOMS® Skid Positioning System (SPS)

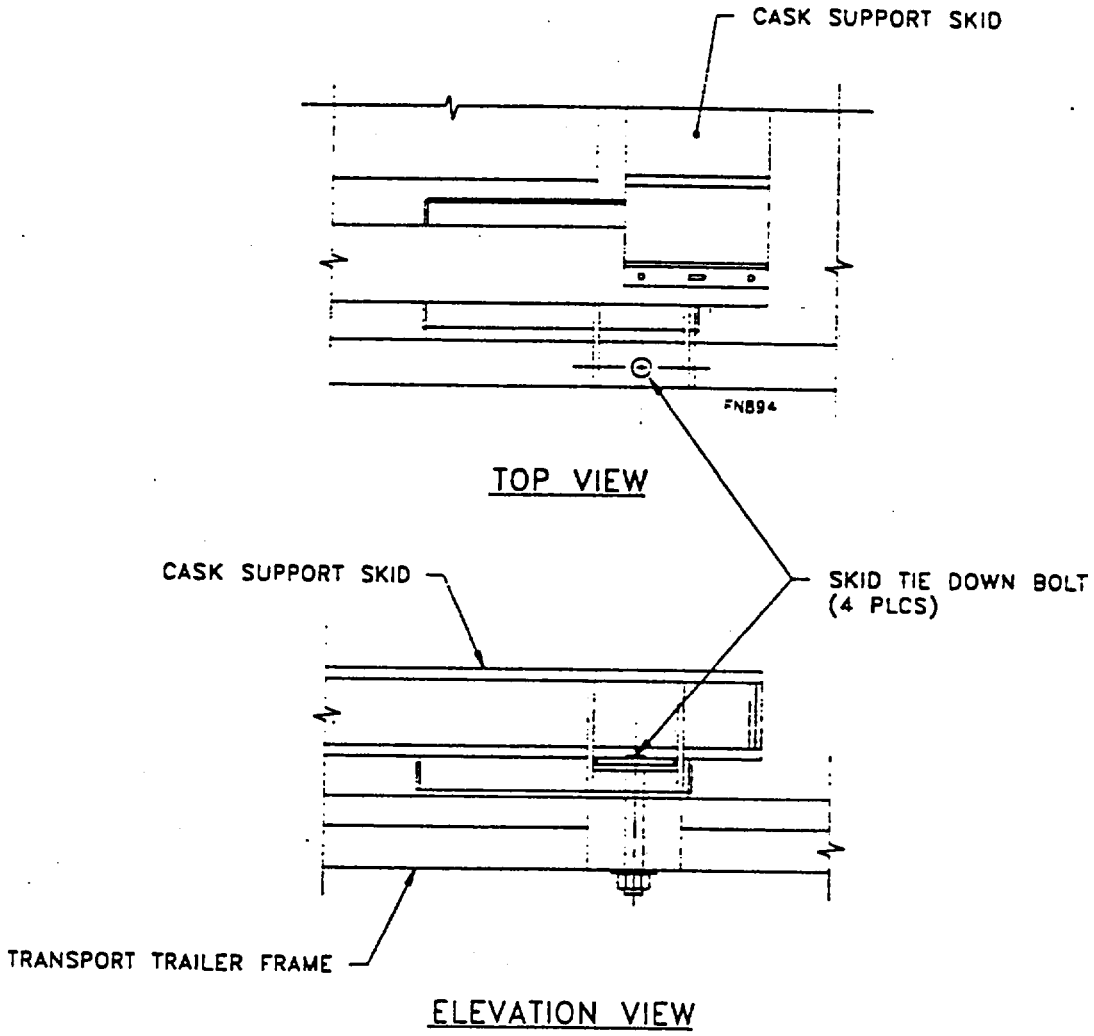

Figure 4.7-6
NUHOMS® Cask Support Skid Tie-Down Bracket

7.2 Radiation Sources

7.2.1 Characterization of Sources

This section describes the design basis radiation source strengths and source geometries used for the standardized NUHOMS® system shielding design calculations.

The neutron and gamma radiation sources include the design basis PWR and BWR spent fuel, activated portions of the fuel assembly, and secondary gammas. All sources, except secondary gammas, are considered physically bound in the source region. Secondary gammas are produced by neutrons passing through shielding regions.

The design basis PWR spent fuel for the NUHOMS®-24P system has been subjected to an average fuel burnup of 40,000 MWD/MTU. The maximum initial enrichment is 4.0 weight percent U-235 and a post-irradiation cooling time equivalent to five years is assumed. Similarly, the design basis BWR spent fuel for the NUHOMS®-52B system has been subjected to an average fuel burnup of 35,000 MWD/MTU with a maximum initial enrichment of 4.0 weight percent U-235 and a cooling time of five years. Spent fuel assemblies which meet these criteria are bounded by the source strengths used in this analysis.

Neutron sources are based on spontaneous fission contributions from six nuclides (predominantly Cm-242, Cm-244, and Cm-246 isotopes), and (α,n) reactions due almost entirely to eight alpha emitters, (predominantly Pu-238, Cm-242, and Cm-244). The fission spectrum used in shielding calculations is a weighted combination of the principal contributors. The total neutron source strength for PWR fuel is 2.23E8 neutrons per second per assembly. Similarly, the total neutron source strength for BWR fuel is 1.01E8 neutrons per second per fuel assembly. The neutron energy spectrum and flux-to-dose conversion factors are presented in Table 7.2-1 and Table 7.2-2.

Gamma radiation sources include 70 principal fission product nuclides within the spent fuel, and several activation products and actinide elements present in the spent fuel and fuel assemblies. The gamma energy spectrum includes contributions from each source isotope as determined by ORIGEN calculations for the design basis spent fuel. The total gamma source strength for PWR fuel is 5.81E15 MeV/s/MTHM. Similarly the total gamma source strength for BWR fuel is 4.86E15 MeV/s/MTHM. The gamma energy spectrum and flux-to-dose conversion factors are presented in Table 7.2-3 and Table 7.2-4. The gamma source due to control components, which represents less than 10% of the fuel source, is addressed in Appendix H.

The source geometries for neutron shielding calculations are either cylindrical or slab, depending on whether neutron dose rates are required in the radial or axial direction around the DSC, respec-tively. Section 7.3.2 contains detailed descriptions of the neutron source model geometries.

The gamma shielding calculations are based on cylindrical source models. A source mesh is defined for each shielding model with increasingly finer mesh spacing near detectors. Symmetry is taken advantage of wherever possible to facilitate the use of more mesh points. Section 7.3.2 further describes the gamma source models.

7.2.2 Airborne Radioactive Material Sources

The release of airborne radioactive material is addressed for three phases of system operation: fuel handling in the spent fuel pool, drying and sealing of the DSC, and DSC transfer and storage. Potential airborne releases from irradiated fuel assemblies in the spent fuel pool are discussed in the plant's existing 10CFR50 license.

DSC drying and sealing operations are performed using procedures which prohibit airborne leakage. During these operations, all vent lines are routed to the plant's existing radwaste systems. Once the DSC is dried and sealed, there are no design basis accidents which could result in a breach of the DSC and the airborne release of radioactivity. Design provisions to preclude the release of gaseous fission products as a result of accident conditions are discussed in Section 8.2.8.

During transfer of the sealed DSC and subsequent storage in the HSM, the only postulated mechanism for the release of airborne radioactive material is the dispersion of non-fixed surface contamination on the DSC exterior. By filling the cask/DSC annulus with demineralized water, placing an inflatable seal over the annulus, and utilizing procedures which require examination of the annulus surfaces for smearable contamination, the contamination limits on the DSC can be kept below the permissible level for off-site shipments of fuel. Therefore, there is no possibility of significant radionuclide release from the DSC exterior surface during transfer or storage.

7.3 Radiation Protection Design Features

7.3.1 Installation Design Features

The design considerations listed in Section 7.1.2 ensure that occupational exposures to radiation are ALARA and that a high degree of integrity is achieved through the confinement of radioactive materials inside the DSC. Applicable portions of Regulatory Position 2 of Regulatory Guide 8.8 (7.5) have been used as guidance.

A. Access control to radiation areas should utilize the licensee's existing plant procedures.

B. Radiation shielding substantially reduces the exposure of personnel during system operations and storage.

C. The NUHOMS® system is a passive storage system; no process instrumentation or controls are necessary during storage. The only required instrumentation is the HSM temperature monitoring required by the Certificate conditions of use.

D. Airborne contaminants and gaseous radiation sources are confined by the high integrity double seal welded DSC assembly.

E. No crud is produced by the NUHOMS® system.

F. The necessity for decontamination is reduced by maintaining the cleanliness of the DSC and transfer cask during fuel loading and unloading operations (see Section 5.1); the DSC and transfer cask surfaces are smooth, nonporous, and are generally free of crevices, cracks, and sharp corners.

G. No radiation monitoring system is required during storage.

H. No resin or sludge is produced by the NUHOMS® system.

The NUHOMS® system is a passive storage system which uses ambient air for decay heat removal. Each HSM is capable of providing sufficient ventilation and natural circulation to assure adequate cooling of the DSC and its contents so that fuel cladding integrity is maintained. The convective cooling system is completely passive and requires no filtration system.

7.3.2 Shielding

7.3.2.1 Radiation Shielding Design Features

Radiation shielding is an integral part of both the DSC and HSM designs. The features described in this section assure that doses to personnel and the public are ALARA.

The DSC is a cylindrical pressure vessel constructed from stainless steel with carbon steel internals. Details of the DSC and relevant dimensions can be found in Chapter 4 and on the drawings in Appendix E. A thick steel or composite lead/steel plug and two stainless steel cover plates provide axial shielding at each end of the DSC. During DSC handling operations, additional shielding is provided by the on-site transfer cask.

Two small penetrations in the top shield plug provide a means for draining water, vacuum drying and helium backfilling the DSC. The penetrations are located on the perimeter of the DSC away from fuel assemblies and contain sharp bends to minimize radiation streaming. Appendix A shows the relevant dimensions of the shielding materials located at the top and bottom ends of the DSC. Figure 1.3-1 shows the physical arrangements of the DSC shield plug assemblies.

The HSM provides substantial shielding during storage of the DSC. Details of the HSM and relevant dimensions can be found in Chapter 4 and on the drawings in Appendix E. Thick reinforced concrete walls and a roof slab provide neutron and gamma shielding. The HSM's access opening is covered by a thick composite door including a heavy steel plate with a concrete core.

Penetrations in the HSM allow convective air cooling of the DSC and HSM internals. The inlet vents located in the lower side walls of the HSM draw air into the HSM. The HSM outlet vents are located in the upper side walls of the HSM. There are no penetrations or openings in occupiable areas surrounding the HSM. The features of the HSM design are illustrated in Figure 1.3-4.

The on-site transfer cask is a cylindrical shielded vessel constructed from steel and various shielding materials. Details of the transfer cask and relevant dimensions can be found on the drawings in Appendix E. Radial gamma shielding is principally provided by a stainless steel inner liner, a lead shield, and a carbon or stainless steel structural shell. Neutron shielding in the radial direction is provided by an outer metal jacket which forms an annulus with the cask structural shell. The annulus is filled with a neutron absorbing material to provide neutron dose attenuation. The steel transfer cask top and bottom cover plates with integral solid neutron shielding material provide additional shielding in

the axial direction to that of the DSC shield plugs. Figure 1.3-6 shows the physical arrangement of the transfer cask top and bottom end assembly.

Additional portable shielding during DSC handling, transport and transfer operations may be utilized by the licensee, if desired. Section 7.4 conservatively provides an assessment of design basis on-site doses without the use of portable shielding.

7.3.2.2 Shielding Analysis

This section describes the radiation shielding analytical methods and assumptions used in calculating NUHOMS® system dose rates during the handling and storage operations. The dose rates of interest are calculated at the locations listed in Table 7.3-2 for 5 year cooled design basis PWR fuel. Table 7.3-3 shows the dose rates for 10 year cooled PWR fuel which are included for information only. Figure 7.3-3 shows these locations on the HSM, DSC and transfer cask. The computer codes used for analysis are described below, each with a brief description of the input parameters generic to its use. Descriptions of the individual analytical models used in the analysis are also provided. Consistent with the relative design basis source strengths, the shielding analysis results for the NUHOMS®-24P envelop those of the NUHOMS®-52B systems.

A. Computer Codes ANISN (7.1), a one-dimensional, discrete ordinates transport computer code, is used to obtain neutron and gamma dose rates at the outer HSM walls, and at the outside surface of the loaded transfer cask in the radial direction. ANISN is also used to obtain the axial neutron dose rates at the shield plugs of the DSC, the transfer cask, and outside the HSM access door. The CASK cross section library, which contains 22 neutron energy groups and 18 gamma energy groups, is applied in an S_8P_3 approximation for cylindrical or an $S_{16}P_3$ approximation for slab geometry, respectively (7.7). Calculated radiation fluxes are multiplied by flux-to-dose conversion factors (Table 7.2-1, Table 7.2-2, Table 7.2-3,and Table 7.2-4) to obtain final dose rates. The ANISN calculations use the coupled neutron and gamma libraries. Therefore, dose rates from both primary and secondary gammas are calculated in each run.

QAD-CGGP (7.2), a three-dimensional point-kernel code, is used for the axial gamma shielding analysis of the HSM access door, the DSC and cask end assemblies, the DSC-cask annular gap, and the HSM air vent penetrations. Mass attenuation and buildup factors are obtained from QAD-CGGP's internal library. The gamma energy spectrum is taken directly from ORIGEN.

Since QAD-CGGP calculates dose rates from primary gammas only, the primary gamma source strength in the active fuel region is increased for calculations in the axial direction of the DSC. This is done as a way to include the dose rate effect due to secondary

gammas primarily generated in the shield plug material of the DSC and additional activation products located in the fuel assembly end fittings. Previous licensing calculations indicate that secondary gammas contribute only one percent of the total gamma radiation dose rate in the HSM concrete. Therefore, these effects are neglected for the QAD-CGGP analysis for the HSM concrete.

In order to substantiate increasing the primary gamma source strength when using QAD-CGGP for axial calculations, a set of benchmarking runs are performed. For this calibration analysis, QAD-CGGP is used to model an actual metal storage cask containing spent PWR fuel where the geometry of the cask and the contained fuel is similar to that of NUHOMS® and actual measured dose rates at the cask ends are available (7.10). As a result, it is concluded that increasing the primary gamma source strength in the active fuel region for the QAD-CGGP runs resulted in the maximum calculated dose rates at the cask ends meeting or slightly exceeding the maximum measured dose rates (average calculated dose rates exceeded average measured dose rates across the entire cask ends). Therefore, increasing the gamma source strength in the active fuel region when using QAD-CGGP for estimating gamma dose rates in the DSC axial direction results in conservative values.

Manual albedo calculations are used in conjunction with the fluxes calculated by QAD-CGGP and ANISN to provide upper bounds on the reflected dose rate at the HSM front wall and roof vent screens and the DSC/cask annular gap. The albedo method used is described in References 7.8 and 7.9.

B. HSM Surface Dose Rates The ANISN analytical model used to determine neutron and gamma dose rates outside the thick HSM walls (or roof) is presented in Appendix A. The DSC/HSM is represented by a cylindrical model which includes a homogenized, isotropic, self-shielding source region, the HSM heat shield, an air gap between the DSC and the thick concrete wall or roof. The effective radius of the source region is chosen to be the inside radius of the DSC. The mesh size in each material region is chosen to be on the order of one mean free path of neutrons through that material. A buckling factor correction for the infinite length model is made to estimate the dose rates at the active fuel region midplane.

C. Cask and HSM Axial Dose Rates An ANISN model of an infinite slab is also used to calculate the neutron dose rates in the axial direction (e.g., at the DSC top and bottom cover plate surfaces).

Appendix A illustrates the analytical QAD-CGGP models for the top and bottom axial dose rate calculations, respectively. A simple 3-D slab shield geometry and cylindrical source mesh are constructed. The results are extended to include the dose rate outside the thick HSM access door.

D. HSM Front Wall and Roof Bird Screen Dose Rates The total dose rate along the HSM roof and front bird screens is assumed to consist of direct and reflected components of both neutron and gamma radiation.

The direct radiation component is calculated similar to the nominal roof or side wall dose rates using QAD-CGGP for gamma rays and ANISN for neutrons.

The reflected radiation component is treated by a combination of computer and manual calculations since neither QAD-CGGP nor ANISN can directly model scattered reflection. The methodology used for both types of radiation are described below.

It is assumed that the primary scattering surface is the entire HSM side wall surface. Incident dose rates on the scattering surface are determined using QAD-CGGP or ANISN. In order to simplify calculations, a monoenergetic incident particles assumption is made for both neutrons and gamma rays. Gamma radiation is assumed to be entirely 1 MeV energy particles since the 1 MeV energy group contributes the most to the HSM exterior dose. Neutrons are assumed to be thermal for the same reason.

For neutrons, a simple normally incident, broad beam assumption is made. This is considered sufficient since the problem is significantly dominated by gamma radiation. For gammas, a more accurate modeling approach is used. Incident dose rate data is taken from the QAD-CGGP run for a very large number of detectors along the scattering surface. The detector mesh is sufficiently small to properly represent the streaming paths through the vents. For each detector point, it is assumed that the most likely incident angle is from the nearest point on the active fuel zone to the detector. This incident angle is then used to accurately compute the albedo factor.

To calculate the amount of radiation leaving the scattering surface in the direction of interest, albedo factors are calculated. Albedo factors for neutrons are calculated based on the data in Reference 7.9. Gammas are calculated by using a unique albedo factor for each of the QAD-CGGP detector points. Empirical differential dose albedo data for concrete (7.8 and 7.9) are used. A single scatter approximation is used. This process is repeated for several points along the bird screens in order to develop a dose rate profile.

The QAD-CGGP analytical model is shown in Appendix A. All the gamma sources are modelled in the active fuel region to obtain the gamma dose rate profile. The secondary gamma source is found to have a negligible effect on the penetration dose rates due to the large size of the primary gamma source and so it is not included.

E. Cask-DSC Annular Gap Dose Rate The exact annulus size depends on the position of the DSC within the transfer cask. An evaluation of radiation streaming

through a bounding annular gap (maximum possible) between the DSC and the transfer cask is performed. Manual albedo calculations are performed to assess the annular gap streaming. Neutron and gamma fluxes, as determined by ANISN outside the DSC at the fuel midplane, are assumed to be constant over the cask inner wall surface. The worst-case scenario is examined where the DSC is placed off-center in the cask resulting in no clearance on one side and the maximum gap on the other. The results are given in Table 7.3-2 and Table 7.3-3.

F. Transfer Cask Surface Dose Rates The ANISN model used to determine combined radiation dose rates on and away from the transfer cask surface during handling operations is shown in Appendix A. The analytical modelling methodology is similar to the ANISN model of the HSM previously described.

G. Shielding Analysis Results Results for the major NUHOMS® systems shielding analyses described above are presented in Table 7.3-2 and Table 7.3-3.

7.3.2.3 Shielding Provided by Lead Shield Plug

As an alternative to the solid steel shield plugs used in the analyses, shield plugs consisting of lead encased in steel can be used. The total thickness of these plugs is less than that of the solid steel shield plugs, which results in a longer canister cavity. However, the overall shielding effectiveness is equivalent, due to lead's higher density. This design is currently in use at Oconee Nuclear Station and licensed in the NUHOMS®-24P Topical Report/Safety Evaluation Report (7.13). A detailed discussion of this shield plug design and its effectiveness is provided in Appendix H.

7.3.3 Ventilation

The HSM has a ventilation system to provide for natural circulation cooling of the DSC. No off-gas treatment system is required due to the low exterior contamination level permitted for the DSC (see Sections 3.3.7 and 4.3.1).

The NUHOMS® system is designed to prevent the release of radioactive material during normal storage of the DSC in an HSM. No additional design features or equipment would result in a significant reduction in a postulated release of radioactive materials. Furthermore, no credible site accident would result in a release of radioactive materials to the environment due to the key features of the NUHOMS® system design. These include:

A. The use of a high integrity DSC with redundant seal welds at each end,

Using these conservative assumptions, the maximum bending stress obtained for dead weight is 8.6 ksi, and the combined effect of dead weight and seismic load is 14.8 ksi, which are well within the allowable limits of 16.0 ksi and 21.3 ksi, respectively, at 600°F operating temperature. Tensile and shear stresses of 6.3 ksi and 1.1 ksi, respectively, are calculated for the anchor bolts. These values are well within the allowable limits for the bolts. The calculated stresses demonstrate that the heat shield is capable of withstanding any normal, off-normal, or postulated accident condition.

8.1.1.8 HSM Axial Retainer for DSC

The design of the HSM axial retainer for the DSC is shown on the drawings in Appendix E. Additional details are provided in Section 8.2.3.2.

8.1.1.9 On-Site Transfer Cask Analysis

The on-site transfer cask is evaluated for normal operating condition loads including:

1. Dead Weight Load
2. Thermal Loads
3. Handling Loads

The NUHOMS®, transfer cask is shown in Figures 1.3-6 and on the design drawings contained in Appendix E. Table 8.1-20 summarizes the transfer cask calculated stresses for the normal operating loads. The methodology used to evaluate the transfer cask for the effects of normal operating loads is described in the following paragraphs. The analytical results and comparisons with the acceptance criteria defined in Section 3.2 are also presented in this section.

A. Transfer Cask Dead Weight Analysis

The effects of dead weight for a loaded transfer cask are evaluated for two cases. The first case evaluated is for the transfer cask hanging vertically by the two lifting trunnions, and loaded with its maximum payload of 90,000 pounds. Including the self weight of the transfer cask, this gives a total dead weight of 190,000 pounds. This load is the same as the normal handling loads evaluated in Paragraph B below.

The second dead weight load case evaluated for the transfer cask includes the loaded transfer cask resting in a horizontal position on the support skid transport trailer. In this orientation, the weight of the cask is shared between the lower support trunnions and the upper lifting trunnions resting in the pillow block supports of the support skid. The maximum dead load stresses are shown in Table 8.1-20. The local stresses around the trunnions are included in the normal handling load case described in Paragraph B.

B. Transfer Cask Normal Handling Loads Analysis

The major components of the transfer cask affected by the normal handling loads are the structural shell including the top and bottom cover plates, the upper and lower trunnions, the upper trunnion assembly insert plates, and the structural shell local to the trunnions. As described for the dead weight analysis, there are two normal operating cask handling cases which form the design basis for the transfer cask. These cases are illustrated in Figure 8.1-30 and are summarized as follows:

(i) The transfer cask is oriented in the vertical position, loaded to its maximum weight of 190,000 pounds, hanging by the upper lifting trunnions, and present in an area of the plant which requires conformance with the requirements of NUREG-0612. Accordingly, the allowable design stresses for the upper trunnions and their attachment welds are restricted to the smaller of one sixth of the material yield strength, or one tenth of the material ultimate strength for critical lifts. Allowable stresses for the remaining transfer cask components including the lower support trunnions are governed by the requirements of the ASME Code. The cask handling load is assumed to be shared equally between the two upper trunnions. An additional load factor of 15% is conservatively applied to account for the inertial effects of crane hoist motions in accordance with CMAA #70 recommendations. The transfer cask is designed so that the cask lifting yoke engages the outer most portion of the upper trunnion assembly. During the heaviest lift from the fuel pool, the cask/DSC is filled with water, the DSC top shield plug is in place, and the DSC and cask top cover plates are removed. For this condition the maximum ANSI N14.6 design load for the two upper trunnions due to a vertical lift is conservatively assumed to be 100 kips per trunnion plus the 15% allowance, or 115 kips, acting vertically, with a moment arm measured from the center of the yoke lifting hook to the middle surface of the transfer cask structural shell.

The maximum calculated upper trunnion stress for this load case are 6.3 ksi at the junction between the trunnion shoulder and the trunnion sleeve attached to the structural shell plate. This compares with the ANSI N14.6 allowable stress of 13.5 ksi for the trunnion material. The maximum weld stress is 7.3 ksi. The ANSI N14.6 allowable weld stress is 8.0 ksi. The maximum calculated stress in the lower trunnion is 9.5 ksi, and the maximum weld stress is 12.6 ksi. These stresses compare with the ASME Code allowable value of 20 ksi.

The maximum stress in the transfer cask structural shell occurs in the thickened plate at the junction with the upper trunnion sleeves. Stresses in the structural shell are calculated using the WRC Bulletin No. 107 (8.54) method. The

maximum calculated stress intensity in the cask structural shell is 42.6 ksi compared with an ASME Code allowable stress intensity value of 67.5 ksi.

(ii) During transport of the DSC from the plant's fuel building to the ISFSI, the transfer cask is oriented in a horizontal position, and is firmly secured to the support skid/transport trailer. During this operation the cask/DSC is loaded with fuel with the DSC top shield plug and the DSC and cask top cover plates in place. The resulting trunnion loads are developed by taking the summation of moments about a horizontal axis to account for the fact that the upper trunnions are closer to the horizontal center of gravity of the cask and thus carry a greater part of the total cask weight compared with the lower support trunnions. The transfer cask is supported in pillow block supports at two locations: the lower support trunnions near the bottom end of the cask, and the lifting upper trunnions supports near the top end of the cask. The allowable stresses for the on-site transfer load cases are governed by the ASME Code. The maximum postulated ASME Code upper lifting trunnion load is 118 kips while the critical load for the structural shell plate is a combination of the 58 kips dead load acting vertically plus a postulated lateral load of ± 1g or 116 kips acting radial to the shell. The loads from this case envelope the design basis transport operation loads of ±0.5g simultaneously applied in three directions to account for vibratory motion loads and start/stop loads which may occur during transport. The design loads for the lower support trunnion are developed in a similar manner.

During transfer of a DSC from the transfer cask to and from the HSM, the transfer cask is restrained to the HSM to prevent any relative motion. The restraint device functions by firmly securing the transfer cask lifting trunnions to embedded anchor points in the HSM front wall. The maximum load exerted on the transfer cask lifting trunnion is equal to one half the maximum hydraulic ram load, or 40 kips. This load magnitude is much less than the design basis handling loads described above and is therefore enveloped by the calculated stresses reported for that case. During transfer, the cask rail welds are loaded in shear by the friction of the sliding DSC. At an assumed shear of 80 kips, the stress on the rail welds is 5.8 ksi compared to an allowable value of 9.4 ksi.

The maximum calculated upper lifting trunnion stress for the transport load case is 3.6 ksi and occurs at the junction of the trunnion shoulder and the sleeve. This compares with an ASME Code allowable stress of 33.8 ksi. The maximum calculated weld stress is 7.1 ksi compared with an ASME Code allowable stress, of 45 ksi. The maximum calculated lower support trunnion stress is 9.5 ksi compared to the ASME Code allowable of 20 ksi. The maximum weld stress intensity is 12.6 ksi and the maximum cask structural shell stress intensity is 42.6 ksi compared with ASME Code allowable values of 20.0 ksi and 67.5 ksi respectively.

C. Transfer Cask Normal Operating Thermal Stress Analysis

The heat transfer analyses of the transfer cask are presented in Section 8.1.3. Analyses are performed for the normal operating ambient temperature range of 0°F to 100°F to establish the through wall thermal gradients shown in Figure 8.1-11 and Figure 8.1-12. A circumferential temperature gradient is also calculated with the transfer cask secured to the support skid/transport trailer. This gradient includes heat input due to solar heat flux.

The nominal room temperature gaps, of 0.5 inch axially and 0.375 inch radially, between the DSC and the transfer cask inner cavity are established to ensure that for the worst case tolerance buildup and differential temperatures that the DSC will slide in/out of the transfer cask without binding. Thermal stresses due to the differential expansion of the dissimilar materials: namely stainless steel, carbon steel, lead, and solid neutron shielding material, are evaluated. The analyses for the normal operating thermal loads are summarized in the paragraphs which follow.

Calculations for the combined effect of the worst case radial thermal gradients, and the circumferential temperature variation, are performed using the combined transfer cask/DSC axisymmetric finite element ANSYS models shown on Figures 8.2-9 and 8.2-10 and described in Section 8.2.5.2, Paragraph B (i). In addition, the ANSYS models are also used to evaluate the effects of differential expansion of the dissimilar materials. The temperatures associated with the radial and axial thermal gradients are input to the analytical model as discrete element temperatures and the resulting induced thermal stresses calculated. Transfer cask stresses due to axial growth of the cask are minimized by the design of the support skid pillow block support system.

The results of these analyses are shown in Table 8.1-20.

D. Transfer Cask Analysis Results Comparisons

The results of the transfer cask analyses for normal operating loads are combined to obtain stresses for the associated load combinations which are compared to the appropriate allowable stresses, as discussed in Section 8.2.10.

8.1.2 Off-Normal Load Structural Analysis

Table 8.1-2 shows the off-normal operating loads for which the NUHOMS® safety-related components are designed. This section describes the design basis off-normal events for the NUHOMS® system and presents analyses which demonstrate the adequacy of the design safety features of a NUHOMS® system.

For an operating NUHOMS® system, off-normal events could occur during fuel loading, cask handling, trailer towing, canister transfer and other operational events. Two off-normal events are defined which bound the range of off-normal conditions. The limiting off-normal events are defined as a jammed DSC during loading or unloading from the HSM and the extreme ambient temperatures of -40°F (winter) and +125°F (summer). These events envelope the range of expected off-normal structural loads and temperatures acting on the DSC, transfer cask, and HSM.

8.1.2.1 Jammed DSC During Transfer

The interfacing dimensions of the top end of the transfer cask and the HSM access opening sleeve are specified so that docking of the transfer cask with the HSM is not possible should gross misalignments between the transfer cask and HSM exist. Furthermore, beveled lead-ins are provided on the ends of the transfer cask, DSC, and DSC support rails to minimize the possibility of a jammed DSC during transfer. Nevertheless, it is postulated that if the transfer cask is not accurately aligned with respect to the HSM, the DSC binds or becomes jammed during transfer operations. Based on the dimensions of the DSC, transfer cask, and HSM, the maximum misalignment of the sliding surfaces is limited by operating procedures to 1/8 inch or less. Assuming a worst case misalignment in positioning and docking the transfer cask with the HSM access opening sleeve, the maximum possible misalignment which would permit transfer of the DSC to occur is 1/4 inch. Although unlikely, any greater misalignment may cause axial sticking and/or a rotation of the DSC to occur which may result in a binding condition.

A. Detection of the Event

When a jam of the DSC occurs during transfer the hydraulic pressure in the ram begins to increase. The maximum ram push/pull forces are limited to a maximum load equal to 80,000 lb (maximum DSC loaded weight). Override controls are available to the operator to increase the ram force up to its maximum design load, equal to 80,000 lb (maximum DSC loaded weight), or to interrupt the transfer operation at any time.

B. Axial Sticking of the DSC

The DSC has three-to-one beveled lead-ins on each end which are designed to avoid binding or sticking on small (≤ 1/4 inch) obstacles. The transfer cask and the DSC support rails inside the HSM, are also designed with lead-ins to minimize binding or obstruction during DSC transfer. The off-normal handling load event postulated to occur assumes that the leading edge of the DSC becomes jammed against some immovable feature because of gross misalignment of the transfer cask.

During the transfer operation, the force exerted on the transfer cask and the DSC by the hydraulic ram is that required to first overcome static, then sliding friction of the DSC

and the transfer cask or DSC support rail sliding surfaces. If motion is prevented, the hydraulic pressure increases, thereby increasing the force on the DSC until the system pressure limit is reached. This limit is controlled so that adequate force is available to overcome variations in surface finish, etc., but is sufficiently low to ensure that component damage does not occur. To overcome potentially higher resistance loads due to binding of the DSC in either the transfer cask or the HSM, the maximum ram force is designed to be equal to the weight of the loaded DSC. This force corresponds to a coefficient of friction of one and is the design basis for the hydraulic ram system. This postulated loading condition is illustrated in Figure 8.1-31. The resulting ram load acting on the DSC grapple ring assembly and bottom cover plate are analyzed in the paragraphs which follow.

The DSC bottom cover plate and the grapple ring assembly are subjected to a maximum force of 80,000 pounds. The method of analysis is the same as described in Sections 8.1.1.1 and 8.1.1.2. The maximum bending stress intensity calculated for the DSC bottom cover plate is 20.6 ksi. This stress is well within the ASME Code allowable limit.

It is conservatively assumed that the force created by the jammed DSC condition produces a force-couple of magnitude F x R, where: F is the imposed force of 80,000 pounds and R is 33.625 inches, the outside radius of the DSC shell. Thus, a moment of 2690 in.-kip is produced in the DSC shell. The gross section modulus available to resist this bending moment is 2165 in.^{3}. Thus, the DSC shell stress due to the 2690 in.-kip moments is:

$$S_{mx} = \frac{M}{S} \qquad (8.1\text{-}35)$$

Where:

M = 2690 in.-kip, Bending moment

S = 2165 in.^{3}, DSC section modulus

Therefore:

$$S_{mx} = 1.24 \text{ ksi}$$

This magnitude of stress is negligible when compared to the allowable membrane stress of 17.5 ksi.

For a jammed DSC, the 80,000 pound ram load is postulated to be reacted by the DSC support rails inside the HSM at the most critical location. At the same time, a concentrated force of one half of the DSC weight is assumed to act vertically at mid span of the DSC support rail member. The results of this analysis are reported in Table 8.1-12, Table 8.1-13, and Table 8.1-14.

C. Binding of the DSC

If axial alignment within system operating specifications is not achieved, it may be possible to pinch the DSC shell as shown in Figure 8.1-32. The pinching force acting on the DSC shell and the transfer cask inner liner is directly proportional to the angle of rotation. The maximum possible inclination angle established by various conservative geometric and operational assumptions is less than one degree. If this angle is conservatively assumed to be one degree, then the pinching force is taken as the product of the maximum ram loading of 80,000 pounds and the sine of the angle, or 1,400 pounds. This force is assumed to be distributed around the circumference of the DSC shell and either the transfer cask or HSM sleeve as a cosine distribution.

The 1,400 pound load is conservatively assumed to be applied as a point load at a location away from the ends of the cask or DSC. The resulting maximum stresses are given by Table 31, Case 9a of Roark (8.16) as:

Membrane stress:

$$\sigma = \frac{0.4P}{t^2}$$

Bending stress:

$$\sigma' = \frac{2.4P}{t^2}$$

Therefore, the maximum stress is:

$$\sigma + \sigma' = \frac{2.8P}{t^2}$$

For the DSC shell, t = 0.625 inch. For the cask inner liner, t = 0.5 inch. Substituting for t and P equal to 1400 pounds, the maximum extreme fiber stresses in the DSC shell and cask inner liner are 10.0 ksi and 15.7 ksi respectively. These bounding stresses are well within the ASME Code Service Level C allowable of 29.1 ksi for an off-normal jammed DSC event.

The tangential component of ram loading under the assumed condition is less than the force of the jammed condition calculated previously in Paragraph B and as such is not considered further. The stresses on the DSC are given in Table 8.1-12 and Table 8.1-13, and for the DSC support assembly inside the HSM for the jammed condition are reported in Table 8.1-14.

D. Consequences of Jammed DSC

In both scenarios for a jammed DSC, the stress on the DSC shell and transfer cask inner liner are demonstrated to be much less than the ASME Code allowable stress. Therefore, permanent deformation of the DSC shell and cask inner liner does not occur. There is no potential for breach of the DSC containment pressure boundary and therefore, no potential for release of radioactive material.

E. Corrective Action

In both cases, the required corrective action is to reverse the direction of the force being applied to the DSC by the ram, and return the DSC to its previous position. Since no permanent deformation of the DSC or transfer cask inner liner occurs, the sliding transfer of the DSC to its previous position is unimpeded. The transfer cask alignment is then rechecked, and the cask repositioned as necessary before attempts at transfer are renewed.

8.1.2.2 Off-Normal Thermal Loads Analysis

As described previously, the NUHOMS® system is designed for use at all reactor sites within the continental United States. Therefore, off-normal ambient temperatures of -40°F (extreme winter) and 125°F (extreme summer) are conservatively chosen. In addition, even though these extreme temperatures would likely occur for a short period of time, it is conservatively assumed that these temperatures occur for a sufficient duration to produce steady state temperature distributions in each of the affected NUHOMS® components. Each licensee should verify that this range of ambient temperatures envelopes the design basis ambient temperatures for the ISFSI site. The NUHOMS® system components affected by the postulated extreme ambient temperatures are the transfer cask and DSC during transfer from the plant's fuel building to the ISFSI site, and the HSM during storage of a DSC.

The thermal stresses in the various NUHOMS® system components due to the off-normal temperatures are calculated in the same manner as described for the normal operating thermal loads. A description of these methods is provided in Sections 8.1.1.2 for the DSC shell, 8.1.1.3 for the DSC internals, and 8.1.1.8 for the on-site transfer cask.

A. HSM Off-Normal Thermal Load Analysis

As described in Section 8.1.3.1, the maximum HSM temperatures are calculated for the off-normal extreme ambient temperature of 125°F. The resulting maximum HSM concrete temperature calculated for off-normal conditions is 250°F. The maximum calculated temperature gradient is 60°F for the HSM roof and 19°F for the HSM side walls. These values are comparable to the maximum temperature gradients calculated for the 100°F normal operating ambient temperature. The short duration peak concrete temperature meets the ACI 349-85 limit of 350°F. Since the ultimate shear and moment capacities for each module concrete section are the same for off-normal and accident conditions (see Section 8.2.7), the maximum calculated shear forces and bending moments resulting from either case are conservatively used for design. The accident thermal moments and shears are conservatively used for the off-normal thermal case.

The DSC support assembly is designed as a free standing frame structure as described in Section 8.1.1.4.C, and therefore the increase in temperature has minimal affect on the DSC support structure.

B. DSC Off-Normal Thermal Stress Analysis

The off-normal thermal gradients and maximum temperatures for -40°F and 125°F ambient air are developed for the DSC resting in the cavity of transfer cask as described in Section 8.1.1.3. The 100°F case with solar insolation bounds the 125°F case without solar. Therefore, the 100°F results are used. The maximum off-normal calculated surface temperature for the DSC shell is 335°F for an extreme ambient temperature of 100°F. The corresponding internal pressure for the DSC is shown in Table 8.1-6.

The off-normal thermal gradients and maximum temperatures are also developed for the DSC resting in the HSM, as described in Section 8.1.3.2. The maximum off-normal surface temperature calculated for the DSC shell is 361°F for an extreme ambient air temperature of 125°F.

There may be restrictions for onsite transfer and handling of the DSC under these extreme temperature conditions. Refer to Sections 10.3-13 and 10.3-14 of this CSAR.

C. NUHOMS®-24P Transfer Cask Off-Normal Thermal Stress Analysis

As described in Section 8.1.3.3 the maximum temperatures and associated through wall thermal gradients are calculated for a loaded on-site transfer cask for a maximum ambient temperature range of -40°F and 125°F. The temperature gradient for the 125°F ambient temperature case includes a sun screen that allows no solar heat flux on the cask. The bounding 100°F case with solar insolation results in a maximum calculated temperature of 235°F on the exterior of the transfer cask and a maximum through wall temperature gradient of 61°F for the bounding postulated off-normal cases.

The results of the off-normal thermal analyses shown in Table 8.1-12, Table 8.1-13 and Table 8.1-21 for each of the NUHOMS® system components are combined with the appropriate results from other analyses for the associated load combinations. The resulting stresses and comparisons with allowable stresses are discussed in Section 8.2.10.

There may be restrictions for onsite handling of the transfer cask with a loaded DSC under these extreme temperature conditions. Refer to Sections 10.3-13 and 10.3-14 of this CSAR.

8.1.3 Thermal Hydraulic Analysis

This section of the SAR describes the thermal analysis of the NUHOMS® HSM, DSC and transfer cask. The analytical models of the HSM, the DSC and the transfer cask are described and the calculation results summarized. The thermophysical properties of the NUHOMS® system components used in the thermal analysis are listed in Table 8.1-8 and Table 8.1-9. The following evaluations are performed for the NUHOMS® system:

1. Thermal Analysis of the HSM

2. Thermal Analysis of the DSC in the HSM

3. Thermal Analysis of the DSC in the Transfer Cask

The NUHOMS® components are evaluated for a range of design basis ambient temperatures as follows:

A. Normal Operating Conditions: The system components are evaluated for average ambient temperatures in the range of 0°F minimum (winter) to 100°F maximum (summer). Ambient temperatures within this range are assumed to occur for a sufficient duration to cause a steady-state temperature distribution in the NUHOMS® system components. For the evaluation of thermal cycling and material properties, fluctuations in the ambient temperature from winter to summer conditions are assumed to occur once per year for the HSM, and six times per year for the transfer cask. The lifetime average ambient temperature for the 50 year service life is taken as 70°F. The "stress-free" temperature for material properties is also assumed to be 70°F.

B. Off Normal and Accident Conditions: The system components are evaluated for the extreme ambient temperatures of -40°F (winter) and 125°F (summer). Should these extreme conditions ever occur, they would be expected to last for a very short duration of time. Nevertheless, these ambient temperatures are conservatively assumed to occur for a sufficient duration to cause a steady-state temperature distribution in the NUHOMS® system components (a few hours for the transfer cask, several days for the HSM). In addition, for postulated accident conditions the HSM ventilation inlet and outlet openings are assumed to be completely blocked for a five day period concurrent with the extreme ambient conditions (125°F).

8.1.3.1 Thermal Hydraulics of the HSM

A. Principles of HSM Cooling System

The HSM is cooled by a natural draft of air entering through the air inlet openings located in the lower side walls of the HSM, and exiting through air outlet openings located in the upper side walls of the HSM. Cooler air at the prevailing ambient conditions is drawn into the HSM. The cooler air flows from the bottom of the HSM along the outer DSC surface where it is warmed by the decay heat of the spent fuel inside the DSC. The warmed air flows along the ceiling of the HSM and exits through the air outlet openings. The HSM vent geometries and flow paths for ventilation air are illustrated in Figure 8.1-34 and Figure 8.1-35 and on the drawings contained in Appendix E.

The HSM roof and side walls are the primary concrete surface conducting heat to the outside environment. For analytical purposes, an HSM centered in a group of HSMs, each loaded with a DSC, is assumed. For the thermal analysis of an interior HSM with no DSC present in the adjacent HSMs, the outer surface of the wall is assumed to be exposed to the prevailing ambient conditions. For the thermal analyses of a single free-standing HSM, or an HSM at the end of a multiple module array, a shield wall is modeled, the outer surface of which is assumed to be exposed to the prevailing ambient conditions. The ISFSI basemat is in contact with soil, which is assumed to be at a

constant temperature at a combined depth of eleven feet. Air infiltration and heat radiation from the HSM access opening door is conservatively neglected.

The temperature difference (ΔT) and distribution, and the height difference (Δh) between the HSM vent inlets and outlets creates a "stack effect," to drive air through the HSM. The ventilation air has sufficient velocity to provide adequate cooling for the DSC so that the spent fuel cladding temperature remains below acceptable limits. The ventilation flow paths inside the HSM are designed so that the pressure difference due to the stack effect (ΔP_s) are greater than the pressure losses due to friction, vent area changes and flow direction changes (ΔP_f).

The pressure loss due to friction is calculated by summing the individual losses (K/A^2, where K is the loss coefficient and A is the flow area) through the air inlet openings, the air outlet openings, and the flow paths through the HSM. Standard loss coefficients for entrances, exits, screens, elbows, slots, friction, flow over cylinders, flow between parallel plates, flowpath expansions and contractions are taken from References 8.28 and 8.44. The pressure drop due to the flow losses is determined by:

$$\Delta P_f = \frac{\dot{m}^2}{2 g_c \bar{\rho}} \sum_i \frac{K_i}{A_i^2} \qquad (8.1\text{-}37)$$

Where:

$\dot{m}$ = Mass flow rate (lbm/ sec)

g_c = Gravitational constant

$\bar{\rho}$ = Average density(lbm/ ft^3)

The pressure drop from the stack effect is calculated as follows:

$$\Delta P_s = \frac{g \rho_s \Delta T_{avg} h}{g_c T_s} \qquad (8.1\text{-}38)$$

Where:

ΔT_{avg} = Stack average temperature difference (°R)

h = Height (ft.)

g = Local acceleration due to Gravity = g_c

T_s = Stack average temperature (°R)

ρ_s = Stack average density (lbm/ft^3)

The above equations are solved iteratively to determine values of ΔT_{avg} and $\dot{m}$ at specific values of (K/A^2) for $\Delta P_f \leq \Delta P_s$. This flow rate calculation conservatively accounted for possible flow separation at the center of the DSC which then flows toward the HSM side wall outlet vents. Based on this analysis, the geometry of the flow areas for the HSM are established as shown on the drawings in Appendix E. Using the calculated values of $\dot{m}$, the HSM bulk air temperatures surrounding the DSC are determined assuming isotropic heat flow from the DSC surface and integrating the energy equation around the DSC. The natural circulation cooling flow over the DSC surface for the standardized NUHOMS® system design is substantially higher (approximately three times) than the NUHOMS®-07P design due to the increased capacity of the HSM vents and the increased driving force of the DSC. The results of this analysis are shown in Table 8.1-22 (PWR) and Table 8.1-23 (BWR) for a range of ambient conditions.

The resulting bulk air temperatures for the range of ambient conditions are used in the subsequent HSM analyses to calculate the temperatures throughout the HSM and DSC shell. In the HSM HEATING6 model, the Boundary Type 1 (surface-to-boundary) is used to describe the natural circulation heat transfer between the DSC and the adjacent cooling air at the bulk air temperatures. The DSC temperatures are used as boundary conditions to determine the temperature distributions for the DSC internals and the spent fuel assembly regions. These calculations are described in the following paragraphs.

A metal heat shield is placed around the upper half of the DSC to shield the HSM walls and roof from thermal radiation effects. The location and geometry of the heat shield is shown in Figure 4.2-7 and on the HSM drawings contained in Appendix E. The heat shield protects the HSM concrete walls and ceiling from direct thermal radiation emanating from the DSC surface and significantly increases the combined surface area for convection cooling inside the HSM. The concrete walls and ceiling are subjected to thermal radiation from the back side of the heat shield, however, the radiation is emanated at substantially lower temperatures than the direct thermal radiation from the DSC surface.

B. Computer Program:

The HEATING6 computer program is used for the heat transfer analysis of the HSM and DSC. The HEATING6 program is known as "The HEATING Program," where HEATING is an acronym for "Heat Engineering and Transfer In Nine Geometries." HEATING6 is designed to be a functional module within the SCALE system of computer programs (8.15) for performing standardized analysis for licensing evaluations of nuclear systems. Thus its features are designed to perform thermal analyses on problems arising in licensing evaluations, and its input format is designed to be compatible with that of other functional modules within the SCALE system. HEATING6 may also be used as a stand-alone heat conduction code.

HEATING6 solves steady-state and/or transient heat conduction problems in one-, two-, or three-dimensional Cartesian or cylindrical coordinates or in one-dimensional spherical coordinates. The thermal conductivity, density, and specific heat may be both spatially and temperature-dependent. In addition, the thermal conductivity may be anisotropic. Selected materials may undergo a change of phase for transient calculations involving one of the explicit procedures specified. The heat generation rates may be dependent on time, temperature and position. Boundary temperatures may be dependent on time and position. Boundary conditions which may be applied along surfaces of an analytical model include specified temperatures or any combination of prescribed heat flux, forced convection, natural convection, and radiation. Models are also available to simulate the thermal fin efficiency of certain finned surfaces. In addition, one may specify radiative heat transfer across gaps or regions which are embedded in the model. The boundary condition parameters may be time- and/or temperature-dependent. The mesh spacing may be variable along each axis.

The HEATING6 thermal calculations performed for the HSM and DSC employed the optional direct solution technique of the program. This technique generally required from three to eight iterations per calculation to obtain results with a convergence of better than 0.1% on the temperatures at each node in the analytical model.

For the DSC thermal calculations one hundred percent of the heat is conservatively assumed to be generated in the active fuel length of the spent fuel rods with no heat generation in the remaining portion of the fuel rods or the non-fuel bearing components. This conservative approach provides bounding values of spent fuel cladding temperatures for storage. The amount of heat rejected to the HSM concrete by the spent fuel due to direct gamma radiation or neutron emission is a very small fraction of the total heat generated by fission product decay.

C. Thermal Model of the HSM

The HEATING6 thermal model of the HSM is depicted in Figure 8.1-36. The model represents the symmetric right half of a HSM and DSC cross section at an axial location of maximum decay heat power. HEATING6 models of the HSM have been generated for both the NUHOMS®-24P and NUHOMS®-52B designs, differing only in the DSC decay heat, DSC length, and the bulk air temperatures. A bounding decay heat power level for 40,000 MWD/MTU, 4.0% initial enrichment PWR fuel with a base case 5 year cooling time of 1 kW/PWR assembly (resulting in a total of 24 kW/DSC) is used for the NUHOMS®-24P design. A heat flux of 284.3 BTU/hr-ft.^{2} (0.0329 BTU/min.-in.^{2}) is determined by distributing the total decay heat power of 24 kW over the entire internal surface area of the DSC. In the PWR HEATING6 models, a value of 0.0314 BTU/min-in.^{2} is used based on the DSC shell model regions. The heat rejection through the fuel assembly end fittings and the DSC shield plugs and cover plates are included. Similarly, a heat flux of 0.0238 BTU/min-in.^{2} is used for the 19.2 kW/DSC NUHOMS®-52B design.

The HEATING6 analytical model of the HSM consists of a typical HSM cross-section of unit thickness. In addition, symmetry or an insulated boundary is assumed along the vertical centerline of the HSM, as shown in Figure 8.1-36. The HEATING6 model includes 19 regions for the concrete wall, roof slab, floor, and basemat of the HSM. The soil below the ISFSI basemat is modeled as a seven foot thick region with a constant temperature boundary at the edge of this region. Sufficient nodal refinement is used in the HSM analytical model to obtain accurate temperature distributions through the thickness of the HSM walls, roof, and floor slab.

The thermal analysis of a typical HSM is performed for a loaded DSC located in the interior of a multiple module array with a DSC present in the two adjacent HSMs. The HSM roof and side walls are modeled, the outer surfaces of which are assumed to be exposed to the prevailing ambient conditions. For summer ambient conditions, a solar heat flux of 62 BTU/hr.-ft.^{2} for normal conditions, and 123 BTU/hr.-ft.^{2} for off-normal and accident conditions, is conservatively applied to the roof surface. The enveloping solar heat flux of 123 Btu/hr-ft^2°F for the extreme off-normal case is based on Reference 8.59. It is calculated for the worst case location in the contiguous United States using the maximum day long solar irradiation value specified for a horizontal surface in the worst month with the maximum clearness correction. Similarly, the solar heat flux of 62 Btu/hr-ft^2°F for the normal case is an enveloping value for the southeastern United States and is approximately half of the extreme off-normal value. Solar heat loads are conservatively neglected for the HSM thermal analysis for winter ambient conditions for normal, off-normal and accident conditions.

The DSC cylindrical shell is approximated in the model by 40 rectangular regions with the thickness and properties of the stainless steel DSC shell. The approximation using rectangular regions is necessary since HEATING6 restricts the user to one geometry type in the same analytical model. To improve the approximation, the narrow sides on the modeled DSC regions are assumed to be insulated while the longer sides of the modeled DSC regions have the same surface area as the outer surface of the DSC cylindrical shell. The analytical model of the HSM includes three regions for the metal heat shield located between the top and sides of the DSC, and the roof and walls of the HSM, as shown in Figure 8.1-36. The analytical model also includes 44 regions to model the air gaps between the DSC, the heat shield, and the HSM.

For the PWR HSM thermal analysis, a value of 0.0314 Btu/Min-in^2 is calculated for the decay heat flux through the DSC shell using the DSC shell assembly internal surface area. Use of the DSC shell assembly internal surface area, including the end covers, and exclusion of the 1.08 axial peaking factor for the HSM thermal analysis is based on the test data contained in Reference 7.10. The reference test data for cylindrical casks shows that the measured surface temperature profiles are relatively flat over the entire length, indicating that the heat flux is nearly uniform over the surface and axial peaking is not affecting the surface temperatures distribution. One reason for the relatively flat temperature profiles is the high thermal conductivity of the DSC shell material and

relatively open design of the DSC basket assembly. The resulting heat flux is therefore more representative of the manner in which heat is actually rejected to the HSM air space by the DSC. The active fuel length of 144 inches and the peaking factor of 1.08 are conservatively used in the thermal analysis of the DSC internals for the evaluation of local effects such as the peak fuel clad temperature. The outer surface of the DSC shell dissipates heat to the HSM through both convection and radiation. The air surrounding the DSC is modeled as a gap filled with gas (air), thus providing a mechanism for heat transfer from all HSM interior surfaces and the DSC outer surface. Due to a limitation in the HEATING6 code, conduction in the air gap could not be included, however, this is a minor effect.

Convection heat transfer from the DSC and HSM surfaces is modeled by inputting a constant air temperature for the air gap regions between the DSC and HSM. These temperatures are also used to calculate the heat transfer coefficients for these gas regions. The bulk air temperatures used for each ambient temperature case are shown in Table 8.1-22 (PWR) and Table 8.1-23 (BWR). With these temperatures and the equations for the heat transfer coefficients described below, the HEATING6 program calculates the temperatures of the DSC exterior surface and the HSM interior and exterior surfaces.

The spent fuel assembly decay heat is removed from the DSC outer surface through convection. A heat transfer coefficient h_{can} is used which corresponds to the heat transfer coefficient for natural circulation of air over a horizontal cylinder. Horizontal slab surfaces with convection on their lower surface, such as the HSM ceiling, are assumed to be cooled by natural convection with a heat transfer coefficient of h_{ceil}. Horizontal surfaces with convection on their upper surfaces, such as the HSM roof outer surface, are assumed to be cooled by natural convection with a heat transfer coefficient of h_{plate}.

Both sides of the metal heat shield and the HSM concrete walls are assumed to be cooled by air with a heat transfer coefficient of h_{wall}. Radiation heat transfer is modeled between the DSC outer surface and heat shield, between the DSC outer surface and the HSM floor, and between the heat shield and the HSM concrete walls and ceiling. The external surface of the HSM roof is assumed to be cooled by external air with a heat transfer coefficient of h_{plate}, and by radiation cooling to ambient air. The formulas used for the calculation of the heat transfer coefficients for natural convection are as follows [all in BTU/(hr. ft.^{2} °F)] (8.28):

$$h_{can} = 0.22\,(\Delta T)^{1/3} \qquad (8.1\text{-}39)$$

$$h_{ceil} = 0.12\,(\Delta T/L)^{1/4} \qquad (8.1\text{-}39a)$$

$$H_{plate} = 0.22\,(\Delta T)^{1/3} \qquad (8.1\text{-}39b)$$

$$H_{wall} = 0.19\,(\Delta T)^{1/3} \qquad (8.1\text{-}40)$$

Where:

$\Delta T = T_{surface} - T_{air}$

L = 1/2 HSM ceiling width

The value of length scale (L) is assumed to be half of the HSM ceiling width. This length is conservatively chosen based on the assumption that the average distance the air has to travel over the DSC surface before exiting through the HSM air outlet vents will be at least one half of the HSM ceiling width, or 40 inches. Reference 8.60 recommends that the average of length and width of a horizontal plate be used for L. Use of one half of the HSM ceiling width is conservative since the average of the length and width of the HSM ceiling is greater than one half of the HSM ceiling width.

The heat transfer coefficients are updated by HEATING6 following each iteration using the resulting average temperature of the corresponding surface node. A sufficient number of iterations are performed until the temperatures differ by less than 0.1% from the previous temperature calculated in two consecutive iterations indicating that stable convergence is achieved. The remaining thermal-hydraulic parameters used in the HSM heat transfer calculations are given in Table 8.1-8 and Table 8.1-9.

The results of the HEATING6 analysis for the HSM are in the form of temperature distribution profiles. Figure 8.1-37 shows an example of the HEATING6 results for the HSM. The resulting temperature profile shows the steady state temperature distribution on the outer surface of the DSC, and at various locations throughout the HSM.

The calculated HSM wall and roof temperature gradients are used in the reinforced concrete structural analysis for long term thermal loads which occur during normal operating conditions, and the short term thermal loads occurring during off-normal and postulated accident conditions. The HSM thermal analysis results are also used to obtain steady state temperature distributions for the outer surface of the DSC for the range of design basis ambient conditions. These steady state surface temperatures are used as a temperature boundary condition for the DSC model, described in Section 8.1.3.2.

D. Description of the Cases Evaluated for the HSM

The HSM thermal analyses are performed for the design basis ambient air temperatures defined in Section 8.1.3. These include a total of four cases with ambient air entering and/or surrounding the HSM at the following temperatures:

8.1.1.6 HSM Door Analyses

The access opening for transferring the DSC into and out of the HSM is protected by a thick solid steel door with a core of concrete shielding material. A rolled angle section is embedded in the HSM front wall to support the HSM door. The door and support frame are recessed into the HSM front wall as shown in Figure 4.2-6.

For normal system operation, the door assembly is only subjected to the dead weight which is transmitted by bearing directly into the HSM front wall, and handling loads resulting from installation and removal of the door during DSC transfer operations.

The concrete bearing strength required to support a bearing load on the frame of the door weight of 5900 pounds is a small fraction of the ACI 349 (Section 10.15) permissible concrete bearing strength of $\phi[0.85\ f_c'A_1] = 0.7\ [0.85 \times 5 \times 6 \times 80.63] = 1440$ kips. The embedded anchors for the HSM door frame are designed in accordance with ACI 349-85, Appendix B. The governing design load combination for the HSM door embedded anchors is the dead load plus seismic load combination. The dead load consists of the weight of the door. The seismic load consists of the longitudinal seismic accelerations acting on the DSC and the door itself. The seismic loads produce shear and tension on the anchors. Based on the ANSYS analysis results for the HSM, the maximum tensile force and shear force on the anchors is 0.7 kips while the maximum capacity on the embedded anchors is 10.6 kips in shear and tension.

8.1.1.7 HSM Heat Shield Analysis

The design of the HSM heat shield assembly is shown in Figure 4.2-7 and on the drawings in Appendix E. The heat shield acts to reduce the HSM concrete temperatures due to the heat rejected by the spent fuel assemblies during normal operating conditions, off-normal conditions, and postulated accident conditions. The only loading that the heat shield assembly is subjected to during normal operation is its own dead weight. Since over-size holes are used at the bolted connections to the HSM no thermal expansion loads are experienced by the heat shield.

The only loading that the HSM heat shield assembly experiences during off normal conditions or a postulated accident is the inertia force associated with a seismic event. The heat shield and the embedded anchor bolts are analyzed for normal , off-normal, and accident loads. The heat shield is conservatively analyzed as a series of simply supported beams with a span equal to the distance between two adjacent bolts in the longitudinal direction. Also, in lieu of a frequency analysis to establish the dynamic amplification factor (DLF), the maximum DLF of 4.25 for 2% damping is selected from the design response spectra curve.

B. Design Basis Internal Pressure

The range of NUHOMS®-24P DSC internal pressures for operating conditions and postulated accident conditions and the associated helium gas temperatures are shown in Table 8.1-6. The DSC internal pressure, with the fuel cladding intact, for normal operating conditions is a maximum of 21.4 psia (6.7 psig) for the seasonal normal operating temperature range of 0°F to 100°F. The DSC internal pressure for off-normal or postulated accident conditions is a maximum of 65.0 psia (50.3 psig) over a seasonal off-normal temperature range of -40°F to 125°F. The bounding design basis off-normal or postulated accident pressures are determined by assuming cladding failure in 100% of the spent fuel rods stored in the DSC. The cladding failure is assumed to release all the fuel rod fill gas and 30% of the fission gas generated in PWR fuel assemblies irradiated to 40,000 MWD/MTU. This postulated worst case condition is included in the design basis for the NUHOMS®-24P DSC as a conservative means of providing overpressure protection for the DSC containment boundary. For normal operating conditions, the gas inside the DSC is assumed to be brought to thermodynamic equilibrium with the maximum normal ambient temperature of 100°F. These calculations are repeated for the NUHOMS®-52B DSC with the results listed in Table 8.1-7. Similar assumptions are made for off-normal and accident conditions to determine the DSC internal pressure occurring with a gas temperature at an extreme ambient temperature of 125°F. The effects of postulated accident pressures are described in Section 8.2.

C. Design Basis Thermal Loads

The NUHOMS® transfer cask, DSC, and HSM are subjected to the thermal expansion loads associated with normal operating conditions. The range of average daily ambient temperatures used for the design of the transfer cask, DSC, and HSM for normal operating conditions is 0°F to 100°F. The normal operating seasonal average daily ambient temperature fluctuates from 0°F minimum (winter) to 100°F maximum (summer) and is conservatively assumed to occur for a sufficient duration to establish steady state conditions for the transfer cask, DSC and HSM. These minimum and maximum steady-state long-term ambient design temperatures, envelop the 24 hour average seasonal ambient temperature at any location within the contiguous United States (8.46).

The long-term average normal ambient temperature for the 50 year design life of the system is assumed to be 70°F. This base case average ambient temperature bounds practically all reactor sites within the United States (8.27). Exceptions should be addressed on site specific basis by the licensee as necessary.

The range of ambient temperature cases analyzed are further defined in Section 8.1.3. The resulting temperature distributions in the HSM, DSC and transfer cask are determined by performing thermal analyses for these ambient conditions. The thermal analyses, described in Section 8.1.3, provide temperature distributions for the HSM,

Table 8.1-3
Mechanical Properties of Materials

Material	Temperature (°F)	Stress Properties[1] (ksi)			Elastic Modulus[1] (x1 0E3 ksi) (E)	Instantaneous Coefficient of Thermal Expansion[1] (μ in./in -°F)
		Stress[6] Intensity (S_m)	Yield Strength (S_y)	Ultimate Strength (S_u)		
Stainless Steel ASME SA240 Type 304 and SA479 Type 304	70	-	30.0	75 0	28.3	8.46
	100	20.0	30 0	75.0	-	8.63
	200	20.0	25.0	71.0	27.6	9.08
	400	18 7	20 7	64.4	26.5	9.80
	500	17.5	19 4	63.5	25.8	10 10
	600	16.4	18.2	63.5	25.3	10.38
	800	15.2	16.8	62.7	24.1	10.79
Carbon[7][8] Steel ASME SA36	70	-	36 0	58.0	29.5	6.41
	100	19.3	36.0	-	-	6.53
	200	19 3	32.8	-	28.8	6.93
	400	19.3	30.8	-	27.7	7.66
	500	19.3	29.1	-	27.3	8.03
	600	17.7	26.6	-	26.7	8 35
Carbon[8][9] Steel Plate ASME SA516 Grade 70	70	23.3	38.0	70.0	29.5	5.42
	100	23.3	38.0	70.0	29.3	5.65
	200	23.1	34.6	70.0	28.8	6.39
	400	21.7	32.6	70.0	27.7	7.60
	500	20.5	30.7	70.0	27.3	8.07
	600	18.7	28.1	70.0	26.7	8.46
Carbon[8] Steel Rod ASME SA696 Grade B	70	-	35.0	60.0	29.3	5.42
	100	20 0	35 0	60.0	29.1	5.65
	200	20.0	31.9	60.0	28.6	6.39
	400	20.0	30.0	60.0	27.5	7.60
	500	18.9	28.3	60.0	27.1	8.07
	600	17.3	25.9	60.0	26.5	8.46

Table 8.1-3
Mechanical Properties of Materials

(continued)

Material	Temperature (°F)	Stress Properties[1] (ksi)			Elastic Modulus[1] (x1.0E3 ksi) (E)	Instantaneous Coefficient of Thermal Expansion[1] (m in./in.-°F)
		Stress[6] Intensity (S_m)	Yield Strength (S_y)	Ultimate Strength (S_u)		
Transfer Cask[5] Lifting Trunnions SA-564 Gr. 630[9]	70	45.0	105.0	135.0	28.3	5.89
	100	45.0	105.0	135.0	28.1	5.89
	200	45.0	97.1	135.0	27.6	5.90
	400	43.8	89.8	131.4	26.5	5.91
	500	42.8	87.0	128.5	25.8	5.91
	600	42.1	87.7	126.7	25.3	5.96
Transfer Cask Lifting Trunnion Sleeves[9] SA533 Gr. B Class 2	70	30.0	70.0	90.0	29.2	7.02
	100	30.0	70.0	90.0	29.0	7.13
	200	30.0	65.5	90.0	28.5	7.45
	400	30.0	63.2	90.0	27.4	8.01
	500	30.0	62.3	90.0	27.0	8.25
	600	30.0	61.4	90.0	26.4	8.46

Table 8.1-3
Mechanical Properties of Materials

(continued)

Material	Temperature (°F)	28 Day Compressive Strength (ksi)	Modulus of Elasticity (1.0E3 ksi)
Concrete Normal Wt.[2] 5000 psi Strength	100	5.0	4.0
	200	5.0	3.6
	300	4.8	3.3
	400	4.5	3.0
	500	4.5	2.9

Material	Temperature (°F)	Yield Strength (ksi)	Modulus of Elasticity (1.0E3 ksi)
Reinforcing Steel[2] ASTM A615 Grade 60	100	60.0	29.0
	200	57.0	28.4
	300	54.0	27.8
	400	51.0	27.3
	500	51.0	27.0

[4] Solid Neutron Shielding Material	Poisson Ratio	Compressive Strength (ksi)	Modulus of Elasticity (1.0E3 ksi)
BISCo NS-3	0.2	3.9	0.16

Table 8.1-3
Mechanical Properties of Materials

(continued)

Material	Temperature (°F)	Allowable Stress Values for Class 2[1] Components (S) (ksi)	Yield Strength[1] (ksi)
Structural Bolting Material ASTM A325	100	20.2	81.0
	200	20.2	73.9
	400	20.2	69.3
Transfer Cask Bolting Materials ASME SA-193 Grade B7	-40	25.0	105.0
	+70	25.0	105.0
	+100	25.0	98.0
	+200	25.0	94.1
	+400	25.0	91.5
	+500	25.0	88.5
	+600	25.0	85.3

Material	Yield Strength (ksi)	Tensile Strength (ksi)	Modulus of Elasticity ($1x10^6$ psi)	Coefficient of Linear Expansion (m in./in.-°F)	Approximate Melting Point (°F)
Chemical Lead	1.9	2.5	2	16.4	621

Material	Stress Properties (ksi)		Charpy V-Notch Energy (ft-lb)
	Yield Strength (S_y)	Ultimate Strength (S_u)	
Borated Stainless Steel Neutron Absorber Material ASTM A887 Type 304 B3 Grade A or B	30.0	75.0	10

Table 8.1-3
Mechanical Properties of Materials

(concluded)

(1) Steel data and thermal expansion coefficients are obtained from ASME Boiler and Pressure Vessel Code. Section III-1 Appendices. (8.3)

(2) Concrete and reinforcing steel data were obtained from Handbook of Concrete Engineering. by Mark Fintel. (8.22)

(3) Lead data was obtained from CRC Handbook of Tables for Applied Engineering Science. 2nd Edition. pp. 111 and 118. (8.4)

(4) Data obtained from manufacturers published information.

(5) Age hardened at 1150°F in accordance with note (5) of ASME Code, Appendix I, Table I-1.4.

(6) For ASME SA36. the values in this column are the allowable stress values (S) for non-integral and continuous component supports.

(7) Allowable stress values (S) and the yield strength (S_y) for SA36 steel are given in Table I-12.1 and Table I-13.1. respectively, of the ASME Boiler and Pressure Vessel Code, Section III. Division 1. Appendix I.

(8) Carbon steel DSC basket materials shall be impact tested in accordance with ASME Code Subsection NF Article NF-2300. Impact test temperature is -20°F.

(9) Carbon steel transfer cask structural shell, trunnion sleeves, and trunnion materials shall be impact tested in accordance with ASME Code Subsection NC Article NC-2300. The lowest service temperature is 0°F.

Table 8.1-4
Estimated NUHOMS®-24P Component Weights

	Component Description	Calculated Weight (Pounds)
1	Dry Shielded Canister Shell Assembly	15,625
2.	DSC Top Shield Plug Assembly	8,635
3.	DSC Internal Basket Assembly	11,970
	Total Dry DSC Empty Weight (w/o cover plate)	36,230
4	24 PWR Spent Fuel Assemblies	≤36,360
5	Weight of Water in DSC Cavity	13,900
	Total Wet DSC Loaded Weight	86,490
	Total Dry DSC Loaded Weight	72,590
6.	Transfer Cask Empty Weight	109,470(1)
7.	Transfer Cask Max. Loaded Weight	191,700(2)
8.	HSM Single Module Weight (empty)	224,000

(1) Includes weight of cask top cover plate assembly.

(2) Weight includes: DSC dry weight plus fuel, plus water in DSC and cask less DSC and cask top cover plate assemblies.

stable body as tip over does not occur until the c.g. rotates past the edge (point A in Figure 8.2-11) to an angle of more than 30.8°.

The impact force applied to the shield wall by the massive missile and the behavior of the wall is calculated in accordance with Bechtel Topical Report, "Design of Structures for Missile Impact," BC-TOP-9A (8.51).

The maximum force due to the automobile is given by:

$$F = 0.625\, v_i\, m\, g$$

Where:

v_i, m, and g are defined above.

Substituting for the design basis massive missile parameters, the maximum force due to missile impact is 458 kips applied to the end module shield wall. This force is sufficient to buckle the three top support plates provided to stabilize the shield wall. The spacer channel at the base of the module is assumed not to crush. The shield wall then acts as a simply supported slab on the top and bottom edges. For design of the shield wall reinforcement, the missile load is applied at the mid-height of the shield wall and a simple yield line failure is assumed for the full width of the wall.

For a simply supported slab with a hinge at the slab centerline, the required moment capacity is 2300 in-k/ft. The design capacity of the end shield wall is 2370 in-k/ft., which exceeds the required capacity per ACI 349-85 (8.20).

Thus, loss of bending strength of the shield wall due to a tornado missile impact is acceptable and does not affect the safe operation of the HSM. Recovery from this event can be performed in a planned and deliberate manner to replace the shield wall and support plates. This requires temporary shielding during removal and replacement of the wall, or removal of the HSM from service. At no time is there any danger of a release of radioactive materials to the general public.

8.2.2.3 Accident Dose Calculations

Each exposed component of the NUHOMS® system is specifically designed to withstand tornado generated missiles as discussed in the preceding paragraphs. The consequence of reduced shielding effects of adjacent HSMs is presented in Section 8.2.1.

8.2.2.4 Transfer Cask Missile Impact Analysis

The effects of a tornado missile impact on the loaded NUHOMS® transfer cask have been addressed in previous licensing correspondence. These documents are included in Appendix C for ease of reference.

8.2.3 Earthquake

8.2.3.1 Cause of Accident

As discussed in Section 3.2.3.1, enveloping design basis seismic forces are assumed to act on the NUHOMS® system components. For this conservative generic evaluation, the design response spectra of NRC Regulatory Guide 1.60 (8.35) are selected for the seismic analysis of the NUHOMS® system components.

8.2.3.2 Accident Analysis

As discussed in Section 3.2.3.1, and shown in Figure 8.2-2, the peak horizontal ground acceleration of 0.25g and the peak vertical ground acceleration of 0.17g are utilized for the design basis seismic analysis of the NUHOMS® components. Based on NRC Reg. Guide 1.61 (8.36), a damping value of three percent is used for the DSC seismic analysis. Similarly, a damping value of seven percent for miscellaneous steel and concrete is utilized for the HSM. An evaluation of the frequency content of the loaded HSM is performed to determine the dynamic amplification factors associated with the design basis seismic response spectra for the NUHOMS® HSM and DSC. The dominant structural frequencies calculated for a loaded HSM in the lateral direction are 17.4 Hz and 38.1 Hz for the DSC and HSM, respectively. Table 1 of NRC Regulatory Guide 1.60 requires amplification factors for these structural frequencies, which result in horizontal accelerations of 0.37g and 0.25g, respectively. The dominant vertical frequencies of the loaded HSM exceed 33 Hz, corresponding to the zero period acceleration of 0.17g vertical.

The dominant frequencies of the HSM and DSC inside the HSM are determined as part of the response spectra analysis performed using an analytical model identical to that shown in Figure 8.1-22, except that the HSM side walls are modeled as 14" thick instead of 18" thick. The thinner walls result in a lower module stiffness and a slightly reduced module mass, resulting in overall lower frequencies and therefore higher accelerations, and therefore results in a conservative analysis for the HSM with thicker side walls.

A. DSC Seismic Evaluation

As discussed above, the maximum calculated seismic accelerations for the DSC inside the HSM are 0.37g horizontally and 0.17g vertically. An analysis using these seismic

loads shows that the DSC will not lift off of the support rails inside the HSM. The resulting stresses in the DSC shell due to vertical and horizontal seismic loads are also determined and included in the appropriate load combinations. The seismic evaluation of the DSC is described in the paragraphs that follow. The DSC support structure is also subjected to the calculated DSC seismic reaction loads as discussed in Paragraph C below.

(i) DSC Natural Frequency Calculation

Two natural frequencies, each associated with a distinct mode of vibration of the DSC are evaluated. These two modes are the DSC shell cross-sectional ovalling mode, and the mode with the DSC shell bending as a beam.

a. DSC Shell Ovalling Mode

The natural frequency for the DSC shell ovalling mode is determined from the Blevins (8.37) correlation as follows.

$$f = \frac{\lambda_i}{2\pi R}\sqrt{\frac{E}{\mu\,(1 - v^2)}} \quad \text{(Blevins, Table 12-1, Case 3)} \qquad (8.2\text{-}12)$$

Where: R = 33.31 in., DSC mean radius

E = 26.5E6 psi, Youngs Modulus

υ = 0.3, Poisson's ratio

$$\lambda_i = 0.289\,\frac{t}{R}\,\frac{i(i^2 - 1)}{\sqrt{1 + i^2}} \qquad (8.2\text{-}13)$$

t = 0.625 in., Thickness of DSC shell

μ = 0.288/g, Steel mass density

The lowest natural frequency corresponds to the case when i = 2.

Hence: λ_2 = 0.0146 sec.

Substituting gives: f = 13.8 Hertz

The resulting spectral accelerations in the horizontal and vertical directions for this DSC ovalling frequency are 1.0g and 0.68g.

b. DSC Beam Bending Mode

The DSC shell is conservatively assumed to be simply supported at the two ends of the DSC. The beam bending mode natural frequency of the DSC was calculated from the Blevins correlation:

$$f_i = \frac{\lambda_i^2}{2\pi L^2}\sqrt{\frac{EI}{m}} \quad \text{(Blevins. Table 8.1. Case 5)} \qquad (8.2\text{-}14)$$

E	=	26.5E6 psi. Young's Modulus
I	=	72.900 in.^{4}, DSC moment of inertia
L	=	186.5 in., Total length of DSC
m	=	72,000/186.5g = 386/g lb./in.
λ	=	$i\pi$: for lowest natural frequency. i = 1

Substituting yields: f_1 = 62.8 Hertz.

The DSC spectral accelerations at this frequency correspond to the zero period acceleration. These seismic accelerations are bounded by those of the ovalling mode frequency that are used in the subsequent stress analysis of the DSC shell.

(ii) DSC Seismic Stress Analysis

With the DSC resting on the support rails inside the HSM. the stresses induced in the DSC shell are calculated due to the 1.0g horizontal and 0.68g vertical seismic accelerations applied as equivalent static loads. These values are conservatively increased by a factor of 1.5 to account for the effects of possible multimode excitation. The DSC stresses due to the resulting 1.0g vertical acceleration are calculated by factoring the dead load analysis results reported in Section 8.1. For the stress evaluation of the DSC shell due to seismic accelerations in the lateral direction. the resulting equivalent static acceleration of 1.5g is conservatively assumed to be resisted by one of the two support rails inside the HSM. The DSC shell stresses obtained from the analyses of vertical and horizontal seismic loads are summed absolutely. The magnitude of the combined shell stress is 18.2 ksi.

As stated. in Section 4.2.[illegible]2, an axial retainer is included in the design of the DSC support system inside the HSM to prevent sliding of the DSC in the axial direction during a postulated seismic event. The stresses induced in the DSC shell and bottom cover plate due to the restraining action of this retainer for a horizontal seismic load. applied along the axis of the DSC, are evaluated and found to be negligible.

The stability of the DSC against lifting off one of the support rails during a seismic event is evaluated by performing a rigid body analysis, using the 0.37g horizontal and 0.17g vertical input accelerations. The factor of 1.5 used in the DSC analysis to account for multimode behavior need not be included in the seismic accelerations for this analysis, as the potential for lift off is due to rigid body motion, and no frequency content effects are associated with this action. The horizontal equivalent static acceleration of 0.37g is applied laterally to the center of gravity of the DSC. The point of rigid body rotation of the DSC is assumed to be the center of the support rail, as shown in Figure 8.2-1. The applied moment acting on the DSC is calculated by summing the overturning moments. The stabilizing moment, acting to oppose the applied moment, is calculated by subtracting the effects of the upward vertical seismic acceleration of 0.17g from the total weight of the DSC and summing moments at the support rail. Since the stabilizing moment calculated below is greater than that of the applied moment, the DSC will not lift off the DSC support structure inside the HSM.

Referring to Figure 8.2-1, the margin of safety associated with DSC lift off is calculated as follows:

$$M_{am} = yF_H \qquad (8.2\text{-}17)$$

and

$$M_{sm} = (F_{v1} - F_{v2})x \qquad (8.2\text{-}18)$$

Where: M_{am} = The applied seismic moment

M_{sm} = The stabilizing moment

All other variables are defined in Figure 8.2-1.

Substituting yields: M_{am} = 861 K-in.

and M_{sm} = 1116 K-in.

Thus, the margin of safety (SF) against DSC lift off from the DSC support rails inside the HSM obtained from this bounding analysis is:

$$SF = \frac{M_{sm}}{M_{am}} = 1.30 \qquad (8.12\text{-}19)$$

B. HSM Seismic Evaluation

To evaluate the seismic response of the HSM, a dynamic response spectra analysis is performed. Seismic loads in the horizontal directions are assumed to be resisted by frame and shear wall action of the HSM. Accordingly, the HSM is modeled with plate elements

and the horizontal design b[illegible] response spectra loads are applied to the model in both horizontal directions. Similarly, the vertical response spectra load is applied to account for vertical seismic effects. Stresses resulting from the horizontal and vertical seismic response spectra include the effects of multimode excitation of the HSM. The results are included in the load combinations with the appropriate strength reduction factors. The factors used for the HSM are presented in Section 3.2.5. The load combination results for normal, off-normal, and accident conditions are presented in Section 8.2.10.

An analysis is also performed to establish the worst case factor of safety against overturning and sliding for a single, free-standing module. This analysis consists of comparing the stabilizing moment produced by the weight of the HSM and DSC, reduced by 17 percent to account for the upward vertical seismic acceleration, against the overturning moment produced by applying the 0.37g load at the centroid of the HSM and DSC. [illegible] r sliding of the HSM, the horizontal force of 0.37g acceleration is compared against the frictional resisting force of the foundation slab. In this manner, the factor of safety against sliding is established. The concrete coefficient of friction is taken as 0.6 as defined in Section 11.7.4.3 of ACI 318-83 (8.47).

The details of the seismic evaluation of the HSM are described in the paragraphs that follow.

(i) HSM Frequency Analysis

To determine the loaded HSM frequency content, an ANSYS (8.49) finite element model identical to that shown in Figure 8.1-22 is utilized as discussed previously. The lowest horizontal and vertical structural frequencies calculated for a single free standing HSM are 17.4 Hz and 40.5 Hz, respectively. The corresponding horizontal and vertical spectral accelerations are 0.37g and 0.17g. A total of 100 modes ranging in frequency from 0.7 Hz to 583 Hz are computed for the HSM.

(ii) HSM Seismic Response Spectrum Analysis

The horizontal and vertical seismic response spectra are applied to the HSM. The horizontal response spectrum is applied in two orthogonal horizontal directions. The response spectra are obtained from Regulatory Guide 1.60 (8.35) at 7% dumping, factored by the 0.25g horizontal and 0.17g vertical peak ground accelerations. The horizontal and vertical response spectra utilized in the analysis are shown in Figure 8.2-2. The HSM concrete mass participating in each mode is multiplied by the corresponding spectral acceleration value to determine the applied loads. The mass of the DSC and DSC support structure are also included in the HSM analytical model. The resulting forces and moments in the HSM walls, roof and floor of a single HSM are calculated using the linear finite element [illegible]l shown in Figure 8.1-21, and the computer program ANSYS (8.49). The model resp[illegible]s are combined in accordance with Regulatory Guide 1.92 (8.62) using the groupin[illegible] method for closely spaced modes. The directional

responses are then combined by the square root of the sum of the squares (SRSS) method. The combined maximum moments and stress are reported in Table 8.2-3.

(iii) HSM Overturning Due to Seismic

The following conservative analysis is performed to show that a single. free-standing HSM will not overturn due to seismic loads. The HSM stabilizing moment (M_{st}) is:

$$M_{st} = Wd = 17.460 \text{ K-in.}$$

Where: W and d are as defined in equation 8.2-1.

The seismic overturning moment is:

$$M_{ot} = Wa_v d + Wa_h h = 13.800 \text{ K-in.}$$

Where: M_{ot} = Overturning moment

a_v = 0.17g, Maximum vertical seismic acceleration

a_h = 0.37g, Maximum horizontal seismic acceleration

h = 97.3 in., Vertical height from HSM and DSC center of gravity to base

The result of this analysis indicates that a single .free-standing HSM will not overturn during a seismic event. The margin of safety against overturning is 1.26.

(iv) HSM Sliding Due to Seismic

To show that a single free-standing HSM will not slide due to the postulated horizontal and vertical seismic accelerations. the following conservative analysis is performed. The friction force resisting sliding (F_{sl}) is:

$$F_{sl} = W\mu g = 150 \text{ kips} \qquad (8.2\text{-}24)$$

W = HSM loaded weight = 301 kips

μ = Coefficient of friction between the HSM concrete walls and the floor slab foundation = 0.6

g = Net downward gravitational force

$$= (1 - 0.17)g \text{ or } 0.83g$$

The applied horizontal seismic force is:

$$F_{hs} = Wa_H = 111 \text{ kips}$$

Where: F_{hs} = Induced horizontal seismic force

a_H = 0.37g, Horizontal seismic acceleration

The force required to slide the HSM is larger than the resulting lateral seismic force and therefore, the HSM will not slide. The factor of safety against sliding is 1.35.

C. DSC Support Structure Seismic Evaluation

(i) DSC Support Structure Natural Frequency

The lowest structural frequency of the DSC support structure inside the HSM is dominated by the mass of the DSC. The DSC and support structure are included in the HSM analytical model. The dominant horizontal and vertical frequencies of the DSC/DSC support structure are 17.4 Hz and 40.5 Hz. respectively.

(ii) DSC Support Structure. Seismic Response Spectra Analysis

The horizontal and vertical seismic response spectra accelerations are applied to the support structure as previously described for the HSM. The modal summations and directional summations are also the same. For the support frame cross members. the maximum bending stress is 2.57 ksi and the maximum shear stress is 5.72 ksi. Similarly, the maximum stresses in the support rails are 1.85 ksi and 0.56 ksi. respectively. These compare with Code allowables of 33.6 ksi for bending and 17.8 ksi for shear and, as a result. have a considerable design margin.

The effect of concentrated anchor bolt forces is included in the design of the DSC support structure connection details. Similarly, each connection of the support rails to the support frame cross members is designed for the resulting seismic loads. This condition envelopes all other loading conditions for the individual bolts or structural elements of the DSC support structure.

The stresses in the support frame columns, cross members and rails due to seismic accelerations are included in the subsequent load combination results reported in Section 8.2.10.

(iv) DSC Axial Retainer Analysis

The DSC axial retainer detail, located inside the HSM access opening, is shown on the Appendix E drawings. The retainer bears on the end of the DSC and transfers axial seismic loads to a pipe member that is inserted into the HSM access opening door. The DSC axial retainer is bolted in place following transfer of the DSC to the HSM and placement of the shielded door.

The clearance between the DSC axial retainer and the DSC is designed for the maximum DSC thermal growth that occurs during the postulated HSM blocked vent case, as discussed in Section 8.2.7. During normal storage there is a small (1/8 to 1/4 inch) gap that will allow movement of the DSC relative to the HSM. This motion produces a small

increase in the DSC axial force due to seismic loads, and has been included in the design of the DSC.

The ANSYS HSM finite element model includes the axial retainer and the DSC rail stops. The resulting axial forces in the retainer and rail stops calculated in the response spectra analysis are combined and applied to the axial retainer. The total resulting force is 35.1 kips. An impact factor of 1.5 was also applied to this force to account for the impact due to the small gap between the DSC and the axial retainer. The total design lateral force, therefore, is equal to:

$$F_{seismic} = \text{Retainer force} \times 1.5$$

$$= 35.1 \text{ kips} \times 1.5$$

$$= 52.7 \text{ kips}$$

The controlling design element in the axial retainer is the bolted connection to HSM shielded door. The maximum tensile force on these bolts calculated above is less than the allowable tensile force of 62.8 kips.

D. Transfer Cask Seismic Evaluation

The effects of a seismic event occurring when a loaded DSC is resting inside the transfer cask are conservatively postulated for two conditions that affect the transfer cask. All other conditions that exist during DSC loading or transport operations are enveloped by the two cases postulated. The first case postulates a fully loaded transfer cask standing vertically in the plant's cask decontamination area during closure of the DSC. For this condition it is required that the transfer cask remain upright. The rigid body horizontal acceleration required to overturn a loaded transfer cask at a minimum gross weight of 190 kips is at least 0.40g. Each licensee shall ensure that the transfer cask is not subjected to accelerations greater than this magnitude while in the plant's decontamination area, or provide sufficient lateral restraint to prevent cask overturning.

The second case postulates a seismic event occurring during transport of a loaded DSC, resting inside the transfer cask, in a horizontal position, secured to the support skid/transport trailer. This load case is conservatively enveloped by the postulated normal transport load accelerations of $\pm$ 0.5g acting in the vertical, axial, and transverse directions, applied simultaneously at the center of gravity of the transfer cask, as specified in Section 8.1.1.8. These accelerations envelope those that would result from a seismic event in the highly unlikely event that a design basis earthquake would occur during transport of the loaded DSC to or from the HSM. Therefore, the calculated stress intensities for the normal transport loads case of 4.1 ksi for the cask structural shell, and

2.0 ksi for the trunnions, are conservatively used as the maximum seismic stresses in the load combination results reported in Section 8.2.10.

The stabilizing moment to prevent overturning of the cask/trailer assembly due to the 0.25g horizontal and 0.17g vertical seismic ground accelerations is calculated and compared to the dead weight stabilizing moment. The results of this analysis show that there is a factor of safety of at least 2.0 against overturning that ensures that the cask/trailer assembly has sufficient margin for the design basis seismic loading.

8.2.3.3 Accident Dose Calculations

The NUHOMS® system components are conservatively designed and analyzed to withstand the forces generated by a postulated design basis earthquake accident. Hence, there are no dose consequences resulting from an earthquake.

8.2.4 Flood

8.2.4.1 Cause of Accident

Flooding conditions simulating a range of flood types, such as tsunami and seiches as specified in 10CFR72.122(b) are considered. In addition, floods resulting from other sources, such as high water from a river or a broken dam, are postulated as the cause of the accident.

8.2.4.2 Accident Analysis

Since the source of flooding is site specific, the exact source, or quantity of flood water, should be established by the licensee. However, for this generic evaluation of the DSC and HSM, bounding flooding conditions are specified that envelop those that are postulated for most plant sites. As described in Section 3.2, the design basis flooding load is specified as a 50 foot static head of water and a maximum flow velocity of 15 feet per second. Each licensee should confirm that this represents a bounding design basis for their specific ISFSI site.

A. HSM Flooding Analysis

Since the HSM is open to the atmosphere, external pressure due to flooding is not a design load for the HSM.

The maximum drag force acting on the HSM due to a 15 fps flood water velocity is calculated by the Streeter and Wylie (8.38) correlation:

$$F = \frac{v^2}{2g} C_D A \rho_w = 6.600 \text{ lbs./ft. length of HSM} \quad (8.2\text{-}26)$$

Where:

v	=	15 fps. Flood water velocity
C_D	=	2.0. Drag coefficient for flat plate
A	=	15.0 ft.^{2}. HSM area per foot length
ρ_w	=	62.4 lb./ft.^{3}. Flood water density
F	=	Drag force (lb.)
g	=	32.2 ft./s^2

The resulting flood induced pressure loading of 6.6 K/ft. length is assumed to be applied normally to the end module shield wall of a stand-alone HSM. This loading is comparable in magnitude to the tornado wind pressure loading and produces a maximum flood induced moment of 92.5 K-in./ft. This result compares with the calculated ultimate strength capacity of the end module shield wall at 150°F of 2370 K-in./ft., as shown in Section 8.2.2.2.

(i) HSM Overturning Analysis

The factor of safety against overturning, for the postulated flooding conditions specified in Section 3.2. is calculated by summing moments about the bottom outside corner of a single. free-standing HSM. A net weight of 183 kips for a loaded HSM plus 47.5 kips for the upstream end shield wall. including buoyancy effects. is used to calculate the stabilizing moment resisting the overturning moment applied to the HSM by the flood water drag force. The stabilizing moment is:

$$M_{st} = 183 \times 4.83 \text{ ft.} + 47.5 \times 11.2 \text{ ft.} \quad (8.2\text{-}27)$$
$$= 1{,}414 \text{ K-ft.}$$

The maximum drag force due to the postulated water current velocity of 15 fps is derived from Equation 8.2-26 as 6.6 k/ft. acting over the entire height and width of an end shield wall of a single free-standing HSM. Therefore, the overturning moment due to the postulated flood current is:

$$M_{ot} = 6.6 \text{ k/ft.} \times 18.08 \text{ ft.} \times 7.5 \text{ ft.} \quad (8.2\text{-}28)$$
$$= 895 \text{ K-ft.}$$

The factor of safety (F.S.) against overturning for a single, free-standing HSM due to the postulated design basis flood water velocity is given by:

$$F.S. = \frac{M_{st}}{M_{ot}} = 1.58$$

(ii) HSM Sliding Analysis

The factor of safety against sliding of a free-standing single HSM due to the maximum postulated flood water velocity of 15 fps is calculated using methods similar to those described above. The effective weight of the HSM including the DSC and end shield wall acting vertically downward, less the effects of buoyancy acting vertically upward is 230k. The friction force resisting sliding of the HSM is equal to the product of the net weight of the HSM and DSC and the coefficient of friction for concrete placed against a roughened concrete surface such as that between the HSM and basemat, which is 0.6 as specified in ACI 349-85 (8.20). Therefore, the force resisting sliding of the HSM is 0.6 x 230 or 138 kips. As shown in the previous flooding calculations the drag force acting on a single HSM is 6.6 kips/ft., or 119.3 kips total acting on the side wall of a single HSM, due to a flood velocity of 15 fps. The resulting factor of safety against sliding of a single free standing HSM due to the design basis flood water velocity is 1.16.

B. DSC Flooding Analyses

The DSC is evaluated for the design basis fifty foot hydrostatic head of water producing external pressure on the DSC shell and outer cover plates. To conservatively determine design margin which exists for this condition, the maximum allowable external pressure on the DSC shell is calculated for Service Level A stresses using the methodology presented in NB-3133.3 of the ASME Code (8.3). The resulting allowable pressure of 63.6 psi is 2.9 times the maximum external pressure of 21.7 psi due to the postulated fifty foot flood height. Therefore, buckling of the DSC shell will not occur under the worst case external pressure due to flooding.

The DSC shell stresses for the postulated flood condition are determined using the ANSYS analytical model shown in Figure 8.1-14. The 21.7 psig external pressure is applied to the model as a uniform pressure on the outer surfaces of the top cover plate, DSC shell and bottom cover plate. The maximum DSC shell primary membrane stress intensity for the 21.7 psi external pressure is 1.2 ksi which is considerably less than the Service Level C allowable primary membrane stress of 21.0 ksi. The maximum stress in the flat heads of the DSC occurs in the bottom cover plate. The maximum membrane plus bending stress in the bottom cover plate is 0.4 ksi. This value is considerably less than the ASME Service Level C allowable of 29.1 ksi for primary bending. These stresses are combined with the appropriate loads to formulate load combinations. The resulting total stresses for the DSC are reported in Section 8.2.10.

8.2.4.3 Accident Dose Calculations

The radiation dose due to flooding of the HSM is negligible. The radioactive material inside the DSC will remain sealed in the DSC and, therefore, will not contaminate the encroaching flood water. The minimal amount of contamination that may be on the outside surface of the DSC (see Section 3.3.7.1) is not sufficient to be a radiological hazard if it were to be washed off the DSC outer surface.

8.2.4.4 Recovery

Because of the location and geometry of the HSM vents, it is unlikely that any significant amount of silt would enter an HSM should flooding occur. Any silt deposits would be removed using a pump suction hose or fire hose inserted through the inlet vent to suck the silt out, or produce a high velocity water flow to flush the silt through the HSM inlet vents.

8.2.5 Accidental Cask Drop

This section addresses the structural integrity of the standardized NUHOMS® on-site transfer cask, the DSC and its internal basket assembly when subjected to postulated cask drop accident conditions.

8.2.5.1 Cause of Accident

A. Cask Handling and Transfer Operation

As described in Section 5.0, all handling operations involving hoisting and movement of the on-site transfer cask and DSC are performed inside the plant's fuel handling building. These include utilizing the crane for placement of the DSC into the cavity of the transfer cask, lifting the transfer cask/DSC into and out of the plant's spent fuel pool, and placement of the transfer cask/DSC onto or off of the transport skid/trailer. An analysis of the plant's lifting devices used for these operations, such as the crane and lifting yoke, is needed to address a postulated drop accident for the transfer cask and its contents. The postulated drop accident scenarios should be consistent with those currently addressed in the plant's 10CFR50 licensing basis for handling of a shipping cask. Such postulated accidents are plant specific and should be addressed by the licensee.

Once the transfer cask is loaded onto the transport skid/trailer and secured, it is pulled to the HSM site by a tractor vehicle. A predetermined route is chosen to minimize the potential hazards that could occur during transport. This movement is performed at very low speeds. System operating procedures and technical specification limits defining the safeguards to be provided ensure that the system design margins are not compromised. As a result, it is highly unlikely that any plausible incidents leading to a transfer cask drop

8.2.6.2 Analysis of Effects and Consequences

Should lightning strike in the vicinity of the HSM the normal storage operations of the HSM will not be affected. The current discharged by the lightning will follow the low impedance path offered by the surrounding structures. Therefore, the HSM will not be damaged by the heat or mechanical forces generated by current passing through the higher impedance concrete. Since the HSM requires no equipment for its continued operation, the resulting current surge from the lightning will not affect the normal operation of the HSM.

Since no off-normal condition will develop as the result of lightning striking in the vicinity of the HSM, no corrective action would be necessary. Also, there would be no radiological consequences.

8.2.7 Blockage of Air Inlet and Outlet Openings

This accident conservatively postulates the complete blockage of the HSM ventilation air inlet and outlet openings on the HSM side walls.

8.2.7.1 Cause of Accident

Since the NUHOMS® HSMs are located outdoors, there is a remote probability that the ventilation air inlet and outlet openings could become blocked by debris from such unlikely events as floods and tornadoes. The NUHOMS® design features such as the perimeter security fence and the redundant protected location of the air inlet and outlet openings reduces the probability of occurrence of such an accident. Nevertheless, for this conservative generic analysis, such an accident is postulated to occur and is analyzed.

8.2.7.2 Accident Analysis

The structural consequences due to the weight of the debris blocking the air inlet and outlet openings are negligible and are bounded by the HSM loads induced for a postulated tornado (Section 8.2.2) or earthquake (Section 8.2.3).

The thermal effects of this accident result from the increased temperatures of the DSC and the HSM due to blockage of the ventilation air inlet and outlet openings. The heat generated in the DSC is conservatively assumed to be contained entirely within the DSC and HSM throughout this postulated accident. The spacing of the adjacent HSMs is assumed to be unaffected and the HSM front and roof birdscreens are assumed to be open to ambient. The accident duration is assumed to be five days, at which time the air inlet

and outlet opening obstructions would be cleared by site personnel and natural circulation air flow restored to the HSM.

Based on previous NUHOMS® system design experience, it is concluded that heat-up of the spent fuel, DSC and HSM are limited by the heat up of the HSM. The spent fuel assemblies and the DSC quickly rise in temperature to the level required to radiate and conduct the 24 kW of decay heat to the HSM internal surfaces. However, the HSM surface heat up is limited by the heat up of the entire HSM. Because the heat up rate of the HSM is much lower than that of the DSC, or the spent fuel, the DSC can be assumed to be at steady state at any instant in time and transferring 24 kW of heat to the HSM. The HSM internal surface temperatures are limited by the heat up of the total quantity of concrete behind the surface. Therefore, applying a constant heat flux to the HSM concrete and calculating the time dependent temperature distributions through the concrete, the surface temperature of the concrete as a function of time is obtained. Using the calculated HSM surface temperatures, the maximum DSC and fuel cladding temperatures are determined.

A thermal transient analysis of the HSM for the blocked vent condition is performed using a control volume model of the HSM internal air space and the surrounding concrete walls, roof, and floor. The first law of thermodynamics is used to obtain an energy balance equation that is solved using a forward finite differencing scheme with a sufficiently small time step to ensure the accuracy of the solution. The initial conditions for the analysis correspond to the steady state temperatures calculated for the off-normal analysis cases with an ambient temperature of 125°F. The heat source included in the analysis is the 24 kW decay heat rejected from the surface of the DSC. The solution is carried out to five days at that time it is assumed that corrective action would be completed and natural circulation air flow restored to the HSM. The change in temperature with time after vent opening blockage for the HSM roof interior surface is shown in Figure 8.2-16.

At the end of the five days required to clear the inlets and outlets, the maximum HSM inside surface is 479°F, and the DSC surface temperature is 579°F to radiate the decay heat from the spent fuel assemblies. Using the HEATING6 models of the DSC and its internals described in Section 8.1.3, the maximum fuel cladding temperatures for this case are calculated to be 836°F (447°C) for the PWR fuel and 923°F (495°C) for the BWR fuel. The fuel clad temperature at the start of the blocked vent transient for the 125°F extreme ambient temperature case are calculated to be less than 705°F (374°C) for the PWR fuel and 793°F (423°C) for the BWR fuel. The maximum fuel clad temperature as a function of time is expected to vary linearly between these two temperature values. The resulting temperatures are well below the fuel cladding short term temperature limit of 570°C.

These temperatures are below the levels that safety impairing damage would occur to the HSM or DSC. The short time exposure of the DSC and the spent fuel assemblies to the elevated temperatures will not cause any damage or result in the release of radioactivity. The maximum DSC internal pressure during this event is 10.5 psig for the PWR fuel and 10.0 psig for the BWR fuel (assuming that no fission and fill gas is released). If the fission

and fill gases are released from the spent fuel rods, the DSC internal pressures would be 50.0 psig (PWR) and 26.9 psig (BWR) as shown in Tables 8.1-6 and 8.1-7. This pressure is considered the design basis accident pressure for analysis of the DSC.

The thermal-induced stresses for the blocked vent case are calculated using the HSM structural models shown in Figure 8.1-23 and 8.1-24 as discussed in Section 8.1.1.5, paragraphs C and E. The non-linear transient thermal gradients are converted to equivalent linear gradients in accordance with the guidelines of ACI 349 Appendix A. The worst case equivalent linear thermal gradients are then applied to the Figure 8.1-23 and 8.1-24 computer models to calculate the elastic forces and moments induced. The resulting elastic forces and moments are modified to account for the concrete cracked section properties in accordance with ACI 349 Appendix A, and combined with the calculated forces and moments from other loads.

8.2.7.3 Accident Dose Calculations

There are no off-site dose consequences as a result of this accident. The only significant dose increase is that related to the recovery operation where it is conservatively estimated that the on-site workers will receive an additional dose of no more than one man-rem during the eight hour period it is estimated may be required for removal of the debris from the air inlet and outlet openings in HSM.

8.2.7.4 Recovery

Debris removal is all that is required to recover from a postulated blockage of the HSM ventilation air inlets and outlets. Cooling will begin immediately following removal of the debris from the inlets and outlets. The amount and nature of debris can vary, but even in the most extreme case, manual means or readily available equipment can be used to remove debris.

The debris is conservatively assumed to remain in place for 5 days as described in Section 8.2.7.2. The last eight hours of this period are assumed to be the time required to completely remove all debris and the natural circulation air flow to be restored.

8.2.8 DSC Leakage

The DSC shell is designed as a pressure retaining containment boundary to prevent leakage of contaminated materials, as discussed in Section 8.1.1.1, paragraph B. The analyses of normal, off-normal, and accident conditions have shown that no credible conditions can breach the DSC shell or fail the double seal welds at each end of the DSC. However, for this conservative generic evaluation, a total and complete instantaneous leak from the DSC is postulated.

Rancho Seco

Independent Spent Fuel Storage Installation

Final Safety Analysis Report
Volume IV
Calculations and Drawings
Volume 1 of 2

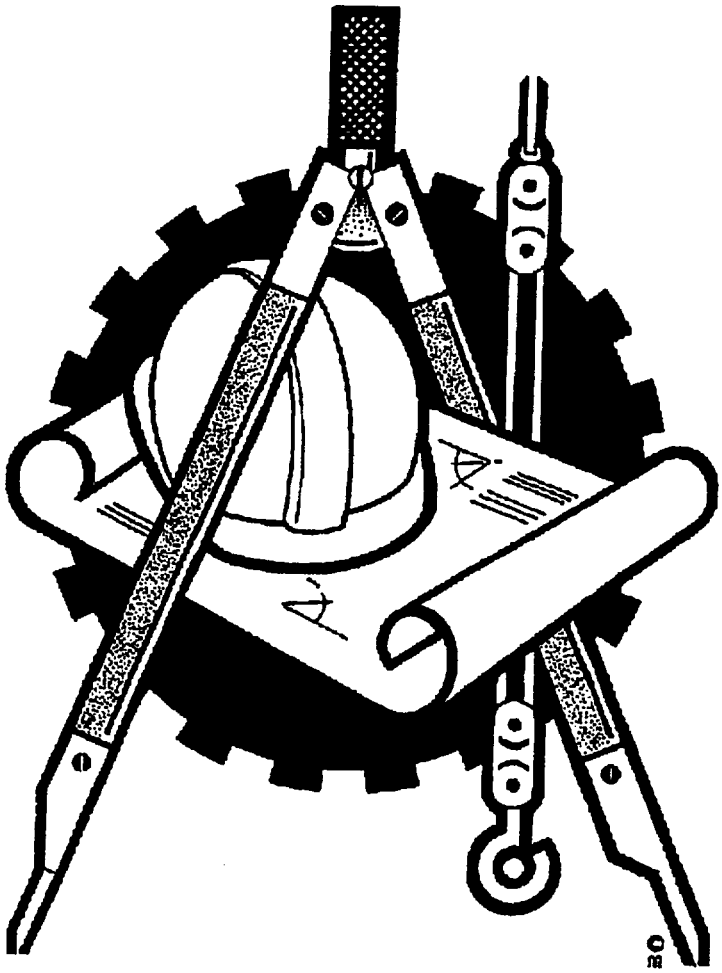

SMUD
Sacramento Municipal Utility District

AFFIDAVIT PURSUANT
TO 10 CFR 2.790

Transnuclear West Inc.)
State of California) SS.
County of Alameda)

I, Robert M. Grenier, depose and say that I am President and Chief Operating Officer of Transnuclear West Inc., duly authorized to make this affidavit, and have reviewed or caused to have reviewed the information which is identified as proprietary and referenced in the paragraph immediately below. I am submitting this affidavit in conformance with the provisions of 10 CFR 2.790 of the Commission's regulations for withholding this information.

The information for which proprietary treatment is sought is contained in the calculation packages and drawings listed below:

CALCULATION PACKAGES

File #	Revision #	Title
2069.02XX	—	**Project Structural Calculations**
2069.0200	0	NUHOMS®MP187 FO-DSC 10CFR72 Structural Analysis
2069.0201	3	NUHOMS®MP187 FO-DSC 10CFR72 Structural Analysis
2069.0202	2	SMUD HSM 10CFR72 Structural Analysis – Pre-fab. Modules for Onsite Conditions
2069.0203	2	NUHOMS®MP187 Cask 10CFR72 Structural Analysis - NDP Cask for Onsite Load Conditions
2069.0204	7	NUHOMS®MP187 Guide Sleeve Structural Analysis
2069.0205	3	NUHOMS®MP187 FF-DSC 10CFR72 StructuralAnalysis
2069.0214	2	Cask/HSM Restraint System Structural Analysis
2069.0216	2	Rancho Seco NUHOMS® Short Cavity (FO) Dry Shielded Canister Shell Assembly Structural Analysis
2069.0217	0	FO/FC Dry Shielded Canister Basket Assembly Structural Analysis
2069.0219	1	Long Cavity (FC/FF) Dry Shielded Canister Shell Assembly Structural Analysis
2069.0220	3	Lead Shield Plug Evaluation for SMUD FC/FF DSC Calculation

2069.04XX	—	**Project Thermal Calculations**
2069.0400	3	Rancho Seco HSM Thermal Analysis
2069.0401	4	MP187 Cask Thermal Analysis for Onsite Transfer and Storage Conditions
2069.0402	1	Fire Analysis for the Rancho Seco ISFSI During Transfer, Loading and Storage Conditions
2069.0453	4	MP187 Cask Peak Pressure Calculation for DSC Cavity and Cask DSC Annulus During Storing DSC
NUH005.0450	0	Dry Storage Clad Temperature Acceptance Limit for Rancho Seco Fuel Assemblies
2069.05XX	—	**Project Shielding Calculations**
2069.0500	1	Radiological Source Term Calculation for Rancho Seco fuel
2069.0501	2	Rancho Seco Shielding Material Densities Calculation
2069.0502	4	Rancho Seco Site Dose Calculation
2069.0503	2	Rancho Seco Occupational Exposure Calculation
2069.0505	2	Rancho Seco Fission Gas Release Dose Assessment
2069.0507	0	Rancho Seco NUHOMS® DSC Confinement Evaluation

DRAWINGS

Drawing #	Revision #	Title
NUH-05-4001	13	NUHOMS®MP187 Multi-purpose Cask Main Assembly (six sheets)
NUH-05-4003	8	NUHOMS®MP187 Multi-purpose Cask Onsite Transfer Arrangement (two sheets)
NUH-05-4004	13	NUHOMS® FO-DSC and FC-DSC for PWR Fuel Main Assembly (four sheets)
NUH-05-4005	11	NUHOMS® FF-DSC for PWR Fuel Main Assembly (four sheets)

These documents have been appropriately designated as proprietary.

I have personal knowledge of the criteria and procedures utilized by Transnuclear West Inc. in designating information as a trade secret, privileged or as confidential commercial or financial information.

Pursuant to the provisions of paragraph (b) (4) of Section 2.790 of the Commission's regulations, the following is furnished for consideration by the Commission in determining whether the information sought to be withheld from public disclosure, included in the above referenced document, should be withheld.

1) The information sought to be withheld from public disclosure are licensing drawings and calculations of a concrete modular storage and transportation system, which is owned and has been held in confidence by Transnuclear West Inc.

2) The information is of a type customarily held in confidence by Transnuclear West Inc. and not customarily disclosed to the public. Transnuclear West Inc. has a rational basis for determining the types of information customarily held in confidence by it.

3) The information is being transmitted to the Commission in confidence under the provisions of 10 CFR 2.790 with the understanding that it is to be received in confidence by the Commission.

4) The information, to the best of my knowledge and belief, is not available in public sources, and any disclosure to third parties has been made pursuant to regulatory provisions or proprietary agreements which provide for maintenance of the information in confidence.

5) Public disclosure of the information is likely to cause substantial harm to the competitive position of Transnuclear West Inc. because:

   a) A similar product is manufactured and sold by competitors of Transnuclear West Inc.

   b) Development of this information by Transnuclear West Inc. required thousands of man-hours and hundreds of thousands of dollars. To the best of my knowledge and belief, a competitor would have to undergo similar expense in generating equivalent information.

   c) In order to acquire such information, a competitor would also require considerable time and inconvenience related to the development of a design and analysis of a dry spent fuel storage system.

   d) The information required significant effort and expense to obtain the licensing approvals necessary for application of the information. Avoidance of this expense would decrease a competitor's cost in applying the information and marketing the product to which the information is applicable.

   e) The information consists of description of the design and analysis of a dry spent fuel storage and transportation system, the application of which provides a competitive economic advantage. The availability of such information to competitors would enable them to modify their product to better compete with Transnuclear West Inc., take marketing or other actions to improve their product's position or impair the position of Transnuclear West's product, and avoid developing similar data and analyses in support of their processes, methods or apparatus.

   f) In pricing Transnuclear West's products and services, significant research, development, engineering, analytical, licensing, quality assurance and other costs and expenses must be included. The ability of Transnuclear West's

competitors to utilize such information without similar expenditure of resources may enable them to sell at prices reflecting significantly lower costs.

Further the deponent sayeth not.

Original signed by
Robert M. Grenier

Robert M. Grenier
President and Chief Operating Officer
Transnuclear West Inc.

Subscribed and sworn to me before this 20th day of November, 2000, by Robert M. Grenier.

SHANNON L. CHRISTENSEN
COMM. # 1284195
NOTARY PUBLIC-CALIFORNIA
ALAMEDA COUNTY
COMM. EXP. MAY 18, 2004

Notary Public