CPL-2165
S-0550

REPLACES DWG. NO. SFD-1985-M-050

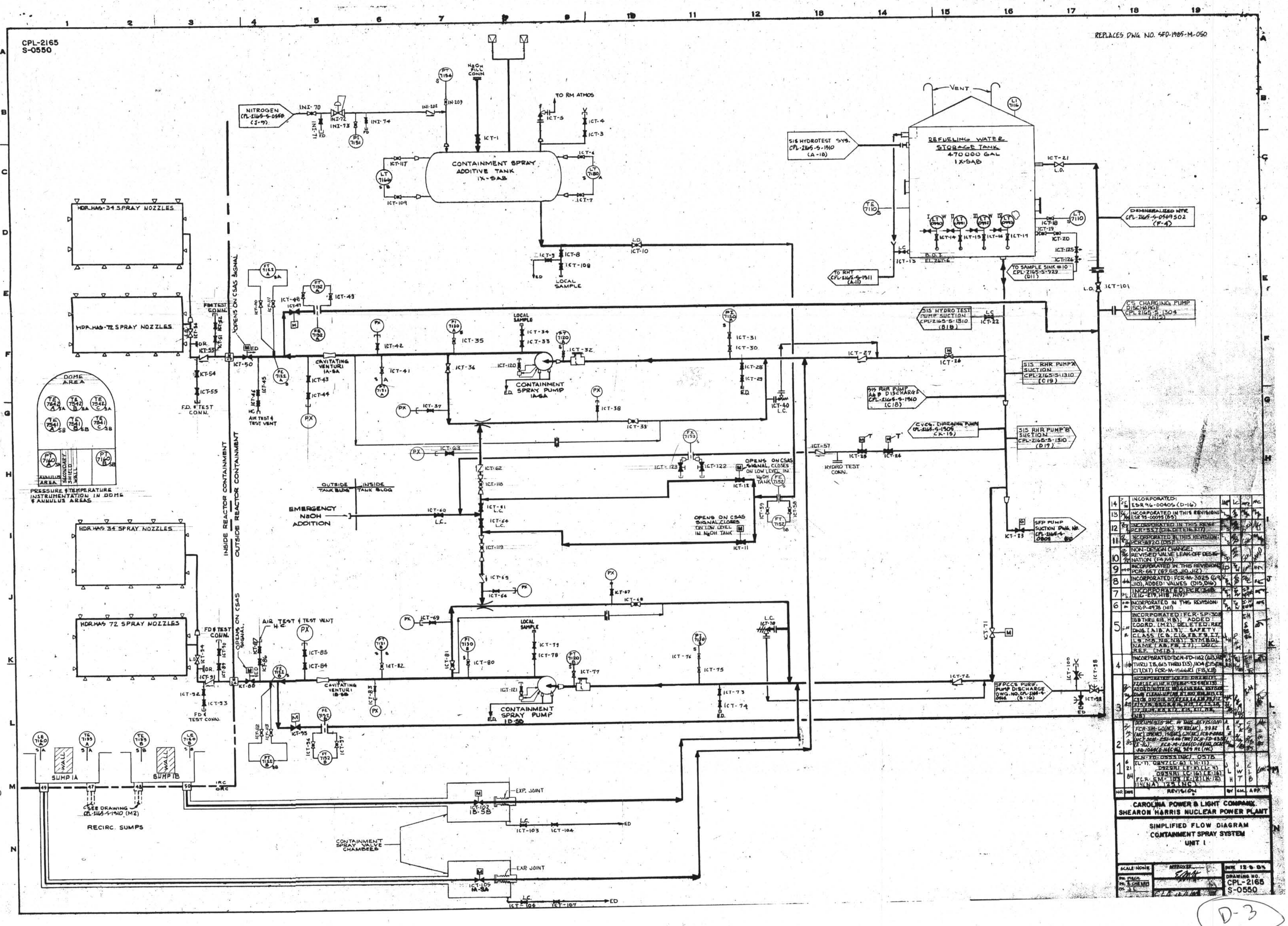

14	2/5/96	INCORPORATED: ESR 96-00405 (D-16)				
13	7/1/95	INCORPORATED IN THIS REVISION: ESR 95-00095 (B-2)				
12	4/21/94	INCORPORATED IN THIS REVISION: PCR-557 (C16, D17, E16, E17)				
11	7/1/92	INCORPORATED IN THIS REVISION: PCR-892 (D15)				
10	7/1/92	NON-DESIGN CHANGE: REVISED VALVE LEAK-OFF DESIGNATION (F4, K4)				
9	4/1/91	INCORPORATED IN THIS REVISION: PCR-667 (B7, G13, J10, J12)				
8	4/1/90	INCORPORATED: FCR-M-3025 (G9, J10), ADDED: VALVES (D15, D16)				
7	2/5/88	INCORPORATED: FCR-3148 (E16-E19, H18, H19)				
6	2/8/86	INCORPORATED IN THIS REVISION: FCR-P-4978 (H11)				
5	1/11/86	INCORPORATED: FCR-SP-308 (B8 THRU B18, H8, H9); ADDED: COORD. (M2); DELETED: REF DWG. (A18, A19); SAFETY CLASS (C8, C16, F8, F9, I7, L9, M8, N8, N9); SYMBOL NAME (A8, F8, I7); DOC. REF. (M18)				
4	1/1/85	INCORPORATED: DCN-FD-1182 (G8, H9 THRU I8, G13 THRU I15), H104 (C15, C17, D17); FCR-M-1566R1 (F8, K8)				
3	7/1/84	INCORPORATED: DCN-FD-1182 (F8, F9, G7, H7, H8, H9, J8, K8, L8, M8, N8); ADDED: SYMBOL, REVISED SYMBOL, DWG. (CLEAN-UP) (A7, B10, B18, B19, C7, C8, D10, D18, D19, E7, E8, E14, E18, F8, F17, F18, G8, G9, G17, G18, H7, H8, H9, H17, H18, I8, J8, K8, L8, M8, N8)				
2	2/1/83	DOCUMENTS INC. IN THIS REVISION: FCR-SM-60 (NC), 78 REV (NC), 79 REV (NC), 198 (NC), 198 (NC), 211 (NC), FCR-P-2082 (NC), DCN-2561-4-84 (NC), DCN-FD-1130 (E-16), FCR-M-1345 (C-14, H10, D-12), FD-1069 (B-14, C-14), 369 REV (NC)				
1	6/21/84	DCN: FD-0553 (NC), 0578 (L-11), 0847 (C-6) (H-11), 0929 R1 (E-8) (L-4), 0959 R1 (K-6) (E-16), FCR-SM-103 (K-2) (K-12), 114 (NA), 125 (NC)	J. L. H.	J. W. T.	E. L. B.	
NO.	DATE	REVISION	BY	CHK.	APP.	

CAROLINA POWER & LIGHT COMPANY
SHEARON HARRIS NUCLEAR POWER PLANT

SIMPLIFIED FLOW DIAGRAM
CONTAINMENT SPRAY SYSTEM
UNIT 1

SCALE: NONE | APPROVED | DATE 12-8-83
DR. | CHECK | DR. | DRAWING NO. CPL-2165 S-0550

D-3