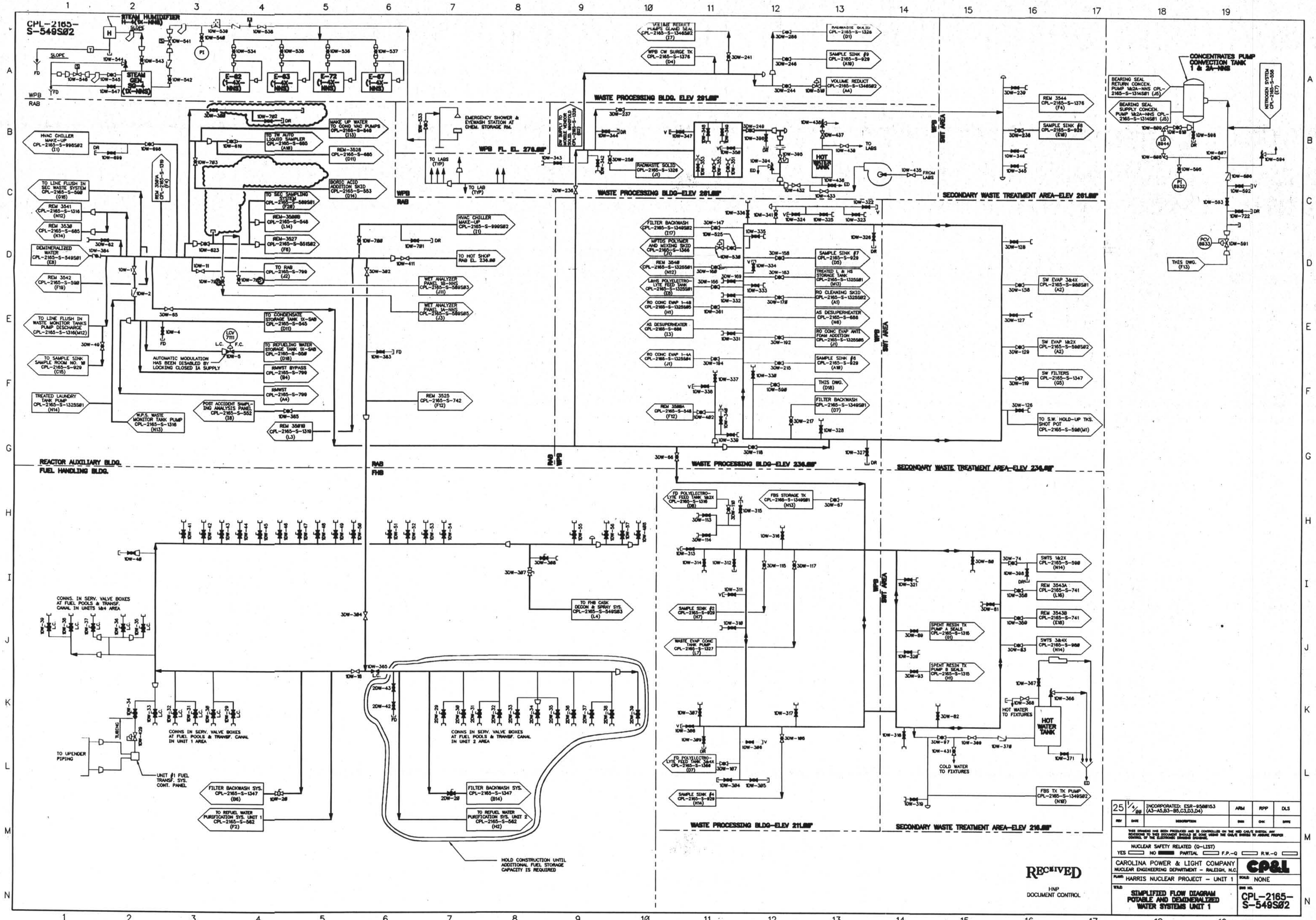

REV	DATE	DESCRIPTION	DRN	CHK	APPR
25	1/1/89	INCORPORATED: ESR-95081S3 (A3-A5,B3-B5,C3,D3,D4)	ARM	RPP	DLS

THIS DRAWING HAS BEEN PRODUCED AND IS CONTROLLED ON THE MED CAD/E SYSTEM. ANY REVISIONS TO THIS DOCUMENT SHOULD BE DONE USING THE CAD/E SYSTEM TO ASSURE PROPER CONTROL OF THE ELECTRONIC DRAWING DATABASE.

NUCLEAR SAFETY RELATED (Q-LIST)
YES ____ NO ____ PARTIAL ____ F.P.-Q ____ R.W.-Q ____

CAROLINA POWER & LIGHT COMPANY
NUCLEAR ENGINEERING DEPARTMENT - RALEIGH, N.C.

CP&L

PLANT: HARRIS NUCLEAR PROJECT - UNIT 1
SCALE: NONE

TITLE: SIMPLIFIED FLOW DIAGRAM POTABLE AND DEMINERALIZED WATER SYSTEMS UNIT 1

DWG NO. CPL-2165-S-549S02

RECEIVED
HNP
DOCUMENT CONTROL

D-2A