CPL-2165
S-0805

REPLACES DRAWING SFD-1985-M-305

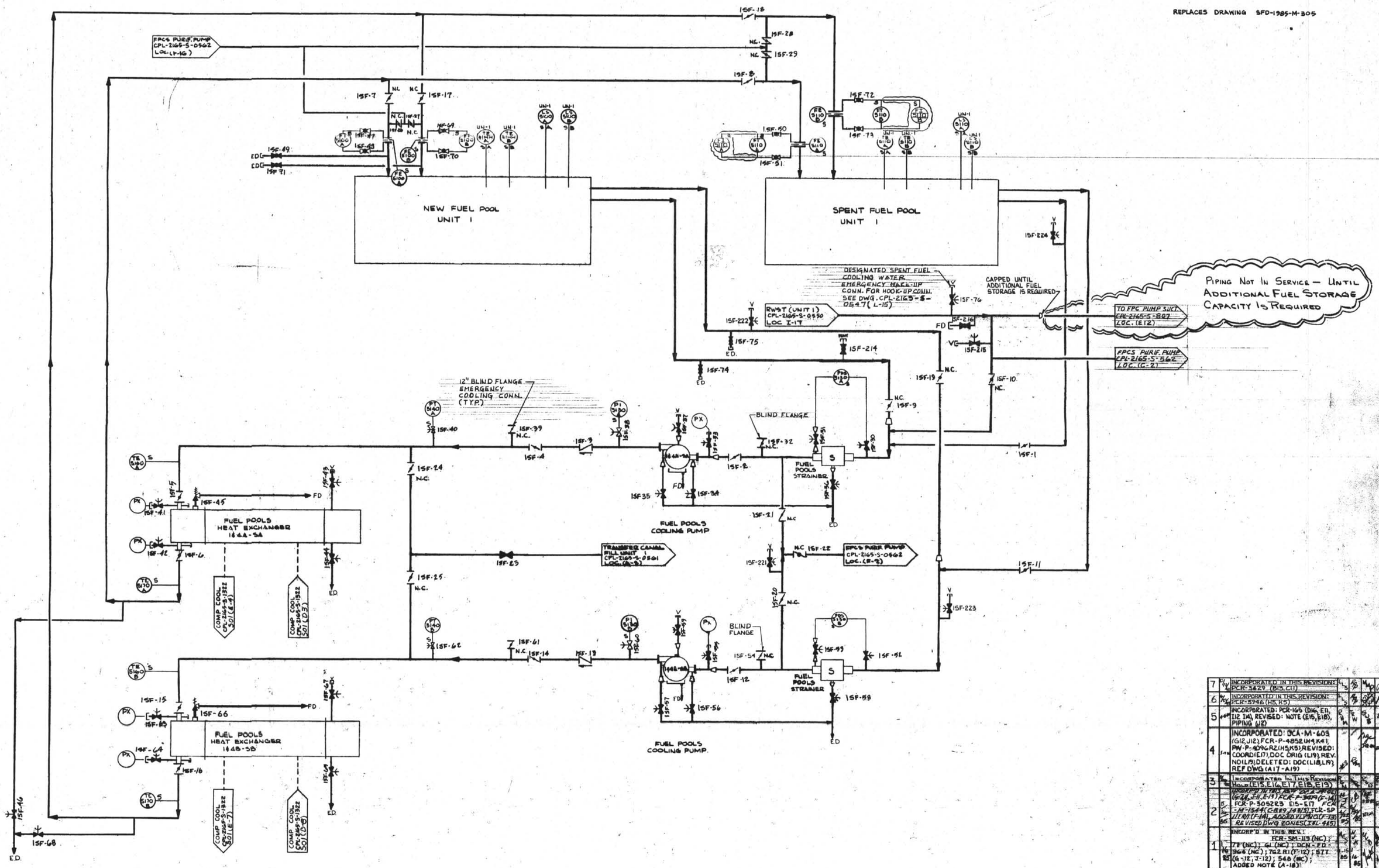

NO.	DATE	REVISION	BY	CH.	APP.
7	9/94	INCORPORATED IN THIS REVISION: PCR-3429 (B15, C11)	LS	SP	MP
6	9/94	INCORPORATED IN THIS REVISION: PCR-5946 (H5, K5)	LS	SP	MP
5	4-89	INCORPORATED: PCR-165 (DIG. E11, I12, I14), REVISED: NOTE (E15, E18), PIPING (J12)	RM	RW	RB
4	1-89	INCORPORATED: DCA-M-609 (G12, J12) FCR-P-4852 (H4, K4) PW-P-4096 RZ (H5, K5) REVISED: COORD (E17), DOC ORIG (L19), REV. NO (L19) DELETED: DOC (L18, L19) REF DWG (A17-A19)			
3	8/86	INCORPORATED IN THIS REVISION: Hole (E15, E16, E17, E18, E19)			
2	5/86	INCORPORATED IN THIS REVISION: (G-8, J-11, E-17) FCR-P-3894 (G-14) FCR-P-3092 23 E15-E17 FCR-M-1544 (C-8 & 9 / H8/5) FCR-SP 11/87 (F-14) ADDED VLVS 101 (F-13) REVISED DWG ZONES (J7/L-485)			
1	1/86	INCORP'D IN THIS REV.: FCR-SM-119 (NC); 78 (NC); G1 (NC); DCN-FD: 366 (NC); 762 R1 (F-12); 577 (G-12, J-12); 548 (NC); ADDED NOTE (A-18)			

CAROLINA POWER & LIGHT COMPANY
SHEARON HARRIS NUCLEAR POWER PLANT

SIMPLIFIED FLOW DIAGRAM
FUEL POOLS COOLING SYSTEM
UNIT 1

SCALE NONE | APPROVED | DATE 11-8-85
DR. MECH. | DR. CPB | CH. HSB | 11/8/85
CPL-2165
S-0805

D-1B