CPL-2165
S-0561

REPLACES DWG. 3FD-1985-H-061

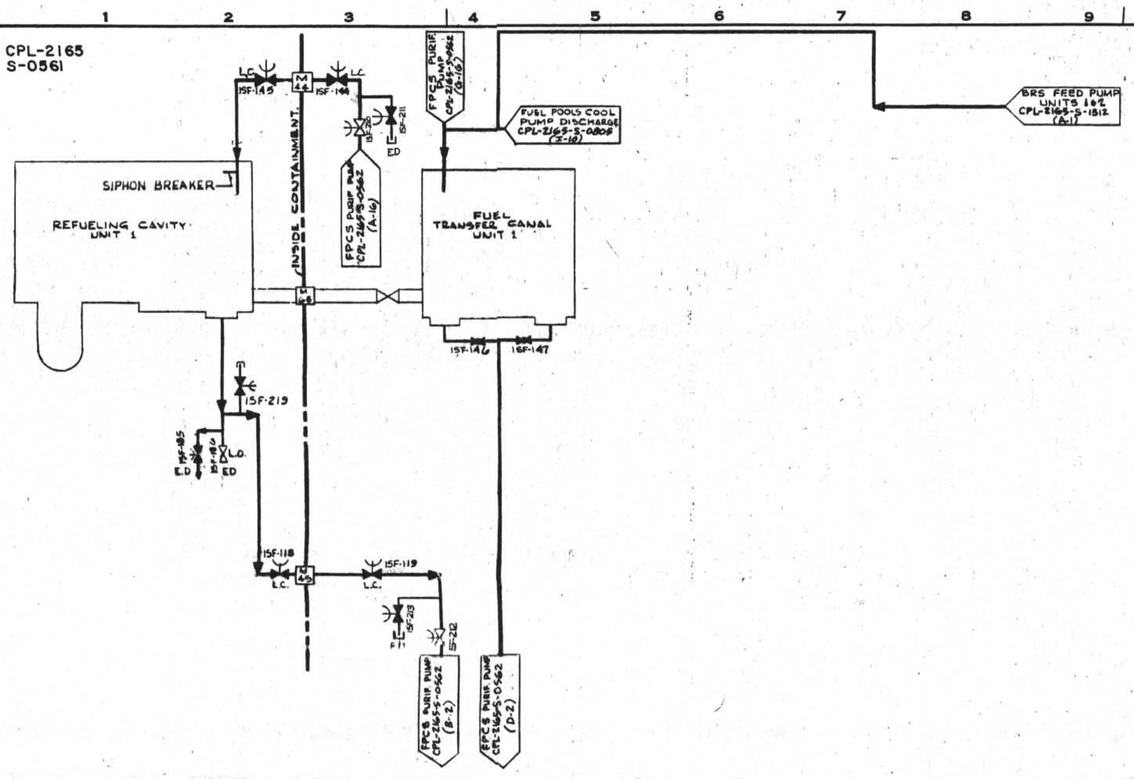

REFUELING CAVITY & TRANSFER CANAL CLEAN-UP
UNIT 1

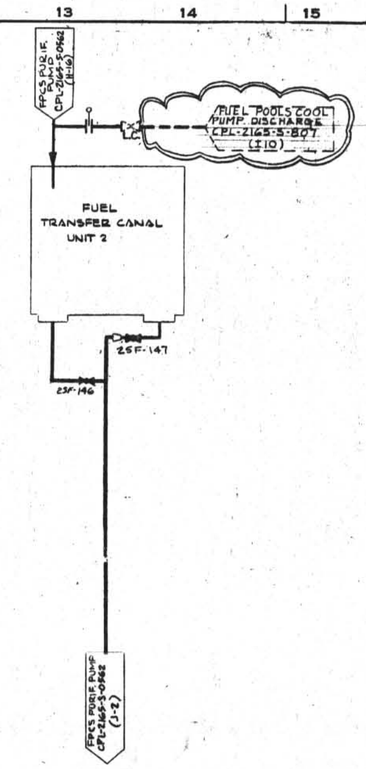

FUEL TRANSFER CANAL CLEAN-UP
UNIT 2

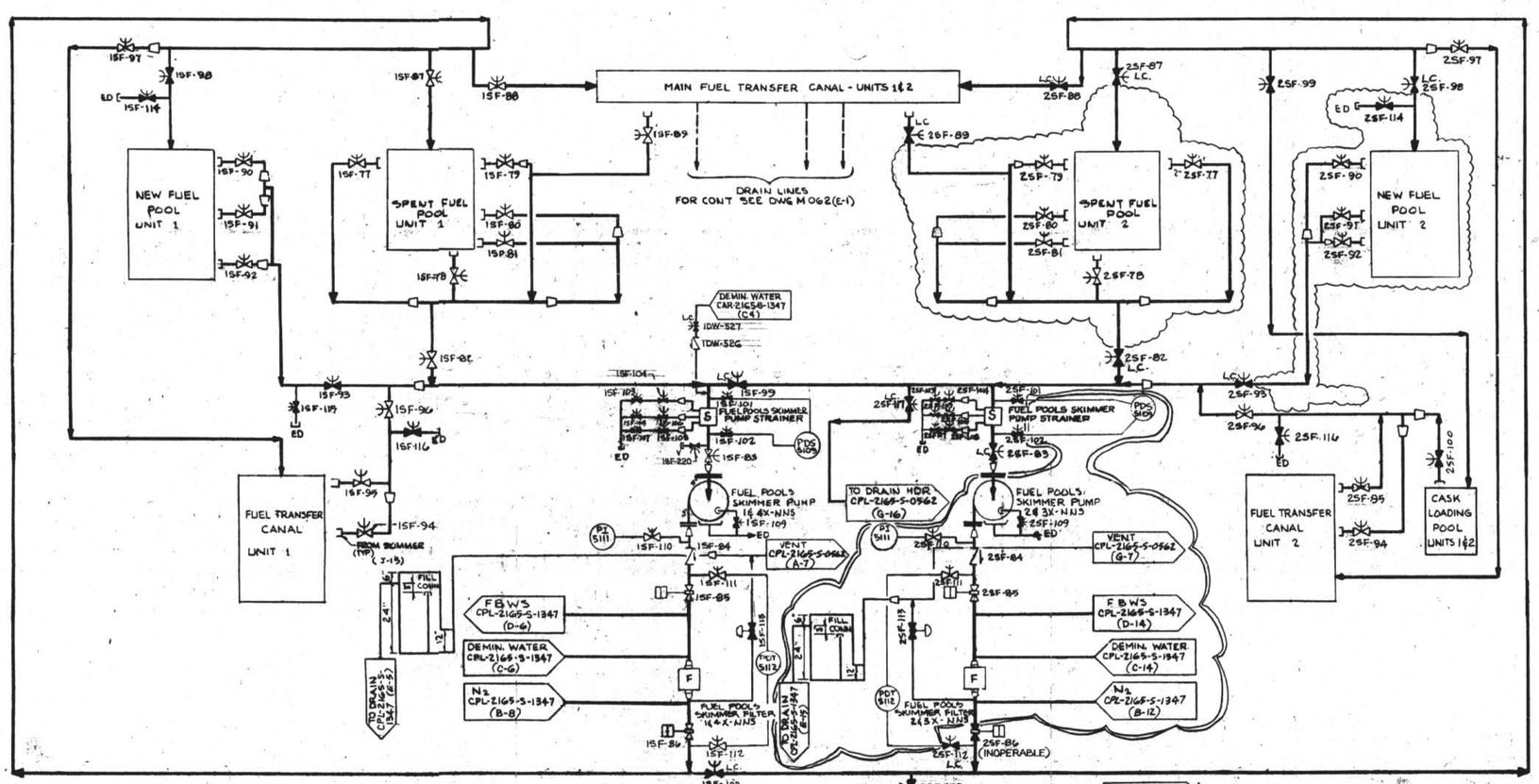

SKIMMER SYSTEM
UNITS 1&2

CONSTRUCTION HOLD
INSTALLATION OF EQUIPMENT IN THESE AREAS SHOULD NOT BE CONSIDERED COMPLETE

REV	DATE	REVISION	BY	CH.	APP
8	7/26/94	INCORPORATED: ECR 3-92015 (H10, H11, H12, L8-L18, J8-J18, K11, K12)			
7	[illegible]	INCORPORATED IN THIS REV.: PCR-4105 (A13)			
6	[illegible]	INCORPORATED IN THIS REV.: PCR-3331 (C14-I16, N9)			
5	[illegible]	INCORPORATED IN THIS REVISION: PCR-164 (J1, K1)			
4	[illegible]	INCORPORATED: DCA-M-3395 (H10, J11, C2, D2); ECR-M-1248 (H10, H11, C2, D2, F3, K7, B12); DELETED: NOTE (A8, A9)			
3	[illegible]	PLACED CONSTRUCTION OF PIPING AND EQUIPMENT ON THIS DRAWING ON HOLD UNTIL ADDITIONAL FUEL STORAGE CAPACITY IS REQUIRED. INCORPORATED: DCA-M-2485 (A14, H10, H13, J10, J11, K9, N9); ECR-P-4445 (C2, E3)			
2	7/3/85	INCORPORATED IN THIS REVISION: DCA-M-2485 (A4, A5, B-H, C3-C8, C9-C14, D12, D13, F3, H9, H10, K7, K8, K11, N8, N11); ECR-P-3052 R3 (A11, A12, A14 THRU A18, C12, D12, B13, F13, H9, H10, K7, K8, K11, N8, N11); REVISED (A3, A6, F4, G4, G14, I2, I3, I9, I10, I13, K7, K10, K12, L3, L7, L10, L12, M9, M10, N7, N9, A6 THRU F6, A10 THRU F10)			
1	11/5/84	INCORP. GENERAL DES.-2165-G-061 (B-4, B-6, B-14, E-5 T-5-6-10-17, L-8-10, J-2, K-P-2628T (VALVE CROSS REF.) PCR-3M-127 (A-3) 129 (E-8)			

CAROLINA POWER & LIGHT COMPANY
SHEARON HARRIS NUCLEAR POWER PLANT

SIMPLIFIED FLOW DIAGRAM
FUEL POOLS CLEAN-UP SYSTEMS
SHEET-1
UNIT 1

DATE 11-21-83

CPL-2165
S-0561

D-1