STOP, THINK, ACT AND REVIEW

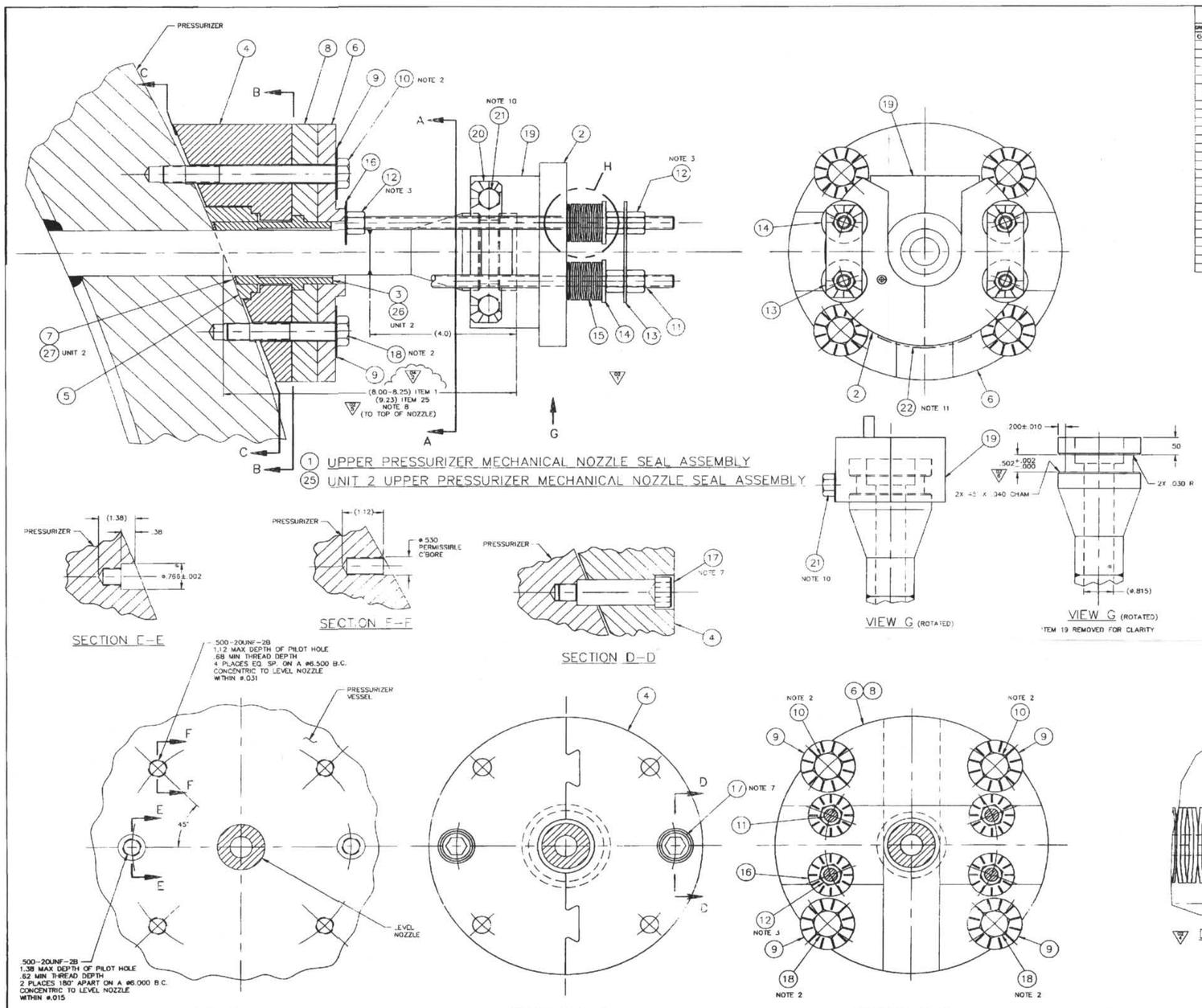

BILL OF MATERIALS
QUANTITIES ARE FOR ONE ASSEMBLIES

GROUP NO. & QUANTITY 6	5	4	3	2	1	ITEM NO.	NAME	PIECE NO.	MATERIAL	REMARKS
					X	1	UPPER PRESSURIZER MNSA	E-MNSABGE-228-005-01		
				1		2	TOP PLATE	E-MNSA-228-020-07	NOTE 5	
					1	3	COMPRESSION COLLAR	E-MNSA-228-020-29	NOTE 5	
			1			4	LOWER FLANGE	E-MNSA-228-020-30	NOTE 5	
			1		1	5	SEAL RETAINER	E-MNSA-228-020-31	NOTE 5	
			1			6	UPPER FLANGE (OUTBOARD)	E-MNSA-228-020-12	NOTE 5	
					1	7	UPPER PRESS. MNSA GRAFOIL SEAL	E-MNSA-228-020-48	NOTES 4 & 5	
			1		1	8	UPPER FLANGE (INBOARD)	E-MNSA-228-020-14	NOTE 5	
			4		4	9	RETAINER WASHER (1/2)	E-MNSA-228-020-1	NOTES 4 & 5	
			4		2	10	HEX HEAD BOLT	E-MNSA-228-020-32	NOTE 5	
			4		4	11	TIE ROD	E-MNSA-228-020-40	NOTE 5	
			12		12	12	HEX NUT	E-MNSA-228-004-27	NOTE 5	
			2		2	13	TIE ROD RETAINER PLATE	E-MNSA-228-020-4	NOTES 4 & 5	
			4		4	14	UPPER TOP HAT WASHER	E-MNSA-228-020-41	NOTES 4 & 5	
			48		48	15	BELLEVILLE WASHER	E-MNSA-228-020-6	NOTES 4 & 5	
			4		4	16	RETAINER WASHER (3/8)	E-MNSA-228-020-2	NOTES 4 & 5	
			2		2	17	SOCKET HEAD SHOULDER SCREW	E-MNSA-228-020-36	NOTE 5	
			2		2	18	HEX HEAD BOLT	E-MNSA-228-020-33	NOTE 5	
			1		1	19	CLAMP ASSY	E-MNSA-228-020-16	NOTE 5	
			1		1	20	CLAMP RETAINER PLATE	E-MNSA-228-020-20	NOTES 4 & 5	
			2		2	21	HEX HEAD BOLT	E-MNSA-228-020-21	NOTE 5	
				1	X	22	NAMEPLATE	E-MNSABGE-228-004-05	NOTES 5 & 11	
				3		23	RIVET	E-MNSABGE-228-004-06	18-8 SST	McMASTER-CARR P/N/99654A077
			8		8	24	SOFT BELLEVILLE WASHER	E-MNSA-228-020-37	NOTES 4 & 5	
			X			25	UNIT 2 UPPER PRESSURIZER MNSA	E-MNSABGE-228-005-25		
			1			26	COMPRESSION COLLAR	E-MNSA-228-020-38	NOTE 5	
			1			27	UPPER PRESS. MNSA GRAFOIL SEAL (UNIT 2)	E-MNSA-228-020-39	NOTES 4 & 5	

11. ITEM 22 (NAMEPLATE) AND ITEM 23 (RIVET) ARE NON-SAFETY RELATED ITEMS. ITEM 22 TO BE ATTACHED TO ITEM 2, USING ITEM 23. SEE DWG No. E-MNSABGE-228-004 FOR INSTALLATION DETAILS.

10. TIGHTEN ITEM 21 TO 10 +0/-2 FT-LBS.

9. THE WEIGHT OF ONE ASSEMBLY IS APPROX 49 LBS.

8. DIMENSIONS OF NOZZLE COMPONENTS ARE SITE SPECIFIC. THESE DIMENSIONS SHALL BE VERIFIED BY MEASUREMENT OF "AS BUILT" DIMENSIONS PRIOR TO INSTALLATION OF ITEMS.

7. TIGHTEN ITEM 17 TO 20.0±2.0 FT-LBS.

6. ITEMS 2-6, 8, 10-12, 17-19, 21 & 26 ARE PRESSURE RETAINING ITEMS. AND SHALL BE MANUFACTURED AS SECTION III SUBSECTION NB CLASS 1 ITEM PER THE ASME BOILER AND PRESSURE VESSEL CODE, 1989 EDITION, NO ADDENDA. DESIGN PRESSURE IS 2,500 PSIA @ MAX OPERATING PRESSURE IS 2,250 PSIA @ 653°F. IN ADDITION, FOR ITEMS 2-6, 8, 19 & 26 EACH MATERIAL HEAT SHALL BE TESTED PER ASTM A262, PRACTICE A OR E.

5. MATERIAL:
   ITEMS 9, 13, 14, 16, 20 & 22: 300 SERIES SS
   ITEMS 2-6, 8, 19 & 26: SA-479, TYPE 304
   ITEM 7, 27: GRAFOIL, GRADE GTJ NUCLEAR GRADE A (99.5% GRAPHITE), SHALL HAVE FINAL DENSITY OF 90 LB/FT³ AND LEACHABLE CHLORIDE CONTENT LESS THAN 50 PPM
   ITEMS 10-12, 17, 18 & 21: SA 453, GRADE 660
   ITEM 15: 17/7 STAINLESS STEEL
   ITEM 24: 300 SERIES STAINLESS STEEL.

4. ITEMS 7, 9, 13-16, 20, 24 & 27 ARE CONSIDERED SAFETY RELATED NON-ASME CODE ITEMS.

3. TIGHTEN ITEM 12 TO 75±5 IN-LBS.

2. TIGHTEN ITEMS 10 & 18 TO 30.0±2.0 FT-LBS.

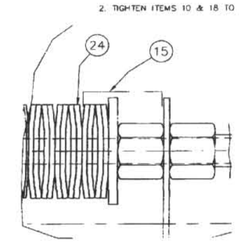

REV.	DESCRIPTION	BY & DATE	CHK'D & DATE	APP'D & DATE	CUST APP'L & DATE
03	1-NOTE 5 ITEM 24 WAS 301 STAINLESS STEEL 2-IN B.M. ITEM 14 PIECE NO. WAS E-MNSABGE-228-020-05. 3- UPDATED COMPANY LOGO PER REV REQ NO. 00-036.	DRL/ZOLOVSKI 2-28-00	J.LANGLAIS 2-28-00	A.Z.SZABO 2-28-00	
02	1-B/M: ITEM 7 PIECE NO. WAS E-MNSA-228-020-08 [2-ZONE F6: DIM WAS (8.59) PER REV REQ 00-084				

REV.	DESCRIPTION	BY & DATE	CHK'D & DATE	APP'D & DATE	CUST APP'L & DATE
01	1-INITIALLY RELEASED AS "CERT. FOR CONSTRUCTION" & ADDED VERIFICATION STATUS: COMPLETE LABEL-PER REV REQ 99-216	M.SWARD 9-23-99	J.LANGLAIS 9-23-99	A.Z.SZABO 9-23-99	J.M.BURGER 9-23-99
00	1. ZONE F5: DELETED NOTE 1 2. B/M: ADDED ITEMS 23 - 27 3. REVISED NOTES 4,5,6,8,9 & 11 4. ZONE B3: ADDED DETAIL H 5. ZONE F6: ADDED ITEM 25 6. ZONE E3: DIM WAS .500 +.003 -.000 PER REV REQ 99-269	R.RAYNO 12-6-99	J.LANGLAIS 12-6-99	A.Z.SZABO 12-6-99	J.M.BURGER 12-6-99 J.T.McGARRY 12-6-99

UNLESS OTHERWISE SPECIFIED
DIMENSIONING & TOLERANCING PER ANSI Y14.5M-1982
DIMENSIONS APPLY AT 68°F(20°C)
ALL DIMENSIONS ARE IN INCHES
TOLERANCES:
ONE PLACE DECIMAL ± .1
TWO PLACE DECIMAL ± .02
THREE PLACE DECIMAL ± .005
BREAK CORNERS .015 APPROX. IN OR CHAM - FILLETS .015 TO .030 R
MACHINED FINISH AA125 MICRO IN.
ANGLES ± 0° 30' CHAM ± 5°
DO NOT SCALE DRAWING

ABB
ABB C-E NUCLEAR POWER, INC.

CUSTOMER: BALTIMORE GAS & ELECTRIC CALVERT CLIFFS 1 & 2
NEXT ASSY
SUPERSEDES
PROJECT NO. 2003295
TASK NO. DFT
SCALE 1/1

VERIFICATION STATUS: COMPLETE
THE DESIGN INFORMATION CONTAINED IN THIS DOCUMENT HAS BEEN VERIFIED TO BE CORRECT BY MEANS OF DESIGN REVIEW.
DESIGN VERIFICATION METHOD: DESIGN REVIEW

		DATE
DRAWN BY	M.SWARD	9-23-99
CHECKED BY	J.LANGLAIS	9-23-99
APPROVALS	A.Z.SZABO	9-23-99
	J.M.BURGER	9-23-99
	J.T.McGARRY	9-23-99

TITLE: UPPER PRESSURIZER MECHANICAL NOZZLE SEAL ASSEMBLY
DWG. NO. E-MNSABGE-228-005
SHEET OF REV

D-7

REV	DATE	DESCRIPTION	DWN	DSGN	DE	IR	APPROVED
OC	31 MAR 00	REVISED FOR CONSTRUCTION ES199800338-000					

DRAWN JCH
DESIGNED
CIVIL ENGR.
ELECT. ENGR.
I & C ENGR.
MECH. ENGR.
I.R.
APPROVED
DATE

UPPER PRESSURIZER MECHANICAL NOZZLE SEAL ASSEMBLY

BALTIMORE GAS AND ELECTRIC COMPANY
NUCLEAR ENGINEERING DEPARTMENT
CALVERT CLIFFS UNIT 1&2 ELECTRIC PRODUCTION PLANT
SIZE E CAT. 3
SCALE NONE
SYMBOOK DWG. NO. E-MNSABGE-228-005 REV. OC
INTER NO. 66348.DGN
DWG. NO. 12019-0078

LAST USER: JCH