UNITED STATES NUCLEAR REGULATORY COMMISSION
BOILING WATER REACTOR GENERIC FUNDAMENTALS EXAMINATION
OCTOBER 2000--FORM B

Please Print

Name: _____

Facility: _____

Docket No.: _____

Start Time: _____ Stop Time: _____

INSTRUCTIONS TO APPLICANT

Answer all the test items using the answer sheet provided. Each item has equal point value. A score of at least 80% is required to pass this portion of the written licensing examination. All examination papers will be collected 3.0 hours after the examination starts. This examination applies to a typical boiling water reactor (BWR) power plant.

SECTION	QUESTIONS	% OF TOTAL	SCORE
THERMODYNAMICS	1 - 28		
COMPONENTS	29 - 72		
REACTOR THEORY	73 - 100		
TOTALS	100		

All work done on this examination is my own. I have neither given nor received aid.

))))))))))))))))))))))))))))))))))))))
Applicant's Signature

RULES AND GUIDELINES FOR THE
GENERIC FUNDAMENTALS EXAMINATION

During the administration of this examination the following rules apply:

NOTE: The generic term "control rod" refers to the length of neutron absorber material that can be positioned by the operator to change core reactivity.

1. Print your name in the blank provided on the cover sheet of the examination.

2. Fill in the name of your facility.

3. Fill in your individual docket number.

4. Fill in your start and stop times at the appropriate time.

5. Two aids are provided for your use during the examination:

   (1) An equations and conversions sheet contained within the examination copy, and

   (2) Steam tables provided by your proctor.

6. Place your answers on the answer sheet provided. Credit will only be given for answers properly marked on this sheet. Follow the instructions for filling out the answer sheet.

7. Scrap paper will be provided for calculations.

8. Cheating on the examination will result in the automatic forfeiture of this examination. Cheating could also result in severe penalties.

9. Restroom trips are limited. Only **ONE** examinee may leave the room at a time. In order to avoid the appearance or possibility of cheating, avoid all contact with anyone outside of the examination room.

10. After you have completed the examination, sign the statement on the cover sheet indicating that the work is your own and you have neither given nor received any assistance in completing the examination.

11. Turn in your examination materials, answer sheet on top, followed by the examination booklet, then examination aids - steam table booklets, handouts, and scrap paper used during the examination.

12. After turning in your examination materials, leave the examination area, as defined by the proctor. If after leaving you are found in the examination area while the examination is in progress, your examination may be forfeited.

GENERIC FUNDAMENTALS EXAMINATION
EQUATIONS AND CONVERSIONS HANDOUT SHEET

EQUATIONS

$\dot{Q} = \dot{m}c_p ? T$

$\dot{Q} = \dot{m} ? h$

$\dot{Q} = UA ? T$

$\dot{Q} \propto \dot{m}^3_{Nat\ Circ}$

$? T \propto \dot{m}^2_{Nat\ Circ}$

$K_{eff} = 1/(1 - ?)$

$? = (K_{eff} - 1)/K_{eff}$

$SUR = 26.06/t$

$$t = \frac{\bar{ß} - ?}{?_{eff}\ ?}$$

$$? = \frac{\ell^*}{t} + \frac{\bar{ß}}{1 + ?_{eff} t}$$

$\ell^* = 1 \times 10^{-4}$ seconds

$?_{eff} = 0.1$ seconds^{-1}

$DRW \propto f^2_{tip} / f^2_{avg}$

$P = P_o 10^{SUR(t)}$

$P = P_o e^{(t/t)}$

$A = A_o e^{-?t}$

$CR_{S/D} = S/(1 - K_{eff})$

$CR_1(1 - K_{eff1}) = CR_2(1 - K_{eff2})$

$1/M = CR_1/CR_X$

$A = pr^2$

$F = PA$

$\dot{m} = ? A \vec{v}$

$\dot{W}_{Pump} = \dot{m} ? P ?$

$E = IR$

Eff. = Net Work Out/Energy In

$$?(P_2 - P_1) + \frac{(\vec{v}_2^2 - \vec{v}_1^2)}{2g_c} + \frac{g(z_2 - z_1)}{g_c} = 0$$

$g_c = 32.2$ lbm-ft/lbf-sec^2

CONVERSIONS

---

1 Mw	= 3.41×10^6 Btu/hr	1 Curie	= 3.7×10^{10} dps
1 hp	= 2.54×10^3 Btu/hr	1 kg	= 2.21 lbm
1 Btu	= 778 ft-lbf	1 gal_{water}	= 8.35 lbm
°C	= (5/9)(°F - 32)	1 ft^3_{water}	= 7.48 gal

°F = (9/5)(°C) + 32

QUESTION: 1

An open vessel contains one pound-mass of water at 206°F and atmospheric pressure. Which one of the following will be caused by the addition of 3 Btu to the water?

A. The water temperature will rise by 3°F.

B. 3% of the water mass will vaporize.

C. The water density will decrease by 3%.

D. The water will become superheated by 3°F.

QUESTION: 2

Refer to the drawing of four identical tank differential pressure level detectors (see figure below).

The tanks are identical and are presently at 2 psig overpressure, 60°F, and the same constant water level. They are located within a sealed containment structure that is being maintained at atmospheric pressure. All level detectors have been calibrated and are producing the same level indication. A ventilation malfunction causes the containment structure pressure to decrease to 13 psia.

Which level detectors will produce the highest indication?

A. 1 and 2

B. 3 and 4

C. 1 and 4

D. 2 and 3

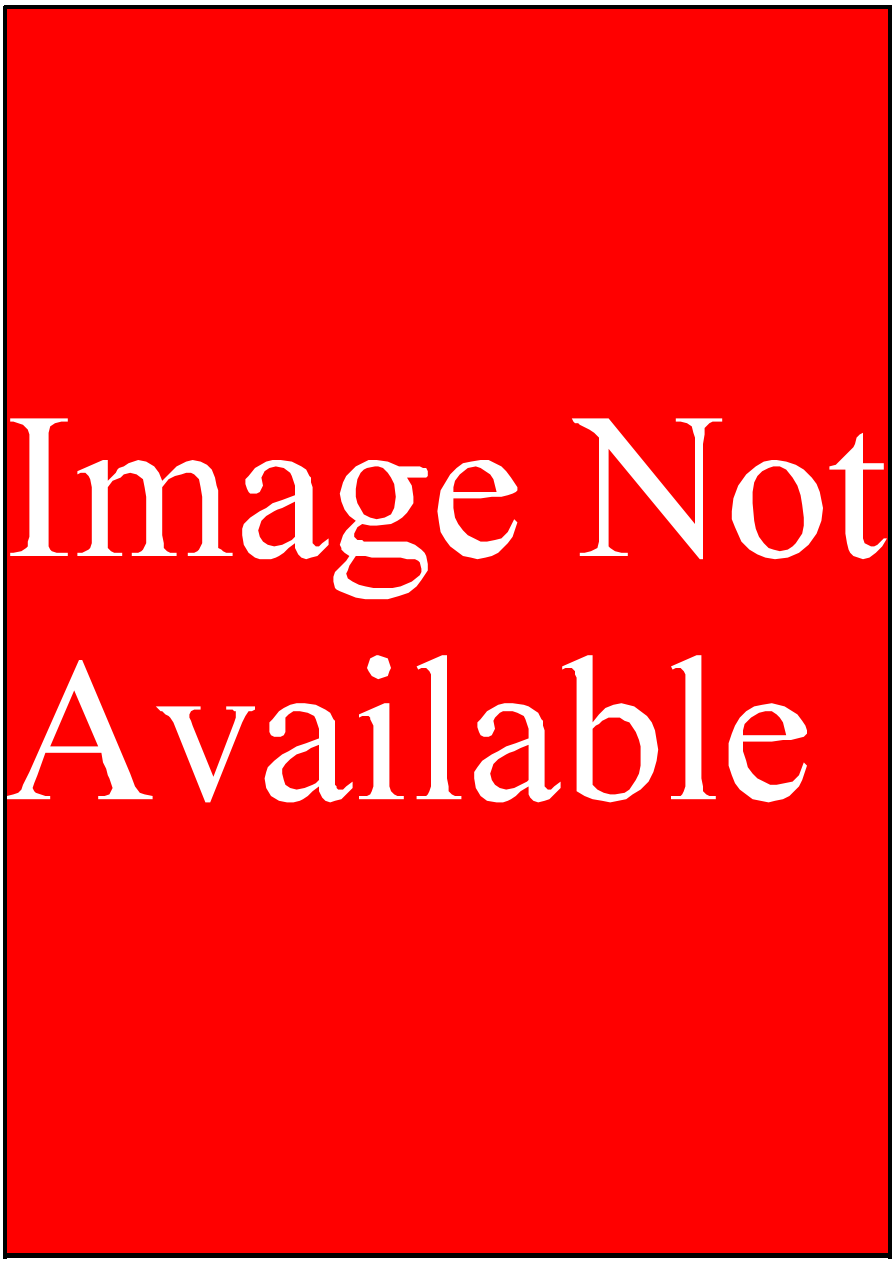

QUESTION: 3

Consider a shutdown reactor vessel containing a saturated water/vapor mixture at 500°F. The mixture is currently stable with no heat gain or loss occurring. Reactor vessel water level is 100 inches above the top of the fuel bundles.

If a leak near the bottom of the vessel results in a loss of 10% of the liquid volume from the vessel, the temperature of the mixture will _____, and the overall quality of the mixture will _____. (Assume the mixture remains saturated.)

A. decrease; increase

B. decrease; decrease

C. remain the same; increase.

D. remain the same; decrease

QUESTION: 4

What is the approximate condensate depression in a condenser operating at 28 inches Hg vacuum with a condensate temperature of 100°F?

A. Less than 2°F

B. 3°F to 5°F

C. 6°F to 8°F

D. 9°F to 11°F

QUESTION: 5

Refer to the drawing of a steam-jet air ejector (see figure below).

In the figure of an operating steam-jet air ejector, steam flowing from 1 to 2 undergoes a pressure _____ and a velocity _____.

A. increase; decrease

B. increase; increase

C. decrease; decrease

D. decrease; increase

Image Not Available

QUESTION: 6

If the moisture content of the steam supplied to a main turbine increases, (assume no change in steam pressure, condenser pressure, or control valve position) turbine work will:

A. decrease because the enthalpy of the steam being supplied to the turbine has decreased.

B. decrease because moist steam results in more windage losses in the turbine.

C. increase because the enthalpy of the steam being supplied to the turbine has increased.

D. increase because moist steam results in less windage losses in the turbine.

QUESTION: 7

Which of the following completes the following statement?

Pump cavitation occurs when vapor bubbles are formed at the eye of a pump impeller...

A. because the localized flow velocity exceeds sonic velocity for the existing fluid temperature.

B. because the localized pressure exceeds the vapor pressure for the existing fluid temperature.

C. and enter a high pressure region of the pump where they collapse causing damaging pressure pulsations.

D. and are discharged from the pump where they expand into larger bubbles causing damaging pressure pulsations.

QUESTION: 8

A centrifugal pump is operating at rated flow and pressure in an open system. A break occurs in the pump discharge piping resulting in a loss of pump back-pressure.

Under these conditions, the pump will be operating at a _____ flow rate and drawing _____ electrical power.

A. lower; less

B. higher; less

C. lower; more

D. higher; more

QUESTION: 9

A 100 gpm leak to atmosphere has developed from a cooling water system that is operating at 60 psig. Which one of the following will be the approximate leak rate when system pressure has decreased to 20 psig?

A. 11 gpm

B. 33 gpm

C. 58 gpm

D. 71 gpm

QUESTION: 10

Which one of the following describes a heat transfer process in which convection is the most significant heat transfer mechanism?

A. From the reactor fuel to the core barrel during core uncovery

B. Through the tube walls in a main condenser during normal operation at 100% power

C. From the reactor fuel to the steam outlet of the reactor vessel during a station blackout

D. From fuel pellet centerline to fuel clad during normal operation at 100% power

QUESTION: 11

The power range nuclear instruments have been adjusted to 100% based on a calculated heat balance. Which one of the following will result in indicated reactor power being <u>lower</u> than actual reactor power?

A. The feedwater temperature used in the heat balance calculation was 20°F higher than actual feedwater temperature.

B. The reactor recirculation pump heat input term was omitted from the heat balance calculation.

C. The steam and feedwater flow rates used in the heat balance calculation were 10% higher than actual flow rates.

D. The steam pressure used in the heat balance calculation was 50 psi lower than actual steam pressure.

QUESTION: 12

A reactor is operating at power. The feedwater flow rate to the reactor vessel is 7.0×10^6 lbm/hr at a temperature of 440°F. The steam exiting the reactor vessel is at 1000 psia with 100% steam quality.

Ignoring all other heat gain and loss mechanisms, what is the core thermal power?

A. 1335 MWt

B. 1359 MWt

C. 1589 MWt

D. 1612 MWt

QUESTION: 13

As heat is transferred to water adjacent to a heating surface, many factors influence steam bubble formation. Select the characteristic below that will enhance steam bubble formation.

A. Chemicals dissolved in the water

B. The absence of ionizing radiation exposure to the water

C. A highly polished heat transfer surface with minimal scratches or cavities

D. The presence of gases dissolved in the water

QUESTION: 14

Subcooled reactor coolant flows into the bottom of a fuel assembly coolant channel and exits the top of the channel as a saturated steam-water mixture with a 98% moisture content. How does the convective heat transfer coefficient in the coolant channel change as the coolant travels upward along the channel?

A. Increases only

B. Increases, then decreases

C. Decreases only

D. Decreases, then increases

QUESTION: 15

If ? T is the temperature difference between the fuel rod clad and the coolant, which one of the following describes the heat transfer from a fuel rod at the departure from nucleate boiling?

A. Steam bubbles begin to form on the fuel rod clad, causing a rapid decrease in the heat flux from the fuel rod for a given ? T.

B. Steam bubbles completely blanket the fuel rod clad, causing a rapid increase in the heat flux from the fuel rod for a given ? T.

C. Steam bubbles begin to blanket the fuel rod clad, causing a rapid increase in the ? T for a given heat flux.

D. Steam bubbles completely blanket the fuel rod clad, causing a rapid decrease in the ? T for a given heat flux.

QUESTION: 16

Refer to the drawing of a pool boiling curve (see figure below).

Which one of the following describes the conditions in a fuel channel that is experiencing region III heat transfer?

A. Saturated nucleate boiling

B. Subcooled nucleate boiling

C. Complete steam blanketing of the fuel rod surface

D. Alternate wetting and drying of the fuel rod surface

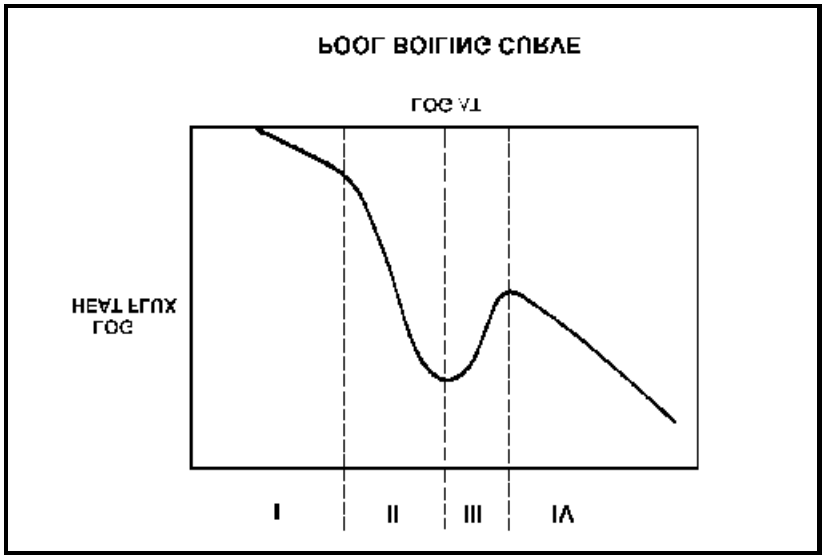

QUESTION: 17

Which one of the following will be the initial cause of fuel damage if a fuel rod exceeds the critical heat flux at 100% power?

A. Excessive fuel clad temperature

B. Excessive fuel pellet temperature

C. Excessive fuel rod internal pressure

D. Excessive fuel rod thermal stress

QUESTION: 18

Given the following conditions:

10 lbm mixture of vapor and liquid
Steam quality = 40%
Pressure = 1,000 psia

Which one of the following approximates the void fraction?

A. 93.2%

B. 89.9%

C. 10.1%

D. 6.8%

QUESTION: 19

Which one of the following is the approximate percentage of total core flow that bypasses the fuel coolant channels in a reactor operating at 100% power with 100% recirculation flow?

A. 0.01%

B. 0.1%

C. 1 %

D. 10 %

QUESTION: 20

A reactor is operating at 40% of rated thermal power with power distribution peaked both radially and axially in the center of the core. Reactor power is then increased to 70% over the next two hours using only reactor recirculation flow rate adjustments for reactivity control.

Neglecting any effect from reactor poisons, when power is stabilized at 70%, the location of the maximum core radial peaking factor will _____ of the core and the location of the maximum core axial peaking factor will _____ of the core.

A. move toward the periphery; move toward the bottom

B. move toward the periphery; move toward the top

C. remain near the center; move toward the bottom

D. remain near the center; move toward the top

QUESTION: 21

Which one of the following limits takes into consideration fuel-pellet swell effects?

A. Average gain adjustment factor

B. Maximum linear heat generation rate

C. Rated thermal power

D. Minimum critical power ratio

QUESTION: 22

Maintaining the linear heat generation rate below the thermal limit ensures that:

A. peak cladding temperature after the design basis loss of coolant accident will not exceed 2200°F.

B. during transients, more than 99.97% of the fuel rods will avoid transition boiling.

C. plastic strain (deformation) of the cladding will not exceed 1%.

D. peaking factors will not exceed those assumed in the safety analysis.

QUESTION: 23

The 2200°F maximum peak fuel cladding temperature limit is imposed because:

A. the thermal conductivity of zircaloy decreases rapidly at temperatures above 2200°F causing an unacceptably sharp rise in the fuel centerline temperature.

B. any cladding temperature higher than this correlates to a fuel centerline temperature above the fuel melting point.

C. the rate of the zircaloy-steam reaction increases significantly at temperatures above 2200°F.

D. 2200°F is approximately 500°F below the fuel cladding melting temperature.

QUESTION: 24

A step increase in reactor power results in a fuel rod surface temperature increase from 555°F to 585°F at steady state conditions. The fuel thermal time constant is 6 seconds.

Which one of the following is the approximate fuel rod surface temperature 6 seconds after the power change?

A. 574°F

B. 570°F

C. 567°F

D. 563°F

QUESTION: 25

Select the cause for the reduction in the size of the gap between the fuel pellet and the clad over core life.

A. Contraction of the clad due to zirconium hydriding

B. Expansion of the fuel pellets due to fission product buildup

C. Contraction of the clad due to fuel rod internal vacuum

D. Expansion of the fuel pellets due to densification

QUESTION: 26

A plant is operating at 90% power at the end of core life when a signal error causes the turbine control system to throttle the turbine control valves 5 percent in the closed direction. Assuming the turbine control valves stabilize in their new position and the reactor does not scram, the critical power ratio will initially:

A. increase because reactor power initially increases.

B. decrease because reactor power initially decreases.

C. increase because the reactor coolant latent heat of vaporization initially increases.

D. decrease because the reactor coolant latent heat of vaporization initially decreases.

QUESTION: 27

Which one of the following operating limitations is designed to prevent brittle fracture of the reactor vessel?

A. Maximum setpoint for main steam safety valves

B. Maximum chloride concentration in the reactor coolant

C. Maximum reactor pressure versus vessel temperature during heatup

D. Maximum differential temperature between the vessel steam dome and the bottom head

QUESTION: 28

Two identical reactors are currently shut down for refueling. Reactor A has achieved an average lifetime power capacity of 60% while operating for 15 years. Reactor B has achieved an average lifetime power capacity of 60% while operating for 12 years.

Which reactor, if any, will have the lowest reactor vessel nil ductility transition temperature?

A. Reactor A because it has produced the greater number of fissions.

B. Reactor B because it has produced the fewer number of fissions.

C. Both reactors will have approximately the same nil ductility transition temperature because they have equal average lifetime power capacities.

D. Both reactors will have approximately the same nil ductility transition temperature because the fission rate in a shut down core is not significant.

QUESTION: 29

Water storage tanks A and B are identical except that tank A receives overpressure protection from an installed relief valve. Tank B has an installed safety valve. The relief valve and safety valve have the same pressure set point and design flow rate.

Water is continuously added to each tank at the same rate (50% of the design flow rate of the relief/safety valve). After tank pressure reaches the set point for each valve, tank A pressure will _____ and tank B pressure will _____.

A. stabilize slightly above the pressure setpoint; stabilize slightly above the pressure setpoint

B. stabilize slightly above the pressure setpoint; fluctuate within a few percent of the pressure setpoint

C. fluctuate within a few percent of the pressure setpoint; stabilize slightly above the pressure setpoint

D. fluctuate within a few percent of the pressure setpoint; fluctuate within a few percent of the pressure setpoint

QUESTION 30

A typical Limitorque® motor-operated valve is installed in an emergency core cooling system (ECCS) application. The ECCS actuation signal is designed to energize the valve motor and open the valve. The valve is currently open, but being manually/locally closed by a technician as required by a surveillance test procedure. The declutch lever has been operated and released, and the valve is being closed by operation of the valve handwheel.

If an ECCS actuation signal is received, how will the valve be affected?

A. The handwheel will disengage and the valve will automatically open.

B. The handwheel will disengage and the valve will remain in the current position.

C. The handwheel will remain engaged and the valve will automatically open.

D. The handwheel will remain engaged and the technician can continue to close the valve.

QUESTION: 31

A typical check valve is designed to:

A. permit flow in only one direction.

B. prevent system overpressure.

C. isolate system components.

D. perform automatic pump venting.

QUESTION: 32

In a comparison between ball valves and butterfly valves in the same liquid process system application, the valves that would typically allow more leakage under high pressure are _____ valves, and the valves that would cause a higher system pressure drop when fully open are _____ valves.

A. ball; butterfly

B. ball; ball

C. butterfly; butterfly

D. butterfly; ball

QUESTION: 33

Which one of the following describes the function and use of the backseat on a manual valve?

A. Removes pressure from the packing/stuffing box and is the normal method used to isolate the stuffing box for valve repacking.

B. Removes pressure from the packing/stuffing box and is normally only used when needed to prevent packing leakage.

C. Acts as a backup in case the primary seat leaks and is normally used during system isolation for personnel protection.

D. Acts as a backup in case the primary seat leaks and is only used when needed to prevent the primary seat from leaking excessively.

QUESTION: 34

If the steam pressure input to a density-compensated steam flow instrument fails high, the <u>indicated</u> flow rate will:

A. decrease, because the density input has decreased.

B. increase, because the density input has decreased.

C. decrease, because the density input has increased.

D. increase, because the density input has increased.

QUESTION: 35

Refer to the drawing of two tank differential pressure (D/P) level indicators (see figure below).

Two D/P level indicators are installed on a large water storage tank. Indicator No. 1 was calibrated at 200°F water temperature and indicator No. 2 was calibrated at 100°F water temperature.

Assuming both indicators are on scale, which indicator will indicate the lower level?

A. Indicator 1 at all water temperatures

B. Indicator 2 at all water temperatures

C. Indicator 1 below 150°F, indicator 2 above 150°F

D. Indicator 2 below 150°F, indicator 1 above 150°F

QUESTION: 36

Refer to the drawing of a tank differential pressure (D/P) level detector (see figure below).

Tank water level indication will be lower than actual level when reference leg temperature is _____ than calibration conditions or when there is a break in the _____ leg of the D/P detector.

A. less; reference

B. less; variable

C. greater; reference

D. greater; variable

QUESTION: 37

A differential pressure (D/P) cell is being used to measure flow rate in a cooling water system. Flow rate is indicating 75% of scale. If the D/P cell diaphragm ruptures, indicated flow rate will go to:

A. 0% because low D/P is sensed.

B. 0% because high D/P is sensed.

C. 100% (full-scale) because low D/P is sensed.

D. 100% (full-scale) because high D/P is sensed.

QUESTION: 38

A properly calibrated 0 to 100 psia diaphragm pressure detector is connected to a pressurized system; the low pressure side of the detector is vented to the atmosphere. The detector is currently producing a system pressure indication of 75 psia.

If the detector diaphragm ruptures, indicated pressure will be approximately:

A. 0 psia.

B. 15 psia.

C. 60 psia.

D. 90 psia.

QUESTION: 39

Refer to the drawing of a simple thermocouple circuit (see figure below).

Thermocouple temperature indication is currently 390°F. If a small steam leak occurs that raises reference (cold) junction temperature by 20°F, the new temperature indication will be: (Assume measuring junction temperature remains constant.)

A. 370°F.

B. 390°F.

C. 400°F.

D. 410°F.

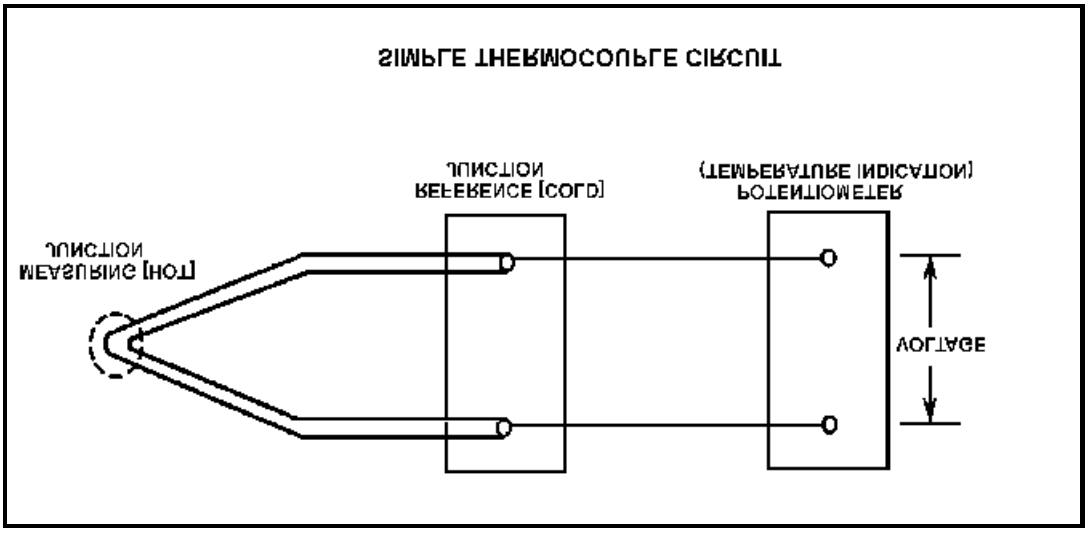

QUESTION: 40

The water pressure within a containment cooling water system is 100 psig, as indicated by a bourdon tube pressure detector located within the containment. The pressure detector case is vented to the containment, which is currently at atmospheric pressure.

If a steam line rupture raises containment pressure by 20 psig, the water system pressure indication will do which of the following? (Disregard any temperature effect on the detector.)

A. Decrease to 80 psig

B. Decrease by a small, but indeterminate amount

C. Increase by a small, but indeterminate amount

D. Increase to 120 psig

QUESTION: 41

Gamma radiation contributes to the output of a fission chamber by reacting with the:

A. detector gas.

B. detector leads.

C. center electrode.

D. U-235 coating on the detector walls.

QUESTION: 42

Three identically-sized, gas-filled radiation detectors are being used to detect alpha, beta, and neutron radiation. The neutron detector is a fission chamber. All three detectors are operating in the ionization region, and each detector is in a separate radiation field consisting of only alpha, beta, or neutron radiation. The radiation fields have equivalent energy and produce equal reaction rates with the associated detectors.

Which one of the following lists the detectors in order from highest to lowest output based on the number of ion pairs collected per unit time on the electrodes?

A. Alpha, Beta, Neutron

B. Alpha, Neutron, Beta

C. Neutron, Alpha, Beta

D. Neutron, Beta, Alpha

QUESTION: 43

An air-operated isolation valve requires 2,400 lbf applied to the top of the actuator diaphragm to open against spring pressure. The actuator diaphragm has a diameter of 12 inches.

If control air pressure to the valve actuator begins to decrease from 100 psig, which one of the following is the approximate air pressure at which the valve will begin to close?

A. 5.3 psig

B. 16.7 psig

C. 21.2 psig

D. 66.7 psig

QUESTION: 44

Refer to the drawing of a flyball-weight mechanical speed governor (see figure below).

In a flyball-weight mechanical speed governor, the purpose of the spring on the flyball mechanism is to _____ centrifugal force by driving the flyballs _____.

A. counteract; outward

B. aid; inward

C. counteract; inward

D. aid; outward

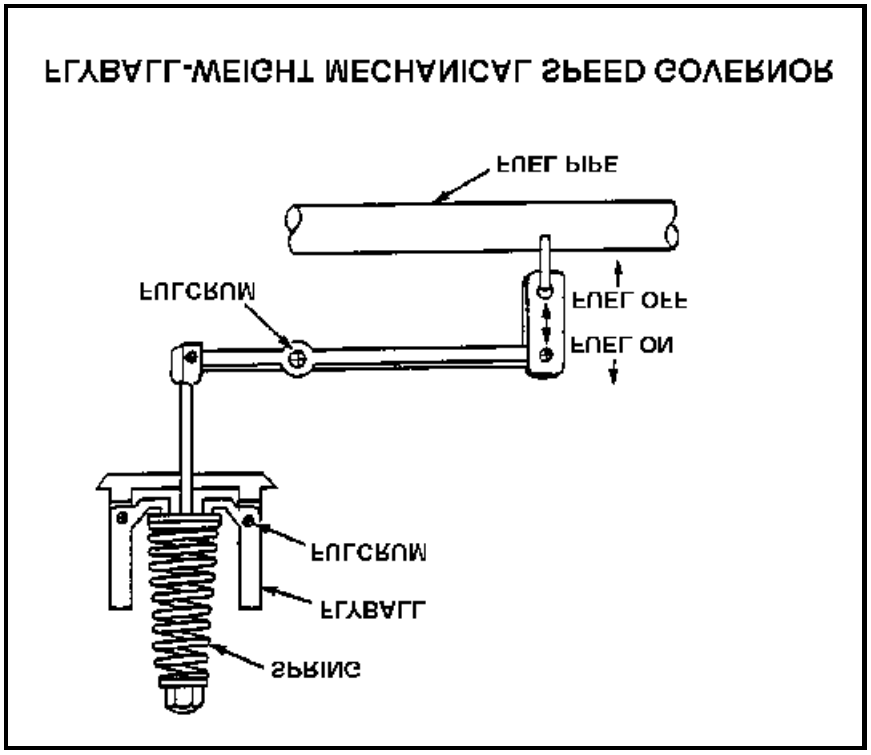

QUESTION: 45

Which one of the following describes the operation of a typical pneumatic valve positioner?

A. Compares the valve controller demand signal with actual valve position and sends an error signal to the valve controller for adjustment of the demand signal.

B. Compares the valve controller automatic and manual set points, and sends an error signal to the valve controller to ensure the manual demand signal is tracking the automatic demand signal.

C. Receives a valve position error signal from the valve controller and positions the valve as necessary to null the valve position error signal.

D. Receives a demand signal from the valve controller and supplies the appropriate air pressure to the valve actuator to move the valve to the demanded position.

QUESTION: 46

Which one of the following changes in pump operating parameters will directly lead to pump cavitation in a centrifugal pump that is operating in an open system?

A. Steadily decreasing pump speed

B. Steadily increasing pump suction pressure

C. Steadily increasing pump discharge pressure

D. Steadily increasing pump inlet temperature

QUESTION: 47

Refer to the drawing of a pump with a recirculation line (see figure below).

Valve "A" will open when pump:

A. discharge pressure reaches a high set point.

B. discharge pressure reaches a low set point.

C. flow rate reaches a high set point.

D. flow rate reaches a low set point.

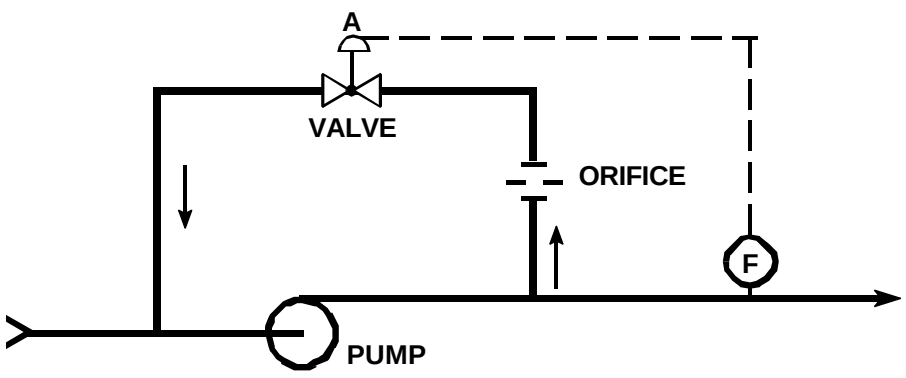

PUMP WITH RECIRCULATION LINE

QUESTION: 48

Refer to the drawing of an operating cooling water system (see figure below).

Which one of the following will increase the available net positive suction head for the centrifugal pump?

A. Draining the surge tank to decrease level by 10%

B. Positioning the service water valve B more closed

C. Positioning the pump discharge valve C more open

D. Reducing the heat loads on the cooling water system

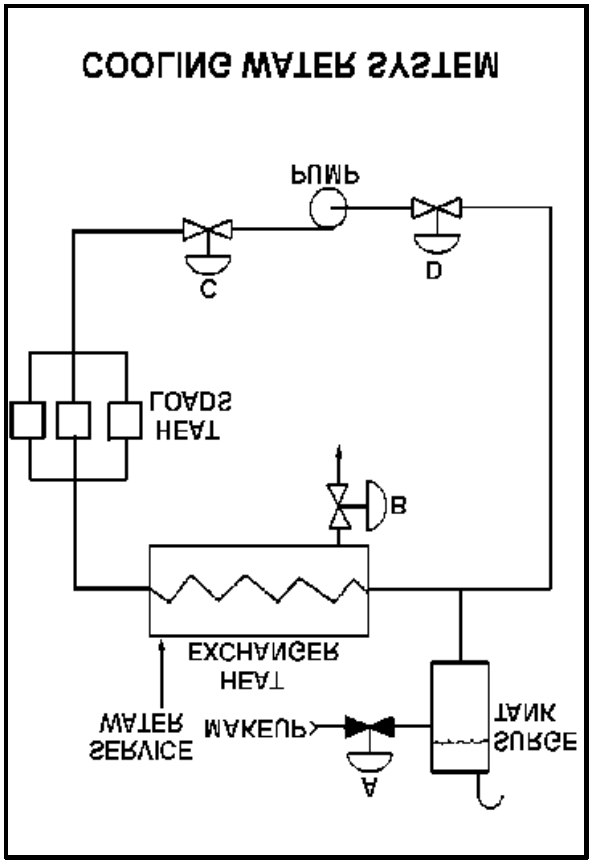

QUESTION: 49

A centrifugal pump is circulating water at 180°F with a motor current of 200 amps. After several hours, system temperature has changed such that the water density has increased by 6%.

Assuming pump head and volumetric flow rate do not change, which one of the following is the new pump motor current?

A. 203 amps

B. 206 amps

C. 212 amps

D. 224 amps

QUESTION: 50

Which one of the following contains two reasons for starting a centrifugal pump with the discharge piping filled and the discharge valve shut?

A. Prevent pump runout and prevent motor overspeed

B. Prevent pump runout and ensure lubrication of pump seals

C. Prevent water hammer and ensure adequate pump recirculation flow

D. Prevent water hammer and prevent excessive starting current

QUESTION: 51

Refer to the drawing of a lube oil temperature control system and the associated centrifugal pump/system operating curves (see figure below) with the temperature control valve at mid-position.

If the temperature control valve modulates farther closed, the centrifugal pump operating point will move along curve _____, and become closer to point _____. (Assume that no other system component changes occur.)

A. 1; D

B. 2; A

C. 1; E

D. 2; C

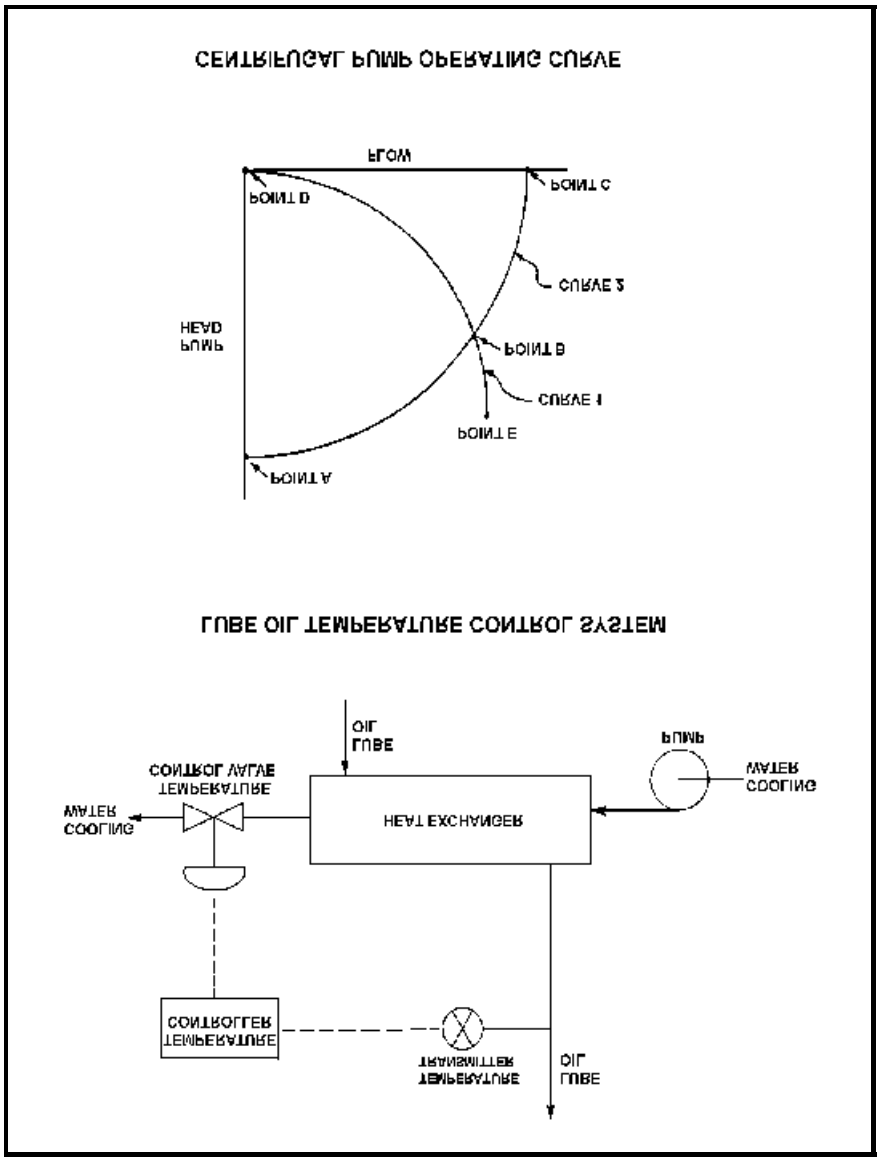

QUESTION: 52

Refer to the drawing of a centrifugal pump operating curve (see figure below).

A centrifugal pump operating in a cooling water system exhibits the operating curve shown below. Which one of the following points on the curve will be closest to the pump operating conditions after the pump suction valve is inadvertently closed?

A. Point A

B. Point B

C. Point C

D. Point D

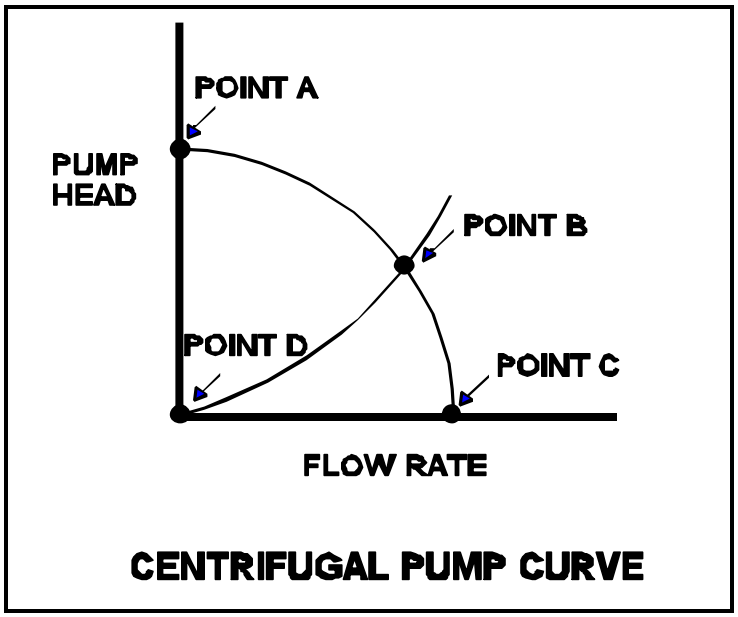

QUESTION: 53

An ideal (no slip) reciprocating positive displacement pump is operating in an open system to provide makeup water to a coolant system that is being maintained at 800 psig. The discharge valve of the pump is full open.

If the pump discharge valve is subsequently throttled to 80% open, pump flow rate will _____ and pump head will _____.

A. decrease; increase

B. decrease; remain constant

C. remain constant; increase

D. remain constant; remain constant

QUESTION: 54

A motor-driven centrifugal pump exhibited indications of pump failure while being started. Which one of the following pairs of indications will occur if the pump failure is a sheared impeller shaft?

A. Excessive duration of high starting current and motor breaker trips

B. Excessive duration of high starting current and no change in system flow rate

C. Lower than normal running current and motor breaker trips

D. Lower than normal running current and no change in system flow rate

QUESTION: 55

A centrifugal pump is operating with the following parameters:

Speed	= 1,800 rpm
Current	= 40 amperes
Pump head	= 20 psi
Pump flow rate	= 400 gpm

What will be the approximate value of pump head and current if pump speed is decreased to 1,200 rpm?

A. 13 psi, 18 amps

B. 13 psi, 12 amps

C. 9 psi, 18 amps

D. 9 psi, 12 amps

QUESTION: 56

Which one of the following causes starting current to be greater than running current for an ac induction motor?

A. The rotor does not develop maximum induced current flow until it has achieved synchronous speed.

B. After the motor starts, resistors are added to the electrical circuit to limit the running current.

C. The rotor field induces an opposing voltage in the stator that is proportional to rotor speed.

D. A large amount of starting current is required to initially establish the rotating magnetic field.

QUESTION: 57

Refer to the drawing of an electrical system power triangle (see figure below).

Which one of the following represents the power factor for this system?

A. A divided by B

B. A divided by C

C. B divided by A

D. B divided by C

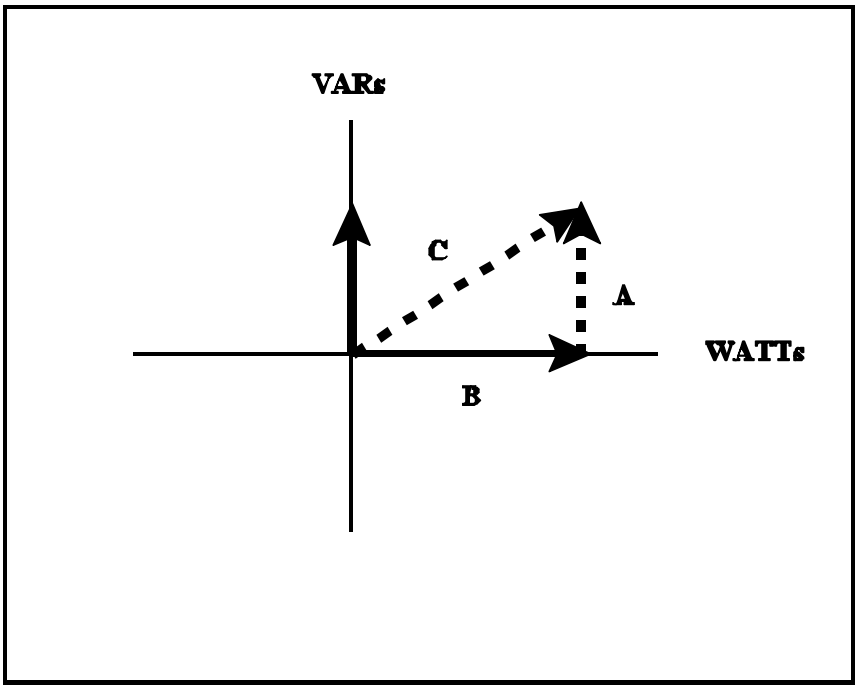

QUESTION: 58

A diesel generator (D/G) is the only power source supplying an electrical bus. If D/G frequency is decreased from 60 to 59.8 Hertz, D/G KW will be _____ and D/G amps will be _____. (Disregard the effect of the frequency change on individual reactive loads. Assume the D/G output breaker remains closed.)

A. the same; lower

B. the same; the same

C. lower; lower

D. lower; the same

QUESTION: 59

Reduced heat transfer performance in a heat exchanger will result from:

A. tube wall thinning.

B. turbulent flow in the tubes.

C. increased ? T between fluids.

D. gas collection in the shell.

QUESTION: 60

Refer to the drawing of a water cleanup system (see figure below).

All valves are identical and are initially 50% open. To raise the temperature at point 1, the operator can adjust valve _____ in the _____ direction.

A. A; shut

B. B; open

C. C; shut

D. D; open

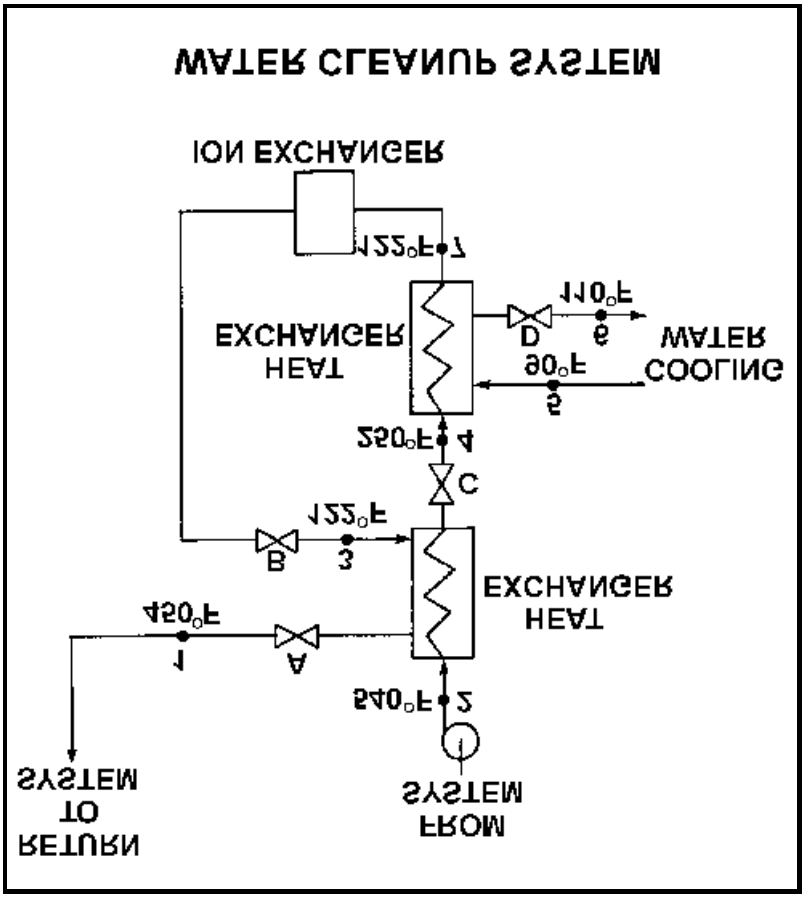

QUESTION: 61

Refer to the drawing of a lube oil heat exchanger (see figure below).

The lube oil heat exchanger is in service with the following inlet temperatures:

Lube oil inlet temperature: 130°F
Cooling water inlet temperature: 70°F

Assuming the cooling water flow rate exceeds the lube oil flow rate, which one of the following pairs of heat exchanger outlet temperatures is possible? (Assume both fluids have the same specific heat.)

	Lube Oil Outlet Temp	Cooling Water Outlet Temp
A.	100°F	90°F
B.	100°F	100°F
C.	110°F	90°F
D.	110°F	100°F

QUESTION: 62

A parallel-flow heat exchanger and a counter-flow heat exchanger are being used in the same water-to-water cooling application. Each heat exchanger is identical in construction and each heat exchanger has the same mass flow rates and inlet temperatures.

Under these conditions, the counter-flow heat exchanger will have the _____ heat transfer rate because _____.

A. lower; the average ? T across the tube walls is smaller

B. lower; the average outlet temperature of the two fluids is lower

C. higher; the average ? T across the tube walls is larger

D. higher; the average outlet temperature of the two fluids is higher

QUESTION: 63

A reactor is shut down at 400 psia during a maintenance outage when all forced decay heat removal is lost. Which one of the following will enhance natural circulation within the reactor vessel?

A. Increasing reactor vessel pressure to 500 psia

B. Increasing reactor vessel water level above the steam separators

C. Decreasing reactor vessel pressure to 300 psia

D. Decreasing reactor vessel water level to just above the top of the core

QUESTION: 64

A plant is operating at 100% power when air inleakage results in the buildup of noncondensible gases in the main condenser. Assume no operator or automatic actions occur that affects reactor power or turbine load.

Which one of the following will occur as a result of this air inleakage?

A. Decreased condensate temperature

B. Decreased pressure in the main condenser

C. Decreased suction pressure at the condensate pumps

D. Decreased condenser cooling water outlet temperature

QUESTION: 65

The demineralization factor of a demineralizer can be expressed as:

A. (Inlet Conductivity) - (Outlet Conductivity).

B. (Outlet Conductivity) - (Inlet Conductivity).

C. (Inlet Conductivity) ÷ (Outlet Conductivity).

D. (Outlet Conductivity) ÷ (Inlet Conductivity).

QUESTION: 66

A condensate demineralizer differential pressure (D/P) gauge indicates 9 psid at 50% flow. Over the next two days, plant power changes cause condensate flow to vary between 10% and 100%.

Which one of the following combinations of condensate flow and demineralizer D/P, if observed during the power changes, would indicate a detectable increase in the accumulation of corrosion products in the demineralizer?

	CONDENSATE FLOW	DEMINERALIZER D/P (PSID)
A.	10%	0.3
B.	25%	3.3
C.	75%	20.3
D.	100%	35.3

QUESTION: 67

A lower than expected differential pressure across a mixed-bed demineralizer is an indication of:

A. depletion of the resin.

B. channeling through the resin bed.

C. improper resin regeneration.

D. a decrease in inlet conductivity.

QUESTION: 68

What is the purpose of the Time Delay Coil (TD) in the motor controller diagram?

A. Ensures the motor cannot be started until the overload relays are reset.

B. Ensures the motor cannot be started until the accelerating coil is energized.

C. Allows the motor to come up to speed before placing the starting resistors in the circuit.

D. Allows the motor to come up to speed before bypassing the starting resistors.

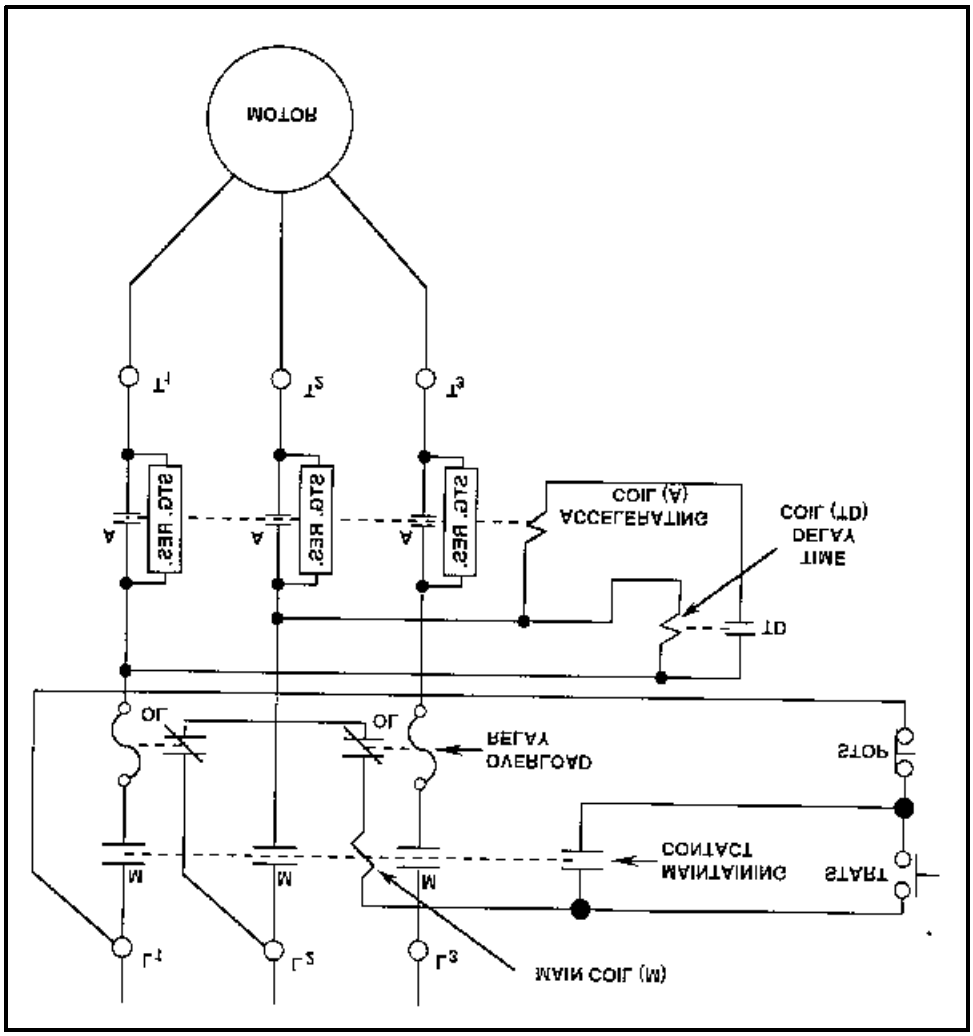

QUESTION: 69

Thermal overload devices will provide the first electrical protection for a pump motor in the event of:

A. a locked rotor upon starting.

B. an electrical short circuit.

C. gradual motor bearing damage.

D. a sheared shaft during operation.

QUESTION: 70

A typical main generator is being paralleled and connected to the grid. Generator voltage is slightly higher than grid voltage and the synchroscope is rotating slowly in the clockwise direction. The generator breaker is closed just as the synchroscope pointer reaches the 4 o'clock position.

Which one of the following will occur after the breaker is closed?

A. The breaker will remain closed and the generator will supply only MW to the grid.

B. The breaker will remain closed and the generator will supply both MW and MVAR to the grid.

C. The breaker will open due to overcurrent.

D. The breaker will open due to reverse power.

QUESTION: 71

Two identical 1000 MW electrical generators are operating in parallel supplying all the loads on a common electrical bus. The generator output breakers also provide identical protection for the generators. Generator A and B output indications are as follows:

Generator A	Generator B
28,000 KV	28,000 KV
60 Hertz	60 Hertz
150 MW	100 MW
25 MVAR (out)	50 MVAR (out)

A malfunction causes the voltage regulator set point for generator B to slowly and continuously decrease. If no operator action is taken, the current indication for generator B will:

A. initially decrease, and then increase until the output breaker for generator A trips on overcurrent.

B. initially decrease, and then increase until the output breaker for generator B trips on overcurrent.

C. decrease continuously until the output breaker for generator A trips on overcurrent.

D. decrease continuously until the output breaker for generator B trips on reverse power.

QUESTION: 72

A 480 Vac motor control center supplies a load through a breaker and a manual disconnect. If both isolation devices are operated to isolate the load, which one of the following sequences will provide the greatest level of personnel safety when deenergizing the load for maintenance and when reenergizing the load after the maintenance?

	DEENERGIZING	REENERGIZING
A.	Open breaker first	Shut breaker first
B.	Open breaker first	Shut disconnect first
C.	Open disconnect first	Shut breaker first
D.	Open disconnect first	Shut disconnect first

QUESTION: 73

Which one of the following types of neutrons in a reactor is more likely to cause fission of a U-238 nucleus in the reactor fuel? (Assume that each type of neutron remains in the reactor core until it interacts with a U-238 nucleus.)

A. Thermal neutron

B. Prompt neutron at birth

C. Delayed neutron at birth

D. Neutron at a U-238 resonance energy

QUESTION: 74

Which one of the following will increase the average distance traveled by a fission neutron to become thermal in an operating reactor? (Assume the neutron continues to migrate inside the reactor until it becomes a thermal neutron.)

A. Moderator temperature decreases

B. Average neutron energy decreases

C. Reactor coolant system pressure increases

D. Reactor coolant void percentage increases

QUESTION: 75

The following are combinations of critical conditions that may exist for the same reactor operating at 50% power at different times in core life. Which one of the following combinations indicates the largest amount of excess reactivity present in the reactor fuel?

	CONTROL ROD POSITION	REACTOR RECIR-CULATION FLOW
A.	25% rod density	75%
B.	50% rod density	50%
C.	25% rod density	50%
D.	50% rod density	75%

QUESTION: 76

In a subcritical reactor, K_{eff} was increased from 0.85 to 0.95 by rod withdrawal. Which one of the following is closest to the amount of reactivity that was added to the core?

A. 0.099 ? K/K

B. 0.124 ? K/K

C. 0.176 ? K/K

D. 0.229 ? K/K

QUESTION: 77

A reactor plant is being cooled down from 400°F to 250°F. Just prior to commencing the cooldown, readings for all source range nuclear instruments were 32 counts per second (cps). After two hours, with reactor coolant temperature at 300°F, source range count rate is 64 cps.

Assuming that the moderator temperature coefficient remains constant throughout the cooldown, what will be the status of the reactor when reactor coolant temperature reaches 250°F?

A. Subcritical, with source range count rate below 150 cps

B. Subcritical, with source range count rate above 150 cps

C. Critical, with source range count rate below 150 cps

D. Critical, with source range count rate above 150 cps

QUESTION: 78

A typical BWR reactor plant is operating at equilibrium 50% power when a control rod is ejected from the core. Which one of the following combinations of fission percentages, by fuel, would result in the shortest reactor period? (Assume the reactivity worth of the ejected control rod is the same for each case.)

	Percentage of Fissions by Fuel		
	U-235	U-238	Pu-239
A.	90%	8%	2%
B.	80%	9%	11%
C.	70%	9%	21%
D.	60%	8%	32%

QUESTION: 79

A reactor is operating at 75% power with the following conditions:

Power defect	= -0.0185 ? K/K
Shutdown margin	= 0.0227 ? K/K
Effective delayed neutron fraction	= 0.0061
Effective prompt neutron fraction	= 0.9939

How much positive reactivity must be added to make the reactor "prompt critical"?

A. 0.0061 ? K/K

B. 0.0185 ? K/K

C. 0.0227 ? K/K

D. 0.9939 ? K/K

QUESTION: 80

Which one of the following describes the net reactivity effect of a moderator temperature increase in an overmoderated reactor core?

A. Negative reactivity will be added because more neutron leakage will occur.

B. Negative reactivity will be added because more neutrons will be captured by the moderator.

C. Positive reactivity will be added because less neutron leakage will occur.

D. Positive reactivity will be added because fewer neutrons will be captured by the moderator.

QUESTION: 81

A reactor is operating at 70% power. Which one of the following will result in a less negative fuel temperature coefficient? (Consider only the direct effect of the change in each listed parameter.)

A. Increase in Pu-240 inventory in the core

B. Increase in moderator temperature

C. Increase in fuel temperature

D. Increase in void fraction

QUESTION: 82

The reverse power effect (or reverse reactivity effect) occasionally observed when a shallow control rod is withdrawn one or two notches is due to a relatively:

A. small local power decrease due to increased local Doppler effects.

B. small local power decrease due to the shadowing effect of nearby control rods.

C. large local power increase being offset by a void-related power decrease.

D. large local power increase being offset by a moderator temperature-related power decrease.

QUESTION: 83

A reactor is operating steady state at the point of adding heat (POAH) during a reactor startup near the beginning of core life. Reactor pressure is stable at 600 psig and main steam isolation valves are closed (no steam flow from reactor).

If a control rod is manually inserted for 5 seconds, and the reactor does not scram, when conditions stabilize, reactor power will be _____ and reactor vessel pressure will be _____.

A. at the POAH; 600 psig

B. at the POAH; less than 600 psig

C. less than the POAH; 600 psig

D. less than the POAH; less than 600 psig

QUESTION: 84

A reactor is operating at steady-state 50% power at the end of core life with all control systems in manual. The radial power distribution is symmetric and peaked in the center of the core, and the axial power distribution peak is slightly below the core midplane.

The tip of the most centrally-located control rod is currently located at the core midplane. The control rod is constructed of a homogeneous neutron absorber and the active neutron absorber length is exactly as long as the adjacent fuel assembly. The rod is manually inserted fully into the core, no other operator action is taken, and reactor power stabilizes at 42%.

If, instead, the control rod had been withdrawn fully from its core midplane position, the reactor would have experienced:

A. a larger absolute change in integral control rod reactivity.

B. a smaller absolute change in integral control rod reactivity.

C. a larger absolute change in reactor shutdown margin.

D. a smaller absolute change in reactor shutdown margin.

QUESTION: 85

If the void fraction surrounding several centrally located fuel bundles increases, the worth of the associated control rod(s) will:

A. decrease, because the average neutron energy in the fuel bundles decreases, resulting in fewer neutrons traveling from within the fuel bundles to the affected control rod(s).

B. decrease, because more neutrons are resonantly absorbed in the fuel while they are being thermalized, resulting in fewer thermal neutrons available to be absorbed by the affected control rod(s).

C. increase, because the diffusion length of the thermal neutrons increases, resulting in more thermal neutrons traveling from within the fuel bundles to the affected control rod(s).

D. increase, because neutrons will experience a longer slowing down length, resulting in a smaller fraction of thermal neutrons being absorbed by the fuel and more thermal neutrons available to be absorbed by the affected control rod(s).

QUESTION: 86

A fission product poison can be differentiated from all other fission products because a fission product poison:

A. has a longer half-life.

B. is formed as a gas and is contained in the fuel pellets.

C. is produced in a greater percentage of thermal fissions.

D. has a higher microscopic cross section for thermal neutron capture.

QUESTION: 87

Which one of the following describes the change in core xenon-135 concentration immediately following a power increase from 50% power equilibrium conditions?

A. Initially decreases due to the increased rate of xenon-135 radioactive decay.

B. Initially decreases due to the increased absorption of thermal neutrons by xenon-135.

C. Initially increases due to the increased xenon-135 production from fission.

D. Initially increases due to the increased iodine-135 production from fission.

QUESTION: 88

A reactor has been operating at steady-state 30% power for 3 hours following a one-hour power reduction from steady-state 100% power. Which one of the following describes the current core xenon-135 concentration?

A. Increasing toward a peak

B. Increasing toward equilibrium

C. Decreasing toward an upturn

D. Decreasing toward equilibrium

QUESTION: 89

A reactor has been operating at full power for several weeks when a scram occurs. When the reactor is brought critical 5 hours later, Xe-135 concentration will be highest in the _____ of the core, which causes thermal neutron flux to shift toward the _____ of the core.

A. center; center

B. center; periphery

C. periphery; center

D. periphery; periphery

QUESTION: 90

A reactor startup is being conducted and criticality has been achieved 15 hours after a reactor scram from two months of operation at full power. After 1 additional hour, reactor power is stabilized at 10^{-4}% power and all control rod motion is stopped.

Which one of the following describes the response of reactor power over the next 2 hours without any further operator actions?

A. Power increases toward the point of adding heat due to the decay of Xe-135.

B. Power increases toward the point of adding heat due to the decay of Sm-149.

C. Power decreases toward the shutdown neutron level due to the buildup of Xe-135.

D. Power decreases toward the shutdown neutron level due to the buildup of Sm-149.

QUESTION: 91

Refer to the drawing of K_{eff} versus core age (see figure below).

The change in K_{eff} from point 2 to point 3 is caused by:

A. depletion of fuel.

B. depletion of control rods.

C. burnout of burnable poisons.

D. burnout of fission product poisons.

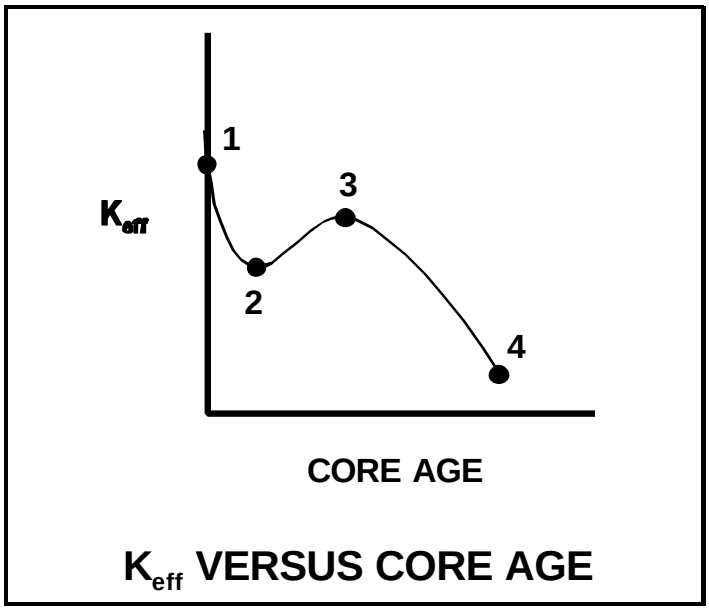

QUESTION: 92

A reactor is operating at 60% power immediately after a one-hour power increase from equilibrium 40% power. To keep reactor power at 60% over the next two hours, the operator must _____ control rods or _____ reactor recirculation flow rate.

A. insert; increase

B. insert; decrease

C. withdraw; increase

D. withdraw; decrease

QUESTION: 93

A reactor startup is in progress with the reactor currently subcritical.

Which one of the following describes the change in count rate resulting from a short control rod withdrawal with K_{eff} at 0.95 as compared to an identical control rod withdrawal with K_{eff} at 0.99? (Assume reactivity additions are equal, and the reactor remains subcritical.)

A. Both the prompt jump in count rate and the increase in stable count rate will be the same.

B. Both the prompt jump in count rate and the increase in stable count rate will be smaller with K_{eff} at 0.95.

C. The prompt jump in count rate will be smaller with K_{eff} at 0.95, but the increase in stable count rate will be the same.

D. The prompt jump in count rate will be the same, but the increase in stable count rate will be smaller with K_{eff} at 0.95.

QUESTION: 94

A reactor startup is in progress; control rod withdrawal has just been stopped to assess criticality. Which one of the following is a combination of indications in which each listed indication supports a declaration that the reactor is critical?

A. Period stabilizes at +200 sec; source range count rate is slowly increasing; inverse multiplication (1/M) value equals 0.000.

B. Period is approaching infinity; source range count rate increases and then stabilizes; inverse multiplication (1/M) value equals 0.111.

C. Period stabilizes at +200 sec; source range count rate is slowly increasing; inverse multiplication (1/M) value equals 1.000.

D. Period is approaching infinity; source range count rate increases and then stabilizes; inverse multiplication (1/M) value equals 1.111.

QUESTION: 95

During an initial fuel load, the subcritical multiplication factor increases from 1.0 to 4.0 as the first 100 fuel assemblies are loaded. What is the corresponding final k_{eff}?

A. 0.25

B. 0.5

C. 0.75

D. 1.0

QUESTION: 96

The following data was obtained at steady-state conditions during a reactor startup:

ROD POSITION (UNITS WITHDRAWN)	COUNT RATE (CPS)
10	360
15	400
20	450
25	514
30	600
35	720
40	900

Assuming uniform differential rod worth, at what approximate rod position will criticality occur?

A. 50 units withdrawn

B. 60 units withdrawn

C. 70 units withdrawn

D. 80 units withdrawn

QUESTION: 97

A reactor startup is in progress and criticality has just been achieved. After recording the critical rod heights, the operator withdraws a control rod for 20 seconds to establish a stable positive 30-second reactor period. One minute later (prior to reaching the point of adding heat), the operator inserts the same control rod for 25 seconds.

During the insertion, the reactor period will become negative:

A. immediately when the control rod insertion is initiated.

B. after the control rod passes through the critical rod height.

C. just as the control rod passes through the critical rod height.

D. prior to the control rod passing through the critical rod height.

QUESTION: 98

If a reactor power increase is accomplished using only the control rods, which one of the following would result in the greatest amount of negative reactivity feedback from the void coefficient?

A. A void fraction increase from 5% to 10% at beginning of core life

B. A void fraction increase from 5% to 10% at end of core life

C. A void fraction increase from 40% to 45% at beginning of core life

D. A void fraction increase from 40% to 45% at end of core life

QUESTION: 99

A plant is operating normally at 50% power when a steam break occurs that releases 5% of rated steam flow. Assume no operator or protective actions occur, automatic pressure control returns reactor pressure to its value prior to the break, and feedwater injection temperature remains the same.

How will reactor power respond?

A. Decrease and stabilize at a lower power level

B. Increase and stabilize at a higher power level

C. Decrease, then increase and stabilize at the previous power level

D. Increase, then decrease and stabilize at the previous power level

QUESTION: 100

A reactor has been operating for one hour at 50% power following six months of operation at steady-state 100% power. Which one of the following is the percentage of rated thermal power currently being generated by decay heat?

A. 1% to 2%

B. 3% to 5%

C. 6% to 8%

D. 9% to 11%