Nebraska Public Power District
Nebraska's Energy Leader

NLS2000020
November 14, 2000

U.S. Nuclear Regulatory Commission
Attention: Document Control Desk
Washington, D.C. 20555-0001

Gentlemen:

Subject: Proposed License Amendment
Service Water Backup to the Reactor Equipment Cooling Post LOCA Response to Request for Additional Information
Cooper Nuclear Station, NRC Docket No. 50-298, DPR-46

References:
1. Letter NLS990050 to US Nuclear Regulatory Commission from John H. Swailes (Nebraska Public Power District), dated June 15, 1999, "Proposed License Amendment Service Water Backup to the Reactor Equipment Cooling Post LOCA".

2. Teleconference between S. R. Mahler, et. al., (NPPD) and L. Burkhart, et. al., (NRC) on January 6, 2000, SW Backup to REC Verbal Request for Additional Information.

3. Teleconference between S. R. Mahler, et. al., (NPPD) and L. Burkhart, et. al., (NRC) on June 13, 2000, Clarification of SW Backup to REC Verbal Request for Additional Information.

By teleconference on January 6, 2000 (Reference 2), and June 13, 2000 (Reference 3), the Nuclear Regulatory Commission requested Nebraska Public Power District (District) to provide additional information regarding the Amendment Request submitted per Reference 1. The Attachments to this letter provide the requested additional information.

Additional issues identified by the District during a review of the original submittal (Reference 1) are also addressed in the Attachments. These issues involve the use of current revision(s) of materials in the original submittal, use of "Information Only" calculations as a reference and statements relating to equipment classification which have a potential to be misinterpreted. The District has evaluated the impact of these issues on the "No Significant Hazards Consideration Evaluation" and has determined that the conclusions contained in the original evaluation remain valid.

A001

Cooper Nuclear Station
P.O. Box 98 / Brownville, NE 68321-0098
Telephone: (402) 825-3811 / Fax: (402) 825-5211
http://www.nppd.com

Should you have any questions concerning this matter, please contact me.

Sincerely,

John H. Swailes
Vice President of Nuclear Energy

/rar
Attachments

cc: Regional Administrator w/attachments
USNRC - Region IV

Senior Project Manager w/attachments
USNRC - NRR Project Directorate IV-1

Senior Resident Inspector w/attachments
USNRC

NPG Distribution w/o attachments

Records w/attachments

STATE OF NEBRASKA)
)
NEMAHA COUNTY)

John H. Swailes, being first duly sworn, deposes and says that he is an authorized representative of the Nebraska Public Power District, a public corporation and political subdivision of the State of Nebraska; that he is duly authorized to submit this correspondence on behalf of Nebraska Public Power District; and that the statements contained herein are true to the best of his knowledge and belief.

John H. Swailes

Subscribed in my presence and sworn to before me this 14 day of November, 2000.

Wilma M. Werner
NOTARY PUBLIC

Wilma M. Werner
General Notary
State of Nebraska
My Commission Expires Oct. 26, 2002

1. What is the history and justification for Design Change (DC) 93-057 and subsequent 1998 Updated Safety Analysis Report (USAR) change? Specifically why is it acceptable to change from two independent closed loops to two cross-tied critical headers?

Section 9.3.2 of the Safety Evaluation Report (SER) for Cooper Nuclear Station (CNS), issued February 14, 1973, states the following:

"As originally submitted, the system could not support safe shutdown of the plant following a SSE considering a single concurrent failure of an active component in the Class I (seismic) piping system. Neither could the system support safe shutdown considering a single passive failure not concurrent with a SSE or DBA.

The system was redesigned to meet these requirements through up-grading of additional parts of the system to Class I (seismic) standards, and provision of interties to the Service Water System so that service water can be injected into the system to directly serve essential loads. We consider that the systems, as modified, can supply essential cooling services even after failure of all Class II (seismic) piping systems and a concurrent failure of an active component in the Class I (seismic) systems, or after any single failure of any passive component not concurrent with a SSE or DBA."

In 1993, it was discovered that the Reactor Equipment Cooling (REC) system required modifications to enable it to meet the licensing and design basis. DC 93-057, "SW and REC System Modifications," was prepared and implemented. Portions of the general description of DC 93-057 are as follows:

"This Design Change modifies the Service Water (SW) System and Reactor Equipment Cooling (REC) System to establish two electrically divisionally independent trains in each system. The REC System will not be mechanically separated into two trains. However, the SW-REC intertie backup will be upgraded to perform an essential function."

A portion of the modifications made include:

1) Valves SW-650MV and SW-651MV were rewired divisionally so that SW-650MV is Division I and SW-651MV is Division II.

2) Valves SW-886MV and SW-889MV were changed electrically from Division I to Division II (SW-886MV is presently a Division I powered valve as the Component Identification Codes for SW-886MV and SW-887MV were also interchanged per this DC). SW-REC intertie valves SW-886MV, SW-887MV, SW-888MV and SW-889MV were reclassified as essential and environmentally qualified to support the newly defined safety function.

3) The REC heat exchanger motor operated valves (REC-MOV-712MV and -713MV) were relocated to the outlet of the associated heat exchanger to allow for non-critical header isolation.

4) The REC-MO-695 close interlock to REC-MO-694, REC-MO-721, and REC-MO-722 was removed.

Upon completion of the DC, the REC System was not mechanically redundant and separated due to the critical REC loop return headers remaining physically cross-connected requiring valve REC-694MV to remain in the open position at all times. SW-REC intertie valves SW-886MV, SW-887MV, SW-888MV and SW-889MV were reclassified as essential to provide an essential SW backup to the REC system for cooling critical loads.

Even prior to DC 93-057, the critical loops were cross-connected during normal operations. It has been found that the critical loop cross-tie valves were in the normally open position since 1983. These valves were required to be open to address single failure concerns.

Final Safety Analysis Report (FSAR) Section X-6, paragraph 6.5.3, submitted March 1, 1971, and titled "Accident and Transient Operations" states, "Remote manual switches are used to close the motor operated valves in the cross-ties for separation of the two closed loops." This implies that even in 1971, before plant startup in 1974, the intent was to have the cross-tie valves open during normal plant operation.

In 1997, an Architect/Engineer (A/E) inspection was performed on the REC system. The concern that the original design basis requires "independent, distinct" loops of REC was raised at that time. Below is a portion of the response provided to the A/E inspection team. IFI 97-201-25 inferred a need to revise the Updated Safety Analysis Report (USAR) description of the system.

"A modification was performed in 1976 which removed the LPCI loop select logic and powered one RHR pump in each RHR loop from each electrical division. Changes to the REC System were not required as a result of this modification as the system could still provide required cooling given a single active failure so long as the cross-ties were open.

Such cross-connection is acceptable from the standpoint of the mechanical separation as the pressure boundary of the closed loops and the subsystems are designed as Seismic Class IS and, as such, a passive failure of this pressure boundary is not postulated under the CNS licensing basis."

As stated above, DC 93-057 implemented changes necessary for CNS to comply with the original design and licensing basis for the SW and REC systems. A 1998 change to the

USAR was generated, as a result of the 1997 A/E inspection, to clarify or make the terminology consistent with other plant documentation. This USAR section has been further revised as part of the USAR Re-baselining Project.

2. **The figure (COR002-19) provided with the NOED request clearly indicates that the DIV I pump discharge flow path returns to the DIV II pump suction. This is true for the DIV II flow path also. Why is this acceptable?**

In the early 1990's, it was discovered that the Division I SW loop supplied the Division II REC heat exchanger and vice versa. DC 93-057 was implemented and made many changes/upgrades to the REC and SW systems, one of which was to swap the labeling of the REC heat exchangers. This allowed the Division I REC heat exchanger to be supplied from the Division I SW subsystem and the Division II REC heat exchanger to be supplied from the Division II SW subsystem. This also swapped the returns such that the Division I critical loop returns to the Division II pumps and the Division II critical loop returns to the Division I pumps. This led to the requirement that REC-MOV-694MV remain in the open position or the REC system must be declared inoperable. The common surge tank design of the REC requires the Division I and Division II pumps to operate from a common suction. Note: DC 93-057 did not change the method of operation for the REC system (i.e., common suction for the pumps).

This is acceptable since CNS is not designed to withstand a passive failure concurrent with a Safe Shutdown Earthquake (SSE) or Design Basis Accident (DBA) and SW backup is currently credited to support safe shutdown of the plant following a SSE considering a single concurrent failure of an active component in the Class I (seismic) piping system and to support safe shutdown of the plant considering a single passive failure not concurrent with a SSE or DBA (see SER, section 9.3.2).

Per USAR Volume IV, Section X-6.5.3, "Either REC subsystem has sufficient capacity with one pump operating to transfer the critical services design cooling load during postulated transient or accident conditions." With REC-MOV-694MV remaining in the open position, the REC system can provide adequate cooling to both critical loops with one pump running. This is demonstrated each 18 months, in accordance with CNS Technical Specifications, by the performance of surveillance procedures 6.1REC.102, "REC Critical Subsystem Emergency Mode Flow Test (DIV 1)" and, 6.2REC.102, "REC Critical Subsystem Emergency Mode Flow Test (DIV 2)."

These surveillance procedures align each REC pump to both critical loops and verify adequate flow through the individual Emergency Core Cooling System (ECCS) components. This positively verifies adequate flow to the required components with the Division I critical loop returning to the Division II pumps and vice versa.

3. What is the level of verification for accuracy of COR002-19? Have walkdowns etc. been performed to provide the required level of confidence that this information is correct?

The accuracy of COR002-19 was evaluated against the Burns and Roe Drawings listed below for the REC system. This was done line by line and valve by valve. The divisional power was evaluated also against plant prints. No system walkdowns were done for this validation.

Burns & Roe Dwg 2036, Sheet 1, Rev N68
Burns & Roe Dwg 2031, Sheet 1, Rev N19
Burns & Roe Dwg 2031, Sheet 2, Rev N54
Burns & Roe Dwg 2031, Sheet 3, Rev N22
Burns & Roe Dwg 3007, Sheet 6, Rev N70

The accuracy of these drawings has been maintained over the years using the Drawing Control Process and Drawing Change Notice (DCN) requirements. The drawings listed are Control Room drawings and are updated or marked up before the system is made operational if any modifications to the system are made. In accordance with the Control Room Drawing As-Built Verification program, the systems have been walked down by system engineers and personnel specifically tasked to perform "as-built" walk downs. DCNs were prepared and implemented to correct any discrepancies.

4. Has the REC system been evaluated for fire induced hot shorts? For example: With the flow paths as described in question 2 and a fire which affects DIV I, what is the impact to DIV II pumps of a potential hot short in DIV I, if feasible, which would cause a spurious isolation of valve 697?

As stated in 10 CFR 50.48 and Generic Letter 81-12, plants docketed prior to January 1, 1979, which includes CNS, are required to comply with Sections III.G, III.J, and III.O of 10CFR50 Appendix R. Additionally, Section III.L is applicable to plants crediting alternative or dedicated shutdown capability to achieve compliance in specific fire areas. CNS credits alternative shutdown capability for the Cable Spreading Room as well as several other areas of the plant. Appendix R, Section III.L.3 includes the requirement that alternate shutdown capability accommodate post-fire conditions where offsite power is available and where offsite power is not available for 72 hours.

10CFR50 Appendix R requires that one train of equipment and systems comprising the means to achieve and maintain safe shutdown shall be free of fire damage. Fire damage is defined as circuit failures in associated cables as well as direct fire impingement upon the equipment or cables. Generic Letter 81-12, defines the circuit failure modes that must be considered. Similarly, Sections III.G.2 and III.L.7 of Appendix R define the circuit failure modes as hot shorts, open circuits, and shorts to ground. In accordance

with GL 86-10, Enclosure 2, Section 5.3.10, "The safe shutdown capability should not be adversely affected by any one spurious actuation or signal resulting from a fire in any plant area." This means hot shorts, open circuits and shorts to ground must be postulated to occur on every conductor associated with a safe shutdown component as a result of the fire, and any resulting spurious actuation evaluated for its effect on the ability to achieve safe shutdown following a fire.

The CNS Appendix R Safe Shutdown Analysis Report was revalidated in 1996 against the above stated requirements utilizing a series of project instructions which directed that these various cable fault conditions be postulated on cable conductors to determine if a particular cable needed to be included within the scope of the analysis. The analysis then utilized a fault tree software program (INDMS) to determine if a success path to safe shutdown existed for a fire in any fire area of the plant. For areas where a success path did not exist, individual failures of cables or components were further analyzed for the impact of the fire event and various coping strategies, such as manual actions, were specified by the project instructions so that a success path for safe shutdown could be demonstrated. This was done to ensure that the plant configuration adequately reflected the Design and Licensing Basis requirements.

Standard Review Plan (SRP) 9.5.1, page 18 states "Worst case" fires need not be postulated to be simultaneous with nonfire-related failures in safety systems, plant accidents, or the most severe natural phenomena.

The Appendix R Safe Shutdown Analysis documents the capability to safely shutdown the plant in the event of a fire, by limiting damage to systems required to achieve and maintain shutdown conditions. For the REC System, that would require providing sufficient cooling to the appropriate critical loop fan coil units to maintain the temperature in the quads at less than the maximum for the ECCS equipment installed in the quads.

The CNS investigation for Information Notice (IN) 92-18, "Potential for Loss of Remote Shutdown Capability During a Control Room Fire," found that certain valves were not susceptible to damage due to hot shorts, and those that were susceptible to damage were modified. In response to issues raised in IN 92-18, fire induced spurious operation due to hot shorts, both in DC 93-057 and a related modification package DC 92-109 "Alternate Shutdown Hot-Short Modification" addressed the concerns. As part of DC 92-109, a detailed electrical circuit analysis was initiated to determine the vulnerability of Motor Operated Valves (MOVs) to fire induced spurious operation from Hot Shorts, and implemented needed circuit modifications. The REC System valves were included in this evaluation and modifications were made as necessary.

In the event of a fire at CNS, personnel would refer to Emergency Procedure 5.4.3.1, "Post- Fire Operational Information." If the fire is located in one or more of six

predetermined areas, this procedure would refer personnel to Emergency Procedure 5.4.3.2, "Post-Fire Shutdown to Mode 4 Outside the Control Room."

Therefore, there is no detrimental impact due to hot shorts, spurious MOV movement would be corrected by manual operator actions based on the procedures.

5. **What are the allowed REC System Configurations during normal plant operations? Heat Exchanger (Hx) cross connect etc. (V-18, -19, -20). Example would be operating Div. I Hx cross connected with the Div. II pumps. General descriptions of various system line-ups are preferred vs. supplying procedures which would define the line-ups.**

During normal operations, 3 pumps and 1 Hx are required to supply the system cooling requirements. REC-V-18, -19, -20 and -21 are open. The critical loop cross-connect valves, REC-MOV-694MV and REC-MOV-695MV are maintained in the open position. If either cross-tie valve is closed, the REC system is declared inoperable. USAR Chapter X, Section 6.5.1 states:

"*Flexibility of system operation is provided with the interconnection of the two subsystems through crosstie lines equipped with normally open isolation valves. This assures the system will still function under a variety of degraded conditions. Remote manual switches are available to close the critical loop supply and return crosstie valves (REC-MOV-695MV and REC-MOV-694MV) for separation of the two critical loops for maintenance. However, these crosstie valves are required to remain open during normal plant operation to meet REC single failure criterion.*"

For operations where Hx A is in service and Hx B is removed from service, REC-MOV-713 (Hx B Outlet Valve) is closed, and REC-MOV-712 (Hx A Outlet Valve) is opened. For operations where Hx B is in service and Hx A is removed from service, REC-MOV-713 (Hx B Outlet Valve) is opened, and REC-MOV-712 (Hx A Outlet Valve) is closed.

During the hottest summer months (generally July and August), with elevated river temperatures, the heat exchangers are operated in parallel. This lineup consists of 3 pumps running and 2 heat exchangers in parallel. The outlet valve for both heat exchangers is open and REC-V-19 and 21 are closed.

Technical Specification Surveillance Requirement 3.7.3.3 requires REC valves to be maintained in required positions and checked on a frequency of 31 days. Procedure 6.CSCS.601, "Technical Specifications Verification of Flowpath Valve Lineup," Attachment 7 gives the REC system valve positions that are required to be checked.

If a critical loop is required to be put in service, the applicable critical loop supply valve (REC-MOV-711MV or REC-MOV-714MV) associated with the in-service heat exchanger is opened.

Attached Figures 1 through 3 are figures of the system showing the flow paths and valve positions for the system configurations described above.

6. **When SW is providing the cooling function to the REC critical headers under worst case flow demand conditions with minimum available pumps, what is the available SW flow margin? Has the effect of leak-by in REC valves used to isolate flow to non-critical portions of the system been considered when evaluating the ability of SW to perform the safety functions of both the SW and REC system.**

CNS calculation NEDC 97-087 revision 2, "Acceptance Criteria for the Quad's Fan Coil Units (FCUs)," determines the required service water and REC flow to the fan coil units. This calculation assumes 90F service water and fouling factors in accordance with manufacturers/industry standards for service water. The design maximum inlet water temperature for REC is 95F, with a lower fouling factor due to the cleanliness of the water. Additionally, 110% of predicted accident heat load is assumed. The required service water flow to remove 110% of the predicted accident heat load to the 4 quads is 141 gpm.

NEDC 97-087 also develops minimum flow requirements during surveillance testing to ensure adequate REC and SW flow under post-Loss of Coolant Accident (LOCA) conditions. This calculation determines the maximum allowable system resistance to ensure adequate flow would be achieved under either normal REC or direct SW cooling modes. The worst case scenario is considered to be the loss of a diesel generator (DG), leaving only one SW pump available. The head supplied by the SW pump is based on the pump being degraded to the worst-case In Service Testing (IST) condition, as described in the USAR and Design Criteria Document (DCD) -3, "SW and RHRSW Booster System." The head/pressure developed by the SW pump is adjusted for elevation and friction loss to determine the head available at the connection into the REC system. This surveillance testing ensures the line losses are maintained low enough such that the post-accident flows can be achieved. If the surveillance criteria were met, with no margin, the minimum expected SW flow under post-accident conditions (one SW pump, degraded to minimum IST limits) would result in approximately 174 gpm. This ensures under worst case conditions about 33 gpm of flow margin. This is considered adequate to account for any errors and potential valve leakage.

Re-aligning the SW system from cooling the REC Hx to flow directly into the REC system will result in a decreased total SW system flow and an increase in the SW flow to other SW loads (DG's, control room Heat Ventilation and Air Conditioning, etc.). The current calculation for the SW system (NEDC 96-029, "Review of MPR Report 'Cooper

Nuclear Station Post LOCA Service Water System Flow Variations with River Level'") shows that when the system is aligned to the REC Hx, there is a margin greater than 3,000 gpm while still meeting other SW flow demands (required SW flow to the REC Hx is 400 gpm). Decreasing the SW flow for direct cooling by re-aligning into the REC system will tend to increase the flow to other portions of the system, while still meeting the flow requirement through the REC system.

The issue of reactor building flooding due to SW flow out the REC surge tank vent has been evaluated in calculation NEDC 00-108. This calculation demonstrates that based on SW and REC system configurations and performance characteristics, flow of service water out the surge tank vent will not occur if the SW/REC back-up feature is initiated.

Have flow models been developed for REC and SW? If so, what has been done to validate these models for the actual plant design and configurations that are allowed?

This question was asked during the June 13, 2000, verbal request for additional information (Reference 3).

Calculation NEDC 96-029 models SW flow to the REC heat exchanger but not directly into the REC system. This calculation uses computer software to model the SW system. The SW model was benchmarked against surveillance test data for the post-LOCA configuration of the SW system. This surveillance includes the flow line-up associated with worst-case conditions (i.e., loss of one DG, leaving only one service water pump from the other division). The calculation performed benchmark cases for both of the subsystems. After benchmarking, the model was adjusted to include a service water pump degraded to worst-case IST conditions, to verify minimum service water flow requirements can be achieved under post-LOCA conditions.

There is no computer flow model for the REC system. As previously discussed, calculation NEDC 97-087 developed acceptance criteria for the REC surveillance in order to ensure the REC line losses do not restrict REC flows beyond design basis limits.

The above calculations have been performed under CNS procedures and the CNS Quality Assurance Program.

7. **Are there TS required surveillances of the SW/REC back-up valves and associated switches and circuitry?**

There are no Technical Specification requirements for specifically testing the key-lock switches. Technical Specifications do require that the SW backup cross-tie valves be operable in order for the associated REC subsystem to be considered operable.

The operability of these valves is demonstrated by quarterly testing per IST procedure 6.REC.201, "REC Motor Operated Valve Operability Test (IST)."

The testing consists of operating the valves from the associated key-lock switch on vertical board "M" (located in the control room) and observing proper valve actuation.

These valves are part of the CNS IST program.

8. **What is the level of surveillance, leakage acceptance criteria, and maintenance on the REC boundary valves? MO712, 713, 700, 702, 1329 etc.**

CNS has two programs that test the subject valves. The programs include IST stroke time surveillance and MOV diagnostic testing. It should be noted that valves REC-MOV-702MV and REC-MOV-709MV are additionally included in the leakage testing program.

REC-MOV-700MV, REC-MOV-702MV, REC-MOV-709MV, REC-MOV-712MV, REC-MOV-713MV and REC-MOV-1329MV are stroke timed in the closing direction quarterly. REC-MOV-702MV and REC-MOV-709MV are leak tested during reactor shutdown for refueling to demonstrate containment isolation capability in accordance with the CNS Appendix J Program.

The REC non-essential heat load isolation valves listed above are MOV Program valves, and as such are subject to periodic Valve Operation Test and Evaluation System (VOTES) diagnostic testing, on a frequency determined by capability margin and risk-significance. The VOTES tests are valuable predictive maintenance tools, since comparison of current with past test results may indicate increased friction internal to the valve. Increased internal valve friction (disc/seat or disc/guides) may be a precursor to through-seat leakage.

The current local leak rate test results for REC-MOV-702MV and REC-MOV-709MV are as follows: 0.72 SCFH and 0.80 SCFH respectively.

Valves REC-MOV-700MV and REC-MOV-1329MV are similar to REC-MOV-702MV and REC-MOV-709MV. These four valves are 150 lb. gate valves which are located in the same operating environment. It is reasonable to conclude that the leak rates on REC-MOV-700MV and REC-MOV-1329MV would be approximate to those seen on REC-MOV-702MV and REC-MOV-709MV.

Valves REC-MOV-712MV and REC-MOV-713MV are 150 lb. butterfly valves. Troubleshooting on REC-MOV-713MV which was performed October 19, 1999, detected no leak-by using acoustics and thermography. REC-MOV-712MV is located in the same operating environment. It is reasonable to conclude that the leak rate on REC-

MOV-712MV would be approximate to that seen on REC-MOV-713MV and that there is no gross leakage past either valve.

The preventive maintenance items performed for REC-MOV-702MV and 709MV are also performed for REC-MOV-700MV and 1329MV. Also, the preventive maintenance items performed for REC-MOV-713MV are performed for REC-MOV-712MV.

The current VOTES diagnostic test results show that the valves (REC-MOV-700MV, 702MV, 709MV, 712MV, 713MV and 1329MV) have greater than 10% torque and thrust margin above their required torque and thrust.

Considering the service requirements of the REC valves (i.e., relatively low pressure, relatively low temperature, demineralized water, etc.) and the results of the VOTES diagnostic testing, it is reasonable to assume that leakage through these valves, if any, is minimal.

Based on the flow margin available as discussed in response to Question 6 and the reasonable assumption of minimal valve leakage, there is no concern with boundary valve leakage.

9. **Since the alarms indicated in the Amendment Request are not essential, what Control Room indications will be used to alert the operator of the need to initiate the SW/REC back-up?**

Even though the control room indications are not classified as essential, these indications have been proven to be highly reliable and will be used to alert operators of the need to initiate SW/REC backup.

The annunciators are considered reliable for the following reasons:

a. The 120 VAC power requirements for the annunciator system are provided from the no break power panel. The no break power panel is supplied power normally by inverter 1A via 250 VDC Bus 1A and MCC-R in an emergency. The 250 VDC Bus 1A and MCC-R are essential power sources.

b. The annunciator system power distribution has been configured so that no single power source failure will inhibit the capability or performance of the system. The multiplexer cabinet and central control unit cabinet is provided redundant 125 VDC sources from both the Division I and Division II station batteries. Fusing schemes have been installed so that a gross equipment failure will not impair the operation of additional equipment fed from the same source.

c. During surveillance testing the annunciators are checked along with indications. During an accident the plant operators would check appropriate indications to assure the REC system is operating properly.

A discussion from USAR Chapter VII-1, paragraph 1.7.3.6, "Annunciator Circuits," is provided below:

"Annunciator circuits are not Class IE systems. The following discusses the design features of the annunciator system:

Several features have been included in the design of circuitry for annunciators to minimize common mode failures. First, the station d-c battery systems are connected to all d-c annunciators through d-c to a-c to d-c converters using transformer circuits to isolate the supply systems from the annunciator systems. Each set of d-c to a-c to d-c converters powers a string of annunciator cabinets with a separate and redundant set of converters powered from a separate battery system. With this method of power distribution and isolation, a ground on any annunciator circuit does not appear on any d-c battery supply system and vice versa. Furthermore, a ground on any annunciator circuit powered by one converter will not interrupt the annunciator circuits because the redundant feed will power the annunciator circuits. Second, the power distribution redundancy allows for no single failure to reduce the integrity of any part of the annunciator ground alarm. Undervoltage conditions will be detected by the fact that only one of the two lamps will light in the associated lamp box. Finally, with this circuit arrangement, failure or grounds on any portion of the annunciator system cannot disable the entire annunciator system nor can it cascade down through the d-c battery systems because of the fusing, division of circuits, and isolation of power sources.

In the event of loss of annunciator circuits, the plant computer system is used as backup for all major plant parameters."

Procedures have also been put in place to aid the operators in determining if a loss of all REC has occurred and specify the actions that are to be taken. Procedure 5.2.4, "Loss of all REC," identifies symptoms which are extensive to cover possible causes and this aids the operators in determining if there may be a failure in the REC system (use of numerous indications and plant actions would confirm if REC is operating properly or validate loss of REC). This procedure directs the operators to perform the required actions and leads to initiating SW backup to REC if normal REC cooling is not assured.

The Control Room annunciators available to alert the operators of the need to initiate the Service Water back-up cooling function are listed below:

REC system low pressure	3 pressure switches

	NOTE: 2 of the pressure switches are available even if the non-critical header is isolated
Surge Tank low level	1 level switch
Residual Heat Removal (RHR) pump cooling water trouble	1 flow switch - low flow and 1 temperature switch on each of 4 RHR pumps (total of 8 sensors)
REC pump failure	1 sensor at each REC pump breaker (total of 4 sensors)
REC pump low discharge pressure (total of 4 sensors)	1 pressure switch at each REC pump discharge
ECCS pump area Fan Coil Unit (FCU) low flow	1 flow switch at each of 5 FCUs (2 RHR, 2 Core Spray (CS), 1 High Pressure Coolant Injection (HPCI))
ECCS pump area high temperature	1 temperature switch at each of 5 FCUs (2 RHR, 2 CS, 1 HPCI)

NOTE: The following annunciation is also available if the non-critical headers are not isolated. A LOCA without Loss of Offsite Power, or with both Emergency Diesel Generators operating, creates the potential for the non-critical headers to remain in service.

Drywell Fan Coil Unit low flow	4 flow switches
Recirculation pump seal cooler low REC flow	1 flow switch at each Recirculation pump (total of 2 sensors)
Recirculation pump motor generator oil cooler low REC flow	1 flow switch
Control Rod Drive pumps low REC flow	1 flow switch
Reactor Water Cleanup (RWCU) pump low REC flow	1 flow switch at each RWCU pump (total of 2 sensors)
Non-Regenerative Heat Exchanger low REC flow (RWCU)	1 flow switch

Fuel Pool Cooling Heat Exchanger 1 flow switch
low REC flow

10. Preferential initiation of DIV II back-up is required to avoid the District identified single failure. What human factors are in place to ensure the operator does not initiate the wrong division? What measures are in place to control the keys for the key-lock switches?

The keylock switches are clearly marked for Division I and Division II and are approximately 5 inches apart as shown on the vertical board "M" layout in the accompanying photos (Figures 5 through 7). The board is arranged with Division I on the left and Division II on the right with the keylock switches arranged in the same relationship. The keys for the keylock switches are in the key depository on the side of the Reactor Operator desk in the Control Room.

11. Critical headers must be cross-tied to ensure REC system operability during normal operation. To address the identified single failure, the cross-tie valves must be closed. How does this affect RHR operability? Provide description of RHR function, one pump operation quad cooling requirements. What is the most limiting quad heat-up scenario?

As identified in NLS990050, a scenario has been postulated which may result in inadequate cooling to the critical loops. The scenario is as follows:

a) The REC loops are not split and thus valve REC-MOV-695, which is powered from Division I, is open.
b) The operator starts the Division I SW system backup train and thus now REC-MOV-695 and valve SW-MOV-886 are both open.
c) The single failure of Division I is now assumed and therefore neither REC-695 or SW-886 can be closed. Note no other failure has occurred to this point.
d) Since there is now no service water cooling to the REC critical loops, the operator will start the Division II SW backup train. However, the Division II cooling flow could be diverted into the open Division I SW backup path since both REC-695 and SW-886 are open and cannot be closed from the control room, and entry into the Reactor Building is not an option.

CNS's solution to this scenario is specified in NLS990050 and is as follows:

"To prevent this unlikely event from occurring, the District, as part of the implementation of this License Amendment, will revise the station procedure to require the operator to preferentially initiate the Division II train of the SW/REC intertie when this function is required and when the REC critical loops are not split. With this provision in place the single failure vulnerability, discussed above, is eliminated."

By preferentially initiating Division II SW backup, cooling to at least one critical loop can be assured (one critical loop is capable of providing the required cooling capacity to support the required systems) following the loss of Division II power by initiating Division I SW backup and closing REC-MOV-695 which is powered from Division I sources.

With Division I SW backup initiated and REC-MOV-695 closed, the following equipment will be available:

"A" RHR pump will have power and REC cooling available.
"B" RHR pump will have power available.
"A" CS pump will have power and REC cooling available.

Although "B" RHR pump will not have REC cooling available, a previous modification permanently removed the equipment hatch plugs at the 903'-6" and 881'-9" elevations in the RHR quad, allowing the continuous operation of a single RHR pump in each quad via natural, convective cooling.

Figure 4 provides a general arrangement layout of the above equipment.

The largest calculated quad heat load occurs in the south east quad on a loss of Division I power. This would normally not be a concern, since the Core Spray pump and associated FCU are powered from the same divisions. However, a loss of REC cooling to this fan coil, 7 to 30 days following event initiation, would result in loss of cooling to the quad, with continued operation of the Core Spray pump.

The Environmental Qualification (EQ) program at CNS indicates that the equipment located in the Reactor Building Quad areas is qualified to at least 200°F. Since, the qualification of the EQ equipment located in the quads exceeds 200°F for High Energy Line Break conditions, a brief temperature excursion due to ECCS pump motor heating will not impact the qualification/operability of any of the components. Calculations (NEDC 97-085, Revision 3 and NEDC 92-093, Revision 4) indicate that the quad temperature during bounding accident conditions will not approach 200°F (this evaluation modeled the temperature profile for one hour following loss of REC and the temperature did not approach 200°F). These calculations start with the initial condition that the CS and RHR pumps are operating with REC flow for 7 days post accident then REC flow is lost. Calculations determined that if it takes 20 minutes to restore cooling via the SW backup, the temperature will return to normal (with ECCS pump and fan coil unit operating) within one hour of losing REC flow and not exceed 200°F within that one hour time period. Therefore, it can be concluded that there is more than sufficient time for operator action to initiate SW backup and the operation of ECCS pumps will not be affected.

Provide details related to SW/REC cross-tie piping and methodology which will ensure that silting will not prevent the establishment of cross-system flow.

This additional request was made during the June 13, 2000, verbal request for additional information (Reference 3).

Water in the SW system comes from the Missouri River. Water that flows into the plant through the Service Water System contains sand (silt) suspended in the water. The amount of sand suspended in the water will vary with the time of year.

Within the Service Water system, it has been found that sediment deposition occurs as the water flow slows (less that 3.5 ft/sec), and significant sedimentation occurs when the water flow approaches stagnation.

Silt and sediment deposits routinely collect in locations within the Service Water System where flow stagnates. In most cases, the deposits are easily dislodged by flushing with flow of increased velocity. This is because the deposits are chiefly composed of non-cohesive sand particles. When saturated, sand forms a fluidized bed. Initially, saturated sand flows like a thick milkshake. As more water dilutes the mixture, the sand then disperses into the flow and the milkshake consistency thins out. However, when water is drained from the sand and it is no longer saturated, the sand appears relatively firm.

On both ends of the intertie there is an area of stagnant water that is susceptable to silting. A portion of the intertie piping was found to be approximately 90% filled with sand during Refueling Outage RE19. The 4 inch diameter horizontal section of pipe from SW-MOV-888MV to where it connects into the 18 inch vertical pipe is filled with stagnant water. SW-MOV-888MV is normally closed. However, the other end of the pipe, which connects into the 18 inch pipe, is open. Thus, the 4 inch diameter horizontal pipe fills with water provided from the 18 inch diameter vertical line.

As figure 8 shows, water flowing down the vertical 18 inch pipe flows past the opening to the 4 inch pipe. The shear that occurs between the water flowing in the vertical 18 inch pipe and the stagnant water in the 4 inch horizontal pipe causes small vortices to develop in the 4 inch pipe. Because of these vortices, a small amount of water from the 18 inch pipe circulates into and back out of the 4 inch pipe. When this occurs, the water slows down and "drops" some of the sand it is carrying into the 4 inch pipe.

As the sand deposition forms a "hill" near the entrance to the 4 inch pipe, as shown in figure 8, circulation within the 4 inch pipe diminishes. Given time, the "hill building" process blocks circulation within the pipe. When this occurs, sand deposition in the 4 inch pipe ceases. Thus, the sand deposition process is self-limiting.

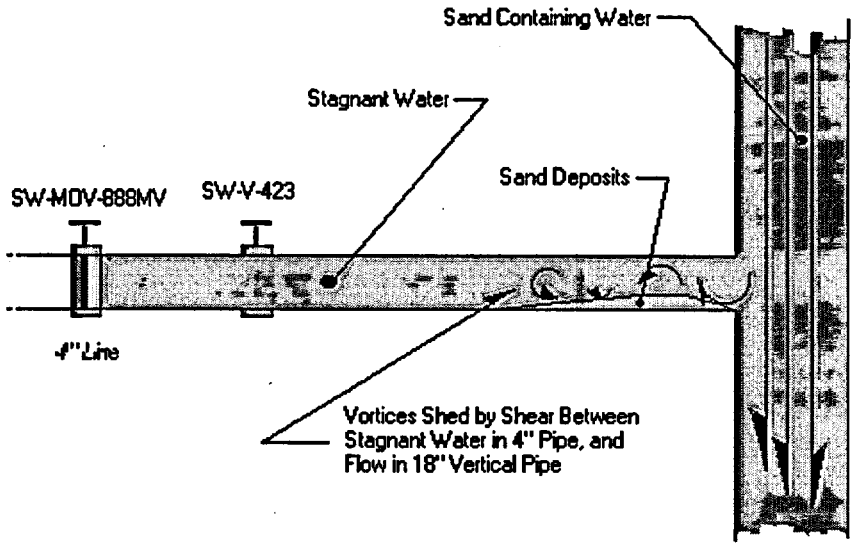

Figure 8. How Sand Deposits Develop in the 4" Inter-Tie Pipe

Because the material being deposited in the 4 inch pipe is primarily non-cohesive, well-graded sand (i.e., sand whose distribution of diameter size is generally evenly spread out without a pronounced central limit), it will be easily dispersed by increased flow in the 4 inch pipe. During an emergency of the type in which the inter-tie between SW and the REC system would be needed, return flow through the SW-MOV-888MV would flush the silt out of the pipe.

In the past, it has been reported that sand has collected in the 14 inch diameter Service Water Booster Pump (SWBP) suction piping at a rate of 0.5 inches per day. The suction piping to SWBP-B has been 50% filled by such sand in one week, and SWBP-A suction piping has been 60% or more filled in just 5 days. In both cases, the accumulated sand was readily swept away by increased flow from the pumps when they were started.

While this discussion has considered the specific 4 inch line associated with SW-MOV-888MV, it is expected that similar sand accumulations will be found in the other return line associated with SW-MOV-889MV. Further, similar sand accumulations will likely be found in the other side of the inter-tie, the 4 inch supply lines associated with SW-MOV-886MV and SW-MOV-887MV.

As discussed, the silt deposits are easily dispersed with flow having increased velocity. Sand accumulations on the SW-REC cross-tie supply piping are expected to return to solution and travel through the system in the same manner as sand that is present in the service water. As stated in the question 6 response, the minimum required value

established for surveillance procedures is approximately 174 gpm. Using this minimum flow, the velocity through the SW-REC cross-tie supply header would be nearly 4.5 ft/sec. This is adequate to disperse the sand accumulations.

In addition, Procedure 6.REC.201, "REC Motor Operated Valve Operability Test (IST) which is performed to meet a Technical Specification frequency of 92 days, establishes flow through the 4 sections of piping which are susceptable to accumulations of silt as part of the acceptance criteria. There are no flow rate requirements associated with this procedure however, performance of this procedure demonstrates the ability to initiate flow through the piping which will disperse the accumulated deposits.

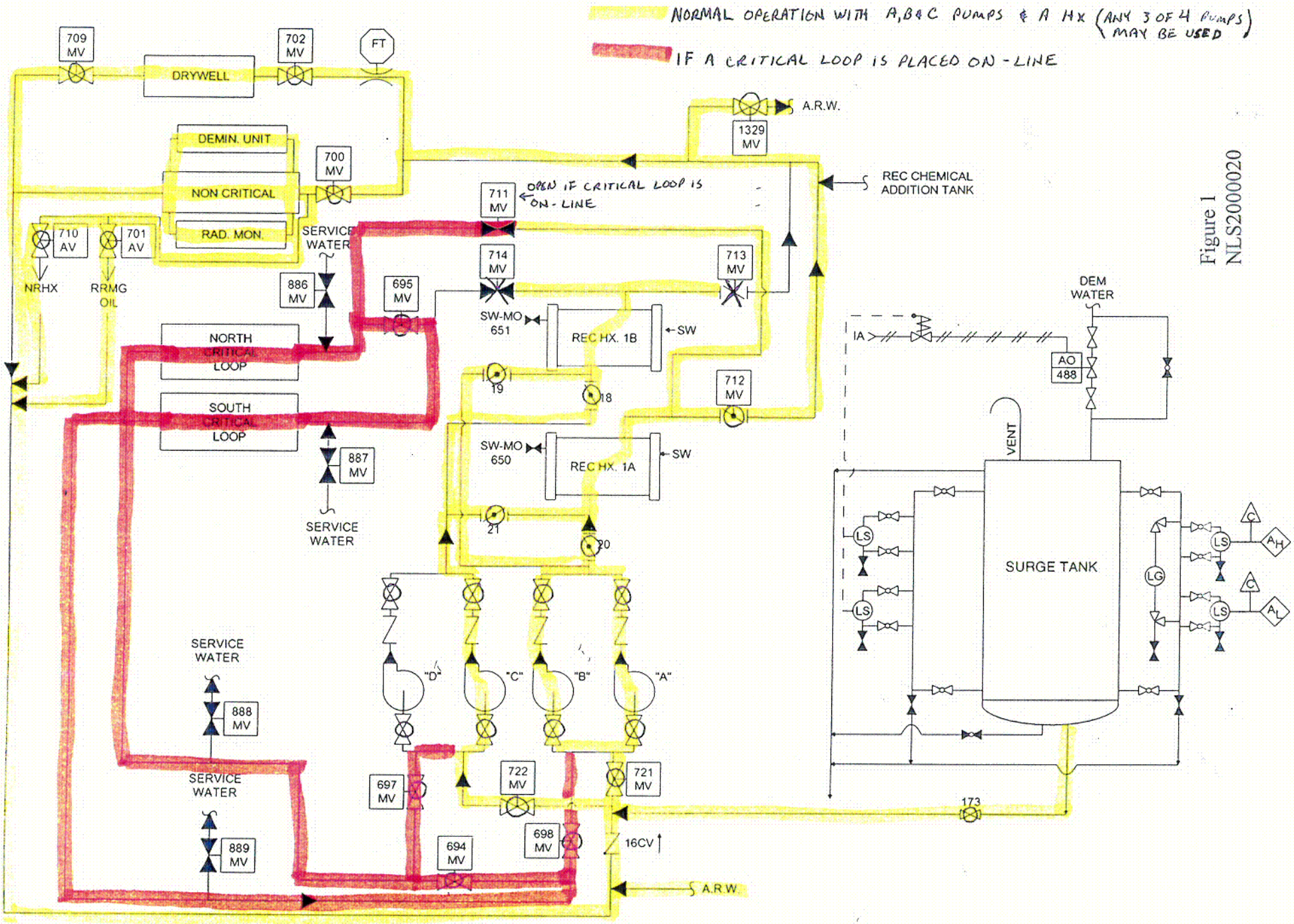

Figure 1
NLS2000020

REC SYSTEM Normal Power Operation

Figure 1 Rev. 11

COF 12-19

NORMAL OPERATION WITH A, B & C PUMPS & B HX (ANY 3 OF 4 PUMPS MAY BE USED)

IF A CRITICAL LOOP IS PLACED ON-LINE

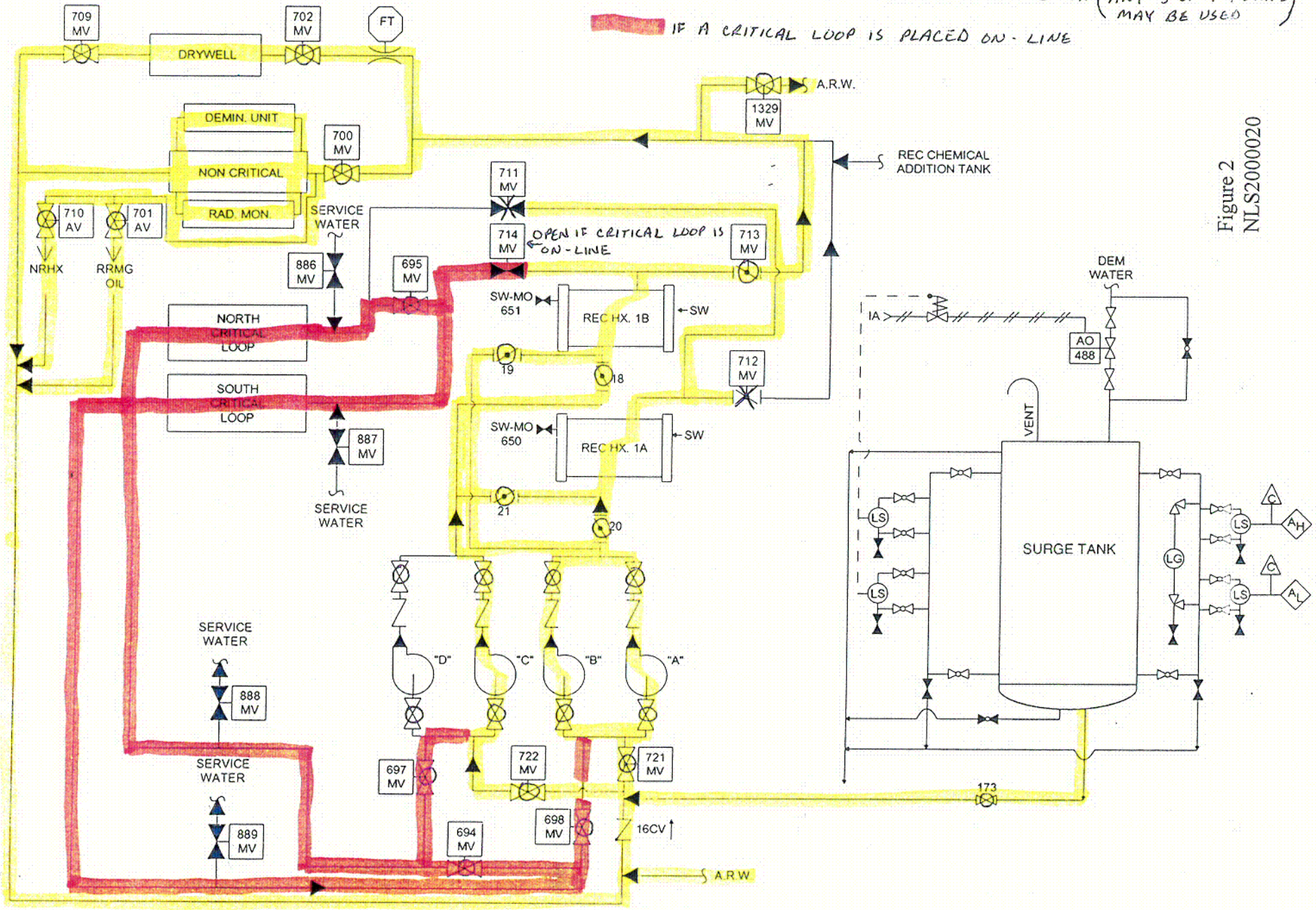

Figure 2
NLS2000020

REC SYSTEM Normal Power Operation

Figure 1 Rev. 11

COB...02-19

L-2

NORMAL OPERATION WITH A, B & C PUMPS & HX'S IN PARALLEL (ANY 3 OF 4 PUMPS MAY BE USED)

EITHER 711MV OR 714MV MAY BE OPENED IF A CRITICAL LOOP IS REQUIRED

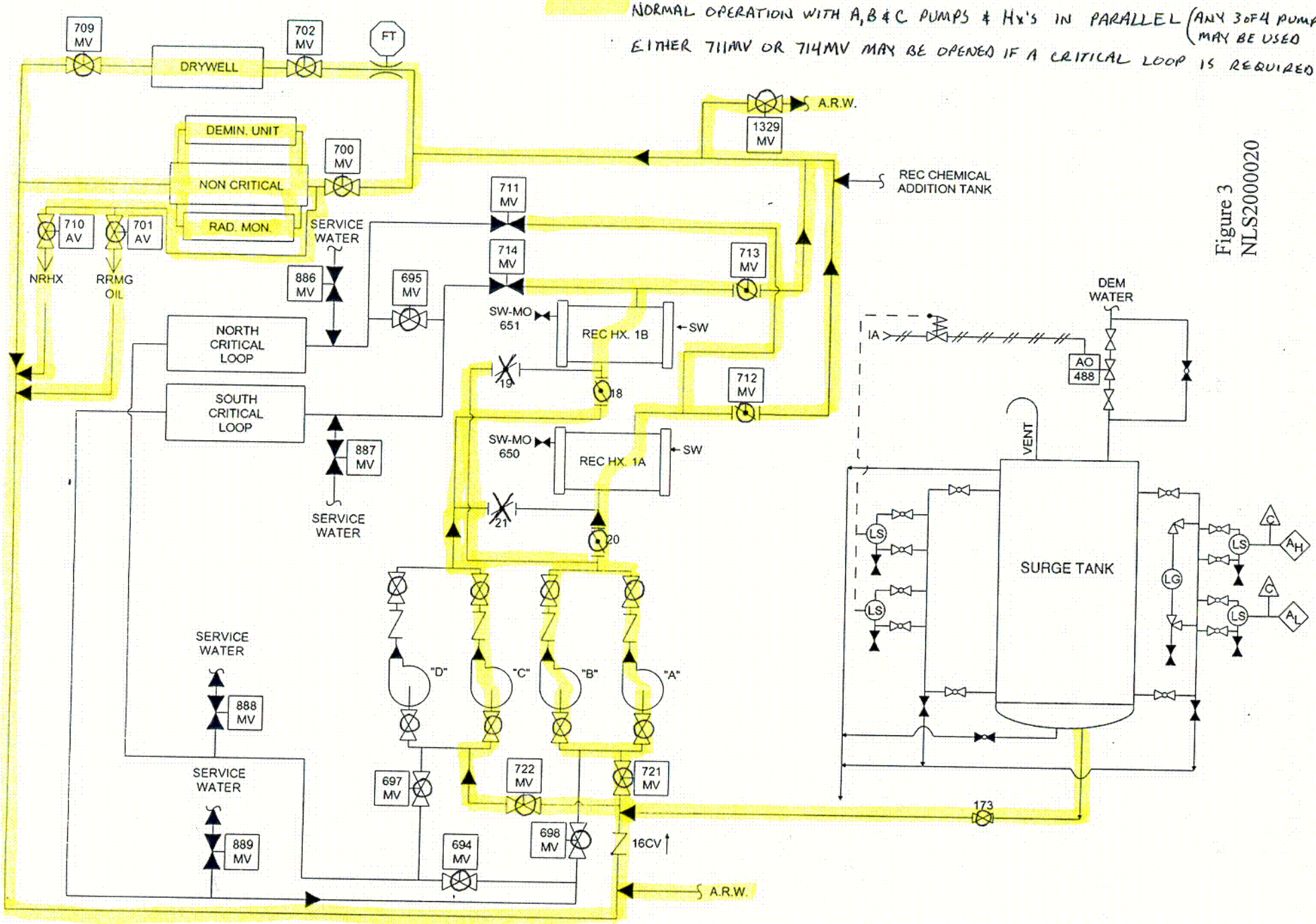

Figure 3
NLS2000020

REC SYSTEM Normal Power Operation

Figure 1, Rev. 11

CO 02-19

C-3

f:\home\jyknapp .\cxa06271\cor00219.fig\fig1.r11

CXA06271

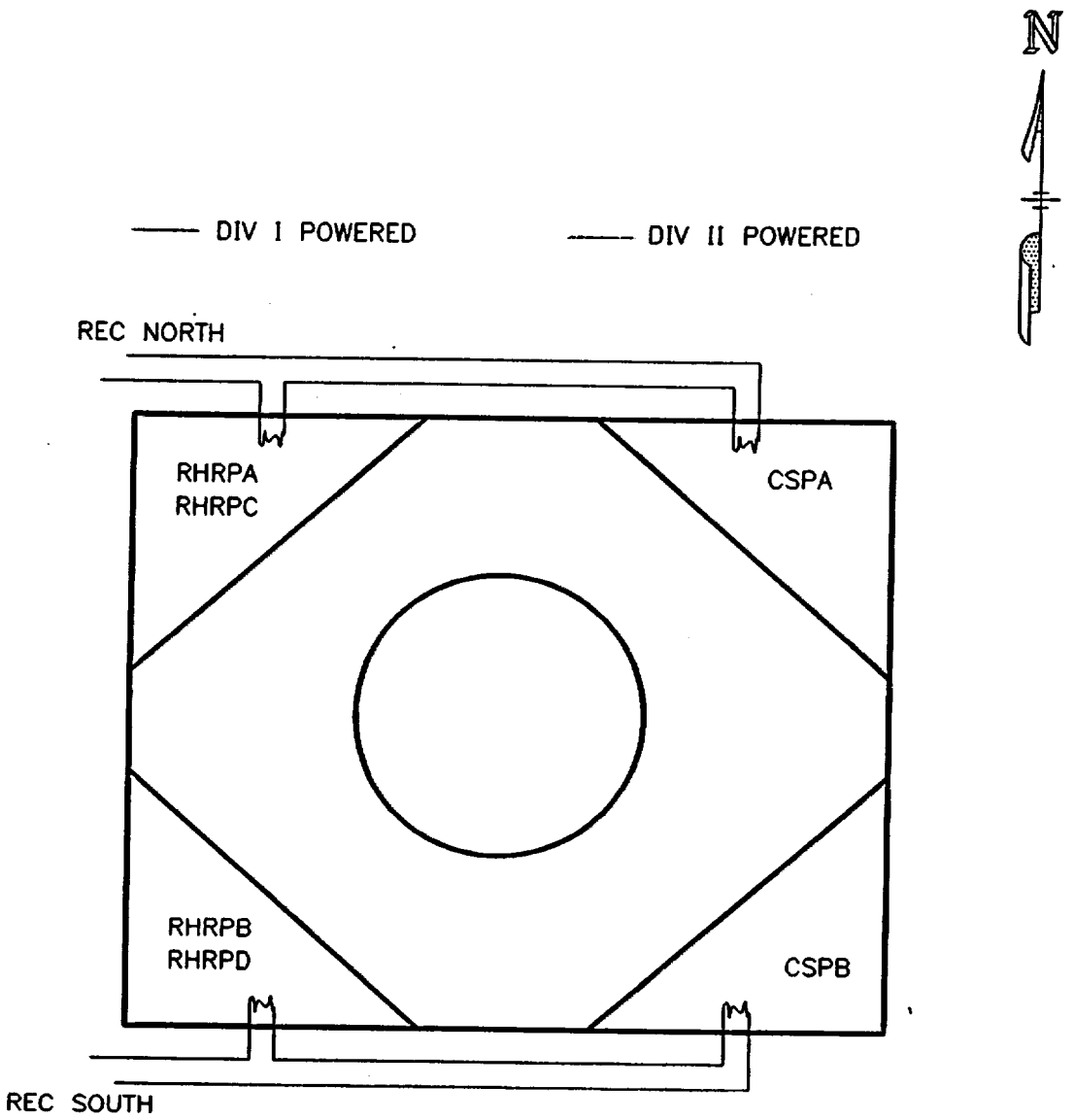

CADD DRAWING			
DO NOT REVISE MANUALLY			
CADD FILE: DRAWING			
ENGINEERING SKETCH	PREPARER	DATE	Nebraska Public Power District
	INDEPENDENT REVIEW	DATE	
			REV

Figure 4
NLS2000020

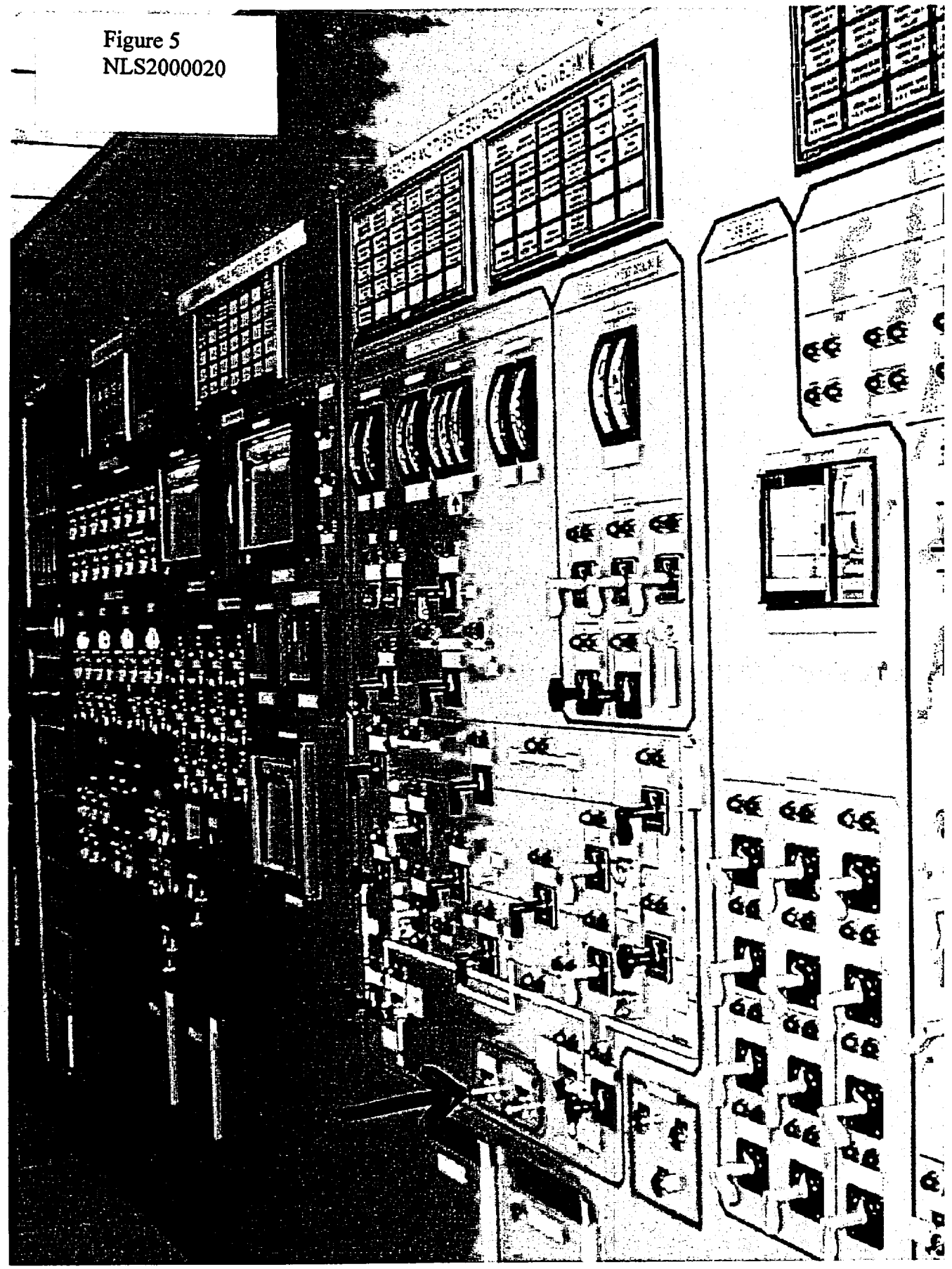

Figure 5
NLS2000020

Figure 6
NLS2000020

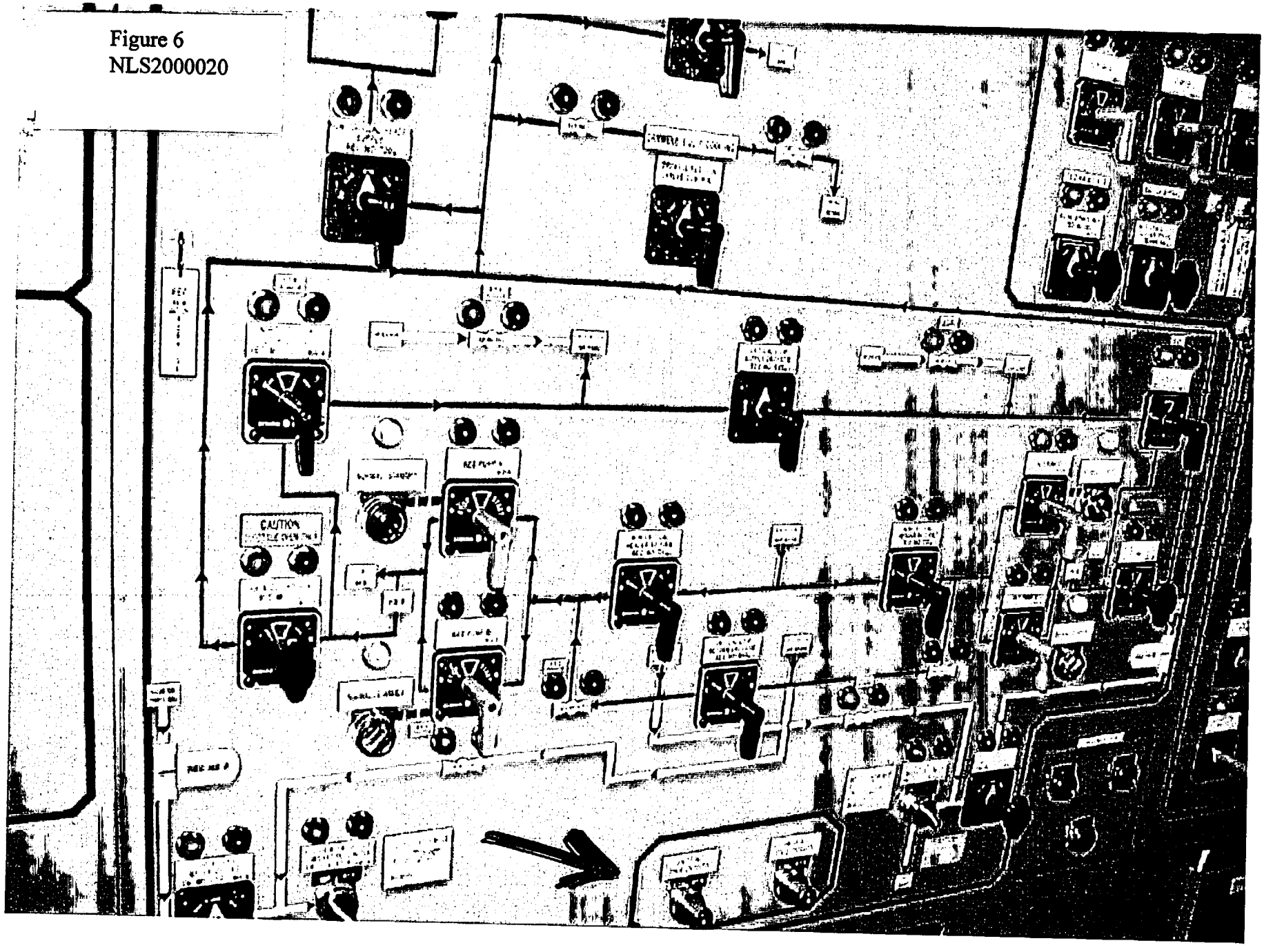

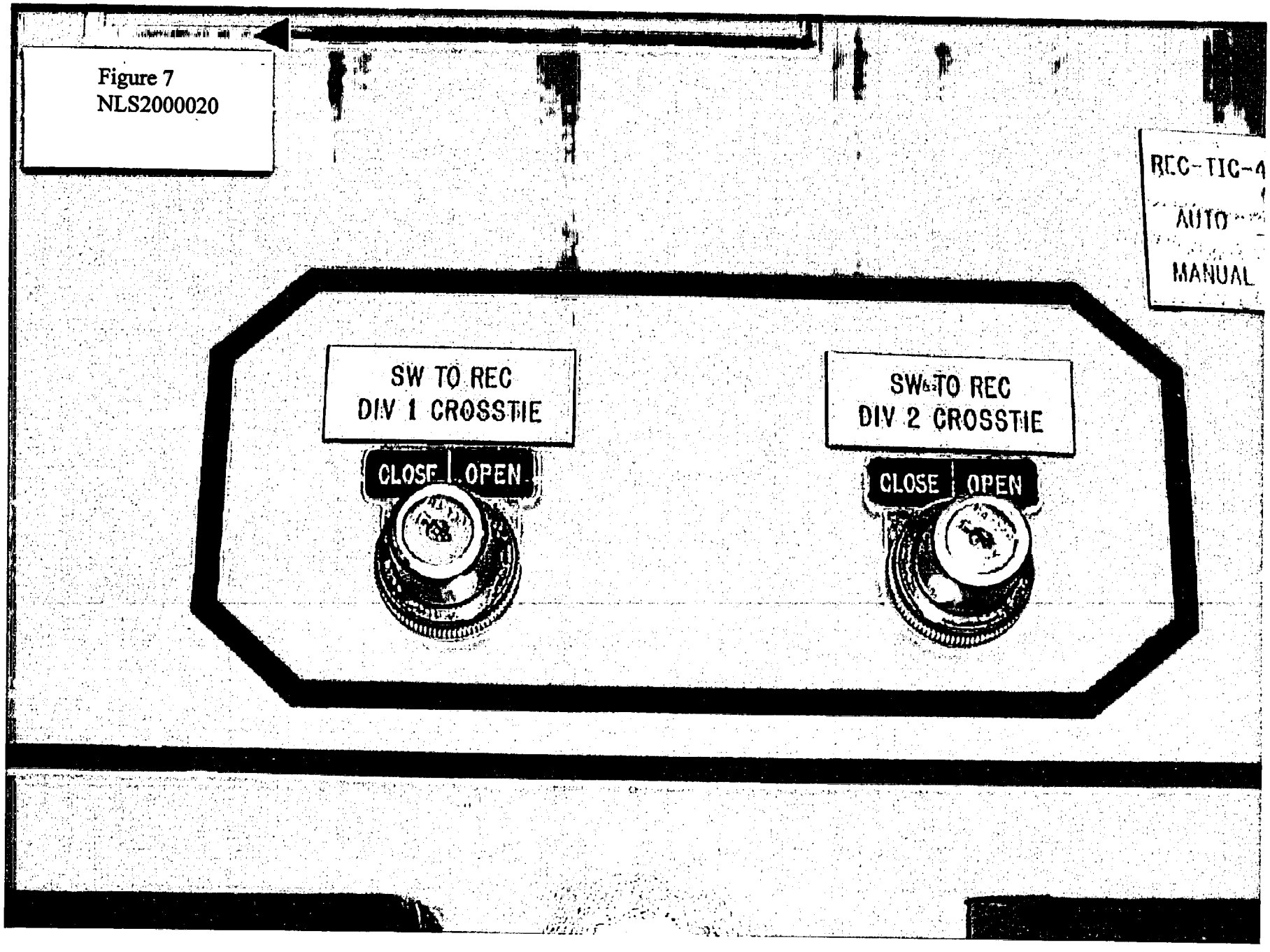

Figure 7
NLS2000020

Evaluation of Issues Associated with NLS990050, "Proposed License Amendment, Service Water Backup to the Reactor Equipment Cooling Post LOCA"

A review of NLS990050 identified issues which require clarification and revision. The identification of the need for these revisions was entered into and investigated by the CNS corrective action program. These issues and their resolution are detailed below.

1. Figure 1, a simplified sketch of the REC system critical loops and main components did not reflect current plant configuration.

   Figure 1, which was associated with FSAR Question and Answer (Q&A) 10.5, represented the system when the SW/REC intertie was installed in response to the Q&A. Design Change DC 93-057, implemented in 1993 to correct design discrepancies in the SW and REC systems, relocated several valves and changed divisional power supplies to other components. This issue was identified in December 1999, and a verified sketch which represent the current plant configuration was submitted as an attachment to letter NLS990126, "Request for Enforcement Discretion and Supplement to Proposed License Amendment Request."

2. Attachment 3 to NLS990050, marked USAR pages describing the proposed change, contained pages that were not the current revision.

   Marked up pages from the current revision of the USAR are included as Attachment 3 to this submittal.

3. Calculation NEDC 97-085 was referenced as documentation of the ECCS pump room (Quad Area) heat-up calculations. This calculation documents the area heat-up rate assuming normal plant operation ambient conditions.

   The response to Request for Additional Information question 11 provides the appropriate calculation reference and results of the heat-up evaluation assuming the ECCS pumps have been operating for seven days in response to a Loss of Coolant Accident.

4. Calculation NEDC 97-074, a Status 2 (Information Only) calculation, was referenced as documentation of the Service Water system capabilities to supply the cooling function for the REC critical loops.

   The Status 1 (As Built) calculation which documents Service Water system performance is NEDC 97-087, and is referenced in the response to Question 6..

5. The Safety Evaluation (Attachment 2 to NLS990050) states: "The electrical equipment used to initiate and maintain the REC/SW intertie is presently classified as EQ."

   Some of the equipment necessary to perform this function is located in a mild environment and therefore is not necessary to be qualified to EQ requirements. A review of equipment necessary to initiate and maintain the REC/SW intertie indicates that the equipment is appropriately qualified for its installed location.

6. The Safety Evaluation (Attachment 2 to NLS990050) states: "The REC low pressure alarm is essential and redundant so that this alarm meets the requirements for single failure." This statement has been interpreted to imply that the Control Room Annunciation for this function is essential.

   The sensors and components in the low pressure instrumentation loop, which also actuates the non-critical header isolation, are essential. The Control Room Annunciator panel is non-essential. The basis for reliance on Control Room annunciation as well as a listing of additional Control Room annunciation which would alert the operator(s) of the need to initiate the SW back-up to REC cooling function is detailed in the response to RAI question 9.

A radiation indicator-recorder is located in the system to monitor radioactivity level. On detection of a high radiation level an alarm will sound automatically in the Control Room.

6.5.3 Accident and Transient Operations

Either REC subsystem has sufficient capacity with one pump operating to transfer the critical services design cooling load during postulated transient or accident conditions.[97]

Low pressure in the common discharge header signals an alarm in the main Control Room and automatically closes the Division I motor-operated valves (REC-MOV-700MV, REC-MOV-702MV, and REC-MOV-1329MV) in the supply headers to the non-critical services. Drywell isolation valve (REC-MOV-702MV) can be manually reopened by remote manual switch override if necessary.[10] Low pressure in the 'A' or 'B' heat exchanger's outlet signals an alarm in the main Control Room and closes the associated Division II motor-operated valve in the supply line to the nonessential services. This action is initiated by a pressure switch in each heat exchanger's outlet which will send a signal to close REC-MOV-712MV if a low pressure condition is sensed in the 'A' heat exchanger outlet, and REC-MOV-713MV if a low pressure condition is sensed in the 'B' heat exchanger outlet. There is a 40 second time delay associated with automatic REC isolation valve closure to allow for REC system pressure recovery during operational transients so that the potential for unwanted auto isolations are minimized.[12]

The ECCS equipment (RHR, Core Spray and HPCI pumps) is located in the basement of the reactor building in the following compartments:[11]

Compartment	System	No. of Pumps
North-East	Core Spray	1
North-West	RHR	2
South-East	Core Spray	1
South-West	RHR	2
HPCI	HPCI	1

In each RHR Quad, area cooling is provided by a single cooler, with the Northwest Quad's cooler energized from Division I and the Southwest Quad's cooler powered from Division II power source. The RHR pumps in each Quad are powered from separate divisional power sources. A CS injection leg break coincident with a divisional power failure would require the operation of both surviving RHR pumps, one in each Quad, to meet minimum ECCS requirements to assure adequate core cooling. This would result in a loss of area cooling for one of the surviving RHR pumps. The equipment hatch plugs at the 903'-6" & 881'-9" elevations in each RHR Quad are removed [26], allowing the continuous operation of a single RHR pump in each Quad via natural, convective cooling. [27,28] Forced area cooling is, however, still required for concurrent pump operation, and must be brought on line no later than 45 minutes after cooling is lost.[29]

SW-MOV-650MV and SW-MOV-651MV will receive an auto-open signal to open the valve to the approximate 10% open position, if they are not already open, 30 seconds after the Group VI Isolation signal is received and divisional power is restored. After SW-MOV-650MV and SW-MOV-651MV are approximately 10% open, REC-MOV-711MV and REC-MOV-714MV will receive auto-open signals commencing REC flow to the North and South Critical Loops. This will commence REC cooling to the Critical Loops within 30 seconds after the

Group VI Isolation signal is received and Bus 1F and 1G voltage is restored. The active safety function of the 30 second time delay for the Service Water to REC crosstie valves (SW-MOV-650MV and SW-MOV-651MV) auto-open, is to provide adequate time delay to prevent the opening of the REC critical loop supply valves (REC-MOV-711MV and REC-MOV-714MV) during voltage dips caused by ECCS pumps starting (0-15 seconds) but open REC-711MV and REC-714MV before the non-critical headers isolation valves are fully closed (t=60 seconds). This interlock prevents allowing REC coolant to the critical loops from a standby or isolated REC heat exchanger. The actual Service Water valve position of 10% open is not part of the safety-function of this interlock because the Operator will have to manually adjust SW-MOV-650MV and SW-MOV-651MV during the post-accident time period depending on which REC heat exchanger was in service prior to the accident.

Under a transient (that leads to a Group VI isolation), a Loss of Offsite Power or a LOCA scenario, the following automatic operations occur;

1. An automatic start of the Standby REC pumps 20 seconds after power is restored to the critical buses (in the event of a Loss of Offsite Power).

2. An automatic opening signal to the Division I Critical Service Header Motor Operated Valve (REC-MOV-711MV) 30 seconds after a Group VI Isolation signal is received and SW-MOV-650MV has automatically opened to its minimum flow position or is already at its minimum flow position. REC-MOV-711MV will be fully open approximately 120 seconds after power is restored to the critical buses.

3. An automatic opening signal to the Division II Critical Service Header Motor Operated Valve (REC-MOV-714MV) 30 seconds after a Group VI Isolation signal is received and SW-MOV-651MV has automatically opened to its minimum flow position or is already at its minimum flow position. REC-MOV-714MV will be fully open approximately 120 seconds after power is restored to the critical buses.

Sufficient pressure is generated by one pump to preclude starting of additional REC pumps. In the event of pump failure, the low pressure condition in the essential services supply header is indicated in the Control Room and another pump is manually started by a remote manual switch to correct the low pressure condition.

Control for REC Pumps 1-C and 1-D can be transferred to the alternate shutdown panels. The pumps can then be controlled independent from the Control Room in the event of a fire.

Insert A

6.6 Safety Evaluation

The REC System is designed with sufficient redundancy so that no single active system component failure nor any single active component failure in any other plant system can prevent it from achieving its safety objective. Two subsystems, each with full heat transfer capacity are provided. It is concluded that the Safety Design Bases are met.

SW-MOV-888MV and SW-MOV-889MV from the Control Room (see Burns and Roe Drawing 2036, Sheet 1). The concept uses only service water to cool the compartment air coolers; operation of the REC pumps and heat exchangers is not required. The introduction of service water into the two loops of the REC system assures the AEC passive failure criteria for REC is met.

6.7 Inspection and Testing

REC pumps and motor operated isolation valves can be tested, during normal operation, to assure they are capable of meeting design function by operating manual switches in the Control Room and observing the position lights.

The pumps and motor-operated valves are tested at least quarterly. The pumps are tested to ensure each can deliver 1175 gpm at 65 psid once/3 months and after pump maintenance.

Heat transfer capacity performance testing, of REC heat exchangers, is conducted at least once per operating cycle to ensure design heat removal capabilities are met for heat exchangers cooled by service water.[116]

The REC Surge Tank level is monitored and maintained above the calculated minimum level. The REC system leakage rate is also maintained less than the calculated rate to ensure system will operate for the entire 30-day post DBA LOCA event duration. No credit is taken for any non-essential make up source.

See "Change to USAR X-6.7

Insert A to USAR X-6.5.3

Service Water can be intertied to REC to provide a backup cooling water supply to the Reactor Building Quad coolers in a post LOCA environment. This function is utilized if the REC surge tank level decreases below the minimum required for adequate net positive suction head to the REC pumps. This feature is credited after 7 days to ensure satisfactory Quad cooling for a 30-day DBA LOCA event duration. See Section X-6.6.1 for further discussion on the Service Water intertie.

Change to USAR X-6.7

The REC Surge Tank level is monitored and maintained above the calculated minimum level. The REC system leakage rate is also maintained less than the calculated rate to ensure the system will operate for ~~the entire 30-day~~ at least seven days in a post DBA LOCA event ~~duration. No~~ without crediting ~~is taken for~~ any non-essential make up source.

Correspondence Number: NLS2000020

The following table identifies those actions committed to by the District in this document. Any other actions discussed in the submittal represent intended or planned actions by the District. They are described to the NRC for the NRC's information and are not regulatory commitments. Please notify the NL&S Manager at Cooper Nuclear Station of any questions regarding this document or any associated regulatory commitments.

COMMITMENT	COMMITTED DATE OR OUTAGE
None	N/A