Indiana Michigan
Power Company
Cook Nuclear Plant
One Cook Place
Bridgman, MI 49106
616-465-5901

INDIANA MICHIGAN POWER

November 7, 2000

C1100-01
10 CFR 50.54 (f)

Docket No.: 50-315

U.S. Nuclear Regulatory Commission
ATTN: Document Control Desk
Mail Stop O-P1-17
Washington, DC 20555-0001

Donald C. Cook Nuclear Plant Unit 1
NRC GENERIC LETTER (GL) 96-06
ASSURANCE OF EQUIPMENT OPERABILITY AND CONTAINMENT INTEGRITY DURING DESIGN BASIS ACCIDENT CONDITIONS
(TAC NOS. M96801 AND M96802)

References:

1. Letter from E. E. Fitzpatrick (I&M) to Nuclear Regulatory Commission Document Control Desk, AEP:NRC:1256A, "NRC Generic Letter 96-06, Assurance of Equipment Operability and Containment Integrity During Design-Basis Accident Conditions," dated January 28, 1997.

2. Letter from E. E. Fitzpatrick (I&M) to Nuclear Regulatory Commission Document Control Desk, AEP:NRC:1256B, "Donald C. Cook Nuclear Plant Units 1 and 2, "NRC Generic Letter 96-06, Assurance of Equipment Operability and Containment Integrity During Design-Basis Accident Conditions," dated May 20, 1997.

3. Letter from J. B. Hickman (NRC) to E. E. Fitzpatrick (I&M), "Donald C. Cook Nuclear Plant, Units 1 and 2 - Request for Additional Information Re: Generic Letter 96-06 (TAC NOS. M96801 and M96802)," dated July 9, 1997.

4. Letter from A. C. Bakken III (I&M) to Nuclear Regulatory Commission Document Control Desk, "Donald C. Cook Nuclear Plant Unit 2, NRC Generic Letter (GL) 96-06, Assurance of Equipment Operability and Containment Integrity During Design Basis Accident Conditions (TAC NOS. M96801 And M96802)," C0800-10, dated August 15, 2000.

A072

Printed on recycled paper

This letter provides a revised response to Nuclear Regulatory Commission (NRC) Generic Letter (GL) 96-06 for Unit 1, and supercedes the previous GL 96-06 responses applicable to Unit 1 (References 1 and 2).

GL 96-06 requested licensees to assess the potential for piping to experience two-phase flow or waterhammer in cooling water systems serving containment air-coolers and the potential to overpressurize isolated piping sections inside containment following postulated design basis events. Indiana Michigan Power Company (I&M) submitted its initial response to the GL in References 1 and 2, following which the NRC requested additional supporting information in Reference 3. Subsequent to the request for additional information, I&M performed a review of the GL 96-06 issues, and submitted a revised Unit 2 response, Reference 4, with a commitment to provide a revised response for Unit 1 by November 1, 2000. In discussions with the NRC Licensing Project Manager on November 1 and November 6, 2000, I&M provided new estimated submittal dates, with the final committed date being November 9, 2000.

Attachment 1 to this letter provides the revised response to Generic Letter 96-06 for Unit 1. The response is summarized as follows:

Two-Phase Flow in Cooling Water Systems Serving Containment Air-Coolers

The design of Donald C. Cook Nuclear Plant (CNP) Unit 1 does not include safety-related containment air coolers, but does include a non-safety-related containment ventilation system for maintaining containment temperatures within acceptable limits during normal operation. Cooling water for the system is supplied by the non-essential service water (NESW) system. I&M determined there was no potential for the occurrence of two-phase flow in the lower containment ventilation units, and the upper containment cooling units, which computer models predict would experience two-phase flow during normal operation, would not be significantly affected during an accident.

Waterhammer in Cooling Water Systems Serving Containment Air-Coolers

I&M determined that there is a potential for a waterhammer to occur in the NESW piping. However, a stress analysis determined that the support loads were small and the piping stresses were considerably less than the yield strength of the piping material.

Overpressuriation of Isolated Piping Sections Inside Containment

I&M has resolved the overpressurization concern regarding isolated piping inside containment by determining that the piping sections fall into the following categories: those having inherent pressure protection, those whose normal operating temperature exceeds the predicted accident temperature, those having previously installed relief valves, those sections for which a modification has been performed to preclude overpressurization, those that have been determined to be acceptable using ASME Section III, Appendix F criteria; and those for which a procedure change has been made to ensure that water is not trapped between isolation valves.

The use of ASME Section III, Appendix F is an interim measure that is consistent with the guidance in GL 96-06, Supplement 1. Prior to the next scheduled Unit 1 refueling outage, I&M will provide a permanent resolution for the affected piping sections.

Conclusion

The issues identified in GL 96-06 are not a concern for CNP Unit 1. All issues identified in GL 96-06 have been resolved on either a final or interim basis for Unit 1. For those issues that have been resolved on an interim basis, I&M has committed to achieve a final resolution in a timely manner, consistent with the guidance in GL 91-18, "Information To Licensees Regarding NRC Inspection Manual Section On Resolution Of Degraded And Nonconforming Conditions."

Attachment 2 provides the flow diagrams for the systems that were analyzed using ASME Section III, Appendix F, criteria. Attachment 3 provides drawings of valves credited with lifting when subjected to increased pressure, and Attachment 4 identifies those actions committed to by I&M in this submittal.

Should you have any questions, please contact Mr. Wayne J. Kropp, Director of Regulatory Affairs, at (616) 697-5056.

Sincerely,

M. W. Rencheck
Vice President Nuclear Engineering

/dmb

Attachments

c: J. E. Dyer
MDEQ – DW & RPD, w/o attachments
NRC Resident Inspector
R. Whale, w/o attachments

AFFIRMATION

I, M. W. Rencheck being duly sworn, state that I am Vice President of Indiana Michigan Power Company (I&M), that I am authorized to sign and file this request with the Nuclear Regulatory Commission on behalf of I&M, and that the statements made and the matters set forth herein pertaining to I&M are true and correct to the best of my knowledge, information, and belief.

Indiana Michigan Power Company

M. W. Rencheck
Vice President

SWORN TO AND SUBSCRIBED BEFORE ME

THIS 7th DAY OF November, 2000

Pamela J. Schmaltz
Notary Public

My Commission Expires _____

PAMELA J. SCHMALTZ
Notary Public, Berrien County, MI
My Commission Expires Oct 2, 2004

ATTACHMENT 1 TO C1100-01

REVISED RESPONSE TO GENERIC LETTER (GL) 96-06

Background

GL 96-06, "Assurance of Equipment Operability and Containment Integrity During Design-Basis Accident Conditions," requested licensees to perform the following actions:

Requested Action Items 1 and 2

Determine if containment air cooler cooling water systems are susceptible to either waterhammer or two-phase flow conditions during postulated accident conditions.

Response to Requested Action Items 1 and 2

The design of Donald C. Cook Nuclear Plant (CNP) Unit 1 does not include safety-related containment air coolers. CNP employs an ice condenser in the containment design whose primary function is the absorption of thermal energy released during a loss-of-coolant accident (LOCA), a main steam line break (MSLB), or a feedwater line break (FWLB) inside containment. This absorption of energy limits the initial peak pressure in the containment and aids in maintaining the long-term containment pressure below the design basis value of 12 psig. Long term post-accident containment cooling is provided by both the emergency core cooling system and the containment spray system.

As described in the Updated Final Safety Analysis Report Section 5.5.1, the CNP design does include a non-safety-related containment ventilation system to maintain containment temperatures within acceptable limits for operation of equipment and personnel access during normal operation. The Unit 1 containment includes four upper compartment ventilation units, four lower compartment recirculation/ventilation units, and two instrument room ventilation units. Cooling water for the fan cooling coils is supplied by the non-safety-related non-essential service water (NESW) system. The fans are not required to operate following a LOCA, MSLB, or FWLB. The containment isolation valves for the NESW system automatically isolate on a containment hi-hi pressure isolation signal. However, the isolation valves would not close for a small break that did not generate a hi-hi pressure isolation signal, and cooling water would continue to flow through the cooling coils.

The NESW piping has an indirect safety function: its failure must not adversely impact safety-related equipment. Because of this, two-phase flow and waterhammer were evaluated for their potential to cause piping failure.

An evaluation, which included the development of hydraulic models, heat transfer calculations, and finite element stress analysis, concluded that there was no potential for the occurrence of two-phase flow in the lower containment ventilation units.

The operation of the upper containment cooling units, which computer models predict to experience two-phase flow during normal operation, would not be significantly impacted. With the exception of a small break that does not generate a hi-hi pressure isolation signal, the NESW to and from the cooling units is isolated. For the small break that does not generate an isolation signal, the steam from the break is introduced into the lower compartment and passes through the ice condenser where it would be condensed. Thus, it would not be a contributor to the upper unit's heat load, and operation under this accident condition would not differ from normal operation.

During the review, a potential for a waterhammer to occur in the NESW piping was identified and investigated. The NESW is an open loop system that supplies water to several components, including the upper containment air coolers. The water to the coolers is supplied from Lake Michigan, and it is returned to the lake after passing through the air coolers. These coolers are located more than 32 feet (the height at which a water column can be supported by atmosphere pressure) above the lake water level, and any water contained in piping above the lake elevation would drain if the NESW pumps were stopped. If a loss of offsite power to both units were to occur, all NESW pumps would lose power, coast down, and be loaded onto the diesel generators approximately 25 seconds later. The subsequent draining of the elevated piping would create a void, and when flow was reestablished, a potential for a waterhammer event would be created.

The piping system was analyzed for this postulated waterhammer condition. The pressure pulses from a waterhammer are calculated to be approximately 150 psi. The stress analysis determined that the support loads were small and the piping stresses (for the applicable loads, including waterhammer) were considerably less than the yield strength of the piping material.

Requested Action Item 3

Determine if piping systems that penetrate the containment are susceptible to thermal expansion of fluid so that overpressurization of piping could occur.

Response to Action Item 3

A review of lines penetrating the Unit 1 containment has been performed, and the lines that are potentially isolated following design basis accidents have been identified. A listing of the lines penetrating containment is given in Table 1. These lines can be divided into six groups: those that have inherent pressure protection; a line whose normal operating temperature exceeds the predicted accident temperature; those having previously installed relief valves; those requiring modification; those that have been analyzed using ASME Section III, Appendix F criteria; and one line that requires a procedure change to ensure that water is not trapped between isolation valves. A description of these line groupings follows.

Lines Having Inherent Pressure Protection (Category A)

The following types of lines are considered to have inherent overpressurization protection:

- Gas filled lines.
- Instrument lines that are isolated by hydraulic isolators designed to displace increasing fluid volume during high temperature LOCA and MSLB conditions.
- Lines that are steam filled under normal operating conditions.
- Lines that service safety related equipment required to mitigate a design basis accident and remain open during an accident.
- Lines that have a configuration that precludes overpressurization.

Line Whose Normal Operating Temperature Exceeds Accident Temperatures (Category B)

The chemical and volume control system (CVCS) letdown line is in continuous service and has a nominal temperature of 290°F at the containment penetration. The line is insulated to prevent injury to personnel, and its containment isolation valves are located in the annular area of the lower containment. Except for a 100-second interval at the beginning of a postulated steam line break, the nominal operating temperature exceeds the predicted lower compartment temperature.

During the 100-second interval, the heat transfer mechanism would be condensation on the relatively cold insulation surface. This would occur at the containment saturation temperature, approximately 240-250°F at the containment design pressure of 12 psig. Thus, following isolation, the water in this CVCS line would be cooled, and overpressurization would not occur.

Lines Having Previously Installed Relief Valves (Category C)

The following lines presently have previously installed relief valves and are, therefore, not subject to overpressurization:

- Component cooling water (CCW) lines to and from the containment recirculation (CEQ) fans.
- CCW lines to and from the main steam penetrations.
- CCW lines to and from the excess letdown heat exchanger.
- CCW lines to and from the reactor support coolers.

- Reactor coolant system (RCS) hot leg line to residual heat removal (RHR) pumps (normal cooldown).

- CCW lines to and from the reactor coolant pump (RCP) motor and thermal barrier.

Lines Requiring Modification (Category D)

The following lines have segments between valves that are subject to pressurization under accident conditions. A design change has been implemented to install a bypass check valve parallel to an existing valve to provide a flow path back to the sample system.

- Sample line from the RCS hot legs.

- Sample line from the pressurizer liquid space.

- Sample line from the accumulators.

Lines Analyzed to ASME Section III, Appendix F Criteria (Category E1 and E2)

The lines that are described below have no relief valves and have been analyzed in accordance with ASME Section III, Appendix F criteria for inelastic analysis.

Two methods were used to estimate the peak pressure inside the affected piping. In the first method (Category E1), the temperature increase for the water inside the pipe and the associated pressure were determined. The second method calculates the pressure at which certain diaphragm valves in a system would lift off of their seats, providing a momentary relief path (Category E2). The pressure determined by either of these methods is used as input to the stress analyses.

The pressures inside the RCP seal leak-off line, the RCP seal bypass line, and the accumulator fill line were determined using the first method, i.e., by calculating the increase in water temperature. The calculations consider forced convection or condensation on the pipe surface (this is dependent on the pipe location relative to the break), conduction through the pipe wall, and natural convection heat transfer from the inside of the pipe to the water.

The second method, which takes credit for the momentary lifting of diaphragm valves, was used for eighteen piping segments. These piping segments are located in the NESW lines supplying the air coolers and the RCP motor coolers, the reactor coolant drain tank (RCDT) pump suction line, the containment sump discharge line, the primary water line to the RCPs and pressurizer relief tank (PRT), and the demineralized water supply to the refueling cavity scrub down hose connection. The pressure required to momentarily open the diaphragm valves in these segments has been determined to be as follows:

System	Valve Size	Pressure, psig
NESW	2-inch	325
NESW	3-inch	711
NESW	6-inch	215
Primary water supply to RCPs and PRT	3-inch	212
Demineralized water supply to refueling cavity scrub down hose connection	2-inch	325
Reactor coolant drain tank pump suction	4-inch	262
Containment sump pump discharge to waste disposal	3-inch	212

The drawings of the diaphragm relief valves that lift to provide a relief path are included in Attachment 2.

The results of the stress analyses, which use the peak pressures as input, show that the stresses in these segments are within ASME Section III, Appendix F limits.

The following is a description of the lines that were analyzed utilizing Appendix F criteria:

Containment Penetration (CPN)-32: Accumulator Fill Lines
See Drawings OP-1-5143A-4, OP-1-5142-35
CPN-32 consists of piping from outside the containment isolation valves to the normally closed accumulator "inlet" valves and the normally closed valves in the flow paths to the low head safety injection hot leg loops.

CPN-33: Primary Water to the RCPs and PRT
See Drawing OP-1-5128A-42
CPN-33 consists of piping between the primary water supply line isolation valve outside containment to the RCP and PRT isolation valves inside containment.

CPN-36: Demineralized Water Supply to the Refueling Cavity Scrub Down Hose Connections
See Drawing OP-12-5115D-22
CPN-36 consists of piping between the demineralized water supply line isolation valves outside containment to manual isolation valves for hose connections inside containment.

CPN-37: RCP Seal Leak-Off Return Line
See Drawing OP-1-5129A-28
CPN-37 consists of the RCP seal water return piping between containment isolation valves, including test connections.

CPN-40: PRT and RCDT Drain Piping
See Drawing OP-12-5137A-19
CPN-40 consists of piping from the normally closed PRT drain line and the RCDT drain line check valve to the normally closed isolation valves outside containment.

CPN-41: Containment Sump Pump Discharge
See Drawing OP-1-5124-22
CPN-41 consists of piping between the sump pump discharge check valves inside containment and the discharge isolation valves outside containment.

RCP Seal Bypass Line
See Drawing OP-1-5128A-42
The isolated segment of the RCP seal bypass line consists of piping from the seal bypass line check valves to the normally closed valve in the common discharge header.

MULTIPLE CPNs: NESW Supply and Return to Air Coolers
See Drawing OP-1-5114A-24
These CPNs consist of piping between the NESW supply and return lines that are located outside of containment.

The following drawings contain restrictions on their use:

OP-1-5114A-24
OP-12-5115D-22
OP-1-5124-22
OP-1-5128A-42
OP-1-5129A-28
OP-12-5137A-19
OP-1-5142-35
OP-1-5143A-4

In accordance with the restrictions stated on the drawings, I&M hereby releases these documents to the NRC for its information and use in connection with the review of our submittal. I&M also permits the NRC to reproduce the drawings as necessary to facilitate review and distribution of the submittal to meet NRC requirements.

The use of Appendix F is an interim measure that is consistent with the guidance in GL 96-06, Supplement 1. Prior to the next scheduled Unit 1 refueling outage, I&M will resolve the interim use of ASME Section III, Appendix F.

Line Requiring Procedure Change (Category F)

The potential exists for over pressurization of the refueling cavity drain line following the draining of the refueling cavity. This could happen if the refueling water were not adequately drained prior to closing the manual isolation valves. During system heatup, the water in the isolated section would expand, and pressurize the piping section. The final pressure would depend on the amount of trapped water. The applicable Unit 1 procedure has been modified to ensure that the refueling cavity drain line is empty prior to isolation, eliminating the potential for overpressurization. I&M will maintain the requirement to ensure that the refueling cavity drain line is empty prior to its being isolated.

Table 1

LISTING OF CONTAINMENT PENETRATIONS

DESCRIPTION	PENETRATION NUMBER	CATEGORY
Fuel Transfer Tube	1	A
Steam generator main steam outlets	2	A
Steam generator main steam outlets	3	A
Steam generator main steam outlets	4	A
Steam generator main steam outlets	5	A
Steam generator blowdown line	6	A
Steam generator feedwater supply lines	7	A
Steam generator feedwater supply lines	8	A
Steam generator feedwater supply lines	9	A
Steam generator feedwater supply lines	10	A
RCP seal water supply	11	A
RCP seal water supply	12	A
RCP seal water supply	13	A
RCP seal water supply	14	A
Relief vent header	15	A
RHR to reactor coolant cold legs	16	A
NESW to lower containment ventilation unit	17	E2
NESW to lower containment ventilation unit	18	E2
NESW to lower containment ventilation unit	19	E2
NESW to lower containment ventilation unit	20	E2
NESW from lower containment ventilation unit	21	E2
NESW from lower containment ventilation unit	22	E2
NESW from lower containment ventilation unit	23	E2
NESW from lower containment ventilation unit	24	E2
CCW to the CEQ fans	25	C
CCW from the CEQ fans	25	C
CCW to the main steam penetrations	25	C
CCW from the main steam penetrations	25	C
NESW from upper containment ventilation units	26	E2
NESW to upper containment ventilation units	26	E2
NESW to the RCP motor air coolers	26	E2
NESW from the RCP motor air coolers	26	E2
NESW from upper containment ventilation units	27	E2
NESW to upper containment ventilation units	27	E2
NESW to the RCP motor air coolers	27	E2
NESW from the RCP motor air coolers	27	E2
Spare penetration	28	A

Table 1

LISTING OF CONTAINMENT PENETRATIONS, CONTINUED

Description	Penetration Number	Category
Control air	29	A
Plant air	29	A
Spare penetration	30	A
Dead weight test connection	30	A
Nitrogen supply to reactor coolant drain tank	31	A
Reactor coolant drain tank and pressurizer relief tank vents	31	A
Containment air particulate and gas detector sample line	31	A
Ice condenser and containment ventilation unit drain to drain header	31	A
Nitrogen to accumulators	32	A
Post accident sampling system supply (gas)	32	A
Accumulator test line from safety injection (SI) pump	32	E1
Spare penetration	33	A
Primary water supply to the pressurizer relief tank	33	E2
Letdown line – CVCS	34	B
Charging line – CVCS	35	A
Refueling water supply	36	A
Demineralized water supply	36	E2
RCP seal leakoff return line	37	E1
RCP motor and thermal barrier cooling water supply	38	C
RCP motor cooling water discharge	39	C
Reactor coolant drain tank pump suction	40	E2
Containment sump pump discharge to waste disposal	41	E2
Refueling cavity drain to purification system	42	F
SI	43	A
Boron injection inlet	44	A
RHR suction from sump	45	A
RHR suction from sump	46	A
RCS hot leg to RHR pumps (normal cooldown)	47	C
RHR to reactor coolant hot legs-low head SI	48	A
RHR to reactor coolant hot legs-low head SI	49	A
RHR to containment spray	50	A
RHR to containment spray	51	A
Upper containment spray inlet	52	A
Upper containment spray inlet	53	A
Lower containment spray inlet	54	A

Table 1

LISTING OF CONTAINMENT PENETRATIONS, CONTINUED

Description	Penetration Number	Category
Lower containment spray inlet	55	A
Glycol from ice condenser fan coolers	56	A
Ice loading line	57	A
RCP thermal barrier cooling water discharge	58	C
Purge air inlet (containment)	59	A
Purge air outlet (containment)	60	A
Purge air inlet (instrument room)	61	A
Purge air outlet (instrument room)	62	A
Purge air outlet (containment)	63	A
Purge air inlet	64	A
Containment pressure relief line	65	A
Steam generator #2 blowdown sample	66	A
Steam generator #1 steam space sample	66	A
Sample line from hot legs	66	D
Sample line from pressurizer liquid space	66	D
Sample line from pressurizer steam space	66	A
Spare penetration	67	A
Post accident sampling system supply	67	A
Post accident sampling system return	67	A
SI	68	A
Spare penetration	69	A
Containment air particulate and gas detector sample return	70	A
Spare penetrations (5 lines)	70	A
Containment service	71	A
CCW to the CEQ fans	72	C
CCW from the CEQ fans	72	C
CCW to the main steam penetrations	72	C
CCW from the main steam penetrations	72	C
NESW to the instrument room ventilation units	73	E2
NESW from the instrument room ventilation units	73	E2
Instrument air	74	A
Nitrogen supply to pressurizer relief tank	74	A
CCW to the excess letdown heat exchanger	75	C
CCW from the excess letdown heat exchanger	75	C
Containment thimble removal	76	A
Steam generator blowdown line	77	A
Steam generator blowdown lines	78	A

Table 1

LISTING OF CONTAINMENT PENETRATIONS, CONTINUED

Description	Penetration Number	Category
Steam generator blowdown lines	79	A
Ice loading return	80	A
Gas analyzer from pressurizer relief tank	81	A
Gas analyzer from reactor coolant drain tank	81	A
Sample line from accumulators	81	D
CCW to the reactor support coolers	82	C
CCW from the reactor support coolers	82	C
Containment weld channel pressurization air supply – Spare penetrations (2 lines)	83	A
NESW from upper containment ventilation units	84	E2
NESW to upper containment ventilation units	84	E2
NESW to the RCP motor air coolers	84	E2
NESW from the RCP motor air coolers	84	E2
NESW from upper containment ventilation units	85	E2
NESW to upper containment ventilation units	85	E2
NESW to the RCP motor air coolers	85	E2
NESW from the RCP motor air coolers	85	E2
Glycol to ice condenser fan coolers	86	A
Spare penetration	87	A
Spare penetration	88	A
Upper containment radiation sampling system	89	A
Spare penetration	90	A
Spare penetrations (2 lines)	91	A
Reactor vessel level instrument system	91	A
Containment pressure transmitters	91	A
Instrument room radiation sampling room	92	A
Containment pressure transmitters	92	A
Sample lines to hydrogen monitoring system (5 lines)	93	A
Reactor vessel level instrument system	94	A
Containment pressure transmitters	94	A
Sample lines to and from hydrogen monitoring system	95	A
Containment pressure transmitters	96	A
Reactor vessel level instrument system	97	A
Containment pressure transmitters	97	A
Reactor vessel level instrument system	98	A
Containment pressure transmitters	98	A
RCP discharge seal system bypass	N/A	E1

ATTACHMENT 2 TO C1100-01

FLOW DIAGRAMS

DWG. NO. OP-1-5143A

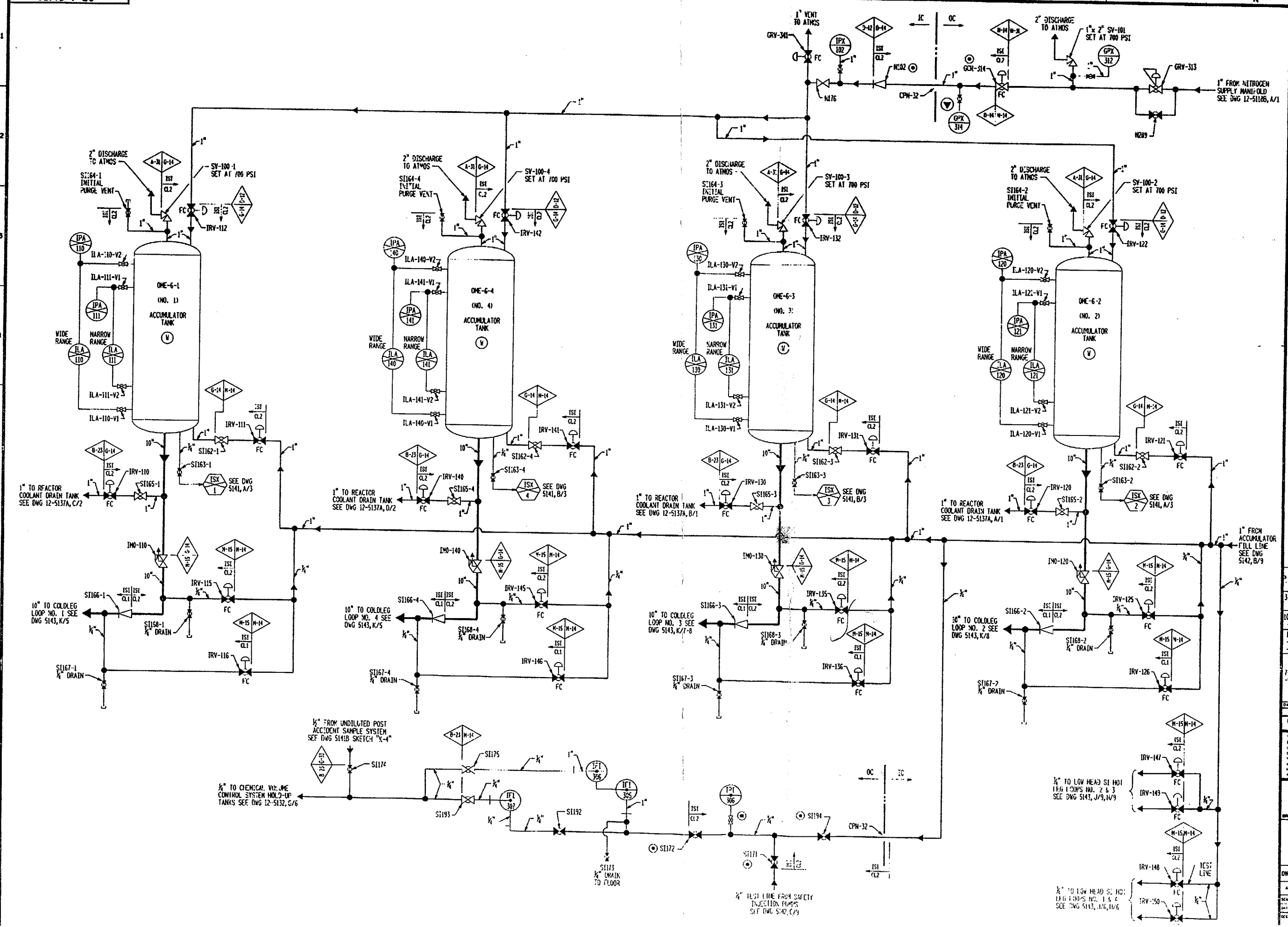

GENERAL NOTES

- UNLESS OTHERWISE NOTED ON THIS DRAWING:
- REFER TO DRAWING 12-5104 FOR "-HAND OPERATED VALVE IDENTIFICATION NUMBERS" NOTES.
- THE UNIT PREFIX DESIGNATION FOR EACH COMPONENT IDENTIFICATION NO. IS " 1 ".

LEGEND

MAIN FLOW

AUXILIARY FLOW

FOR VALVE, INSTRUMENT, SAMPLING PIPE MATERIAL AND OTHER SYMBOLS NOT EXPLAINED ON THIS DWG AND FOR MARK NUMBER CODES SEE DWGS 12-5103 & 5104.

ALL EQUIPMENT SEISMIC CLASS I, EXCEPT AS NOTED.

(W) BY WESTINGHOUSE

ALL EQUIPMENT, VALVES & INSTRUMENTS SUPPLIED BY (W) EXCEPT AS NOTED.

NOTE "A"
FOR CODE CLASS 1, 2 & 3 INSTRUMENT CONNECTIONS, THE ISI BOUNDARY EXTENDS TO AND INCLUDES THE FIRST ROOT VALVE.

NOTE "B"
FOR CODE CLASS 1 VENTS AND DRAINS, THE ISI BOUNDARY EXTENDS TO AND INCLUDES THE SECOND NORMALLY CLOSED VALVE OR EXTENDS TO AND INCLUDES THE BLIND FLANGE OR CAP AFTER A NORMALLY CLOSED VALVE.

NOTE "C"
FOR CODE CLASS 2 & 3 VENTS AND DRAINS THE ISI BOUNDARY EXTENDS TO AND INCLUDES THE FIRST NORMALLY CLOSED VALVE.

DATE	NO.	DESCRIPTION	APPRO.
3-25-99	4	ISSUED FOR RECORD. THIS IS TO DOCUMENT REVISION 2 OF THIS DWG PER DCN-00-0159 & C/R 98-06345. GM/DMM	
3-18-99	3	ADDED: ISI CL2 AT W/G, J/6, F/6, C/R PER C/R 99-3239 A/B 401873. DLS/CC	LB
10-28-98	2	ADDED: TEST SYMBOL TO CONNECTION AT K/2 PER C/R 98-6345 A/B 023282. DLS/C.C.	LB
10-30-97	1	ADDED: ISI CL2 AT G/9 PER MAC 97-1030A A/B 020301. DLS/C.C.	LB FOR JCJ
7-29-97	0	THIS DRAWING HAS BEEN CREATED FROM A PORTION OF DWG 1-5143-43. REVISED: VALVE GPX-314-V1 FROM OPEN TO CLOSED AT K/1. DELETED: REF LC FROM VALVE SI172 AT G/9 PER ADM 97-0784, A/B 020248. GM/C.C.	LB FOR JCJ

REVISIONS

FILENAME: op-1-5143a.004

"THIS DRAWING IS THE PROPERTY OF THE AMERICAN ELECTRIC POWER SERVICE CORP. AND IS LOANED UPON CONDITION THAT IT IS NOT TO BE REPRODUCED OR COPIED, IN WHOLE OR IN PART, OR USED FOR FURNISHING INFORMATION TO ANY PERSON WITHOUT THE WRITTEN CONSENT OF THE AEP SERVICE CORP., OR FOR ANY PURPOSE DETRIMENTAL TO THEIR INTEREST, AND IS TO BE RETURNED UPON REQUEST"

INDIANA MICHIGAN POWER COMPANY

DONALD C. COOK
NUCLEAR PLANT

BRIDGMAN MICHIGAN

FLOW DIAGRAM
EMERG. CORE COOLING (RHR)
ACCUMULATOR PIPING
UNIT NO. 1

DWG. NO. OP-1-5143A-4

ARCH	ELEC	MECH	STR

SCALE: DR:
DATE: CH:
DESIGN ENGINEERING DIVISION

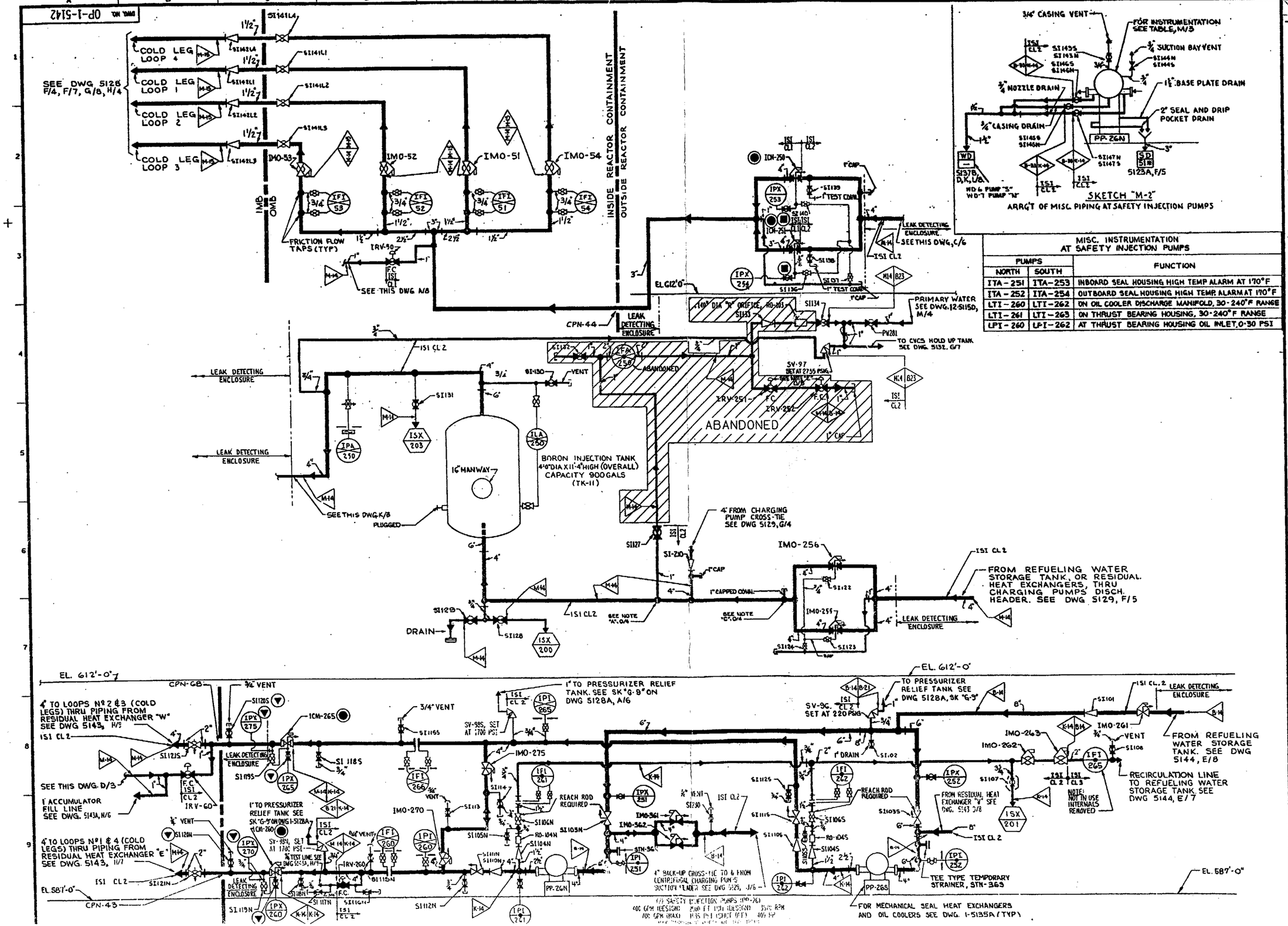

GENERAL NOTES

- UNLESS OTHERWISE NOTED ON THIS DRAWING:
- REFER TO DRAWING 12-5104 FOR "HAND OPERATED VALVE IDENTIFICATION NUMBERS" NO166.
- THE UNIT PREFIX DESIGNATION FOR EACH COMPONENT IDENTIFICATION NO. IS " 1 ".

LEGEND

MAIN FLOW
AUXILIARY FLOW

FOR VALVE, INSTRUMENT, SAMPLING, PIPE MATERIAL AND OTHER SYMBOLS NOT EXPLAINED ON THIS DWG AND FOR MARK NUMBER CODES: SEE DWGS 12-5103, 12-5104

NOTE "A"
ALL EQUIPMENT, VALVES AND INSTRUMENTS SUPPLIED BY WESTINGHOUSE EXCEPT AS NOTED.

NOTE "B"
ALL EQUIPMENT SEISMIC CLASS I EXCEPT AS NOTED.

NOTE "C"
FOR CODE CLASS 2 INSTRUMENT CONNECTIONS THE ISI BOUNDARY EXTENDS TO AND INCLUDES THE FIRST ROOT VALVE.

NOTE "D"
FOR CODE CLASS 2 VENTS AND DRAINS THE ISI BOUNDARY EXTENDS TO AND INCLUDES THE FIRST NORMALLY CLOSED VALVE.

NOTE "E"
VALVES IRV-251 & 252 ARE NON-FUNCTIONAL

NOTE "G"
SAFETY INJECTION PUMP LUBRICATION OIL SYSTEM IS ISI CLASS 3 AND PIPE SPEC. A-12.

MISC. INSTRUMENTATION AT SAFETY INJECTION PUMPS

PUMPS		FUNCTION
NORTH	SOUTH	
ITA-251	ITA-253	INBOARD SEAL HOUSING HIGH TEMP ALARM AT 170°F
ITA-252	ITA-254	OUTBOARD SEAL HOUSING HIGH TEMP ALARM AT 170°F
LTI-260	LTI-262	ON OIL COOLER DISCHARGE MANIFOLD, 30-240°F RANGE
LTI-261	LTI-263	ON THRUST BEARING HOUSING, 30-240°F RANGE
LPI-260	LPI-262	AT THRUST BEARING HOUSING OIL INLET, 0-30 PSI

DATE	NO.	DESCRIPTION	APPD.
1/19/00	35	THIS DRAWING SUPERSEDES 1-5142 REV. 33. REVISED VALVE SI147 TO SHOW CLOSED AT 2/3 GRAPTING EWCAI #98 DCR 99-0098	
5-5-99	34	DELETED: ELECTRIC STRIP HEATERS ON TA-11 AT E-F/5-6, L.O. AT PUMP LOCATIONS PER C/R 99-4061 A/B 023436.	LB
3-19-99	33	DELETED: ISI CL2 BOUNDRY AT 0/3 PER C/R 99-4118 A/B 022819.	LB
1-19-99	32	REVISED: FROM H.C. CONN. TO CAP AT F/4 PER C/R 98-6413 A/B 021387.	LB

REVISIONS

FILENAME: OP-1-5142.035
(raster file): OP-1-5142 35.cit

"THIS DRAWING IS THE PROPERTY OF THE AMERICAN ELECTRIC POWER SERVICE CORP. AND IS LOANED UPON CONDITION THAT IT IS NOT TO BE REPRODUCED OR COPIED, IN WHOLE OR IN PART, OR USED FOR FURNISHING INFORMATION TO ANY PERSON WITHOUT THE WRITTEN CONSENT OF THE AEP SERVICE CORP., OR FOR ANY PURPOSE DETRIMENTAL TO THEIR INTEREST, AND IS TO BE RETURNED UPON REQUEST"

INDIANA MICHIGAN POWER COMPANY
DONALD C. COOK
NUCLEAR PLANT
BRIDGMAN MICHIGAN

FLOW DIAGRAM
EMERGENCY CORE
COOLING (SIS)

DWG. NO. OP-1-5142-35

ARCH	ELEC	MECH	STR

SCALE: DRN
DATE: CHK

DESIGN ENGINEERING DIVISION
REFER TO USED BY TABLE
WORK FLOW FOR SIGNATURES

AMERICAN AEP SERVICE CORP.

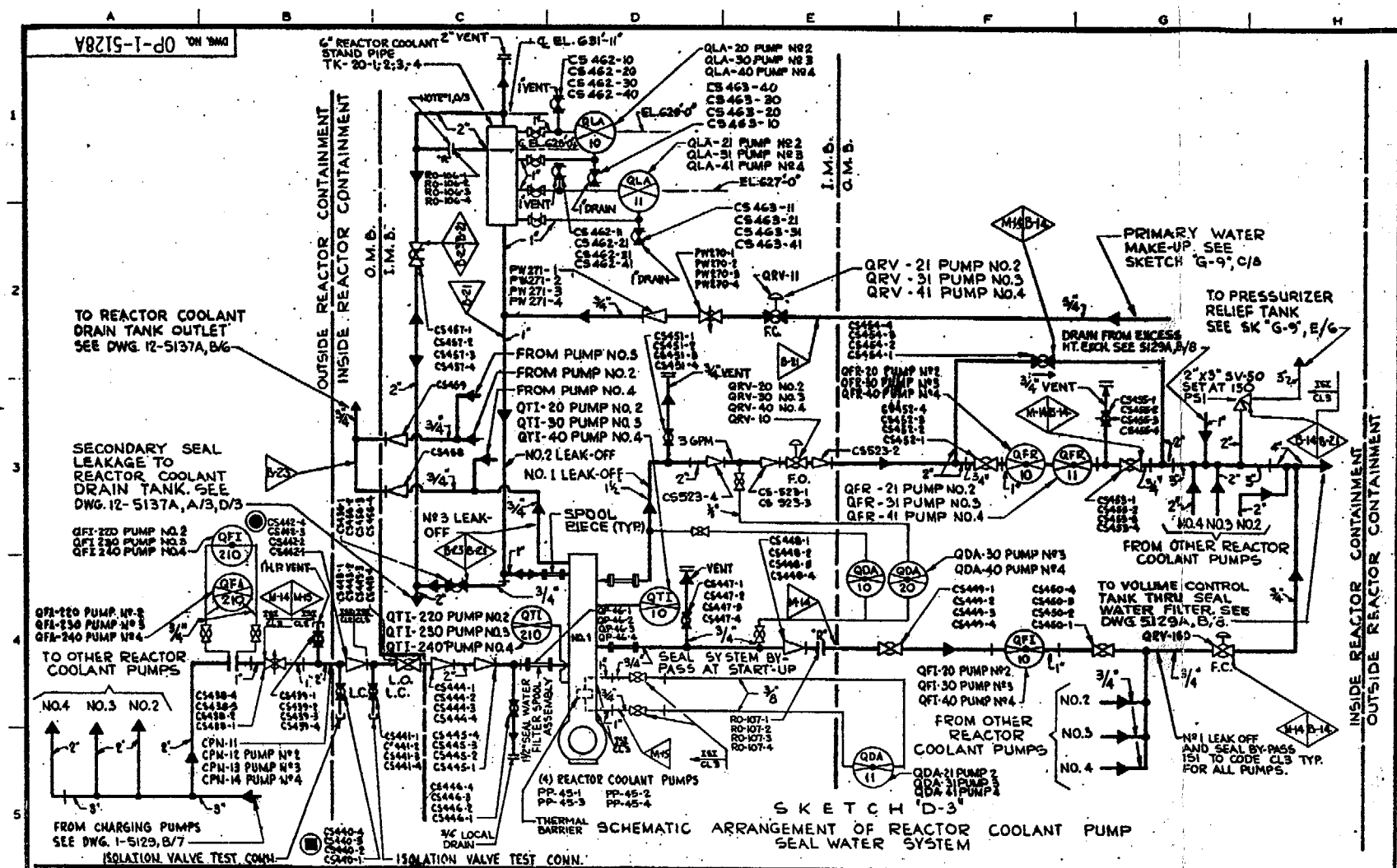

SKETCH "D-3"
SCHEMATIC ARRANGEMENT OF REACTOR COOLANT PUMP SEAL WATER SYSTEM

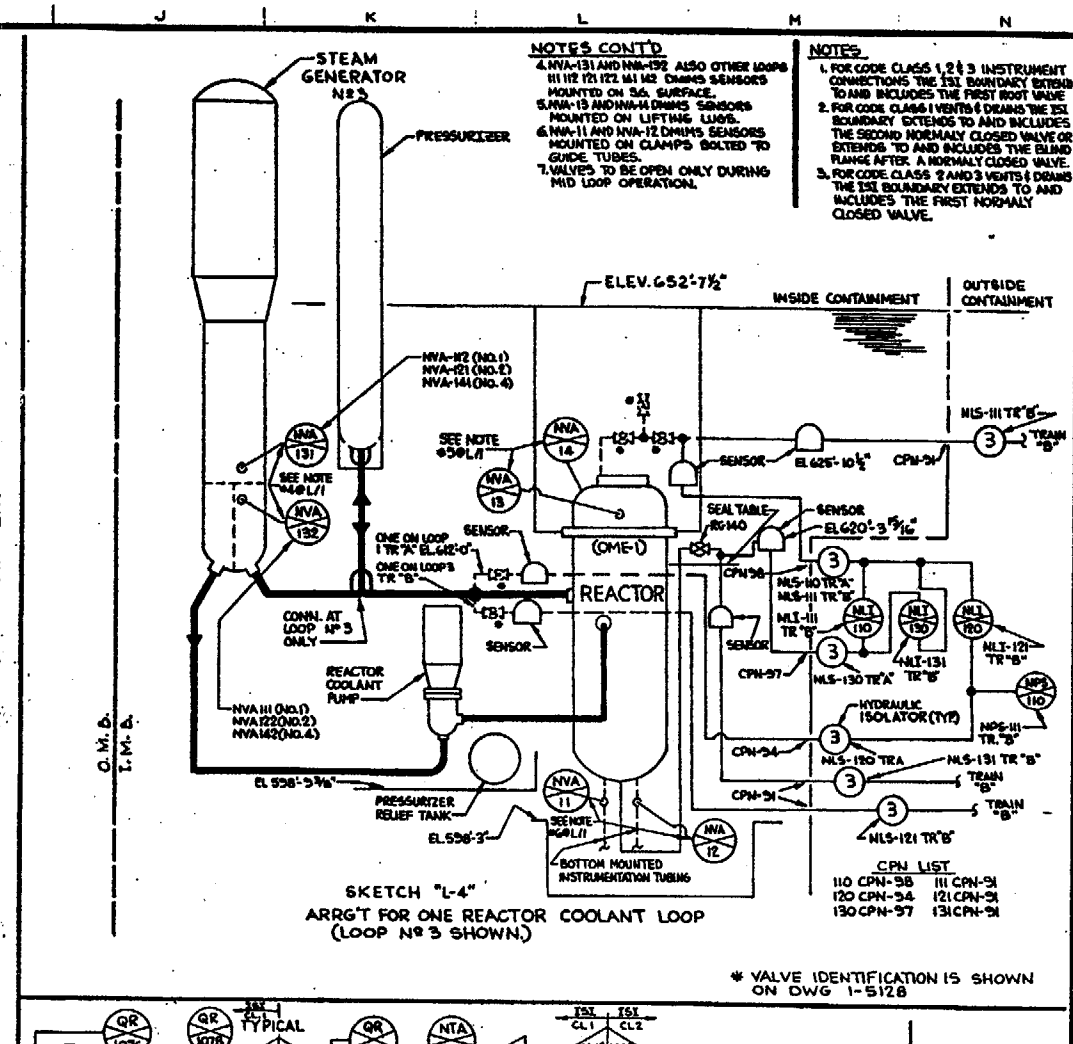

SKETCH "L-4"
ARRG'T FOR ONE REACTOR COOLANT LOOP (LOOP Nº 3 SHOWN)

* VALVE IDENTIFICATION IS SHOWN ON DWG 1-5128

NOTES CONT'D

4. NVA-131 AND NVA-132 ALSO OTHER LOOPS H1 H12 T21 T22 M1 M2 DNHMS SENSORS MOUNTED ON S.G. SURFACE.
5. NVA-13 AND NVA-14 DNHMS SENSORS MOUNTED ON LIFTING LUGS.
6. NVA-11 AND NVA-12 DNHMS SENSORS MOUNTED ON CLAMPS BOLTED TO GUIDE TUBES.
7. VALVES TO BE OPEN ONLY DURING MID LOOP OPERATION.

NOTES

1. FOR CODE CLASS 1, 2 & 3 INSTRUMENT CONNECTIONS THE ISI BOUNDARY EXTENDS TO AND INCLUDES THE FIRST ROOT VALVE
2. FOR CODE CLASS 1 VENTS & DRAINS THE ISI BOUNDARY EXTENDS TO AND INCLUDES THE SECOND NORMALLY CLOSED VALVE OR EXTENDS TO AND INCLUDES THE BLIND FLANGE AFTER A NORMALLY CLOSED VALVE.
3. FOR CODE CLASS 2 AND 3 VENTS & DRAINS THE ISI BOUNDARY EXTENDS TO AND INCLUDES THE FIRST NORMALLY CLOSED VALVE.

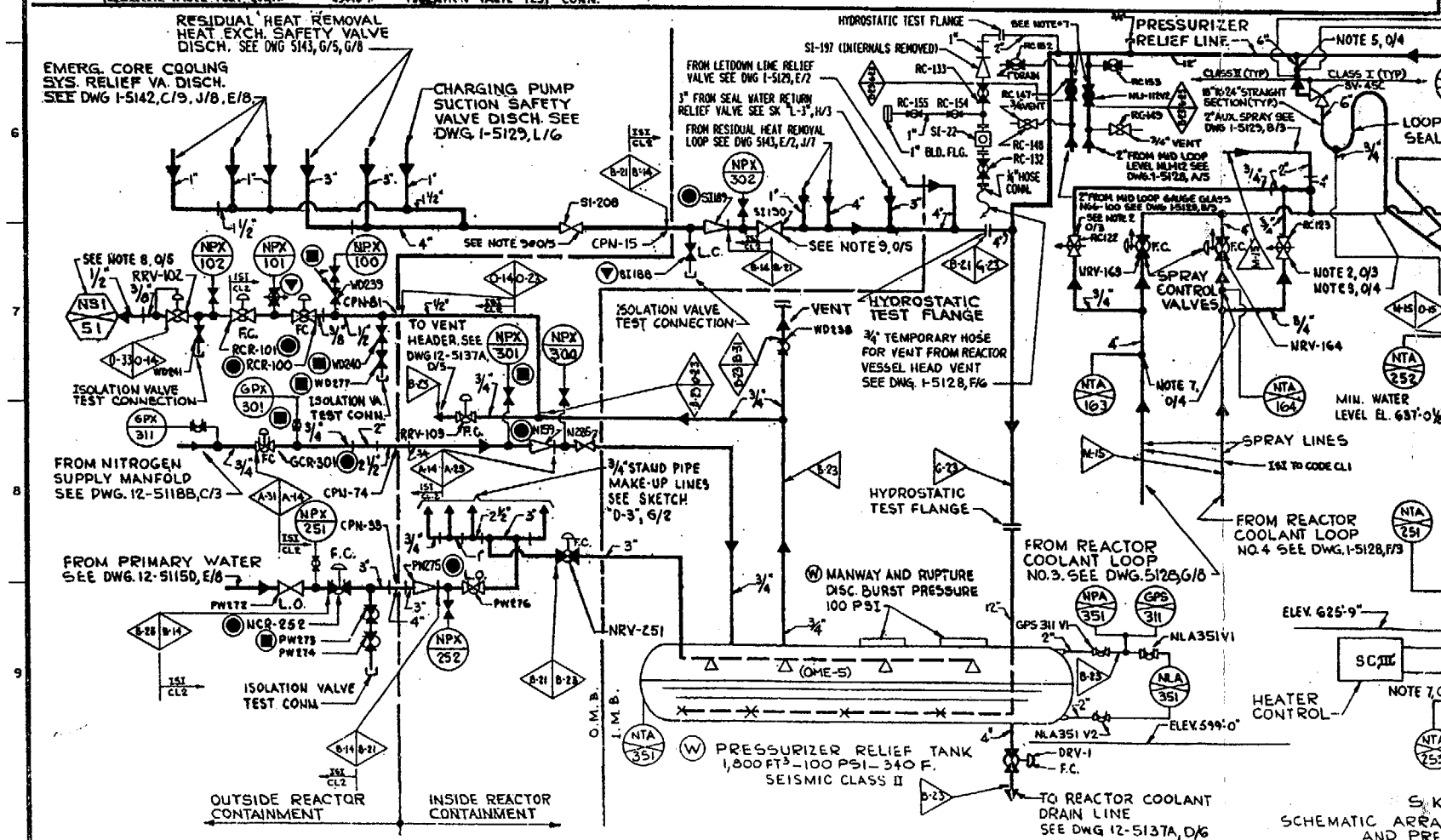

SKETCH "G-9"
SCHEMATIC ARRANGEMENT OF PIPING AT PRESSURIZER AND PRESSURIZER RELIEF TANK

-- CAUTION --
THE SET POINTS INDICATED ARE PROVIDED ONLY TO ASSIST IN UNDERSTANDING THE DRAWINGS. REFER TO APPROPRIATE SET POINT CONTROL DOCUMENTS FOR ACTUAL DEVICE SET POINTS. SAFETY VALVE SETTINGS ARE AS INDICATED ON DRAWING AND ARE NOT INCLUDED IN THE SCOPE OF THE CAUTION STATEMENT.

GENERAL NOTES

- UNLESS OTHERWISE NOTED ON THIS DRAWING:
- REFER TO DRAWING 12-5104 FOR "HAND OPERATED VALVE IDENTIFICATION NUMBERS" NOTES.
- THE UNIT PREFIX DESIGNATION FOR EACH COMPONENT IDENTIFICATION NO. IS " 1 ".

LEGEND

- REACTOR COOLANT PIPING BY (W)
- AUX. PIPING
- INSTR. PIPING
- (W) BY WESTINGHOUSE

ALL VALVES AND INSTRUMENTATION BY (W)

FOR VALVE, INSTRUMENT, SAMPLING, PIPE MATERIAL AND OTHER SYMBOLS NOT EXPLAINED ON THIS DWG., AND FOR MARK NUMBER CODES, SEE DWGS. 12-5103, 5104

NOTE:
PIPING DESIGN TO FOLLOW CRITERIA INDICATED IN (W) AEW-1212 & AEW-316.

SEISMIC CLASS I EXCEPT AS INDICATED.

NOTE 1, C/1
ORIFICE IS A MIN. OF 7 FT. ABOVE THE CONN. TO THE REACTOR COOLANT PUMP.

NOTE 2, F/7, H/7
VALVE TO HAVE EXTENSION STEM. TO BE OPERATED OUTSIDE OF PRESSURIZER ENCLOSURE AT EL. 612'-0".

NOTE 3, H/7
SLOPE SPRAY PIPE DOWNWARD TO PROVIDE WATER SEAL BETWEEN PRESSURIZER AND SPRAY VALVES.

NOTE 5, K/6, J/6, K/6
PLACE DETECTORS AT BOTTOM OF PIPE.

NOTE 6, K/6
SLOPE PIPE DOWNWARD TO PROVIDE WATER SEAL ON RELIEF VALVES.

NOTE 7, G/7, J/9
LOCATE APPROXIMATELY MIDWAY BETWEEN LOOP AND PRESSURIZER.

NOTE 8, A/7, J/7, J/9
FOR TRANSMITTED SAMPLE SEE DWG 5141.

NOTE 9, E/7
VALVE INTERNALS ARE TO BE REMOVED EXCEPT WHEN TESTING VALVE S1189.

DATE	NO.	DESCRIPTION	APPD.
12-31-99	47	ADDED: SPEC. BREAK G-23 AT L/6, 7. RELOCATED: SPEC. BREAK K-15/0-23 DOWNSTREAM OF VALVES NRV-151 NRV-152 & NRV-153 AT EL. 6/6, 7. PER DCR-99-0305, C/R 99-10537 CD/GNM	JMA
12-5-98	41	REVISED: PIPING MATERIAL SPEC. FROM "0-15" TO "0-25" AT A/7. PER DCR-98-0207, C/R 98-10521 CD/GNM	JNM
3-7-98	40	REVISED: CAUTION NOTE AT L-N/9 PER C/R 97-1539 A/B 621737AL DLS/CC	JCJ

REVISIONS

FILENAME: op-1-5128a.042
(roster file): op-1-5128a 042.cdl

"THIS DRAWING IS THE PROPERTY OF THE AMERICAN ELECTRIC POWER SERVICE CORP. AND IS LOANED UPON CONDITION THAT IT BE NOT TO BE REPRODUCED OR COPIED, IN WHOLE OR IN PART, OR USED FOR FURNISHING INFORMATION TO ANY PERSON WITHOUT THE WRITTEN CONSENT OF THE AEP SERVICE CORP., OR FOR ANY PURPOSE UNFORTUNATE TO THE INTERESTS, AND IS TO BE RETURNED UPON REQUEST"

INDIANA MICHIGAN POWER COMPANY
DONALD C. COOK
NUCLEAR PLANT
BRIDGMAN MICHIGAN

FLOW DIAGRAM
REACTOR COOLANT
UNIT NO. 1 SHEET 2 OF 2
EXCEPTIONS ARE NOTED

DWG. NO. OP-1-5128A-42

ARCH	ELEC	MECH	STR

SCALE: DRN:
DATE: CHK:

DESIGN ENGINEERING DIVISION
REFER TO ORIG. END. ISSUE MICROFILM FOR SIGNATURES

AMERICAN ELECTRIC POWER
AEP SERVICE CORP.
1 RIVERSIDE PLAZA
COLUMBUS, OH 43215

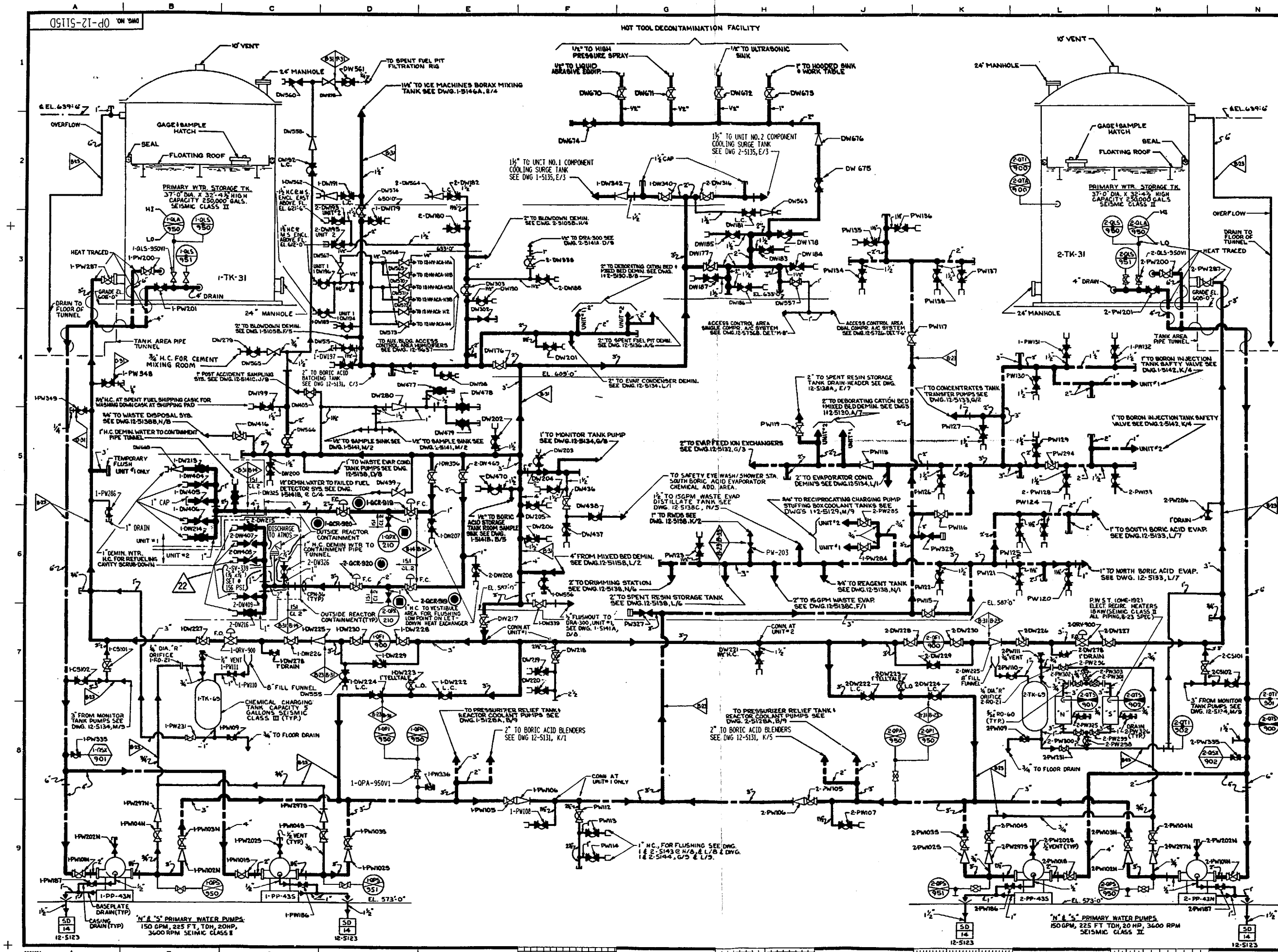

GENERAL NOTES

- UNLESS OTHERWISE NOTED ON THIS DRAWING:
- REFER TO DRAWING 12-5104 FOR "HAND OPERATED VALVE IDENTIFICATION NUMBERS" NOTES.
- THE UNIT PREFIX DESIGNATION FOR EACH COMPONENT IDENTIFICATION NO. IS " 12 ".

LEGEND

- MAKE-UP WATER
- PRIMARY WATER
- AUXILIARY PIPING

GENERAL NOTES

FOR VALVE, INSTRUMENT, SAMPLING PIPE MATERIAL, & OTHER SYMBOLS NOT EXPLAINED ON THIS DWG. AND FOR MARK NUMBER CODES SEE DWG. 12-5103 & 2-5104.

ALL EQUIPMENT IS SEISMIC CLASS III UNLESS OTHERWISE NOTED.

DATE	NO.	DESCRIPTION	APPD.
	22	INCORPORATED PER PARTIAL RELEASE OF 2-OCP-449 REV. 0. ISSUED FOR RECORD. GM/CC AT/JB KF/DD	GG
3-3-98	21	REVISED: CONTINUATION NOTE DWG & COORDINATES FROM 1-5135A, J/2 TO 1-5135, E/3 AT F/2; FROM 2-5135A, J/2 TO 2-5135, E/3 AT H/2 PER ADM 97-1000 A/B 020171AL. GM/CC	JCJ
8-1-97	20	ADDED: UNIQUE VA NO. 1-OPA-950V1. REVISED: VA NO. FR DW197 TO 1-DW197 AT D/4, 12-DW203 TO DW203 AT H/6 PER ADM 97-8725 A/B 020722. DLS/CC	LB for JCJ
4-2-97	19	REVISED: HOSE CONNECTION TO A 1" CAP AT B/5 PER JO-C34600-01, A/B 013566. GM/C.C.	JCJ
3-26-97	18	VOIDED: 11 + 17 REVISION RECORD SHT. FOR VALVE DATA SEE FDS. DELETED: HAND OPERATED VALVE IDENTIFICATION NUMBERS NOTE AT D/4-7. ADDED: NOTE AT D/1 REVISED: REF DWG COORDINATES FROM 3/1 TO C/1 AT D/4; FROM 1/8 TO K/1 AT F/8 AND FROM K/8 TO K/5 AT H/6 PER C/R 97-0297, A/B 019524. GM/CC	LB for JCJ

REVISIONS

FILENAME: op-12-5115d.022
(roster file): op-12-5115d 22.csh

"THIS DRAWING IS THE PROPERTY OF THE AMERICAN ELECTRIC POWER SERVICE CORP. AND IS LOANED UPON CONDITION THAT IT IS NOT TO BE REPRODUCED OR COPIED, IN WHOLE OR IN PART, OR USED FOR FURNISHING INFORMATION TO ANY PERSON WITHOUT THE WRITTEN CONSENT OF THE AEP SERVICE CORP., OR FOR ANY PURPOSE DETRIMENTAL TO THEIR INTEREST, AND IS TO BE RETURNED UPON REQUEST"

INDIANA MICHIGAN POWER COMPANY

DONALD C. COOK
NUCLEAR PLANT

BRIDGMAN MICHIGAN

FLOW DIAGRAM
PRIMARY WATER
SYSTEM
UNITS 1 & 2 SHT 5 OF 5

DWG. NO. OP-12-5115D-22

ARCH	ELEC	MECH	STR
SCALES		DRN	
DATED		CHK	

DESIGN CONSULTING DIVISION
REFER TO ORIG DWG ISSUE MICROFILM FOR SIGNATURES

AEP AMERICAN ELECTRIC POWER

AEP SERVICE CORP.
1 RIVERSIDE PLAZA
COLUMBUS, OH 43215

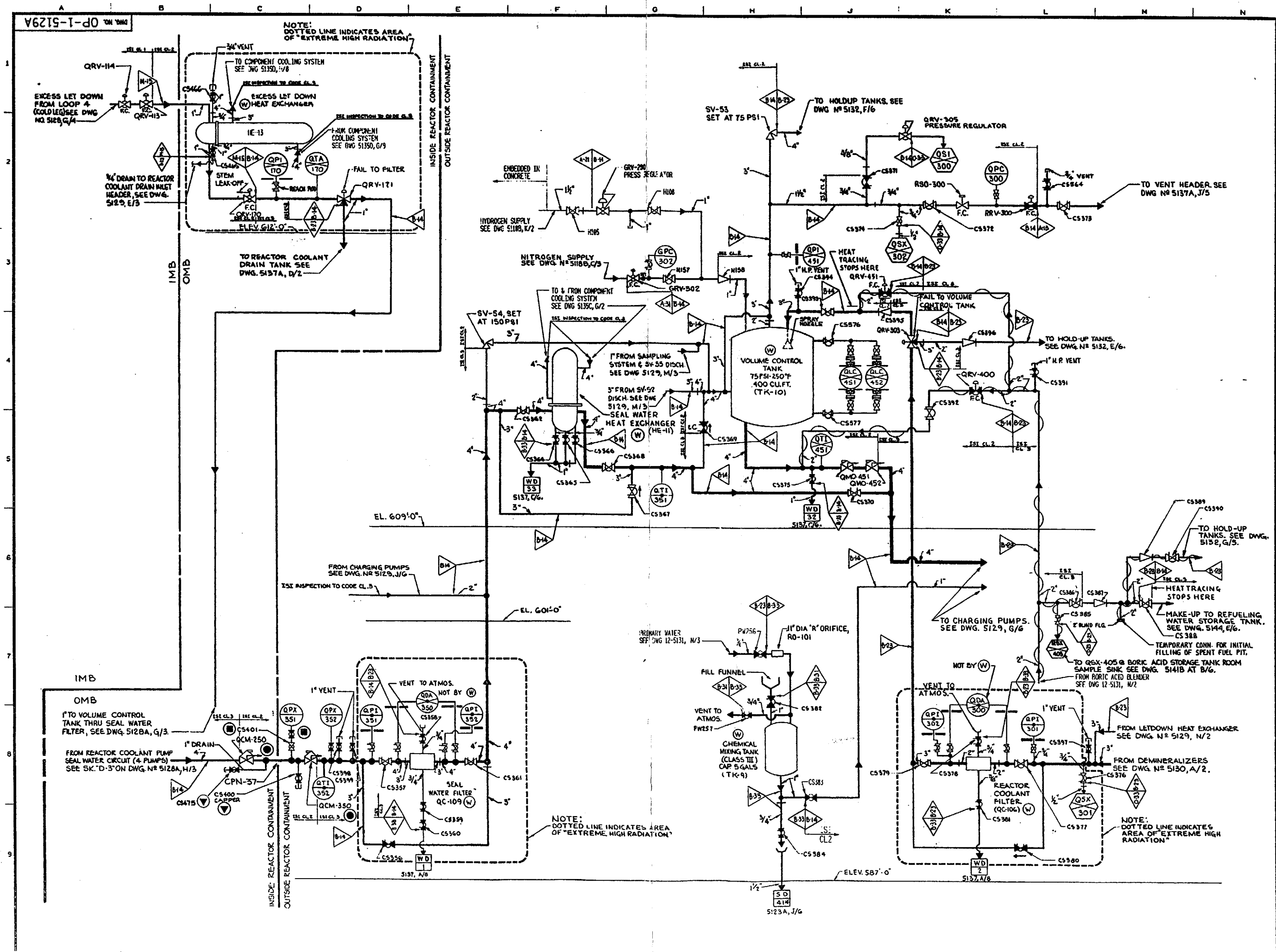

GENERAL NOTES

- UNLESS OTHERWISE NOTED ON THIS DRAWING:
- REFER TO DRAWING 12-5104 FOR "HAND OPERATED VALVE IDENTIFICATION NUMBERS" NOTES.
- THE UNIT PREFIX DESIGNATION FOR EACH COMPONENT IDENTIFICATION NO. IS " 1 ".

LEGEND:

MAIN PIPING

AUXILIARY PIPING

FOR VALVE, INSTRUMENT, SAMPLING, PIPE MATERIAL AND OTHER SYMBOLS NOT EXPLAINED ON THIS DWG AND FOR MARK NUMBER CODES SEE DWGS 12-5103, 5104.

SEISMIC CLASS I EXCEPT AS NOTED

(W) BY WESTINGHOUSE

ALL VALVES & INSTRUMENTATION SUPPLIED BY (W)

EQUIPMENT SUPPLIED BY (W) AS NOTED

NOTES:
1) FOR CODE CL 2 & 3 INSTRUMENT CONNS THE ISI BOUNDARY EXTENDS TO & INCLUDE THE FIRST ROOT VALVE.
2) FOR CODE CL 2 & 3 VENTS & DRAINS THE ISI BOUNDARY TO & INCLUDES THE FIRST NORMALLY CLOSED VALVE.

DATE	NO.	DESCRIPTION	BY
1/4/77	28	TIE-IN OF DRAWING SUPERSEDES I-5129A REV. 32 PER CCR 99-2549 CEJ/DDM.	
6-11-99	27	REVISED: S-9866. FOR CONTAINMENT ISOLATION TEST COND. FROM SQUARE TO TRIANGLE FOR VALVE SEATS AT C/6-9. DELETED: PREFIX "1-" CONT. DWG REF. AT W/7 & "REACH ROD" REQ'D AT VARIOUS LOCATIONS PER C/R 99-1125 A/B 823468. DLS/GR	LE
2-26-99	26	REVISED: VALVE PA256 FROM OPEN TO CLOSED AT W/7 PER C/R 99-9564 A/B 823524. DLS/C.C.	LE

REVISIONS

FILENAME: OP-1-5129A.028
(raster file): OP-1-5129A 28.dgn

"THIS DRAWING IS THE PROPERTY OF THE AMERICAN ELECTRIC POWER SERVICE CORP. AND IS LOANED UPON CONDITION THAT IT IS NOT TO BE REPRODUCED OR COPIED, IN WHOLE OR IN PART, OR USED FOR FURNISHING INFORMATION TO ANY PERSON WITHOUT THE WRITTEN CONSENT OF THE AEP SERVICE CORP., OR FOR ANY PURPOSE DETRIMENTAL TO THEIR INTEREST, AND IS TO BE RETURNED UPON REQUEST."

INDIANA MICHIGAN POWER COMPANY

DONALD C. COOK
NUCLEAR PLANT
BRIDGMAN MICHIG.

FLOW DIAGRAM CVCS-REACTOR LETDOWN & CHARGING

UNIT #1 SHEET 2 OF

DWG. NO. OP-1-5129A-28

ARCH	ELEC	MECH	STR

SCALE: DRN:
DATE: CHK:

DESIGN ENGINEERING DIVISION
REL. 4 TO CHKS FOR ISSUE
WEIGHT: 4 PLUS SIGNATURES

AMERICAN ELECTRIC — AEP SERVICE CORP. 1 RIVERSIDE PLAZA

DWG. NO. OP-12-5137A-

DUPLICATED COMPONENTS UNIT 1 OR 2

SHARED COMPONENTS UNITS 1 & 2

INSIDE REACTOR CONTAINMENT UNIT 1 OR 2

OUTSIDE REACTOR CONTAINMENT UNIT 1 OR 2

FROM ACCUMULATOR TANK DRAINS SEE DWG'S. 1-5143A, G/6, L/6 AND 2-5143A, G/6, L/6

FROM ACCUMULATOR TANK DRAINS SEE DWG'S. 1-5143A, A/6, D/6 AND 2-5143A, A/6, D/6

REACTOR COOLANT PUMPS SECONDARY SEAL LEAKAGE SEE SKETCH "D-3" ON DWG 5128A, C/4

FROM REACTOR COOLANT SYSTEM. SEE DWG 5128, B/9, L/9

FROM REACTOR COOLANT SYSTEM. SEE DWG 5128, B/6, M/6

FROM REGENERATIVE HEAT EXCHANGER INLET. SEE DWG 5129, E/3

FROM EXCESS LETDOWN HEAT EXCHANGER. SEE DWG 5129A, C/2

FROM REGENERATIVE HEAT EXCHANGER OUTLET. SEE DWG 5129, D/3

REACTOR COOLANT PUMPS SECONDARY SEAL LEAKAGE SEE SKETCH "D-3" ON DWG 5128A, C/4

FROM REACTOR VESSEL FLANGE LEAK-OFF. SEE DWG 5128, F/2

FROM NITROGEN SUPPLY MANIFOLD. SEE DWG. 51188, C/3, H/3

FOR "MISCELLANEOUS DRAINS (VALVE LEAK-OFF) SEE DWG.S 1-5468 AT G, H/7 FOR UNIT # 1 & 2-5468 AT A, B/4 FOR UNIT # 2"

FROM REACTOR COOLANT SYSTEM PRESSURIZER RELIEF TANK. SEE SK "G-9" ON DWG 5128A, C/8

DRAIN FROM REFUELING CAVITY SEE DWG 5136 SK "L-9"

2" TO PIPE TUNNEL SUMP SEE DWG 5124, K/6

SV-77, SET AT 25 PSI

REACTOR COOLANT DRAIN TANK (TK-1) (W) SEISMIC CLASS II CAP 350 GALS 25 PSI 267°F

NOTE: DRAIN TANK THRU PUMP CASING DRAINS

FROM REACTOR COOLANT PUMPS Nº1, 2, 3 & 4 LEAK-OFF SEE DWG 5128A, B/3

EL 593'-9"

EMERGENCY DRAIN TO PIPE TUNNEL SUMP. (ROUTE 2" PIPE THRU 8" DRAIN PIPE) SEE DWG 5124, K/7

FROM REACTOR COOLANT SYSTEM PRESSURIZER RELIEF TANK. SEE SK "G-9" ON DWG 5128A, F/9

TO CLEAN WASTE HOLD-UP TANK THRU DRAIN HEADER UNIT Nº1, SEE DWG. 5137, G/7 UNIT Nº2, SEE DWG. 5138A, F/6

TO REFUELING WATER PURIFICATION PUMPS SEE DWG 5136, G/8

TO REFUELING WATER STORAGE TANK. SEE DWG: 5144, E/6.

TO CHEMICAL AND VOLUME CONTROL SYSTEM HOLD-UP TANKS. SEE DWG. 5132, G/3, K/5

REACH ROD REQUIRED

(2) REACTOR COOLANT DRAIN PUMPS (W) SEISMIC CLASS II

PUMP "E" 50 GPM 150 FT TDH (PP-52)

PUMP "W" 150 GPM 150 FT TDH (PP-51)

ICE CONDENSER FAN COOLER UNITS DRAIN POT (SC. III)

DETAIL "B-9" (UNIT 2 ONLY)

FROM UNIT Nº2 REACTOR COOLANT DRAIN TANK VENT

FROM "N" WASTE GAS COMPRESSOR SEE DWG 5139, B/7

FROM "S" WASTE GAS COMPRESSOR SEE DWG 5139, C/7

2" TO WASTE GAS COMPRESSOR PACKAGES. SEE SKETCH "9" ON DWG 5139, E/6

FROM VOLUME CONTROL TANK. SEE DWG 5129A, L/3

UNIT Nº1 UNIT Nº2

1" FROM TANK TK-129 VENT SEE DWG. 5137, F/8

2-DSI 201 (UNIT Nº2)

3/4" FROM "N" BORIC ACID EVAPORATOR SEE DWG 5133, M/3

FROM "S" BORIC ACID EVAPORATOR SEE DWG. 5133, M/3

FROM AUTOMATIC GAS ANALYZER SEE DWG. 5141, J/2

1/2" FROM UNIT Nº2 VOLUME CONTROL TANK GAS SAMPLES. SEE DWG. 5141, L/6

FROM SPENT RESIN STORAGE TANK. SEE DWG. 5138, H/6

FLOOR EL 609'-0"

1" FROM TANK TK-126 VENT, SEE DWG. 5137, F/7

EL 587'-0"

FROM HOLD UP TANKS SEE DWG. 5132, E/7

TOP OF ICE CONDENSERS, EL. 715'-7 1/2"

CONN'S. TYPICAL FOR (1) OF (5) ICE COND. FAN COOLER UNITS DRAINS. SEE DWG. 5146B, C, D/5.

1" OVERFLOW FROM GLYCOL EXPANSION TK. SEE DWG 5146B, F/1

FROM UPPER CONTAINMENT VENTILATION UNITS DRAINS SEE DWG. 5147, N/1.

EL. 695'-0"

FROM INSTRUMENTATION ROOM VENTILATION UNITS. SEE DWG. 5147A, G/9

FROM LOWER CONTAINMENT VENTILATION UNITS DRAINS SEE DWG. 5147. K/9.

EL 612'-0"

CONTAINMENT VENTILATION UNITS DRAIN POT POT (12" DIA.) (S.C. III)

1" PLUGGED CONNS.

TO PIPE TUNNEL SUMP DWG 5124 L/5

.875" DIA. "R" ORIFICE RO-53

TM 1-98-10

UNIT 1 ONLY FOR UNIT 2 SEE DETAIL "B-9"

ICE CONDENSER FAN COOLER UNITS DRAIN POT (SC. III)

.125 DIA. "R" ORIFICE RO-54

*ALL PIPING CLASS B-33 UNLESS OTHERWISE NOTED.

SKETCH "L-8"

CONTAINMENT AND INSTRUMENTATION ROOM VENTILATION AND ICE CONDENSER FAN COOLER UNITS DRAINS UNIT 1 OR 2

GENERAL NOTES

- UNLESS OTHERWISE NOTED ON THIS DRAWING:
- REFER TO DRAWING 12-5104 FOR "-AND OPERATED VALVE IDENTIFICATION NUMBERS" NOTES.
- THE UNIT PREFIX DESIGNATION FOR EACH COMPONENT IDENTIFICATION NO. IS " 12 ".

LEGEND

VENT PIPING

DRAIN PIPING

SYMBOLS

DIAPHRAGM SEAL

FOR VALVE, INSTRUMENT SAMPLING, PIPE MATERIAL AND OTHER SYMBOLS NOT EXPLAINED ON THIS DWG. AND FOR MARK NUMBER CODES, SEE DWG. 12-5103 AND 12-5104

(W) BY WESTINGHOUSE

ALL INSTRUMENTATION BY (W)

ALL VALVES BY (W) EXCEPT AS NOTED. ALSO NOTE THAT IN DRAIN & VENT LINES (W) SUPPLIES ONLY THE FIRST SHUT-OFF VALVE NEAREST ORIGIN

EQUIPMENT SUPPLIED BY (W) AS NOTED

NOTE: "B" EQUIPMENT SEISMIC CLASS AS NOTED.

DATE	NO.	DESCRIPTION	APPD.
5-23 DC	19	DELETED: REQUIREMENT FOR TM 2-98-02 PHZ/EJC. INCORPORATED PER 2-OCP-4464 REV. 1 ISSUED FOR RECORD EH/MA AT/JJ/EJC.	GG JJ/AJ C

REVISIONS

FILENAME: op-12-5137a.019
(raster file): op-12-5137a 19.cit

"THIS DRAWING IS THE PROPERTY OF THE AMERICAN ELECTRIC POWER SERVICE CORP. AND TO BE LOANED UPON CONDITION THAT IT IS NOT TO BE REPRODUCED OR COPIED, IN WHOLE OR IN PART, OR USED FOR FURNISHING INFORMATION TO ANY PERSON OUTSIDE THE WRITTEN CONSENT OF THE AEP SERVICE CORP. OR FOR ANY PURPOSE DETRIMENTAL TO THEIR INTEREST, AND IS TO BE RETURNED UPON REQUEST"

INDIANA MICHIGAN POWER COMPANY

DONALD C. COOK NUCLEAR PLANT

BRIDGMAN MICHIGAN

FLOW DIAGRAM
WDS VENTS & DRAINS
UNIT NO. 1 & 2 SHEET 2 OF 2
EXCEPTIONS ARE NOTED

DWG. NO. OP-12-5137A-19

ARCH	CLEC	MECH	STR

SCALE: DR:
DATE: CH:

DESIGN ENGINEERING DIVISION

REFER TO OWNERS ENG. DESIGN MICRO-FILM FOR SIGNATURES

DWG. NO. OP-1-5124

LOCATION PLAN CONTAINMENT

N

℄ CONTAINMENT

ICE CONDENSER (ABOVE)

REACTOR CONTAINMENT

VENT WELL

MISSILE BARRIER

REACTOR CAVITY SUMP

SEAL TABLE

REFUELING CANAL

℄ REACTOR

DRAINS

INSTRUMENT ROOM SUMP

STAIRWELL

RECIRC. SUMP

PIPE TUNNEL (ANNULUS) SUMP

LOWER CONTAINMENT SUMP

ICE CONDENSER

℄ EL. 636'-6"

12" F1255 FLAP VALVE TO HOLD AGAINST 6" OF WATER (PREVENTS FLOW OF COLD AIR)

IMB OMB

ELEV. 641'-8 1/4"

(21) 12" DRAIN LINES SPACED AROUND CONTAINMENT

TRANSITE PIPE

1 1/2" LOW POINT DRAIN (TYPICAL)

(TYPICAL)

3" DRAIN HEADER

3" DRAIN

SPILL FROM LOWER CONTAINMENT TO REACTOR CAVITY SUMP (65 SQ. FT. SPILL AREA)

SEAL TABLE

EL. 620'-0"

3/4"

11/2"

3.25" ALARM EL. 612'-1"

DRAIN INVERT EL. 612'-3"

(7) 8" EQUIPMENT COMPARTMENT OPEN DRAINS TO INSIDE MISSILE BARRIER (TYP)

DLA 777

DLA 776

DLA 773

ELEV. 612'-0"

ELEV. 612'-0"

(4) FLOOR DRAINS

(3) FLOOR DRAINS

3" VENT WELL DRAIN

2.5" ALARM EL. 611'-9"

1" ALARM EL. 610'-10"

ELEV. 610'-6"

(7) 8" EQUIPMENT COMPARTMENT OPEN DRAINS

INSTRUMENT ROOM SUMP (SEE DET. "B-4" DWG. 5123A)

2 1/2"

EL. 609'-6"

8"

3"

CONT'MT. VENT'L. DRAIN POT OVERFLOW DWG. 5137A, A/7

2 1/2"

DR126

DR296

DR125

(2) 3" STAIRWELL DRAINS

ELEV. 609'-0"

ELEV. 609'-0"

CPS11

1/2"

1/2"

2"

3"

3"

2"

1 1/2"

CPN-41

INSIDE REACTOR CONTAINMENT

OUTSIDE REACTOR CONTAINMENT

CPN-67

TO CONTAINMENT SUMP POST ACCIDENT SAMPLING SYSTEM. SEE DWG. 5141C, A/6

SM-25

SM-26

EPX 417

1" VENT DR-124

DPX 600

DCR 600

DCR 121

DCR 601

DR 122

DR 123

3" TO STA. DRAINAGE (DIRTY) WASTE HOLD-UP TANK, SEE DWG. 5123B, B/9

HIGH ALARM, EL 596'-0"

DRAINS SPILL TO LOWER CONTAINMENT SUMP OVER FLOOR EL. 596'-5 5/8" (BLANK-OFF DURING REFUELING)

10" DRAIN

12" DRAINS

REFUELING CANAL

ELEV. 609'-10 1/2"

NLI-321

NLI 320

PROBE HIGH LIMIT EL. 614'-0"

1/2"

NLI-311

NLA 310

PROBE HIGH LIMIT EL. 599'-6"

DLS 611

PROBE LOW LIMIT EL 599'-3"

RO-11B, 1/2" ORIFICE

EL. 599'-3 3/8"

EL. 598'-9 3/8"

ESX 400

PUMP № 2B START EL. 591'-0"

PUMP № 2A START EL. 594'-0"

PUMP № 2A & 2B STOP EL. 590'-6"

PROBE LOW LIMIT EL. 589'-5"

EL. 589'-0"

CONTAINMENT SUMP SAMPLE PUMP (PP-104) 80 GPM 3.7 HP 75 FT DTH 3600 RPM

LOWER CONTAINMENT SUMP

(2) PUMPS (W) 50 GPM 100 FT. TDH 1750 RPM 5 HP

MAX DISCH. PRESSURE 5.5 PSIG

2'-4" X 4'-10" X 9'-9 3/8" DEEP.

SEISMIC CLASS II

DR114-2B

DR114-2A

DR113-2A

DR115-2B

PUMP № 2A

PP-36A

PUMP № 2B

PP-36B

GRATING

DR-184

CURB

SCREEN (1 3/8" MESH) ON 8" PIPE

INV. ELEV. 591'-0"

8"

EL. 591'-1"

18"

EL. 590'-0"

RECIRCULATION SUMP 10'-6" x 18'-0" x 6'-0" DEEP

TO RESIDUAL HEAT REMOVAL PUMPS AND CONTAINMENT SPRAY PUMPS SEE DWG 5143, A/4 & 5144, E/9

IN-CORE INSTRUMENTATION CHANNEL

CURB

EL. 598'-9 3/8"

IMB OMB

EL. 593'-6"

INV. ELEV. 593'-6"

REACTOR COOLANT DRAIN TANK PIT

PIPE TUNNEL FLOOR DRAINS

(7) DRAINS

(6) DRAINS

CPS-145

INV. ELEV. 593'-2"

ELEV. 591'-1"

2" EMERGENCY DRAIN FROM REACTOR COOLANT DRAIN TANK SEE DWG. 5137A; D/6 (PIPE RUN THRU 8" DRAIN LINE)

FROM REACTOR COOLANT DRAIN TANK RELIEF VALVE SEE DWG. 5137, B/5

PUMP № 2A

PUMP № 2B

DLA 620

DLS 622

DLS 621

DR119-2A

DR119-2B

DR120-2A

DR120-2B

PP-61A

PP-61B

PUMP № 2A START EL. 592'-6"

PUMP № 2B START EL. 593'-0"

PUMP № 2A STOP EL. 592'-6"

PUMP № 2B STOP EL. 592'-5"

LOW ALARM EL. 592'-2"

PIPE TUNNEL (ANNULUS) SUMP (2 PUMPS)

50 GPM 60 FT TDH 3600 RPM 2 HP

MAX DISCH. PRESSURE 40 PSIG

2'-6" x 4'-6" x 7'-6 3/4" DEEP

SEISMIC CLASS II

3" BLANKED-OFF CONNECTION

DR117-3A

DR118-3A

DR117-3B

DR118-3B

DLA 630

DLS 632

DLS 631

"3B"

"3A"

CURB (WITH 3" HIGH X 6" WIDE SLOTS)

ELEV. 566'-11 3/8"

HIGH ALARM EL. 566'-6"

(2) PUMPS 25 GPM 85 FT. TDH 3600 RPM 3 HP

MAX. PUMP DISCH. PRESSURE 40 PSIG

SEISMIC CLASS II

LOW ALARM EL. 565'-8"

PUMP № 3A

PP-59A

PUMP № 3B

PP-59B

PUMP № 3B START EL. 566'-5"

PUMP № 3A START EL. 566'-3"

PUMP № 3B STOP EL. 566'-0"

PUMP № 3A STOP EL. 565'-10"

EL. 564'-11 3/4"

REACTOR CAVITY SUMP 2'-6" x 4'-6" x 2'-0" DEEP

EPX 496

SM-27

1/2"

NS-357

CPN-67

INSIDE CONTAINMENT

OUTSIDE CONTAINMENT

PIPE END THREADED FOR LEAK RATE TEST

FROM POST-ACCIDENT SAMPLING SYSTEM. SEE DWG. 5141C, B/7

NOTE:

FOR REFUELING CAVITY DRAINAGE SEE SPENT FUEL PIT COOLING & CLEAN-UP DIAGRAM DWG. 5136

GENERAL NOTES

- UNLESS OTHERWISE NOTED ON THIS DRAWING:
- REFER TO DRAWING 12-5104 FOR "HAND OPERATED VALVE IDENTIFICATION NUMBERS" NOTES.
- THE UNIT PREFIX DESIGNATION FOR EACH COMPONENT IDENTIFICATION NO. IS " 1 ".

LEGEND

DRAINAGE PIPING

AUXILIARY PIPING

FOR VALVE, INSTRUMENT, SAMPLING, PIPING MATERIAL AND OTHER SYMBOLS NOT EXPLAINED ON THIS DWG. AND FOR MARK NUMBER CODES, SEE DWG. 12-5103 & 12-5104

(W) BY WESTINGHOUSE CO.

ALL EQUIPMENT SEISMIC CLASS IS AS NOTED.

NOTE:

ALL CONTAINMENT SUMP PUMPS TO BE TRIPPED OFF ON ISOLATE SIGNAL.

SUMPS SEISMIC CLASSIFICATION SAME AS STRUCTURE IN WHICH ARE LOCATED"

FOR CODE CLASS 2 INSTRUMENT CONNS THE ISI BOUNDARY EXTENDS TO AND INCLUDES THE FIRST ROOT VALVE.

FOR CODE CLASS 2 VENTS & DRAINS THE ISI BOUNDARY EXTENDS TO AND INCLUDES THE FIRST NORMALLY CLOSED VALVE.

-- CAUTION --
THE SET POINTS INDICATED ARE PROVIDED ONLY TO ASSIST IN UNDERSTANDING THE DRAWINGS. REFER TO APPROPRIATE SET POINT CONTROL DOCUMENTS FOR ACTUAL DEVICE SET POINTS. SAFETY VALVE SETTINGS ARE AS INDICATED ON DRAWING AND ARE NOT INCLUDED IN THE SCOPE OF THE CAUTION STATEMENT.

DATE	NO.	DESCRIPTION	APPD.
2/22/99	22	REVISED: CONNECTION AT J/7, 4" PIPE 5122C AT K/7 PER C/R 99-2333 A/B 023526. REVISED: VA. NO'S FR. DR125 TO DR126 & FR. DR126 TO DR296 AT L/4, FR. DR296 TO DR125 AT L/4 PER C/R 99-2761 A/B 023515. DLS/C.C.	JB
2-8-99	21	ADDED: VALVE DR296 AT AT L/5. REVISED: LOCATION OF VALVES DR125 FROM L/5 TO L/4 & DR126 FROM L/4 TO L/5 PER C/R 99-0690 A/B 023471. DLS/C.C.	LB
7-15-98	20	ADDED: REMOVABLE SCREEN (1 3/8" MESH) TO THE 8" PIPE ON THE RECIRCULATION SUMP AT D/7 PER 12-DCP-0686 A/B 022263. GVC.C.	LB
5-6-98	19	DELETED: CURB CALL OUT NOTE AT M/6 PER C/R 98-1254 A/B 022056. DLS/CC	LB for JCJ
2-25-98	18	REVISED CAUTION NOTE & LOCATION FROM N-M/3 TO K/4-5 PER C/R 97-1530 A/B 021737AD. DLS/C.C.	JCJ
7-23-97	17	THIS DRAWING HAS BEEN CONVERTED FROM A MANUAL FORMAT TO AN IGS-SCANNED DRAWING FORMAT AND SUPERSEDES ALL PREVIOUS REVISIONS. VOIDED: 18 x 17 REVISION RECORD SHEET; FOR VALVE DATA SEE FOR. DELETED: HAND OPERATED VALVE IDENTIFICATION NUMBERS NOTE AT G/6-7. ADDED: NOTE AT G/1. REVISED: REF DWG COORDINATES FROM B/8 TO M/4 AT E/8 PER ADM 97-8704, A/B 020614R. GVC.C.	JCJ

REVISIONS

"THIS DRAWING IS THE PROPERTY OF THE AMERICAN ELECTRIC POWER SERVICE CORP. AND IS LOANED UPON CONDITION THAT IT IS NOT TO BE REPRODUCED OR COPIED, IN WHOLE OR IN PART, OR USED FOR FURNISHING INFORMATION TO ANY PERSON WITHOUT THE WRITTEN CONSENT OF THE AEP SERVICE CORP., OR FOR ANY PURPOSE DETRIMENTAL TO THEIR INTERESTS, AND IS TO BE RETURNED UPON REQUEST"

INDIANA MICHIGAN POWER COMPANY

DONALD C. COOK NUCLEAR PLANT

BRIDGMAN MICHIGAN

FLOW DIAGRAM STATION DRAINAGE CONTAINMENT

DWG. NO. OP-1-5124-22

ARCH | ELEC | MECH | STR

SCALE: NONE

DATE: 1-90

DESIGN ENGINEERING DIVISION

REFER TO ORIG. END. ISSUE MICROFILM FOR SIGNATURES

AMERICAN ELECTRIC POWER

AEP SERVICE CORP. 1 RIVERSIDE PLAZA COLUMBUS, OH 43215

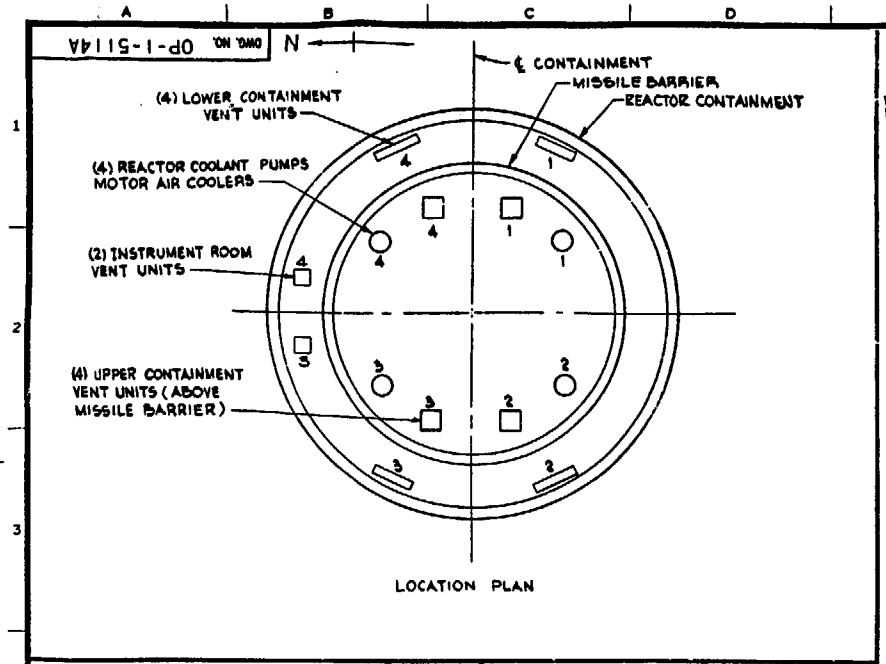

UNIQUE VALVE NUMBERS (UVN) AT LOWER CONTAINMENT VENTILATION UNITS					
BANK NO. 1		BANK NO. 2		BANK NO. 3	
SYMBOL	UVN	SYMBOL	UVN	SYMBOL	UVN
1	NSW213-1 NSW213-2 NSW213-3 NSW213-4	4	NSW216-1 NSW216-2 NSW216-3 NSW216-4	7	NSW219-1 NSW219-2 NSW219-3 NSW219-4
2	NSW214-1 NSW214-2 NSW214-3 NSW214-4	5	NSW217-1 NSW217-2 NSW217-3 NSW217-4	8	NSW220-1 NSW220-2 NSW220-3 NSW220-4
3	NSW215-1 NSW215-2 NSW215-3 NSW215-4	6	NSW218-1 NSW218-2 NSW218-3 NSW218-4	9	NSW221-1 NSW221-2 NSW221-3 NSW221-4
16	NSW228-1 NSW228-2 NSW228-3 NSW228-4	13	NSW225-1 NSW225-2 NSW225-3 NSW225-4	10	NSW222-1 NSW222-2 NSW222-3 NSW222-4
17	NSW229-1 NSW229-2 NSW229-3 NSW229-4	14	NSW226-1 NSW226-2 NSW226-3 NSW226-4	11	NSW223-1 NSW223-2 NSW223-3 NSW223-4
18	NSW230-1 NSW230-2 NSW230-3 NSW230-4	15	NSW227-1 NSW227-2 NSW227-3 NSW227-4	12	NSW224-1 NSW224-2 NSW224-3 NSW224-4
INLET 19 DRAIN	NSW521-1 NSW521-2 NSW521-3 NSW521-4	INLET 20 DRAIN	NSW522-1 NSW522-2 NSW522-3 NSW522-4	INLET 21 DRAIN	NSW523-1 NSW523-2 NSW523-3 NSW523-4
OUTLET 22 DRAIN	NSW526-1 NSW526-2 NSW526-3 NSW526-4	OUTLET 23 DRAIN	NSW525-1 NSW525-2 NSW525-3 NSW525-4	OUTLET 24 DRAIN	NSW524-1 NSW524-2 NSW524-3 NSW524-4

CHART TO CO-ORDINATE SUPPLY AND RETURN LINES TO EQUIPMENT NOT SHOWN		
SYMBOL	EQUIP. NUMBER	EQUIPMENT
A	1	TO AND FROM VENTILATION UNITS, LOWER CONTAINMENT
B	3	
C	4	
D	3	TO AND FROM VENTILATION UNITS, INSTRUMENTATION ROOM
E	1	TO AND FROM VENTILATION UNITS IN UPPER CONTAINMENT
F	2	TO AND FROM VENTILATION UNITS UPPER CONTAINMENT
G	3	TO AND FROM VENTILATION UNITS IN UPPER CONTAINMENT
H	2	TO AND FROM REACTOR COOLANT PUMPS, MOTOR AIR COOLER
J	3	
K	4	

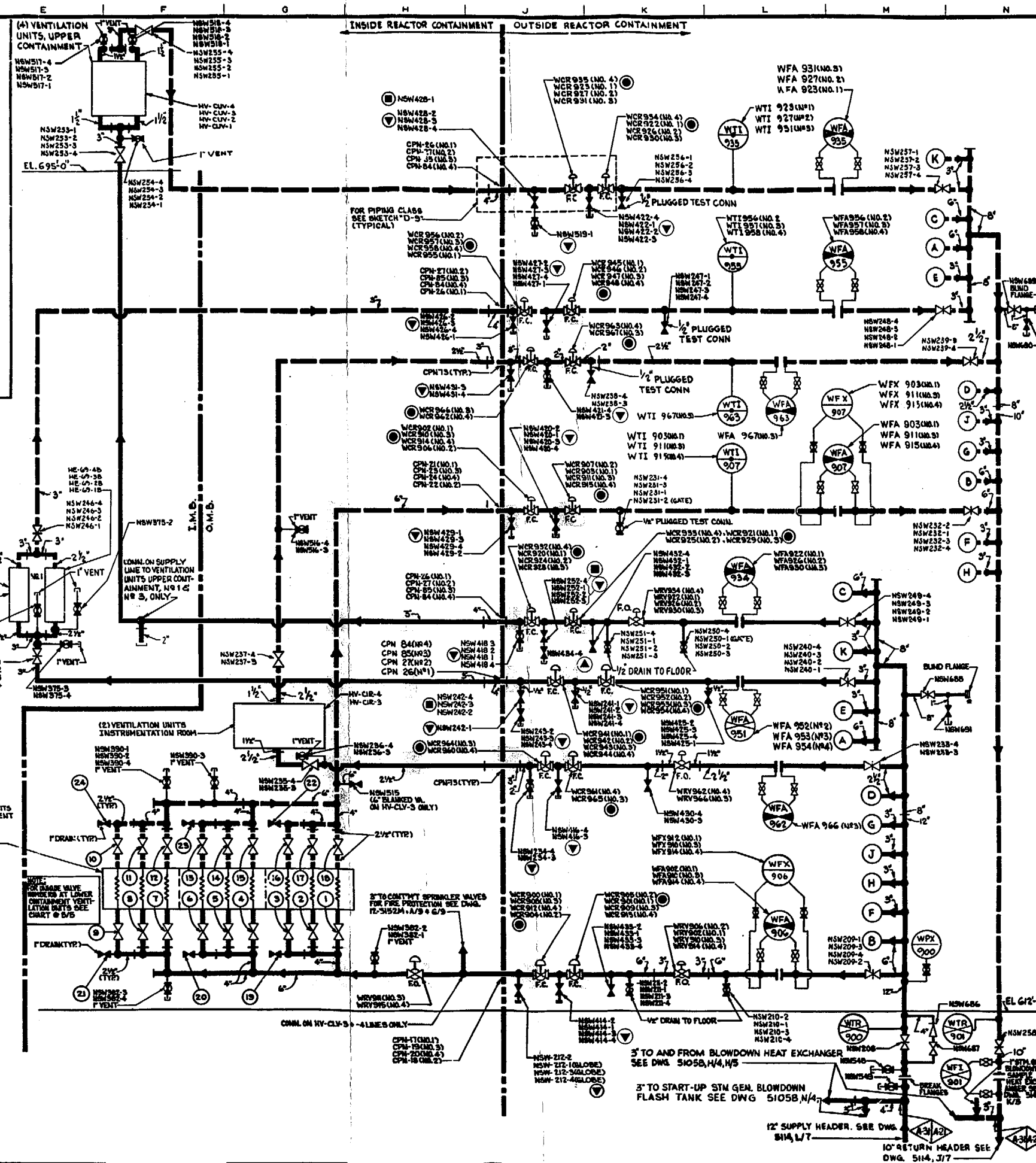

GENERAL NOTES

- UNLESS OTHERWISE NOTED ON THIS DRAWING:
- REFER TO DRAWING 12-5104 FOR "HAND OPERATED VALVE IDENTIFICATION NUMBERS" NOTES.
- THE UNIT PREFIX DESIGNATION FOR EACH COMPONENT IDENTIFICATION NO. IS " 1 ".

LEGEND
- SUPPLY PIPING
- RETURN PIPING
- AUXILIARY PIPING

FOR VALVE, INSTRUMENT, SAMPLING, PIPE MATERIAL AND OTHER SYMBOLS NOT EXPLAINED ON THIS DWG., AND FOR MARK NUMBER CODES, SEE DWGS 12-5103 & 12-5104

* TEMPORARY CONNECTION FOR CONTAINMENT COOLING SKID (TYPICAL 2 PLACES)

A. ALL EQUIPMENT SEISMIC CLASS II EXCEPT AS NOTED + SEE SKETCH "D-9".
B. FOR CODE CLASS 2 INST. CONNS. THE I&C BOUNDARY EXTENDS TO + INCLUDES THE FIRST ROOT VALVE.
C. FOR CODE CLASS 2 VENTS AND DRAINS THE I&C BOUNDARY EXTENDS TO + INCLUDES THE FIRST NORMALLY CLOSED VALVE.

DATE	NO.	DESCRIPTION	APPD.
6/14/99	24	REVISED NOTE FOR SYMBOL E AND G AT A/8-9 PER C/R 99-15017, DCR 99-0127.	

REVISIONS

FILENAME: OP-1-5114A.024
(raster file): OP-1-5114A 24.cit

"THIS DRAWING IS THE PROPERTY OF THE AMERICAN ELECTRIC POWER SERVICE CORP. AND IS LOANED UPON CONDITION THAT IT IS NOT TO BE REPRODUCED OR COPIED, IN WHOLE OR IN PART, OR USED FOR FURNISHING INFORMATION TO ANY PERSON WITHOUT THE WRITTEN CONSENT OF THE AEP SERVICE CORP., OR FOR ANY PURPOSE DETRIMENTAL TO THEIR INTEREST, AND IS TO BE RETURNED UPON REQUEST"

INDIANA MICHIGAN POWER COMPANY

DONALD C. COOK
NUCLEAR PLANT

BRIDGMAN MICHIGAN

FLOW DIAGRAM NON-ESSENTIAL SERVICE WATER

DWG. NO. OP-1-5114A-24

ARCH	ELEC	MECH	STR

SCALE: NONE
DATE: 1/96

DESIGN ENGINEERING DIVISION
REFER TO OFFICE AND FIELD MICROFILM FOR SIGNATURES

AEP AMERICAN ELECTRIC POWER

AEP SERVICE CORP.
1 RIVERSIDE PLAZA
COLUMBUS, OH 43216

ATTACHMENT 3 TO C1100-01

VALVE DRAWINGS

EQUIP. .....
APPROVED IN GENERAL
COOK NUCLEAR PLANT
LIMITS 1 & 2
AMERICAN ELECTRIC POWER SERVICE CORP.
MECHANICAL SECTION
BY ..... DATE MAY 10 1982

WCR- 960
961
962
963
964
965
966
967

REV	DESCRIPTION	BY	CHK	DATE

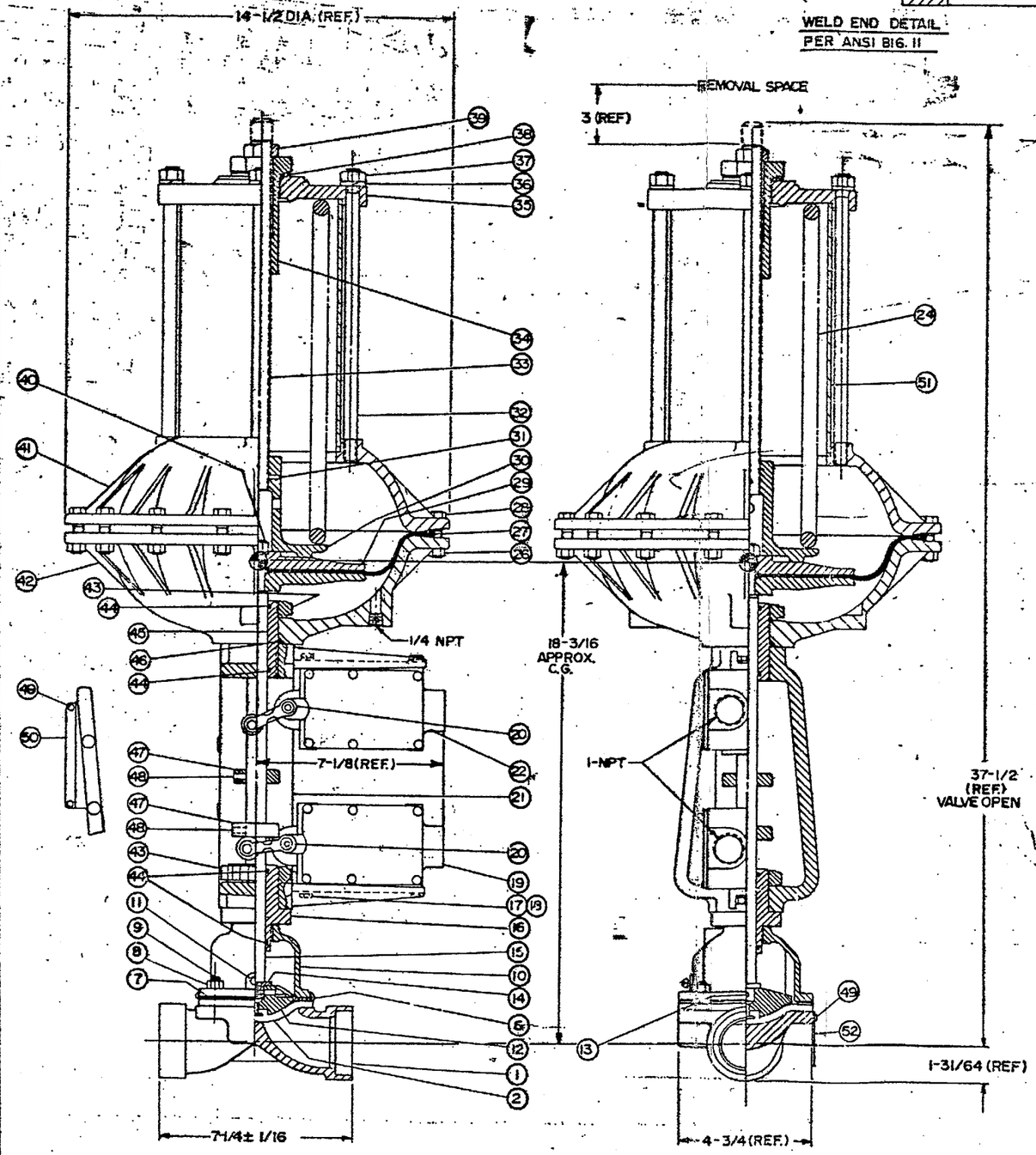

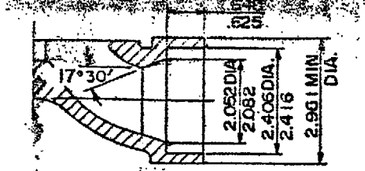

WELD END DETAIL
PER ANSI B16.11

LIST OF MATERIALS

ITEM	NO. REQ'D	DESCRIPTION	MATERIAL	MATERIAL SPEC.	REMARKS
1	1	BODY, SOCKET WELD	STN. STL.	ASTM A-351 GR. CF8	
* 2	1	DIAPHRAGM GR. M	EPDM		
3					
4					
5					
6	1	FINGER PLATE	STEEL		
* 7	1	GASKET	EPDM		
8	4	NUT, BONNET 7/16-20	STN. STL.	ASTM A-194 GR.8	
9	4	STUD, BONNET 7/16-20	STN. STL.	ASTM A-453 GR.660	
10	1	BONNET	STN. STL.	ASTM A-351 GR.CF8	
11	1	"V" NOTCH VENT PLUG	STN. STL.		
12	1	COMPRESSOR	C. I.		
13	1	COMPRESSOR PIN	STN. STL.		
14	1	STOP COLLAR	STEEL		PART OF ITEM 15
15	1	SPINDLE	STN. STL.		
16	1	ADAPTER BUSHING	STEEL		
17	4	HEX. CAP SCR. 5/16-18x3/4	STEEL		
18	4	SPRING LOCK WASHER 5/16	STEEL		
19	1	LIMIT SWITCH, NAMCO	EA 18015302		
20	2	LEVER ARM, NAMCO	EL150-53301		
21	1	YOKE	D.I.		
22	1	NAMCO LIMIT SWITCH	EA18014302		
23					
24	1	SPRING NO. 97	STEEL		
25					
26	16	HEX. NUT 3/8-24	STEEL		
* 27	1	#50 ACTUATOR DIAPHRAGM	ELASTOMER		
28	16	HEX. CAP SCR. 3/8-24x1-3/4	STEEL		
29	2	ACTUATOR PLATE	C.I.		
30	1	SPRING SEAT	IRON		
31	1	SPIROL PIN	STN. STL.		
32	4	COLUMN	STEEL		
33	1	SPRING ROD	STEEL		
34	1	ADJUSTING BUSHING	M. I.		
35	1	SPRING COVER	IRON		
36	4	SPRING LOCK WASHER 1/2	STEEL		
37	4	HEX. NUT 1/2-13	STEEL		
38	1	THRUST WASHER	STEEL		
39	1	HEX. JAM NUT 3/4-10	STEEL		
40	1	HEX. JAM NUT 1/2-20	STEEL		
41	1	UPPER COVER	D.I.		
42	1	LOWER COVER	D.I.		
43	2	ADAPTER BUSHING NUT	M.I.		
* 44	4	"O" RING DASH #116	EPDM		
45	1	ADAPTER BUSHING	STEEL		
* 46	1	"O" RING DASH # 326	EPDM		
47	2	SWITCH ACTUATOR	STEEL		
48	4	SOC. SET SCR. 1/4-28x3/8	STEEL		
49	4	DRIVE SCREW #4 x3/16	STEEL		
50	1	INDICATOR SCALE	STN. STL.		
51	1	HOUSING	STEEL		
52	1	VALVE IDENT. PLATE	STN. STL.		

NOTES:
1. RECOMMENDED SPARE PARTS ARE MARKED WITH AN ASTERISK (*) ON THE LIST OF MATERIALS.
2. APPROXIMATE TOTAL VALVE WEIGHT = 134 LBS.
3. DESIGN PRESSURE & TEMP. = 135 PSIG AT 100 °F.
4. MAXIMUM LINE PRESSURE = 175 PSIG AT 100 % P.D.
5. AIR REQUIREMENTS = 35 PSIG TO OPEN

DC-132631

CERTIFIED
CUSTOMER ORDER NO. 03187-041-1
INDIANA & MICHIGAN ELECTRIC CO.
REGION MID WEST
DIA-FLO ORDER NO. N81-53255 ITEM NO. 1
DRAWN BY BBB DATE 9-10-81
APPROVED BY JAM DATE 9-16-81

VALVE IDENTIFICATION
ITT Grinnell Valve Co., Inc.
DIA-FLO DIVISION
LANCASTER, PA. 17603

2" NUCLEAR DIAPHRAGM VALVE
w/ 3250L AIR MOTOR

SD-C-109700 | SHT. 1/1 | REV.

N-188

EQUIP. APPROVED IN GENERAL
COOK NUCLEAR PLANT UNITS 1 & 2
PASCO ENGINEERING & SERVICE CORP.
MECHANICAL DESIGN SECTION
BY LD DATE MAY 10 1982

WCR-920n WCR-941n
921 — 942n
922 — 943n
923 — 944n
924n — 945
925 — 946
926 — 947
927 — 948
928n
929 — 951
930 — 952
931 — 953
932n — 954
933 — 955
934 — 956
935 — 957
958

REV	DESCRIPTION	BY	CHK	DATE

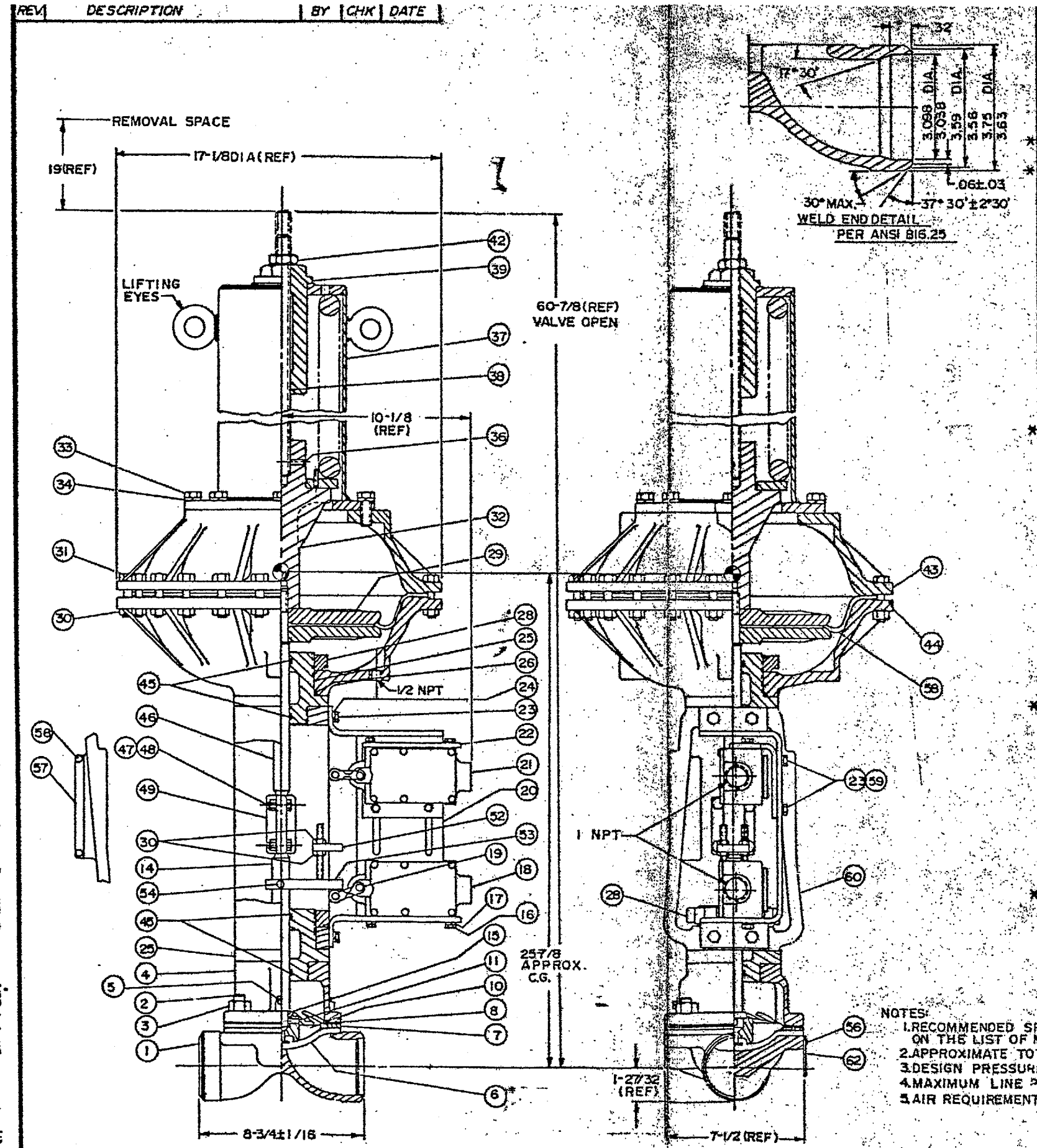

LIST OF MATERIALS

ITEM	NO. REQD.	DESCRIPTION	MATERIAL	MATERIAL SPEC.	REMARKS
1	1	BODY, BUTT WELD (SCH 40S)	STN. STL.	ASTM A-351 GR.CF8	
2	4	STUD, BONNET 5/8-18	STN. STL.	ASTM A-453 GR.660	
3	4	NUT, BONNET 5/8-18	STN. STL.	ASTM A-194 GR.8	
4	1	BONNET	STN. STL.	ASTM A-351 GR.CF8	
5	1	PLUG, V-NOTCH VENT	STN. STL.		
* 6	1	DIAPHRAGM GR. M	EPDM		
7	1	PLATE, FINGER	STEEL		
* 8	1	GASKET	EPDM		
9					
10	1	COMPRESSOR	C.I.		
11	1	PIN, COMPRESSOR	STN. STL.		
12					
13					
14	1	VALVE SPINDLE	STN. STL.		
15	1	STOP, COLLAR	STEEL		PART OF ITEM 14
16	4	HEX. HD. CAP SCR. 5/16-18x3/4	STEEL		
17	4	SPRING LOCKWASHER 5/16	STEEL		
18	1	LIMIT SWITCH, NAMCO	EA180 15302		
19	2	LEVER, ARM, NAMCO	EL010-53429		
20	1	MOUNTING BRACKET	STEEL		
21	1	LIMIT SWITCH, NAMCO	EA180 14302		
22	1	ADAPTER BRACKET	STEEL		
23	8	HEX. HD. CAP SCR. 1/4-20x5/8	STEEL		
24	4	SPRING LOCKWASHER 1/4	STEEL		
25	2	ADAPTER BUSHING	D.I.		
* 26	1	'O' RING DASH # 238	EPDM		
27					
28	2	ADAPTER BUSHING NUT	M.I.		
29	2	ACTUATOR PLATE	D.I.		
30	28	HEX NUT 3/8-16	STEEL		
31	24	HEX. HD. CAP SCR. 3/8-16x2	STEEL		
32	1	SPINDLE CONNECTOR	D.I.		
33	8	HEX. HD. CAP SCR. 1/2-13x1-1/2	STEEL		
34	8	SPRING LOCKWASHER 1/2	STEEL		
35					
36	1	SPIROL PIN	STN. STL.		
37	1	SPRING CASING ASSEMBLY	STEEL		# 130 SPRING
38	1	SPINDLE EXTENSION	STEEL		
39	1	ADJUSTING BUSHING	M.I.		
40					
41					
42	1	HEX JAM NUT 7/8-9	STEEL		
43	1	UPPER COVER	D.I.		
44	1	LOWER COVER	D.I.		
* 45	4	'O' RING DASH # 214	EPDM		
46	1	ACTUATOR SPINDLE	ST. ST.		
47	4	HEX HD. CAP SCR. 1/4-28x7/8	STEEL		
48	4	HEX NUT 1/4-28	STEEL		
49	2	COUPLING HALF	STN. STL.		
50					
51					
52	1	UPPER SWITCH ACTUATOR	STEEL		
53	1	LOWER SWITCH ACTUATOR	STEEL		
54	2	SOC. HD. SET SCR. 1/4-28x3/8	STEEL		
55					
56	4	DRIVE SCREW # 4x3/16	STEEL		
57	1	INDICATOR SCALE	STN. STL.		
* 58	1	ACTUATOR DIAPHRAGM	ELASTOMER		
59	4	INT.-EXT. LOCKWASHER 1/4	STEEL		
60	1	YOKE	D.I.		
61					
62	1	VALVE IDENT. PLATE	STN. STL.		
63					

NOTES:
1. RECOMMENDED SPARE PARTS ARE MARKED WITH AN ASTERISK(*) ON THE LIST OF MATERIALS.
2. APPROXIMATE TOTAL VALVE WEIGHT=351 LBS.
3. DESIGN PRESSURE AND TEMPERATURE=135 PSIG AT 100°F
4. MAXIMUM LINE PRESSURE=150 PSIG AT 100% P.D.
5. AIR REQUIREMENT= 90 PSIG TO OPEN.

DC-129354

CERTIFIED
CUSTOMER ORDER NO. 03187-041-1
INDIANA & MICHIGAN ELECTRIC CO.
REGION MID WEST
DIA-FLO ORDER NO. N31-53255 ITEM NO. 2
DRAWN BY BBB DATE 3-10-81
APPROVED BY LJM DATE 9-16-81

VALVE IDENTIFICATION
ITT Grinnell Valve Co., Inc.
DIA-FLO DIVISION
LANCASTER, PA. 17603

3" NUCLEAR DIAPHRAGM VALVE W/ 32101 AIR MOTOR

SD-C-109701 SHT. 1/1 REV.

N-629

EQUIP
APPROVED
IN GENERAL
COOK NUCLEAR PLANT
UNITS 1 & 2
AMERICAN ELECTRIC POWER
SERVICE CORP.
MECHANICAL DESIGN SECTION
BY AD DATE MAY 10 1982

WCR-900 n
901 —
902 —
903 —
904 n
905 —
906 —
907 —
908 n
909 —
910 —
911 —
912 n
913 —
914 —
915 —

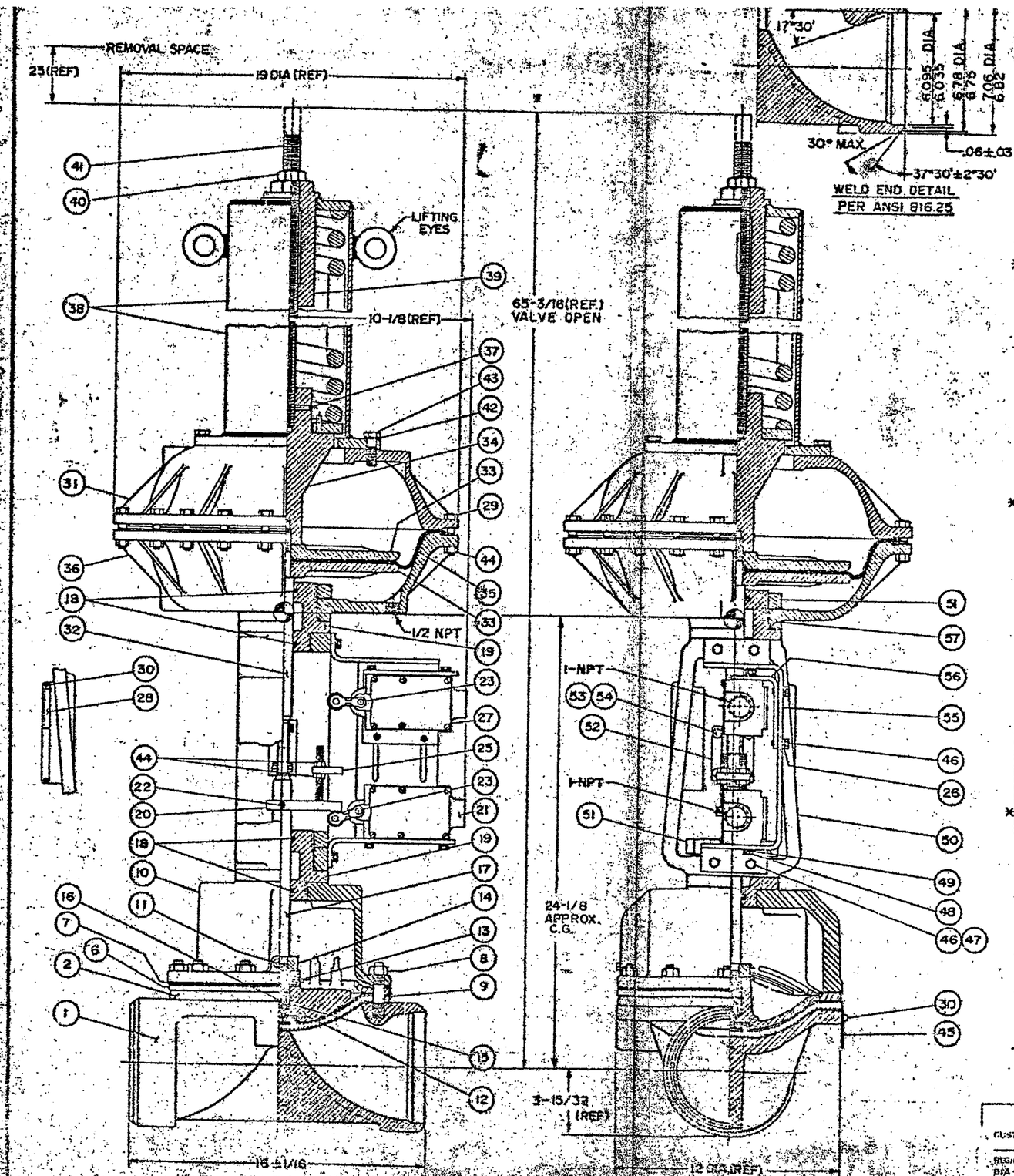

	ITEM	QTY.	DESCRIPTION	MATERIAL	MATERIAL SPEC.	REMARKS
	1	1	BODY, BUTT WELD (SCH. 40S)	STN. STL.	ASTM A351 GR.CF8	
*	2	1	DIAPHRAGM GR. M	EPDM		
	3					
	4					
	5					
	6	1	FINGER PLATE	C. STEEL		
	7	1	GASKET	EPDM		
	8	10	NUT, BONNET 5/8-18	STN. STL.	ASTM A-194 GR. 8	
	9	10	STUD, BONNET 5/8-18	STN. STL.	ASTM A-453 GR. 660	
	10	1	BONNET	STN. STL.	ASTM A-351 GR. CF 8	
	11	1	V-NOTCH VENT PLUG	STN. STL.		
	12	1	COMPRESSOR	C.I.		
	13	1	COMPRESSOR PIN	STN. STL.		
	14	1	STOP COLLAR	STEEL		
	15	1	TUBE NUT	STN. STL.		PART OF ITEM 17
	16	1	TUBE NUT KEY	BRASS		
	17	1	VALVE SPINDLE	STN. STL.		
*	18	4	"O" RING DASH #214	EPDM		
	19	2	ADAPTER BUSHING	D.I.		
	20	1	LOWER SWITCH ACTUATOR	STEEL		
	21	1	LIMIT SWITCH, NAMCO	EA180153 02		
	22	2	SOC. HD. SET SCR. 1/4-28 x 3/8	STEEL		
	23	2	LEVER ARM, NAMCO	EL010-53423		
	24					
	25	1	UPPER SWITCH ACTUATOR	STEEL		
	26	4	INT.-EXT. LOCKWASHER 1/4	STEEL		
	27	1	LIMIT SWITCH, NAMCO	EA180143 02		
	28	1	INDICATOR SCALE	STN. STL.		
	29	24	HEX. HD. CAP SCR. 3/8-16 x 2	STEEL		
	30	4	DRIVE SCREW #4 x 3/16	STEEL		
	31	1	UPPER COVER	D.I.		
	32	1	ACTUATOR SPINDLE	STN. STL.		
	33	2	ACTUATOR PLATE	D.I.		
	34	1	SPINDLE CONNECTOR	D.I.		
*	35	1	#130 ACTUATOR DIAPHRAGM	ELASTOMER		
	36	1	LOWER COVER	D.I.		
	37	1	SPIROL PIN	STN. STL.		
	38	1	SPRING CASING ASSEMBLY	STEEL		# 130 SPRING
	39	1	ADJUSTING BUSHING	M.I.		
	40	1	HEX. JAM NUT 7/8-9	STEEL		
	41	1	SPINDLE EXTENSION	STEEL		
	42	8	SPRING LOCKWASHER 1/2	STEEL		
	43	8	HEX. HD. CAP SCR. 1/2-13 x 1-1/2	STEEL		
	44	28	HEX. NUT 3/8-16	STEEL		
	45	1	VALVE IDENT. PLATE	STN. STL.		
	46	8	HEX. HD. CAP SCR. 1/4-20 x 5/8	STEEL		
	47	4	SPRING LOCKWASHER 1/4	STEEL		
	48	4	HEX. HD. CAP SCR. 5/16-18 x 3/4	STEEL		
	49	4	SPRING LOCKWASHER 5/16	STEEL		
	50	1	YOKE	D.I.		
	51	2	ADAPTER BUSHING NUT	M.I.		
	52	2	COUPLING HALF	STN. STL.		
	53	4	HEX. HD. CAP SCR. 1/4-28 x 7/8	STEEL		
	54	4	HEX. NUT 1/4-28	STEEL		
	55	1	MOUNTING BRACKET	STEEL		
	56	1	ADAPTER BRACKET	STEEL		
*	57	1	"O" RING DASH #238	EPDM		
	58					

NOTES:
1. RECOMMENDED SPARE PARTS ARE MARKED WITH AN ASTERISK (*) ON THE LIST OF MATERIALS.
2. APPROXIMATE TOTAL VALVE WEIGHT = 484 LBS.
3. DESIGN PRESSURE AND TEMP. = 135 PSIG AT 100°F.
4. MAXIMUM LINE PRESSURE = 125 PSIG AT 100% P.D.
5. AIR REQUIREMENT = 75 PSIG TO OPEN.

DC-129355

CERTIFIED
CUSTOMER ORDER NO. 03187-041-1
INDIANA & MICHIGAN ELECTRIC CO.
REGION MID WEST
DIA-FLO ORDER NO. N 51-3 ITEM NO. 3
DRAWN BY BRB DATE 3-10-81
APPROVED BY JAM DATE 3-10-81

VALVE IDENTIFICATION
ITT Grinnell Valve Co., Inc.
DIA-FLO DIVISION
LANCASTER, PA. 17603

6" NUCLEAR DIAPHRAGM VALVE
W/#32130 AIR MOTOR

SD-C-109702 SHT. 1/1

A.O. 150 #3

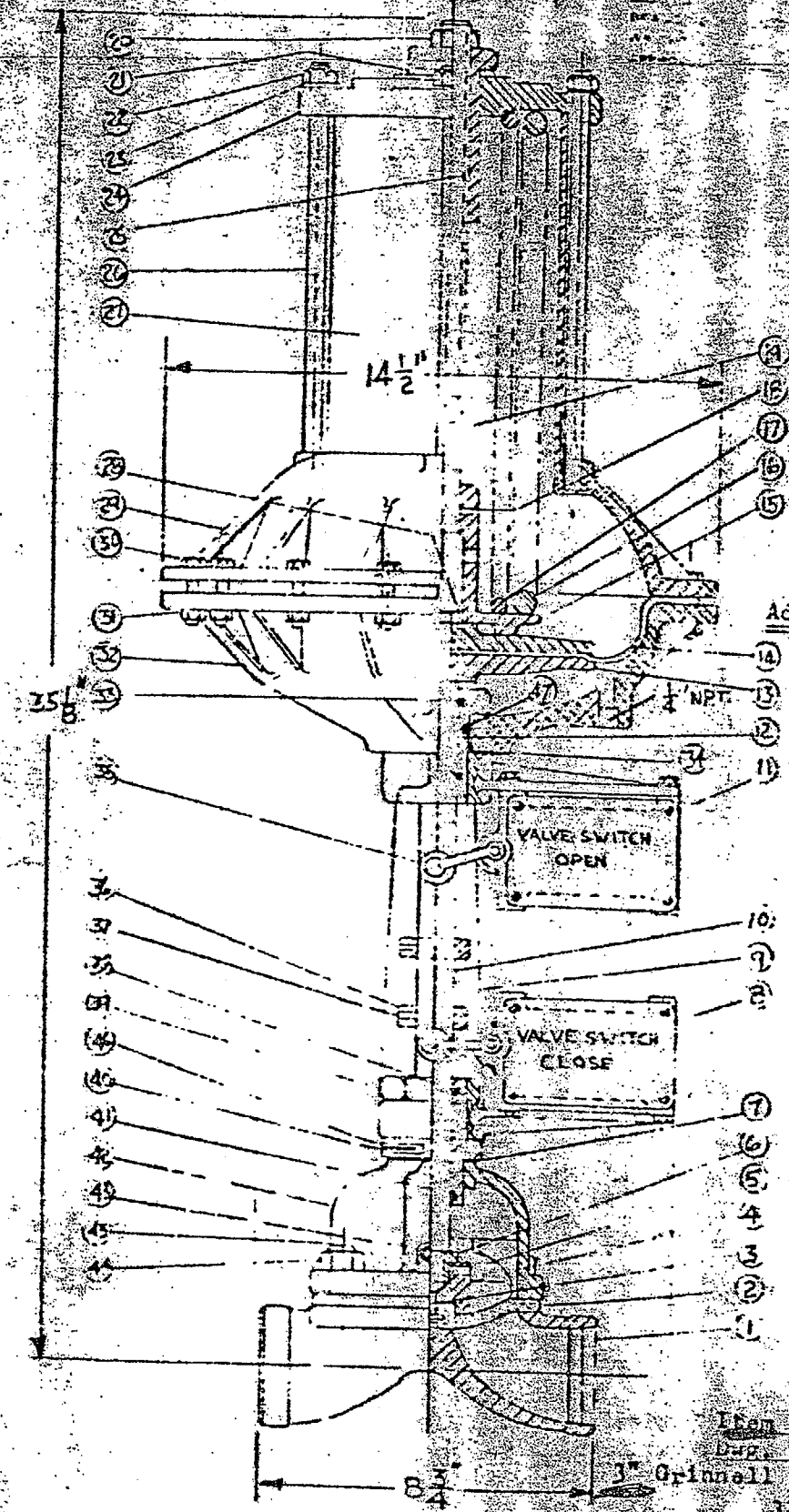

APPROVED IN GENERAL
COOK NUCLEAR PLANT UNITS 1 & 2
AMERICAN ELECTRIC POWER SERVICE CORP.
GB JUN

Additional Specifications

1. Machine seating surface under nuts on bonnet flange.
2. Chuck marks on machined ends of weld end valves not permitted.
3. Remove bonnet assembly before welding body into pipeline.

NRV-251 1-2-5128 A BW
252 1-2-5128 A J.S
255
256

DRV-600 1-2-5129 STA DRAIN J.S

Item 3XA42R 3DA42
Dwg. #WARD-CV-SS-8R Rev. 3
3" Grinnell Air Motor Diaphragm Valve
3250

LIST OF PARTS

Item	Description	Material	Quan.
1.	Butt Weld Body(Sch 10S) 304	St.St. ASTM-A351(Gr. CF8)	1
2. *	Diaphragm	Grade "M" EPT Nordel	1
3.	Diaphragm Stud	Brass	1
4.	Compressor	C.I.	1
5.	Spirol Pin	Stainless Steel	1
6.	Stop Collar	Steel	1
7. *	Bonnet Gasket	Neoprene	1
8.	Namco Switch D2400X-ST-SR		1
9.	Yoke	D.I. ASTM A-445-66T	1
10.	Spindle	Stainless Steel	1
11.	Namco Switch D2400X-ST		1
12.	Adapter Bushing	Brass	1
13.	Backing Plates	M.I.	2
14. *	Air Motor Diaphragm	Neoprene	1
15.	Spring Seat	M.I.	1
16.	Spring (Outer) #96	Steel	1
17.	Spring (Inner) #97	Steel	1
18.	Spirol Pin	Stainless Steel	1
19.	Spring Rod	Steel	1
20.	Jam Nut	Steel	1
21.	Washer	Steel	1
22.	Hex Nuts	Steel, Zinc Plated	4
23.	Lock Washers	Steel	4
24.	Spring Cover	M.I.	1
25.	Adjusting Bushing	M.I.	1
26.	Column	Steel, Zinc Plated	4
27.	Spring Housing	Steel	1
28.	Jam Nut	Steel, Zinc Plated	1
29.	Cover (Upper)	D.I. ASTM A-445-66T	1
30.	Hex Cap Screws	Steel, Zinc Plated	16
31.	Hex Nut	Steel, Zinc Plated	16
32.	Cover (Lower)	D.I. ASTM A-445-66T	1
33. *	"O" Ring #214	EPR	2
34. *	"O" Ring #326	EPR	1
35.	Lever Arm		2
36.	Switch Actuator	Steel	2
37.	Soc. Hd. Cap Screw	Steel	2
38. *	"O" Ring #214	EPR	1
39.	Adapter Bushing Nut	M.I.	1
40.	Adapter Bushing	Steel	1
41. *	"O" Ring #214	EPR	1
42.	Adapter Bonnet	D.I. ASTM-A-445-66T	1
43.	V-Notch Plug	Steel	1
44.	Bonnet Nuts	Steel ASTM-194	4
45.	Bonnet Studs	Steel ASTM-193	4
46.	Label	Vinyl Coated Mylar	1
47. *	"O" Ring 1.5 I.D. x .070 Cross Sect.	EPR	1

Note: All air inlets are 1/4" NPT

Air required - 58 PSI

* Recommended spare parts

Note: Weld ends shall be per w dwg. #498B932 sub 13 or 500E322 sub 3

Estimated Valve Weight Is 155 Lbs.

DC-128922

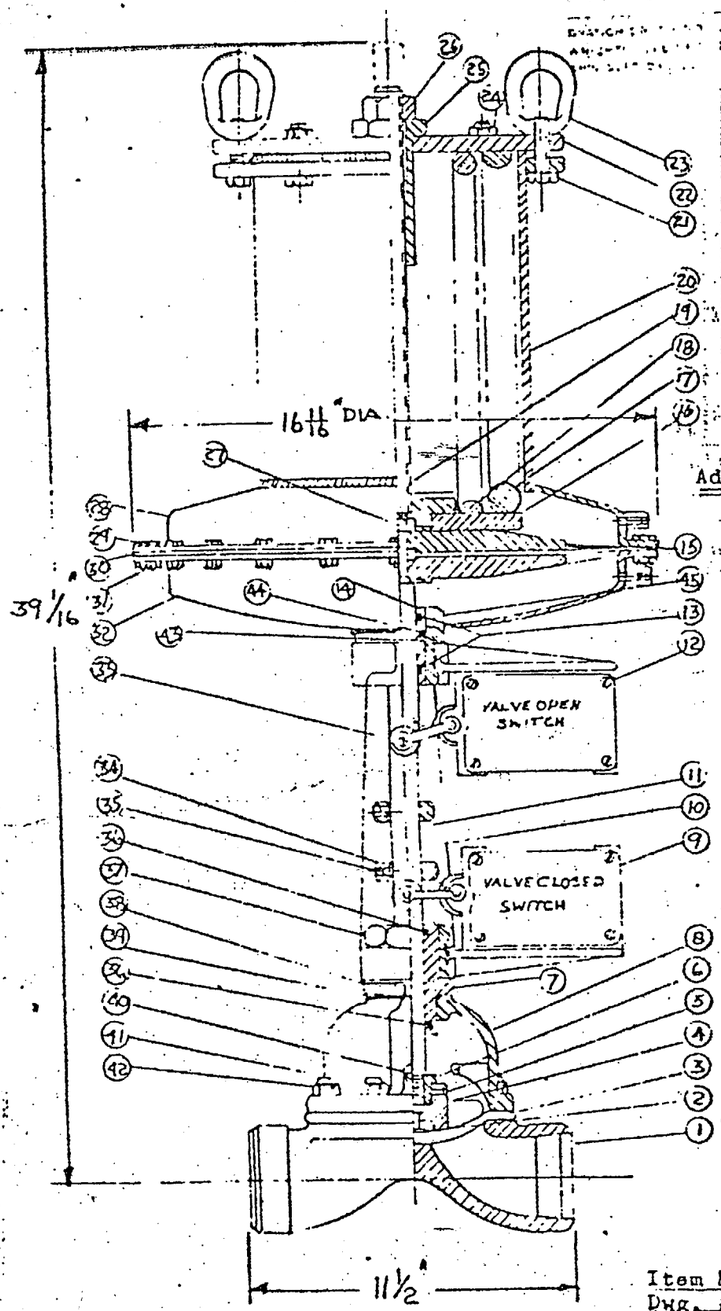

EQUIP.

APPROVED IN GENERAL

COOK NUCLEAR PLANT UNITS 1 & 2

G.B. JUN 17 1970

NOV 17 1971

Additional Specifications

1. Machine seating surface under nuts on bonnet flange.
2. Chuck marks on machined ends of weld end valves not permitted.
3. Remove bonnet assembly before welding body into pipeline.

[redacted] 5128 A

DCR-205
DCR-206
NOV 17 1971

Item 4XA42R 4DA42R
Dwg. #WAPD-CV-SS-9R Rev. 3
4" Grinnell Air Motor Diaphragm Valve
32100

LIST OF PARTS

Item	Description	Material	Quantity
1.	Butt Weld Body(Sch. 10S) 304 St.St. ASTM-A351 (Gr. CF8)		1
2.	Diaphragm Stud	Brass	1
* 3.	Diaphragm	Grade "M" EPT Nordel	1
4.	Compressor	C.I.	1
5.	Spirol Pin	Stainless Steel	1
6.	Stop Collar	Steel	1
7.	Adapter Bushing	Steel	1
8.	Adapter Bonnet	D.I. ASTM-A-445-66T	1
9.	Namco Switch D2400X-ST-SR		1
10.	Yoke	D.I. ASTM-A-445-66T	1
11.	Spindle	Stainless Steel	1
12.	Namco Switch D2400X-ST		1
* 13.	"O" Ring #214	EPR	2
14.	Adapter Bushing	Brass	1
15.	Backing Plates	M.I.	1
16.	Spring Seat	Steel	1
17.	Spring #98	Steel	1
18.	Spring #96	Steel	1
19.	Adjusting Screw	Steel	1
20.	Spring Cover	Steel	1
21.	Cap Bolts	Steel	8
22.	Spring Cover Cap	Steel	1
23.	Eye	Steel	2
24.	Cap Nuts	Steel	6
25.	Adjusting Bushing	M.I.	1
26.	Jam Nut	Steel	1
27.	Spindle Nut	Steel	1
28.	Cover (Upper)	Steel	1
29.	Hex Bolts	Steel	30
* 30.	Air Motor Diaphragm	Neoprene	1
31.	Hex Nuts	Steel	30
32.	Cover (Lower)	Steel	1
33.	Lever Arm		2
34.	Switch Actuator	Steel	2
35.	Soc. Hd. Cap Screw	Steel	4
* 36.	"O" Ring #214	EPR	2
37.	Adapter Bushing Nut	M.I.	1
38.	Label	Vinyl Coated Mylar	1
* 39.	Bonnet Gasket	Neoprene	1
40.	"V" Notch Plug	Steel	1
41.	Bonnet Studs	Steel ASTM-193	8
42.	Bonnet Nuts	Steel ASTM-194	8
* 43.	"O" Ring #325	EPR	1
* 44.	"O" Ring 1.5 I.D. x .070 Cross Sect.	EPR	1
45.	Adapter Bushing Nut	M.I.	1

* Recommended spare parts

Air required - 55 PSI

Note: Weld ends shall be per w dwg. 498B932 50B13 or 500B822 Sub 3

Estimated Valve Weight 207 Lbs.

DC 128920

FF-178

A A O A A

ATTACHMENT 4 TO C1100-01

COMMITMENTS

The following table identifies those actions committed to by Indiana Michigan Power Company (I&M) in this submittal. Other actions discussed in the submittal represent intended or planned actions by I&M. They are described to the Nuclear Regulatory Commission (NRC) for the NRC's information.

Commitment	Completion Date
I&M will resolve the interim use of ASME Section III, Appendix F.	Prior to the next scheduled Unit 1 refueling outage.
I&M will maintain the requirement to ensure that the refueling cavity drain line is empty prior to its being isolated.	Ongoing
I&M is implementing a design change to install relief valves in Unit 1 isolated piping sections where needed.	Prior to Unit 1 restart.
I&M is implementing a design change to replace cast iron valves in the non-essential service water system that could potentially fail with carbon steel valves.	Prior to Unit 1 restart.