APR 20 1981

Docket No. 50-334

RECEIVED
APR 28 1981
U.S. NUCLEAR REGULATORY COMMISSION

Mr. C. N. Dunn, Vice President
Operations Division
Duquesne Light Company
435 Sixth Avenue
Pittsburgh, Pennsylvania 15219

Dear Mr. Dunn:

SUBJECT: ORDER FOR MODIFICATION OF LICENSE CONCERNING PRIMARY COOLANT SYSTEM PRESSURE ISOLATION VALVES

This letter transmits an Order for Modification of License which revises the Technical Specifications for Facility Operating License No. DPR-66 for the Beaver Valley Power Station, Unit No. 1. The change is a result of the information you provided in response to our 10 CFR 50.54(f) letter of February 23, 1980, regarding primary coolant system pressure isolation valves. Based upon our review of your response, as well as other previously docketed information, we have concluded that a WASH-1400 Event V valve configuration exists at your facility and that corrective action as defined in the attached Order is necessary.

Attached to the Order for Modification of License is the Technical Evaluation Report (TER) which supports the Order; and the plant Technical Specifications which will ensure public health and safety over the operating life of your facility. We are aware that there may be editorial corrections to the attached TER. Please note that the Technical Specifications correctly delineate the requirements for your facility.

In addition to Event V valve configurations, we are continuing our efforts to review other configurations located at high pressure/low pressure system boundaries for their potential risk contribution to an intersystem LOCA. Therefore, further activity regarding the broader topic of intersystem LOCA's may be expected in the future.

8105050164

p

CP
3

| | | | | | | | |
|---|---|---|---|---|---|---|---|
| OFFICE | | | | | | | |
| SURNAME | | | | | | | |
| DATE | | | | | | | |

A copy of the enclosed Order is being filed with the Office of the Federal Register for publication.

Sincerely,

Original signed by:
S. A. Varga

Steven A. Varga, Chief
Operating Reactors Branch #1
Division of Licensing

Enclosure:
Order for Modification
of License

cc w/enclosure:
See next page

DISTRIBUTION
Docket File
NRC PDR
L PDR
TERA
NSIC
ORB#1 Rdg
HDenton
ECase
DEisenhut
RPurple
TNovak
RTedesco
GLainas
CParrish
DChaney
OELD
IE-3
BJones-4
ACRS-16
OPA
SECY
RDiggs
JHeltemes
Gray File+4

CP 3/24/81

NA
RP
4/4/81

| | | | | | | | |
|---|---|---|---|---|---|---|---|
| OFFICE | ORB#1:DL | ORB#1:DL | ORB#1:DL | AD:OR:DL | OELD | DL:D | |
| SURNAME | CParrish | DChaney;cf | SVarga | TNovak | | DGEisenhut | |
| DATE | 3/18/81 | 2/26/81 | 3/5/81 | 4/16/81 | 4/ /81 | 4/20/81 | |

Pochos

UNITED STATES
NUCLEAR REGULATORY COMMISSION
WASHINGTON, D. C. 20555

April 20, 1981

Docket No. 50-334

Mr. C. N. Dunn, Vice President
Operations Division
Duquesne Light Company
435 Sixth Avenue
Pittsburgh, Pennsylvania 15219

Dear Mr. Dunn:

SUBJECT: ORDER FOR MODIFICATION OF LICENSE CONCERNING PRIMARY COOLANT SYSTEM PRESSURE ISOLATION VALVES

This letter transmits an Order for Modification of License which revises the Technical Specifications for Facility Operating License No. DPR-66 for the Beaver Valley Power Station, Unit No. 1. The change is a result of the information you provided in response to our 10 CFR 50.54(f) letter of February 23, 1980, regarding primary coolant system pressure isolation valves. Based upon our review of your response, as well as other previously docketed information, we have concluded that a WASH-1400 Event V valve configuration exists at your facility and that corrective action as defined in the attached Order is necessary.

Attached to the Order for Modification of License is the Technical Evaluation Report (TER) which supports the Order; and the plant Technical Specifications which will ensure public health and safety over the operating life of your facility. We are aware that there may be editorial corrections to the attached TER. Please note that the Technical Specifications correctly delineate the requirements for your facility.

In addition to Event V valve configurations, we are continuing our efforts to review other configurations located at high pressure/low pressure system boundaries for their potential risk contribution to an intersystem LOCA. Therefore, further activity regarding the broader topic of intersystem LOCA's may be expected in the future.

A copy of the enclosed Order is being filed with the Office of the Federal Register for publication.

Sincerely,

Steven A. Varga, Chief
Operating Reactors Branch #1
Division of Licensing

Enclosure:
Order for Modification
of License

cc w/enclosure:
See next page

cc: Gerald Charnoff, Esquire
Jay E. Silberg, Esquire
Shaw, Pittman, Potts and Trowbridge
1800 M Street, N.W.
Washington, D. C. 20036

Karin Carter, Esquire
Special Assistant Attorney General
Bureau of Administrative Enforcement
5th Floor, Executive House
Harrisburg, Pennsylvania 17120

Mr. Roger Tapan
Stone and Webster Engineering Corporation
P. O. Box 2325
Boston, Massachusetts 02107

Mr. F. Noon
R & D Center
Westinghouse Electric Corporation
Building 7-303
Pittsburgh, Pennsylvania 15230

B. F. Jones Memorial Library
663 Franklin Avenue
Aliquippa, Pennsylvania 15001

Mr. John Carey, Director
Nuclear Operations
Duquesne Light Company
435 Sixth Avenue
Pittsburgh, Pennsylvania 15219

Mr. R. E. Martin
Duquesne Light Company
435 Sixth Avenue
Pittsburgh, Pennsylvania 15219

Marvin Fein
Utility Counsel
City of Pittsburgh
313 City-County Building
Pittsburgh, Pennsylvania 15219

Mr. James A. Werling
Plant Superintendent
Beaver Valley Power Station
P. O. Box 4
Shippingport, Pennsylvania 15077

Department of Environmental Resources
ATTN: Director, Office of Radiological Health
Post Office Box 2063
Harrisburg, Pennsylvania 17105

Mr. Thomas J. Czerpah
Mayor of the Burrough of Shippingport
P. O. Box 26
Shippingport, Pennsylvania 15077

Pennsylvania Power Company
Ray E. Semmler, President
One E. Washington Street
New Castle, Pennsylvania 16103

Ohio Environmental Protection Agency
Division of Planning
Environmental Assessment Section
P. O. Box 1049
Columbus, Ohio 43216

Office of the Governor
State of West Virginia
Charleston, West Virginia 25305

Mr. Carl Frasure
Committee of State Officials on Suggested State Legislation
Department of Political Science
West Virginia University
Morgantown, West Virginia 26505

Mr. C. N. Dunn
Duquesne Light Company

cc: Mr. Joseph H. Mills, Acting Commissioner
State of West Virginia Department
of Labor
1900 Washington Street
East Charleston, West Virginia 25305

N. H. Dyer, M.D.
State Director of Health
State Department of Health
State Office Building No. 1
1800 Washington Street, East
Charleston, West Virginia 25305

Director, Criteria and Standards Division
Office of Radiation Programs (ANR-460)
U. S. Environmental Protection Agency
Washington, D. C. 20460

U. S. Environmental Protection Agency
Region III Office
ATTN: EIS COORDINATOR
Curtis Building - 6th Floor
Philadelphia, Pennsylvania 19106

Governor's Office of State Planning
and Development
ATTN: Coordinator, Pennsylvania
State Clearinghouse
P. O. Box 1323
Harrisburg, Pennsylvania 17120

Mr. John A. Levin
Public Utility Commission
P. O. Box 3265
Harrisburg, Pennsylvania 17120

Mr. J. D. Sieber, Superintendent
of Licensing and Compliance
Duquesne Light Company
Post Office Box 4
Shippingport, Pennsylvania 15077

Irwin A. Popowsky, Esquire
Office of Consumer Advocate
1425 Strawberry Square
Harrisburg, Pennsylvania 17120

Mr. Charles E. Thomas, Esquire
Thomas and Thomas
212 Locust Street
Box 999
Harrisburg, Pennsylvania 17108

Resident Inspector
U. S. Nuclear Regulatory Commission
Post Office Box 298
Shippingport, Pennsylvania 15077

UNITED STATES OF AMERICA
NUCLEAR REGULATORY COMMISSION

| | | |
|---|---|---|
| In the Matter of<br>Duquesne Light Company<br>Ohio Edison Company<br>Pennsylvania Power Company<br>(Beaver Valley Power Station<br>Unit No. 1) | )<br>)<br>)<br>)<br>)<br>)<br>) | Docket No. 50-334 |

ORDER FOR MODIFICATION OF LICENSE

I

The Duquesne Light Company, Ohio Edison Company, and Pennsylvania Power Company (the licensees) hold Facility Operating License No. DPR-66, which authorizes the licensee to operate the Beaver Valley Power Station, Unit No. 1 at power levels not in excess of 2652 megawatts thermal rated power . The license was originally issued on January 30, 1976 and will expire on June 25, 2010. The facility, which is located at the licensee's site in Beaver County, Pennsylvania is a pressurized water reactor (PWR) used for the commercial generation of electricity.

II

The Reactor Safety Study (RSS), WASH-1400, identified in a PWR an inter-system loss of coolant accident (LOCA) which is a significant contributor to risk of core melt accidents (Event V). The design examined in the RSS contained in-series check valves isolating the high pressure Primary Coolant System (PCS) from the Low Pressure Injection System (LPIS) piping. The scenario which leads to the Event V accident is initiated by the failure of these check valves to function as a pressure isolation barrier. This causes an overpressurization and rupture of the LPIS low pressure piping which results in a LOCA that bypasses containment.

In order to better define the Event V concern, all light water reactor licensees were requested by letter dated February 23, 1980, to provide the following in accordance with 10 CFR 50.54(f):

1. Describe the valve configurations and indicate if an Event V isolation valve configuration exists within the Class I boundary of the high pressure piping connecting PCS piping to low pressure system piping; e.g., (1) two check valves in series, or (2) two check valves in series with a motor operated valve (MOV);
2. If either of the above Event V configurations exist, indicate whether continuous surveillance or periodic tests are being performed on such valves to ensure integrity. Also indicate whether valves have been known, or found, to lack integrity; and
3. If either of the above Event V configurations exist, indicate whether plant procedures should be revised or if plant modifications should be made to increase reliability.

In addition to the above, licensees were asked to perform individual check valve leak testing prior to plant startup after the next scheduled outage.

By letter dated March 17, 1980, the licensee responded to our February letter. Based upon the NRC review of this response as well as the review of previously docketed information for the facility, I have concluded in consonance with the attached Safety Evaluation (Attachment 1) that one or more valve configuration(s) of concern exist at the facility. The attached Technical Evaluation Report (TER) (Attachment 2) provides, in Section 4.0, a tabulation of the subject valves.

The staff's concern has been exacerbated due not only to the large number of plants which have an Event V configuration(s) but also because of recent unsatisfactory operating experience. Specifically, two plants have leak tested check valves with unsatisfactory results. At Davis-Besse, a pressure isolation check valve in the LPIS failed and the ensuing investigation found that valve internals had become disassembled. At the Sequoyah Nuclear Plant, two Residual Heat Removal (RHR) injection check valves and one RHR recirculation check valve failed because valves jammed open against valve over-travel limiters.

It is, therefore, apparent that when pressure isolation is provided by two in-series check valves and when failure of one valve in the pair can go undetected for a substantial length of time, verification of valve integrity is required. Since these valves are important to safety, they should be tested periodically to ensure low probability of gross failure. As a result, I have determined that periodic examination of check valves must be undertaken by the licensee as provided in Section III below to verify that each valve is seated properly and functioning as a pressure isolation device. Such testing will reduce the overall risk of an inter-system LOCA. The testing mandated by this Order may be accomplished by direct volumetric leakage measurement or by other equivalent means capable of demonstrating that leakage limits are not exceeded in accordance with Section 2.2 of the attached TER.

In view of the operating experiences described above and the potential consequences of check valve failure, I have determined that prompt action is necessary to increase the level of assurance that multiple pressure isolation barriers are in place and will remain intact. Therefore, the public health, safety and interest require that this modification of Facility Operating License No. DPR-66 be immediately effective.

III

Accordingly, pursuant to Section 161 i of the Atomic Energy Act of 1954, as amended, and the Commission's regulations in 10 CFR Parts 2 and 50, IT IS HEREBY ORDERED THAT EFFECTIVE IMMEDIATELY, Facility Operating License No. DPR-66 is modified by the addition of the following requirements:

1. Implement Technical Specifications (Attachment 3) which require periodic surveillance over the life of the plant and which specify limiting conditions for operation for PCS pressure isolation valves.
2. If check valves have not been (a) individually tested within 12 months preceding the date of the Order, and (b) found to comply with the leakage rate criteria set forth in the Technical Specifications described in Attachment 3, the MOV in each line shall be closed within 30 days of the effective date of this Order and quarterly Inservice Inspection (ISI) MOV cycling ceased until the check valve tests have been satisfactorily accomplished. (Prior to closing the MOV, procedures shall be implemented and operators trained to assure

that the MOV remains closed. Once closed, the MOV shall be tagged closed to further preclude inadvertent valve opening).

3. The MOV shall not be closed as indicated in paragraph 2 above unless a supporting safety evaluation has been prepared. If the MOV is in an emergency core cooling system (ECCS), the safety evaluation shall include a determination as to whether the requirements of 10 CFR 50.46 and Appendix K to 10 CFR Part 50 will continue to be satisfied with the MOV closed. If the MOV is not in an ECCS, the safety evaluation shall include a determination as to whether operation with the MOV closed presents an unreviewed safety question as defined in 10 CFR 50.59(a)(2). If the requirements of 10 CFR 50.46 and Appendix K have not been satisfied, or if an unreviewed safety question exists as defined in 10 CFR 50.59, then the facility shall be shut down within 30 days of the date of this Order and remain shutdown until check valves are satisfactorily tested in accordance with the Technical Specifications set forth in Attachment 3.

4. The records of the check valve tests required by this Order shall be made available for inspection by the NRC's Office of Inspection and Enforcement.

IV

The licensee or any other person who has an interest affected by this Order may request a hearing on this Order within 25 days of its publication in the Federal Register. A request for hearing shall be submitted to the Secretary, U.S. Nuclear Regulatory Commission, Washington, D.C. 20555. A copy of the request shall also be sent to the Executive Legal Director at the same address, and to Gerald Charnoff, Esquire, Jay E. Silberg, Esquire, Shaw, Pittman, Potts and Trowbridge, 1800 M Street, N.W., Washington, D.C., 20036, attorney for the licensee. If a hearing is requested by a person other than the licensee, that person shall describe, in accordance with 10 CFR 2.714(a)(2), the manner in which his or her interest is affected by this Order. ANY REQUEST FOR A HEARING SHALL NOT STAY THE IMMEDIATE EFFECTIVENESS OF THIS ORDER.

If a hearing is requested by the licensee or other person who has an interest affected by this Order, the Commission will issue an order designating the time and place of any such hearing. If a hearing is held, the issues to be considered at such a hearing shall be:

(a) Whether the licensee should be required to individually leak test check valves in accordance with the Technical Specifications set forth in Attachment 3 to this Order.

(b) Whether the actions required by Paragraphs 2 and 3 of Section III of this Order must be taken if check valves have not been tested within 12 months preceding the date of this order.

Operation of the facility on terms consistent with this Order is not stayed by the pendency of any proceedings on this Order. In the event that a need for further action becomes apparent, either in the course of proceedings on this Order or any other time, the Director will take appropriate action.

FOR THE NUCLEAR REGULATORY COMMISSION

Darrell G. Eisenhut, Director
Division of Licensing

Effective Date: April 20, 1981
Bethesda, Maryland

Attachments:
1. Safety Evaluation Report
2. Technical Evaluation Report
3. Technical Specifications

UNITED STATES
NUCLEAR REGULATORY COMMISSION
WASHINGTON, D. C. 20555

Attachment 1

# SAFETY EVALUATION REPORT
# BEAVER VALLEY POWER STATION, UNIT NO. 1
# PRIMARY COOLANT SYSTEM PRESSURE ISOLATION VALVES
# (WASH-1400, EVENT V)

## 1.0 Introduction

The Reactor Safety Study (RSS), WASH-1400, identified in a PWR an intersystem loss of coolant accident (LOCA) which is a significant contributor to risk of core melt accidents (Event V). The design examined in the RSS contained in-series check valves isolating the high pressure Primary Coolant System (PCS) from the Low Pressure Injection System (LPIS) piping. The scenario which leads to the Event V accident is initiated by the failure of these check valves to function as a pressure isolation barrier. This causes an overpressurization and rupture of the LPIS low pressure piping which results in a LOCA that bypasses containment.

In order to better define the Event V concern, all light water reactor licensees were requested by 10 CFR 50.54(f) letter, dated February 23, 1980, to identify valve configurations of concern and prior valve test results, if any. By letter dated March 17, 1980, the licensee responded to our request and this information was subsequently transmitted to our contractor, the Franklin Research Center, for verification that the licensee had correctly identified the subject valve configurations.

## 2.0 Evaluation

In order to prepare the Technical Evaluation Report (TER) it was necessary that the contractor verify and evaluate the licensee's response to our February 1980 letter. The NRC acceptance criteria used by Franklin were based on WASH-1400 findings, probabilistic analyses and appropriate Standard Review Plan requirements. With respect to the verification of the licensee's response to our information request, the Franklin evaluation was based on FSAR information, ISI/IST site visit data, and other previously docketed information. The attached Franklin TER correctly identifies the subject valve configurations.

## 3.0 Conclusion

Based on our review of the Franklin TER, we find that the valve configurations of concern have been correctly identified. Since periodic testing of these PCS pressure isolation valves will reduce the probability of an intersystem LOCA we, therefore, conclude that the requirement to test these valves should be incorporated into the plant's Technical Specifications.

Dated: April 20, 1981

ATTACHMENT 2

THIS REPORT SUPERSEDES ISSUE OF AUGUST 22, 1980

TECHNICAL EVALUATION REPORT

# PRIMARY COOLANT SYSTEM PRESSURE ISOLATION VALVES

DUQUESNE LIGHT COMPANY
BEAVER VALLEY UNIT 1

NRC DOCKET NO. 50-344

NRC TAC NO. 12922

NRC CONTRACT NO. NRC-03-79-118

FRC PROJECT C5257

FRC TASK 255


*Prepared by*

Franklin Research Center
The Parkway at Twentieth Street
Philadelphia, PA 19103

Author: P. N. Noell
T. C. Stilwell
FRC Group Leader: P. N. Noell


*Prepared for*

Nuclear Regulatory Commission
Washington, D.C. 20555

Lead NRC Engineer: P. J. Polk

October 24, 1980


This report was prepared as an account of work sponsored by an agency of the United States Government. Neither the United States Government nor any agency thereof, or any of their employees, makes any warranty, expressed or implied, or assumes any legal liability or responsibility for any third party's use, or the results of such use, of any information, apparatus, product or process disclosed in this report, or represents that its use by such third party would not infringe privately owned rights.



Franklin Research Center
A Division of The Franklin Institute
The Benjamin Franklin Parkway, Phila., Pa. 19103 (215) 448-1000

## 1.0 INTRODUCTION

The NRC has determined that certain isolation valve configurations in systems connecting the high-pressure Primary Coolant System (PCS) to lower-pressure systems extending outside containment are potentially significant contributors to an intersystem loss-of-coolant accident (LOCA). Such configurations have been found to represent a significant factor in the risk computed for core melt accidents.

The sequence of events leading to the core melt is initiated by the concurrent failure of two in-series check valves to function as a pressure isolation barrier between the high-pressure PCS and a lower-pressure system extending beyond containment. This failure can cause an overpressurization and rupture of the low-pressure system, resulting in a LOCA that bypasses containment.

The NRC has determined that the probability of failure of these check valves as a pressure isolation barrier can be significantly reduced if the pressure at each valve is continuously monitored, or if each valve is periodically inspected by leakage testing, ultrasonic examination, or radiographic inspection. The NRC has established a program to provide increased assurance that such multiple isolation barriers are in place in all operating Light Water Reactor plants designated by DOR Generic Implementation Activity B-45.

In a generic letter of February 23, 1980, the NRC requested all licensees to identify the following valve configurations which may exist in any of their plant systems communicating with the PCS: 1) two check valves in series or 2) two check valves in series with a motor-operated valve (MOV).

For plants in which valve configurations of concern are found to exist, licensees were further requested to indicate: 1) whether, to ensure integrity of the various pressure isolation check valves, continuous surveillance or periodic testing was currently being conducted, 2) whether any check valves of concern were known to lack integrity, and 3) whether plant procedures should be revised or plant modifications be made to increase reliability.

Franklin Research Center (FRC) was requested by the NRC to provide technical assistance to NRC's B-45 activity by reviewing each licensee's submittal

against criteria provided by the NRC and by verifying the licensee's reported findings from plant system drawings. This report documents FRC's technical review.

## 2.0 CRITERIA

### 2.1 Identification Criteria

For a piping system to have a valve configuration of concern, the following five items must be fulfilled:

1) The high-pressure system must be connected to the Primary Coolant System;

2) there must be a high-pressure/low-pressure interface present in the line;

3) this same piping must eventually lead outside containment;

4) the line must have one of the valve configurations shown in Figure 1; and

5) the pipe line must have a diameter greater than 1 inch.

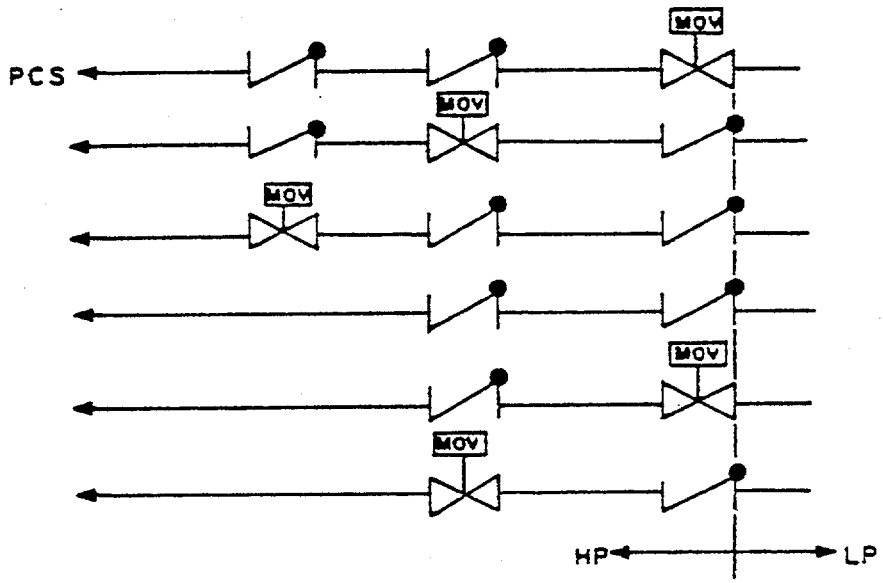


Figure 1. Valve Configurations Designated by the NRC To Be Included in This Technical Evaluation

## 2.2 Periodic Testing Criteria

For licensees whose plants have valve configurations of concern and choose to institute periodic valve leakage testing, the NRC has established criteria for frequency of testing, test conditions, and acceptable leakage rates. These criteria may be summarized as follows:

### 2.2.1 Frequency of Testing

Periodic hydrostatic leakage testing* on each check valve shall be accomplished every time the plant is placed in the cold shutdown condition for refueling, each time the plant is placed in a cold shutdown condition for 72 hours if testing has not been accomplished in the preceding 9 months, each time any check valve may have moved from the fully closed position (i.e., any time the differen- tial pressure across the valve is less than 100 psig), and prior to returning the valve to service after maintenance, repair, or replacement work is performed.

### 2.2.2 Hydrostatic Pressure Criteria

Leakage tests involving pressure differentials lower than function pressure differentials are permitted in those types of valves in which service pressure will tend to diminish the overall leakage channel opening, as by pressing the disk into or onto the seat with greater force. Gate valves, check valves, and globe-type valves, having function pressure differential applied over the seat, are examples of valve applications satisfying this requirement. When leakage tests are made in such cases using pressures lower than function maximum pressure differential, the observed leakage shall be adjusted to function maximum pressure differential value. This adjustment shall be made by calculation appropriate to the test media and the ratio between test and function pressure differential, assuming leakage to be directly proportional to the pressure differential to the one-half power.

### 2.2.3 Acceptable Leakage Rates:

- Leakage rates less than or equal to 1.0 gpm are considered acceptable.
- Leakage rates greater than 1.0 gpm but less than or equal to 5.0 gpm are considered acceptable if the latest measured rate has not exceeded the rate determined by the previous test by an amount

*To satisfy ALARA requirements, leakage may be measured indirectly (as from the performance of pressure indicators) if accomplished in accordance with approved procedures and supported by computations showing that the method is capable of demonstrating valve compliance with the leakage criteria.

that reduces the margin between measured leakage rate and the maximum permissible rate of 5.0 gpm by 50% or greater.

- Leakage rates greater than 1.0 gpm but less than or equal to 5.0 gpm are considered unacceptable if the latest measured rate exceeded the rate determined by the previous test by an amount that reduces the margin between measured leakage rate and the maximum permissible rate of 5.0 gpm by 50% or greater.
- Leakage rates greater than 5.0 gpm are considered unacceptable.

## 3.0 TECHNICAL EVALUATION

### 3.1 Licensee's Response to the Generic Letter

In response to the NRC's generic letter [Ref. 1], the Duquesne Light Company (DLC) indicated [Ref. 2] that, having reviewed all plant systems to determine the existence of a valve configuration of concern, the Safety Injection System (low-pressure) is the only system at Beaver Valley Unit 1 which contains such a valve configuration of concern.

The Licensee also stated, "At the present time, three of the check valves (1SI-10, 11, and 12) and the motor-operated valve (MOV-SI-890C) are required to be leak tested at 18 month intervals in accordance with the in- service inspection requirements contained in the ASME Boiler and Pressure Vessel Code, Section XI. The other check valves shown on Figure 1 are not required to be leak tested. None of these valves are continuously monitored for leakage."

It is FRC's understanding that, with DLC's concurrence, the NRC will direct DLC to change its Plant Technical Specifications as necessary to ensure that periodic leakage testing (or equivalent testing) is conducted in accordance with the criteria of Section 2.2.

### 3.2 FRC Review of Licensee's Response

FRC has reviewed the licensee's response against the plant-specific Piping and Instrumentation Diagrams (P&IDs) [Ref. 3] that might have the valve configurations of concern.

FRC has also reviewed the efficacy of instituting periodic testing for the check valves involved in this particular application with respect to the re-

duction of the probability of an intersystem LOCA in the Low-Pressure Safety Injection System pipe lines.

In its review of the P&IDs [Ref. 3] for Beaver Valley Unit 1, FRC found the following piping system to be of concern:

> The Low-Pressure Safety Injection System (LPSIS) is connected to the cold-leg side of each of the three Primary Coolant System loops. Each cold-leg segment of the LPSIS has two check valves leading away from the reactor vessel with all three segments joining together and then leading outside containment to a single, normally closed, motor-operated valve (MOV). The high-pressure/lowpressure interface is on the upstream side of the MOV. These valves are listed below in accordance with valve designations used in DPL's response [Ref. 2].

Low-Pressure Safety Injection System

<u>Loop 1, cold leg</u>

high-pressure check valve, 1SI-23
high-pressure check valve, 1SI-12
high-pressure MOV, SI-890C, normally open (n.o.)

<u>Loop 2, cold leg</u>

high-pressure check valve, 1SI-24
high-pressure check valve, 1SI-11
high-pressure MOV, SI-890C, n.o.

<u>Loop 3, cold leg</u>

high-pressure check valve, 1SI-25
high-pressure check valve, 1SI-10
high-pressure MOV, SI-890C, n.o.

In accordance with the criteria of Section 2.0, FRC found no other valve configurations of concern existing in this plant. These findings confirm the licensee's response [Ref. 2].

FRC reviewed the effectiveness of instituting periodic leakage testing of the check valves in these lines as a means of reducing the probability of an intersystem LOCA occurring. FRC found that introducing a program of check

valve leakage testing in accordance with the criteria summarized in Section 2.0 will be an effective measure in substantially reducing the probability of an intersystem LOCA occurring in these lines and a means of increasing the probability that these lines will be able to perform their safety-related functions. It is also a step toward achieving a corresponding reduction in the plant probability of an intersystem LOCA in Beaver Valley Unit 1.

## 4.0 CONCLUSION

Beaver Valley Unit 1 has been determined to have valves in one of the configurations of concern in all three of the cold-loop leg segments of the Low-Pressure Safety Injection System.

If DLC modifies the Plant Technical Specification for Beaver Valley Unit 1 to incorporate periodic testing (as delineated in Section 2.2) for the check valves itemized in Table 1.0, then FRC considers this an acceptable means of achieving plant compliance with the NRC staff objectives of Reference 1.

Table 1.0

Primary Coolant System Pressure Isolation Valves

| System | Check Valve No. | Allowable Leakage* |
|---|---|---|
| Low-Pressure Safety Injection | | |
| Loop 1, cold-leg | 1SI-23<br>1SI-12 | |
| Loop 2, cold-leg | 1SI-24<br>1SI-11 | |
| Loop 3, cold-leg | 1SI-25<br>1SI-10 | |

## 5.0 REFERENCES

[1]. Generic NRC letter, dated 2/23/80, from Mr. D. G. Eisenhut, Department of Operating Reactors (DOR), to Mr. C. N. Dunn, Duquesne Light Company (DLC).

*To be provided by licensee at a future date in accordance with Section 2.2.3.

[2]. Duquesne Light Company's response to NRC's letter, dated 3/17/80, from Mr. C. N. Dunn (DLC) to Mr. D. G. Eisenhut (DOR).

[3]. List of examined P&IDs:

Stone & Webster Drawings:

11700-RM-37A-12

11700-RM-41A-13

11700-RM-41B-13

11700-RM-155A-6

11700-RM-155B-6

11700-RM-156A-6

11700-RM-159A-6

11700-RM-155B-7

11700-RM-167A-4

11700-RM-167P-4

# TECHNICAL SPECIFICATION CHANGES

| Remove Pages | Insert Pages |
|---|---|
| V | V |
| ---------- | 3/4 4-14a |
| ---------- | 3/4 4-14b |
| ---------- | 3/4 4-14c |

INDEX

LIMITING CONDITIONS FOR OPERATION AND SURVEILLANCE REQUIREMENTS


| SECTION | | Page |
|---|---|---|
| 3/4.4.2 | SAFETY VALVES - SHUTDOWN | 3/4 4-5 |
| 3/4.4.3 | SAFETY VALVES - OPERATING | 3/4 4-6 |
| 3/4.4.4 | PRESSURIZER | 3/4 4-7 |
| 3/4.4.5 | STEAM GENERATORS | 3/4 4-8 |
| 3/4.4.6 | REACTOR COOLANT SYSTEM LEAKAGE | |
| | Leakage Detection Systems | 3/4 4-11 |
| | Operational Leakage | 3/4 4-13 |
| | Pressure Isolation Valves | 3/4 4-14a |
| 3/4.4.7 | CHEMISTRY | 3/4 4-15 |
| 3/4.4.8 | SPECIFIC ACTIVITY | 3/4 4-18 |
| 3/4.4.9 | PRESSURE/TEMPERATURE LIMITS | |
| | Reactor Coolant System | 3/4 4-22 |
| | Pressurizer | 3/4 4-27 |
| 3/4.4.10 | STRUCTURAL INTEGRITY | |
| | ASME Code Class 1, 2 and 3 Components | 3/4 4-28 |
| 3/4.5 | EMERGENCY CORE COOLING SYSTEMS (ECCS) | |
| 3/4.5.1 | ACCUMULATORS | 3/4 5-1 |
| 3/4.5.2 | ECCS SUBSYSTEMS - $T_{avg} \geq 350°F$ | 3/4 5-3 |
| 3/4.5.3 | ECCS SUBSYSTEMS - $T_{avg} < 350°F$ | 3/4 5-6 |
| 3/4.5.4 | BORON INJECTION SYSTEM | |
| | Boron Injection Tank | 3/4 5-7 |
| | Heat Tracing | 3/4 5-8 |
| 3/4.5.5 | REFUELING WATER STORAGE TANK | 3/4 5-9 |

REACTOR COOLANT SYSTEM

PRESSURE ISOLATION VALVES

LIMITING CONDITION FOR OPERATION

3.4.6.3 Reactor coolant system pressure isolation valves shall be operational.

APPLICABILITY Modes 1,2, 3 and 4.

Action:

1. All pressure isolation valves listed in Table 4.4-3 shall be functional as a pressure isolation device, except as specified in 2. Valve leakage shall not exceed the amounts indicated.

2. In the event that integrity of any pressure isolation valve specified in Table 4.4-3 cannot be demonstrated, reactor operation may continue, provided that at least two valves in each high pressure line having a non-functional valve are in, and remain in, the mode corresponding to the isolated condition.[a]

3. If Specification 1 and 2 cannot be met, an orderly shutdown shall be initiated and the reactor shall be in the cold shutdown condition within 24 hours.

4. The provision of specification 4.0.4 is not applicable for entry into Mode 3 or 4.

[a] Motor operated valves shall be placed in the closed position and power supplies deenergized.

SURVEILLANCE REQUIREMENT

4.4.6.3.1 Periodic leakage testing[a] on each valve listed in Table 4.4-3 shall be accomplished prior to entering operational condition 1 after every time the plant is placed in the cold shutdown condition for refueling, after each time the plant is placed in a cold shutdown condition for 72 hours if testing has not been accomplished in the preceeding 9 months, and prior to returning the valve to service after maintenance, repair or replacement work is performed.

4.4.6.3.2 Whenever integrity of a pressure isolation valve listed in Table 4.4-3 cannot be demonstrated the integrity of the remaining valve in each high pressure line having a leaking valve shall be determined and recorded daily. In addition, the position of the other closed valve located in the high pressure piping shall be recorded daily.

[a] To satisfy ALARA requirements, leakage may be measured indirectly (as from the performance of pressure indicators) if accomplished in accordance with approved procedures and supported by computations showing that the method is capable of demonstrating valve compliance with the leakage criteria.

## TABLE 4.4-3

## REACTOR COOLANT SYSTEM PRESSURE ISOLATION VALVES

| System | Valve No. | Maximum[a][b] Allowable Leakage |
|---|---|---|
| Loop 1, cold leg | SI-23 | ≤ 5.0 GPM |
| | SI-12 | ≤ 5.0 GPM |
| Loop 2, cold leg | SI-24 | ≤ 5.0 GPM |
| | SI-11 | ≤ 5.0 GPM |
| Loop 3, cold leg | SI-25 | ≤ 5.0 GPM |
| | SI-10 | ≤ 5.0 GPM |

(a) 1. Leakage rates less than or equal to 1.0 gpm are considered acceptable.

2. Leakage rates greater than 1.0 gpm but less than or equal to 5.0 gpm are considered acceptable if the latest measured rate has not exceeded the rate determined by the previous test by an amount that reduces the margin between measured leakage rate and the maximum permissible rate of 5.0 gpm by 50% or greater.

3. Leakage rates greater than 1.0 gpm but less than or equal to 5.0 gpm are considered unacceptable if the latest measured rate exceeded the rate determined by the previous test by an amount that reduces the margin between measured leakage rate and the maximum permissible rate of 5.0 gpm by 50% or greater.

4. Leakage rates greater than 5.0 gpm are considered unacceptable.

(b) Minimum test differential pressure shall not be less that 150 psid.