DOCKET FILE 50-334

REGULATORY DOCKET FILE COPY

Docket No. 50-334

AUG 29 1980

Mr. C. N. Dunn, Vice President
Operations Division
Duquesne Light Company
435 Sixth Avenue
Pittsburgh, Pennsylvania 15219

Dear Mr. Dunn:

The Commission has issued the enclosed Amendment No. 28 to Facility Operating License No. DPR-66 for the Beaver Valley Nuclear Power Station, Unit No. 1. The amendment consists of changes to the Technical Specifications in response to your application transmitted by letters dated November 17, 1977, May 16, August 3, September 11 and October 24, 1978, September 28 and October 18, 1979, February 27, July 3, August 6 and 11, 1980.

The amendment revises the Technical Specifications to reflect changes as a result of modifications made to alleviate Net Positive Suction Head (NPSH) problems with the Low Head Safety Injection and Recirculation Spray Pumps. This amendment also constitutes completion of actions required of the licensee by the "Order for Modification of License" dated September 30, 1977; that Order is therefore terminated.

Copies of the Safety Evaluation and the Notice of Issuance are also enclosed.

Sincerely,

Original signed by
Darrell G. Eisenhut

Darrell G. Eisenhut, Director
Division of Licensing

Enclosures:
1. Amendment No. 28 to DPR-66
2. Safety Evaluation
3. Notice of Issuance

cc: w/enclosures
See next page

8009190589

OFFICE						
SURNAME						
DATE						

Distribution

Docket File 50-334	J. Olshinski
NRC PDR	J. Heltemes
Local PDR	D. Wigginton
TERA	W. Ross
NSIC	C. Parrish
NRR Reading	I&E (5)
ORB1 Reading	Attorney, OELD
H. Denton	ACRS (16)
D. Eisenhut	B. Jones (4)
T. Novak	B. Scharf (10)
R. Tedesco	C. Miles
G. Lainas	R. Diggs
S. Varga	C. Stephens

Signed 8/27/80

Concur in amdmt form of amdmt and FR notice only subject to changes in attached note

OFFICE	DL:ORB1	DL:ORB1	DL:ORB1	DL:ORB1	DL:AD:OR	OELD
SURNAME	DWigginton:jb	WJRoss	CSParrish	SAVarga	TMNovak	S. Scharf
DATE	08/18/80	08/ /80	08/19/80	08/19/80	08/25/80	08/22/80

#14 48320 4987

Docket No. 50-334

Mr. C. N. Dunn, Vice President
Operations Division
Duquesne Light Company
435 Sixth Avenue
Pittsburgh, Pennsylvania 15219

Dear Mr. Dunn:

The Commission has issued the enclosed Amendment No. to Facility Operating License No. DPR-66 for the Beaver Valley Nuclear Power Station, Unit No. 1. The amendment consists of changes to the Technical Specifications in response to your application transmitted by letters dated November 17, 1977, May 16, August 3, September 11 and October 24, 1978, September 28 and October 18, 1979, February 27, July 3, August 6 and 11, 1980.

The amendment revises the Technical Specifications to reflect changes as a result of modifications made to alleviate Net Positive Suction Head (NPSH) problems with the Low Head Safety Injection and Recirculation Spray Pumps. The amendment also terminates the related Order for Modification of License dated September 30, 1977.

Copies of the Safety Evaluation and the Notice of Issuance are also enclosed.

Sincerely,

Steven A. Varga, Chief
Operating Reactors Branch #1
Division of Licensing

Enclosures:
1. Amendment No. to DPR-66
2. Safety Evaluation
3. Notice of Issuance

cc: w/enclosures
See next page

retyped 8/22/80 per Ada

OFFICE ▶						
SURNAME ▶						
DATE ▶						

DOCKET FILE 50-334

REGULATORY DOCKET FILE COPY

Docket No. 50-334

AUG 29 1980

Mr. C. N. Dunn, Vice President
Operations Division
Duquesne Light Company
435 Sixth Avenue
Pittsburgh, Pennsylvania 15219

Dear Mr. Dunn:

The Commission has issued the enclosed Amendment No. 28 to Facility Operating License No. DPR-66 for the Beaver Valley Nuclear Power Station, Unit No. 1. The amendment consists of changes to the Technical Specifications in response to your application transmitted by letters dated November 17, 1977, May 16, August 3, September 11 and October 24, 1978, September 28 and October 18, 1979, February 27, July 3, August 6 and 11, 1980.

The amendment revises the Technical Specifications to reflect changes as a result of modifications made to alleviate Net Positive Suction Head (NPSH) problems with the Low Head Safety Injection and Recirculation Spray Pumps. This amendment also constitutes completion of actions required of the licensee by the "Order for Modification of License" dated September 30, 1977; that Order is therefore terminated.

Copies of the Safety Evaluation and the Notice of Issuance are also enclosed.

Sincerely,

Original signed by
Darrell G. Eisenhut

Darrell G. Eisenhut, Director
Division of Licensing

Enclosures:
1. Amendment No. 28 to DPR-66
2. Safety Evaluation
3. Notice of Issuance

cc: w/enclosures
See next page

Distribution

Docket File 50-334	J. Olshinski
NRC PDR	J. Heltemes
Local PDR	D. Wigginton
TERA	W. Ross
NSIC	C. Parrish
NRR Reading	I&E (5)
ORB1 Reading	Attorney, OELD
H. Denton	ACRS (16)
D. Eisenhut	B. Jones (4)
T. Novak	B. Scharf (10)
R. Tedesco	C. Miles
G. Lainas	R. Diggs
S. Varga	C. Stephens

Concur in part form of amendment and notice only subject to changes in attached note

OFFICE	DL:ORB1	~~DL:ORB1~~	DL:ORB1	DL:ORB1	~~DL:AD:OR~~	OELD
SURNAME	DWigginton:jb	~~WJRoss~~	CSParrish	SAVarga	TMNovak	
DATE	08/18/80	~~08/ /80~~	08/19/80	08/19/80	08/25/80	08/22/80

#14 40320 4981

NRC FORM 318 (9-76) NRCM 0240 ☆U.S. GOVERNMENT PRINTING OFFICE: 1979-289-369

Docket No. 50-334

Mr. C. N. Dunn, Vice President
Operations Division
Duquesne Light Company
435 Sixth Avenue
Pittsburgh, Pennsylvania 15219

Dear Mr. Dunn:

The Commission has issued the enclosed Amendment No. to Facility Operating License No. DPR-66 for the Beaver Valley Nuclear Power Station, Unit No. 1. The amendment consists of changes to the Technical Specifications in response to your application transmitted by letters dated November 17, 1977, May 16, August 3, September 11 and October 24, 1978, September 28 and October 18, 1979, February 27, July 3, August 6 and 11, 1980.

The amendment revises the Technical Specifications to reflect changes as a result of modifications made to alleviate Net Positive Suction Head (NPSH) problems with the Low Head Safety Injection and Recirculation Spray Pumps. The amendment also terminates the related Order for Modification of License dated September 30, 1977.

Copies of the Safety Evaluation and the Notice of Issuance are also enclosed.

Sincerely,

Steven A. Varga, Chief
Operating Reactors Branch #1
Division of Licensing

Enclosures:
1. Amendment No. to DPR-66
2. Safety Evaluation
3. Notice of Issuance

cc: w/enclosures
See next page

retyped 8/22/80 per Calds

OFFICE ▶						
SURNAME ▶						
DATE ▶						

UNITED STATES
NUCLEAR REGULATORY COMMISSION
WASHINGTON, D. C. 20555

August 27, 1980

Docket No. 50-334

Mr. C. N. Dunn, Vice President
Operations Division
Duquesne Light Company
435 Sixth Avenue
Pittsburgh, Pennsylvania 15219

Dear Mr. Dunn:

The Commission has issued the enclosed Amendment No. 28 to Facility Operating License No. DPR-66 for the Beaver Valley Nuclear Power Station, Unit No. 1. The amendment consists of changes to the Technical Specifications in response to your application transmitted by letters dated November 17, 1977, May 16, August 3, September 11 and October 24, 1978, September 28 and October 18, 1979, February 27, July 3, August 6 and 11, 1980.

The amendment revises the Technical Specifications to reflect changes as a result of modifications made to alleviate Net Positive Suction Head (NPSH) problems with the Low Head Safety Injection and Recirculation Spray Pumps. This amendment also constitutes completion of actions required of the licensee by the "Order for Modification of License" dated September 30, 1977; that Order is therefore terminated.

Copies of the Safety Evaluation and the Notice of Issuance are also enclosed.

Sincerely,

Darrell G. Eisenhut, Director
Division of Licensing

Enclosures:
1. Amendment No. 28 to DPR-66
2. Safety Evaluation
3. Notice of Issuance

cc: w/enclosures
See next page

cc: Mr. Joseph H. Mills, Acting Commissioner
State of West Virginia Department
of Labor
1900 Washington Street
East Charleston, West Virginia 25305

N. H. Dyer, M.D.
State Director of Health
State Department of Health
State Office Building No. 1
1800 Washington Street, East
Charleston, West Virginia 25305

Director, Technical Assessment Division
Office of Radiation programs (AW-459)
U. S. Environmental Protection Agency
Crystal Mall #2
Arlington, Virginia 20460

U. S. Environmental Protection Agency
Region III Office
ATTN: EIS COORDINATOR
Curtis Building - 6th Floor
Philadelphia, Pennsylvania 19106

Governor's Office of State Planning
and Development
ATTN: Coordinator, Pennsylvania
State Clearinghouse
P. O. Box 1323
Harrisburg, Pennsylvania 17120

Mr. John A. Levin
Public Utility Commission
P. O. Box 3265
Harrisburg, Pennsylvania 17120

Mr. J. D. Sieber, Superintendent
of Licensing and Compliance
Duquesne Light Company
Post Office Box 4
Shippingport, Pennsylvania 15077

Irwin A. Popowsky, Esquire
Office of Consumer Advocate
1425 Strawberry Square
Harrisburg, Pennsylvania 17120

Mr. Charles E. Thomas, Esquire
Thomas and Thomas
212 Locust Street
Box 999
Harrisburg, Pennsylvania 17108

UNITED STATES
NUCLEAR REGULATORY COMMISSION
WASHINGTON, D. C. 20555

DUQUESNE LIGHT COMPANY

OHIO EDISON COMPANY

PENNSYLVANIA POWER COMPANY

DOCKET NO. 50-334

BEAVER VALLEY POWER STATION, UNIT NO. 1

AMENDMENT TO FACILITY OPERATING LICENSE

Amendment No. 28
License No. DPR-66

1. The Nuclear Regulatory Commission (the Commission) has found that:

   A. The applications for amendment by Duquesne Light Company, Ohio Edison Company, and Pennsylvania Power Company (the licensees) dated November 17, 1977, May 16, August 3, September 11 and October 24, 1978, September 28 and October 18, 1979, February 27, July 3, August 6 and August 11, 1980 comply with the standards and requirements of the Atomic Energy Act of 1954, as amended (the Act) and the Commission's rules and regulations set forth in 10 CFR Chapter I;

   B. The facility will operate in conformity with the applications, the provisions of the Act, and the rules and regulations of the Commission;

   C. There is reasonable assurance (i) that the activities authorized by this amendment can be conducted without endangering the health and safety of the public, and (ii) that such activities will be conducted in compliance with the Commission's regulations;

   D. The issuance of this amendment will not be inimical to the common defense and security or to the health and safety of the public; and

   E. The issuance of this amendment is in accordance with 10 CFR Part 51 of the Commission's regulations and all applicable requirements have been satisfied.

8009190596

2. Accordingly, the license is amended by changes to the Technical Specifications as indicated in the attachment to this license amendment, and paragraph 2.C.(2) of Facility Operating License No. DPR-66 is hereby amended to read as follows:

   (2) Technical Specifications

   The Technical Specifications contained in Appendices A and B, as revised through Amendment No. 28 , are hereby incorporated in the license. The licensee shall operate the facility in accordance with the Technical Specifications.

3. This license amendment is effective as of the date of its issuance.

FOR THE NUCLEAR REGULATORY COMMISSION

for Marshall Grotenhuis

Steven A. Varga, Chief
Operating Reactors Branch #1
Division of Licensing

Attachment:
Changes to the Technical
Specifications

Date of Issuance: August 27, 1980

ATTACHMENT TO LICENSE AMENDMENT

AMENDMENT NO. 28 TO FACILITY OPERATING LICENSE NO. DPR-66

DOCKET NO. 50-334

Revise Appendix A as follows:

Remove Pages	Insert Pages
3/4 1-16	3/4 1-16
3/4 3-16a	3/4 1-16a
3/4 3-22a	3/4 3-22a
3/4 3-29a	3/4 3-29a
3/4 5-9	3/4 5-9
3/4 6-11	3/4 6-11
3/4 6-15	3/4 6-15
3/4 6-16	3/4 6-16
B 3/4 1-2	B 3/4 1-2

BORATED WATER SOURCES - OPERATING

LIMITING CONDITION FOR OPERATION

3.1.2.8 Each of the following borated water sources shall be OPERABLE:

a. A boric acid storage system with:

1. A minimum contained volume of 11,336 gallons,
2. Between 7000 and 7700 ppm of boron, and
3. A minimum solution temperature of 65°F.

b. The refueling water storage tank with:

1. A minimum contained volume of 439,050 gallons of water,
2. A minimum boron concentration of 2000 ppm, and
3. A minimum solution temperature of 43°F.

APPLICABILITY: MODES 1, 2, 3 and 4.

ACTION:

a. With the boric acid storage system inoperable, restore the storage system to OPERABLE status within 72 hours or be in at least HOT STANDBY and borated to a SHUTDOWN MARGIN equivalent to at least 1% $\Delta k/k$ at 200°F within the next 6 hours; restore the boric acid storage system to OPERABLE status within the next 7 days or be in COLD SHUTDOWN within the next 30 hours.

b. With the refueling water storage tank inoperable, restore the tank to OPERABLE status within one hour or be in at least HOT STANDBY within the next 6 hours and in COLD SHUTDOWN within the following 30 hours.

SURVEILLANCE REQUIREMENTS

4.1.2.8 Each borated water source shall be demonstrated OPERABLE:

TABLE 3.3-3 (Continued)

ENGINEERED SAFETY FEATURE ACTUATION SYSTEM INSTRUMENTATION

FUNCTIONAL UNIT	TOTAL NO. OF CHANNELS	CHANNELS TO TRIP	MINIMUM CHANNELS OPERABLE	APPLICABLE MODES	ACTION
1.1 SAFETY INJECTION-TRANSFER FROM INJECTION TO THE RE-CIRCULATION MODE					
a. Manual Initiation	2 sets 2 switches/set	1 set	2 sets	1, 2, 3, 4	18
b. Automatic Actuation Logic Coincident with Safety Injection Signal	2	1	2	1, 2, 3	18
c. Refueling Water Storage Tank Level-Low	4	2	3	1, 2, 3	16
d. Refueling Water Storage Tank Level - Auto QS Flow Reduction	1 per train	1 per train	1 per train	1, 2, 3	18

TABLE 3.3-4 (Continued)

ENGINEERED SAFETY FEATURE ACTUATION SYSTEM INSTRUMENTATION TRIP SETPOINTS

FUNCTIONAL UNIT	TRIP SETPOINT	ALLOWABLE VALUES
1.1 SAFETY INJECTION-TRANSFER FROM INJECTION TO THE RECIRCULATION MODE		
a. Manual Initiation	Not Applicable	Not Applicable
b. Automatic Actuation Logic Coincident with Safety Injection Signal	Not Applicable	Not Applicable
c. Refueling Water Storage Tank Level-Low	19'2-1/2" ± 0'6"	19'2-1/2" ± 1'0"
d. Refueling Water Storage Tank Level - Auto QS Flow Reduction	11'0" ± 3"	11'0" ± 6"

TABLE 4.3-2 (Continued)

ENGINEERED SAFETY FEATURE ACTUATION SYSTEM INSTRUMENTATION
SURVEILLANCE REQUIREMENTS

FUNCTIONAL UNIT	CHANNEL CHECK	CHANNEL CALIBRATION	CHANNEL FUNCTIONAL TEST	MODES IN WHICH SURVEILLANCE REQUIRED
1.1. SAFETY INJECTION-TRANSFER FROM INJECTION TO THE RE-RECIRCULATION MODE				
a. Manual Initation	N.A.	N.A.	M (1)	1, 2, 3, 4
b. Automatic Actuation Logic Coincident with Safety Injection Signal	N.A.	N.A.	M (2)	1, 2, 3
c. Refueling Water Storage Tank Level-Low	S	R	M	1, 2, 3
d. Refueling Water Storage Tank Level - Auto QS Flow Reduction	S	R	M	1, 2, 3
2. CONTAINMENT SPRAY				
a. Manual Initiation	N.A.	N.A.	M (1)	1, 2, 3, 4
b. Automatic Actuation Logic	N.A.	N.A.	M (2)	1, 2, 3, 4
c. Contain Pressure-High-High	S	R	M	1, 2, 3

REFUELING WATER STORAGE TANK

LIMITING CONDITION FOR OPERATION

3.5.5 The refueling water storage tank shall be OPERABLE with:

a. A contained volume of between 439,050 and 441,100 gallons of borated water.

b. A boron concentration of between 2000 and 2100 ppm, and

c. A minimum water temperature of 43°F.

APPLICABILITY: MODES 1, 2, 3 and 4.

ACTION:

With the refueling water storage tank inoperable, restore the tank to OPERABLE status within 1 hour or be in at least HOT STANDBY within the next 6 hours and in COLD SHUTDOWN within the following 30 hours.

SURVEILLANCE REQUIREMENTS

4.5.5 The RWST shall be demonstrated OPERABLE:

a. At least once per 7 days by:

1. Verifying the water level in the tank, and

2. Verifying the boron concentration of the water.

b. At least once per 24 hours by verifying the RWST temperature when the RWST ambient air temperature is < 43°F.

3/4.6.2 DEPRESSURIZATION AND COOLING SYSTEMS

CONTAINMENT QUENCH SPRAY SYSTEM

LIMITING CONDITION FOR OPERATION

3.6.2.1 Two separate and independent containment quench spray subsystems shall be OPERABLE.

APPLICABILITY: MODES 1, 2, 3 and 4.

ACTION:

With one containment quench spray subsystem inoperable, restore the inoperable subsystem to OPERABLE status within 72 hours or be in at least HOT STANDBY within the next 6 hours and in COLD SHUTDOWN within the following 30 hours.

SURVEILLANCE REQUIREMENTS

4.6.2.1 Each containment quench spray subsystem shall be demonstrated OPERABLE:

a. At least once per 31 days on a STAGGERED TEST BASIS by:

1. Starting each spray pump,

2. Verifying, that on recirculation flow, when tested in accordance with the requirements of Section 4.0.5, each quench spray pump develops a discharge pressure of $\geq$153 psig at a flow of $\geq$ 1550 gpm,

3. Verifying that each spray pump operates for at least 15 minutes,

4. Cycling each testable power operated or automatic valve in the flow path through at least one complete cycle of full travel.

CHEMICAL ADDITION SYSTEM

LIMITING CONDITION FOR OPERATION

3.6.2.3 The chemical addition system shall be OPERABLE with:

a. A chemical addition tank containing at least 4700 gallons of between 19.5 and 20 percent by weight NaOH solution, and

b. Four chemical injection pumps each capable of adding NaOH solution from the chemical addition tank to a containment quench spray system pump flow.

APPLICABILITY: MODES 1, 2, 3 and 4.

ACTION:

With the chemical addition system inoperable, restore the system to OPERABLE status within 72 hours or be in HOT STANDBY within the next 6 hours; restore the chemical addition system to OPERABLE status within the next 48 hours or be in COLD SHUTDOWN within the next 36 hours.

SURVEILLANCE REQUIREMENTS

4.6.2.3 The chemical addition system shall be demonstrated OPERABLE:

a. At least once per 31 days by verifying that each valve (manual, power-operated, or automatic) in the flow path that is not locked, sealed, or otherwise secured in position, is in its correct position.

b. At least once per 31 days on a STAGGERED TEST BASIS by:

1. Starting each injection pump.

2. Verifying that each injection pump operates for at least 15 minutes.

3. Cycling each testable power-operated or automatic valve in the flow path through at least one complete cycle of full travel.

4. Verify that on recirculation, each injection pump develop a flow between 31 and 34 gpm.

SURVEILLANCE REQUIREMENTS (Continued)

c. At least once per 18 months, during shutdown, by:

1. Cycling each valve in the chemical addition system flow path that is not testable during plant operation, through at least one complete cycle of full travel.

2. Verifying that each automatic valve in the flow path actuates to its correct position on a test signal.

3/4.1.1.4 MODERATOR TEMPERATURE COEFFICIENT (MTC) (Continued)

fuel cycle. The surveillance requirement for measurement of the MTC at the beginning and near the end of each fuel cycle is adequate to confirm the MTC value since this coefficient changes slowly due principally to the reduction in RCS boron concentration associated with fuel burnup.

3/4.1.1.5 MINIMUM TEMPERATURE FOR CRITICALITY

This specification ensures that the reactor will not be made critical with the Reactor Coolant System average temperature less than 541°F. This limitation is required to ensure 1) the moderator temperature coefficient is within its analyzed temperature range, 2) the pressurizer is capable of being in an OPERABLE status with a steam bubble, 3) the reactor pressure vessel is above its minimum NDTT temperature and 4) the protective instrumentation is within its normal operating range.

3/4.1.2 BORATION SYSTEMS

The boron injection system ensures that negative reactivity control is available during each mode of facility operation. The components required to perform this function include 1) borated water sources, 2) charging pumps, 3) separate flow paths, 4) boric acid transfer pumps, 5) associated heat tracing systems, and 6) an emergency power supply from OPERABLE diesel generators.

With the RCS average temperature above 200°F, a minimum of two separate and redundant boron injection systems are provided to ensure single functional capability in the event an assumed failure renders one of the systems inoperable. Allowable out-of-service periods ensure that minor component repair or corrective action may be completed without undue risk to overall facility safety from injection system failures during the repair period.

The required volume of water in the refueling water storage tank for reactivity considerations while operating is 424,000 gallons. The associated technical specification limit on the refueling water storage tank has been established at 441,100 gallons to account for reactivity considerations and the NPSH requirements of the ECCS system.

UNITED STATES
NUCLEAR REGULATORY COMMISSION
WASHINGTON, D. C. 20555

SAFETY EVALUATION BY THE OFFICE OF NUCLEAR REACTOR REGULATION

RELATED TO AMENDMENT NO. 28 TO FACILITY OPERATING LICENSE NO. DPR-66

DUQUESNE LIGHT COMPANY

OHIO EDISON COMPANY

PENNSYLVANIA POWER COMPANY

BEAVER VALLEY POWER STATION, UNIT NO. 1

DOCKET NO. 50-334

Introduction

By letter dated November 17, 1977, the Duquesne Light Company (the licensee) initiated the required actions to satisfy the conditions and requirements of the Order for Modification of License which was issued by the NRC on September 30, 1977. This letter and subsequent correspondence referenced in Appendix 1 to this Safety Evaluation would change the Technical Specifications to reflect changes to assure the adequacy of the Net Positive Suction Head (NPSH) of the low head safety injection and recirculation spray pumps.

Background

NPSH and Containment Pressure and Temperature Analyses

During the course of the operating license review of the North Anna Station, that licensee reevaluated the net positive suction head (NPSH) available to the recirculation spray (RS) and low head safety injection (LHSI) pumps based on a more conservative containment analysis. NPSH is the head, or potential energy, available or required to force a given flow into the impeller of a pump. NPSH is affected by containment pressure, sump water vapor pressure, depth of sump water and suction piping resistance to flow. The revised analysis incorporated analytical techniques and assumptions that were selected to minimize the containment pressure and maximize the containment sump water temperature, thereby minimizing the calculated NPSH available to the pumps; the other factors, namely, depth of sump water and suction piping resistance to flow, have a lesser affect on the revised analysis. As a result of the analysis, certain design modifications were found to be necessary to assure the adequacy of the available NPSH for both the RS and LHSI pumps.

8009190602

The Beaver Valley Power Station, Unit 1 is an operating plant with a design similar to that of North Anna. It was determined that in the event of a major loss-of-coolant accident, the vapor pressure of the water in the Beaver Valley containment sump which is the source of water for the RS and LHSI pumps during the recirculation phase is higher than the original analyses had indicated. This situation can result in inadequate NPSH for the RS and LHSI pumps at specific times during the recirculation phase of long term core cooling and containment cooling.

By a letter dated September 8, 1977, the licensee proposed interim modifications of the RS and LHSI systems and requested that the Beaver Valley Power Station be permitted to operate with the proposed interim modifications until such time as permanent modifications are designed and installed. Based on our review of the information provided by the licensee, we found that the above proposed modifications were acceptable on an interim basis, and by Order dated September 30, 1977, we concluded that until permanent modifications are implemented, operation would not pose an undue threat to the health and safety of the public.

By a letter dated November 17, 1977, as supplemented by letters referenced in Attachment 1, the licensee submitted a report, which presented: (1) proposed permanent modifications of the RS and LHSI systems; (2) the containment pressure and temperature response analyses and associated NPSH available to the RS and LHSI pumps; and (3) proposed modifications to the Quench Spray systems and spray nozzles to support the NPSH modifications.

NPSH and related modifications made to Beaver Valley Unit 1 are:

1. Inside Recirculation Spray (IRS) System

    a. Remove and plug all type 1HH30100 nozzles in the spray headers.

    b. Replace with type 1713A nozzles as required and plug remaining holes.

    c. Install a 4-inch line from the QS line to the sump suction of the IRS and orifices to regulate 150 gpm QS discharge to each suction.

5. RWST Modifications

   a. Removal of mixing weir inside RWST.

   b. Installation of elbows on QS sump suction lines inside RWST.

   c. Upgrade of level instrumentation to provide input to control circuitry for automatic cut-back control by the QS system.

   d. Increase the total volume to 441,100 gallons.

6. Quench Spray System Modification

   a. Replace all 236 type 1HH30100 spray nozzles with 156 type 1713A nozzles and plug remaining holes.

   b. Add piping loop seal to QS flow paths inside containment to the IRS and ORS sump suctions.

   c. Install a larger impeller in each QS pump to handle additional flow.

   d. Install a motor-operated cut-back valve on each QS pump discharge. Install a flow restricting orifice in parallel with the cut-back valve to provide reduced flow for sub-atmospheric peak pressure control.

The basis for implementing the above modifications was to: (1) ensure adequate iodine removal for the most restrictive LOCA for all Engineered Safety Feature pump combinations; (2) provide adequate spray to ensure containment depressurization for all pump combinations; and (3) ensure adequate NPSH available for all LOCA transients. This has been accomplished by modifications to: (1) assure caustic solution reaching the spray nozzles, (2) add caustic solution at a rate that will assure spray pH is within bounds of the licensing requirements for all containment depressurization transients, (3) achieve maximum spray thermal effectiveness for the Quench and Recirculation Spray (RS) Systems, (4) reduce NPSH required for the LHSI by restricting maximum flow conditions, and (5) increase NPSH available for the RS Systems by providing subcooled water to pump suctions.

The above modifications are being made to Beaver Valley Unit 1 during the current outage.

5. RWST Modifications

   a. Removal of mixing weir inside RWST.

   b. Installation of elbows on QS sump suction lines inside RWST.

   c. Upgrade of level instrumentation to provide input to control circuitry for automatic cut-back control by the QS system.

   d. Increase the total volume to 441,100 gallons.

6. Quench Spray System Modification

   a. Replace all 236 type 1HH30100 spray nozzles with 156 type 1713A nozzles and plug remaining holes.

   b. Add piping loop seal to QS flow paths inside containment to the IRS and ORS sump suctions.

   c. Install a larger impeller in each QS pump to handle additional flow.

   d. Install a motor-operated cut-back valve on each QS pump discharge. Install a flow restricting orifice in parallel with the cut-back valve to provide reduced flow for sub-atmospheric peak pressure control.

The basis for implementing the above modifications was to: (1) ensure adequate iodine removal for the most restrictive LOCA for all Engineered Safety Feature pump combinations; (2) provide adequate spray to ensure containment depressurization for all pump combinations; and (3) ensure adequate NPSH available for all LOCA transients. This has been accomplished by modifications to: (1) assure caustic solution reaching the spray nozzles, (2) add caustic solution at a rate that will assure spray pH is within bounds of the licensing requirements for all containment depressurization transients, (3) achieve maximum spray thermal effectiveness for the Quench and Recirculation Spray (RS) Systems, (4) reduce NPSH required for the LHSI by restricting maximum flow conditions, and (5) increase NPSH available for the RS Systems by providing subcooled water to pump suctions.

The above modifications are being made to Beaver Valley Unit 1 during the current outage.

Evaluation

NPSH and Containment Analysis

The calculated pressure in the containment and temperature of the water that accummulates in the containment sumps are important parameters, in regard to available NPSH, in determining the RS and LHSI pump operability following a LOCA. These terms, in combination with the pump static head and associated line friction losses, establish the available NPSH during the transient.

The required NPSH may be reduced by a reduction in the pump flow rate. Alternately, the NPSH available at a given flow rate may be increased by the injection of cold water into the pump suction. The injection of cold water lowers the water temperature at the pump suction and, therefore, lowers the vapor pressure of the water entering the pump. The licensee proposed to utilize both of the above methods to resolve this problem.

Recirculation Spray Pumps

In order to assure an adequate amount of NPSH for the RS pumps, the licensee proposed to divert cold quench spray (QS) water from the QS headers to the RS pump suctions. One hundred and fifty gallons per minute (gpm) will be diverted to each of the inside RS pumps, and 300 gpm will be diverted to each of the outside pumps. The cold QS water injection will lower the water temperature at the pump suction and, thereby lower the vapor pressure of the water entering the pump. Therefore, a 4-inch line leading from each quench spray header will be routed to the suction side of each of the RS pump on the same safety train as the QS pump supplying the water. A flow restricting orifice will be installed in each line to ensure the correct flow. No active components will be used. This proposed modification will allow the pumps to perform as originally specified. No reduction in flow rate to increase the available NPSH is necessary.

Low Head Safety Injection Pumps

The change in the low safety injection flow was needed in order to meet the NPSH requirements of the LHSI pumps. The flow was limited by means of a cavitating venturi and flow restrictor. This change resulted in a slighly lower safety injection flow. However, the licensee has demonstrated that this flow is still higher than the value assumed in the LOCA analysis.

Containment Analysis for Evaluation of NPSH

The new containment response analysis submitted by the licensee to determine the containment pressure and sump water temperature response was based on the following.

The analytical technique used to determine the distribution of mass and energy in the liquid and vapor regions of the containment following a LOCA can influence the containment pressure/temperature response. The pressure flash method and temperature flash method are the two currently used techniques. For the NPSH analysis, the licensee used the pressure flash method which assumes that liquid being expelled from the break flashes at the saturation temperature corresponding to the containment total pressure. This maximizes the temperature of the water entering the sump, and is, therefore, conservative. Previously, the containment analytical model for NPSH analysis assumed that the liquid flashes at the dew point temperature of the containment atmosphere (temperature flash method). The temperature flash method is typically used for peak containment pressure calculations.

The pipe break effluent was assumed to be uniformly mixed with the ECCS injection water spilling from the break. This is an important consideration for postulated cold leg breaks and essentially increases the energy transferred to the sump. This assumption does not affect NPSH calculations for postulated hot leg breaks since the break effluent is already uniformly mixed. Previously, for the NPSH analysis of postulated cold leg breaks, ECCS water was assumed to spill directly to the sump without mixing, which resulted in lower calculated sump water temperatures.

The licensee conducted a number of sensitivity studies to identify the other assumptions that should be used to minimize the calculated available NPSH. We have reviewed the results of these sensitivity studies and conclude that the following conservative assumptions will minimize the calculated available NPSH.

(1) A spray thermal effectivenes of 100% was assumed.

(2) A low initial containment pressure and high initial containment temperature were assumed.

Sensitivity studies were also done to identify the single failure, break size and pipe break location that will give the lowest calculated available NPSH for the RS and LHSI pumps. The results of these studies indicated that for the RS pumps, a postulated hot leg double-ended rupture will result in the lowest available NPSH, and for the LHSI pumps a postulated pump suction double-ended pipe rupture will result in the lowest available NPSH. The available NPSH for the inside recirculation pumps was calculated to be 12.7 feet, the available NPSH for the outside recirculation pumps was calculated to be 12.0 feet and the available NPSH for the LHSI pumps was calculated to be 12.1 feet. The minimum NPSH required are 9.3 feet for the RS pumps and 10.6 feet for the LHSI pumps.

We have performed confirmatory analyses for the pipe break locations that the licensee has identified as giving the lowest available NPSH for the

pumps. For our confirmatory analyses, we used CONTEMPT (MOD26) computer code. The code has been modified to permit the analyses to be based on the pressure flash method. The results of our analysis; i.e., the containment pressure and sump water temperature versus time, are in good agreement with the licensee's results. We, therefore, conclude that the licensee's NPSH analysis is acceptable.

Effects on Containment Depressurization

In view of the system modifications that were found necessary to satisfy the NPSH requirements of the RS and LHSI pumps, the licensee also performed a sensitivity study to determine the impact on the depressurization time used in performing the analysis of the radiological consequences following a postulated loss-of-coolant accident. The results indicate that the containment will be depressurized to below atmospheric presure within an hour following a LOCA.

We have reviewed the input parameters used by the licensee to perform the depressurization analysis and concluded that the analysis would result in a reasonably conservative calculation of the containment depressurization time. The limiting case for containment depressurization is a pump suction double-ended rupture with minimum engineered safety feature operation.

A depressurization time of 3550 seconds was calculated, which is less than the one hour used in performing the analysis of the radiological consequenses following a LOCA. We have performed a confirmatory analysis for the limiting case for containment depressurization. The results of our analysis, i.e., containment pressure and depressurization time are in good agreement with the licensee's results. Therefore, we conclude that the licensee's containment depressurization analysis is acceptable.

Quench Spray System

Based on our requests for information on the containment spray systems and on our discussions on this system, the licensee modified several quench spray components. These modifications will provide additional assurance that the potential consequences of the postulated LOCA remain below the guidelines of 10 CFR Part 100. By controlling the volume flow rate of the caustic solution, the pH of containment spray and the recirculation water in the sump can be kept within acceptable limits. The original design of the Beaver Valley Unit No. 1 included a gravity feed system which fed the caustic solution to the bottom of the RWST. A weir arrangement in the RWST would assure the caustic solution mixed properly with the borated water. The proposed system will feed the caustic solution directly to the quench spray pumps suction at a metered rate provided by positive displacement, chemical injection pumps (CIPs).

The licensee added four positive displacement pumps to the chemical addition lines of the quench spray system: two each, in parallel, to each of the

two quench spray trains. These will ensure that the quench spray will have a pH of at least 8.5 while the chemical addition tank (CAT) is emptying. The earliest the CAT can empty is 55 minutes. After this, the quench spray is borated water from the refueling water storage tank. The licensee plans to shut off the quench spray during a LOCA after about 100 minutes. However, the recirculation spray system starts after 5 minutes, and when the CAT is emptying at the maximum rate, the recirculation spray pH is up to 8 after about 24-30 minutes. In the case of a chemical addition valve failing closed, the CAT takes about 110 minutes to empty; and the quench spray pH is kept to 8 or above until well after the recirculation spray pH increases to 8.

The proposed Technical Specification changes include increased CAT pH, which will ensure that the final containment sump pH will be at least 8.0.

The licensee's changes will improve the overall iodine scrubbing reliability of the containment spray additive systems, and will ensure that at least one spray of pH 11 to 8 will be used at all times during an accident. This is consistent with the iodine scrubbing effectiveness of the containment spray system assumed in the original Safety Evaluation Report. Therefore, the calculated doses from a design basis accident will not increase due to the proposed changes.

The proposed system modifications to the quench spray system for positive injection of caustic solution required electrical, instrumentation, and control changes which have been reviewed by our contractor, EG&G Idaho, Inc. The discussion of the modifications and results of their review have been included as Attachment II. Our subsequent review of the remaining items from EG&G's review are as follows.

Thermal Overload Protection - QS System

Our review has determined that the only new valves added to the chemical addition system for which R.G. 1.106, "Thermal Overload Protection for Electric Motors on MOVs," is applicable are the flow cutback valves which were added to the discharge of the Quench Spray Pumps. These valves are normally open but receive a containment isolation - Phase B signal to open and close on a low-low level in the RWST. The motor operated thermal overload will be bypassed for both of these signals. The licensee has committed to installing the bypass scheme prior to plant startup.

Testing - QS System

The licensee has committed to developing and implementing by plant startup procedures which will institute the following administrative controls to be used for testing the chemical addition system.

(1) Procedures will require notifying personnel performing the test of a containment isolation - Phase B signal so they can restore the system to its normal emergency configuration.

(2) After completion of the test, procedures will require an independent verification of the valve lineup to ensure correct system configuration.

These administrative controls provide assurance that the system will be operable during and after testing.

Automatic QS Flow Reduction - Actuation Instrumentation

The proposed revision to the logic for the actuation of the automatic Quench Spray flow reduction reduces the total number of channels, the channels to trip and the minimum channels operable to one per train.

The application of the single failure criterion in which the failure of one of the quench spray cutback valves to function is bounded by the single failure of a diesel generator or a quench spray pump. Therefore, the results of the containment depressurization analysis are not invalidated by assuming that the single active failure which occurs is a failure of the cutback valve to activate at the required time.

Technical Specifications

We have evaluated the proposed Technical Specifications and conclude that they adequately incorporate the requirements for NPSH as evaluated herein. In the performance of the depressurization study, the licensee also proposed to modify Technical Specification Figures 3.6-1 and 3.6-2 and the Limited Condition for Operation statement 3.6.1.5. The staff has not completed the review of these proposed changes and since they are not required for resolution of the NPSH problem, these proposed changes will be addressed by a separate and subsequent review.

Environmental Consideration

We have determined that the amendment does not authorize a change in effluent types or total amounts nor an increase in power level and will not result in any significant environmental impact. Having made this determination, we have further concluded that the amendment involves an action which is insignificant from the standpoint of environmental impact and, pursuant to 10 CFR §51.5(d)(4), that an environmental impact statement or negative declaration and environmental impact appraisal need not be prepared in connection with the issuance of this amendment.

Conclusion

We have concluded, based on the considerations discussed above, that: (1) because the amendment does not involve a significant increase in the probability or consequences of accidents previously considered and does not involve a significant decrease in a safety margin, the amendment does not involve a significant hazards consideration, (2) there is reasonable assurance that the health and safety of the public will not be endangered by operation in the proposed manner, and (3) such activities will be conducted in compliance with the Commission's regulations and the issuance of this amendment will not be inimical to the common defense and security or to the health and safety of the public.

Date: August 27, 1980

Attachment I

References

1. R. W. Reid to C. N. Dunn letter dated September 30, 1977 transmitted "Order for Modification of License."

2. C. N. Dunn to R. W. Reid letter dated November 17, 1977 proposed permanent modifications to correct NPSH inadequacies, includes Technical Specifications.

3. A. Schwencer to C. N. Dunn letter dated April 5, 1978 request for additional information.

4. C. N. Dunn to A. Schwencer letter dated May 15, 1978 with partial response.

5. C. N. Dunn to A. Schwencer letter dated August 3, 1978 completed request for additional information.

6. C. N. Dunn to A. Schwencer letter dated September 11, 1978 corrected analysis for NPSH adequacy.

7. C. N. Dunn to A. Schwencer letter dated October 24, 1978 transmitted mass and energy release data and revised Technical Specifications.

8. C. N. Dunn to A. Schwencer letter dated September 28, 1979 transmitted revisions to NPSH modifications and revised Technical Specifications.

9. C. N. Dunn to A. Schwencer letter dated October 18, 1979 included revised Technical Specifications.

10. E. J. Woolever to A. Schwencer letter dated February 27, 1980 transmitted revisions to NPSH modifications and revised Technical Specifications.

11. C. N. Dunn to S. Varga letter dated May 22, 1980 transmitted drawings to EG&G.

12. C. N. Dunn to S. Varga letter dated July 3, 1980 transmitted revisions to Technical Specifications.

13. C. N. Dunn to S. Varga letter dated August 6, 1980 provided additional information on NPSH modifications.

14. E. J. Woolever to S. Varga letter dated August 11, 1980 transmitted revision to Technical Specifications.

ATTACHMENT II

EGG-EA-5174

June 1980

ELECTRICAL, INSTRUMENTATION AND CONTROL FEATURES OF QUENCH SPRAY SYSTEM MODIFICATIONS - BEAVER VALLEY NUCLEAR STATION, UNIT 1

S. E. Mays

U.S. Department of Energy
Idaho Operations Office • Idaho National Engineering Laboratory

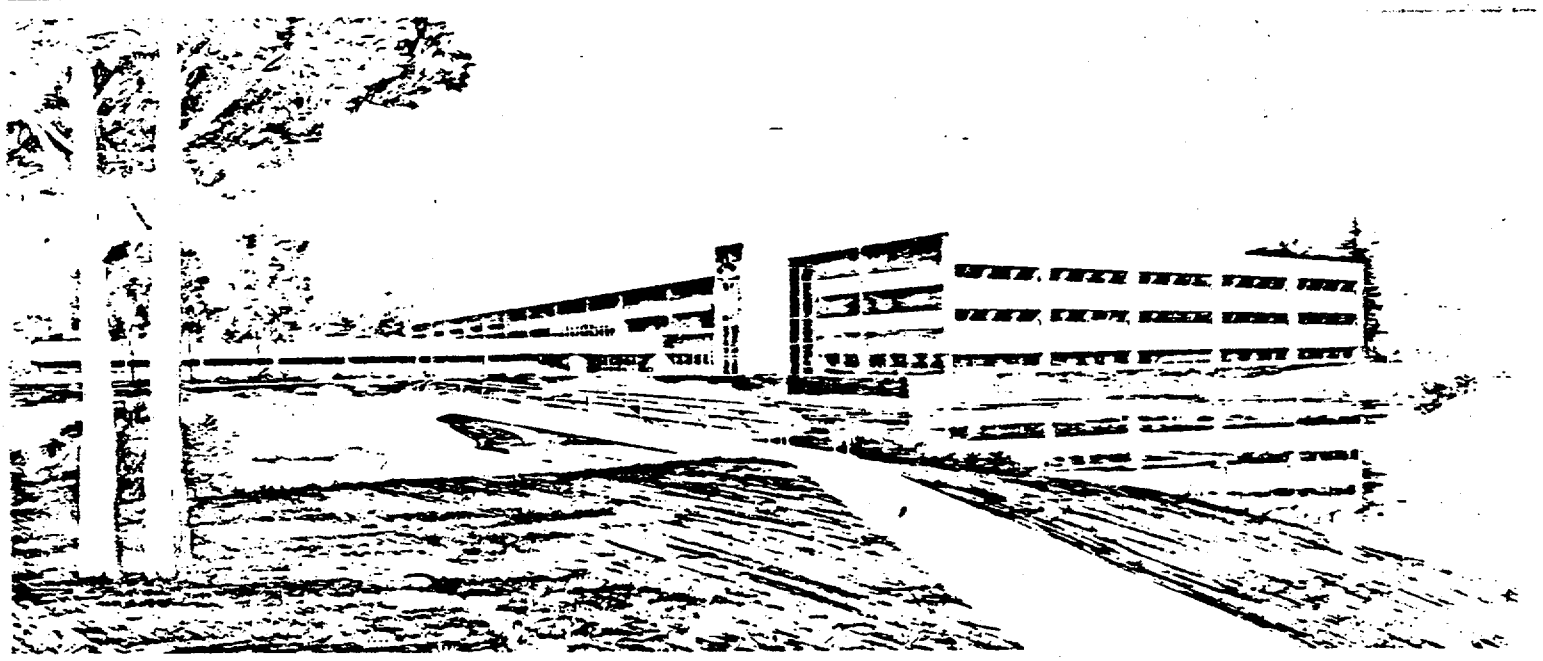

This is an informal report intended for use as a preliminary or working document

Prepared for the
U.S. Nuclear Regulatory Commission
Under DOE Contract No. DE-AC07-76ID01570
FIN No. A6256

EG&G Idaho

dup of
8007230172

EG&G Idaho, Inc.

FORM EG&G-398
(Rev. 11-79)

INTERIM REPORT

Accession No. _____

Report No. EGG-EA-5174

Contract Program or Project Title:

Electrical, Instrumentation, and Control Systems Reviews (On-Call Technical Assistance)

Subject of this Document:

Electrical, Instrumentation, and Control Features of Quench Spray System Modifications

Type of Document:

Informal Report

Author(s):

S. E. Mays

Date of Document:

June 1980

Responsible NRC Individual and NRC Office or Division:

Paul C. Shemanski, NRC-DOR

This document was prepared primarily for preliminary or internal use. It has not received full review and approval. Since there may be substantive changes, this document should not be considered final.

EG&G Idaho, Inc.
Idaho Falls, Idaho 83415

Prepared for the
U.S. Nuclear Regulatory Commission
Washington, D.C.
Under DOE Contract No. DE-AC07-76ID01570
NRC FIN No. A6256

INTERIM REPORT

1791F

TECHNICAL EVALUATION REPORT

ELECTRICAL, INSTRUMENTATION, AND CONTROL FEATURES OF QUENCH SPRAY SYSTEM MODIFICATIONS

BEAVER VALLEY NUCLEAR STATION UNIT 1

Duquense Light

Docket No. 50-334

S. E. Mays
Reliability and Statistics Branch
Engineering Analysis Division
EG&G Idaho, Inc.

5/28
TAC No. 7

TECHNICAL EVALUATION REPORT

ELECTRICAL, INSTRUMENTATION, AND CONTROL FEATURES OF QUENCH SPRAY SYSTEM MODIFICATIONS

BEAVER VALLEY NUCLEAR STATION UNIT 1

1.0 INTRODUCTION

The purpose of this review is to determine whether or not the modifications to the Quench Spray System at Beaver Valley 1 meet the licensing guidelines contained in Standard Review Plan (SRP) 7.3. Specifically, this review will examine the modifications to determine if they are automatically initiated, are electrically redundant and independent, are in compliance with the single failure criteria, and are testable during reactor operations.

2.0 CRITERIA

SRP 7.3 provides guidelines for review of electrical, instrumentation, and control system (EICS) features of Engineered Safety Features (ESF) Systems. IEEE Standard 279 and Regulatory Guide (RG) 1.53 contain single failure criteria. Redundancy and independence criteria are in IEEE Standard 279 and RG 1.6. Design criteria for thermal overload protection for motor-operated valves are in RG 1.106. Testing requirements are contained in IEEE Standard 279 and RG 1.118.

3.0 DISCUSSION AND EVALUATION

The modification to the Quench Spray (QS) system at Beaver Valley 1 includes the addition of two chemical injection loops consisting of two positive displacement Chemical Injection Pumps (CIPs) in each loop which take suction on the Chemical Addition Tank (CAT) and discharge to the suction of the QS system pumps. Each loop has one motor-operated valve (MOV) between the CIPs discharge and the QS system pump suction valve. Figure 1 is a simplified drawing of this section of the QS system.

FIG. 1

CHEMICAL INJECTION PUMPS

BEAVER VALLEY 1

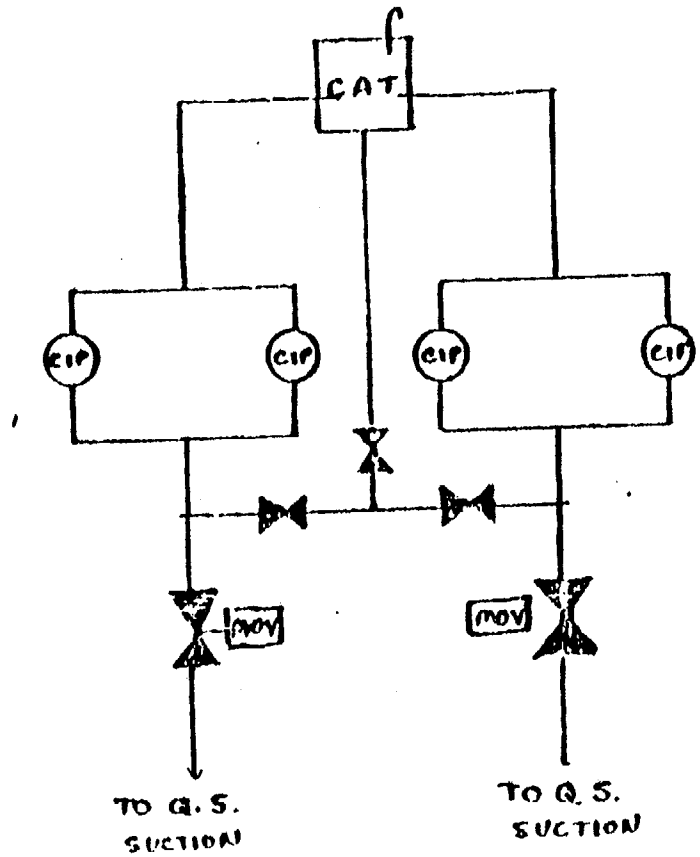

One loop of the modification (two CIPs and one MOV) recieves motive and control power from a bus powered by either offsite power or one of the two emergency diesel generators. The other loop recieves power from an identical redundant bus. The pumps and valves in one loop recieve actuation signals from sensors and relays which are independent of those used to actuate the other loop. Thus, the two loops are electrically independent and are redundant. The CIPs start upon receipt of a containment isolation phase 3 (CIB) signal from the ESF actuation system provided that there is sufficient level in the CAT, QS system flow is adequate, and there is no CIP motor overload. The CIPs will automatically stop on low QS system flow, motor overload, or low CAT level. The capability to manually start or stop the CIPs is bypassed by the CIB signal. One CIP per loop will stop on a signal from the cutback control valve in the QS system loop provided that the other CIP is running and no automatic stop signals, mentioned above, have occurred. Pump running or not running indication is provided in the control room. There is no local control station outside the control room for operation of these pumps.

The CIP discharge MOV for each CIP pair will open on receipt of a CIB signal provided that there is sufficient level in the CAT and there is no motor overload. The valve will close if the control switch is positioned to close and no CIB signal is present or whenever there is low level in the CAT and no motor overload. The MOV overload protection is not bypassed when a CIB signal is received as required by RG 1.106. A light in the control room indicates whenever the valve is not fully closed. There is no local control station for electrical operation of these valves outside the control room.

3.1 Evaluation. Since only one loop of the chemical injection modification is needed to provide the necessary safety function and the two CIP loops are electrically redundant and independent, there are no single failures of EICS features that would render this portion of the QS system inoperable.

Each chemical injection loop is testable during reactor operation by manual positioning of valves to permit the CIPs to discharge back to the

CAT. However, no provisions exist to automatically restore the valve positions to their normal line-up in the event of a CIB signal during testing. This would allow for a reduced volume of chemical addition to the QS system pumps and does not meet the requirements for testing of ESF systems contained in IEEE Standard 279 and RG 1.118. Furthermore, there is no indication, as required by RG 1.47 and BTP ICSB 21, of the system being in this condition which bypasses the protective function.

Thermal overloads for the CIPs discharge MOVs are not bypassed upon receipt of a CIB signal as required by RG 1.106.

4.0 SUMMARY

The EICS features of modifications to the QS system at Beaver Valley 1 meet the requirements of SRP 7.3 for being automatically initiated, redundant, electrically independent, and single failure free. Bypassing the protective function of the chemical injection loops during periodic testing is not indicated in the control room and the bypassed condition is not automatically removed upon receipt of a CIB signal as required by IEEE Standard 279, RG 1.118, RG 1.47, and BTP ICSB 21. Thermal overloads for the CIPs discharge MOVs are not bypassed upon receipt of a CIB signal as required by RG 1.106.

5.0 REFERENCES

1. Duquense Light letter (Woolever) to NRC (Schwencer), "Revision to NPSH Modifications and Revised Technical Specifications," dated February 27, 1980.

2. NUREG-75/087, Standard Review Plan 7.3.

3. Beaver Valley 1 Drawings 8700-RE-21N4-0A2; 8700-RE-21N4-1A4; 11700-LSK-29-4A-3A-7, -4B-3A-7, -4C-3A-7, -4D-3A-7.

7590-01

UNITED STATES NUCLEAR REGULATORY COMMISSION

DOCKET NO. 50-334

DUQUESNE LIGHT COMPANY

OHIO EDISON COMPANY

PENNSYLVANIA POWER COMPANY

NOTICE OF ISSUANCE OF AMENDMENT TO FACILITY OPERATING LICENSE AND TERMINATION OF ORDER FOR MODIFICATION OF LICENSE

The U. S. Nuclear Regulatory Commission (the Commission) has issued Amendment No. 28 to Facility Operating License No. DPR-66 issued to Duquesne Light Company, Ohio Edison Company, and Pennsylvania Power Company (the licensees), which revised Technical Specifications for operation of the Beaver Valley Power Station, Unit No. 1 (the facility) located in Beaver County, Pennsylvania. The amendment is effective as of the date of issuance.

The amendment revises the Technical Specifications to reflect changes as a result of modifications made to alleviate Net Positive Suction Head (NPSH) problems with the Low Head Safety Injection and Recirculation Spray Pumps. This amendment also constitutes completion of actions required of the licensee by the "Order for Modification of license" dated September 30, 1977; that Order is therefore terminated.

The application for the amendment complies with the standards and requirements of the Atomic Energy Act of 1954, as amended (the Act), and the Commission's rules and regulations. The Commission has made appropriate findings as required by the Act and the Commission's rules and regulations in 10 CFR Chapter I, which are set forth in the license amendment. Notice of issuance of the Order for Modification of License was published in the Federal Register on October 25, 1977 (42 FR 56034).

8009190607

The Commission has determined that the issuance of this amendment will not result in any significant environmental impact and that pursuant to 10 CFR §51.5(d)(4) an environmental impact statement or negative declaration and environmental impact appraisal need not be prepared in connection with issuance of this amendment.

For further details with respect to this action, see (1) the application for amendment dated November 17, 1977, May 16, August 3, September 11 and October 24, 1978, September 28 and October 18, 1979, February 27, July 3, August 6 and 11, 1980, (2) Amendment No. 28 to License No. DPR-66, (3) the Commission's related Safety Evaluation and (4) Order for Modification of License dated September 30, 1977. All of these items are available for public inspection at the Commission's Public Document Room, 1717 H Street, N.W., Washington, D.C. and at the B. F. Jones Memorial Library, 663 Franklin Avenue, Aliquippa, Pennsylvania 15001. A copy of items (2), (3) and (4) may be obtained upon request addressed to the U. S. Nuclear Regulatory Commission, Washington, D.C. 20555, Attention: Director, Division of Licensing.

Dated at Bethesda, Maryland, this 27th day of August 1980.

FOR THE NUCLEAR REGULATORY COMMISSION

Marshall Grotenhuis

Marshall Grotenhuis, Acting Chief
Operating Reactors Branch #1
Division of Licensing