Distribution
Docket File 50-334
NRC PDR
Local PDR
TERA
NSIC
NRR Reading
ORB1 Reading

D. Eisenhut
R. Purple
T. Novak
G. Lainas
R. Tedesco
J. Olshinski
J. Heltemes

S. Varga
W. Ross
C. Parrish
I&E (5)
Attorney, OELD
B. Scharf (10)
B. Jones (4)

ACRS (16)
C. Miles
R. Diggs
C. Stephens
J. T Beard

Concurrence form of amendment and P/R notice only

OFFICE	DL:ORB1	DL:ORB1	DL:ORB1	DL:AD:OR	OELD	
SURNAME	WJRoss:cb	CSParrish	SAVarga	TMNovak	S. SOHINKI	
DATE	08/22/80	08/22/80	08/25/80	08/25/80	08/27/80	

#13
48A14-25

UNITED STATES
NUCLEAR REGULATORY COMMISSION
WASHINGTON, D. C. 20555

September 10, 1980

Docket No. 50-334

Mr. C. N. Dunn, Vice President
Operations Division
Duquesne Light Company
435 Sixth Avenue
Pittsburgh, Pennsylvania 15219

Dear Mr. Dunn:

The Commission has issued the enclosed Amendment No. 30 to Facility Operating License No. DPR-66 for the Beaver Valley Nuclear Power Station, Unit No. 1. The amendment consists of changes to the Technical Specifications in response to your application transmitted by letter dated October 27, 1978 as supplemented by letters dated March 7, May 7, August 28, and October 18, 1979.

The amendment revises the radiological Technical Specifications in Appendix A to reflect the installation of a new Steamline Break Protection System.

This amendment does not address the other changes to the Radiological Technical Specifications for Beaver Valley Unit No. 1 that were proposed in your October 27, 1978 letter. After obtaining agreement from members of your staff, the Technical Specification pages enclosed with this letter have been edited to reflect the limited scope of our review. We shall provide an evaluation of your request to operate with less than three cooling loops at a later date.

Copies of the Safety Evaluation and the Notice of Issuance are also enclosed.

Sincerely,

Steven A. Varga

Steven A. Varga, Chief
Operating Reactors Branch #1
Division of Licensing

Enclosures:
1. Amendment No. 30 to DPR-66
2. Safety Evaluation
3. Notice of Issuance

cc: w/enclosures
See next page

cc: Gerald Charnoff, Esquire
Jay E. Silberg, Esquire
Shaw, Pittman, Potts and Trowbridge
1800 M Street, N.W.
Washington, D. C. 20036

Karin Carter, Esquire
Special Assistant Attorney General
Bureau of Administrative Enforcement
5th Floor, Executive House
Harrisburg, Pennsylvania 17120

Mr. Roger Tapan
Stone and Webster Engineering
Corporation
P. O. Box 2325
Boston, Massachusetts 02107

Mr. F. Noon
R & D Center
Westinghouse Electric Corporation
Building 7-303
Pittsburgh, Pennsylvania 15230

B. F. Jones Memorial Library
663 Franklin Avenue
Aliquippa, Pennsylvania 15001

Mr. John Carey, Director
Nuclear Operations
Duquesne Light Company
435 Sixth Avenue
Pittsburgh, Pennsylvania 15219

Mr. R. E. Martin
Duquesne Light Company
435 Sixth Avenue
Pittsburgh, Pennsylvania 15219

Marvin Fein
Utility Counsel
City of Pittsburgh
313 City-County Building
Pittsburgh, Pennsylvania 15219

Mr. James A. Werling
Plant Superintendent
Beaver Valley Power Station
P. O. Box 4
Shippingport, Pennsylvania 15077

Mr. John A. Levin
Public Utility Commission
P. O. Box 3265
Harrisburg, Pennsylvania 17120

Mr. J. D. Sieber, Superintendent
of Licensing and Compliance
Duquesne Light Company
Post Office Box 4
Shippingport, Pennsylvania 15077

Irwin A. Popowsky, Esquire
Office of Consumer Advocate
1425 Strawberry Square
Harrisburg, Pennsylvania 17120

Mr. Charles E. Thomas, Esquire
Thomas and Thomas
212 Locust Street
Box 999
Harrisburg, Pennsylvania 17108

cc: Mr. Joseph H. Mills, Acting Commissioner
State of West Virginia Department
of Labor
1900 Washington Street
East Charleston, West Virginia 25305

N. H. Dyer, M.D.
State Director of Health
State Department of Health
State Office Building No. 1
1800 Washington Street, East
Charleston, West Virginia 25305

Director, Technical Assessment Division
Office of Radiation programs (AW-459)
U. S. Environmental Protection Agency
Crystal Mall #2
Arlington, Virginia 20460

U. S. Environmental Protection Agency
Region III Office
ATTN: EIS COORDINATOR
Curtis Building - 6th Floor
Philadelphia, Pennsylvania 19106

Governor's Office of State Planning
and Development
ATTN: Coordinator, Pennsylvania
State Clearinghouse
P. O. Box 1323
Harrisburg, Pennsylvania 17120

Mr. John A. Levin
Public Utility Commission
P. O. Box 3265
Harrisburg, Pennsylvania 17120

Mr. J. D. Sieber, Superintendent
of Licensing and Compliance
Duquesne Light Company
Post Office Box 4
Shippingport, Pennsylvania 15077

Irwin A. Popowsky, Esquire
Office of Consumer Advocate
1425 Strawberry Square
Harrisburg, Pennsylvania 17120

UNITED STATES
NUCLEAR REGULATORY COMMISSION
WASHINGTON, D. C. 20555

DUQUESNE LIGHT COMPANY

OHIO EDISON COMPANY

PENNSYLVANIA POWER COMPANY

DOCKET NO. 50-334

BEAVER VALLEY POWER STATION, UNIT NO. 1

AMENDMENT TO FACILITY OPERATING LICENSE

Amendment No. 30
License No. DPR-66

1. The Nuclear Regulatory Commission (the Commission) has found that:

   A. The application for amendment by Duquesne Light Company, Ohio Edison Company, and Pennsylvania Power Company (the licenees) dated October 27, 1978 and as supplemented by letters dated March 7, May 7, August 28, and October 18, 1979 complies with the standards and requirements of the Atomic Energy Act of 1954, as amended (the Act) and the Commission's rules and regulations set forth in 10 CFR Chapter I;

   B. The facility will operate in conformity with the application, the provisions of the Act, and the rules and regulations of the Commission;

   C. There is reasonable assurance (i) that the activities authorized by this amendment can be conducted without endangering the health and safety of the public, and (ii) that such activities will be conducted in compliance with the Commission's regulations;

   D. The issuance of this amendment will not be inimical to the common defense and security or to the health and safety of the public; and

   E. The issuance of this amendment is in accordance with 10 CFR Part 51 of the Commission's regulations and all applicable requirements have been satisfied.

8009260181

2. Accordingly, the license is amended by changes to the Technical Specifications as indicated in the attachment to this license amendment, and paragraph 2.C.(2) of Facility Operating License No. DPR-66 is hereby amended to read as follows:

   (2) Technical Specifications

   The Technical Specifications contained in Appendices A and B, as revised through Amendment No. 30 , are hereby incorporated in the license. The licensee shall operate the facility in accordance with the Technical Specifications.

3. This license amendment is effective as of the date of its issuance.

FOR THE NUCLEAR REGULATORY COMMISSION

Steven A. Varga, Chief
Operating Reactors Branch #1
Division of Licensing

Attachment:
Changes to the Technical
Specifications

Date of Issuance: September 10, 1980

ATTACHMENT TO LICENSE AMENDMENT

AMENDMENT NO. 30 TO FACILITY OPERATING LICENSE NO. DPR-66

DOCKET NO. 50-334

Revise Appendix A as follows:

Remove Pages	Insert Pages
3/4 1-2	3/4 1-2
3/4 1-16	3/4 1-16
3/4 3-15	3/4 3-15
3/4 3-16	3/4 3-16
3/4 3-18	3/4 3-18
3/4 3-19	3/4 3-19
3/4 3-20	3/4 3-20
3/4 3-21	3/4 3-21
3/4 3-22	3/4 3-22
3/4 3-24	3/4 3-24
3/4 3-26	3/4 3-26
3/4 3-27	3/4 3-27
3/4 3-29	3/4 3-29
3/4 3-31	3/4 3-31
3/4 4-1	3/4 4-1
3/4 4-2	3/4 4-2
3/4 4-2a	3/4 4-2a
B 3/4 1-1	B 3/4 1-1

3/4.1 REACTIVITY CONTROL SYSTEMS

3/4.1.1 BORATION CONTROL

SHUTDOWN MARGIN - T_{avg} > 200°F

LIMITING CONDITION FOR OPERATION

3.1.1.1 The SHUTDOWN MARGIN shall be ≥1.77% Δk/k.

APPLICABILITY: MODES 1, 2*, 3, and 4.

ACTION:

With the SHUTDOWN MARGIN <1.77% Δk/k, immediately initiate and continue boration at ≥ 30 gpm of 7000 ppm boric acid solution or equivalent until the required SHUTDOWN MARGIN is restored.

SURVEILLANCE REQUIREMENTS

4.1.1.1.1 The SHUTDOWN MARGIN shall be determined to be ≥ 1.77% Δk/k:

a. Within one hour after detection of an inoperable control rod(s) and at least once per 12 hours thereafter while the rod(s) is inoperable. If the inoperable control rod is immovable or untrippable, the above required SHUTDOWN MARGIN shall be increased by an amount at least equal to the withdrawn worth of the immovable or untrippable control rod(s).

b. When in MODES 1 or 2,# at least once per 12 hours by verifying that control bank withdrawal is within the limits of Specification 3.1.3.5.

c. When in MODE 2,## at least once during control rod withdrawal and at least once per hour thereafter until the reactor is critical.

d. Prior to initial operation above 5% RATED THERMAL POWER after each fuel loading, by consideration of the factors of e below, with the control banks at the maximum insertion limit of Specification 3.1.3.5.

* See Special Test Exception 3.10.1
\# With $K_{eff} \geq 1.0$
\## With $K_{eff} < 1.0$

SURVEILLANCE REQUIREMENTS (Continued)

e. When in MODES 3 or 4, at least once per 24 hours by consideration of the following factors:

1. Reactor coolant system boron concentration,

2. Control rod position,

3. Reactor coolant system average temperature,

4. Fuel burnup based on gross thermal energy generation,

5. Xenon concentration, and

6. Samarium concentration.

f. The Reactor Coolant System shall be borated to at least the cold shutdown boron concentration prior to manually blocking the Low Pressurizer Pressure Safety Injection Signal and shall remain at this boron concentration or greater at all times during which this signal is blocked.

4.1.1.1.2 The overall core reactivity balance shall be compared to predicted values to demonstrate agreement within $\pm$ 1% $\Delta k/k$ at least once per 31 Effective Full Power Days (EFPD). This comparision shall consider at least those factors stated in Specification 4.1.1.1.1.e, above. The predicted reactivity values shall be adjusted (normalized) to correspond to the actual core conditions prior to exceeding a fuel burnup of 60 Effective Full Power Days after each fuel loading.

BORATED WATER SOURCES - SHUTDOWN

LIMITING CONDITION FOR OPERATION

3.1.2.7 As a minimum, one of the following borated water sources shall be OPERABLE:

a. A boric acid storage system with:

1. A minimum contained volume of 5000 gallons,
2. Between 7000 and 7700 ppm of boron, and
3. A minimum solution temperature of 65°F.

b. The refueling water storage tank with:

1. A minimum contained volume of 175,000 gallons,
2. A minimum boron concentration of 2000 ppm, and
3. A minimum solution temperature of 43°F.

APPLICABILITY: MODES 5 and 6.

ACTION:

With no borated water source OPERABLE, suspend all operations involving CORE ALTERATIONS or positive reactivity changes until at least one borated water source is restored to OPERABLE status.

SURVEILLANCE REQUIREMENTS

4.1.2.7 The above required borated water source shall be demonstrated OPERABLE:

a. At least once per 7 days by:

1. Verifying the boron concentration of the water,
2. Verifying the water level of the tank, and
3. Verifying the boric acid storage tank solution temperature when it is the source of borated water.

b. At least once per 24 hours by verifying the RWST temperature when it is the source of borated water and the outside ambient air temperature is < 43°F.

BORATED WATER SOURCES - OPERATING

LIMITING CONDITION FOR OPERATION

3.1.2.8 As a minimum, the following borated water source(s) shall be OPERABLE as required by Specification 3.1.2.2.

a. A boric acid storage system with:

1. A minimum contained volume of 11,336 gallons,
2. Between 7000 and 7700 ppm of boron, and
3. A minimum solution temperature of 65°F.

b. The refueling water storage tank with:

1. A minimum contained volume of 439,050 gallons of water,
2. A minimum boron concentration of 2000 ppm, and
3. A minimum solution temperature of 43°F.

APPLICABILITY: MODES 1, 2, 3 and 4.

ACTION:

a. With the boric acid storage system inoperable, restore the storage system to OPERABLE status within 72 hours or be in at least HOT STANDBY and borated to a SHUTDOWN MARGIN equivalent to at least 1% $\Delta k/k$ at 200°F within the next 6 hours; restore the boric acid storage system to OPERABLE status within the next 7 days or be in COLD SHUTDOWN within the next 30 hours.

b. With the refueling water storage tank inoperable, restore the tank to OPERABLE status within one hour or be in at least HOT STANDBY within the next 6 hours and in COLD SHUTDOWN within the following 30 hours.

SURVEILLANCE REQUIREMENTS

4.1.2.8 Each borated water source shall be demonstrated OPERABLE:

TABLE 3.3-3

ENGINEERED SAFETY FEATURE ACTUATION SYSTEM INSTRUMENTATION

FUNCTIONAL UNIT	TOTAL NO. OF CHANNELS	CHANNELS TO TRIP	MINIMUM CHANNELS OPERABLE	APPLICABLE MODES	ACTION
1. SAFETY INJECTION AND FEEDWATER ISOLATION					
a. Manual Initiation	2	1	2	1, 2, 3, 4	18
b. Automatic Actuation Logic	2	1	2	1, 2, 3, 4	13
c. Containment Pressure-High	3	2	2	1, 2, 3	14
d. Pressurizer Pressure - Low	3	2	2	1, 2, 3#	14
e. Low Steamline Pressure					
Three Loops operating	3/loop	2/loop any loop	2/loop any loop	1, 2, 3#	14
Two loops operating	3/loop	2/loop any operating loop	2/any operating loop	1, 2, 3#	15

TABLE 3.3-3 (Continued)

DELETED

TABLE 3.3-3 (Continued)

ENGINEERED SAFETY FEATURE ACTUATION SYSTEM INSTRUMENTATION

FUNCTIONAL UNIT	TOTAL NO. OF CHANNELS	CHANNELS TO TRIP	MINIMUM CHANNELS OPERABLE	APPLICABLE MODES	ACTION
2. CONTAINMENT SPRAY					
a. Manual	2 sets	1 set 2 switches	2 sets	1, 2, 3, 4	18
b. Automatic Actuation Logic	2	1	2	1, 2, 3, 4	13
c. Containment Pressure-- High-High	4	2	3	1, 2, 3	16
3. CONTAINMENT ISOLATION					
a. Phase "A" Isolation					
1) Manual	2	1	2	1, 2, 3, 4	18
2) From Safety Injection Automatic actuation Logic	2	1	2	1, 2, 3, 4	13
b. Phase "B" Isolation					
1) Manual	2 sets (2 switches/set)	1 set	2 sets	1, 2, 3, 4	18
2) Automatic Actuation Logic	2	1	2	1, 2, 3, 4	13
3) Containment Pressure-- High-High	4	2	3	1, 2, 3	16

TABLE 3.3-3 (Continued)

ENGINEERED SAFETY FEATURE ACTUATION SYSTEM INSTRUMENTATION

FUNCTIONAL UNIT	TOTAL NO. OF CHANNELS	CHANNELS TO TRIP	MINIMUM CHANNELS OPERABLE	APPLICABLE MODES	ACTION
4. STEAM LINE ISOLATION					
a. Manual	2/steam line	1/steam line	2/operating steam line	1, 2, 3, 4	18
b. Automatic Actuation Logic	2	1	2	1, 2, 3, 4	13
c. Containment Pressure--Intermediate-High-High	3	2	3	1, 2, 3	14
d. Low Steamline Pressure					
Three Loops Operating	3/Loop	2/Loop Any Loop	2/Loop Any Loop	1, 2, 3#	14
Two Loops Operating	3/Loop	2/Loop any operating loop	2/any operating loop	1, 2, 3#	15
e. High Steam Pressure Rate	3/Loop	2/Loop any Loop	2/operating Loop	1, 2, 3#	14

TABLE 3.3-3 (Continued)

ENGINEERED SAFETY FEATURE ACTUATION SYSTEM INSTRUMENTATION

FUNCTIONAL UNIT	TOTAL NO. OF CHANNELS	CHANNELS TO TRIP	MINIMUM CHANNELS OPERABLE	APPLICABLE MODES	ACTION
5. TURBINE TRIP & FEEDWATER ISOLATION					
a. Steam Generator Water Level--High-High	3/loop	2/loop in any operating loop	2/loop in each operating loop	1, 2, 3	14

TABLE 3.3-3 (Continued)

TABLE NOTATION

#Trip function may be bypassed in this MODE below P-11.

###The channel(s) associated with the protective functions derived from the out of service Reactor Coolant Loop shall be placed in the tripped mode.

ACTION STATEMENTS

ACTION 13 - With the number of OPERABLE Channels one less than the Total Number of Channels, be in HOT STANDBY within 6 hours and in COLD SHUTDOWN within the following 30 hours; however, one channel may be bypassed for up to 1 hour for surveillance testing per Specification 4.3.2.1.1.

ACTION 14 - With the number of OPERABLE Channels one less than the Total Number of Channels:

a. Below P-11, place the inoperable channel in the tripped condition within 1 hour; restore the inoperable channel to OPERABLE status within 24 hours after exceeding P-11; otherwise be in at least HOT STANDBY within the following 6 hours.

b. Above P-11, place the inoperable channel in the tripped condition within 1 hour; operation may continue until performance of the next required CHANNEL FUNCTIONAL TEST.

ACTION 15 - With a channel associated with an operating loop inoperable, restore the inoperable channel to OPERABLE status within 2 hours or be in HOT SHUTDOWN within the following 12 hours; however, one channel associated with an operating loop may be bypassed for up to 2 hours for surveillance testing per Specification 4.3.2.1.1.

ACTION 16 - With the number of OPERABLE Channels one less than the Total Number of Channels:

a. Below P-11, place the inoperable channel in the bypass condition; restore the inoperable channel to OPERABLE status within 24 hours after exceeding P-11; otherwise be in at least HOT SHUTDOWN within the following 12 hours.

TABLE 3.3-3 (Continued)

b. Above P-11 demonstrate that the Minimum Channels OPERABLE requirement is met within 1 hour; operation may continue with the inoperable channel bypassed and one additional channel may be bypassed for up to 2 hours for surveillance testing per Specification 4.3.2.1.

ACTION 17 - With less than the Minimum Channels OPERABLE, operation may continue provided the containment purge and exhaust valves are maintained closed.

ACTION 18 - With the number of OPERABLE Channels one less than the Total Number of Channels, restore the inoperable channel to OPERABLE status within 48 hours or be in at least HOT STANDBY within the next 6 hours and COLD SHUTDOWN within the following 30 hours.

ENGINEERED SAFETY FEATURES INTERLOCKS

DESIGNATION	CONDITION AND SETPOINT	FUNCTI[illegible]
P-11	With 2 of 3 pressurizer pressure channels > 2010 psig.	P-11 p[illegible]ts or defeats the ma[illegible] block of safety inject[illegible]ctuation on low pressu[illegible] pressure coincident [illegible] low pressurizer water le[illegible]l and on low steam line pressure. Block steam line isolation on high pressure rate.
P-12	With 2 of 3 T_{avg} channels < 541°F.	Affects steam dump blocks.

TABLE 3.3-4

ENGINEERED SAFETY FEATURE ACTUATION SYSTEM INSTRUMENTATION TRIP SETPOINTS

FUNCTIONAL UNIT	TRIP SETPOINT	ALLOWABLE VALUES
1. SAFETY INJECTION, TURBINE TRIP AND FEEDWATER ISOLATION		
a. Manual Initiation	Not Applicable	Not Applicable
b. Automatic Actuation Logic	Not Applicable	Not Applicable
c. Containment Pressure--High	≤ 1.5 psig	≤ 2.0 psig
d. Pressurizer Pressure-Low	≥ 1845 psig	≥ 1835 psig
e. Steamline Pressure-Low	≥ 500 psig steam line pressure	≥ 480 psig steam line pressure

TABLE 3.3-4 (Continued)

ENGINEERED SAFETY FEATURE ACTUATION SYSTEM INSTRUMENTATION TRIP SETPOINTS

FUNCTIONAL UNIT	TRIP SETPOINT	ALLOWABLE VALUES
2. CONTAINMENT SPRAY		
a. Manual Initiation	Not Applicable	Not Applicable
b. Automatic Actuation Logic	Not Applicable	Not Applicable
c. Containment Pressure--High-High	≤ 10 psig	≤ 11 psig
3. CONTAINMENT ISOLATION		
a. Phase "A" Isolation		
1. Manual	Not Applicable	Not Applicable
2. From Safety Injection Automatic Actuation Logic	Not Applicable	Not Applicable
b. Phase "B" Isolation		
1. Manual	Not Applicable	Not Applicable
2. Automatic Actuation Logic	Not Applicable	Not Applicable
3. Containment Pressure--High-High	≤ 10 psig	≤ 11 psig

TABLE 3.3-4 (Continued)

ENGINEERED SAFETY FEATURE ACTUATION SYSTEM INSTRUMENTATION TRIP SETPOINTS

FUNCTIONAL UNIT	TRIP SETPOINT	ALLOWABLE VALUES
4. STEAM LINE ISOLATION		
a. Manual	Not Applicable	Not Applicable
b. Automatic Actuation Logic	Not Applicable	Not Applicable
c. Containment Pressure--Intermediate-High-High	≤ 5.0 psig	≤ 5.5 psig
d. Steamline Pressure-Low	≥ 500 psig steam line pressure	≥ 480 psig steam line pressure
e. High Steam Pressure Rate	100 psi/sec	110 psi/sec
5. TURBINE TRIP AND FEEDWATER ISOLATION		
a. Steam Generator Water Level--High-High	≤ 75% of narrow range instrument span each steam generator	≤ 76% of narrow range instrument span each steam generator

TABLE 3.3-5

ENGINEERED SAFETY FEATURES RESPONSE TIMES

INITIATING SIGNAL AND FUNCTION	RESPONSE TIME IN SECONDS
1. Manual	
a. Safety Injection (ECCS)	Not Applicable
Feedwater Isolation	Not Applicable
Reactor Trip (SI)	Not Applicable
Containment Isolation-Phase "A"	Not Applicable
Containment Vent and Purge Isolation	Not Applicable
Auxiliary Feedwater Pumps	Not Applicable
R_X Plant River Water System	Not Applicable
b. Containment Quench Spray Pumps	Not Applicable
Containment Quench Spray Valves	Not Applicable
Containment Isolation-Phase "B"	Not Applicable
c. Containment Isolation-Phase "A"	Not Applicable
d. Control Room Ventilation Isolation	Not Applicable
2. Containment Pressure-High	
a. Safety Injection (ECCS)	$\leq$ 27.0*
b. Reactor Trip (from SI)	$\leq$ 3.0
c. Feedwater Isolation	$\leq$ 75.0(1)
d. Containment Isolation-Phase "A"	$\leq$ 22.0#/33.0##
e. Auxiliary Feedwater Pumps	Not Applicable
f. R_X Plant River Water System	$\leq$ 77.0#/110.0##

TABLE 3.3-5 (Continued)

ENGINEERED SAFETY FEATURES RESPONSE TIMES

INITIATING SIGNAL AND FUNCTION	RESPONSE TIME IN SECONDS
3. Pressurizer Pressure-Low	
a. Safety Injection (ECCS)	≤ 27.0*/13.0#
b. Reactor Trip (from SI)	≤ 3.0
c. Feedwater Isolation	≤ 75.0(1)
d. Containment Isolation-Phase "A"	≤ 22.0#
e. Auxiliary Feedwater Pumps	Not Applicable
f. R_X Plant River Water System	≤ 77.0#/110.0##

TABLE 3.3-5 (Continued)

ENGINEERED SAFETY FEATURES RESPONSE TIMES

INITIATING SIGNAL AND FUNCTION	RESPONSE TIME IN SECONDS
4. Steam Line Pressure-Low	
a. Safety Injection (ECCS)	≤ 13.0#/23.0##
b. Reactor Trip (from SI)	≤ 3.0
c. Feedwater Isolation	≤ 75.0(1)
d. Containment Isolation-Phase "A"	≤ 22.0#/33.0##
e. Auxiliary Feedwater Pumps	Not Applicable
f. R_X Plant River Water System	≤ 77.0#/110.0##
g. Steam Line Isolation	≤ 8.0
5. Containment Pressure--High-High	
a. Containment Quench Spray	≤ 77.0
b. Containment Isolation-Phase "B"	Not Applicable
c. Control Room Ventilation Isolation	≤ 17.0#/30.0##
6. Steam Generator Water Level--High-High	
a. Turbine Trip-Reactor Trip.	≤ 2.5
b. Feedwater Isolation	≤ 78.0(1)
7. Containment Presssure--Intermediate High-High	
a. Steam Line Isolation	≤ 8.0
8. Steamline Pressure Rate--High Negative	
a. Steamline Isolation	≤ 8.0

TABLE 3.3-5 (Continued)

ENGINEERED SAFETY FEATURES RESPONSE TIMES

INITIATING SIGNAL AND FUNCTION	RESPONSE TIME IN SECONDS
6. Steam Flow in Two Steam Lines-High Coincident with Steam Line Pressure-Low	
a. Safety Injection (ECCS)	≤ 13.0#/23.0##
b. Reactor Trip (from SI)	≤ 3.0
c. Feedwater Isolation	≤ 75.0(1)
d. Containment Isolation-Phase "A"	≤ 22.0#/33.0##
e. Auxiliary Feedwater Pumps	Not Applicable
f. R_x Plant River Water System	≤ 77.0#/110.0##
g. Steam Line Isolation	≤ 8.0
7. Containment Pressure--High-High	
a. Containment Quench Spray	≤ 77.0
b. Containment Isolation-Phase "B"	Not Applicable
c. Control Room Ventilation Isolation	≤ 17.0#/30.0##
8. Steam Generator Water Level--High-High	
a. Turbine Trip-Reactor Trip	≤ 2.5
b. Feedwater Isolation	≤ 78.0(1)
9. Containment Presssure--Intermediate High-High	
a. Steam Line Isolation	≤ 8.0

TABLE 4.3-2

ENGINEERED SAFETY FEATURE ACTUATION SYSTEM INSTRUMENTATION
SURVEILLANCE REQUIREMENTS

FUNCTIONAL UNIT	CHANNEL CHECK	CHANNEL CALIBRATION	CHANNEL FUNCTIONAL TEST	MODES IN WHICH SURVEILLANCE REQUIRED
1. SAFETY INJECTION AND FEEDWATER ISOLATION				
a. Manual Initiation	N.A.	N.A.	M(1)	1, 2, 3, 4
b. Automatic Actuation Logic	N.A.	N.A.	M(2)	1, 2, 3, 4
c. Containment Pressure-High	S	R	M	1, 2. 3
d. Pressurizer Pressure--Low	S	R	M	1, 2, 3
e. Steam Line Pressure--Low	S	R	M	1, 2, 3

TABLE 4.3-2 (Continued)

ENGINEERED SAFETY FEATURE ACTUATION SYSTEM INSTRUMENTATION
SURVEILLANCE REQUIREMENTS

FUNCTIONAL UNIT	CHANNEL CHECK	CHANNEL CALIBRATION	CHANNEL FUNCTIONAL TEST	MODES IN WHICH SURVEILLANCE REQUIRED
1.1. SAFETY INJECTION-TRANSFER FROM INJECTION TO THE RE-RECIRCULATION MODE				
a. Manual Initation	N.A.	N.A.	M (1)	1, 2, 3, 4
b. Automatic Actuation Logic Coincident with Safety Injection Signal	N.A.	N.A.	M (2)	1, 2, 3
c. Refueling Water Storage Tank Level-Low	S	R	M	1, 2, 3
d. Refueling Water Storage Tank Level - Auto QS Flow Reduction	S	R	M	1, 2, 3
2. CONTAINMENT SPRAY				
a. Manual Initiation	N.A.	N.A.	M (1)	1, 2, 3, 4
b. Automatic Actuation Logic	N.A.	N.A.	M (2)	1, 2, 3, 4
c. Contain Pressure-High-High	S	R	M	1, 2, 3

TABLE 4.3-2 (Continued)

ENGINEERED SAFETY FEATURE ACTUATION SYSTEM INSTRUMENTATION
SURVEILLANCE REQUIREMENTS

FUNCTIONAL UNIT	CHANNEL CHECK	CHANNEL CALIBRATION	CHANNEL FUNCTIONAL TEST	MODES IN WHICH SURVEILLANCE REQUIRED
4. STEAM LINE ISOLATION				
a. Manual	N.A.	N.A.	M(1)	1, 2, 3, 4
b. Automatic Actuation Logic	N.A.	N.A.	M(2)	1, 2, 3, 4
c. Containment Pressure--Intermediate-High-High	S	R	M	1, 2, 3
d. Steam Line Pressure--Low	S	R	M	1, 2, 3
e. Steamline Pressure Rate-High	S	R	M	1, 2, 3
5. TURBINE TRIP AND FEEDWATER ISOLATION				
a. Steam Generator Water Level--High-High	S	R	M	1, 2, 3

TABLE 4.3-2 (Continued)

TABLE NOTATION

(1) Manual actuation switches shall be tested at least once per 18 months during shutdown. All other circuitry associated with manual safeguards actuation shall receive a CHANNEL FUNCTIONAL TEST at least once per 31 days.

(2) Each train or logic channel shall be tested at least every other 31 days.

3/4.4 REACTOR COOLANT SYSTEM

3/4.4.1 REACTOR COOLANT LOOPS

NORMAL OPERATION

LIMITING CONDITION FOR OPERATION

3.4.1.1 All reactor coolant loops shall be in operation.

APPLICABILITY: As noted below, but excluding MODE 6.*

ACTION:

Above P-7, comply with either of the following ACTIONS:

a. With one reactor coolant loop and associated pump not in operation, subsequent STARTUP and POWER OPERATION above 26% of RATED THERMAL POWER may proceed provided:

   1. The following actions have been completed with the reactor subcritical:

      a) Reduce the overtemperature ΔT trip setpoint to the value specified in Specification 2.2.1 for 2 loop operation.

*See Special Test Exception 3.10.5

ACTION (Continued)

b) Place the following reactor trip system channels, associated with the loop not in operation, in their tripped conditions:#

1) Overpower ΔT channel.

2) Overtemperature ΔT channel.

c) Change the P-8 interlock setpoint from the value specified in Table 3.3-1 to:

1) ≤ 71% of RATED THERMAL POWER when the reactor coolant stop valves in the nonoperating loop are closed, or

2) ≤ 66% of RATED THERMAL POWER when the reactor coolant stop valves in the nonoperating loop are open.

2. THERMAL POWER is restricted to:

a) ≤ 66% of RATED THERMAL POWER when the reactor coolant stop valves in the nonoperating loop are closed, or

b) ≤ 61% of RATED THERMAL POWER when the reactor coolant stop valves in the nonoperating loop are open.

#These channels may be placed in the bypass condition for up to 8 hours during surveillance testing of the overpower and overtemperature ΔT channels of the active loops.

ACTION (Continued)

Below P-7:

a. With $K_{eff} \geq 1.0$, operation below P-7 may proceed provided at least two reactor coolant loops and associated pumps are in operation.

b. With $K_{eff} < 1.0$, operation may proceed provided at least one reactor coolant loop is in operation with an associated reactor coolant or residual heat removal pump.

c. The provisions of Specifications 3.0.3 and 3.0.4 are not applicable.

SURVEILLANCE REQUIREMENTS

4.4.1.1.1 With one reactor coolant loop and associated pump not in operation, at least once per 7 days determine that:

a. The applicable reactor trip system channels specified in the ACTION statements above have been placed in their tripped conditions, and

b. The P-8 interlock setpoint is within the following limits if the P-8 interlock was reset for 2 loop operation:

1. $\leq$ 71% of RATED THERMAL POWER when the reactor coolant stop valves in the nonoperating loop are closed, or

2. $\leq$ 66% of RATED THERMAL POWER when the reactor coolant stop valves in the nonoperating loop are open.

4.4.1.1.2 The power to each of the reactor coolant system loop stop valves shall be verified to be removed at least once per 31 days during operation in MODES 1 or 2.

3/4.1.1 BORATION CONTROL

3/4.1.1.1 and 3/4.1.1.2 SHUTDOWN MARGIN

A sufficient SHUTDOWN MARGIN ensures that 1) the reactor can be made subcritical from all operating conditions, 2) the reactivity transients associated with postulated accident conditions are controllable within acceptable limits, and 3) the reactor will be maintained sufficiently subcritical to preclude inadvertent criticality in the shutdown condition.

SHUTDOWN MARGIN requirements vary throughout core life as a function of fuel depletion, RCS boron concentration, and RCS T_{avg}. The most restrictive condition occurs at EOL, with T_{avg} at no load operating temperature, and is associated with a postulated steam line break accident and resulting uncontrolled RCS cooldown. In the analysis of this accident, a minimum SHUTDOWN MARGIN of 1.77% $\Delta k/k$ is initially required to control the reactivity transient. Accordingly, the SHUTDOWN MARGIN requirement is based upon this limiting condition and is consistent with FSAR accident analysis assumptions. With T_{avg} <200°F, the reactivity transients resulting from a postulated steam line break cooldown are minimal and a 1% $\Delta k/k$ shutdown margin provides adequate protection.

The purpose of borating to the cold shutdown boron concentration prior to blocking safety injection is to preclude a return to criticality should a steam line break occur during plant heatup or cooldown.

3/4.1.1.3 BORON DILUTION

A minimum flow rate of at least 3000 GPM provides adequate mixing, prevents stratification and ensures that reactivity changes will be gradual during boron concentration reductions in the Reactor Coolant System. A flow rate of at least 3000 GPM will circulate an equivalent Reactor Coolant System volume of 9370 cubic feet in approximately 30 minutes. The reactivity change rate associated with boron reductions will therefore be within the capability for operator recognition and control.

3/4.1.1.4 MODERATOR TEMPERATURE COEFFICIENT (MTC)

The limitations on MTC are provided to ensure that the assumptions used in the accident and transient analyses remain valid through each

3/4.1.1.4 MODERATOR TEMPERATURE COEFFICIENT (MTC) (Continued)

fuel cycle. The surveillance requirement for measurement of the MTC at the beginning and near the end of each fuel cycle is adequate to confirm the MTC value since this coefficient changes slowly due principally to the reduction in RCS boron concentration associated with fuel burnup.

3/4.1.1.5 MINIMUM TEMPERATURE FOR CRITICALITY

This specification ensures that the reactor will not be made critical with the Reactor Coolant System average temperature less than 541°F. This limitation is required to ensure 1) the moderator temperature coefficient is within its analyzed temperature range, 2) the pressurizer is capable of being in an OPERABLE status with a steam bubble, 3) the reactor pressure vessel is above its minimum NDTT temperature and 4) the protective instrumentation is within its normal operating range.

3/4.1.2 BORATION SYSTEMS

The boron injection system ensures that negative reactivity control is available during each mode of facility operation. The components required to perform this function include 1) borated water sources, 2) charging pumps, 3) separate flow paths, 4) boric acid transfer pumps, 5) associated heat tracing systems, and 6) an emergency power supply from OPERABLE diesel generators.

With the RCS average temperature above 200°F, a minimum of two separate and redundant boron injection systems are provided to ensure single functional capability in the event an assumed failure renders one of the systems inoperable. Allowable out-of-service periods ensure that minor component repair or corrective action may be completed without undue risk to overall facility safety from injection system failures during the repair period.

The required volume of water in the refueling water storage tank for reactivity considerations while operating is 424,000 gallons. The associated technical specification limit on the refueling water storage tank has been established at 441,100 gallons to account for reactivity considerations and the NPSH requirements of the ECCS system.

UNITED STATES
NUCLEAR REGULATORY COMMISSION
WASHINGTON, D. C. 20555

SAFETY EVALUATION BY THE OFFICE OF NUCLEAR REACTOR REGULATION

RELATED TO AMENDMENT NO. 30 TO FACILITY OPERATING LICENSE NO. DPR-66

DUQUESNE LIGHT COMPANY

OHIO EDISON COMPANY

PENNSYLVANIA POWER COMPANY

BEAVER VALLEY POWER STATION, UNIT NO. 1

DOCKET NO. 50-334

Introduction

By letter dated October 27, 1978, Duquesne Light Company (the licensee) submitted to the NRC proposed Technical Specifications in support of a new Steamline Break Protection System. The licensee desires to install this new system during the refueling outage preceding Cycle 2 operation. The NRC Staff has completed its review of all information submitted by the licensee and has found the proposed Steamline Break Protection System to be acceptable assuming the plant procedures are modified to address possible steamline breaks during heatup and cooldown of the Reactor Coolant System.

For the purpose of this review, the Staff has evaluated the acceptance of each component of the proposed system during normal operation as well as during plant heatup and cooldown. This evaluation is presented in Attachment 1. Inasmuch as the proposed system entails significant modification of existing control circuitry, the electrical, instrumentation and control designs have been evaluated using IEEE Standard 279-1971 criteria and the requirements of 10 CFR Part 50. This evaluation is presented in Attachment 2. Neither of these evaluations have considered operation of the plant with less than three cooling loops in operation; consequently, operation with (N-1) cooling loops continues to be forbidden.

Technical Specification Changes

Changes in the Radiological Technical Specifications as a result of this amendment are summarized as follows:

Table 3.3-3

1.e (p. 3/4 3-15)

Removal of "High Steamline Differential Pressure" trip and Substitution of "Low Steamline Pressure" trip for Safety Injection in Modes 1, 2 and 3.

8009260186

1.f (p. 3/4 3-16)

Actuation of "Safety Injection" on the basis of "High Steam Line Flow" (coincident with either "Low Steamline Pressure" or "Tavg Low-Low") has been eliminated during Modes 1, 2 and 3.

4.d and 4.e (p. 3/4 3-18 and 3/4 3-19)

Actuation of "Steam Line Isolation by High Steam Flow in Two Steam Lines" (coincident with either "Tavg, Low-Low" or "Low Steam Line Pressure") has been eliminated in favor of actuation by "Low Steam Line Pressure" (blocked during normal cooldown and heatup operation) or "High Steam Line Pressure Rate" (only during normal cooldown and heatup operations) in Modes 1, 2, and 3.

Table Notation (p. 3/4 3-20)

Callout (##) related to bypassing trip functions below P-12 has been eliminated with removal of the associated Functional Units, "High Steamline Differential Pressure", "High Steam Flow" and "Low Steam Line Pressure."

Action Statements (p. 3/4 3-20)

Actions 14 and 16 - These Action Statements no longer refer to Interlock P-12 inasmuch as Tavg has been eliminated from the Steam Line Break Protection System.

Engineered Safety Feature Interlocks (p. 3/4 3-21)

Interlock P-12 is no longer used to control actuation of safety injection on high steam line flow and low steam line pressure or control of steam line isolation on the basis of high steam flow.

Table 3.3-4 1.e (p. 3/4 3-22)

The description of the trip setpoint of the "High Differential Pressure Between Steam Lines" system has been eliminated because this system has been removed from the Steam Line Break Protection System. A new specification refers only to the setting of the Low Steam Line Pressure trip point.

1.f (p. 3/4 3-22)

The description of the setpoint of the coincident system of "High Steam Flow in Two Steam Lines" with either Tavg Low-Low or Low Steam Line Pressure has been eliminated because this sytem is no longer a part of the Steam Line Protection System.

4.d (p. 3/4 3-24)

The description of the setpoint has been eliminated for the same reason as in 1.f. A new specification has been included for the trip setpoint for Low Steam Line Pressure only.

4.e (p. 3/4 3-24)

A new specification has been included for the trip setpoint for High Steam Pressure Rate. This sytem is now used to actuate Steamline Isolation during normal cooldown and warmup.

Table 3.3-5 (p. 3/4 3-26 and 3/4 3-27)

Section 4

Section 4 now refers to actuation response times based on Low Steam Line Pressure rather than High Steam Line Differential Pressure.

Section 5

All specifications based on coincidence of High Steam Line Flow and Tavg Low-Low have been eliminated and this section now includes information previously in Section 7.

Section 6

All specifications based on coincidence of High Steam Line Flow and Low Steam Line Pressure have been eliminated and this section now includes information previously in Section 8.

Section 8

A new section has been included to set the response time for the negative "High Steamline Pressure" signal for actuating Steamline Isolation.

Table 4.3-2 (p. 3/4 3-29 and 3/4 3-31)

1.e and 1.f

Surveillance requirements for the instrumentation associated with "High Steam Line Differential Pressure" and with coincidence of High Steam Line

Flow and either Tavg Low-Low or Low Steam Line Pressure have been eliminated for the purposes of actuating Safety Injection and Feedwater Isolation. A new requirement based on Low Steam Line Pressure has been added.

4.d

The surveillance requirements for instrumentation associated with High Steam Line Flow and either Tavg Low-Low or Low Steam Line Pressure have been eliminated for the purposes of actuating Steam Line Isolation. A new requirement based on Low Steam Line Pressure has been added.

4.e

A new surveillance requirement for the instrumentation of High Steam Line Pressure Rate has been added.

3.4.1.1 (p. 3/4 4-1 and 3/4 4-2)

Former Action "a" (relating to startup or continued operation above P-7 (≥11% rated power) with one reactor coolant loop and associated pump not in operation) has been revised through the elimination of all references (Sections a.1, a.2, a.3 and a.4) to the components of the replaced Steam Line Break Protection System. Sections b.3, b.4, b.5 and b.6 of Action b.1.(b), that relate to startup or power operation above 26% of rated thermal power have been eliminated for the same reason.

4.4.1.1.1 (p. 3/4 4-2a)

Paragraph "A" has been revised to remove reference to ESF actuation system instrumentation channels that have been eliminated in the new SLBP system.

4.1.1.1.1 (p. 3/4 1-2 and B 3/4 1-1)

A new surveillance requirement has been added to provide positive assurance that the new Steam Line Break Protection System (blocking of Low Pressurizer Pressure trip during cooldown or heatup operations) cannot be enabled until the Reactor Coolant System is borated to a cold shutdown condition.

Summary

Based on the evaluations in Attachments 1 and 2 we find that the proposed Steam Line Break Protection System is acceptable. During normal operation the proposed system is equivalent to or exceeds the capabilities of the present system. During heatup and/or cooldown operations the proposed system provides a reduced level of protection in that there are no primary trips that actuate Safety Injection if a steam line break occurs inside or outside containment. The proposed system is acceptable for use during heatup and cooldown operations, however, because the licensee has additional

protection, through a new surveillance technical specification for assuring adequately borated Reactor Coolant, new procedural action to assure adequate charging flow rate, and through an analysis that demonstrates the core will always be covered and the Reactor Coolant System remains subcooled with Safety Injection. Acceptable implementation of the required procedures must be made before restart and will be monitored by the NRC Office of Inspection and Enforcement.

Environmental Consideration

We have determined that the amendment does not authorize a change in effluent types or total amounts nor an increase in power level and will not result in any significant environmental impact. Having made this determination, we have further concluded that the amendment involves an action which is insignificant from the standpoint of environmental impact and, pursuant to 10 CFR §51.5(d)(4), that an environmental impact statement or negative declaration and environmental impact appraisal need not be prepared in connection with the issuance of this amendment.

Conclusion

We have concluded, based on the considerations discussed above, that: (1) because the amendment does not involve a significant increase in the probability or consequences of accidents previously considered and does not involve a significant decrease in a safety margin, the amendment does not involve a significant hazards consideration, (2) there is reasonable assurance that the health and safety of the public will not be endangered by operation in the proposed manner, and (3) such activities will be conducted in compliance with the Commission's regulations and the issuance of this amendment will not be inimical to the common defense and security or to the health and safety of the public.

Date: September 10, 1980

ATTACHMENT 1

Introduction

By letter dated October 27, 1978,[1] Duquense Light Company (the licensee) requested changes to the Beaver Valley Power Station, Unit 1 (BVPS) Technical Specifications and FSAR related to several plant features, one of which is a modification to the BVPS Main Steam Line Break Protection System (SLBPS). The licensee requested changes to the electronics, logic and setpoints such that virtually a new SLBPS would result.

The staff, licensee and representatives of Westinghouse (W) met on February 23, 1979 to discuss the proposed SLBPS. Questions were given to the licensee at that meeting.[2] Responses to these questions were transmitted to the staff in the licensee's March 7,[3] May 7,[4] and August 28, 1979[5] submittals.

Staff concerns raised during the review of these submittals resulted in an additional meeting with the licensee and representatives of W on October 9, 1979.[6] The information presented at this meeting was formally submitted to the staff in the licensee's October 18, 1979 letter.[7]

This safety evaluation presents a discussion of the existing and proposed SLBPSs, the operation of each system during normal operation as well as during plant heatups or cooldowns, and the staff's evaluation of the proposed system.

Background

This section provides a general discussion of the purposes of safety injection (SI) and steam line isolation (SLI) during steam line break (SLB) accidents. Also, the BVPS existing and proposed SLB protection systems (SLBPS) are described.

Safety Injection and Steam Line Isolation

The actuation of the safety injection system and the automatic closure of the main steam isolation valves (MISV) ensures the consequences of the steam line break accident (SLB) are bounded by the safety analysis (FSAR). The high head safety injection system provides RCS makeup to account for the shrinkage caused by the cooldown, and highly concentrated boric acid to ensure adequate shutdown margin should a control rod fail to be inserted into the core. Steam line isolation ensures that at most only one steam generator blows down through the broken steam line.

BVPS Existing and Proposed SLBPS

The existing and proposed BVPS SLBPSs consist of various detectors, electronics and logic arranged to provide two functions during SLB: 1) Actuation of the SI and 2) SLI. Figures 1 and 2 show block diagrams of the existing and proposed SLBPSs. Both figures represent only one of the two trains of actuation logic.

The proposed SLBPS has deleted the following SIS actuation signals:

- High differential pressure signals between steam lines.
- High steam line flow coincident with either low-low T_{AVE} or low steam line pressure.

The proposed SLBPS has added the following SIS actuation signals:

- Two-out-of-three low steam line pressure in any single steam line.

The proposed SLBPS has deleted the following SLI signals:

- High steam line flow coincident with either low-low RCS T_{AVE} or low steam line pressure.

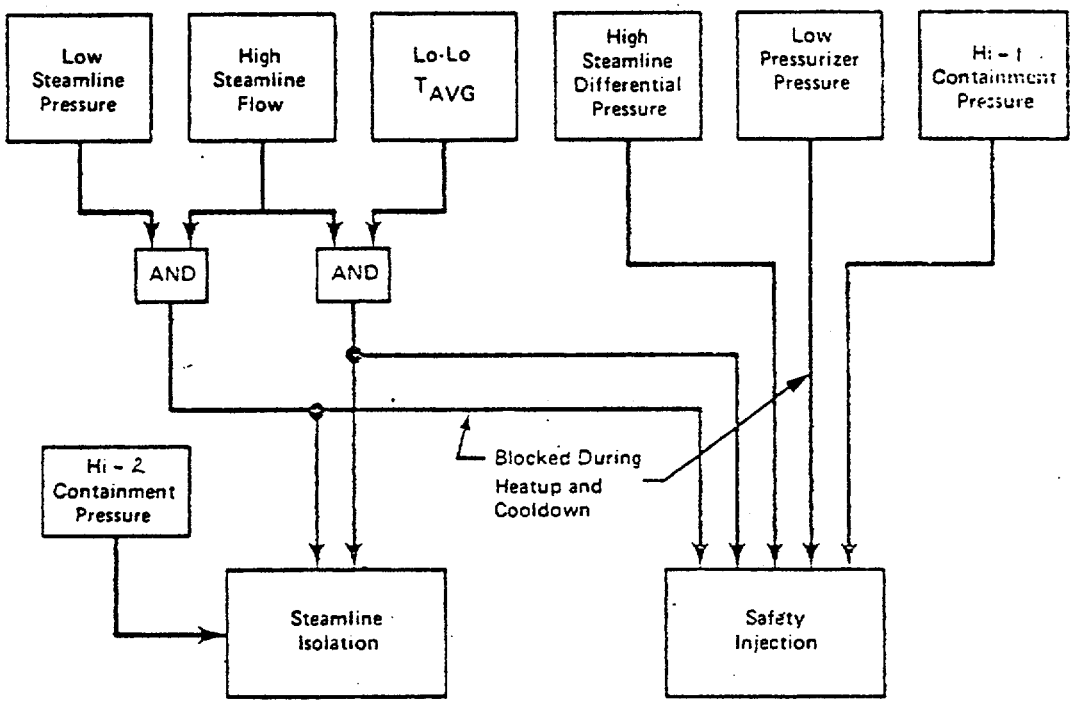

Figure 1
Existing Steamline Break Protection System

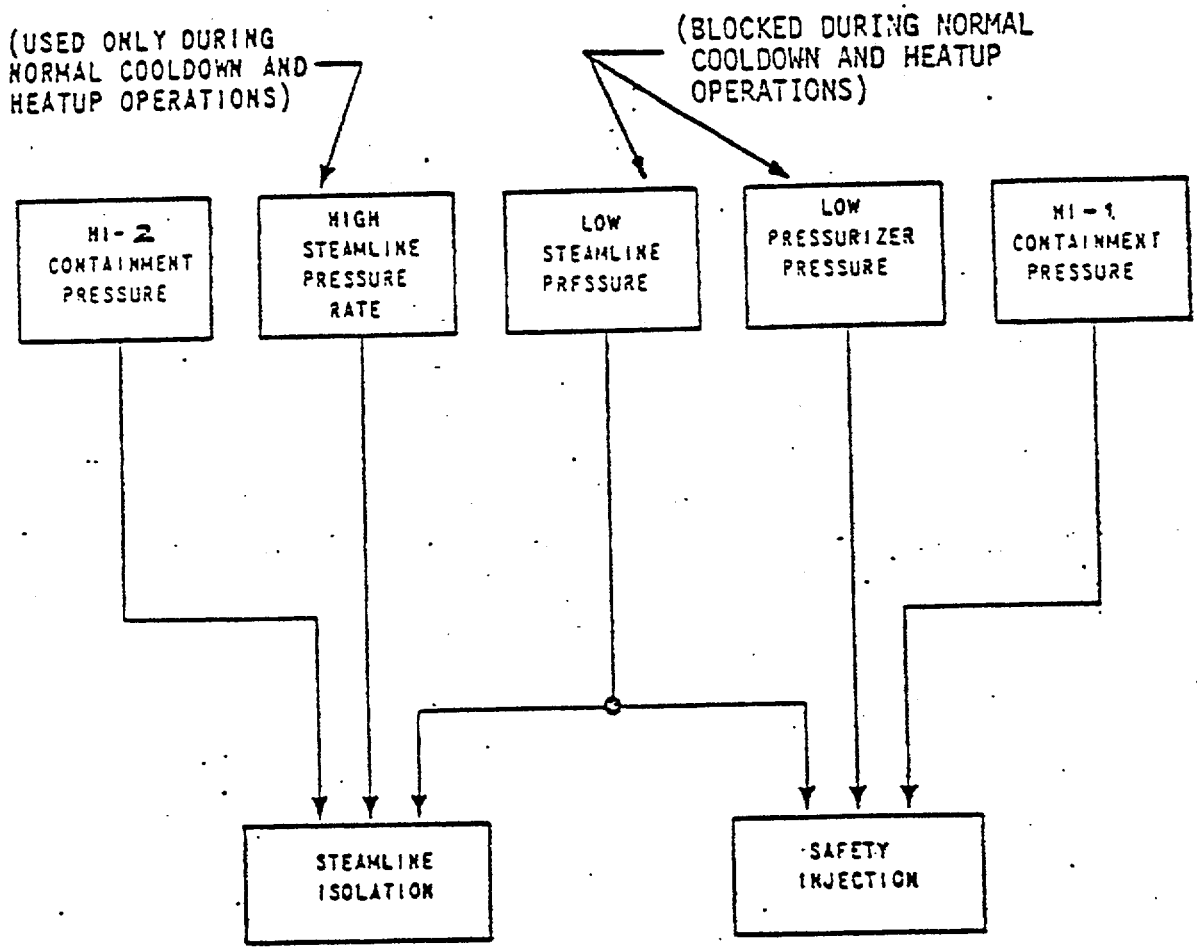

Figure 2
New Steamline Break Protection System

And has modified the containment pressure trip setpoint from "high-high" to "intermediate-high."*

The proposed SLBPS has added the following SLI signal(s):

- Low steam line pressure (above P-11)
- High negative steam line pressure rate (below P-11).

The low steam line pressure logic circuitry in the existing SLBPS actuated if two-out-of-three steam lines had pressure below 500 psig.** However, the proposed SLBPS low steam line pressure logic employs "lead-lag" conditioning circuitry. The circuit takes the steam line pressure as an input and outputs a signal proportional to the derivative of the input, which decays to the value of the input at the time constant τ_2. Thus, the "lead-lag" signal conditioner results in a faster response to changing steam line pressure.

The high negative rate of change of steam line pressure function employs a "derivative-lag" signal compensation. This type of signal compensation is the same as that used in the T_{AVE} input to the overpower ΔT reactor trip setpoint calculator. The "derivative-lag" signal conditioner takes the input signal, steam line pressure, and outputs a signal representative of the lagged version of the derivative of the input. Thus, if a steam line break occurred below P-11, SLI would occur only if the break area was large enough so that the rate of change of steam line pressure resulted in a conditioned signal that exceeded the trip value. If the break area was below that "trip" area, then SLI would not occur

*This is an administrative error in the technical specifications.

**There are 3 pressure sensors on each steam line. If 2 out of 3 sensors went below 500 psig, the steam line pressure logic for that loop tripped.

Evaluation

This section of the safety evaluation presents the staff's overall evaluation of the proposed SLBPS. Since the operation of the new system differs depending on the plant condition, the staff's evaluation is presented by the appropriate plant condition.

Normal Plant Operation (i.e., pressurizer pressure above P-11, and reactor critical at any power level).

During normal plant operation, with pressurizer pressure above the P-11 setpoint, 2010 psig, the new SLBPS must provide protection from all credible SLBs. Since no new accident analyses have been performed, the existing FSAR analyses must remain applicable with the proposed new SLBPS.

The BVPS FSAR analysis for steam line breaks upstream of the MSIV, and inside containment, assumes that the non-return valve (NRV) in the broken steam line fails to close. Thus, steam from all three SGs is assumed to flow out the break until SLI occurs on high steam flow coincident with low steam line pressure (on two steam lines).

Once the MSIVs are closed, steam flow is only from the associated SG. No credit is taken for the isolation provided by the NRV. Also, no credit is taken in the analysis for the high-1 containment pressure or the high steam line differential pressure safety injection signals. The analysis assumes safety injection initiation only after two steam line high flows coincident with two steam line low pressures have occurred, whereas in reality the high steamline differential pressure signal would initiate SI significantly earlier.

For steam line breaks outside containment, downstream of the NRV, the FSAR analysis assumes SI initiation and SLI on high steam flow coincident with low steam line pressure. The analysis does not take credit for the low pressurizer

TABLE 1

Trip Functions Provided by the Existing and Proposed BVPS SLBPSs During Normal Plant Operations (at power)[3]

Break Location		SAFETY INJECTION			STEAM LINE ISOLATION		
		Actual Trip		FSAR Assumed Trip	Actual Trip		FSAR Assumed Trip
		Existing SLBPS	New SLBPS		Existing SLBPSs	New SLBPS	
Breaks Upstream of NRV (Inside Containment)	Trip	High SL ΔP	Low SLP	High SF + Low SLP	NRV provides isolation	NRV provides isolation	High SF + Low SLP
	Back Up Trips[2]	High-1 P_c Low P_p High SF + Low SLP[1]	High-1 P_c Low P_p		High SF + Low SLP[1] High-2 P_c[1]	High-2 P_c[1]	
Breaks Down-Stream of NRV (Outside Containment)	Trip	High SF + Low SLP	Low SLP	High SF + Low SLP	High SF + Low SLP	Low SLP	High SF + Low SLP
	Back Up Trips[2]	Low P_p	Low P_p		None	None	

[1]These signals provide SI or SLI if the NRV fails.

[2]Manual SI and SLI is also always available.

[3]See Table 2 for Abbreviations and Setpoints

TABLE 2

Abbreviations and Trip Values

Abbreviation	Trip Function	Trip Value[1]
High SL ΔP	High steam line differential pressure	100 psi
High-1 P_c	High-1 containment pressure	1.5 psig
High-2 P_c	High-2 containment pressure	10 psig
Low P_p	Low pressurizer pressure	1845 psig
High SF	High steam flow in two steam lines and low steam pressure in two steam lines	0-20% power, trip is constant at 40% steam flow, from 20% to 100% power, trip increases linearly from 40% to 110%.
LLT_A	Low-Low average temperature	543°F
Low SLP	Steam pressure in any single steam line is low	500 psig

[1]Trip values are from Technical Specification Table 3.3-4, "Trip Setpoint" column, which represents the numerical value.

pressure SI, which may occur before the assumed signal (depending on break size). Table 1 summarizes the actual and assumed signals that initiate SI and SLI in the existing and the proposed SLBPSs, and the backup signals for each function of each system. Table 2 shows the trip signal setpoint shown in Table 1.

As shown in Table 1, for SLBs inside containment, SI is afforded by the High SL ΔP signal in the existing system, and by the low SLP signal in the proposed system. The FSAR assumes that the NRV fails, and assumes that SI occurs when two-out-of-three steam lines generate a High flow signal, coincident with two-out-of-three steam lines in a low pressure condition ($\leq$500 psig). In fact, Westinghouse has stated that the High SF portion of the signal is established almost immediately after the SLB, and the SI trip was "waiting" until steam line pressure reached 500 psig, at about 1.25 seconds.[1]

The existing SLBPS affords SI by the High SL ΔP signal, and analyses[1] have shown that for the design base SLB, this trip occurs in about 0.50 seconds. That is, pressure in the broken steam line decays to 100 psi below the other two steam lines in about 0.50 seconds, including instrument delay times. Analyses[1] have shown that the proposed SLBPS yields an SI trip by the low SLP trip signal about 0.13 seconds after the SLB. The faster response of this signal is due to the lead-lag signal conditioning. Therefore, for the design base SLB inside containment, the proposed SLBPS affords SI earlier than both the existing SLBPS and the assumed FSAR trip.

*The calculations are from WCAP 9226, Rev. 1, "Reactor Core Response to Excessive Secondary Steam Release," January 1978, Table 3.1-2. This analysis was for a SLB on a 3 loop, 2785 MWt PWR with a SLBPS similar to the existing BVPS system (Figure 1). The table also shows results with the proposed SLBPS.

During a SLB outside containment, Table 1 shows that the existing SLBPS yields an SI trip when two-out-of-three steam lines generate a high flow signal coincident with two-out-of-three steam line pressures below 500 psig. Table 1 also shows that the FSAR takes credit for this trip. However, the proposed SLBPS does not have this trip function, but uses the low steam line pressure (in any single steam line) signal. Since the new Low SLP signal is processed through the lead-lag conditioner, the trip occurs faster than for the original circuitry where the trip had to actually wait for two-out-of-three steam line pressures to reach 500 psig.* Therefore, for the design base SLB outside containment, the proposed SLBPS affords SI trip earlier than the existing SLBPS and the assumed FSAR trip.

Table 1 shows that for breaks inside containment, the NRV on the damaged steam line isolates the break from the remaining intact SGs, thus limiting steam flow to only from the associated SG. The NRVs are not being removed for the proposed SLBPS, therefore they would continue to provide isolation. However, if the NRV should fail, then isolation is provided by the SLI function which, on the original SLBPS, was generated on a High SF and low SLP signal. The new SLBPS would initiate SLI on just a low SLP signal, which has been processed by the lead-lag circuitry.

SLBs outside containment would result in SLI due to the High SF plus low SLP on the existing SLBPS, and due to the low SLP on the proposed SLBPS. The FSAR takes credit for the SLI on High SF plus low SLP. Since the signal conditioner

*The high steam line flow portion of the trip occurs almost immediately after the SLB.

on the low SLP signal results in an earlier trip than the unconditional low SLP signal, SLI for breaks outside containment with the proposed SLPBS would occur earlier than the existing SLBPs or the trip assumed in the FSAR. Therefore, with respect to SLI, the proposed SLBPS should afford earlier trips for breaks both inside and outside containment.

For SLBs either inside or outside containment, the SI and SLI trip times assumed in the FSAR are all greater than the trips which would occur with the proposed SLBPS. Therefore, the FSAR analysis bounds the plant response with the proposed SLBPS. Also, the plant response (time of SI and SLI) in most cases is better with the proposed SLBPS than with the existing SLBPS, due mainly to the lead-lag conditioning circuitry. However, for SLBs smaller than the design base SLB inside containment, SI with the proposed SLBPS may occur later than with the existing SLBPS, but in no case later than assumed in the FSAR. According to Westinghouse, in these cases where SI would occur later with the proposed system, the low pressurizer pressure SI signal affords SI such that the plant response is not significantly different than the response with the existing SLBPS.

Based on the comparison of the trips and trip times afforded by the existing and proposed SLBPSs, and the trips assumed in the BVPS FSAR, the staff concludes that the new SLBPS affords acceptable protection for SLBs during normal plant operations (the plant is critical at any power level).

Startup and Shutdown Operation (i.e., pressurizer pressure below P-11)
Whenever the reactor coolant is being heated up to the normal system temperature, or cooled down for system shutdown operation, the proposed SLBPS must be able to provide protection from SLBs such that acceptable core cooling and offsite

doses result. Table 3 shows the existing and proposed SLBPS trip functions which provide protection for SLBs in this mode of plant operation.

As shown in Table 3, for SLBs inside containment, the existing SLBPs affords SI on High SL ΔP, with High-1 Pc serving as a backup trip signal. However, the proposed SLBPS affords no automatic SI initiation for these break locations in this mode of plant operation.'

The High-1 Pc is a backup signal, and may initiate SI depending on the initial plant conditions and break area.

If a break occurred outside containment, the existing SLBPS may, depending on initial plant conditions, initiate SI on the High SF (in two-out-of-three steamlines) coincident with the LLT_A trip, however the proposed SLBPS does not afford any SI trip, regardless of the initial plant conditions. The staff asked the licensee to justify the removal of SI initiating trips while in this mode of operation. The licensee was asked to show how adequate core shutdown margin is always assured without the addition of concentrated boric acid (from the boron injection tank (BIT) in the high-head safety injection system - HHSIS), and to demonstrate acceptable core cooling without the mass addition from the HHSIS to make up for the coolant shrinkage.

With respect to core shutdown margin, the licensee agreed to proposed technical specifications requiring the RCS boron concentration to be established at that required for adequate shutdown margin at the cold shutdown condition before blocking, during RCS heatups and cooldowns, the SI function associated with the

TABLE 3

Safety Injection and Steam Line Isolation Trips
Afforded by the Existing and Proposed SLBPSs
During RCS Heatup and Cooldown Operations

Break Location		SAFETY INJECTION		STEAM LINE ISOLATION	
		Existing SLBPS	Proposed SLBPS	Existing SLBPS	Proposed SLBPS
Break Upstream of NRV (Inside Containment)	Trip	High SL ΔP	None[3]	None[4]	High Neg SLPR
	Back Up Trips[2]	High-1 P_c High SF + LLT[1]	High-1 P_c	High-2 P_c High SF + LLT_A[1]	High-2 P_c
Breaks Downstream of NRV (Outside of Containment)	Trip	High SF + LLT	None	High SF + LLT_A	High Neg SLPR
	Back Up Trips[2]	None	None	None	None

[1]These trips would actuate only if the NRV failed.

[2]Manual SI and SLI is always available.

[3]The High-1 P_c trip may afford SI depending on initial plant conditions and break area. Therefore, High-1 P_c is listed as a backup trip.

[4]The High-2 P_c trip, sililar to the High-1 P_c trip discussed in Note 3, may afford backup SLI trip.

SLBPS. This action would guarantee that criticality would not occur following a cooldown to cold shutdown caused by a SLB.

The licensee and Westinghouse performed calculations to demonstrate that the core always remained covered and the RCS remained subcooled following any SLB without HHSIS flow during RCS cooldowns and heatups. These calculations, shown in References 5, 6, and 7, show that with the largest SLB outside containment which does not initiate SLI on High Negative SLPR, without mass addition from the charging system, SI accumulators or HHSIS, and with the lowest initial RCS pressure and highest initial RCS temperature, (to maximize the stored energy and minimize RCS subcooling), the following results were found:*

- The pressurizer drains in about 4 minutes.
- RCS pressure decays at about 47 psi/min.
- RCS temperature initially drops at about 16°F/min then at about 5°F/min.
- The RCS is initially about 10°F subcooled. During the blowdown, the subcooling is at least 20°-30°F until about 18 min., when the RCS is approaching saturation and the subcooling is only 10°F.

The results are bounding since:

- Smaller breaks result in lower cooldown rates, hence slower plant response.
- Larger breaks, outside containment, result in SLI thus a termination of the blowdown.
- Larger breaks, inside containment, would actuate the SI High-1 P_c trip, thus ensuring sufficient RCS subcooling.

---

*These results are for a 0.12 ft^2 break, outside containment with the RCS initially at a temperature and pressure of 547°F and 1000 psia, and the accumulators are isolated.

- If the initial RCS temperature were lower, or if pressure were higher, system response would be less severe and more subcooling would exist.

The analysis predicts that RCS subcooling is adequate for the first 18 minutes, but the operator must take action at that time. The following conservatisms and conclusions apply:

1. The RCS mass inventory is such that the core would remain covered, even if the cooldown proceeded to cold shutdown.

2. Subcooling conditions would be rapidly regained following reestablishment of normal charging flow at 18 minutes.

3. The initial RCS temperature used in the analysis is about 150°F above the normal temperature consistent with the initial RCS pressure used.

4. If charging flow were not lost at the time of the event, the pressurizer would not empty.

5. The following alarms would alert the operator to a loss of charging and/or the SLB
   - Charging pump discharge pressure low (<2200 psig)
   - Charging pump discharge flow low (<20 gpm)
   - Pressurizer control level deviation (≠5% of program level)
   - Pressurizer control level low (14%) (
   - Pressurizer control heater Group Automatic trip (≈14%)

With respect to this event, we conclude that these are sufficient indications for the operator to know charging flow has been lost, and he could regain the charging flow before saturation conditions occurred.

The staff also asked the licensee to compare the protection afforded by the existing and the proposed SLBPS for SLBs during heatup/cooldown.

The licensee, in Reference 5, provided Figure 3, below, which shows how the existing and proposed SLBPSs compare in providing protection for all SLBs downstream of the NRV (outside containment). The figure shows that SLI will occur for both systems if the break area is about 0.44 ft^2 and the initial RCS temperature is about 435°F. If RCS temperature is below 435°F, generally the existing SLBPS provides SLI for a larger spectrum of break areas than the proposed SLBPS.* If RCS temperature is above 435°F, the new SLBPS affords greater protection than the existing system.** Therefore, the existing SLBPS provides better system response to SLBs downstream of the MSIVs for temperature below 435°F, but the system response with the proposed SLBPS has been shown to be acceptable (i.e., adequate core cooling, acceptable offsite doses (no DNB occurs) and the system remains subcooled). Therefore, even though the proposed SLBPS affords less protection than the existing SLPBS (for certain initial RCS temperature), the results of a SLB with the proposed SLBPS are acceptable, and therefore the proposed SLBPS is acceptable for protection from SLBs during heatup and cooldown operation.

Technical Specifications

The licensee submitted, in Reference 7, proposed Technical Specifications which require the RCS to be borated to at least the cold shutdown boron

*For example if RCS temperature is 400°F, the existing system shuts the MSIVs for SLBs with area greater than about 0.90 ft^2, whereas the proposed system will not shut the MSIVs, regardless of the break area.

**For example, if RCS temperature is 500°F, the existing system shuts the MSIVs for SLBs with area greater than 0.34 ft^2, whereas the proposed system gives SLI for break areas greater than 0.18 ft^2. Therefore, at the RCS temperature of 500°F, the new system provides protection for break areas 0.18 to 0.34 ft^2, which the existing system does not.

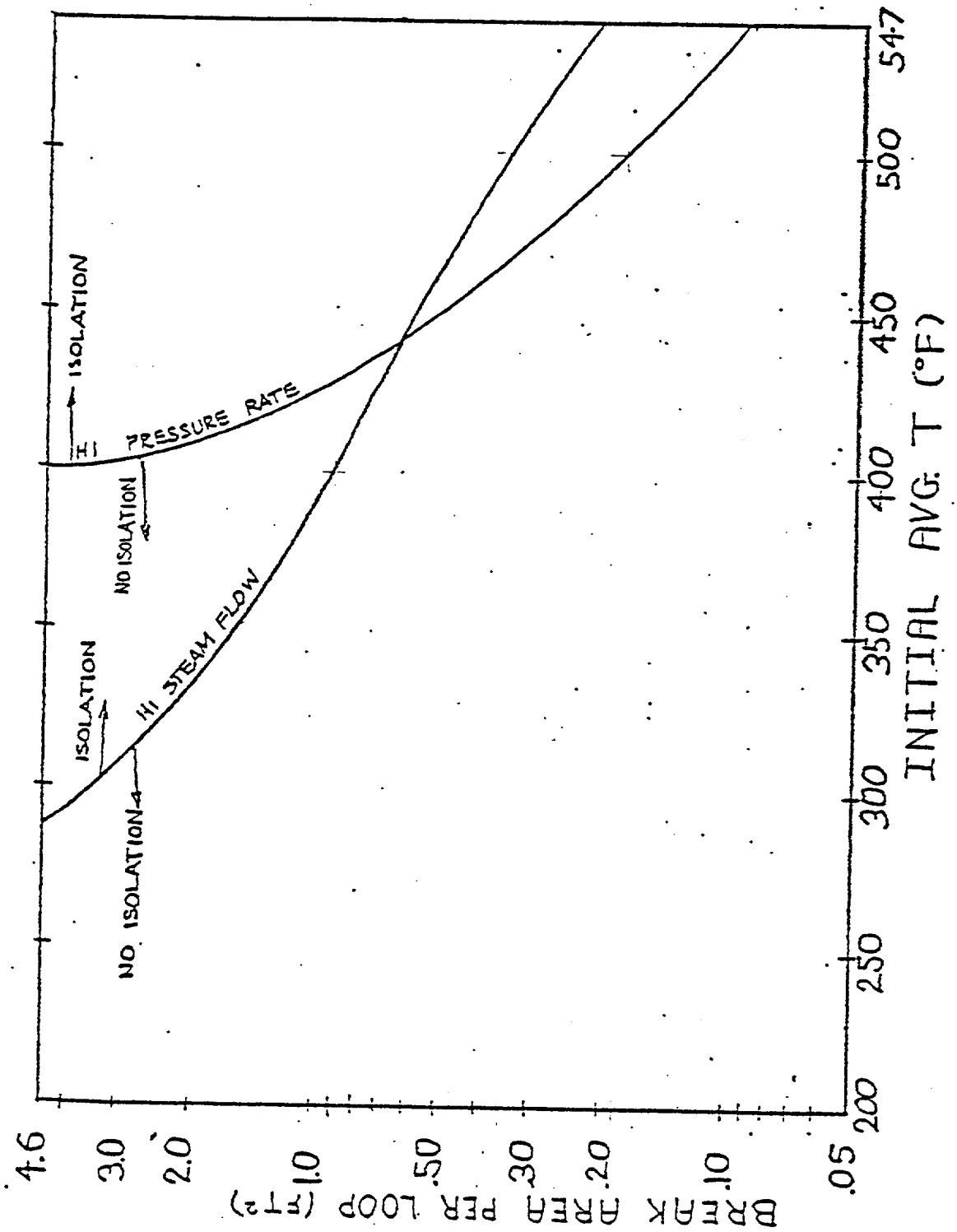

FIGURE 3 COMPARISON OF STEAMLINE BREAK PROTECTION SYSTEM RESPONSES

concentration prior to manually blocking the Low Pp SI signal, and then remain at or above this boron concentration whenever the Low P_p trip is blocked. Sihce this affords assurance that criticality will not occur due to a SLB with the proposed SLBPS, the proposed technical specification is acceptable.

Conclusion

Based on the preceding evaluation the staff concludes that the proposed SLBPS affords acceptable protection against SLB accidents while the RCS is at hot zero power or during power operations. Also, the present FSAR analysis bounds the plant behavior with the proposed SLBPS during these modes of operation.

With respect to SLBs during RCS cooldown and heatups, the staff concludes that the proposed SLBPS provides adequate protection, even though there may be a reduction in protection below that afforded by the present SLBPS. The licensee has demonstrated that even if the normal charging system were lost at the moment of the SLB which gives the "worst" system response, there is sufficient time and indications for the operator to regain normal charging, or establish charging via another path, before the RCS reaches a saturation condition. Therefore, the staff concludes that the proposed SLBPS affords acceptable protection for SLBs during RCS heatup and cooldowns. We also conclude that the proposed technical specifications regarding establishment of cold shutdown boron concentration prior to blocking the low P_p SI trip is necessary and acceptable.

In a recent trip to BVPS, the staff noted that the present procedures are applicable only during normal plant operations and we conclude that the plant emergency procedures must be amended to reflect the necessary operator actions in the event of an SLB during heatup and cooldown.

REFERENCES

1. Letter from Dusquesne Light Company (DLC), C. N. Dunn, to A. Schwencer, USNRC dated October 27, 1978.

2. Meeting minutes dated March 22, 1979.

3. Letter from C. N. Dunn, DLC to A. Schwencer, USNRC dated March 7, 1979.

4. Letter from C. N. Dunn, DLC to A. Schwencer, USNRC dated May 7, 1979.

5. Letter from C. N. Dunn, DLC to A. Schwencer, USNRC dated August 28, 1979.

6. Meeting minutes dated October 18, 1979.

7. Letter from C. N. Dunn, DLC, to A. Schwencer, USNRC, dated October 18, 1979.

ATTACHMENT 2

TECHNICAL EVALUATION OF THE ELECTRICAL, INSTRUMENTATION, AND CONTROL DESIGN ASPECTS OF THE TECHNICAL SPECIFICATION CHANGE FOR THE MAIN STEAMLINE BREAK PROTECTION SYSTEM OF THE BEAVER VALLEY NUCLEAR POWER PLANT, UNIT 1 (Docket No. 50-334)

James H. Cooper
EG&G, Inc.-Energy Measurements Group, San Ramon Operations

1.0 Introduction

In a letter to the U. S. Nuclear Regulatory Commission (NRC) dated 27 October 1978, the Duquesne Light Company requested an amendment to its operating license DPR-66 to incorporate a new steamline break protection system design for the Beaver Valley Nuclear Power Plant, Unit 1. The protection system changes provide protection against main steamline breaks and a range of loss-of-coolant accidents (LOCAs).

A description and discussion of the proposed change was presented to the NRC by the nuclear steam supply system designer (Westinghouse) and by the Licensee in Washington, D. C. on February 23, 1979. Additional written information forms part of the data evaluated (1, 2, 3, 4, 5, 6, 7, 8). The protection system design has been reviewed and recommended for approval as reported in the technical evaluation report EG&G 1183-4121 (1).

The purpose of this report is to evaluate the electrical, instrumentation, and control (EI&C) design aspects of the proposed technical specification change using the safety analysis of the license amendment request (2), IEEE Std.-279-1971 (9) criteria and the Code of Federal Regulations, Title 10 Part 50.

2.0 Description of the New Main Steamline Break Protection System

2.1 Introduction

In order to review the instrument changes to which this technical specification change applies, it is first necessary to describe the reactor protection functions that are involved.

2.2 The New Protection System

The new system is designed to protect the reactor in case of a main steamline break which would result in a sudden and large energy removal from the secondary loop of the reactor cooling system. The energy loss would, in turn cause a drop in primary coolant temperature and pressure, and because of the negative coefficient moderator would result in a positive reactivity effect. The licensee states in the safety

analysis that for a worst cast stuck rod condition, safety injection is required to unconditionally terminate power operation by the neutron poisoning effect of the boron of the safety injection solution.

2.3 The Licensee's Submittal

The licensee's submittal for a license change to incorporate a new main steamline break protection system included a safety analysis by the nuclear steam supply system designer that demonstrated that the new system meets the required criteria of 10 CFR 50 and 10 CFR 100. In the meeting in Washington, D. C. (Reference 4) the statement was made by the NSSS designer that the new instrument system is as comprehensive for protection as the former system, and that it is expected to be more reliable.

2.4 Instrument System

The instrument system for the main steamline break protection system consists of; the reactor trip system whose initiating signals are unchanged, the safety injection system with two additional initiating signals and the deletion of three initiating signals, the steam generator feedwater line isolation system which is unchanged and the main steam isolation stop valve trip system with the two initiating signals replaced by three new initiating signals. A new permissive, P-11 is also added with the change.

3.0 The Technical Specification Change Evaluation

The initiating signals for the plant parameters that are unchanged are covered by the existing plant technical specification. The new initiating signals developed in the safety analysis must be added to the technical specification by the amendment change. The initiating signals added for safety injection are low steamline pressure in any loop set at 500 psig, and high containment pressure at 1.5 psig. The channel check, calibration, test and surveillance modes are unchanged from the original system requirements. The initiating signals added for steam line isolation are low steamline pressure at 500 psig, high negative steam pressure rate at 100 psig/sec, and high containment pressure at 5 psig. There are three channels per loop with two channels required to trip, and applicable in all three operating modes for all the added steam line isolation signals. The added signal set points are listed in the revised technical specification and the values are the ones used in the safety analysis. The set points and allowable values are in a plausible range to meet the described conditions.

The response times of the added signals are noted in the safety analysis and are added to the revised technical specification under the appropriate reactor safety function. The response times are in the same range as the ones replaced.

The limiting condition for operation in the revised technical specification primarily involves shutdown margin and (N-1) cooling loop operation which are not in the domain of the report, or will be reviewed for a subsequent application.

The new permissive, P-11 is an interlock for the engineered safety features system and is set at a pressure of 2010 psig for the pressurizer, which corresponds approximately to full power.

4.0 Conclusions

In reviewing the revised technical specification it was difficult to follow the requirements with respect to shutdown margin, boration levels required and the corresponding operating mode for these levels. Since the (N-1) cooling loop operating mode is not being reviewed for approval at this time, references to two loop conditions in the original submittal add to the confusion. It is recommended that this aspect of the technical specification be reviewed by the appropriate branch for consistency.

The revised technical specification covers the plant variables and initiating signals required in the safety analysis presented by the licensee. They are found to be of appropriate magnitude and redundancy to mitigate the consequences of a main steamline break accident, and approval is recommended.

References

1. EG&G 1183-4142: Technical Evaluation of the Electrical Instrumentation and Control Design Aspects of the Proposed Main Steamline Break Protection System of the Beaver Valley Nuclear Power Plant Unit 1, April 1980.

2. Duquesne Light Company (C. N. Dunn) letter to NRC (A. Schwencer), "Duquesne Docket No. 50-334 License Amendment Request, Beaver Valley Power Station, Unit No. 1", dated 27 October 1978.

3. Duquesne Light Company License Amendment Request, Technical Specification Revision Beaver Valley Power Station Unit No. 1, Revised August 24, 1978/October 18, 1979.

4. Westinghouse/Duquesne Logic Diagrams, presented in Washington, D. C. 23 February 1979.

5. Westinghouse WCAP-7672: Solid State Logic Protection System Description, June 1971.

6. Westinghouse WCAP-7706: An Evaluation of Solid-State Logic Reactor Protection in Anticipated Transients, July 1971.

7. Westinghouse WCAP-7819: Nuclear Instrumentation System Isolation Amplifier, April 1975.

8. Westinghouse WCAP-8904: Westinghouse Emergency Core Cooling System Evaluation Model for Analyzing (N-1) Loop Operation of Plants with Loop Isolation Valves, December 1976.

9. IEEE Std-279-1971: Criteria for Protection Systems for Nuclear Power Generating Stations.

10. Code of Federal Regulations, Title 10, Part 50.46: Acceptance Criteria for Emergency Core Cooling Systems for Light Water Nuclear Power Reactors, January 1, 1978.

11. Code of Federal Regulations, Title 10, Part 50, Appendix A: General Design Criteria for Nuclear Power Plants, January 1, 1978.

12. Duquesne Light Company, Beaver Valley Final Safety Evaluation Report (FSAR), October 1976.

7590-01

UNITED STATES NUCLEAR REGULATORY COMMISSION

DOCKET NO. 50-334

DUQUESNE LIGHT COMPANY

OHIO EDISON COMPANY

PENNSYLVANIA POWER COMPANY

NOTICE OF ISSUANCE OF AMENDMENT TO FACILITY OPERATING LICENSE

The U. S. Nuclear Regulatory Commission (the Commission) has issued Amendment No. 30 to Facility Operating License No. DPR-66 issued to Duquesne Light Company, Ohio Edison Company, and Pennsylvania Power Company (the licensees), which revised Technical Specifications for operation of the Beaver Valley Power Station, Unit No. 1 (the facility) located in Beaver County, Pennsylvania. The amendment is effective as of the date of issuance.

The amendment revises the radiological Technical Specifications in Appendix A to reflect the installation of a new Steamline Break Protection System.

The application for the amendment complies with the standards and requirements of the Atomic Energy Act of 1954, as amended (the Act), and the Commission's rules and regulations. The Commission has made appropriate findings as required by the Act and the Commission's rules and regulations in 10 CFR Chapter I, which are set forth in the license amendment. Prior public notice of this amendment was not required since this amendment does not involve a significant hazards consideration.

8009260192

The Commission has determined that the issuance of this amendment will not result in any significant environmental impact and that pursuant to 10 CFR §51.5(d)(4) an environmental impact statement or negative declaration and environmental impact appraisal need not be prepared in connection with issuance of this amendment.

For further details with respect to this action, see (1) the application for amendment dated October 27, 1978 as supplemented by letters dated March 7, May 7, August 28 and October 18, 1979, (2) Amendment No. 30 to License No. DPR-66 and (3) the Commission's related Safety Evaluation. All of these items are available for public inspection at the Commission's Public Document Room, 1717 H Street, N.W., Washington, D.C. and at the B. F. Jones Memorial Library, 663 Franklin Avenue, Aliquippa, Pennsylvania 15001. A copy of items (2) and (3) may be obtained upon request addressed to the U. S. Nuclear Regulatory Commission, Washington, D.C. 20555, Attention: Director, Division of Licensing.

Dated at Bethesda, Maryland, this 10th day of September, 1980.

FOR THE NUCLEAR REGULATORY COMMISSION

Steven A. Varga, Chief
Operating Reactors Branch #1
Division of Licensing