ComEd®

Commonwealth Edison Company
1400 Opus Place
Downers Grove, IL 60515-5701

www.exeloncorp.com

An Exelon Company

10 CFR 50.4(b)(6)
10 CFR 50.71(e)

ZRA2000-22

October 30, 2000

U. S. Nuclear Regulatory Commission
ATTN: Document Control Desk
Washington, DC 20555-0001

Zion Nuclear Power Station, Units 1 and 2
Facility Operating License Nos. DPR-39 and DPR-48
NRC Docket Nos. 50-295 and 50-304

Subject: Submittal of Defueled Safety Analysis Report Update

Reference: Commonwealth Edison (ComEd) Company letter, "Submittal of Defueled Safety Analysis Report," dated November 10, 1998

Pursuant to the requirements of 10 CFR50.71, "Maintenance of records, making of reports," paragraph (e), we are submitting Revision 1 of the Defueled Safety Analysis Report (DSAR) for Zion Nuclear Power Station (ZNPS), Units 1 and 2. In accordance with 10 CFR 50.71(e)(4), this DSAR update is being submitted within 24 months of the previous ZNPS DSAR revision which was submitted in the Reference letter. Accordingly, this revision is due to be submitted by November 10, 2000.

The changes to the DSAR reflect administrative changes (i.e., editorial and DSAR text changes) and plant design changes. Revision 1 includes changes made from January 20, 1999, through August 31, 2000.

Revision 1 of the ZNPS DSAR includes changes made under the provisions of 10 CFR 50.59, "Changes, tests, and experiments." We have evaluated the DSAR changes in accordance with 10 CFR 50.59 and concluded the changes do not involve an unreviewed safety question. Attachment 1 identifies the changes made under the provisions of 10 CFR 50.59 but not previously submitted to the NRC.

A001

Attachment 2 contains the update to the ZNPS DSAR. As required by 10 CFR 50.71(e), Revision 1 consists of replacement pages to be inserted into Revision 0 of the DSAR. Page change instructions are provided. Changes to the DSAR are indicated by revision bars.

As Director – Licensing, I certify that the information in this submittal accurately presents changes made since the previous submittal necessary to reflect information and analyses submitted to the NRC or prepared pursuant to NRC requirements, and changes made under the provisions of 10 CFR 50.59 but not previously submitted to the NRC.

Pursuant to 10 CFR 50.4, "Written communications," paragraph (b)(6), one signed original and ten copies of this update to the ZNPS DSAR are being provided to the NRC Document Control Desk and one copy to the NRC Region III office.

If you have any questions about this letter, please contact K. A. Ainger at (630) 663-7350.

Respectfully,

R. M. Krich
Director – Licensing

Attachments

cc: Regional Administrator – NRC Region III

ATTACHMENT 1

Changes Made Under the Provisions of 10 CFR 50.59 But Not Previously Submitted

Section	Description of Change
3.2.2, 3.9.2, 4.3.1, 4.5.3, 5.4, Tables 5-3, 5-4, and 5-7	Clarify systems, structures and components classified as Important to the Defueled Condition (ITDC). Update Chapter 5 to reflect analysis revisions.
3.9.1	Add discussion that new fuel assemblies can also be stored in NRC approved shipping containers in various approved locations.
1.2.5, 3.9, 3.10, 3.11, Tables 3-3, 3-9, 3-10, 3-11, 3-12, 3-13, 3-14, Figures 3-32, 3-39, 3-39A, 3-40, 3-41, 3-42, 3-42A, 3-45A, 3-46, and 3-47, 4.6.2, Table 4-3, 5.1.1,	Revision to reflect the Spent Fuel Nuclear Island (SFNI) design change.
3.9.4	Revise normal temperature range for the Spent Fuel Pool.
6.5.8, 7.1	Provide clarification regarding site quality assurance requirements.
4.7	Relocate sealed source information into the DSAR.
2.3.3, Tables 2-12 and 2-13, 6.5.1	Update meteorological recorder discussion. Revise Emergency Plan description to reflect approval of the Defueled Station Emergency Plan.
3.2.2, 3.9, 3.10, 3.12	Revise discussion of systems, structures, and components classified as Important to the Defueled Condition (ITDC). Add information regarding equipment lightning protection.
3.9.2	Add statement that spent fuel pool level is checked once per day.
7	Delete Chapter 7.
4.5, 4.6	Revise DSAR to reflect latest revision of the Offsite Dose Calculation Manual (ODCM).
3.9.2, 3.9.4, 5.1.1, 5.1.2, Table 5-5	Clarify the maximum height of a fuel assembly stored in the spent fuel pool.
Table 4-2	Add clarifying information regarding how the requirements of 10 CFR 50.68(b)(6) are satisfied.
Figures 1-7, 1-12, and 1-14	Update DSAR controlled drawings to reflect latest revisions.

ATTACHMENT 2

Zion Nuclear Power Station Defueled Safety Analysis Report Revision 1

To perform the October 2000 Zion Defueled Safety Analysis Report (DSAR) update, please remove pages dated August 1998 and insert pages dated October 2000 as follows:

SECTION	REMOVE	INSERT
List of Effective Pages	LOEP-2	LOEP-2
List of Effective Pages	LOEP-3	LOEP-3
List of Effective Pages	LOEP-4	LOEP-4
List of Effective Pages	LOEP-5	LOEP-5
List of Effective Pages	LOEP-6	LOEP-6
List of Effective Pages	LOEP-7	LOEP-7
Master Table of Contents	page 3-iv	page 3-iv
Master Table of Contents	page 3-v	page 3-v
Master Table of Contents	page 6-i	page 6-i
Master Table of Contents	page 7-i	page 7-i
Chapter 1	page 1-7	page 1-7
Chapter 1	Figure 1-7	Figure 1-7
Chapter 1	Figure 1-12	Figure 1-12
Chapter 1	Figure 1-14	Figure 1-14
Chapter 2	page 2-8	page 2-8
Chapter 2	page 2-9	page 2-9
Chapter 2	Table 2-12	Table 2-12
Chapter 2	Table 2-13	Table 2-13
Chapter 3	page 3-iv	page 3-iv
Chapter 3	page 3-v	page 3-v
Chapter 3	page 3-vi	page 3-vi
Chapter 3	page 3-vii	page 3-vii
Chapter 3	page 3-viii	page 3-viii
Chapter 3	page 3-8	page 3-8
Chapter 3	page 3-26	page 3-26
Chapter 3	page 3-27	pages 3-27, 3-27a
Chapter 3	page 3-28	page 3-28
Chapter 3	page 3-29	page 3-29
Chapter 3	page 3-31	page 3-31
Chapter 3	page 3-35	page 3-35
Chapter 3	page 3-36	page 3-36
Chapter 3	page 3-37	page 3-37
Chapter 3	page 3-38	page 3-38
Chapter 3	page 3-43	pages 3-43, 3-43a, 3-43b

SECTION	REMOVE	INSERT
Chapter 3	page 3-44	page 3-44
Chapter 3	page 3-45	page 3-45
Chapter 3	page 3-46	page 3-46
Chapter 3	page 3-47	page 3-47
Chapter 3	page 3-48	page 3-48
Chapter 3	page 3-50	page 3-50
Chapter 3	page 3-51	page 3-51
Chapter 3	page 3-52	pages 3-52, 3-52a
Chapter 3	page 3-53	page 3-53
Chapter 3	page 3-55	pages 3-55, 3-55a
Chapter 3	page 3-56	page 3-56
Chapter 3	page 3-58	page 3-58
Chapter 3	page 3-59	page 3-59
Chapter 3	page 3-60	page 3-60
Chapter 3	page 3-61	page 3-61
Chapter 3	Table 3-3	Table 3-3
Chapter 3	Table 3-9 (1of 3)	Table 3-9 (1of 3)
Chapter 3	Table 3-9 (2 of 3)	Table 3-9 (2 of 3)
Chapter 3	Table 3-10	Table 3-10
Chapter 3	Table 3-11	Table 3-11
Chapter 3	Table 3-12	Table 3-12
Chapter 3	Table 3-13	Table 3-13
Chapter 3	Table 3-14	Table 3-14
Chapter 3	Figure 3-32	Figure 3-32
Chapter 3	Figure 3-39	Figures 3-39, 3-39A
Chapter 3	Figure 3-40	Figure 3-40
Chapter 3	Figure 3-41	Figure 3-41
Chapter 3	Figure 3-42	Figures 3-42, 3-42A
Chapter 3		Figure 3-45A
Chapter 3	Figure 3-46	Figure 3-46
Chapter 3	Figure 3-47	Figure 3-47
Chapter 4	page 4-2	page 4-2
Chapter 4	page 4-3	page 4-3
Chapter 4	page 4-7	page 4-7
Chapter 4	page 4-10	page 4-10
Chapter 4	page 4-11	page 4-11
Chapter 4	page 4-12	page 4-12
Chapter 4	page 4-13	page 4-13
Chapter 4	page 4-14	page 4-14
Chapter 4	page 4-15	page 4-15
Chapter 4	page 4-16	page 4-16
Chapter 4	page 4-17	page 4-17
Chapter 4	Table 4-2	Table 4-2
Chapter 4	Table 4-3	Table 4-3
Chapter 5	page 5-2	page 5-2

SECTION	REMOVE	INSERT
Chapter 5	page 5-3	page 5-3
Chapter 5	page 5-4	page 5-4
Chapter 5	page 5-5	page 5-5
Chapter 5	page 5-8	page 5-8
Chapter 5	Table 5-3	Table 5-3
Chapter 5	Table 5-4	Table 5-4
Chapter 5	Table 5-5	Table 5-5
Chapter 5	Table 5-7	Table 5-7
Chapter 6	page 6-i	page 6-i
Chapter 6	page 6-3	page 6-3
Chapter 6	page 6-4	page 6-4
Chapter 6	page 6-5	page 6-5
Chapter 7	page 7-i	page 7-i
Chapter 7	page 7-1	page 7-1
Chapter 7	page 7-2	page 7-2

LIST OF EFFECTIVE PAGES

PAGE	DATE	PAGE	DATE
Controlled Copy Cover Sheet	AUGUST 1998	Figure 1-8	AUGUST 1998
List of Effective Pages Tab		Figure 1-9	AUGUST 1998
LOEP-2	OCTOBER 2000	Figure 1-10	AUGUST 1998
LOEP-3	OCTOBER 2000	Figure 1-11	AUGUST 1998
LOEP-4	OCTOBER 2000	Figure 1-12	OCTOBER 2000
LOEP-5	OCTOBER 2000	Figure 1-13	AUGUST 1998
LOEP-6	OCTOBER 2000	Figure 1-14	OCTOBER 2000
LOEP-7	OCTOBER 2000	Figure 1-15	AUGUST 1998
Master Table of Contents Tab		Figure 1-16	AUGUST 1998
1-i	AUGUST 1998	Figure 1-17	AUGUST 1998
2-i	AUGUST 1998	Chapter 2 Tab	
2-ii	AUGUST 1998	2-i	AUGUST 1998
3-i	AUGUST 1998	2-ii	AUGUST 1998
3-ii	AUGUST 1998	2-iii	AUGUST 1998
3-iii	AUGUST 1998	2-iv	AUGUST 1998
3-iv	OCTOBER 2000	2-v	AUGUST 1998
3-v	OCTOBER 2000	2-1	AUGUST 1998
4-i	AUGUST 1998	2-2	AUGUST 1998
4-ii	AUGUST 1998	2-3	AUGUST 1998
5-i	AUGUST 1998	2-4	AUGUST 1998
6-i	OCTOBER 2000	2-5	AUGUST 1998
7-i	OCTOBER 2000	2-6	AUGUST 1998
Chapter 1 Tab		2-7	AUGUST 1998
1-i	AUGUST 1998	2-8	OCTOBER 2000
1-ii	AUGUST 1998	2-9	OCTOBER 2000
1-iii	AUGUST 1998	2-10	AUGUST 1998
1-1	AUGUST 1998	2-11	AUGUST 1998
1-2	AUGUST 1998	2-12	AUGUST 1998
1-3	AUGUST 1998	2-13	AUGUST 1998
1-4	AUGUST 1998	2-14	AUGUST 1998
1-5	AUGUST 1998	2-15	AUGUST 1998
1-6	AUGUST 1998	2-16	AUGUST 1998
1-7	OCTOBER 2000	2-17	AUGUST 1998
1-8	AUGUST 1998	2-18	AUGUST 1998
1-9	AUGUST 1998	2-19	AUGUST 1998
Table 1-1(1)	AUGUST 1998	2-20	AUGUST 1998
Figure 1-1	AUGUST 1998	2-21	AUGUST 1998
Figure 1-2	AUGUST 1998	2-22	AUGUST 1998
Figure 1-3	AUGUST 1998	2-23	AUGUST 1998
Figure 1-4	AUGUST 1998	2-24	AUGUST 1998
Figure 1-5	AUGUST 1998	2-25	AUGUST 1998
Figure 1-6	AUGUST 1998	2-26	AUGUST 1998
Figure 1-7	OCTOBER 2000	2-27	AUGUST 1998
		Table 2-1(1)	AUGUST 1998

LIST OF EFFECTIVE PAGES

PAGE	DATE	PAGE	DATE
Table 2-2(1)	AUGUST 1998	Figure 2-14	AUGUST 1998
Table 2-3(1)	AUGUST 1998	Figure 2-15	AUGUST 1998
Table 2-4(1)	AUGUST 1998	Figure 2-16	AUGUST 1998
Table 2-4(2)	AUGUST 1998	Figure 2-17	AUGUST 1998
Table 2-5(1)	AUGUST 1998	Figure 2-18	AUGUST 1998
Table 2-5(2)	AUGUST 1998	Figure 2-19	AUGUST 1998
Table 2-6(1)	AUGUST 1998	Figure 2-20	AUGUST 1998
Table 2-7(1)	AUGUST 1998	Figure 2-21	AUGUST 1998
Table 2-7(2)	AUGUST 1998	Figure 2-22	AUGUST 1998
Table 2-7(3)	AUGUST 1998	Figure 2-23	AUGUST 1998
Table 2-8(1)	AUGUST 1998	Figure 2-24	AUGUST 1998
Table 2-8(2)	AUGUST 1998	Figure 2-25	AUGUST 1998
Table 2-9(1)	AUGUST 1998	Figure 2-26	AUGUST 1998
Table 2-9(2)	AUGUST 1998	Appendix 2A Cover Sheet	AUGUST 1998
Table 2-10(1)	AUGUST 1998	2A-1	AUGUST 1998
Table 2-11(1)	AUGUST 1998	2A-2	AUGUST 1998
Table 2-12(1)	OCTOBER 2000	2A-3	AUGUST 1998
Table 2-13(1)	OCTOBER 2000	2A-4	AUGUST 1998
Table 2-14(1)	AUGUST 1998	2A-5	AUGUST 1998
Table 2-15(1)	AUGUST 1998	2A-6	AUGUST 1998
Table 2-16(1)	AUGUST 1998	2A-7	AUGUST 1998
Table 2-17(1)	AUGUST 1998	2A-8	AUGUST 1998
Table 2-18(1)	AUGUST 1998	Appendix 2B Cover Sheet	AUGUST 1998
Table 2-19(1)	AUGUST 1998	2B-1	AUGUST 1998
Table 2-20(1)	AUGUST 1998	2B-2	AUGUST 1998
Table 2-20(2)	AUGUST 1998	2B-3	AUGUST 1998
Table 2-21(1)	AUGUST 1998	Appendix 2C Cover Sheet	AUGUST 1998
Table 2-22(1)	AUGUST 1998	2C-i	AUGUST 1998
Table 2-22(2)	AUGUST 1998	2C-1	AUGUST 1998
Table 2-23(1)	AUGUST 1998	2C-2	AUGUST 1998
Table 2-23(2)	AUGUST 1998	2C-3	AUGUST 1998
Figure 2-1	AUGUST 1998	2C-4	AUGUST 1998
Figure 2-2	AUGUST 1998	2C-5	AUGUST 1998
Figure 2-3	AUGUST 1998	2C-6	AUGUST 1998
Figure 2-4	AUGUST 1998	2C-7	AUGUST 1998
Figure 2-5	AUGUST 1998	2C-8	AUGUST 1998
Figure 2-6	AUGUST 1998	2C-9	AUGUST 1998
Figure 2-7	AUGUST 1998	2C-10	AUGUST 1998
Figure 2-8	AUGUST 1998	2C-11	AUGUST 1998
Figure 2-9	AUGUST 1998	2C-12	AUGUST 1998
Figure 2-10	AUGUST 1998	2C-13	AUGUST 1998
Figure 2-11	AUGUST 1998	2C-14	AUGUST 1998
Figure 2-12	AUGUST 1998	2C-15	AUGUST 1998
Figure 2-13	AUGUST 1998	2C-16	AUGUST 1998

LIST OF EFFECTIVE PAGES

PAGE	DATE	PAGE	DATE
2C-17	AUGUST 1998	2C-61	AUGUST 1998
2C-18	AUGUST 1998	2C-62	AUGUST 1998
2C-19	AUGUST 1998	2C-63	AUGUST 1998
2C-20	AUGUST 1998	2C-64	AUGUST 1998
2C-21	AUGUST 1998	2C-65	AUGUST 1998
2C-22	AUGUST 1998	2C-66	AUGUST 1998
2C-23	AUGUST 1998	2C-67	AUGUST 1998
2C-24	AUGUST 1998	2C-68	AUGUST 1998
2C-25	AUGUST 1998	2C-69	AUGUST 1998
2C-26	AUGUST 1998	2C-70	AUGUST 1998
2C-27	AUGUST 1998	2C-71	AUGUST 1998
2C-28	AUGUST 1998	2C-72	AUGUST 1998
2C-29	AUGUST 1998	2C-73	AUGUST 1998
2C-30	AUGUST 1998	2C-74	AUGUST 1998
2C-31	AUGUST 1998	2C-75	AUGUST 1998
2C-32	AUGUST 1998	2C-76	AUGUST 1998
2C-33	AUGUST 1998	2C-77	AUGUST 1998
2C-34	AUGUST 1998	2C-78	AUGUST 1998
2C-35	AUGUST 1998	2C-79	AUGUST 1998
2C-36	AUGUST 1998	2C-80	AUGUST 1998
2C-37	AUGUST 1998	2C-81	AUGUST 1998
2C-38	AUGUST 1998	2C-82	AUGUST 1998
2C-39	AUGUST 1998	2C-83	AUGUST 1998
2C-40	AUGUST 1998	2C-84	AUGUST 1998
2C-41	AUGUST 1998	2C-85	AUGUST 1998
2C-42	AUGUST 1998	Chapter 3 Tab	
2C-43	AUGUST 1998	3-i	AUGUST 1998
2C-44	AUGUST 1998	3-ii	AUGUST 1998
2C-45	AUGUST 1998	3-iii	AUGUST 1998
2C-46	AUGUST 1998	3-iv	OCTOBER 2000
2C-47	AUGUST 1998	3-v	OCTOBER 2000
2C-48	AUGUST 1998	3-vi	OCTOBER 2000
2C-49	AUGUST 1998	3-vii	OCTOBER 2000
2C-50	AUGUST 1998	3-viii	OCTOBER 2000
2C-51	AUGUST 1998	3-1	AUGUST 1998
2C-52	AUGUST 1998	3-2	AUGUST 1998
2C-53	AUGUST 1998	3-3	AUGUST 1998
2C-54	AUGUST 1998	3-4	AUGUST 1998
2C-55	AUGUST 1998	3-5	AUGUST 1998
2C-56	AUGUST 1998	3-6	AUGUST 1998
2C-57	AUGUST 1998	3-7	AUGUST 1998
2C-58	AUGUST 1998	3-8	OCTOBER 2000
2C-59	AUGUST 1998	3-9	AUGUST 1998
2C-60	AUGUST 1998	3-10	AUGUST 1998

LIST OF EFFECTIVE PAGES

PAGE	DATE	PAGE	DATE
3-11	AUGUST 1998	3-52	OCTOBER 2000
3-12	AUGUST 1998	3-52a	OCTOBER 2000
3-13	AUGUST 1998	3-53	OCTOBER 2000
3-14	AUGUST 1998	3-54	AUGUST 1998
3-15	AUGUST 1998	3-55	OCTOBER 2000
3-16	AUGUST 1998	3-55a	OCTOBER 2000
3-17	AUGUST 1998	3-56	OCTOBER 2000
3-18	AUGUST 1998	3-57	AUGUST 1998
3-19	AUGUST 1998	3-58	OCTOBER 2000
3-20	AUGUST 1998	3-59	OCTOBER 2000
3-21	AUGUST 1998	3-60	OCTOBER 2000
3-22	AUGUST 1998	3-61	OCTOBER 2000
3-23	AUGUST 1998	Table 3-1(1)	AUGUST 1998
3-24	AUGUST 1998	Table 3-2(1)	AUGUST 1998
3-25	AUGUST 1998	Table 3-3(1)	OCTOBER 2000
3-26	OCTOBER 2000	Table 3-4(1)	AUGUST 1998
3-27	OCTOBER 2000	Table 3-4(2)	AUGUST 1998
3-27a	OCTOBER 2000	Table 3-4(3)	AUGUST 1998
3-28	OCTOBER 2000	Table 3-4(4)	AUGUST 1998
3-29	OCTOBER 2000	Table 3-4(5)	AUGUST 1998
3-30	AUGUST 1998	Table 3-5(1)	AUGUST 1998
3-31	OCTOBER 2000	Table 3-6(1)	AUGUST 1998
3-32	AUGUST 1998	Table 3-7(1)	AUGUST 1998
3-33	AUGUST 1998	Table 3-8(1)	AUGUST 1998
3-34	AUGUST 1998	Table 3-9(1)	OCTOBER 2000
3-35	OCTOBER 2000	Table 3-9(2)	OCTOBER 2000
3-36	OCTOBER 2000	Table 3-9(3)	AUGUST 1998
3-37	OCTOBER 2000	Table 3-10(1)	OCTOBER 2000
3-38	OCTOBER 2000	Table 3-11(1)	OCTOBER 2000
3-39	AUGUST 1998	Table 3-12(1)	OCTOBER 2000
3-40	AUGUST 1998	Table 3-13(1)	OCTOBER 2000
3-41	AUGUST 1998	Table 3-14(1)	OCTOBER 2000
3-42	AUGUST 1998	Table 3-15(1)	AUGUST 1998
3-43	OCTOBER 2000	Figure 3-1	AUGUST 1998
3-43a	OCTOBER 2000	Figure 3-2	AUGUST 1998
3-43b	OCTOBER 2000	Figure 3-3	AUGUST 1998
3-44	OCTOBER 2000	Figure 3-4	AUGUST 1998
3-45	OCTOBER 2000	Figure 3-5	AUGUST 1998
3-46	OCTOBER 2000	Figure 3-6	AUGUST 1998
3-47	OCTOBER 2000	Figure 3-7	AUGUST 1998
3-48	OCTOBER 2000	Figure 3-8	AUGUST 1998
3-49	AUGUST 1998	Figure 3-9	AUGUST 1998
3-50	OCTOBER 2000	Figure 3-10	AUGUST 1998
3-51	OCTOBER 2000	Figure 3-11	AUGUST 1998

LIST OF EFFECTIVE PAGES

PAGE	DATE	PAGE	DATE
Figure 3-12	AUGUST 1998	4-iv	AUGUST 1998
Figure 3-13	AUGUST 1998	4-1	AUGUST 1998
Figure 3-14	AUGUST 1998	4-2	OCTOBER 2000
Figure 3-15	AUGUST 1998	4-3	OCTOBER 2000
Figure 3-16	AUGUST 1998	4-4	AUGUST 1998
Figure 3-17	AUGUST 1998	4-5	AUGUST 1998
Figure 3-18	AUGUST 1998	4-6	AUGUST 1998
Figure 3-19	AUGUST 1998	4-7	OCTOBER 2000
Figure 3-20	AUGUST 1998	4-8	AUGUST 1998
Figure 3-21	AUGUST 1998	4-9	AUGUST 1998
Figure 3-22	AUGUST 1998	4-10	OCTOBER 2000
Figure 3-23	AUGUST 1998	4-11	OCTOBER 2000
Figure 3-24	AUGUST 1998	4-12	OCTOBER 2000
Figure 3-25	AUGUST 1998	4-13	OCTOBER 2000
Figure 3-26	AUGUST 1998	4-14	OCTOBER 2000
Figure 3-27	AUGUST 1998	4-15	OCTOBER 2000
Figure 3-28	AUGUST 1998	4-16	OCTOBER 2000
Figure 3-29	AUGUST 1998	4-17	OCTOBER 2000
Figure 3-30	AUGUST 1998	Table 4-1(1)	AUGUST 1998
Figure 3-31	AUGUST 1998	Table 4-2(1)	OCTOBER 2000
Figure 3-32	OCTOBER 2000	Table 4-3(1)	OCTOBER 2000
Figure 3-33	AUGUST 1998	Figure 4-1	AUGUST 1998
Figure 3-34	AUGUST 1998	Chapter 5 Tab	
Figure 3-35	AUGUST 1998	5-i	AUGUST 1998
Figure 3-36	AUGUST 1998	5-ii	AUGUST 1998
Figure 3-37	AUGUST 1998	5-iii	AUGUST 1998
Figure 3-38	AUGUST 1998	5-1	AUGUST 1998
Figure 3-39	OCTOBER 2000	5-2	OCTOBER 2000
Figure 3-39A	OCTOBER 2000	5-3	OCTOBER 2000
Figure 3-40	OCTOBER 2000	5-4	OCTOBER 2000
Figure 3-41	OCTOBER 2000	5-5	OCTOBER 2000
Figure 3-42	OCTOBER 2000	5-6	AUGUST 1998
Figure 3-42A	OCTOBER 2000	5-7	AUGUST 1998
Figure 3-43	AUGUST 1998	5-8	OCTOBER 2000
Figure 3-44	AUGUST 1998	Table 5-1(1)	AUGUST 1998
Figure 3-45	AUGUST 1998	Table 5-2(1)	AUGUST 1998
Figure 3-45A	OCTOBER 2000	Table 5-3(1)	OCTOBER 2000
Figure 3-46	OCTOBER 2000	Table 5-4(1)	OCTOBER 2000
Figure 3-47	OCTOBER 2000	Table 5-5(1)	OCTOBER 2000
Figure 3-48	AUGUST 1998	Table 5-6(1)	AUGUST 1998
Chapter 4 Tab		Table 5-7(1)	OCTOBER 2000
4-i	AUGUST 1998	Figure 5-1	AUGUST 1998
4-ii	AUGUST 1998	Figure 5-2	AUGUST 1998
4-iii	AUGUST 1998	Figure 5-3	AUGUST 1998

LIST OF EFFECTIVE PAGES

PAGE	DATE	PAGE	DATE
Figure 5-4	AUGUST 1998		
Chapter 6 Tab			
6-i	OCTOBER 2000		
6-1	AUGUST 1998		
6-2	AUGUST 1998		
6-3	OCTOBER 2000		
6-4	OCTOBER 2000		
6-5	OCTOBER 2000		
Chapter 7 Tab			
7-i	OCTOBER 2000		
7-1	OCTOBER 2000		
7-2	OCTOBER 2000		

TABLE OF CONTENTS

SECTION	TITLE	PAGE
3.9.4.4	Spent Fuel Pool Make-Up Capability	3-38
3.9.4.5	Design Features Important to the Defueled Condition	3-38
3.9.5	Spent Fuel Cask Drop Analysis	3-39
3.9.5.1	Objective of Analysis	3-39
3.9.5.2	Statement of Physical Problem	3-40
3.9.5.3	Calculational Methods and Other Assumptions	3-41
3.9.5.4	Results	3-42
3.10	PLANT SUPPORT SYSTEMS	3-43a
3.10.1	Spent Fuel Pool Secondary Loop Cooling System	3-43a
3.10.1.1	Design Basis	3-43a
3.10.1.2	System Description	3-43a
3.10.1.3	Components	3-43b
3.10.1.3.1	Cooling Tower	3-43b
3.10.1.3.2	Cooling Pumps	3-43b
3.10.1.4	Design Feature Important to the Defueled Condition	3-43b
3.10.2	Service Water System	3-46
3.10.2.1	Design Basis	3-46
3.10.2.2	System Description	3-47
3.10.2.3	Design Features Important to the Defueled Condition	3-48
3.10.3	Ventilation Systems	3-49
3.10.3.1	Control Room Heating, Ventilating, and Air Conditioning System	3-49
3.10.3.1.1	Design Basis	3-49
3.10.3.1.2	System Description	3-49
3.10.3.1.3	Normal Operation	3-49
3.10.3.1.4	Design Features Important to the Defueled Condition	3-50
3.10.3.2	Auxiliary Building Ventilation	3-50
3.10.3.2.1	Design Basis	3-50
3.10.3.2.2	Normal Operation	3-50
3.10.3.2.3	Design Features Important to the Defueled Condition	3-51
3.10.3.3	Containment Purge	3-51
3.10.3.3.1	Design Basis	3-51
3.10.3.3.2	Normal Operation	3-51

TABLE OF CONTENTS

SECTION	TITLE	PAGE
3.10.3.3.3	Design Features Important to the Defueled Condition	3-52
3.10.3.4	Auxiliary Ventilation Systems	3-52
3.10.3.5	Fuel Building Ventilation	3-52a
3.10.4	Fire Protection System	3-52
3.10.5	Operating Control Stations	3-53
3.10.5.1	General Layout	3-53
3.10.5.2	Design Basis	3-53
3.10.5.2.1	Control Room Design	3-53
3.10.5.2.2	Annunciator and Audible Alarm System	3-53
3.10.5.2.3	Radwaste System Control Panels	3-53
3.10.5.2.4	Miscellaneous Local Control Panels	3-54
3.10.5.2.5	Design Features Important to the Defueled Condition	3-54
3.10.6	Lighting Systems	3-54
3.10.7	Communications System	3-54
3.11	ELECTRICAL SYSTEMS	3-55
3.11.1	Design Basis	3-55
3.11.2	System Description	3-55
3.11.2.1	Offsite Power System	3-55
3.11.2.2	Onsite Power System	3-55
3.11.2.2.1	AC Power Systems	3-55
3.11.2.2.1.1	4160-V System	3-55a
3.11.2.2.1.2	480-V System	3-56
3.11.2.2.1.3	120-Vac Instrument and Control Power System	3-56
3.11.2.2.1.4	Cable Derating	3-56
3.11.2.2.1.5	Cable Tray Loading	3-57
3.11.2.2.1.6	Reliability of Power Supplies	3-58
3.11.2.2.2	DC Power Systems	3-59
3.11.2.2.2.1	125-Vdc Power System	3-59
3.11.2.3	Design Features Important to the Defueled Condition	3-60
3.11.3	Fire Protection for Cable Systems	3-60
3.12	REFERENCES SECTION 3.0	3-61

TABLE OF CONTENTS

SECTION	TITLE	PAGE
6.	CONDUCT OF OPERATIONS	6-1
6.1	RESPONSIBILITY AND ORGANIZATION	6-1
6.1.1	On-Site Organization	6-1
6.1.1.1	Duties and Responsibilities of the Operating Staff Personnel	6-1
6.1.1.1.1	Decommissioning Operations Manager	6-1
6.1.1.1.2	Shift Supervisor, Decommissioning	6-2
6.1.1.2	Duties and Responsibilities of the Support Staff	6-2
6.1.1.2.1	RP/Chemistry Manager, Decommissioning	6-2
6.1.1.2.2	Maintenance Manager, Decommissioning	6-2
6.1.1.2.3	Regulatory Assurance Manager	6-2
6.1.1.2.4	Engineering Manager, Decommissioning	6-2
6.1.1.2.5	Services Manager, Decommissioning	6-2
6.2	TECHNICAL SPECIFICATIONS	6-2
6.3	TRAINING	6-3
6.4	PROCEDURES	6-3
6.5	PROGRAMS	6-3
6.5.1	Emergency Plan	6-3
6.5.2	Security Plan	6-4
6.5.3	Fire Protection Program	6-4
6.5.4	Fitness for Duty	6-4
6.5.5	Offsite Dose Calculation Manual	6-4
6.5.6	Process Control Program	6-5
6.5.7	Maintenance Rule Program	6-5
6.5.8	Quality Assurance Program	6-5
6.6	REVIEW AND INVESTIGATIVE FUNCTION	6-5

TABLE OF CONTENTS

SECTION	TITLE	PAGE

THIS PAGE INENTIONALLY LEFT BLANK

1.2.4 Fuel Handling System

The fuel handling equipment is designed to handle spent fuel under water from the time it leaves its fuel rack until it is placed in a cask for shipment from the site. Underwater transfer of spent fuel provides an optically transparent radiation shield, as well as a reliable source of coolant for removal of decay heat. This system also provides capability for receiving, handling and storage of new fuel. Both the new fuel storage facility and the spent fuel storage facility are shared by the two units.

1.2.5 Electrical System

The station auxiliary power system consists of auxiliary transformers, 4160-V and 480-V switchgear, 480-V motor control centers, 120-Vac instrument buses and 125-Vdc battery buses.

Figure 1-1 indicates the six 345-kV lines that service the 345-kV transmission terminal. The two Libertyville lines share a double circuit tower line and the two Wisconsin lines share a second double circuit tower line on a common right-of-way for 6.1 miles. The two Northbrook lines on a double circuit tower line approach the terminal from the south. This Northbrook right-of-way does not connect or intersect with the Libertyville or the Wisconsin right-of-way.

In addition, there are two independent 12-kV feeds from the commercial electrical distribution system. They supply two 12-kV to 480-V step down Spent Fuel Nuclear Island (SFNI) transformers. These transformers provide the normal power supplies to the spent fuel pool support systems. The switch gear buses are located in the fuel building.

1.2.6 Site and Environment

The characteristics of the site and its environs have been investigated to establish bases for determining criteria for storm, flood, and earthquake protection and to evaluate the validity of calculational techniques for the control of routine and accidental releases of radioactive liquids and gases to the environment. Field programs to investigate geology and seismology are completed. A Preoperational Meteorological Program to provide onsite observations of wind speed and direction was begun January 1970. A radiological study of the site environs was initiated March 1970 with the objective of establishing background radiation levels.

The site is in Northeast Illinois on the west shore of Lake Michigan about 40 miles north of Chicago, Illinois, and about 42 miles south of Milwaukee, Wisconsin, as shown in Figure 1-17.

The site is covered mainly by sandy soil with patches of peat and muck in the marshy western portions of the site. Test borings, to investigate subsurface conditions reveal that the site is blanketed by granular lake deposits underlain by glacial drift consisting of till, outwash and lake deposits. The site is well ventilated and not subject to severe persistent inversion. While tornadoes occur in the region, none have been reported to affect the lake shore site directly. High winds (on the order of 70-mph) can be expected once in 50 years from storms.

A horizontal ground acceleration, at the site, of 0.17 times gravity (0.17g) combined with a vertical acceleration of 0.11 times gravity (0.11g) has been used for the earthquake design criteria based on site investigations.

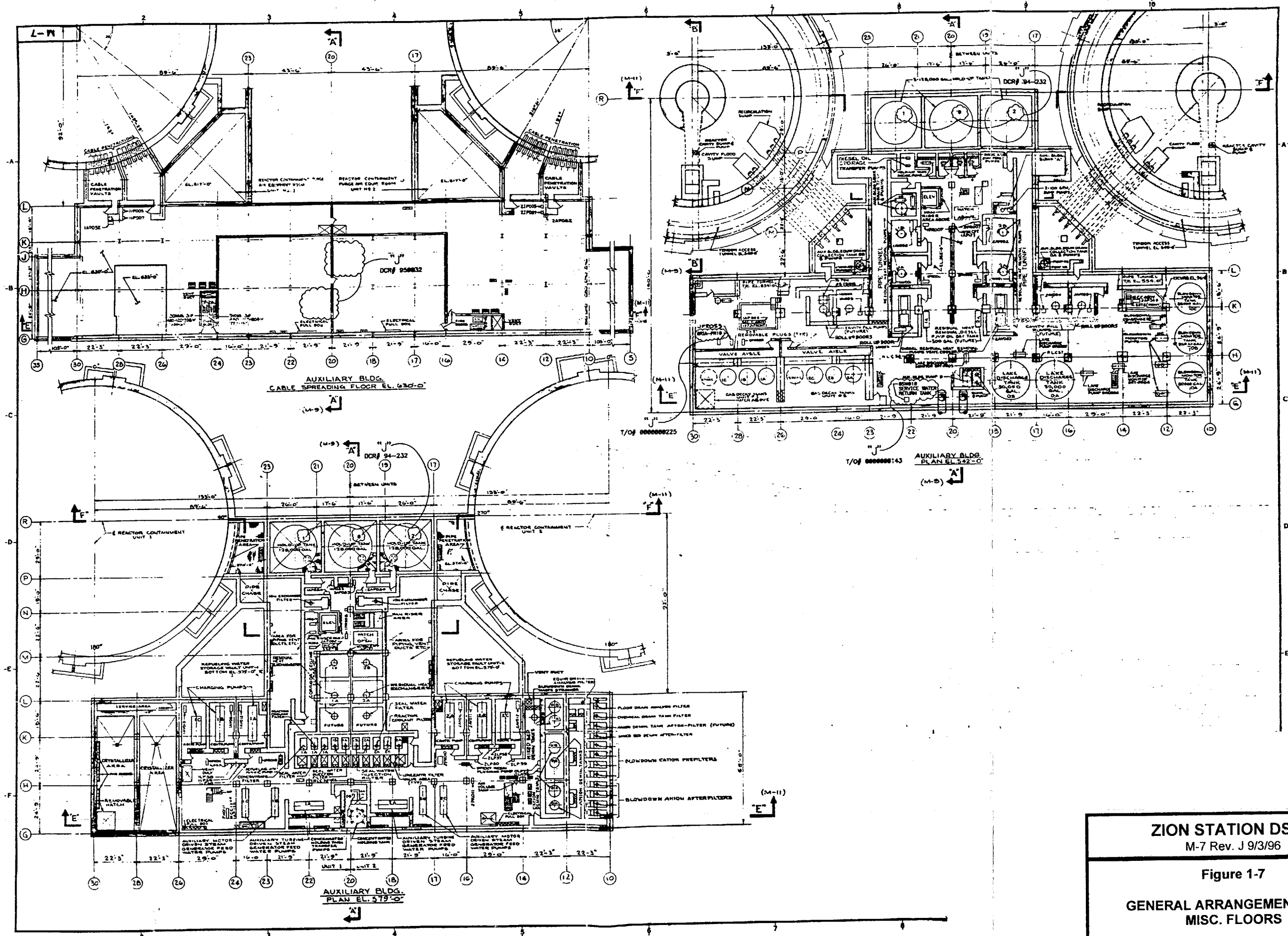

ZION STATION DSAR
M-7 Rev. J 9/3/96

Figure 1-7

GENERAL ARRANGEMENT PLAN MISC. FLOORS

October 2000

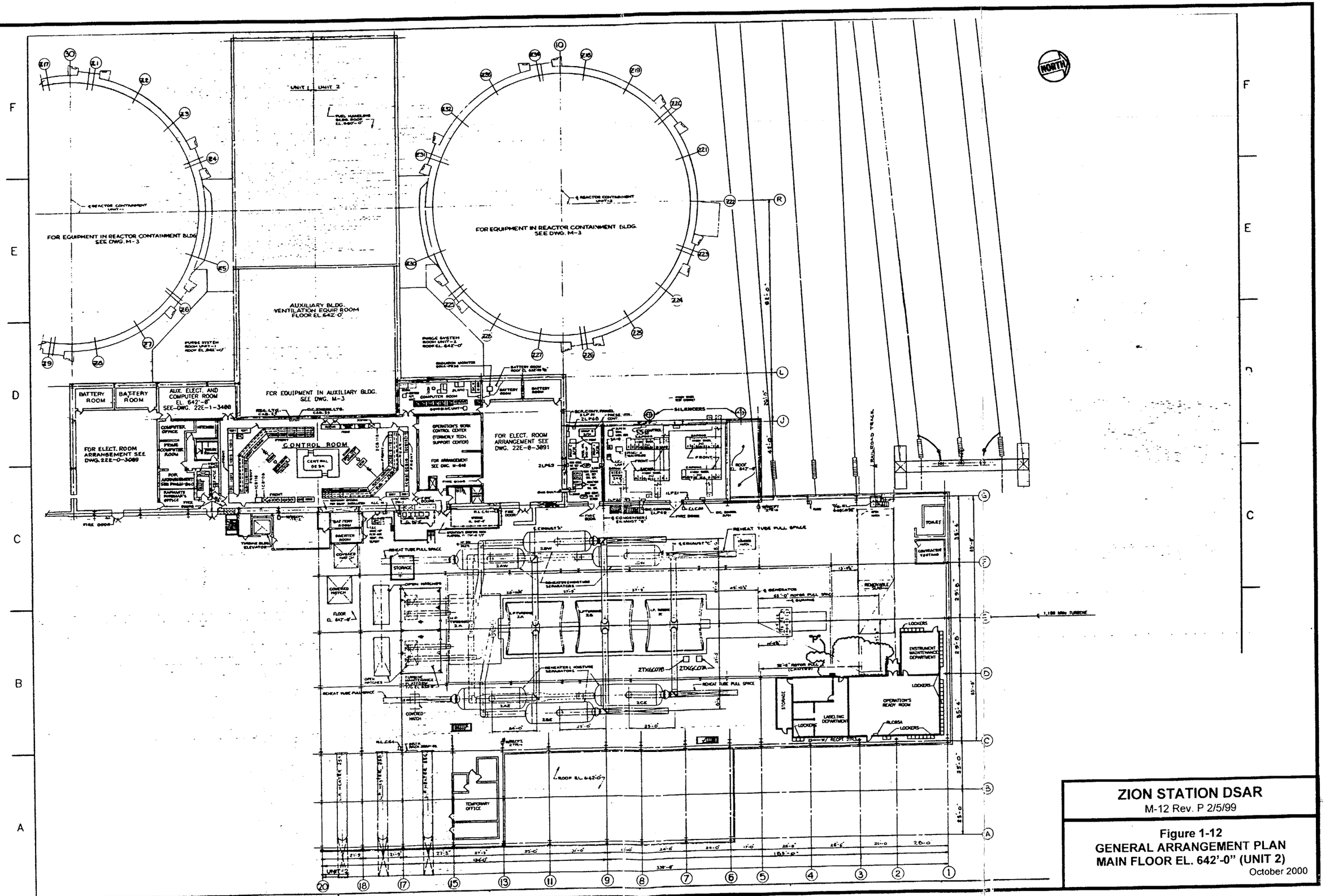

ZION STATION DSAR

M-12 Rev. P 2/5/99

Figure 1-12
GENERAL ARRANGEMENT PLAN
MAIN FLOOR EL. 642'-0" (UNIT 2)

October 2000

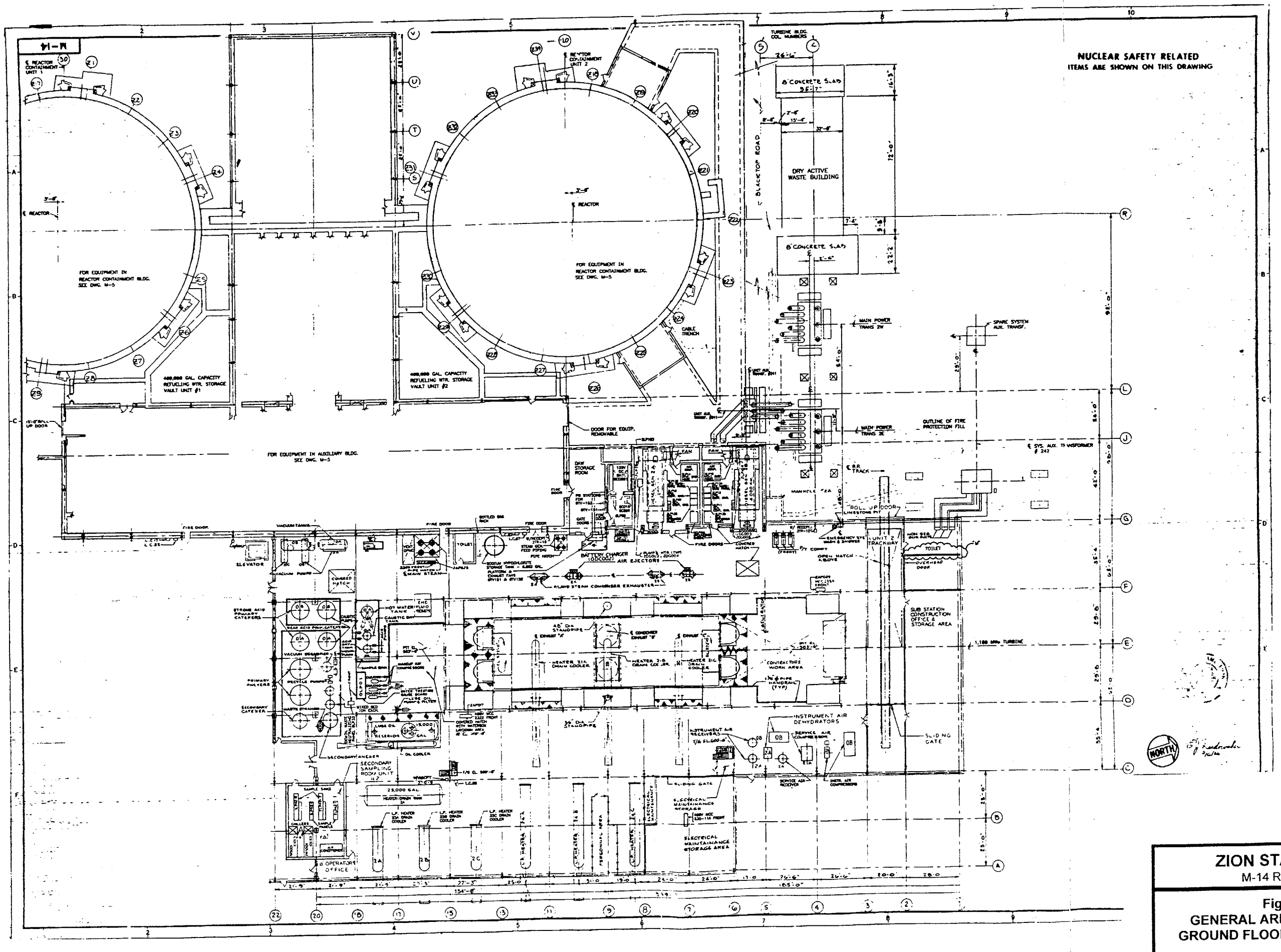

ZION STATION DSAR

M-14 Rev. M 10/7/97

Figure 1-14
GENERAL ARRANGEMENT PLAN
GROUND FLOOR EL. 592'-0" (UNIT 2)

October 2000

2.3.2.1.5 Severe Weather

Northern Illinois experiences about 36 thunderstorms per year, with the largest number occurring from May through August. Most of these thunderstorms are of light or moderate intensity; but occasionally, severe thunderstorms, accompanied by high winds, hail, and heavy rainfall, can cause extensive damage to crops.

Based on work by Thom (Reference 14), highest expected winds were determined for the Zion site and are listed in Table 2-10.

The value of the highest gust of wind with a mean recurrence interval of 100 years is approximately 104 miles per hour, and for a 50-year interval, approximately 91 mph. The above estimates of highest gusts are based on work performed by Huss (Reference 15).

Since 1871, only three tropical storms have moved far enough inland to have passed near the Zion site. The tropical storms, which passed within about fifty miles of the site, occurred on October 6, 1949; June 28, 1960; and June 26, 1968. All were in a state of well-advanced dissipation and did not cause any significant damage to northeastern Illinois.

In the period from 1959 to 1969, thirty-four tornadoes have been recorded in Weather Bureau records as having occurred inside a square 80 miles on a side with the Zion site in the center. These are listed in Table 2-11, with the occurrence recorded as to state, date, direction of movement, path length, and width. Most of the tornado activity in Illinois takes place in the southern half of the state, and relatively few cross the shoreline from land to water.

According to methods outlined in a paper by Thom, (Reference 16) estimates of the probability of tornado occurrence at a point within a one-degree square are possible. Using the median values of path width and length of Iowa tornado tracks, and the approximate area of the site, the probability of a tornado occurrence at the site has been calculated to be 1.29×10^{-4}. On the basis of the ten years of observations used in Thom's paper, the 95% confidence limits have been determined to be $\pm 4.07 \times 10^{-5}$ ($\pm 2.2\sigma$). A probability of 1.69×10^{-4} is thus determined at the 95% confidence level. This indicates a recurrence interval of approximately one tornado every 5900 years within the site boundaries.

An alternate method, using the value for a path area of 2.8209 square miles suggested by Thom, yields a probability of 9.0×10^{-4} for the 95% confidence limits. These result in a range of recurrence interval from 800 to 1600 years.

2.3.3 Onsite Meteorological Measurements Program

The meteorological measurements program at the Zion site consists of monitoring wind direction, wind speed, temperature, and precipitation. Two methods of determining atmospheric stability are used: delta T (vertical temperature difference) is the principal method; sigma theta (standard deviation of the horizontal WD) is available for use when delta T is not available. These data, referenced in ANSI/ANS 2.5 (1984), are used to determine the meteorological conditions prevailing at the plant site. Site specific information on instrumentation, calibration procedures, as well as the meteorological measurements program during a disaster can be found in the Defueled Station Emergency Plan (DSEP).

The meteorological tower is equipped with instrumentation that conforms with the system accuracy recommendations of Regulatory Guide 1.23 and ANSI/ANS 2.5 (1984). The equipment is placed on booms oriented into the generally prevailing wind at the site. Equipment signals are brought to an instrument shack with controlled environmental conditions. The shack at the base of the tower houses the recording equipment, signal conditioners, etc., used to process and retransmit the data to the end-point users.

Recorded meteorological data are used to generate wind roses and to provide estimates of airborne concentrations of gaseous effluents and projected offsite radiation dose. Instrument calibrations and data consistency evaluations are performed routinely to ensure maximum data integrity. Data recovery objective is to attain better than 90% from each measuring and recording system. Data storage and records retention are also maintained in compliance with ANSI/ANS 2.5 (1984).

2.3.4 Short-Term Diffusion Estimates

Short-term diffusion estimate data is contained in Appendix 2C.

2.3.5 Long-Term Diffusion Estimates

Long-term diffusion estimate data is contained in Appendix 2C.

2.4 HYDROLOGIC ENGINEERING

2.4.1 Hydrologic Description

2.4.1.1 Site and Facilities

The plant's cooling water is drawn from Lake Michigan. All radioactive liquid waste generated at the plant is collected, treated, and either recycled or discharged. Those liquid wastes that are discharged are monitored to assure compliance with 10CFR20. Radioactivity levels will not exceed permissible concentrations at the cooling water outlet. The Lake County Public Water District operates a water intake about one mile north of the site and about 3,000 feet out in the Lake. This water intake is the closest source of potable water. Continuous release from the plant of cooling water will result in radionuclide concentrations below those permitted under 10CFR20.

Operation of the plant will not result in releases greater than 10CFR20 limits at the point of discharge and consequently normal operation should not result in significant radioactivity concentrations in drinking water. Interactions with contributions from other nuclear power stations are not considered significant since there are none located or currently announced within 66 miles of the Zion station.

TABLE 2-12

DELETED

TABLE 2-13

DELETED

TABLE OF CONTENTS

SECTION	TITLE	PAGE
3.9.4.4	Spent Fuel Pool Make-Up Capability	3-38
3.9.4.5	Design Features Important to the Defueled Condition	3-38
3.9.5	Spent Fuel Cask Drop Analysis	3-39
3.9.5.1	Objective of Analysis	3-39
3.9.5.2	Statement of Physical Problem	3-40
3.9.5.3	Calculational Methods and Other Assumptions	3-41
3.9.5.4	Results	3-42
3.10	PLANT SUPPORT SYSTEMS	3-43a
3.10.1	Spent Fuel Pool Secondary Loop Cooling System	3-43a
3.10.1.1	Design Basis	3-43a
3.10.1.2	System Description	3-43a
3.10.1.3	Components	3-43b
3.10.1.3.1	Cooling Tower	3-43b
3.10.1.3.2	Cooling Pumps	3-43b
3.10.1.4	Design Feature Important to the Defueled Condition	3-43b
3.10.2	Service Water System	3-46
3.10.2.1	Design Basis	3-46
3.10.2.2	System Description	3-47
3.10.2.3	Design Features Important to the Defueled Condition	3-48
3.10.3	Ventilation Systems	3-49
3.10.3.1	Control Room Heating, Ventilating, and Air Conditioning System	3-49
3.10.3.1.1	Design Basis	3-49
3.10.3.1.2	System Description	3-49
3.10.3.1.3	Normal Operation	3-49
3.10.3.1.4	Design Features Important to the Defueled Condition	3-50
3.10.3.2	Auxiliary Building Ventilation	3-50
3.10.3.2.1	Design Basis	3-50
3.10.3.2.2	Normal Operation	3-50
3.10.3.2.3	Design Features Important to the Defueled Condition	3-51
3.10.3.3	Containment Purge	3-51
3.10.3.3.1	Design Basis	3-51
3.10.3.3.2	Normal Operation	3-51

TABLE OF CONTENTS

SECTION	TITLE	PAGE
3.10.3.3.3	Design Features Important to the Defueled Condition	3-52
3.10.3.4	Auxiliary Ventilation Systems	3-52
3.10.3.5	Fuel Building Ventilation	3-52a
3.10.4	Fire Protection System	3-52
3.10.5	Operating Control Stations	3-53
3.10.5.1	General Layout	3-53
3.10.5.2	Design Basis	3-53
3.10.5.2.1	Control Room Design	3-53
3.10.5.2.2	Annunciator and Audible Alarm System	3-53
3.10.5.2.3	Radwaste System Control Panels	3-53
3.10.5.2.4	Miscellaneous Local Control Panels	3-54
3.10.5.2.5	Design Features Important to the Defueled Condition	3-54
3.10.6	Lighting Systems	3-54
3.10.7	Communications System	3-54
3.11	ELECTRICAL SYSTEMS	3-55
3.11.1	Design Basis	3-55
3.11.2	System Description	3-55
3.11.2.1	Offsite Power System	3-55
3.11.2.2	Onsite Power System	3-55
3.11.2.2.1	AC Power Systems	3-55
3.11.2.2.1.1	4160-V System	3-55a
3.11.2.2.1.2	480-V System	3-56
3.11.2.2.1.3	120-Vac Instrument and Control Power System	3-56
3.11.2.2.1.4	Cable Derating	3-56
3.11.2.2.1.5	Cable Tray Loading	3-57
3.11.2.2.1.6	Reliability of Power Supplies	3-58
3.11.2.2.2	DC Power Systems	3-59
3.11.2.2.2.1	125-Vdc Power System	3-59
3.11.2.3	Design Features Important to the Defueled Condition	3-60
3.11.3	Fire Protection for Cable Systems	3-60
3.12	REFERENCES SECTION 3.0	3-61

LIST OF TABLES

TABLE	TITLE
3-1	List of Missiles for Which Seismic Class I Structures Have Been Designed
3-2	Zion Auxiliary-Turbine Bldg, Time-History vs Response Spectrum Analysis, Comparison of Accelerations at Various Elevations
3-3	Seismic Class I Systems and Components
3-4	Summary of Concrete and Reinforcing Steel Stresses
3-5	Seismic Class I Load Combinations for the Fuel Handling and Auxiliary Buildings, the Crib House, and Reactor Building Internal Structures
3-6	Maximum Soil Pressures and Actual Factors of Safety
3-7	Quality Assurance Records to be Maintained for Containment Vessel
3-8	Spent Fuel Pool Cooling System Code Requirements
3-9	Spent Fuel Pool Cooling System Component Design Data
3-10	(Deleted)
3-11	(Deleted)
3-12	(Deleted)
3-13	(Deleted)
3-14	Service Water System Flow Requirements
3-15	AC and DC Power Data

LIST OF FIGURES

FIGURE	TITLE
3-1	Removable Slab – Tie Down Details
3-2	Removable Slab – Tie Down Details
3-3	Design Basis Earthquake (DBE) Response Spectra
3-4	Response Spectra – DBE Elevation 642' Auxiliary-Turbine-Diesel Generator Building
3-5	Response Spectra – DBE Elevation 630' Auxiliary-Turbine-Diesel Generator Building
3-6	Response Spectra – DBE Elevation 617' Auxiliary-Turbine-Diesel Generator Building
3-7	Response Spectra – DBE Elevation 592' Auxiliary-Turbine-Diesel Generator Building
3-8	Response Spectra – DBE Elevation 580' Auxiliary Building
3-9	Response Spectra – DBE Elevation 560' Auxiliary-Turbine Building
3-10	Response Spectra – DBE Elevation 542' Auxiliary Building
3-11	Response Spectra – DBE Elevation 617' Fuel Handling Building
3-12	Response Spectra – DBE Elevation 602' Fuel Handling Building
3-13	Response Spectra – DBE Elevation 592' Fuel Handling Building
3-14	Response Spectra – DBE Elevation 617' Reactor Building
3-15	Response Spectra – DBE Elevation 590' Reactor Building
3-16	Response Spectra – DBE Elevation 581'-10" Reactor Biological Shield
3-17	Response Spectra – DBE Elevation 568' Reactor Building
3-18	Response Spectra – DBE Containment Vessel Elevation 626'-3"
3-19	Response Spectra – DBE Crib House Elevation 594' Operating Floor Slab
3-20	Response Spectra – DBE Crib House Elevation 552' Pump Room Floor
3-21	Response Spectra – DBE Outdoor Equipment
3-22	Comparison - Actual Spectrum and Site Spectrum (DBE)
3-23	Reactor Building Framing Section B-B
3-24	Crib House Section A-A West Area
3-25	Fuel Handling Building Roof Framing Plan West Area
3-26	Fuel Handling Building Wall Plan El. 617'-0" East Area
3-27	Auxiliary Building Sections & Details Sheet 16
3-28	Auxiliary Building Concrete Beam Schedule
3-29	Concrete Block Shield Wall–Tie Down Details
3-30	Combined Interaction Model for Reactor and Auxiliary Buildings
3-31	Spent Fuel Storage Pool
3-32	Spent Fuel Pool Cooling and Cleanup System
3-33	Spent Fuel Cask Movement Path in Fuel Handling Building
3-34	Elevation of Fuel Handling Building
3-35	Cask Over Storage Area – Looking South
3-36	Elevation of Fuel Handling Building – Looking South
3-37	Yield Line Pattern for Flexural Failure in Guard Wall
3-38	Load vs. Deflection Curve for Guard Wall (for most critical position)
3-39	Deleted
3-39a	Spent Fuel Pool Secondary Loop Cooling System
3-40	Service Water System

LIST OF FIGURES

FIGURE	TITLE
3-41	Auxiliary Building Ventilation Supply System
3-42	Auxiliary Building Ventilation Exhaust System
3-42a	Fuel Building Ventilation System
3-43	Containment Purge Supply System
3-44	Containment Purge Exhaust System
3-45	345-kV Interconnection With Transmission System
3-45a	Spent Fuel Pool Nuclear Island Offsite Power Supply
3-46	Zion Station Single Line Diagram – Unit 1
3-47	Zion Station Single Line Diagram – Unit 2
3-48	125 V DC Distribution System

For Seismic Class I equipment, dynamic analyses, static analyses, or tests were used to determine that components and structures will operate or maintain their integrity, as required. For Seismic Class II equipment, static analysis methods were used. Seismic Class III equipment meets applicable codes.

Seismic design is discussed in Section 3.7.

3.2.2 Seismic Class I Structures

The Containment Building, Fuel Handling Building, and the Auxiliary Building are Seismic Class I structures. The spent fuel pool, in the Fuel Handling Building, and the Control Room, in the Auxiliary Building, are therefore Seismic Class I. As for the intake structure, that portion of the Crib House enclosing the service water pumps and the related essential piping, are all Seismic Class I.

In the permanently defueled condition, the Containment Building, Auxiliary Building, and Crib House are not vital to the safe shutdown and isolation of the plant since both reactors have been permanently defueled. Although the potential for a LOCA no longer exists, the seismic qualification of these structures continues to ensure that a structural failure will not result in an increase in the severity of any accident postulated to occur in the defueled condition. In addition, the Containment Buildings, Fuel Handling Building, and Auxiliary Building also function to contain radioactive materials and therefore are regarded as Important to the Defueled Condition (ITDC – see 3.2.4).

3.2.3 Seismic Class I Systems and Components

Following the cessation of reactor operations at Zion Station, various systems and components were assessed to determine their relative importance in the permanently defueled condition. This section of the DSAR has been modified to only address those systems and components originally designed as Seismic Class I and determined to be important to the defueled condition of the plant. Systems and components formerly classified as Seismic Class I and not included in the DSAR will not be used to support the storage, cooling, or integrity of spent fuel, and are not associated with the handling of radioactive materials or involved with radiological safety. As such, these systems and components have no safety significance.

Table 3-3 lists the Seismic Class I systems and components applicable in the defueled condition.

3.9 FUEL STORAGE AND HANDLING

3.9.1 New Fuel Storage

3.9.1.1 Design Bases

The design basis for the new fuel storage rack is discussed in Section 3.9.2

3.9.1.2 New Fuel Storage Description

The new fuel storage facility consists of a new fuel storage rack that is in a separate area designed to hold 132 new fuel assemblies. The new fuel assemblies are stored in the new fuel storage rack in parallel rows having a center-to-center distance of 21 inches. The new fuel racks are provided with locking devices which preclude any transfer of new fuel assemblies without proper authorization.

New (unirradiated) fuel may also be stored in NRC approved shipping containers designed and licensed for transportation of new fuel. Fuel stored in such containers may be staged in various approved locations within the protected area in order to facilitate shipment of the fuel.

3.9.1.3 Design Features Important to the Defueled Condition

The new fuel storage facility is considered ITDC while it is used to ensure the safe storage of the remaining unirradiated fuel assemblies. After all of the unirradiated fuel assemblies have been removed, the new fuel storage facility will no longer be considered ITDC.

3.9.2 Spent Fuel Storage

3.9.2.1 Design Bases

3.9.2.1.1 Prevention of Fuel Storage Criticality

Criterion: Criticality in the new and spent fuel storage pits shall be prevented by physical systems or processes. Such means as geometrically safe configurations shall be emphasized over procedural controls.

The new fuel storage rack accommodates two-thirds of a core (132 fuel assemblies). There are three sections of racks with each section made up of two rows. The two parallel rows in each section have a nominal center-to-center spacing of 21 inches and each section is separated by a distance of 44 inches to assure that $k_{eff} < 0.95$, even if water filled the new fuel storage vault, provided that the stored fuel has a maximum of 57.4 grams U-235 per axial centimeter of fuel assembly length. The new fuel storage vault is protected from flooding by its free flood drain.

The spent fuel storage pool is designed for 3012 assemblies, plus the required spent fuel shipping cask area. Borated water is used to fill the spent fuel storage pool. The fuel is stored in a vertical array with sufficient center-to-center distance between assemblies to assure k_{eff} <0.95, even if unborated water is used to fill the pool, provided that the fuel has a maximum loading of 57.4 grams U-235 per axial centimeter of fuel assembly length.

Detailed instructions are available for use by refueling personnel. In addition to the instructions, safety limits, conditions, and the design of the fuel handling equipment incorporating built-in interlocks and safety features provide assurance that no incidents occur during the fuel handling operations that result in a hazard to public health and safety.

Zion Station complies with the criticality accident requirements of 10 CFR 50.68 (rather than those of 10 CFR 70.24) in that:

Procedures ensure that subcritical conditions are maintained during fuel assembly handling and storage in accordance with 10 CFR 50.68(b)(1).

The design of the new and spent fuel storage facilities meets the k-effective requirements specified in 10 CFR 50.68(b)(2) through (4).

Procedures ensure that the quantity of non-fuel SNM stored on site is less than that required for a critical mass in accordance with 10 CFR 50.68(b)(5).

Fuel building area radiation monitors are provided in accordance with 10 CFR 50.68(b)(6).

The enrichment of fresh fuel is limited by Technical Specifications to be in accordance with 10 CFR 50.68(b)(7).

This section of the DSAR documents the station commitment in accordance with 10 CFR 50.68(b)(8).

3.9.2.1.2 Fuel Storage Decay Heat

Criterion: Reliable decay heat removal systems shall be designed to prevent damage to the fuel in storage facilities that could result in radioactivity release which results in undue risk to the health and safety of the public.

The spent fuel pool water provides reliable and adequate cooling medium for spent fuel transfer. The spent fuel storage pool is provided with a Spent Fuel Pool Cooling System which is discussed in detail in Section 3.9.4.

3.9.2.1.3 Spent Fuel Storage Radiation Shielding

Criterion: Adequate shielding for radiation protection shall be provided in the design of spent fuel storage facilities.

Adequate shielding for radiation is provided during spent fuel handling and storage operations under water. This permits visual control of the operation at all times while maintaining low radiation levels. Pool water level is indicated. Water removed from the pool must be pumped out since there are no gravity drains.

Gamma radiation in the Fuel Handling Building is monitored. A high level signal is alarmed locally and is annunciated in the Control Room.

3.9.2.1.4 Protection Against Radioactivity Release From Spent Fuel Storage

Criterion: Provisions shall be made in the design of fuel storage facilities such that no undue risk to the health and safety of the public could result from an accidental release of radioactivity.

All fuel storage facilities are contained and equipment designed so that accidental releases of radioactivity directly to the atmosphere are monitored and will not exceed the guidelines of 10CFR100.

3.9.2.1.5 Monitoring Fuel Storage

Criterion: Monitoring and alarm instrumentation shall be provided for fuel storage and associated handling areas for conditions that might result in loss of capability to remove decay heat and to detect excessive radiation levels.

An area radiation monitor of the gamma scintillation type is provided to monitor the spent fuel pool area. This is more fully described in Chapter 4. Temperature and level instruments are provided to guard against the loss of cooling capability. Spent Fuel Pool level is also checked once per day by operations personnel.

3.9.2.2 Spent Fuel Storage Facility Description

The spent fuel storage pool is a reinforced concrete structure with seam-welded stainless steel plate liners. This Class I structure is designed to withstand the anticipated earthquake loadings and to prevent liner leakage even in the event the reinforced concrete develops cracks.

The spent fuel storage pool is designed for the underwater storage of spent fuel assemblies and control rods after their removal from the reactor. The pool depth is such that the surface dose level will not be increased by more than approximately 2.5 mR when moving a fuel assembly over storage racks. It is designed to accommodate 3012 fuel assemblies. The spent fuel pool is constructed of reinforced concrete. The entire interior basin face and transfer canal are lined with stainless steel.

Spent fuel assemblies are handled by the spent fuel handling tool (a long handled tool) suspended from an overhead monorail electric hoist and manipulated by an operator standing on a movable bridge over the pool. Controls have been established such that no loads heavier than the weight of a single spent fuel assembly plus the tool for moving that assembly shall be carried over fuel stored in the spent fuel pool. In addition, the spent fuel handling tool, the burnable poison tool, the rod cluster control changing fixture and the thimble plug shall not be carried at heights greater than two feet over fuel stored in the spent fuel pool.

Storage racks are provided to hold spent fuel assemblies. Fuel assemblies are placed in vertical cells and contiguously grouped in parallel rows. The spent fuel storage racks are Seismic Class I equipment and will remain functional during and after a DBE. They are not anchored to the Spent Fuel Pool floor or walls, or structurally interconnected. Each rack module is provided with leveling pads which support the rack. The fuel rack structure is a folded metal plate assembly welded to a baseplate and supported on four legs. Center to center spacing of region 1 cells is 10.78" in the East-West direction and 10.54" in the North-South direction. Region 2 storage cells have a 9.144" center to center spacing in both directions. Additionally, the storage racks contain an amount of Boral which is a neutron absorber. This assures the necessary spacing between assemblies to prevent criticality, even if the pool was inadvertently filled with unborated water. Regions 1 and 2 of the spent fuel storage pool are shown in Figure 3-31. Control rod clusters are stored in the fuel assemblies. Fuel assemblies stored in the spent fuel pool must have no more than 57.4 grams U-235 per axial centimeter of fuel assembly length. Most abnormal storage conditions will not result in an increase in k_{eff}. However, it is possible to postulate events, such as the inadvertent misloading of a fuel assembly with a burn-up and enrichment combination outside of the acceptable area or dropping an assembly between the pool wall and the fuel racks, which could lead to an increase in reactivity. However, credit can be taken for the presence of approximately 500 ppm of boron in the pool water as is required when fuel is being moved in the Spent Fuel Pool by the plant Technical Specifications. The reduction in k_{eff} caused by the boron more than offsets the reactivity addition caused by these postulated events. A minimum boron concentration of 160 ppm is adequate to assure that the limiting k_{eff} of 0.95 is not exceeded.

The fuel assemblies are a canless type, with the basic assembly consisting of a rod cluster control guide thimble mechanically attached to grids and a top and bottom nozzle. Fuel rods are supported at several points along their length by spring-clip grids. There are four types of fuel assemblies that were used by Zion: Low Parasitic (LOPAR), Optimized Fuel Assemblies (OFA), VANTAGE 5, and VANTAGE 5 with Intermediate Flow Mixer (IFM) designs. The lengths of the assemblies are as follows: LOPAR length is 159.710", OFA length is 159.765", VANTAGE 5 and VANTAGE 5 IFM length is 159.975". The maximum height of a fuel assembly stored in the spent fuel pool, based on the spent fuel rack design, is at the 589' 11.725" elevation. The fuel rods are cold worked, partially annealed Zircaloy tubes containing slightly enriched uranium pellets. Rod cluster control assemblies (RCCAs), secondary sources, thimble plugs, and burnable absorber rods, if required, were inserted into the guide thimbles of the fuel assemblies. The absorber sections of the control rods were fabricated of a silver-indium-cadmium alloy sealed in stainless steel tubes. The material in the discrete burnable absorber rods is in the form of an aluminum oxide-boron carbide annulus sealed in Zircaloy called a Wet Annular Burnable Absorber (WABA). As of August 12, 1998, there are 2226 spent fuel assemblies stored in the spent fuel pool.

A new fuel elevator is located in the pool that was used to transfer new fuel assemblies into the pool for subsequent handling with the spent fuel pool handling crane. The elevator is equipped with alarms to inform the operator of any malfunction of the elevator during movement of new fuel. To prevent the inadvertent lifting of irradiated fuel, the new fuel elevator is key interlocked to prohibit raising when the elevator is loaded with greater than 1400 lbs. Raising of the elevator when loaded with a fuel element activates an audible alarm.

3.9.2.3 Design Features Important to the Defueled Condition

The spent fuel pool (including liner), fuel storage racks, fuel assemblies (including cladding) and transfer canal are necessary for the safe storage of nuclear fuel. Thus, these SSCs are considered to be ITDC. Several consideration and analyses determine the safety of the spent fuel pool in the original design for Zion Station. These include:

Thermal Analysis,
Radiological Analysis,
Fuel Assembly Structural and Material Consideration,
Fuel Pool Structural and Material Considerations, and
Criticality Analysis.

Reference 1 provides a more detailed assessment of the design features of the spent fuel racks.

The passive design features of the spent fuel pool minimizes the potential for significant losses of pool water and thereby assures that the fuel is safely stored and the public and plant workers are adequately protected. In the permanently defueled condition, potential events which could result in a significant loss of water from the spent fuel pool are discussed in Chapter 5.0. One of these events is a loss of spent fuel cooling. This event assumes a loss of pool inventory as a result of boiloff of the water volume. An evaluation has been performed to assess the effects of a thermal increase on the spent fuel pool structure (Reference 2). The results of this evaluation concluded that for dead load, live load, and a water temperature of 212 degrees F, that the stresses associated with the spent fuel pool are within allowable limits and that an increase in the bulk water temperature to 212 degrees F has no adverse consequences to the pool structure.

3.9.3 Fuel Handling Systems

3.9.3.1 Design Basis

The Fuel Handling System provides a safe, effective means of transporting and handling fuel. The system is designed to minimize the possibility of mishandling or of misoperations that could cause fuel damage and potential fission product release.

The adjustable geared limit switch opens the HOIST circuit when the bottom block reaches the preset upper limit and opens the LOWER circuit when the bottom block reaches a preset lower limit. The limit switch is driven by the hoist drum and is actuated after a predetermined number of drum revolutions.

Both the HOIST and LOWER circuits are connected through sets of normally closed contacts in the limit switch. Both the upper and lower limits of bottom block travel are preset at the factory.

3.9.3.3 Design Features Important to the Defueled Condition

The Fuel Handling System, as described in section 3.9.3, is considered ITDC since it is associated with the safe storage and handling of nuclear fuel.

3.9.4 Spent Fuel Pool Cooling and Cleanup System

3.9.4.1 Design Basis

The Spent Fuel Pool Cooling System is designed to remove heat from the spent fuel pool generated by the stored spent fuel elements. The system serves the spent fuel pool, which is shared between the two units.

System piping is arranged so that failure of any pipeline does not drain the spent fuel pool below the top of the stored fuel elements (Reference 3).

3.9.4.1.1 Fuel and Waste Storage Decay Heat

Criterion: Reliable decay heat removal systems shall be designed to prevent damage to the fuel in storage facilities, and to waste storage tanks that could result in radioactivity release, which results in undue risk to the health and safety of the public.

The Spent Fuel Pool Cooling System has two cooling trains. Either of these trains is capable of handling the heat load residing in the spent fuel pool. During normal conditions, the pump and spent fuel pool heat exchanger handle the decay heat load and maintain the temperature between 40°F and 120°F, with one train operating.

3.9.4.1.2 Codes and Classifications

All piping and components of the system are designed to the applicable codes and standards listed in Table 3-8.

3.9.4.2 System Description

Each of the two cooling loops in the Spent Fuel Pool Cooling System (see Figure 3-32) consists of a pump, heat exchanger, filter, demineralizer, piping and associated valves and instrumentation. Each pump draws water from the pool, circulates it through the heat exchanger, and returns it to the pool. Secondary Loop cooling water cools the heat exchanger. The availability of two full cooling trains allows prolonged outages of any active or passive component in the system, the only possible consequence being an increase in water temperature.

Whenever a leaking fuel assembly exists in the spent fuel storage pool, a small quantity of fission products may enter the spent fuel cooling water. Purification loops are provided for removing these fission products and other contaminants from the water. The clarity and purity of the spent fuel pool water is maintained by passing pool water through a filter and demineralizer. Skimmers are provided to prevent dust and debris from accumulating on the surface of the water. The water chemistry of the spent fuel pool is controlled via Chemistry Department procedures.

The Spent Fuel Pool is separated from the fuel transfer canal by a common wall. Access to the transfer canal from the Spent Fuel Pool is provided by a removable weir gate, the bottom of which is approximately 2'-4" above the top of the stored fuel. An inflatable seal is incorporated into the design of the weir gate to prevent leakage from the Spent Fuel Pool into the transfer canal when the transfer canal is empty. Pressurization of the weir gate inflatable seal is accomplished by instrument air or via dedicated nitrogen bottles.

The most serious failure of this system would be complete loss of water in the spent fuel storage pool. To protect against this possibility, the spent fuel storage pool cooling connections enter near the water surface level so that the pool cannot be gravity drained.

The active components of the system are in continuous use and no additional periodic tests are specified. Periodic visual inspections and preventive maintenance are conducted following normal industrial practice.

3.9.4.3 Components

Spent Fuel Pool Cooling System component design data are listed in Table 3-9.

3.9.4.3.1 Spent Fuel Pool Heat Exchangers

The spent fuel pool heat exchangers are of the shell and U-tube type with the tubes welded to the tube sheet. Secondary Loop cooling water circulates through the shell, and spent fuel pool water circulates through the tubes. The tubes are austenitic stainless steel and the shell is carbon steel.

3.9.4.3.2 Spent Fuel Pool Pumps

The two spent fuel pool pumps circulate water in the spent fuel pool cooling loops. All wetted surfaces of the pump are austenitic stainless steel or equivalent corrosion resistant material. The pumps are operated manually from a local station.

3.9.4.3.3 Spent Fuel Pool Filters

The spent fuel pool filters remove particulate matter from the spent fuel pool water. The filter cartridge is of synthetic fiber, and the vessel shell is austenitic stainless steel. Different filter cartridges can be installed, if needed, to improve water clarity.

3.9.4.3.4 Spent Fuel Pool Strainers

A stainless steel strainer is located at the inlet of each spent fuel pool cooling suction line for removal of relatively large particles which might otherwise clog the spent fuel pool demineralizer.

3.9.4.3.5 Spent Fuel Pool Demineralizers

Each of the inline demineralizers are sized to pass about 100 gpm of the loop circulation flow to provide adequate purification of the spent fuel pool water for unrestricted access to the working area and to maintain water clarity. Additionally, an underwater, inpool demineralizer is available. It is sized to pass about 75 gpm of the pool volume to provide adequate purification of the spent fuel pool water for unrestricted access to the working area and maintain water clarity.

3.9.4.3.6 Spent Fuel Pool Skimmer

A spent fuel pool skimmer pump, strainer, and filter are provided for surface skimming of the spent fuel pool water. This subsystem maintains the needed clarity for visual observations of the spent fuel pool water.

3.9.4.3.7 Spent Fuel Pool Cooling System Valves

Manual stop valves are used to isolate equipment, and manual throttle valves provide flow control. Valves in contact with spent fuel pool water are austenitic stainless steel or equivalent corrosion-resistant material.

3.9.4.3.8 Spent Fuel Pool Cooling System Piping

All piping in contact with spent fuel pool water is austenitic stainless steel. The piping is welded except where flanged connections are used at the pump, heat exchanger, and filter to facilitate maintenance.

3.9.4.3.9 Spent Fuel Pool Sump Recessed Area

A sump recessed area in the spent fuel pool allows for complete draining of the sump with a submersible pump for cleaning, inspection, and maintenance of the spent fuel pool.

3.9.4.4 Spent Fuel Pool Make-up Capability

Various equipment and components are available to provide make-up water to the spent fuel pool. Make-up to the spent fuel pool would normally be required to account for natural evaporation. A quantity of borated water is maintained in a Refueling Water Storage Tank located in the Auxiliary Building. This tank can hold a sufficient amount of water to supply make-up to the spent fuel pool for several hours to account for routine or non-routine boil-off. A 100 gpm Refueling Water Purification pump, operated manually from a local station, is available to transfer water from a Refueling Water Storage Tank to the spent fuel pool. Other make-up sources include water from a Condensate Storage Tank via a Demineralized Water Flushing pump and the Fire Protection header via hoses.

An additional source of water that is lost from the pool through normal evaporation is an off-site water supply that is passed through a water purification unit prior to discharge into the pool.

The spent fuel pool has been analyzed for loss of cooling (see Chapter 5). Sufficient time exists from the time cooling is lost and boiling occurs that compensatory measures can be taken, including supplying make-up water, to prevent fuel damage and off-site releases that exceed USEPA Protective Action Guidelines or 10CFR100 limits.

3.9.4.5 Design Features Important to the Defueled Condition

This system is associated with the storage of nuclear fuel and helps ensure adequate decay heat removal (cooling function) while maintaining exposures to plant personnel ALARA (cleanup function). Those portions of the Spent Fuel Cooling and Cleanup System which provide cooling and cleanup capability to the spent fuel pool are considered ITDC. These are as follows:

- Spent fuel pool pumps (as required)
- Spent Fuel Pool heat exchangers (as required)
- Spent Fuel Pool demineralizers (as required)
- Associated piping, valves, filters, skimmers, and strainers
- Spent Fuel Pool weir gate, including seal and nitrogen pressurization bottles if transfer canal is drained and weir gate is installed (this is being listed here rather than in section 3.9.2 since its failure, which is discussed in chapter 5, could lead to a loss of Spent Fuel Pool cooling).
- Municipal water supply makeup to the SFP
- RWST and refueling water purification pump for SFP borated water makeup.

PAGE INTENTIONALLY LEFT BLANK

3.10 PLANT SUPPORT SYSTEMS

3.10.1 Spent Fuel Pool Secondary Loop Cooling System

3.10.1.1 Design Bases

The Spent Fuel Pool Secondary Loop Cooling System is shown in Figure 3-39A.

The Spent Fuel Pool Secondary Loop Cooling System is designed to remove heat from the spent fuel heat exchangers. Cooling water flows through these heat exchangers, picks up heat from them, which in turn is transferred to the atmosphere. This heat transfer is normally performed through the use of fan assisted air to water cooling towers located outside the fuel building. The normal operating pressure of the secondary loop cooling is greater than that of the primary spent fuel cooling loop, minimizing the potential for radioactive water to leak into the secondary loop.

3.10.1.2 System Description

The Spent Fuel Pool Secondary Loop Cooling System consists of two redundant cooling loops, each of which are capable of providing sufficient heat removal for the Spent Fuel Pool. Each loop consists of a cooling tower, centrifugal pump and associated piping and valves. Flow is pumped from the cooling tower collection reservoir to the Spent Fuel Pool Heat Exchanger shell. Heat is transferred to the secondary loop from the Spent Fuel Pool water that flows through the tube side of the heat exchanger. The secondary loop cooling water then flows to the cooling tower where it discharges the heat and collects in the cooling tower collection reservoir. Cooling tower fans provide the air flow to remove the heat from the secondary loop via forced air convective heat transfer. A bypass design feature has been installed that allows the cooling towers to be bypassed and thermally protected when their heat removal function is not needed.

Makeup water to the cooling tower collection reservoirs is normally provided from the Zion municipal water system. Level in the collection reservoirs is maintained via level float valves located at the cooling towers. The collection reservoir has a high level drain which routes overfill water to the waste water treatment facility.

A portion of the secondary cooling loop flow is continuously routed through a water purification system to maintain water quality. As the system monitors the water quality it will blow down a portion of the secondary loop cooling water to the waste water treatment facility to maintain the required quality. Process radiation monitoring of the SFPSLC blowdown is satisfied by the fire sump discharge radiation monitor. Water quality parameters controlled by the purification system are pH, hardness, alkalinity, and chlorides.

The cooling tower collection reservoirs contain immersable electric heaters designed to prevent freezing of the cooling tower reservoir during cold weather months. The heaters are thermostatically controlled and are provided with a low reservoir water level cutoff.

The operation of the system is monitored with the following instrumentation:

1. Cooling tower reservoir low level alarm
2. Secondary cooling loop pump trip alarm
3. Spent fuel heat exchanger shell side outlet remote temperature indication
4. Secondary cooling loop local pressure indication
5. Secondary cooling loop local flow indication
6. Secondary cooling loop low flow pump trip interlock

3.10.1.3 Components

3.10.1.3.1 Cooling Tower

Two cooling towers each rated for a nominal cooling flow capacity of 1500 gpm. These cooling towers are located outside of the north wall of the fuel building.

3.10.1.3.2 Cooling Pumps

Two secondary cooling loop horizontally mounted centrifugal pumps located within the fuel building. Each pump is rated at a nominal flow capacity of 1500 gpm.

3.10.1.4 Design Features Important to the Defueled Condition

The Spent Fuel Pool Secondary Loop Cooling System is associated with the maintenance of stored nuclear fuel in a safe condition. As such, this system is considered ITDC. The requirements of the Secondary Loop Cooling System in the permanently defueled condition can be met by any combination of the equipment listed below as necessary to ensure adequate heat removal from the spent fuel pool heat exchangers.

- Secondary Cooling Loop Pumps
- Cooling Towers
- Associated piping and valves necessary to supply adequate cooling water to the Spent Fuel Heat exchangers
- Municipal water supply makeup to the cooling towers

PAGE INTENTIONALLY LEFT BLANK

PAGE INTENTIONALLY LEFT BLANK

•

3.10.2 Service Water System

3.10.2.1 Design Basis

The Service Water System supplies the equipment cooling water for the plant with the exception of the Fuel Building. The arrangement of the equipment and the flow path of the water is shown on Figure 3-40. Six pumps feed a common discharge header.

3.10.2.2 System Description

The six service water pumps are rated at 22,000 gpm at 210 feet TDH. The pumps are located in the Crib House and take their suction from the Crib House forebay which receives water from the lake through three, 13-foot steel intake lines. Two of the intake lines have 24-foot diameter bell-shaped inlets and are covered by a flat protective canopy. The third intake line receives water through an annular structure with 55 openings separated by as much as 96 feet. During the spring, summer, and fall months, a fishnet barrier is installed around the perimeter of the intake structure to meet the facilities' National Pollution Discharge Elimination System (NPDES) permit requirements and is removed in the winter months. It is extremely improbable that any single barge or ship on Lake Michigan could block all of the circulating water intake structure. Any two of the openings in the annular intake structure which supplies one 13-foot intake line, or a small fraction of one of the two 24-foot diameter bell-shaped inlets, each of which supply one 13-foot intake line, would be adequate to provide full service water flow for both Unit 1 and Unit 2. In the event that all three intake lines are blocked, water can be admitted to the forebay through one discharge line and its recirculation connection to the forebay.

The discharge of three service water pumps passes through two 40,000 gpm strainers with $^1/_8$-inch openings to a common header for all six pumps. The main supply headers connect to this common discharge header.

A sodium hypochlorite solution is injected into the Service Water System upsteam of the SW Strainers. This will control the Zebra Mussel population and biological activity in the SW System. A sodium bisulfite solution is injected into the Circulation Water (CW) discharge tunnels in order to neutralize the chlorinated water prior to re-entry into the lake.

The normal water supply to the Fire Protection System and the Screen Wash System is provided by the service water booster pumps. These pumps take suction from each of the main headers in the Crib House. The main headers pass under the Turbine Building after leaving the Crib House and enter the Auxiliary Building where the cooling water loops are supplied.

Pushbuttons are installed at the 4-kV buses 147, 148, 149, 247, 248 and 249 for local start of the service water pumps.

Isolation valves are provided in the loops and are provided in each of the feeds to individual coolers.

The system pressure is maintained at approximately 75 to 120 psig in the main supply header and a pump may be aligned to start when pressure drops in the main header.

The maximum service water flow required to meet the cooling needs in the permanently defueled condition is 3108 gpm (see Table 3-14). A single service water pump is capable of delivering at least 22,000 gpm. Therefore, one service water pump is capable of supplying sufficient cooling water. Miscellaneous non-essential loads may be present in addition to the essential loads identified.

Detection of leakage which might affect system operation is provided by means of installed pressure, temperature, and flow instrumentation and by level in the Auxiliary Building sumps. This instrumentation also aids in identifying flow restrictions.

The Auxiliary Building is provided with water detectors in collecting sumps which will alarm in the event of water accumulation from a piping or valve leak. The operator, upon receiving this alarm, goes to the area of the alarmed sump to determine the nature and location of the leakage and will operate the appropriate valves to isolate the affected area.

3.10.2.3 Design Features Important to the Defueled Condition

The Service Water System is not associated with the maintenance of stored nuclear fuel in a safe condition. As such, this system is not considered ITDC.

3.10.3.1.4 Design Features Important to the Defueled Condition

The Control Room Ventilation System was designed to handle a loss of coolant accident. Therefore, it is sufficiently designed to accommodate the significantly reduced source term in the permanently defueled condition. The consequences of the accidents in the defueled condition are significantly below the 10CFR100 guidelines. In addition, no credit for control room ventilation isolation is taken in the safety analysis since the dose consequences to control room inhabitants is significantly low without ventilation isolation. In the event of evacuation, cooling of the stored irradiated fuel in the spent fuel pool can be monitored locally.

The Control Room Ventilation System is not considered ITDC.

3.10.3.2 Auxiliary Building Ventilation

3.10.3.2.1 Design Bases

The Auxiliary Building Ventilation system is designed to maintain acceptable ambient air temperatures for equipment operation and personnel habitability, provides air flow in a cascading fashion from areas of lesser contamination potential to areas of greater contamination potential (for ALARA considerations), and provides a bulk exhaust flow for ease of effluent sampling.

3.10.3.2.2 Normal Operation

The Auxiliary Building Ventilation system supplies filtered, conditioned outside air to the various areas of the Auxiliary Building and exhausts filtered air back to the outside. The supply and exhaust air flows are balanced to maintain air flows in the Auxiliary Building in a cascading fashion from areas of lesser contamination potential to areas of greater contamination potential. The exhaust fans draw filtered air from the common exhaust plenum and discharge air to the Auxiliary Building vent stack past a radiation sampling monitor. The exhaust system can operate to maintain the required pressure gradients by vortex control dampers and the operation of one or more exhaust fans. Individual filter units treat the exhaust from miscellaneous areas of the Auxiliary Building prior to discharge via the main exhaust fans. See figures 3-41 and 3-42.

Each supply and exhaust fan may be manually started and stopped from the Control Room. System variables pertaining to normal operation are indicated on the main control room panel. Abnormal conditions, such as high temperature, low temperature, low building differential pressure, and high pressure drop across filters are annunciated either locally or on the main control room panel.

During periods of very cold weather, the Auxiliary Building Ventilation system may be secured to prevent freezing conditions in the Auxiliary Building. Compensatory measures are taken to ensure potential spread of radioactive material from contaminated areas to non-contaminated areas is identified and controlled. With no exhaust airflow through the vent stack, the ODCM requirements and Radiation Protection Procedures for radioactivity sampling will be followed to ensure appropriate quantification of effluent releases.

3.10.3.2.3 Design Features Important to the Defueled Condition

Neither the Fuel Handling Accident in the Fuel Building nor the Radioactive Waste Handling Event credit ventilation or filtration to prevent or mitigate the consequences of the accidents (see Chapter 5). The Auxiliary Building Ventilation System does provide an ALARA function and facilitates sampling and analyses of gaseous effluents. The components Important to the Defueled Condition required to ensure these functions are met are:

- Auxiliary Building Ventilation system supply and exhaust fans (as required)
- Auxiliary Building Ventilation system exhaust fan inlet vortex dampers (as required)
- Auxiliary Building Ventilation system exhaust HEPA filter banks
- Auxiliary Building Vent Stack effluent monitor (see Chapter 4)

3.10.3.3 Containment Purge

3.10.3.3.1 Design Bases

The Containment Purge system is designed to maintain acceptable environmental conditions in the Containment Buildings for personnel access and to prevent the spread of radioactivity from the Containment in the event of high Containment activity.

3.10.3.3.2 Normal Operation

The Containment Purge System, when required, supplies filtered, conditioned air to the Containment and exhausts filtered air back outside. It also has the capability to operate in a vacuum or pressure relief mode to handle normal pressure changes in Containment which result from Containment air temperature changes, barometric pressure changes, etc.

The supply and exhaust lines for the Containment Purge system each pass through two butterfly valves that are normally closed. A debris screen is installed in the opening of the supply and exhaust line to prohibit foreign material from entering the line and preventing the butterfly valves from closing. These valves are interlocked with the radiation monitoring system such that they will automatically close upon a high containment activity. The exhaust air passes through a HEPA filter bank.

The vacuum and pressure relief system consists of a line penetrating the Containment with two butterfly valves that are normally closed. Debris screens are installed in the line to prohibit foreign material from entering the line and preventing the butterfly valves from closing. These valves are interlocked with the radiation monitoring system such that they will automatically close upon a high containment activity.

See figures 3-43 and 3-44.

3.10.3.3.3 Design Features Important to the Defueled Condition

The Containment Purge system is associated with maintaining exposures ALARA and with personnel comfort and habitability. The features deemed Important to the Defueled Condition for these functions during venting/purging operations are:

- Containment Purge supply and exhaust butterfly valves
- Vacuum and pressure relief butterfly valves
- Debris screens
- Purge exhaust HEPA filter bank
- Interlocks with Containment SPING Air Monitor (see Chapter 4)

3.10.3.4 Auxiliary Ventilation Systems

The auxiliary ventilation systems are those ventilation systems that are operated to facilitate the general maintenance of the facility and whose function is deemed not to be ITDC. These ventilation systems circulate air for personnel comfort in the summer months, and in conjunction with the heating system, provide freeze protection in the winter months. Without the auxiliary ventilation systems in service, these same functions could be performed using portable fans and heaters. The auxiliary ventilation systems are comprised of the following:

- Main Turbine Building Ventilation System,
- Crib House Ventilation System,
- Portions of the Containment Ventilation System (not described as ITDC in section 3.10.3.3),
- Portions of the Auxiliary Building Ventilation System (not described as ITDC in section 3.10.3.2),
- Computer and Miscellaneous Equipment Room Ventilation System, and
- Diesel Generator Building Ventilation Systems.

3.10.3.5 Fuel Building Ventilation

3.10.3.5.1 Design Bases

The Fuel Building Ventilation system is designed to maintain acceptable ambient air temperatures for equipment operation and personnel habitability and provides effluent sampling for the exhaust flow.

3.10.3.5.2 Normal Operation

The Fuel Building Ventilation system supplies filtered outside air to the Fuel Building and exhausts filtered air back to the outside. Heating elements are installed in the main supply duct to provide heat to the Fuel Building. Additional heat may be provided by unit heaters located around the building. The exhaust fan draws air from the Fuel Building and past a radiation sampling monitor. The exhaust air passes through a HEPA filter unit prior to discharge.

The Fuel Building Ventilation system supply and exhaust fan are located on the roof of the Fuel Building. Local controls are provided for fan operation. Remote controls for both the supply and exhaust fan are located inside the Fuel Building.

If there is no exhaust airflow through the Fuel Building Ventilation system, the ODCM requirements for radioactivity sampling will be followed to ensure appropriate quantification of effluent releases.

3.10.3.5.3 Design Features Important to the Defueled Condition

Neither the Fuel Handling Accident in the Fuel Building nor the Radioactive Waste Handling Event credit ventilation or filtration to prevent or mitigate the consequences of the accidents (see Chapter 5). The Fuel Building Ventilation system does provide an ALARA function and facilitates sampling and analysis of gaseous effluents. The components Important to the Defueled Condition required to ensure these functions are met are:

- Fuel Building Ventilation system supply and exhaust ducts and fans
- Fuel Building Ventilation system exhaust HEPA filter unit
- Fuel Building Ventilation system exhaust air effluent monitor (see Chapter 4)

3.10.4 Fire Protection System

Zion Station utilizes the defense-in-depth concept, placing special emphasis on detection and suppression in order to minimize radiological releases to the environment. This system is, therefore, considered Important to the Defueled Condition. A detailed description of the plant's Fire Protection System is contained in the Fire Protection Report.

Unit 1 and 2 Containment Building air terminals as well as the 75 foot high 345kV tower are credited with providing lightning protection for the SFNI Cooling Towers and SFNI HVAC equipment as detailed in Reference 12.

3.10.5 Operating Control Stations

3.10.5.1 General Layout

The operating control stations consist of the Main Control Room for centralized control of the facility during defueled operations; and local stations for normal operation of the Radioactive Waste System and miscellaneous noncritical systems.

3.10.5.2 Design Basis

3.10.5.2.1 Control Room Design

The facility is equipped with a Control Room which contains controls and instrumentation for centralized operation of the facility and is occupied by qualified operating personnel.

The main control panels for the facility are totally enclosed walk-in panels, which are located in the Main Control Room. The front portion of each main panel is a duplex bench board which contains the operating controls. The rear portion consists of instrument racks containing power supplies, amplifiers, relays, etc., for the radiation monitoring and miscellaneous facility control systems. The front operating bench boards contain controls for the Service Water system. The 345-kV switchyard controls are located on a vertical panel near the center of the Main Control Room. Heating, Ventilating, and Air Conditioning controls are on a vertical panel near the center of the Main Control Room. A separate general services panel, also located near the center of the Main Control Room, contains controls for the Fire Protection System.

The primary objectives in the Control Room layout are to provide the necessary controls to operate the facility with sufficient information and alarm monitoring provided, thus ensuring safe and reliable operation under defueled conditions. Deviations from predetermined conditions will be alarmed, so the operator may take corrective action.

3.10.5.2.2 Annunciator and Audible Alarm System

A visual annunciator system with audible signals is provided to alert the operator to off-normal conditions requiring corrective action. Audible alarms will be sounded in appropriate areas throughout the facility if high radiation conditions are present.

3.10.5.2.3 Radwaste System Control Panels

The liquid and solid radwaste control panels are located in the Auxiliary Building. These panels contain all the controls and instruments to control and monitor the Radioactive Liquid and Solid Waste Disposal Systems.

3.11 Electrical Systems

3.11.1 Design Basis

The Electrical Power System to the station is designed to distribute electrical power to structures, systems, and components (SSCs) important to the defueled condition (ITDC) and other SSCs that support other activities that may be conducted at Zion Station.

3.11.2 System Description

3.11.2.1 Offsite Power System

Figure 3-45 shows the physical layout of the 345-kV switchyard and transmission facilities. The figure shows six transmission lines, two system auxiliary transformers and two main power transformer banks terminating on the 345-kV bus consisting of 10 circuit breakers. The transmission lines are installed two lines to a tower and two of these lines leave the switchyard on a separate right-of-way.

The control power for the 345-kV switchyard breakers is supplied by two 125-Vdc feeds (one fed from a Unit 1 battery and the other from a Unit 2 battery). The feeds from each battery establish separate trip circuits for the two trip coils in each breaker in the switchyard.

In addition, there are two independent 12-kV feeds from the commercial electrical distribution system. They supply two 12-kV to 480V step down Spent Fuel Nuclear Island (SFNI) transformers. These transformers provide the normal power supplies to the spent fuel pool support systems. The switchgear buses are located in the fuel building. Each independent line can supply power to the SFNI transformers.

3.11.2.2 Onsite Power System

3.11.2.2.1 AC Power Systems

The Auxiliary Power System provides a reliable source of power to structures, systems, and components (SSCs) important to the defueled condition (ITDC) and other SSCs that support other activities that may be conducted at Zion Station.

The basic arrangement of the plant electrical system is shown on the Single Line Diagram, Figure 3-46 for Unit 1 and Figure 3-47 for Unit 2.

Auxiliary power at 4160 V is provided by the system auxiliary transformer (142 for Unit 1 and 242 for Unit 2). The system auxiliary power transformers are rated at 55MVA (force oil air rating).

3.11.2.2.1.1 4160-V System

Power from the auxiliary transformers is distributed at four main 4160-V switch-groups (buses 142, 143, 144, and 145 for Unit 1 and buses 242, 243, 244, and 245 for Unit 2). Buses 142, 143, and 144 in turn feed 4160-V buses 147, 148, and 149 respectively (buses 242, 243, and 244 feed buses 247, 248, and 249 respectively).

Plant auxiliaries which have large power requirements, such as the Service Water pumps will be fed directly from 4160-V buses.

3.11.2.2.1.2 480-V System

The smaller plant auxiliaries are supplied from the 480-V unit substations which in turn derive their power from the main 4160-V buses.

The 480-V unit substation transformers are rated 1500 kVA, 4160 V, delta 480/277 V, wye, 3-phase. The 480-V switchgear is the draw-out type.

Motor control centers are fed from the 480-V unit substation load breakers and are strategically located throughout the Station. There are no motor control centers located within the Reactor Containment Building. The 480-V motor control centers are equipped with thermal magnetic circuit breakers for nonmotor loads and magnetic breakers and starters with thermal overload protection for the motor loads.

480-V power is supplied to the spent fuel pool support systems from the two 480-V SFNI switchgear buses located in the fuel building. The 12-kV/480-V transformers are each rated at 500-kVA, 480-V, wye, 3 phase.

The 480-V switchgear and motor control centers are metal-enclosed. They are provided with grounding and have the mechanical safeguards necessary to assure personnel protection and prevent or limit equipment damage during system fault or overload conditions.

3.11.2.2.1.3 120-Vac Instrument and Control Power System

The general instrumentation and control power at 120 Vac can be obtained from instrument inverters or 480- to 120-Vac, dry-type transformers and associated circuit breaker distribution panels which are an integral part of the 480-V system motor control centers. Motor starter control power is obtained from individual control power transformers associated with each motor control center motor starter.

3.11.2.2.1.4 Cable Derating

The allowable current carrying capacities (ampacities) for the various power cables and control cables (where applicable) were computed using Reference 11 such that the specific ampacity for each size cable was determined by applying the appropriate derating factor (0.6 for 25-42 conductors) from Table VIII, in accordance with note 3 (page V), to the ampacity of the identical cable in isolated conduit in air (as shown on pages 264 and 313), thus obtaining the ampacity for cables in solid metal trays without maintaining spacing.

3.11.2.2.1.6 Reliability of Power Supplies

Power to all ITDC related 4160 Vac and 480 Vac equipment is from the following sources:

1. a) A normal source from the system auxiliary transformer via buses 142, 143, 144, and 145 for Unit 1 and buses 242, 243, 244, and 245 for Unit 2. Buses 142, 143, and 144 normally supply buses 147, 148, and 149 respectively and buses 242, 243, and 244 normally supply buses 247, 248, and 249 respectively,

   b) 480-V SFNI switchgear buses 1 and 2 for spent fuel pool support systems.

2. a) A reserve source of offsite generated power from the opposite unit's system auxiliary transformer via bus 241 for Unit 1 buses 147, 148, and 149 and bus 141 for Unit 2 buses 247, 248, and 249. Tie buses and manually controlled circuit breakers are permanently installed for this connection,

   b) A bus crosstie is provided between SFNI switchgear bus 1 and 2 to allow either bus to supply the spent fuel pool support systems.

3. a) A standby source from onsite diesel generators feeding buses 147, 148, and 149 for Unit 1 and buses 247, 248, and 249 for Unit 2.

   b) An emergency hookup connection to allow for a temporary power supply to feed the SFNI buses.

Electrical interlocks consisting of mechanically actuated auxiliary breaker position switches associated with the reserve power source and standby power source feed circuit breakers are provided in the breaker close circuitry. These interlocks prevent an operator from closing both the reserve source and standby source feed breakers for each bus, which if not prevented, could result in paralleling the standby and reserve power sources.

No electrical or mechanical interlocks are available for the SFNI feed breakers. These breakers are controlled by operating procedures.

3.11.2.2.2 DC Power Systems

3.11.2.2.2.1 125-Vdc Power System

Each unit is provided with two sources of 125-Vdc power (each with its own battery, battery charger and distribution bus), plus a fifth physically separate and electrically isolated source of 125-Vdc power. Figure 3-48 shows (in one-line form) that this fifth 125-Vdc source (Battery 011) supplies dc power to two 125-Vdc distribution buses (011-1 for division 17 Unit 1 loads and 011-2 for division 27 Unit 2 loads).

The five batteries are each housed in separately ventilated rooms within the Auxiliary Building and are provided with reinforced battery racks. Separate ventilating (exhaust) ducts are provided for each Battery Room (111, 112, 211, and 212). Each duct rises more than 10 feet vertically (and independently) above the battery room ceiling (a path distance of at least 20 feet between the Battery Rooms) where they join a common duct to the suction plenum for two full-capacity redundant exhaust fans. Thus adequate ventilation is provided for each Battery Room at all times. The ventilation of Battery Room 011 is accomplished via independent ducts and exhaust fans. The battery room ventilation is supplied from the Computer and Miscellaneous Equipment Room Ventilation (OV) system. This ventilation feature is not considered important to the defueled condition since portable fans and heaters can perform the heating and cooling functions and can also keep the hydrogen gas produced by the batteries below explosive limits.

The DC System is seismically qualified for the Design Basis Earthquake (DBE). The qualification reports for the battery cells, racks, chargers, and the dc distribution panels and cabinets are contained in References 4 through 10, respectively.

The DC System at Zion is designed to allow the cross-tying of dc buses between units. The tie between buses 111 and 211, buses 112 and 212 (dc buses for Unit 1 and Unit 2), and buses 111 to 011-2, battery 011, 011-1 to 211, are each provided with two normally open, manually operated air circuit breakers mechanically interlocked with a key lock.

During normal operation, the batteries are kept fully charged by the battery chargers.

The five batteries and associated distribution panels supply the 125-Vdc control power to the switchgear as shown in Table 3-15.

125-Vdc power for the SFNI breaker control functions is provided from a rectifier that is part of the SFNI electrical system.

3.11.2.3 Design Features Important to the Defueled Condition

Electrical equipment necessary to perform the following functions is regarded as Important to the Defueled Condition:

1. Adequate offsite power from the switchyard to supply at least one System Auxiliary Transformer (Transformer 142/242) and one SFNI transformer. Adequate 4160-V, 480-V, and 120 Vac distribution bus equipment for the following reasons:

   a. Provide power to the Fuel Handling system as discussed in section 3.9.3
   b. Provide power to the Spent Fuel Pool Cooling system as discussed in section 3.9.4
   c. Provide power to the Spent Fuel Pool Secondary Loop Cooling system as discussed in section 3.10.1.
   d. Provide power to the Fuel Building Ventilation system as discussed in section 3.10.3.5.
   e. Provide power to the Auxiliary Building Ventilation system as discussed in section 3.10.3.2
   f. Provide power to the Containment Purge system equipment as discussed in section 3.10.3.3
   g. Provide power to the Liquid Radwaste system equipment as discussed in section 4.5.2
   h. Provide power to the Solid Radwaste system equipment as discussed in section 4.5.3
   i. Provide power to the Process Radiation Monitoring equipment as discussed in section 4.6.2
   j. Provide power to the Area Radiation Monitoring equipment as discussed in section 4.6.3

   Note: 480 V to 120 V inverters, to supply instrument power as discussed in section 3.11.2.2.1.3, are not considered ITDC.

2. 125 Vdc distribution bus 111, and its battery, to realign the switchyard.

3.11.3 Fire Protection for Cable Systems

The Zion Station Fire Protection Report provides fire protection information and the effect of postulated fires on plant cable systems.

3.12 References, Section 3.0

1. Spent Fuel Pool Modification for Increased Storage Capacity, Revision 0, dated November 15, 1991

2. Zion Station Calculation No. 22S-0-110S-0060, "Evaluation of the Zion Spent Fuel Pool for an Accident Temperature of 212 Degrees F."

3. November 18, 1996 ComEd Response to NRC Final Report on Spent Fuel Storage Pool Safety Issues.

4. Gould Co. Calculation SO 7-0432124-EQ dated 1-8-71

5. Power Conversion Inc. letter dated 5-25-71 and Gaynes Testing Lab report on Job #7115, dated 3-11-71.

6. General Electric Co. letter dated 2-26-71.

7. General Electric Co. Report #70ICS101, dated 2-18-71.

8. Gould Co. Calculation SO 7-043123-EQS, dated 1-8-71.

9. Gould Co. letter dated June 14, 1971 summarizing results of test performed by TII Testing Lab, Inc., College Point, NY.

10. Gaynes Testing Lab Report #71448A dated November 9, 1971.

11. AIEE/IPCEA Power Cable Ampacities, Volume I – Copper Conductors, (AIEE Publication No. S-135-1, IPCEA Publication No. P-46-426) – 1962.

12. Zion Station Calculation No. 22S-B-123M-0080, "SFNI Cooling Tower and HVAC Lightning Evaluation."

TABLE 3-3

SEISMIC CLASS I SYSTEMS AND COMPONENTS

PIPING SYSTEMS

- Service Water (partial)
- Liquid Radwaste (partial)
- Fire Water (partial)

COMPONENTS

- Spent fuel pool cooling loop pump, strainers, valves, and piping which are in Seismic Class I structures or concrete
- Spent fuel storage pool, including spent fuel storage racks
- Spent fuel pit bridge and hoist
- Auxiliary & Fuel Building Crane
- Hangers, Supports & Snubbers for Seismic Class I piping systems
- Valves in Seismic Class I piping systems
- Radiation Monitoring (partial)

TABLE 3-9 (1 of 3)

SPENT FUEL POOL CC OLING SYSTEM COMPONENT DESIGN DATA

General		
System cooling capacity, Btu/hr		29.8×10^6
Spent fuel pool volume ft^3		80.0×10^3
SPENT FUEL POOL HEAT EXCHANGER		
Number (shared)		2
Design heat transfer, Btu/hr		14.9×10^6
	Shell	Tube
Design pressure, psig	150	150
Design temperature, °F	200	200
Design flow rate, lb/hr	1.49×10^6	1.14×10^6
Design inlet temperature, °F	95	120
Design outlet temperature, °F	105	106.9
Fluid	Secondary Loop Cooling Water	Spent fuel pool water (borated demineralized water)
SPENT FUEL POOL PUMP		
Number (shared)		2
Design pressure, psig		150
Design temperature, °F		200
Design flow rate, gpm		2300
Minimum developed head, ft		125
Temperature of pumped fluid, °F (Nominal)		80 to 180
Fluid		Spent fuel pool water (borated demineralized water)
NPSH, ft		15
Material		Austenitic stainless steel
SPENT FUEL POOL SKIMMER PUMP		
Number (shared)		1
Design pressure, psig		50
Design temperature, °F		200
Design flow rate, gpm		100
Minimum developed head, ft		50
Temperature of pumped fluid, °F (Nominal)		75 to 150
Fluid		Spent fuel pool water
NPSH, ft		15
Material		Austenitic stainless steel

TABLE 3-9 (2 of 3)

SPENT FUEL POOL COOLING SYSTEM COMPONENT DESIGN DATA

SPENT FUEL POOL DEMINERALIZER	
Number (shared)	2
Type	Flushable
Vessel design pressure,	
Internal, psig	200
External, psig	15
Vessel design temperature, °F	250
Design flow rate, gpm Maximum	100
Minimum D/F	10
Normal flow, gpm	100
Normal operating temperature, °F	120
Normal operating pressure, psig	Approximately 50
Resin type	Anion and/or cation
SPENT FUEL POOL FILTER	
Number (shared)	2
Type	Replaceable (Cage Assembly or single element)
Internal design pressure, psig	200
Design temperature, °F	250
Rated flow, gpm	Nom. 100, Max. 150
Filtration requirement	98% retention of particles above 25 micron
SPENT FUEL POOL SKIMMER FILTER	
Number (shared)	1
Type	Replaceable (Cage Assembly or single element)
Internal design pressure, psig	200
Design temperature, °F	250
Rated flow, gpm	100
Filtration requirement	98% retention of particles above 25 micron
UNDERWATER (IN-POOL) SPENT FUEL POOL DEMINERALIZER	
Number	1
Vessel Design Pressure, psig	50
Design Flow Rate, gpm	75
Vessel Material	Stainless steel
Resin Capacity, cu ft	30

TABLE 3-10

DELETED

TABLE 3-11

DELETED

TABLE 3-12

DELETED

TABLE 3-13

DELETED

TABLE 3-14

SERVICE WATER SYSTEM FLOW REQUIREMENTS

Following is the maximum total plant service water flow (in GPM) required by essential components.

	EQUIPMENT	Flow (gpm)
1.	Fire Protection System	3000
2.	Service Water Pump Seals	108
	Total	3,108

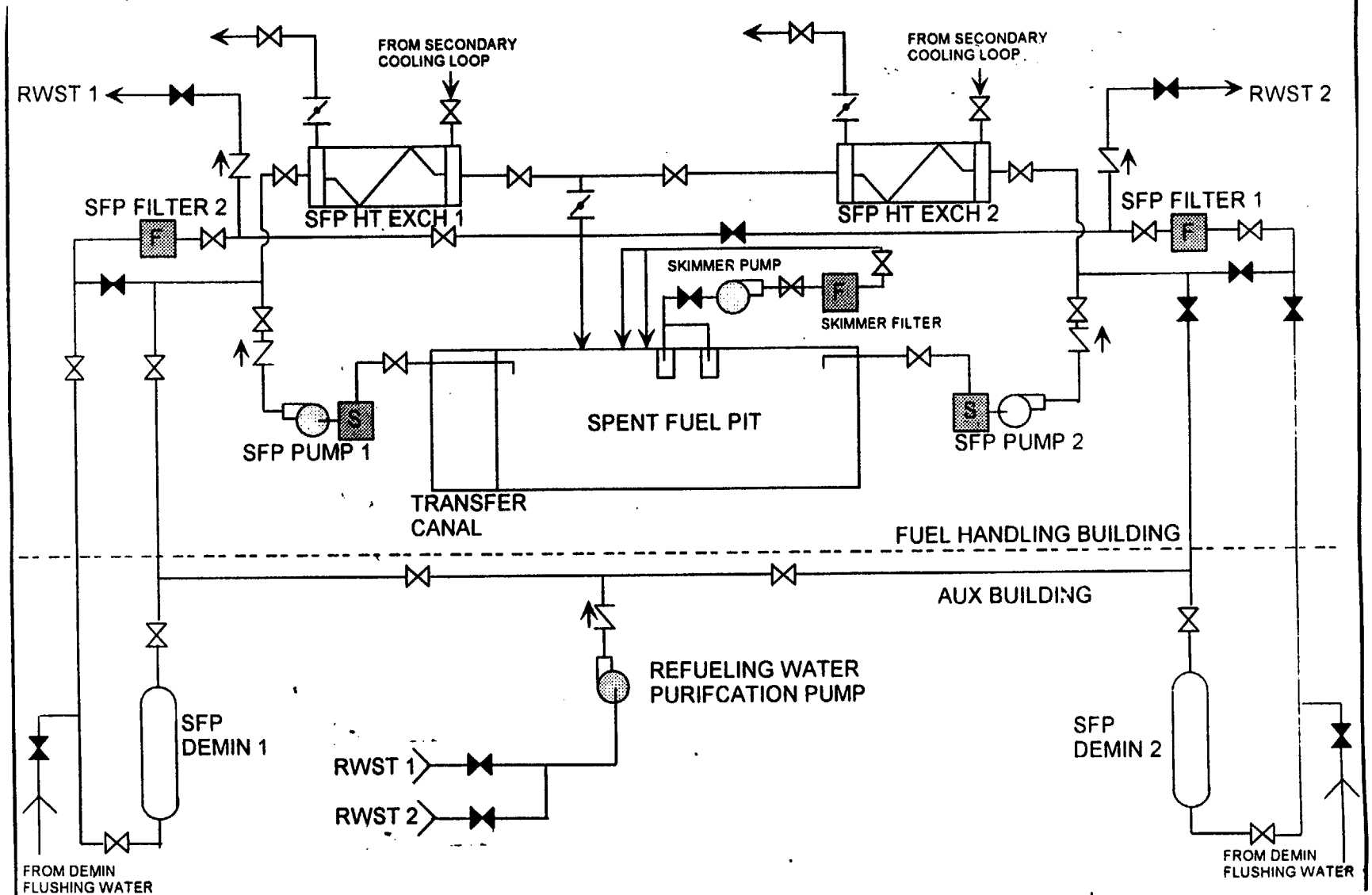

ZION STATION DSAR

Figure 3-32

Spent Fuel Pool Cooling and Cleanup System

(Simplified)

October 2000

THIS PAGE INTENTIONALLY LEFT BLANK

ZION STATION DSAR

Figure 3-39

COMPONENT COOING WATER SYSTEM
(SIMPLIFIED)

October 2000

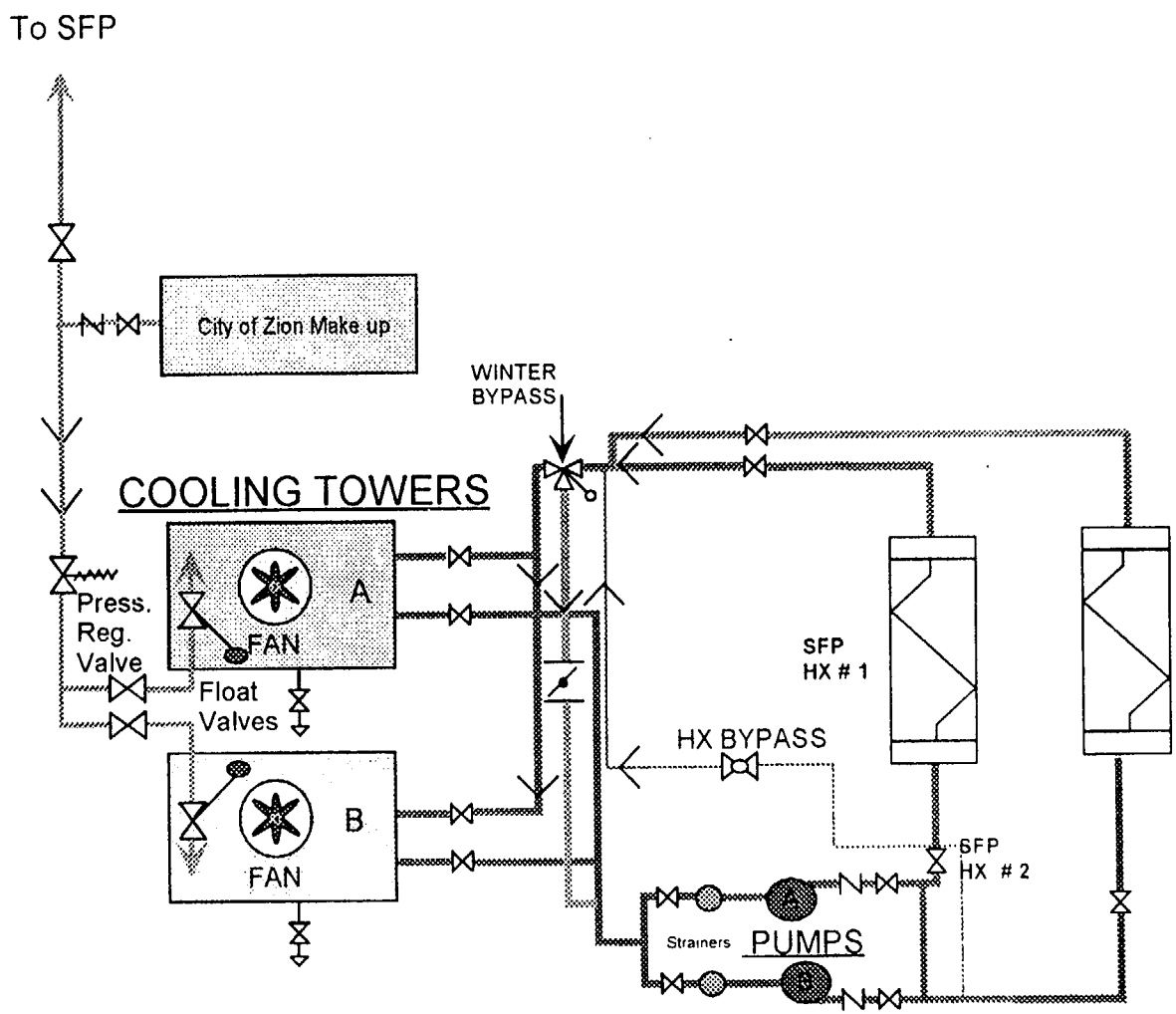

ZION STATION DSAR

Figure 3-39A

Spent Fuel Pool Secondary Loop Cooling System

October 2000

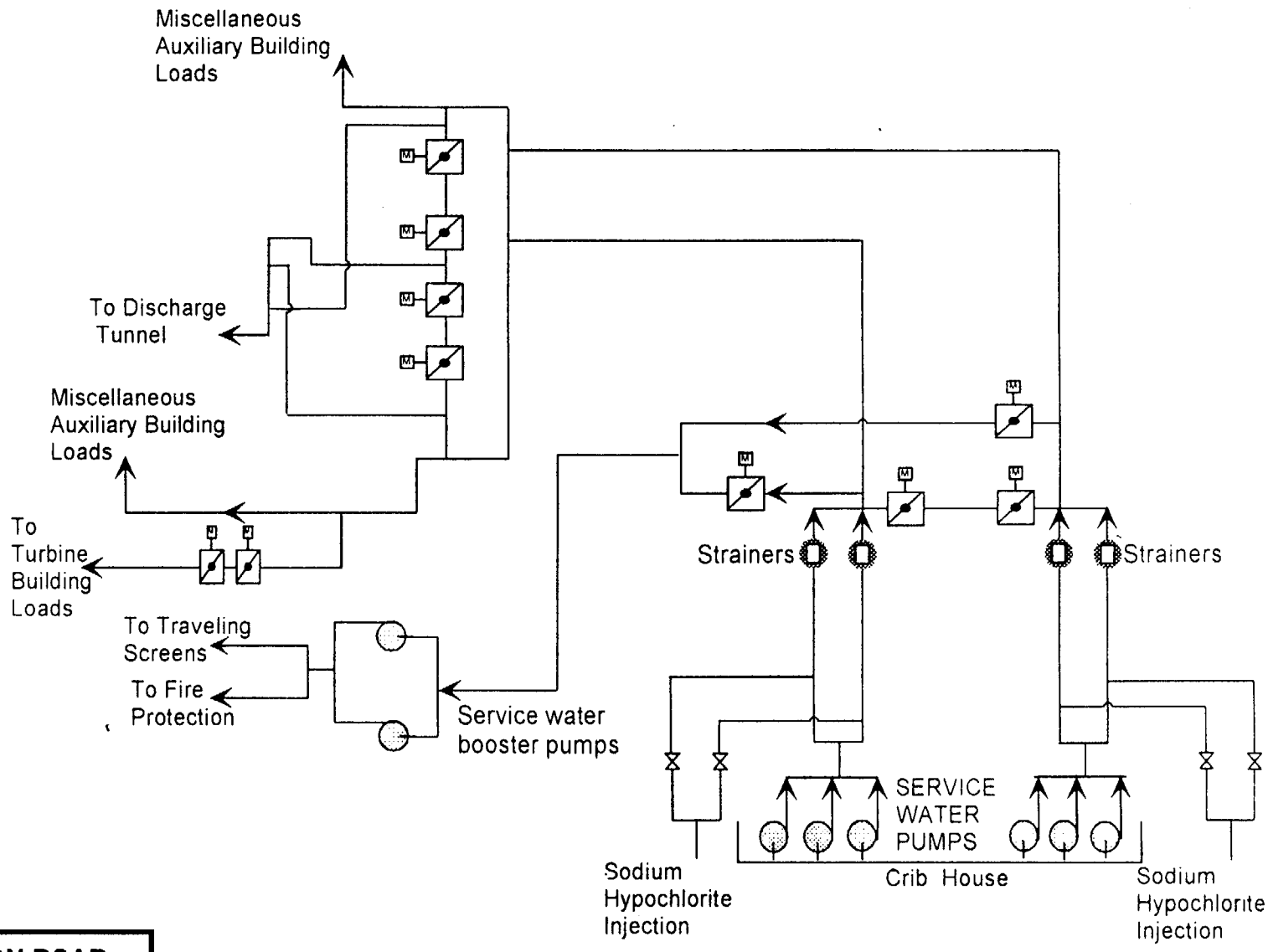

ZION STATION DSAR

Figure 3-40

SERVICE WATER SYSTEM (SIMPLIFIED)

October 2000

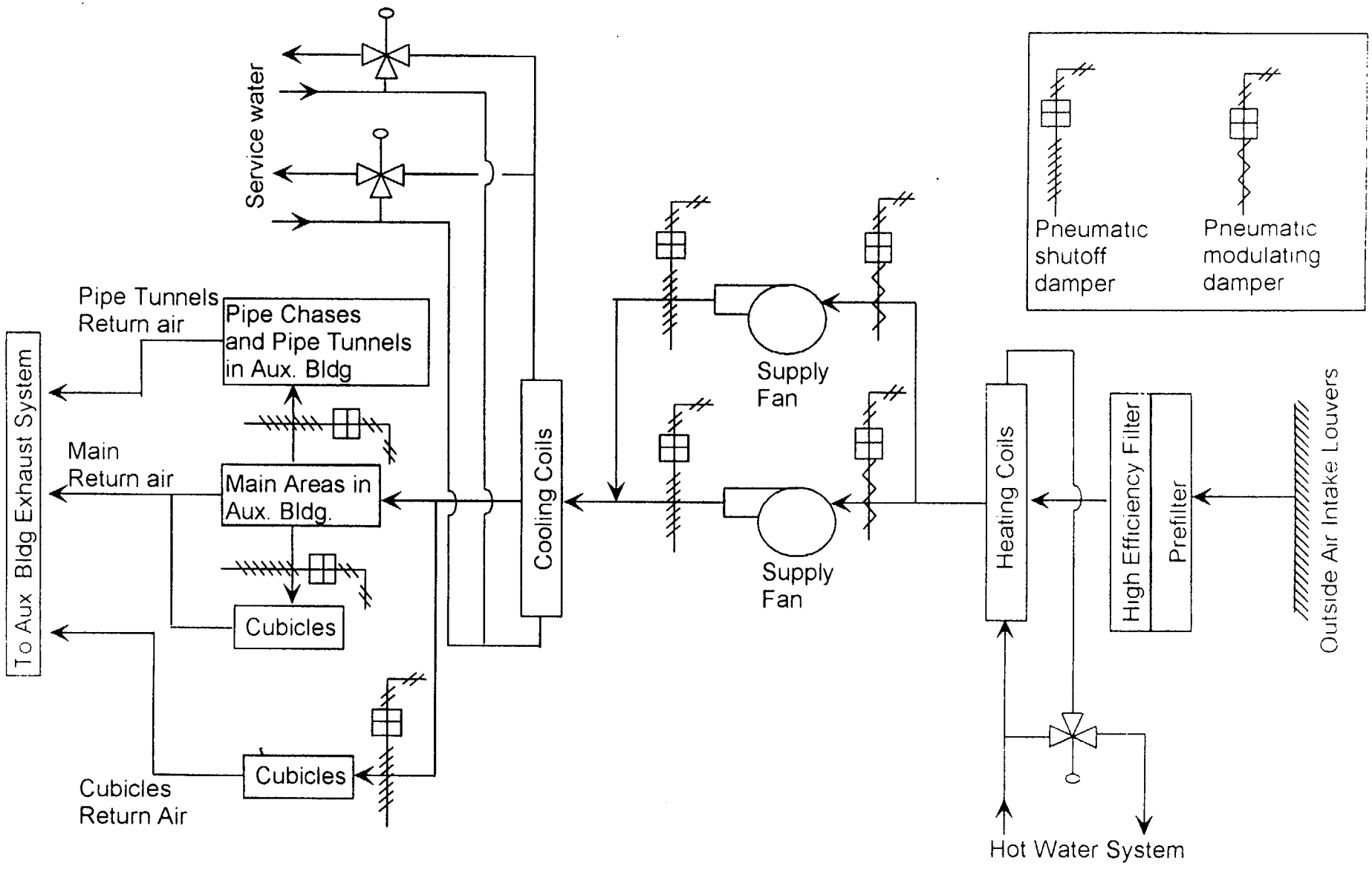

ZION STATION DSAR

Figure 3-41

Auxiliary Building Ventilation Supply System

(SIMPLIFIED) October 2000

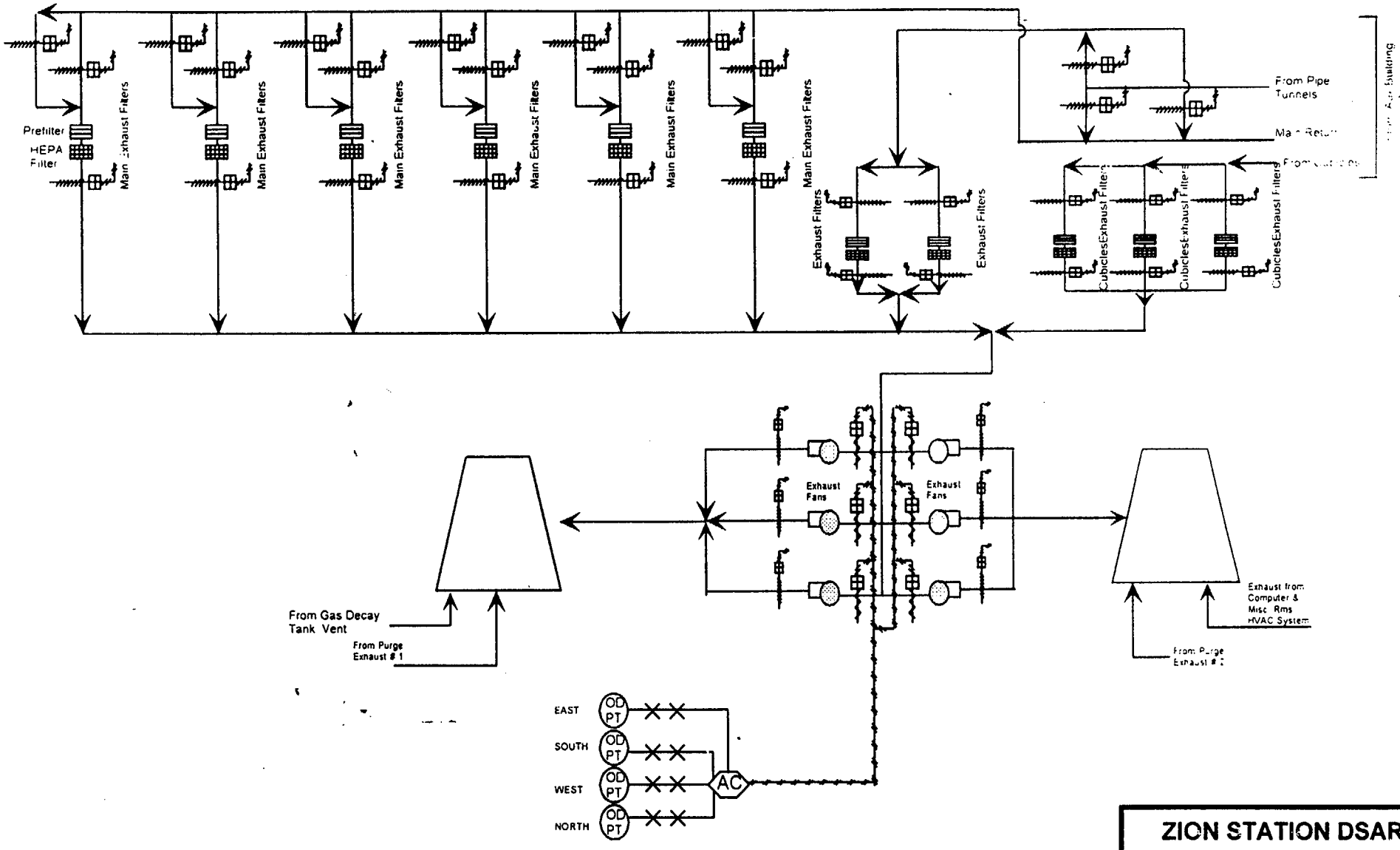

ZION STATION DSAR

Figure 3-42

Auxiliary Building Ventilation Exhaust System

(SIMPLIFIED) October 2000

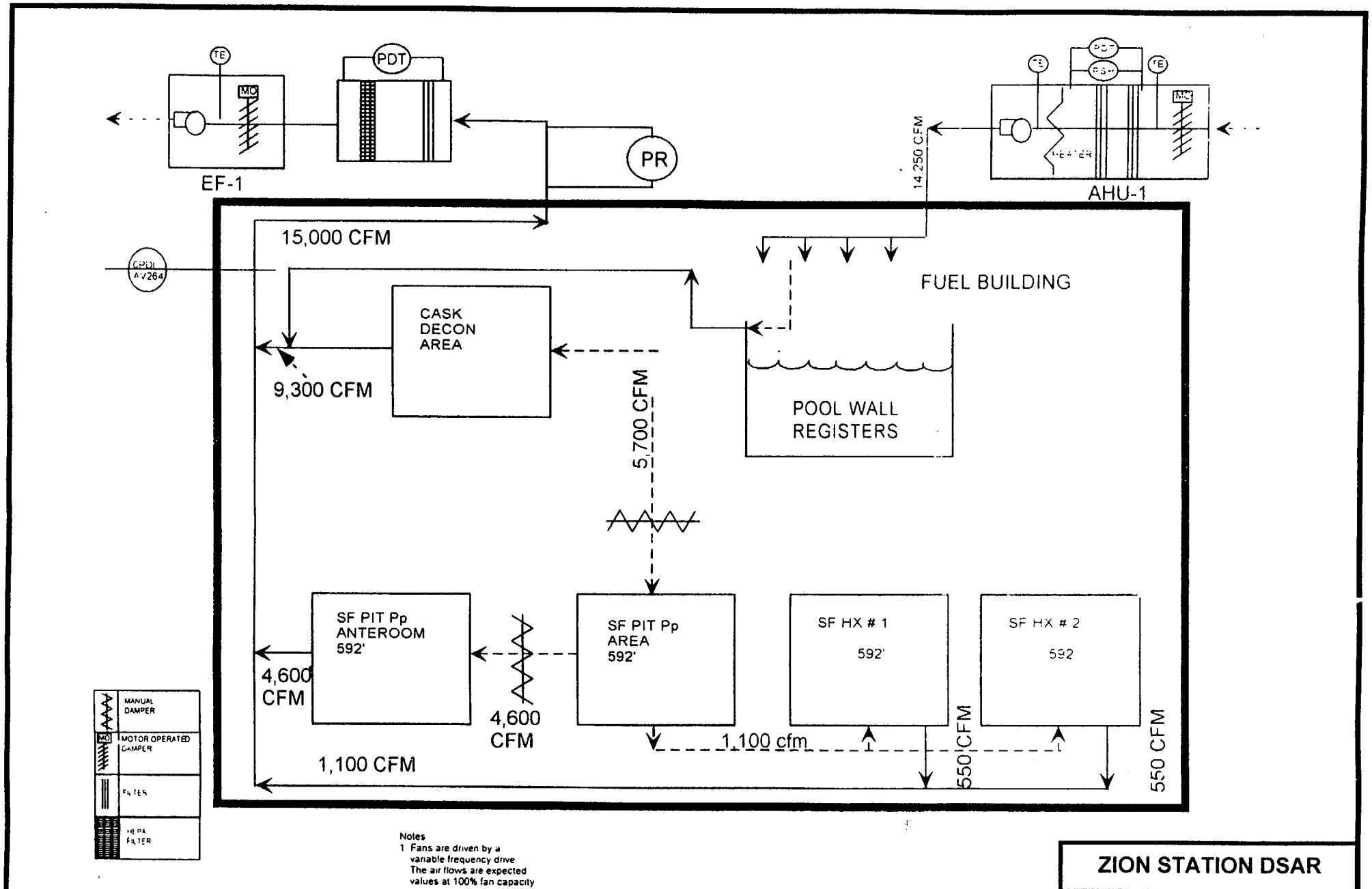

Notes
1 Fans are driven by a variable frequency drive The air flows are expected values at 100% fan capacity

ZION STATION DSAR

Figure 3-42A

Fuel Building Ventilation System

(SIMPLIFIED) October 2000

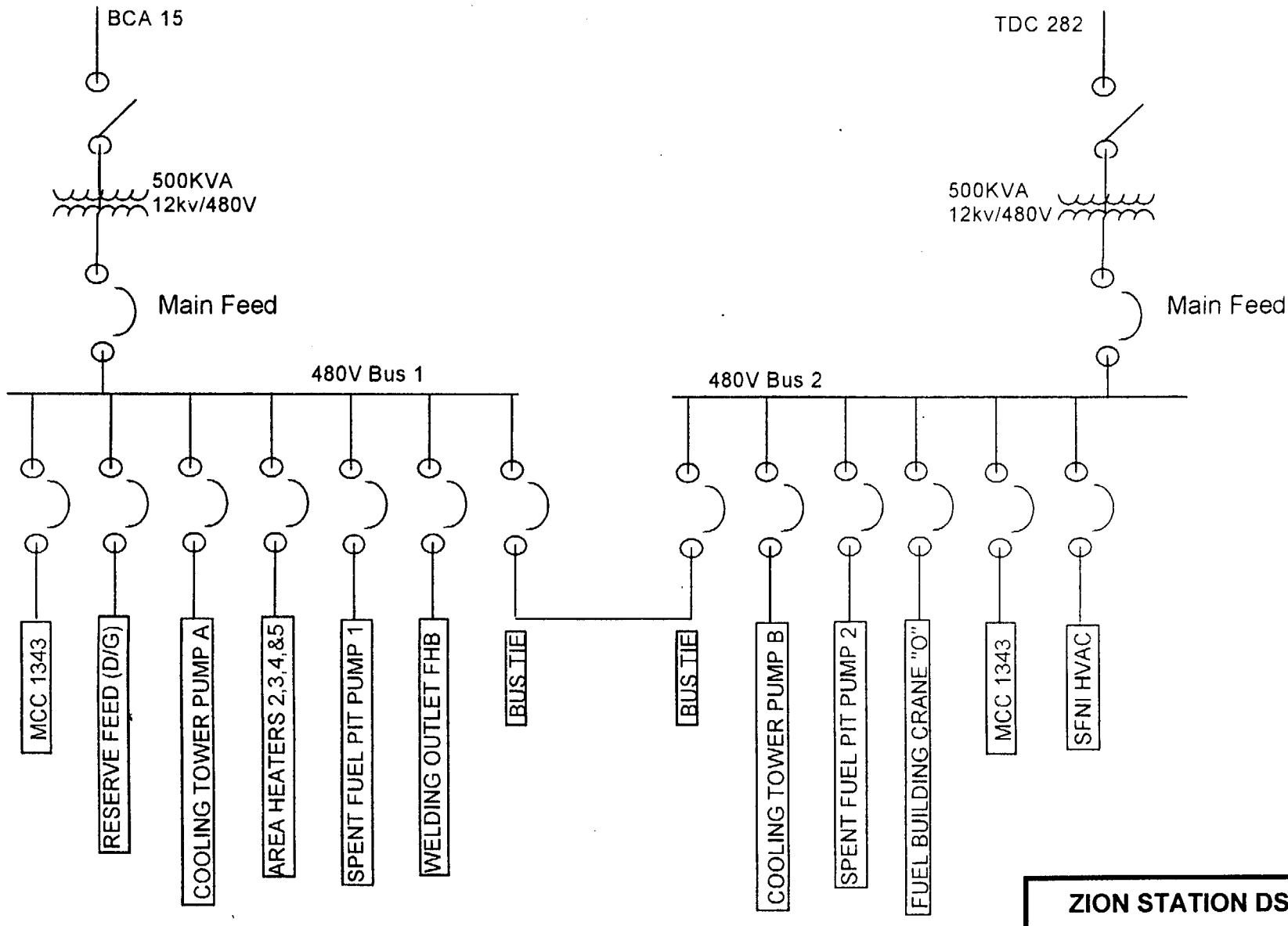

ZION STATION DSAR

Figure 3-45A

Spent Fuel Nuclear Island Offsite Power Supply

(SIMPLIFIED) October 2000

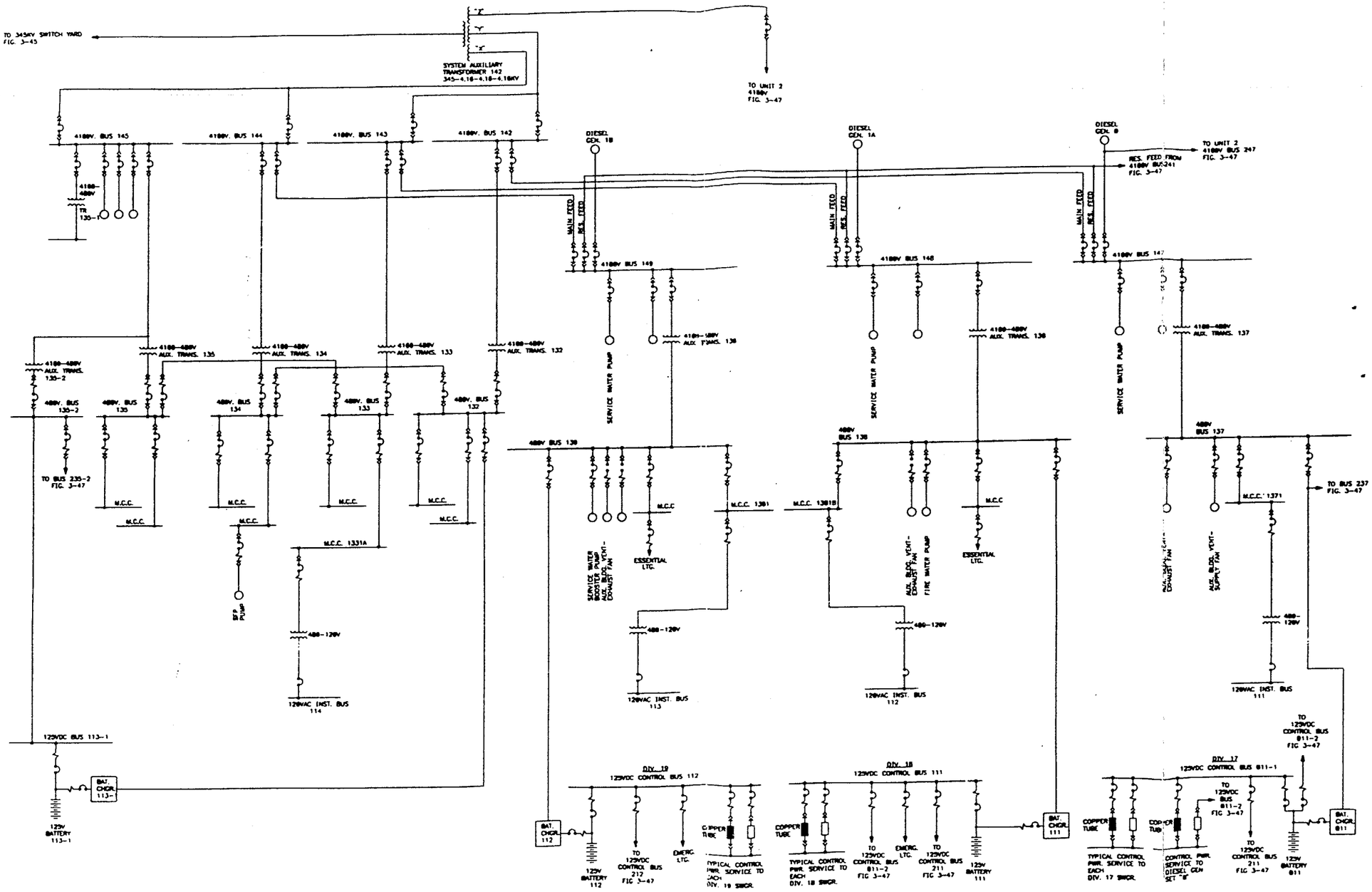

ZION STATION DSAR

Figure 3-46

ZION STATION SINGLE LINE DIAGRAM – UNIT 1

OCTOBER 2000

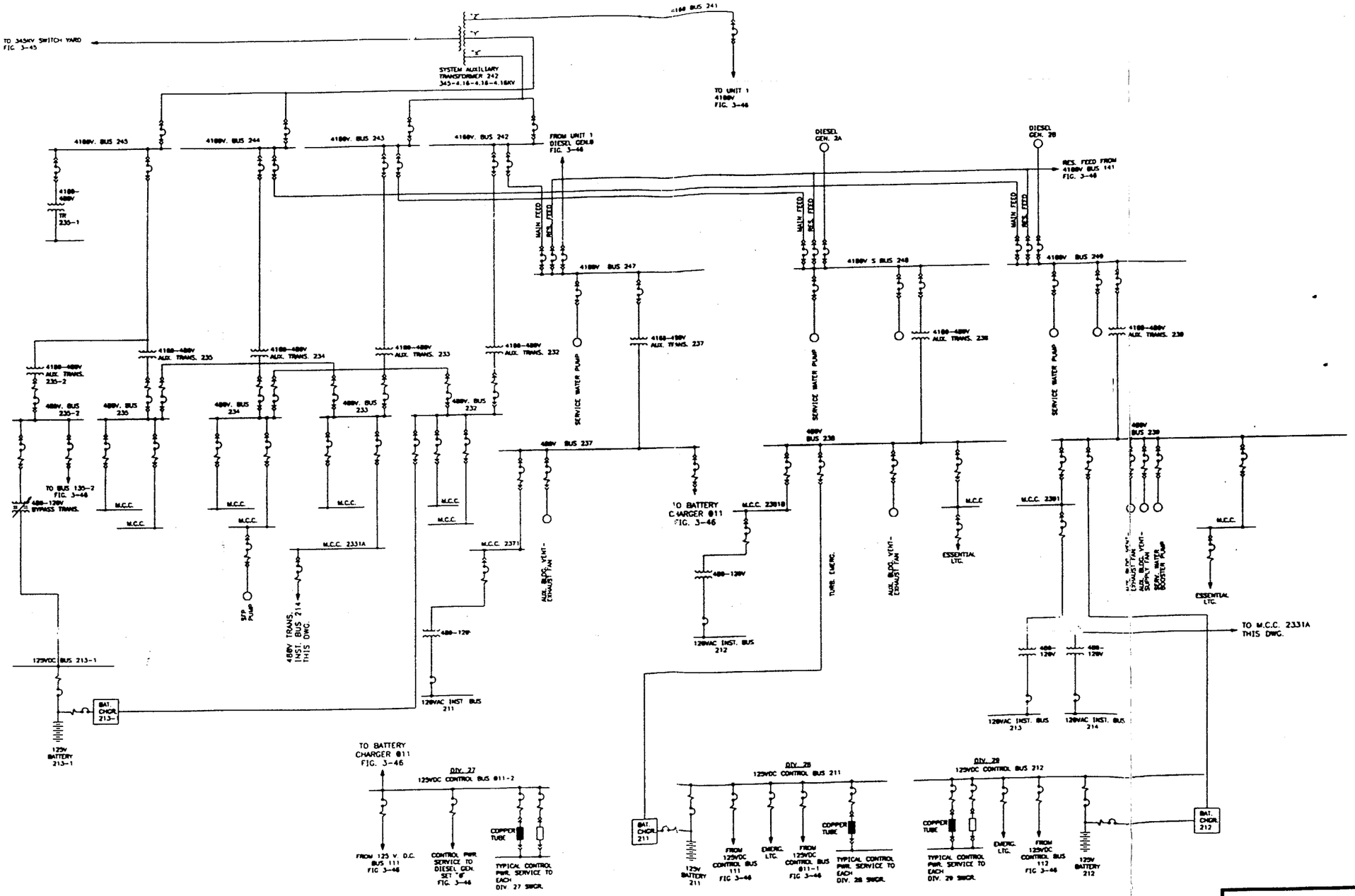

ZION STATION DSAR

Figure 3-47

ZION STATION SINGLE LINE DIAGRAM – UNIT 2

OCTOBER 2000

4.3 Radiation Protection Design Features

4.3.1 Shielding

The nuclear radiation shielding has been designed to prevent persons from being exposed to radiation in excess of that allowed by 10CFR20 and 10CFR100.

The source terms used in the design of plant shielding are based on full power operations, reactor shutdown, and design basis accidents. In the defueled condition, the source term of prime importance is from the spent fuel assemblies that are stored in the spent fuel pool. In addition, and to a lesser extent, filters and resins used in the processing of radioactive liquids also provide a source of radiation which require shielding for personnel protection. The source term values used in the original design of plant shielding conservatively bound the design requirements for the permanently defueled condition.

The following administrative procedures will be used to supplement the protection afforded by shielding:

1. Control of access to radiation areas,
2. Wearing of protective clothing and equipment,
3. Use of portable, stationary, personnel radiation monitors, and
4. Recording of personnel exposures.

4.3.1.1 Shielding Description

4.3.1.1.1 Auxiliary Building

Shielding protecting general access areas in the Auxiliary Building is designed to reduce radiation levels to an acceptably low level. Therefore, the Auxiliary Building is considered ITDC. General access areas are entered through access control stations and access is controlled through the Radiation Protection Program.

Concrete shielding is provided in the following major Auxiliary Building areas:

Mixed Bed Demineralizer Cubicles
Reactor Coolant Filter Cubicles
Radwaste Drum Fill and Storage Areas
Spent Resin Storage Tank Cubicle

A shielded drum is used to remove a spent cartridge filter and transport the filter by means of a dolly to the Radwaste Facility as necessary.

4.3.1.1.2 Fuel Handling Building

The Fuel Handling Building houses the spent fuel pool and associated pumping, cooling, and filtering equipment and is considered ITDC. The spent fuel pool provides water shielding of approximately 25 feet over the stored spent fuel. The minimum wall thickness of the pool is 6 feet 0 inches of ordinary concrete.

Concrete shielding is provided for the following spent fuel pool service equipment:

Heat Exchangers
Pumps
Skimmer Filter
Demineralizer After Filter

4.4 Health Physics Program

4.4.1 Equipment, Instrumentation, and Facilities

4.4.1.1 Personnel Monitoring

All personnel entering radiologically posted areas onsite are required to wear personnel monitoring devices, except for visitors. The minimum requirements include an electronic dosimeter (or its equivalent) and a thermoluminescent dosimeter (TLD) badge. Additional dosimeters such as finger rings, electronic dosimeter, high range pocket dosimeter, neutron dosimeter, etc. are required when radiological conditions warrant their use. Visitors to the station who enter radiologically posted areas are required to either wear the minimum dosimetry described above, or they are provided with an escort who will wear an extra TLD badge to collectively monitor their dose. As a minimum, each visitor will wear an electronic dosimeter (or its equivalent) inside posted areas.

As a general rule, the TLD badge will provide the official record of personnel exposure. If this device is lost or fails to respond properly, the official record will be determined by a health physicist after evaluating electronic dosimeters, radiation surveys, radiation timekeeping records, etc. The electronic dosimeter readings (or equivalent) and applicable timekeeping results are normally recorded daily. These records are routinely reviewed by radiation protection management and, if applicable, by management in the individual's work group. The TLD badges are changed at regular intervals. Badge results are reviewed by Health Physics Management and are entered in the Commonwealth Edison Company computerized dose records system. These official and permanent records provide the exposure data for the administrative control of radiation exposure. Required exposure reports are made by radiation protection management utilizing the dose records system.

A portal personnel radiation monitor is provided at the plant exit for monitoring of surface and internal activity of people leaving the plant. The portal monitor provides for complete head-to-foot coverage. The portal console monitor located on the portal frame includes status lights including a contamination alarm. The contamination signal from the console alerts personnel to the contamination condition so that the proper action can be taken.

Surveillance requirements for radioactive liquid releases are stipulated in the Offsite Dose Calculation Manual, Section 12.3. Liquid waste, low enough in activity level to be released, is discharged on a batch basis from one of two 30,000-gallon lake discharge tanks. The tank containing the batch to be discharged is isolated so that no additional waste can be added to it. The batch of liquid waste is mixed by recirculation to assure uniformity and is then sampled. The sample drawn from the lake discharge tank is analyzed for gross alpha, gross beta, radio-isotopic profile, and tritium activity. Based upon this analysis, a discharge rate is determined so that when the batch is released and diluted by the plant circulating water and/or service water, the individual radio-isotopic concentrations in the discharge leaving the plant site is less than the allowable concentration limits. Normally, the waste discharge is a small percentage of allowable concentration limits. At no time during waste discharge is the water leaving the plant and entering the lake above the allowable concentration limits.

Before liquid waste can be released from a lake discharge tank, a locked closed valve must be opened. The key for this valve is retained by the operations department personnel, and the analysis of the sample must be approved by the shift supervisor or his designated alternate. As a further backup, a radiation detector monitors the radioactive system discharge line that feeds the circulating water discharge line. Upon detecting an abnormal level, a valve closes and an alarm signal is actuated. Detailed records are maintained of all radioactive waste discharged to the environs. A simplified sketch of the Liquid Waste System is provided as Figure 4-1. Specific tank details are listed in Table 4-1.

4.5.2.3 Design Features Important to the Defueled Condition

The Liquid Waste Management System, as described in section 4.5.2.2, is considered Important to the Defueled Condition.

4.5.2.4 Wastewater Treatment Facility

The Wastewater Treatment Facility (WWTF) is designed to treat nonradioactive and low level radioactive liquid from many facility sources including building roof runoff and the turbine building fire sump, which receives input from the turbine building equipment and floor drains, and the fuel pool cooling tower blowdown. The Steam Generators may also be drained to the turbine building fire sump in the future. To prevent excessive contamination of the WWTF, the fire sump discharge is monitored for radioactivity and sampled and analyzed per the ODCM. Should high radioactivity be detected, piping connections are in place to divert sump fluids for radwaste processing. The critical treatment units in the WWTF are provided in duplicate to provide operational reliability and maintenance capability.

The WWTF is designed to remove suspended solids and oil to the level acceptable to the Illinois Environmental Protection Agency and to ensure compliance with the facility National Pollutant Discharge Elimination System (NPDES) permit. Since the wastewater discharge rates are variable, an equalization tank is provided to maintain a more nearly uniform flow to the treatment facilities. The WWTF also includes other equipment such as: mixing tanks, mixers, oil skimmers, flocculators, oil coalescers, clarifiers, sludge drying beds, filters, etc.

Discharge from the WWTF is by gravity to the Intake forebay.

4.5.3.2.4 Processing of Dry Active Waste

All DAW is segregated for waste type.

Compressible wastes may be compacted to reduce volume. A hydraulic drum compactor is located adjacent to the decontamination pad at the north end of the Auxiliary Building, El 592'. The compactor is operated locally and exhaust air is vented through HEPA filters, or containers are shipped offsite for further volume reduction and then burial. Some containers may be sent directly to burial.

Non-compressible wastes are packaged in shipping containers. Containers are visually inspected for structural integrity prior to packaging for shipment. Because of the low activity, DAW can be stored until enough is accumulated to permit: 1) economical transportation to an offsite burial ground for final disposal, or 2) transportation to an offsite facility for further volume reduction.

4.5.3.2.5 Waste Storage

Storage of all containers of waste in final form is either in the Drumming or Shipping Rooms, El 592'. Liners and packaged radwaste material may be stored in the Interim Radwaste Storage Facility (IRSF) which is considered ITDC. Additional storage for DAW is provided outside and in the DAW Storage Buildings.

4.6 Radiation Monitoring Systems

4.6.1 Design Bases

The Radiation Monitoring System is designed to detect, compute, indicate, annunciate and record the radiation levels at selected locations in the plant. The system is divided into the following subsystems:

1. The process radiation monitoring system, which includes the effluent monitors, is designed to provide early warning of increasing radiation activity due to a malfunction of plant equipment, and to monitor radioactive discharges to the environment to ensure concentrations do not exceed specified limits.

2. The area radiation monitoring system is designed to alert personnel of increasing radiation activity in the fuel building that might result in a radiation health hazard or indicate a degradation of fuel rod integrity.

In the defueled condition, radioactive material exists in the form of particulates and noble gases. Radioactive isotopes of iodine present during normal plant operations are no longer present. As such, the instrument channels in the radiation monitoring system monitor either particulates or gases.

None of the radiation monitors are relied upon to initiate an accident mitigation function for the events described in Chapter 5.0. In the defueled configuration, potential radiological events of concern focus on fuel building activities (i.e., spent fuel) and liquid releases to the lake. The process radiation monitoring system and the area radiation monitoring system provides general radiological monitoring as well as specific information on the dispersion and concentration of radioactivity in the event of a radiological event in the fuel building or an abnormal liquid release to the lake. This enables personnel to evaluate and respond to an event accordingly.

4.6.2 Process and Effluent Radiological Monitoring and Sampling Systems

4.6.2.1 System Description

The Process Radiation Monitoring System consists of channels which primarily give early warning of an equipment or system malfunction and also warn personnel of increasing radiation which might result in a radiation health hazard.

All radiation monitoring channels employ instrument failure alarms at the radiation monitoring cabinets, at local indicators (where provided), and on the Radiation Monitoring Display System (RMDS) in the Main Control Room. Instrument failure alarms are initiated upon failure of the radiation monitor, loss of detector signal, loss of power, or, for offline detectors, loss of sample flow. Control interlocks fail in the high radiation position upon instrument failure and must be manually reset.

Radiation monitor trip points are established in accordance with the Offsite Dose Calculation Manual (ODCM) to ensure "an as low as practicable" site boundary dose is obtained which is consistent with the design characteristics of the monitoring equipment, and acceptable operating considerations.

The process Radiation Monitoring System provides radiological monitoring of key areas and activities at the station. The primary areas of focus for the current radiation monitoring system are the fuel building and liquid effluent pathways. In general, the monitors provide both local and remote indication.

4.6.2.1.1 DELETED

4.6.2.1.1.1 Containment SPING Air Monitor

The containment SPING air monitor is designed to supply the operator with information on the beta particulate activity in the containment air during purging operations. A high radioactivity alarm from the containment SPING air monitor will automatically institute containment ventilation isolation by closing the pressure and vacuum relief isolation valves and the containment purge isolation valves.

The monitor draws its sample from the containment atmosphere by a sample line located at El 617' of Containment near the containment wall approximately midway between the purge valves and the personnel hatch. The sampled air is analyzed in a closed system outside of the containment, and then returned to the containment. Moisture removal equipment is installed to remove condensate from the air sample. The sample is passed through a filter paper which collects particulate matter and is viewed by a beta scintillation detector. The air sample is then monitored before being returned to the containment at El 604'.

The detector output is transmitted to the SPING system control terminal console in the Control Room and displayed on the RMDS when the appropriate screen is selected. The radioactivity level is output on the console at the request of the operator. High radioactivity indications are displayed by an alarm and automatic data output at the control console. The system can detect, quantify, and identify alpha and beta particulate. The monitors are located in the Fuel Building and alarm locally.

Isolation valves are installed on the inlet and discharge sample lines to the monitors to allow for maintenance and calibration.

4.6.2.1.1.2 Auxiliary Building Vent Stack SPING Air Monitor

This vent stack SPING continuously monitors the vent stack effluent for beta and alpha particulate and noble gas. The monitor outputs data and alarms to the SPING central control console.

This monitor outputs low flow and flow irregularity alarms to the control console.

This SPING monitor has no self-contained pump to induce a sample flow through the SPING. The sample is fed to the SPING by the Isokinetic Sampling System at a flow rate of up to approximately 2 cfm. The purpose of this system is to regulate the sample flow to accurately duplicate stack gas velocity and pressure to the vent stack SPING monitor. This allows a valid indication of the particulate content of the vent stack effluent.

4.6.2.1.1.3 Fuel Building Exhaust Air Monitor

The Fuel Building exhaust air monitor continuously monitors Fuel Building ventilation exhaust air for radioactive particulate and noble gas. Local and remote annunciation is provided.

This monitor has been installed as part of the Spent Fuel Nuclear Island (SFNI) design. It is not part of the existing process radiation monitoring system discussed in section 4.6.2.1.

4.6.2.1.2 Liquid Radiation Monitors

The liquid radiation monitors are a set of self-contained monitors used to measure radioactivity levels in liquid process and effluent streams. Table 4-3 provides a list of these monitors and identifies their tag numbers and sensitivities.

Detector outputs are transmitted to the Radiation Monitoring System cabinets in the Control Room. The radioactivity levels are indicated by the module meters and RMDS displays and recorded on paper. High radioactivity-alarm indications are displayed on the RMDS in addition to the Radiation Monitoring System cabinets.

4.6.2.1.2.1 Waste Disposal System Liquid Effluent Monitor

This channel continuously monitors all Liquid Waste System releases from the lake discharge tanks. A scintillation detector in a shielded assembly monitors all effluent discharges. Automatic valve closure action is initiated by the waste disposal system liquid effluent monitor to prevent further release after a high radioactivity condition is indicated or alarmed. The valve is located over 250 feet downstream of the monitor to allow closure prior to any radioactive release to the lake.

The accuracy of these monitors will be maintained to provide a highly reliable backup to the multiple sample analyses prior to discharge. A single monitor is provided on each discharge line and is considered adequate since the tank sample analyses are the primary method for determination of allowable discharge volume and flow. The release of liquid waste is performed under administrative control and these channels provide continuous monitoring during the release.

4.6.2.1.2.2 Fire Sump Discharge Liquid Monitor

The fire sump discharge liquid monitor is installed on the discharge of the fire sump pumps. A liquid proportional composite sampler is also installed on this discharge line. Upon actuation of the high radiation alarm from the fire sump discharge liquid monitor, the permanently installed fire sump pumps are automatically tripped to terminate release of radioactivity to the lake.

4.6.2.2 Calibration and Testing

Each channel employs an isotopic check source for channel testing. For many of these channels, the check source test is initiated at the Radiation Monitoring System cabinets or RMDS console. Check source testing of selected monitors requires local operation. Westinghouse supplied monitors can be tested online, without actuating interlocks, by increasing the interlock setpoint above the check source activity level.

All radiation monitors are calibrated by exposing the detectors to an isotope(s) of known activity. By changing the distance or placing filters between detector and the standard isotope, the field intensity is varied thereby allowing for a multi-point calibration. Channels employing count rate meters may be electronically calibrated via a pulse generator input.

The waste disposal system liquid effluent monitors are calibrated by the use of two (2) isotopic standards of different intermediate activity levels. The standards are monitored during calibration in a configuration similar to that of the monitored sample during normal operation. This method allows for an accurate isotopic calibration without contamination of the system.

The method of calibration of laboratory radiation counting instrumentation is in accordance with the vendor's manual. Complete documentation of calibration checks is maintained.

4.6.2.3 Effluent Monitoring and Sampling

The methods used in quantifying routine effluent releases to the environment consist of continuous Radiation Monitoring Systems and/or laboratory analyses. Laboratory analyses are conducted on either grab samples or composite samples.

All liquid and gaseous effluents are recorded/saved in some form of data acquisition/storage system thereby providing a complete history of abnormal occurrences for evaluation; high radiation levels alarm in the Control Room.

The high radiation alarm setpoints are based upon a value of activity which is sufficiently low to be in conformance with the concentration limit requirements.

Laboratory instrumentation used for radiation analysis of effluent grab samples are as described in the Offsite Dose Calculation Manual (ODCM). The calibration of counting equipment will be maintained by the use of sources certified against the National Institute of Standards and Technology (NIST) certificates.

Effluent monitors will be calibrated at frequencies established in the ODCM. The multi-channel gamma analyzer will be performance checked daily when in use. Sources are used to verify against known energy lines and activity. Geometry factors will be checked yearly. The liquid scintillation counter will be checked weekly.

Complete documentation of all calibration checks will be maintained.

Effluent discharge line waste monitors will be checked against laboratory analyzed or established known portable sources.

4.6.2.4 Design Features Important to the Defueled Condition

The Process Radiation Monitoring System Components, as described in section 4.6.2.1, and as shown in Table 4-3, are considered Important to the Defueled Condition.

4.6.3 Area Radiation Monitoring Instrumentation

4.6.3.1 System Description

The Area Radiation Monitoring System consists of channels which indicate radiation levels in the fuel building.

Table 4-2 identifies the radiation monitors that are important to the defueled condition, including their location and a summary of the important features of each monitor. The detector output is amplified and the log count-rate is determined by the integral amplifier at the detector. The radiation level is typically shown at the detector and is transmitted to the radiation monitoring system cabinets in the Control Room where it is indicated on a meter and the Radiation Monitor Display System (RMDS) and recorded. Most area radiation alarms are displayed locally and on RMDS in the Control Room.

The Fuel Building overhead crane radiation monitor utilizes a gamma scintillation type detector with an integral amplifier at the detector. Since this type unit is a current integrating device rather than a pulse system, it is not affected by stray electro-static or electro-magnetic fields. In addition, this detector will not saturate in high radiation fields. When the level exceeds the range of the instrument, it merely reads full scale until such time as the level recedes to a point within the instrument's range. This radiation monitor, which is mounted in the cab of the crane, is interlocked with the crane hoists such that a high radiation level will stop upward motion of the main and auxiliary hoists.

4.6.3.2 Design Features Important to the Defueled Condition

The Area Radiation Monitoring System Components, as described above, are considered Important to the Defueled Condition.

4.7 Sealed Sources

Departmental procedures detail methods of leak testing sealed sources and receipt, handling and storage of radioactive sources. Approved calibration procedures outline specific techniques for the safe handling of calibration sources.

Accountability of sources is maintained in inventory records that are routinely updated. Source accessibility control is achieved through storage areas that are maintained locked to unauthorized personnel. While in use, sources are kept under the control of an authorized individual.

Radioactive sealed sources shall be leak tested for contamination. Any licensed sealed source is exempt from such leak tests if the source contains 100 microcuries or less of beta and/or gamma emitting material or 5 microcuries or less alpha emitting material.

Test for leakage and/or contamination shall be performed by the licensee or by other persons specifically authorized by the NRC or an Agreement State as follows:

1. Each sealed source (excluding startup sources and fission detectors previously subjected to core flux) containing radioactive materials with a half life greater than 30 days (excluding Hydrogen 3), and in any form other than gas shall be tested for leakage and/or contamination at intervals not to exceed 6 months.

2. The periodic leak test does not apply to sealed sources and fission detectors that are stored and not being used. The sources and fission detectors exempted by this test shall be tested for leakage prior to any use or transfer to another licensee unless they have been leak tested within the previous six months. Sealed sources and Fission detectors transferred without a certificate indicating the last test date shall be tested prior to being placed in use. Sealed sources contained in shielded devices such as rad monitors are considered to be stored unless they are removed from the shielded mechanism.

3. The leakage test shall be capable of detecting the presence of .005 microcurie of radioactive material on the test sample. If the test reveals the presence of 0.005 microcurie or more of removable contamination. It shall be immediately withdrawn from use, decontaminated, and repaired or disposed of in accordance with Commission regulations.

   A report shall be prepared and submitted to the Commission on an annual bases if sealed source or fission detector leakage tests reveal the presence of greater than or equal to 0.005 microcurie of removable contamination, if the contamination could have resulted from source leakage.

TABLE 4-2
AREA RADIATION MONITORS

Location	Monitor	Type	Range	Type of Readout	
				Control Room	Local
Fuel Handling Building, Decontamination Area	0RE-0005	Geiger-Mueller	0.1 mR/hr – 10 R/hr	Log Meter / Recorder	Log Meter
Fuel Handling Building, Pool Area	0RT-AR03	Geiger Mueller	0.1 mR/hr – 1 R/hr	Log Meter / Recorder	Log Meter
Fuel Building Overhead Crane	0RT-AR13	Gamma Scintillation	0.1 mR/hr – 1 R/hr	None	Log Meter

(1) 0RE-0005 and 0RT-AR03 are credited with satisfying the radiation monitor requirements as defined in 10 CFR 50.68(b)(6).

TABLE 4-3
PROCESS RADIATION MONITORS

SERVICE	MONITOR NO.	INSTRUMENT CHANNEL	DETECTOR TYPE	SENSITIVITY	ISOTOPE (1)
Containment Air	1RIA-PR40 2RIA-PR40	Particulate	Beta Scintillation	1.09 E 5 cpm/μCi	Sr-90/Y-90
Auxiliary Building Vent Stack	1RIA-PR49 2RIA-PR49	Particulate	Beta Scintillation	1.09 E 5 cpm/μCi	Sr-90/Y-90
		Low Range Noble Gas	Beta Scintillation	5.0 E-7 to 1.0 E-2 μCi/cc	Kr-85
		Mid Range Noble Gas	G-M	1.0 E-2 to 1.0 E 4 μCi/cc	Kr-85
		High Range Noble Gas	G-M	1.0 to 5.0 E 5 μCi/cc	Kr-85
Fire Sump Discharge	0RT-PR25		Scintillation	9.0 E-7 to 8.0 E-2 μCi/ml	Cs-137
Waste Disposal System Lake Discharge Effluent	0RT-PR04 0RT-PR05		Scintillation	1.0 E-7 to 5.0 E-3 μCi/ml	Cs-137
Fuel Building Exhaust	0RT-PR30	Particulate Noble Gas	Sealed Gas Proportional	1.28 E5 cpm/μCi 3.5 E-3 to 2E-3 μCi/cc	Tc-99 Kr-85

(1) Sensitivity Ranges are based on these isotope

5.1.1 Loss of Spent Fuel Cooling

5.1.1.1 Event Description

This analysis assesses the time available to initiate compensatory measures in the event forced cooling to the spent fuel pool is lost, as well as the resultant radiological impact. The inability to remove the heat generated from the stored spent fuel by means of forced cooling will result in a temperature increase in the spent fuel pool water to the point that bulk boiling of the coolant volume occurs. Although boiling continues to provide a means for heat removal, if left unabated it would result in boiloff of the pool volume and the uncovering of stored irradiated fuel assemblies. No specific initiating mechanism is identified for this event. This analysis simply assumes the ability to cool the volume of water in the spent fuel pool has been lost.

5.1.1.2 Method of Analysis

Decay heat calculations were performed using the methods described in Reference 5 to determine the heat load of the spent fuel pool. The results of these calculations are presented in Figure 5-1. The spent fuel pool heat load is used to calculate the time available before the volume of water in the pool reaches saturation; the time available before stored spent fuel assemblies are uncovered due to boiloff of the pool water; and the required rate of makeup water necessary to match pool boiloff.

Heat transfer from the pool at elevated temperatures occurs by conduction through the pool walls and surface, convection across the surface of the pool, and by boiloff or evaporation of water from the pool surface. However, for additional conservatism, the calculation to determine the time to reach saturation assumes that all energy released by decay goes into sensible heating of the water in the pool. Saturation conditions are assumed to be for water at standard pressure with no consideration given for hydrostatic pressure changes due to depth. The pool walls are assumed to be adiabatic and the metal in the pool does not store any energy. Energy losses through evaporation are also neglected. Other principle assumptions used in the determination of the time to reach saturation are the net mass of the spent fuel pool (4287266.6 lbm, or 520351.7 gal.) and an initial pool water temperature of 125 degrees F. The initial pool water temperature is based on the pool high temperature alarm setpoint. The time to saturation for various initial spent fuel pool water levels is provided in Figure 5-2.

As boiling of the spent fuel pool begins, the available water inventory to cool the spent fuel assemblies decreases due to vaporization. Figure 5-3 contains a profile of the level decrease in the spent fuel pool as a function of boiling time. As the level decreases, the radiological hazards in the Fuel Handling building increase due to the gamma radiation shine from the spent fuel assemblies. Table 5-5 contains the gamma radiation dose rates at the edge of the spent fuel pool as a function of the water level above the stored assemblies. To maintain an adequate inventory and thus assure cooling of the spent fuel assemblies, the water in the spent fuel pool must be replenished. Figure 5-4 shows the required makeup flow rate necessary to match the boiloff rate in the spent fuel pool as a function of time. The required makeup flow rate assumes that the water being added to the pool is at saturation temperature and therefore has no cooling effects on the pool.

The time to increase the spent fuel pool temperature to the point of bulk boiling, in addition to the time it takes to boiloff the water n the spent fuel pool to a level approximately three and one-half feet above the top of the fuel assemblies, represents the total time available to initiate compensatory cooling measures. Compensatory cooling measures involve the establishment of a source of makeup water to the spent fuel pool at a flow rate equal to or greater than the pool boiloff rate. Makeup water may be provided from an off-site water supply, onsite storage tanks using installed piping systems, or in the case of a total loss of electrical supply to the station, using alternative external supplies and temporary piping or hoses.

5.1.1.3 Results

With a spent fuel heat load that is assumed to exist in July 1998 (Figure 5-1), it can be shown from Figure 5-2 that, with loss of forced spent fuel pool cooling at an initial pool temperature of 125 degrees F and a minimum pool level at elevation 614' 4", approximately 39 hours are available before saturation of the pool water occurs. In addition, the time it takes to boiloff the coolant volume from an initial pool elevation of 614' 4" to the 594' elevation (maximum fuel elevation discussed in section 3.9.2.2) is approximately 250 hours (figure 5-3). Thus, approximately 289 hours (12 days) are available to institute an alternative method of pool cooling from the time normal cooling is lost until the pool level decreases to a level approximately 3.9 feet above the stored fuel assemblies. The resultant radiological dose at the edge of the spent fuel pool at elevation 594' is 3.61 R/hr (Table 5-5). The required makeup flow rate to match the boiloff of the pool water is approximately 20.5 gpm (Figure 5-4).

Based on the above, it can be reasonably concluded that a loss of forced spent fuel pool cooling does not constitute an excessive risk for Zion Station. Due to the extremely slow rate of spent fuel pool water boiloff, adequate time is available to initiate corrective measures for restoration of malfunctioning components, or to institute an alternative method of cooling using onsite or offsite water supplies without significant radiological consequences for plant workers in the fuel handling building.

5.1.2 Loss of Spent Fuel Pool Inventory

5.1.2.1 Event Description

This analysis assesses the time available to initiate compensatory measures in the event of a loss of spent fuel pool inventory, as well as the radiological impact. The spent fuel pool is normally filled with borated water to approximately 615' elevation. Because the spent fuel pool is used for semi-permanent storage of irradiated fuel assemblies, it is designed without piping connections that could be used to drain it. However, two aspects of the pool design would allow the inventory to be significantly reduced in the event of a failure. These are,

1. a seal failure of a fuel transfer canal removable weir gate, and

2. a rupture of the spent fuel pool cooling water pump return line.

In the permanently defueled condition, the transfer tube gate valves are closed and their flanges installed. The Spent Fuel Pool removable weir gate, the bottom of which is approximately 2'-4" above the top of the stored fuel, is in place and its seal inflated (with instrument air or nitrogen bottle back-up). If the gate and/or its seal should have a catastrophic failure, and if the transfer canal is drained, the spent fuel pool would lose inventory to fill and equalize levels with the empty transfer canal. Assuming the water level in the spent fuel pool starts at its lowest normal level (El 614'4"), the level would remain above the 607' elevation. The fuel assemblies in the pool would remain covered by more than 17' of water, although a loss of forced cooling would result as the water level will be below the elevation that the spent fuel pumps take their suction (611'8").

The more limiting of the spent fuel pool inventory events is the rupture of the spent fuel pool cooling water pump return line. The spent fuel pumps suction is taken from strainers at elevation 611'8" and returned to the pool at elevation 598'; approximately eight feet above the top of the stored fuel assemblies. Rupture of any of this piping cannot cause the pool to be gravity drained to expose irradiated fuel assemblies. It does however, result in a condition with reduced pool inventory beyond that caused by a seal failure in the fuel transfer removable weir gate (assuming siphoning occurs at the return line and no credit is taken for the anti-siphon device), as well as a loss of forced pool cooling. Therefore, the remainder of this evaluation discusses the bounding rupture of the spent fuel pool cooling water pump return line.

5.1.2.2 Method of Analysis

This evaluation assume that, upon a rupture in the spent fuel pool cooling water return line, the water in the spent fuel pool immediately drains to the 598' elevation. Although some period of time would be available for the actual drain down to occur, this assumption provides additional conservatism with respect to the significance and resultant consequences of the event. This evaluation is similar to the evaluations performed for a Loss of Spent Fuel Pool Cooling in Section 5.1.1 in that spent fuel pool heat load is used to calculate the time available before the volume of water in the pool reaches saturation, the time available before stored spent fuel assemblies are uncovered due to boiloff of the pool water, and the required rate of makeup water necessary to match pool boiloff.

Assumptions related to energy releases from the stored fuel assemblies, energy losses from the pool water, mass of the spent fuel pool, and initial temperature of the pool are also consistent with Section 5.1.1.

The time to increase the spent fuel pool temperature to the point of bulk boiling, in addition to the time it takes to boiloff the water in the spent fuel pool to a level approximately three and one-half feet above the top of the fuel assemblies, represents the total time available to initiate compensatory cooling measures. Compensatory cooling measures involve the establishment of a source of makeup water to the spent fuel pool at a flow rate equal to or greater than the pool boiloff rate. Makeup water may be provided from onsite storage tanks using installed piping systems, or in the case of a total loss of electrical supply to the station, using alternative external supplies and temporary piping or hoses. Evaporative cooling of the spent fuel pool with subsequent makeup continues until the ruptured piping is repaired or isolated while maintaining the pool level above the tops of the seated fuel assemblies and below the 598' elevation. Once the necessary repairs or isolations are made, the pool level can be raised to its normal level. If available, forced cooling of the spent fuel pool can resume.

5.1.2.3 Results

With a spent fuel heat load that is assumed to exist in July 1998 (Figure 5-1), it can be shown from Figure 5-2 that, with a minimum pool level at elevation 598' with a concurrent loss of forced spent fuel pool cooling at an initial pool temperature of 125 degrees F, approximately 21 hours are available before saturation of the pool water occurs. In addition, the time its takes to boiloff the coolant volume from an initial pool elevation of 598' to the 594' elevation (maximum fuel elevation discussed in section 3.9.2.2) is approximately 56 hours (Figure 5-3). Thus, approximately 77 hours (3.2 days) are available to institute an alternative method of pool cooling from the time a rupture occurs in the spent fuel pool cooling return line until the pool level decreases to a level approximately 3.9 feet above the stored fuel assemblies. The resultant radiological dose at the edge of the spent fuel pool at elevation 594' is 3.61 R/hr (Table 5-5). The required makeup flow rate to match the boiloff of the pool water is approximately 20.5 gpm (Figure 5-4).

Based on the above, it can be reasonably concluded that a rupture in the spent fuel pool cooling return line does not constitute an excessive risk for Zion Station. Due to the extremely slow rate of spent fuel pool water boiloff, adequate time is available to institute an alternative method of cooling using onsite or offsite water supplies without significant radiological consequences for plant workers in the fuel handling building.

5.4 References, Section 5.0

1. Zion Station Calculation No. 22S-0-110X-0057, Rev. 2, "Fuel Handling Accident Offsite Dose Calculation with Extended Radioactive Decay and no AB Filtration,

2. Zion Station Calculation No. 22S-0-110X-0059, Rev. 2, "Fuel Handling Accident Control Room Dose Calculation with Extended Radioactive Decay,

3. NRC Regulatory Guide 1.25, "Assumptions Used for Evaluating the Potential Radiological Consequences of a Fuel Handling Accident in the Fuel Handling and Storage Facility for Boiling and Pressurized Water Reactors", March 23, 1972,

4. NRC Regulatory Guide 1.109 Rev. 1, "Calculation of Annual Doses to Man from Routine Releases of Reactor Effluents for the Purpose of Evaluating Compliance with 10CFR50 Appendix I", October, 1977,

5. Nuclear Regulatory Commission Branch Technical Position 9-2, "Residual Decay Energy for Light-Water Reactors for Long-Term Cooling", Rev. 2, July, 1981.

6. Zion Station Calculation No. 22S-0-107X-0002, "Spent Fuel Pool Dose Rates at Various Water Levels",

7. Zion Station Calculation No. 22N-0-110M-0058, "Zion Decommissioning Spent Fuel Pool Heat Load and Time to Saturation Calculation",

8. Zion Station Calculation No. 22S-0-110S-0060, "Evaluation of the Zion Spent Fuel Pool for an Accident Temperature of 212°F"

9. Zion Station Calculation No. 22N-0-119M-0001, Rev. 1, "Dose Effects of Radwaste Handling Accident Involving a HIC."

10. Federal Guidance Report No. 11, "Limiting Values of Radionuclide Intake and Air Concentration and Dose Conversion Factors for Inhalation, Submersion and Ingestion." Washington, DC; U.S. Environmental Protection Agency, 1988.

TABLE 5-3

ASSUMPTIONS USED IN CALCULATING THE DOSE CONSEQUENCES FOR A FUEL HANDLING ACCIDENT

Site EAB Evaluation

Parameter	Value
Minimum Fuel Decay Time From 2/21/97	8760 hours[1]
Breathing Rate	3.47×10^{-4} (m^3/sec)
Distance to Exclusion Area Boundary	377 meters
Atmospheric diffusion Factor (X/Q)	3.7×10^{-3} sec/m^3
Decontamination Factor for SFP and Ventilation Filtration	1
Activity in Fuel Clad Released	100%
Wind Speed	1 meter/sec.
Iodine Dose Conversion Factors	From Reference 3
Inhalation Dose Conversion Factors	From Reference 10, Table 2-1

Control Room Evaluation

Parameter	Value
Minimum Fuel Decay Time From 2/21/97	17520 hours [2]
Distance from SFP to Cont. Rm. Outside air intake	27.8 meters
Atmospheric diffusion Factor (X/Q)	0.168 sec/m^3
Decontamination Factor for SFP and Ventilation Filtration	1
Activity in Fuel Clad Released	100%
Total Body/Skin Dose Conversion Factors	From Reference 4

(1) Based on one year (365 days) decay time

(2) Based on two years (730 days) decay time

TABLE 5-4

PROJECTED DOSE FOLLOWING A FUEL HANDLING ACCIDENT

	Whole Body Dose (Rem)	Thyroid Dose (Rem)	Skin Dose (Rem)
Site EAB	$8.16^{(2)} \times 10^{-1}$	3.9×10^{-9}	8.0×10^{-1} (2)
CR Outside Air Intake	2.80×10^{-1}	NA	23.65
10 CFR 100 Guidelines	25	300	NA
GDC 19 Limits	5.0	30	30
EPA PAGs	1(1)	5	50

(1) The acceptance criteria is that the sum of the whole body dose and the inhalation dose is less than 1.0 rem. For this accident, the inhalation dose due to isotopes other than iodine is insignificant.

(2) Whole body dose includes skin dose factor.

TABLE 5-5

ESTIMATED GAMMA RADIATION DOSE RATES AT THE EDGE OF THE SPENT FUEL POOL AS A FUNCTION OF POOL WATER LEVEL AFTER 1 YEAR OF RADIOACTIVE DECAY

Water Level (ft.)	Height Above Fuel (ft.)*	Dose Rate (mrem/hr.)
614	23.91	1.57E-14
612	21.91	9.36E-13
610	19.91	5.53E-11
608	17.91	3.23E-09
606	15.91	1.87E-07
604	13.91	1.06E-05
603	12.91	7.95E-05
602	11.91	5.92E-04
601	10.91	4.37E-03
600	9.91	3.21E-02
599	8.91	2.33E-01
598	7.91	1.67E+00
597	6.91	1.18E+01
596	5.91	8.21E+01
595	4.91	5.55E+02
594	3.91	3.61E+03
593	2.91	2.22E+04
592	1.91	1.23E+05

* These dose rates were conservatively determined assuming the elevation at the top of the fuel assembly to be 590' 1.1" as referenced in UFSAR section 15.7.4.3.4.2.4. The maximum height of a fuel assembly stored in the spent fuel pool, based on the spent fuel rack design, is at the 589' 11.725" elevation (reference section 3.9.2.2).

TABLE 5-7

PROJECTED DOSE FOLLOWING A
RADIOACTIVE WASTE HANDLING ACCIDENT

	Whole Body Dose (Rem)	Inhalation Dose (Rem)
Site EAB	7.9×10^{-3}	9.1×10^{-1}
10 CFR 100 Guidelines(1)	0.5	6
EPA PAGs	Note 2	Note 2

(1) For conservatism, the probability of the accident occurring is the same as a radioactive gas tank rupture. The acceptance criteria is established as 1/50 of the 10CFR100 guidelines.

(2) The acceptance criteria is that the sum of the whole body dose and the inhalation dose is less than 1.0 rem.

TABLE OF CONTENTS

SECTION	TITLE	PAGE
6.	CONDUCT OF OPERATIONS	6-1
6.1	RESPONSIBILITY AND ORGANIZATION	6-1
6.1.1	On-Site Organization	6-1
6.1.1.1	Duties and Responsibilities of the Operating Staff Personnel	6-1
6.1.1.1.1	Decommissioning Operations Manager	6-1
6.1.1.1.2	Shift Supervisor, Decommissioning	6-2
6.1.1.2	Duties and Responsibilities of the Support Staff	6-2
6.1.1.2.1	RP/Chemistry Manager, Decommissioning	6-2
6.1.1.2.2	Maintenance Manager, Decommissioning	6-2
6.1.1.2.3	Regulatory Assurance Manager	6-2
6.1.1.2.4	Engineering Manager, Decommissioning	6-2
6.1.1.2.5	Services Manager, Decommissioning	6-2
6.2	TECHNICAL SPECIFICATIONS	6-2
6.3	TRAINING	6-3
6.4	PROCEDURES	6-3
6.5	PROGRAMS	6-3
6.5.1	Emergency Plan	6-3
6.5.2	Security Plan	6-4
6.5.3	Fire Protection Program	6-4
6.5.4	Fitness for Duty	6-4
6.5.5	Offsite Dose Calculation Manual	6-4
6.5.6	Process Control Program	6-5
6.5.7	Maintenance Rule Program	6-5
6.5.8	Quality Assurance Program	6-5
6.6	REVIEW AND INVESTIGATIVE FUNCTION	6-5

6.3 TRAINING

Programs are conducted to train plant personnel. Key technical and operating personnel receive on-site classroom or guided self-study and on-the-job training. The Certified Fuel Handler training program ensures the monitoring, handling, storage, and cooling of nuclear fuel is performed in a manner consistent with ensuring the health and safety of the public. Appropriate plant personnel receive instruction in emergency plan and radiation protection procedures. Specialized training in specific areas conducted by the equipment manufacturers or other vendors is utilized as necessary. Training on a continuing basis is used to maintain a high level of proficiency in the staff.

6.4 PROCEDURES

Written procedures/instructions, e.g. Nuclear Work Requests are required for maintenance or repair activities related to the structures, systems and components which are identified as Important To the Defueled Condition (ITDC) as defined in Section 3.2.

In addition, written procedures are required for operational activities related to the structures, systems, and components which are identified as Important to the Defueled Condition as defined in Section 3.2.

Written procedures shall be established, implemented and maintained as required by the Technical Specifications.

6.5 PROGRAMS

6.5.1 Emergency Plan

The Defueled Station Emergency Plan (DSEP) is a written emergency plan that establishes the concepts, evaluation and assessment criteria, and onsite protective actions necessary to limit and mitigate the consequences of potential or actual emergencies. The DSEP provides the necessary pre-arrangements, directions, and organization to ensure radiological emergencies can be effectively and efficiently resolved in order to safeguard station personnel and property.

The DSEP identifies on-site and off-site facilities and equipment available for emergency assessment, communications, first aid and medical care, and damage control. The DSEP also includes notification requirements for classified events, including prompt and accurate notifications to Federal, State, and local governments.

Zion has developed Emergency Plan Implementing Procedures (EPIPs) which implement the DSEP appropriately. Training is conducted for all emergency response personnel to ensure their proficiency.

The DSEP is distributed on a controlled basis to all stations and emergency facilities requiring them, including appropriate Federal, State, and local agencies.

The DSEP has been submitted to and approved by the NRC. It is reviewed annually, and any changes or revisions that pertain to regulatory requirements are submitted to the NRC for approval.

6.5.2 Security Plan

A detailed Zion physical security plan, withheld from public disclosure pursuant to 2.790 of 10CFR2, has been made available to the NRC.

The Zion Station physical security plan conforms to the requirements of 10CFR73.55.

6.5.3 Fire Protection Program

The Zion Station Fire Protection Program describes how Zion Station complies with and meets the objectives of 10CFR50.48(f) and describes the fire detection and suppression systems. The Fire Protection Program includes provisions for periodic assessments to ensure that the Program is maintained and is appropriate throughout the various stages of facility decommissioning. A fire suppression water system consists of: a water source(s); pumps; and distribution piping with associated sectionalizing isolation valves. Such valves shall include yard hydrant valves, and the first valve upstream of the water flow alarm device on each sprinkler, hose standpipe or spray system riser.

6.5.4 Fitness for Duty

The ComEd Fitness for Duty (FFD) Program meets the requirements and standards of 10CFR26.

6.5.5 Offsite Dose Calculation Manual

The Zion Station Offsite Dose Calculation Manual (ODCM) is defined by Technical Specifications to contain the methodology and parameters used in the calculation of off-site doses resulting from radioactive gaseous and liquid effluents, in the calculation of gaseous and liquid effluent monitoring Alarm/Trip Setpoints and in the conduct of the Environmental Radiological Monitoring Program. The ODCM shall also contain the Radioactive Effluent Control and Radiological Environmental Monitoring Programs and descriptions of the information that should be included in the Annual Radiological Environmental Operating and Annual Radioactive Effluent Release Reports.

6.5.6 Process Control Program

The Process Control Program (PCP) contains the current formulas, sampling analyses, tests, and determinations to be made to ensure that processing and packaging of solid radioactive wastes based on demonstrated processing of actual or simulated wet solid wastes will be accomplished in such a way as to assure compliance with 10CFRParts 20, 61, and 71; state regulations; burial ground requirements; and other requirements governing the disposal of solid radioactive waste. Dry active waste (DAW) such as compacted trash and contaminated components are not included in the scope of the PCP. Written procedures are established, implemented, and maintained covering the key activities of the Process Control Program.

Changes to the PCP shall be documented and records of reviews performed shall be retained as required by Technical Specifications.

6.5.7 Maintenance Rule Program

A Maintenance Rule Program has been established, in accordance with 10CFR50.65, for monitoring the performance of structures, systems, and components associated with the storage, control, and maintenance of spent fuel in a safe condition. The Maintenance Rule Program has established performance criteria for these SSCs such that attainment of the criteria provides reasonable assurance that the SSCs are capable of fulfilling their intended functions.

6.5.8 Quality Assurance Program

The Quality Assurance Program is implemented in accordance with the Commonwealth Edison Company Quality Assurance Topical Report, CE-1-A.

6.6 REVIEW AND INVESTIGATIVE FUNCTION

The review and investigative functions are conducted in accordance with the plant Technical Specifications.

TABLE OF CONTENTS

SECTION	TITLE	PAGE

THIS PAGE INENTIONALLY LEFT BLANK

7. QUALITY AND TECHNICAL REQUIREMENTS

THIS PAGE INTENTIONALLY LEFT BLANK

THIS PAGE INTENTIONALLY LEFT BLANK