FIGURE 1
CALLAWAY NPDES FLOW DIAGRAM

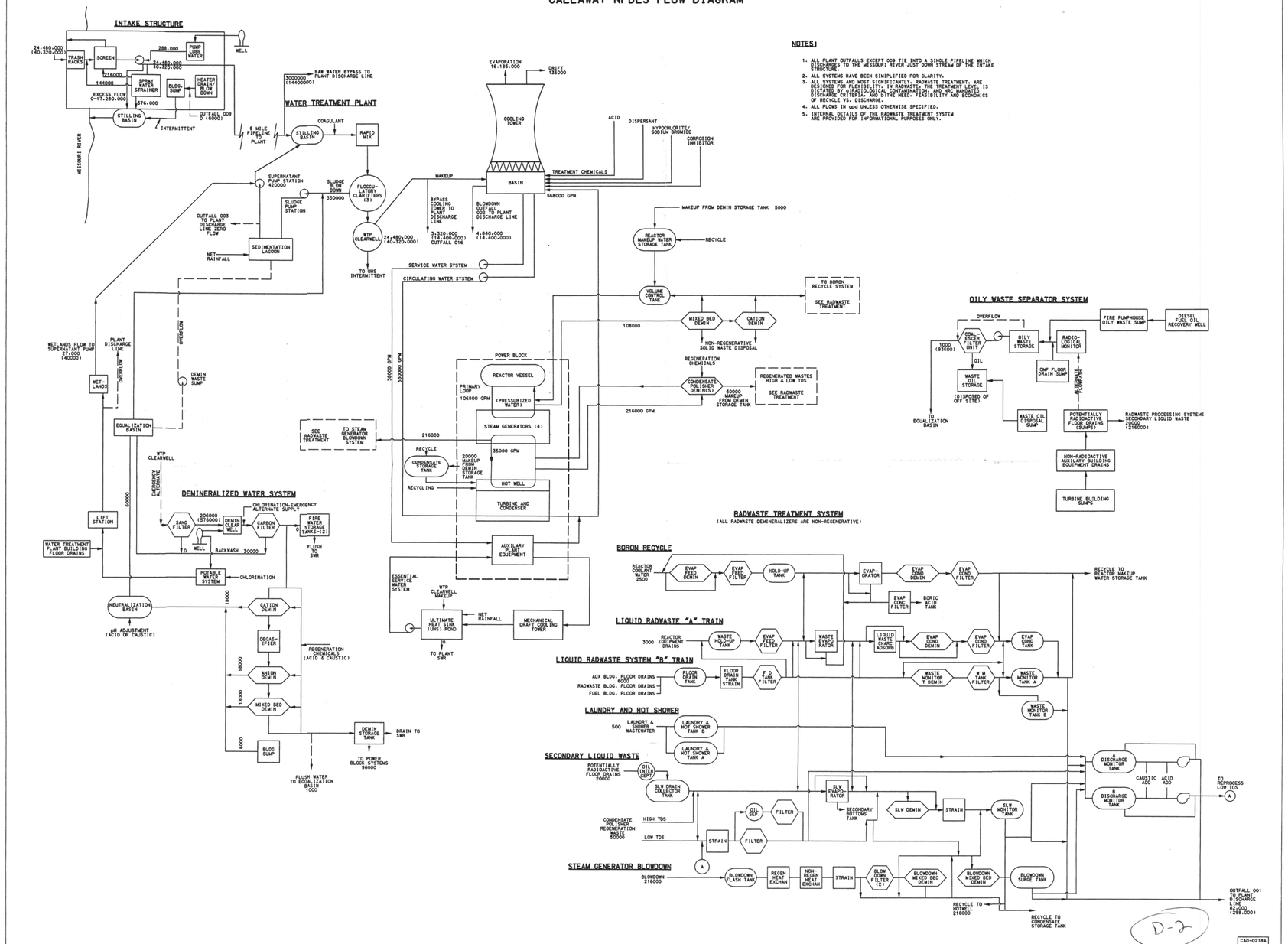

NOTES:

1. ALL PLANT OUTFALLS EXCEPT 009 TIE INTO A SINGLE PIPELINE WHICH DISCHARGES TO THE MISSOURI RIVER JUST DOWN STREAM OF THE INTAKE STRUCTURE.
2. ALL SYSTEMS HAVE BEEN SIMPLIFIED FOR CLARITY.
3. ALL SYSTEMS AND MOST SIGNIFICANTLY, RADWASTE TREATMENT, ARE DESIGNED FOR FLEXIBILITY. IN RADWASTE, THE TREATMENT LEVEL IS DICTATED BY O.RADIOLOGICAL CONTAMINATION, AND NRC MANDATED DISCHARGE CRITERIA, AND DITHE NEED, FEASIBILITY AND ECONOMICS OF RECYCLE VS. DISCHARGE.
4. ALL FLOWS IN gpd UNLESS OTHERWISE SPECIFIED.
5. INTERNAL DETAILS OF THE RADWASTE TREATMENT SYSTEM ARE PROVIDED FOR INFORMATIONAL PURPOSES ONLY.

D-2