UNITED STATES
NUCLEAR REGULATORY COMMISSION
WASHINGTON, D.C. 20555-0001

October 6, 2000

Mr. J. A. Scalice
Chief Nuclear Officer
and Executive Vice President
Tennessee Valley Authority
6A Lookout Place
1101 Market Street
Chattanooga, Tennessee 37402-2801

SUBJECT: BROWNS FERRY NUCLEAR PLANT, UNIT 2 - REQUEST LICENSEE COMMENTS ON PRIORITIZATION OF GENERIC SAFETY ISSUE 156.6.1: "PIPE BREAK EFFECTS ON SYSTEMS AND COMPONENTS INSIDE CONTAINMENT"

Dear Mr. Scalice:

The Office of Nuclear Regulatory Research (RES) is currently assessing whether the nuclear power plant units, referred to as the Systematic Evaluation Program Phase III (SEP-III) plants, will need to be individually reevaluated for the resolution of Generic Safety Issue (GSI)-156.6.1, "Pipe Break Effects on Systems and Components Inside Containment." GSI-156.6.1 deals with whether the effects of high energy pipe breaks inside containment have been adequately addressed in the respective designs of these units. The 41 SEP-III plants for which this GSI is applicable are listed in Enclosure 1. Browns Ferry Units 1 and 2, are among the 41 SEP-III plants and are thus within the scope of GSI-156.6.1.

As background, in November 1975, the U.S. Nuclear Regulatory Commission (NRC) staff issued Standard Review Plan (SRP), Section 3.6.1, "Plant Design for Protection Against Postulated Piping Failures in Fluid Systems Outside Containment" and Section 3.6.2, "Determination of Rupture Locations and Dynamic Effects Associated with the Postulated Rupture of Piping." Prior to issuance of these SRP sections, the Atomic Energy Commission/NRC staff positions for these technical areas were in a state of evolution. Therefore, there was a potential lack of uniformity in the pipe break reviews of the SEP-III plants that may have resulted in some of them not being adequately analyzed and/or designed for postulated pipe breaks inside containment. GSI-156.6.1 was initiated as a result of this concern.

In 1999, RES completed an "enhanced" prioritization of GSI-156.6.1 in accordance with NRC's internal procedures. The prioritization of this GSI is contained in two documents. The first document, entitled: "Prioritization of Generic Issue 156.6.1, 'Pipe Break Effects on Systems and Components'," is provided in Enclosure 2. It is a priority determination analysis by the RES staff. The second document, provided in Enclosure 3, is Draft NUREG/CR-6395, entitled: "Enhanced Prioritization of Generic Safety Issue 156.6.1: 'Pipe Break Effects on Systems and Components Inside Containment'." The latter document was prepared by the Idaho National

Template NRR-106

No Dist

Engineering and Environmental Laboratory (INEEL) and provides extensive and detailed technical information and analysis information in support of the staff's priority determination analysis. The prioritization resulted in the GSI being given a "high" priority for resolution. In conducting the prioritization study several boiling water reactor (BWR) and pressurized water reactor (PWR) SEP III facilities were visited by INEEL. Browns Ferry was one of the BWR facilities visited by INEEL.

The BWR and PWR SEP-III plant pipe break effect insights used in the enhanced prioritization will be included in the staff's follow-on GSI technical evaluation, including the development of the staff's recommended resolution actions. The objective of this request is to collect additional information on a voluntary basis which identifies sources of elevated conservatism in the scenarios used in the prioritization probabilistic risk assessments. Comments could be based on information in the literature or knowledge of your individual plant design. For example, information on the plant-specific equipment arrangements of Browns Ferry might show where and how the prioritization analysis for the BWR SEP-III plants is overly conservative or incorrect. Information might also be provided that shows that assuming a break, the model for the pipe break effects, or the model of the plant (or operator) response to the postulated break is incorrect or overly conservative for Browns Ferry. We specifically invite your comments on whether pipe break locations and pipe break effects assumed in the staff's prioritization analysis for the BWR SEP-III plants are applicable to Browns Ferry Units 1 and 2 from a deterministic (i.e., engineering analysis) standpoint. For pipe break locations and effects which are considered not applicable, you may describe the technical basis for your conclusion. Comments received within 45 days of receipt of this letter will be considered. (Note: Pipe break scenarios for BWRs designated as Case 4 and Case 5 in Enclosure 2 will not be included in the technical evaluation of GSI 156.6.1 and, therefore, comments are not requested for these cases. These scenarios are being evaluated separately in connection with the resolution of GSI-80, "Pipe Break Effects on Control Rod Drive Hydraulic Lines in the Drywell of BWR Mark I and Mark II Containments.")

If you or your staff have any questions on this request or the enclosures, please feel free to contact either William Long, E-mail: WOL@NRC.GOV, 301-415-3026 of the Office of Nuclear Reactor Regulation or Mr. Stuart D. Rubin, E-mail: SDR1@NRC.GOV, 301-415-7480 of the Office of Nuclear Regulatory Research. Comments should also be forwarded to these individuals.

Sincerely,

William O. Long

William O. Long, Senior Project Manager, Section 2
Project Directorate II
Division of Licensing Project Management
Office of Nuclear Reactor Regulation

Docket No. 50-260

Enclosures: As Stated

cc w/encls: See next page

Engineering and Environmental Laboratory (INEEL) and provides extensive and detailed technical information and analysis information in support of the staff's priority determination analysis. The prioritization resulted in the GSI being given a "high" priority for resolution. In conducting the prioritization study several boiling water reactor (BWR) and pressurized water reactor (PWR) SEP III facilities were visited by INEEL. Browns Ferry was one of the BWR facilities visited by INEEL.

The BWR and PWR SEP-III plant pipe break effect insights used in the enhanced prioritization will be included in the staff's follow-on GSI technical evaluation, including the development of the staff's recommended resolution actions. The objective of this request is to collect additional information on a voluntary basis which identifies sources of elevated conservatism in the scenarios used in the prioritization probabilistic risk assessments. Comments could be based on information in the literature or knowledge of your individual plant design. For example, information on the plant-specific equipment arrangements of Browns Ferry might show where and how the prioritization analysis for the BWR SEP-III plants is overly conservative or incorrect. Information might also be provided that shows that assuming a break, the model for the pipe break effects, or the model of the plant (or operator) response to the postulated break is incorrect or overly conservative for Browns Ferry. We specifically invite your comments on whether pipe break locations and pipe break effects assumed in the staff's prioritization analysis for the BWR SEP-III plants are applicable to Browns Ferry Units 1 and 2 from a deterministic (i.e., engineering analysis) standpoint. For pipe break locations and effects which are considered not applicable, you may describe the technical basis for your conclusion. Comments received within 45 days of receipt of this letter will be considered. (Note: Pipe break scenarios for BWRs designated as Case 4 and Case 5 in Enclosure 2 will not be included in the technical evaluation of GSI 156.6.1 and, therefore, comments are not requested for these cases. These scenarios are being evaluated separately in connection with the resolution of GSI-80, "Pipe Break Effects on Control Rod Drive Hydraulic Lines in the Drywell of BWR Mark I and Mark II Containments.")

If you or your staff have any questions on this request or the enclosures, please feel free to contact either William Long, E-mail: WOL@NRC.GOV, 301-415-3026 of the Office of Nuclear Reactor Regulation or Mr. Stuart D. Rubin, E-mail: SDR1@NRC.GOV, 301-415-7480 of the Office of Nuclear Regulatory Research. Comments should also be forwarded to these individuals.

Sincerely,
/RA/
William O. Long, Senior Project Manager, Section 2
Project Directorate II
Division of Licensing Project Management
Office of Nuclear Reactor Regulation

Docket No. 50-260

Enclosures: As Stated

cc w/encls: See next page

DISTRIBUTION:	PUBLIC	PDII-2 Reading	RidsNrrDlpmLpdii2
BClayton (Hardcopy)	RidsNrrPMWLong	SRubin (e-mail)	FEltawila (e-mail)
OGC	CRS	PFredrickson	

DOCUMENT NAME: GSI_156revcor.wpd

OFFICE	PDII-2:PM	PDII-2:LA	PDII-2:SC
NAME	WLong	BClayton	RCorreia
DATE	10/23/00	10/23/00	10/23/00

OFFICIAL RECORD COPY

Systematic Evaluation Program Phase III Plants

Nine Mile Point 1	Vermont Yankee	Cooper
Robinson 2	Maine Yankee	Arkansas 1
Point Beach 1 & 2	Kewaunee	Calvert Cliffs 1
Monticello	Fort Calhoun	D. C. Cook 1
Dresden 3	Zion 1* & 2*	Hatch 1
Pilgrim	Browns Ferry 1 & 2	FitzPatrick
Quad Cities 1 & 2	Indian Point 2 & 3	Three Mile Island 1
Surry 1 & 2	Peach Bottom 2 & 3	Brunswick 2
Turkey Point 3 & 4	Prairie Island 1 &2	Trojan*
Oconee 1, 2, & 3	Duane Arnold	Millstone 2

* permanently shutdown

Prioritization of Generic Issue 156.6.1,
"Pipe Break Effects on Systems and Components"

DESCRIPTION

Historical Background

In 1967 the AEC published draft General Design Criteria (GDCs) for comment and interim use. Until 1972 the staff's implementation of the GDCs required consideration of pipe break effects inside containment. However, due to the lack of documented review criteria, NRC/AEC staff positions were continually evolving. Review uniformity was finally developed in the early 1970s; initiated by a note from L. Rogers to R. Fraley, "Safety Guides" dated November 9, 1972, in which a draft safety guide entitled "Protection Against Pipe Whip Inside Containment" was proposed. This draft guide contained some of the first documented deterministic criteria that the staff had been using (to varying degrees) for several years for selecting the locations and orientations of postulated pipe breaks inside containment, and for identifying the measures that should be taken to protect safety-related systems and equipment from the dynamic effects of such breaks. Prior to use of these deterministic criteria, the staff used non-deterministic guidelines on a plant-specific basis. This draft safety guide was subsequently revised and issued in May 1973 as Regulatory Guide 1.46 with the same title. The regulatory guide was implemented only on a forward-fit basis.

Regarding pipe break effects outside containment: in December 1972 and July 1973, the AEC issued two generic letters to all licensees and CP or OL applicants (References 1 and 2) ; known as the "Giambusso" and "O'Leary" letters, respectively. These letters extended the pipe break concerns to outside containment, and provided deterministic criteria for break postulation and evaluation of the dynamic effects of postulated breaks. The letters requested that all recipients submit a report to the staff which summarized each plant-specific analysis of this issue. All operating reactor licensees and license applicants submitted the requested analyses in separate correspondence or updated the safety analysis report for the proposed plant to include the analysis. The staff reviewed all of these submitted analyses and prepared safety evaluations for all plants. In November 1975, the staff published SRP Sections 3.6.1 and 3.6.2 that slightly revised the two generic letters discussed above. Thus, after 1975 the specific structural and environmental effects of pipe whip, jet impingement, flooding, etc. on systems and components relied on for safe reactor shutdown were considered.

As stated above, the AEC/NRC has provided requirements to the industry regarding pipe breaks outside of containment through the issuance of the "Giambusso" and "O'Leary" generic letters. Since these requirements are applicable to all the affected plants, pipe breaks outside of containment are considered a compliance issue and have been dropped from this prioritization. By EDO direction, compliance matters are to be dealt with promptly, and not await the generic issue resolution process. Therefore the issue of pipe breaks outside of containment for the 41 affected plants was brought to the attention of NRR by separate correspondence (Reference 3). The remainder of this prioritization discusses only pipe breaks inside containment.

As a part of its plant-specific reviews between 1975 and 1981, the staff used the guidelines in Regulatory Guide 1.46 for postulated pipe breaks inside containment and SRPs 3.6.1 and 3.6.2 for outside containment. In July 1981, SRPs 3.6.1 and 3.6.2 were revised to be applicable to both outside and inside containment; thus, eliminating the need for further use of Regulatory Guide 1.46.

Between the period 1983-1987, the NRC Systematic Evaluation Program (SEP) revisited the general issue of pipe breaks inside and outside containment. The objective of the SEP was to determine to what extent the earliest 10 plants (i.e., SEP-II) met the licensing criteria in existence at that time. This objective was later interpreted to ensure that the SEP also provided safety assessments adequate for conversion of provisional operating licenses (POLs) to full-term operating licenses (FTOLs). As a result of these reviews plants were required to perform engineering evaluations, technical specification or procedural changes, and physical modifications both inside and outside containment. Regarding inside containment modifications: of the two SEP-II plants evaluated for this prioritization (one BWR and one PWR), the BWR was required to modify four piping containment penetrations and the PWR was required to modify steam generator blowdown piping supports. This indicates there was a wide spectrum of implementation associated with the original reviews of these early plants for pipe breaks inside and outside containment.

As with the above-described evolution of uniform pipe break criteria, electrical systems design criteria were also in a state of development. Prior to 1974, electrical system designs were generally reviewed in accordance with the guidelines provided in IEEE-279; however, significant variations in interpretations of that document resulted in substantial design differences in plants. Specifically, true physical separation of wiring to redundant components was not necessarily accomplished. In 1974, Regulatory Guide 1.75 was published, clarifying the requirements.

A draft prioritization of this issue resulted in a MEDIUM determination and that the scope could be limited to pipe breaks inside containment since the NRC had already provided requirements regarding outside containment pipe breaks to the industry through the issuance of the previously mentioned "Giambusso" and "O'Leary" generic letters.

However, the uncertainty in the analysis was much wider than desired for a definitive priority ranking. Thus, the issue appeared to warrant additional analysis to enhance the prioritization. In July 1994 a contract was begun with the Idaho National Engineering Laboratory to:

1. Review of pipe failure rate data, pipe break methodologies, and related publications to determine recommended pipe failure rates (initiating events) applicable to the affected SEP-III plants.

2. Review of Updated Final Safety Analysis Reports and related Safety Evaluation Reports for SEP-II, SEP-III, and for representative non-SEP plants to identify and prioritize potential safety concerns (i.e., accident sequences). Several plant visits/walkdowns were included as part of this review.

3. Estimate changes to core damage frequencies for accident sequences that are determined to be of high or medium priority.

4. Identify potential corrective actions and their estimated costs.

Based on the results of the INEL research, the enhanced prioritization is presented below.

Safety Significance

GDC 4 is the primary regulatory requirement of concern. It requires, in part, that structures, systems and components important to safety be appropriately protected against the environmental and dynamic effects that may result from equipment failures, including the effects of pipe whipping and discharging fluids. Several possible scenarios for plants that do not have adequate protection against pipe whip were identified as a result of the research performed in support of the enhanced prioritization.

Related regulatory criteria include common cause failures, protection system independence, and the single failure criterion.

Recommended Solution

Issue Generic Letters to the affected plants requesting that they perform plant-specific reviews and walkdowns, identify vulnerable pipe break locations, and inform the NRC of proposed corrective actions.

PRIORITY DETERMINATIONS

Numerous scenarios of potential concern were evaluated. The following were considered important enough to be specifically identified for future consideration. All estimated frequencies and probabilities are mean values.

BWRs

Case 1 (INEEL BWR Event 1): Failure of Main Steam or Feedwater Piping Resulting in Pipe Whip and Containment Impact/Failure, with Resultant Failure of All Safety Injection Systems

This event involves a BWR with a Mark I steel containment; 15 of the 16 affected BWRs are of this design. A DEGB of an unprotected (i.e., no pipe whip restraint or containment liner impact absorber) large reactor coolant recirculation pipe inside containment and near the containment liner might result in puncturing the liner. The resulting unisolable LOCA steam environment would be introduced into the secondary containment building, possibly disabling the ECCS equipment located there. This scenario would greatly increase the probability of core damage and potential offsite doses.

All of the affected BWRs are more than 10 years old, and most use type 304 stainless steel in the primary system piping; a material that is susceptible to IGSCC degradation. It should be noted that piping of this material does not qualify for the extremely low rupture probability (Leak-Before-Break) provision of GDC 4. From NUREG-1150, the recirculation loop DEGB frequency for this material is estimated to be 1 E-4/Reactor-Year (Rx-Yr). The fraction of BWR primary

piping inside containment that is either Main Steam (MS) or Feedwater (FW) is estimated to be 4.0 E-1. The fraction of MS or FW piping that can impact the containment metal shell is estimated to be 2.5 E-1.

The research performed indicates that there is considerable variation among the affected plants regarding the amount of pipe whip protection provided and the proximity of high energy lines to potential targets of concern, including redundant trains, (see Other Considerations). It was assumed that the probability of a MS or FW broken pipe rupturing the containment metal shell was 2.5 E-1.

The postulated event may also cause a common mode failure of the ECCS system since much of this equipment is located within the secondary containment and will be exposed to a harsh environment beyond its design basis, or that the ECCS piping will fail due to overpressurization of the containment annulus. In most of the affected plants, the ECCS is located in four different quadrants outside the suppression pool (torus). On the other hand, as stated above, redundant electrical power systems and initiating circuitry may not be physically separated in these older plants. Also, if the ECCS operates initially, the ECCS equipment rooms may not be fully protected from internal flooding as the water from the suppression pool flows out the broken pipe into the secondary containment. Based on these considerations the mean probability of loss of ECCS function was assumed to 8.0 E-1.

Based on the above assumptions, the mean value of change in CDF per reactor year is:

dCDF/Rx-Yr = 2.0 E-6

From WASH-1400, the nearest scenario to that described above is the large LOCA BWR-3 release category; involving a large LOCA and subsequent containment failure. However, in the WASH-1400 case, the containment failure results from overpressurization; not from pipe whip. Three of the four specific BWR-3 large LOCA accident sequences have an incidence frequency of 10 E-8/Rx-Yr, and the remaining one is 10 E-7/Rx-Yr; 10 E-8/Rx-Yr was chosen as the base case for this analysis.

<u>Case 2 (INEEL BWR Event 9): Failure of Recirculation Piping Resulting in Pipe Whip and Containment Impact/Failure, with Resultant Failure of All Emergency Core Cooling Systems</u>

This event is similar to Case 1 but involves the Recirculation System piping. From NUREG-1150, the recirculation loop DEGB mean frequency for this material is estimated to be 1 E-4/Rx-Yr. The fraction of BWR primary piping inside containment that is recirculation piping is estimated to be 2.0 E-1. The fraction of recirculation piping that can impact the containment metal shell is estimated to be 5.0 E-1. It was estimated that the mean probability of a recirculation system broken pipe rupturing the containment metal shell was 5.0 E-1. The mean probability of eventual failure of all ECCS by the same modes described for Case 1 is estimated to be 8.0 E-1.

Based on the above assumptions, the mean value of change in CDF per reactor year is:

dCDF/Rx-Yr = 4.0 E-6

Case 3 (INEEL BWR Event 12): Failure of RHR Piping Resulting in Pipe Whip and Containment Impact/Failure, with Resultant Failure of All Emergency Core Cooling Systems

This event is similar to Cases 1 and 2 but involves the RHR System piping. From NUREG-1150, the RHR DEGB frequency for this material is estimated to be 1 E-4/Rx-Yr. The fraction of BWR primary piping inside containment that is RHR piping is estimated to be 1.0 E-1. The fraction of RHR piping that can impact the containment metal shell is estimated to be 5.0 E-1. The mean probability of a recirculation system broken pipe rupturing the containment metal shell is 1.0 E-1. The mean probability of eventual failure of all ECCS by the same modes described for Cases 1 and 2 is estimated to be 8.0 E-1.

Based on the above assumptions, the mean value of change in CDF per reactor year is:

dCDF/Rx-Yr = 4.0 E-7

Case 4 (INEEL BWR Event 5): Failure of Recirculation Piping Resulting in Pipe Whip or Jet Impingement on Control Rod Drive Bundles, Causing Failure by Crimping of Enough Insert/Withdraw Lines to Result in Failure to Scram the Reactor

From NUREG-1150, the recirculation loop DEGB frequency for this material is estimated to be 1 E-4/Rx-Yr. The fraction of BWR primary piping inside containment that is recirculation piping is estimated to be 2.0 E-1. The fraction of recirculation piping that can impact or impinge on the CRD lines is estimated to be 2.5 E-1. It is estimated that the mean probability of a broken RHR pipe crimping enough CRD lines to prevent a scram (about 5 to 10 adjacent lines) is 1.0.

Based on the above assumptions, the mean value of change in CDF per reactor year is:

dCDF/Rx-Yr = 5.0 E-6

Case 5 (INEEL BWR Event 10): Failure of RHR Piping Resulting in Pipe Whip or Jet Impingement on Control Rod Drive Bundles, Causing Failure by Crimping of Enough Insert/Withdraw Lines to Result in Failure to Scram the Reactor

This event is similar to Case 3 but involves the RHR System piping. The research performed indicates that there is considerable variation among the affected plants regarding the amount of pipe whip protection provided and the proximity of high energy lines to potential targets of concern; walkdowns showed that in at least one case a large "unisolable from the R.C.S." RHR line was routed directly between the two banks of CRD bundles. An RHR pipe break in this vicinity would surely impinge and/or impact on both banks simultaneously.

From NUREG-1150, the RHR DEGB frequency for this material is estimated to be 1 E-4/Rx-Yr. The fraction of BWR primary piping inside containment that is RHR piping is estimated to be 1.0 E-1. The fraction of RHR piping that can impact or impinge on the CRD lines is estimated to be 2.5 E-1. It is estimated that the mean probability of a broken RHR pipe crimping enough CRD lines to prevent a scram (about 5 to 10 adjacent lines) is 1.0.

Based on the above assumptions, the mean value of change in CDF per reactor year is:

dCDF/Rx-Yr = 2.5 E-6

Case 6 (INEEL BWR Event 14): Failure of High Energy Piping Resulting in Pipe Whip or Jet Impingement on Reactor Protection or Instrumentation & Control Electrical, Hydraulic or Pneumatic Lines or Components and Eventually Resulting in Failure of Mitigation Systems and Core Damage

From NUREG-1150, the Large LOCA frequency is 1.0 E-4/Rx-Yr. All high energy piping inside containment is considered. The fraction of high energy piping that can impact or impinge on these lines or components is estimated to be 5.0 E-1. The mean probability of a broken high energy line failing some of these lines or components to the extent that core damage results is estimated as 7.5 E-1.

Based on the above assumptions, the mean value of change in CDF per reactor year is:

dCDF/Rx-Yr = 3.8 E-5

Case 7 (INEEL BWR Event 16): Failure of High Energy Piping Resulting in Pipe Whip Impact on Reactor Building Component Cooling Water (RBCCW) System to the Extent That the RBCCW Pressure Boundary is Broken, Potentially Opening a Path to Outside Containment if Containment Isolation Fails to Occur; Also Possible Loss of RBCCW Outside Containment for Mitigation

From NUREG-1150, the Large LOCA frequency is 1.0 E-4/Rx-Yr. All high energy piping inside containment is considered. The fraction of high energy piping that can impact the RBCCW system is estimated as 1.0 E-1. The probability of an HELB broken pipe rupturing the RBCCW system is 5.0 E-1. The probability of failure to close of containment isolation check valve is 1.0 E-3; the probability of failure to close of a containment isolation motor operated valve is 3.0 E-3; this combines for a total of 4.0 E-3. Since the RBCCW surge tank in the secondary containment is vented to atmosphere and has a relatively small volume, it is assumed that its water inventory will drain quickly; for this reason the mean probability of opening a path to atmosphere outside containment is 1.0. Once this scenario proceeds to this point the RBCCW system in secondary containment will become unavailable, including the RHR heat exchanger; therefore, the probability of losing the RBCCW function outside containment to the extent that core damage occurs is 1.0.

Based on the above assumptions, the mean value of change in CDF per reactor year is:

dCDF/Rx-Yr = 2.0 E-8

The total change in core damage frequency for the above 7 BWR cases is:

dCDF/Rx-Yr = 5.2 E-5 (Ranks HIGH/MEDIUM in Figure 2 of NUREG-0933)

And, for all 16 affected BWRs:

dCDF/Yr = 8.3 E-4 (Ranks HIGH/MEDIUM in Figure 2 of NUREG-0933)

BWR Offsite Dose Table

GSI-156.6.1 Event Number per NUREG/CR-6395	GSI-156.6.1 dCDF (Events/Rx-Yr)	WASH-1400 Release Category	WASH-1400 Offsite Dose (Person-Rem/ Event)	Offsite Dose (OSD) (Person-Rem/ Reactor Year)
BWR Event 1	2.0 E-6	BWR-3	5.1 E+6	10.2
BWR Event 5	5.0 E-6	BWR-4	6.1 E+5	3.1
BWR Event 9	4.0 E-6	BWR-3	5.1 E+6	20.4
BWR Event 10	2.5 E-6	BWR-4	6.1 E+5	1.5
BWR Event 12	4.0 E-7	BWR-3	5.1 E+6	2.0
BWR Event 14	3.8 E-5	BWR-4	6.1 E+5	23.2
BWR Event 16	2.0 E-8	BWR-3	5.1 E+6	0.1
			Total	60.5

For the 17 affected BWRs, the estimated change in offsite dose per reactor (d Person-Rem/Reactor) is:

$$\frac{60.5 \text{ Person-Rem}}{\text{Reactor-Year}} \times 17 \text{ Average Remaining Years} = \frac{1029 \text{ Person-Rem}}{\text{Reactor (Offsite)}} \ *$$

*(Ranks HIGH/MEDIUM in Figure 2 of NUREG-0933)

For 20 years of life extension:

$$\frac{60.5 \text{ Person-Rem}}{\text{Reactor-Year}} \times 37 \text{ Average Remaining Years} = \frac{2239 \text{ Person-Rem}}{\text{Reactor (Offsite)}} \ *$$

*(Ranks HIGH/MEDIUM in Figure 2 of NUREG-0933)

And the estimated change in offsite dose for the 16 affected BWRs is:

$$\underline{1029 \text{ Person-Rem}} \times 16 \text{ Affected BWRs} = 16{,}464 \text{ Person-Rem}^*$$

Reactor (Total Offsite, All Affected BWRs)

*(Ranks MEDIUM/LOW in Figure 2 of NUREG-0933)

For 20 years of life extension:

$\frac{2239 \text{ Person-Rem}}{\text{Reactor}}$ x 16 Affected BWRs = 35,824 Person-Rem* (Total Offsite, All Affected BWRs)

*(Ranks HIGH/MEDIUM in Figure 2 of NUREG-0933)

PWRs

Case 1 (INEEL PWR Event 9): Failure of Non-Leak-Before-Break Reactor Coolant System, Feedwater, or Main Steam Piping Resulting in Pipe Whip or Jet Impingement on Reactor Protection or Instrumentation & Control Electrical, Hydraulic or Pneumatic Lines or Components and Eventually Resulting in Failure of Mitigation Systems and Core Damage

From NUREG-1150, the HELB frequency in the above listed systems is 1.5 E-3/Rx-Yr. All of the listed high energy piping inside containment is considered. The fraction of high energy piping that can impact or impinge on these lines or components is estimated to be 1.0 E-1. The mean probability of a broken high energy line failing some of these lines or components to the extent that core damage results is estimated as 5.0 E-1.

Based on the above assumptions, the mean value of change in CDF per reactor year is:

dCDF/Rx-Yr = 7.5 E-5

Case 2 (INEEL PWR Event 16): Failure of Main Steam or Feedwater Piping Resulting in Pipe Whip and Containment Impact/Failure, with Resultant Failure of All Emergency Core Cooling Systems

From NUREG-1150, the DEGB frequency in Feedwater (FW) piping is estimated to be 4 E-4/Rx-Yr; for Main Steam (MS) piping it is estimated as 1 E-4/Rx-Yr. The fraction of FW piping that can impact the containment shell is estimated as 1.0 E-1; the fraction of MS piping is also estimated as 1.0 E-1; this fraction remains 1.0 E-1. The mean probability of a FW or MS system broken pipe rupturing the containment metal shell was 5.0 E-1. The mean probability of additional I&C or ECCS systems failures to the extent that core damage results is estimated as 4.8 E-5 for the case involving FW piping breaks, and 9.8 E-5 for the case involving MS piping breaks.

Based on the above assumptions, the mean value of change in CDF per reactor year is:

dCDF/Rx-Yr = 1.4 E-9

Case 3 (INEEL PWR Event 17): Failure of Main Steam or Feedwater Piping Resulting in Pipe Whip Impact on Component Cooling Water (CCW) System to the Extent That the CCW Pressure Boundary is Broken, Potentially Opening a Path to Outside Containment if Containment Isolation Fails to Occur; Also Possible Loss of CCW Outside Containment for Mitigation

From NUREG-1150, the DEGB frequency in Feedwater (FW) piping is estimated to be 4 E-4/Rx-Yr; for Main Steam (MS) piping it is estimated as 1 E-4/Rx-Yr; this combines for a total of 5.0 E-4. The fraction of FW piping that can impact the CCW system is estimated as 1.0 E-1; the fraction of MS piping is also estimated as 1.0 E-1; this fraction remains 1.0 E-1. The probability of a FW or MS system broken pipe rupturing the CCW system is 5.0 E-1. The probability of failure to close of containment isolation check valve is 1.0 E-3; the probability of failure to close of a containment isolation motor operated valve is 3.0 E-3; this combines for a total of 4.0 E-3. Since the CCW surge tank is in the auxiliary building near where mitigation equipment is, is vented to atmosphere and has a relatively small volume, it is assumed that its water inventory will drain quickly; for this reason the mean probability of opening a path to atmosphere outside containment is 1.0. Once this scenario proceeds to this point the CCW system outside containment will become unavailable, including the RHR heat exchanger; therefore, the probability of losing the CCW function outside containment to the extent that core damage occurs is 1.0.

Based on the above assumptions, the mean value of change in CDF per reactor year is:

dCDF/Rx-Yr = 1.0 E-7

The total change in core damage frequency for the above 3 PWR cases is:

dCDF/Rx-Yr = 7.5 E-5 (Ranks HIGH/MEDIUM in Figure 2 of NUREG-0933)

And, for all 25 affected PWRs:

dCDF/Yr = 1.9 E-3 (Ranks HIGH/MEDIUM in Figure 2 of NUREG-0933)

PWR Offsite Dose Table

GSI-156.6.1 Event Number per NUREG/CR-6395	GSI-156.6.1 dCDF (Events/Rx-Yr)	WASH-1400 Release Category	WASH-1400 Offsite Dose (Person-Rem/ Event)	Offsite Dose (OSD) (Person-Rem/ Reactor Year)
PWR Event 9	7.5 E-5	PWR-6	1.5 E+5	11.3
PWR Event 16	1.4 E-9	PWR-4	2.7 E+6	0.004
PWR Event 17	1.0 E-7	PWR-4	2.7 E+6	0.3
			Total	11.6

For the 25 affected PWRs, the estimated change in offsite dose per reactor (d Person-Rem/Reactor) is:

$$\frac{11.6 \text{ Person-Rem}}{\text{Reactor-Year}} \times 17 \text{ Average Remaining Years} = \frac{197 \text{ Person-Rem}}{\text{Reactor (Offsite)}} \ *$$

* Ranks MEDIUM/LOW in Figure 2 of NUREG-0933

For 20 years of life extension:

$$\frac{11.6 \text{ Person-Rem}}{\text{Reactor-Year}} \times 37 \text{ Average Remaining Years} = \frac{429 \text{ Person-Rem}}{\text{Reactor (Offsite)}} \ *$$

*Ranks HIGH/MEDIUM in Figure 2 of NUREG-0933

And the estimated change in offsite dose for the 25 affected PWRs is:

$$\frac{197 \text{ Person-Rem}}{\text{Reactor}} \times 25 \text{ Affected PWRs} = 4{,}925 \text{ Person-Rem*}$$

(Total Offsite, All Affected PWRs)

*Ranks HIGH/MEDIUM in Figure 2 of NUREG-0933

For 20 years of life extension:

$$\frac{429 \text{ Person-Rem}}{\text{Reactor}} \times 25 \text{ Affected PWRs} = 10{,}725 \text{ Person-Rem*}$$

(Total Offsite, All Affected PWRs)

*Ranks MEDIUM in Figure 2 of NUREG-0933

The estimated total offsite dose for the 41 affected plants (BWRs and PWRs) is:

16,464 + 4,925 = 21,389 Person-Rem* (Total Offsite, All Affected Reactors w/o life extension)

*Ranks MEDIUM in Figure 2 of NUREG-0933

35,824 + 10,725 = 46,549 Person-Rem* (Total Offsite, All Affected BWRs & PWRs w/ life extension)

*Ranks HIGH/MEDIUM in Figure 2 of NUREG-0933

Cost Estimate

Industry Cost: Implementation of the possible solution is assumed to require the performance of engineering analyses inside containment, perform system walkdowns, and provide a report to the NRC. Ultimately, it is expected that operating procedures and/or technical specifications will be modified, inservice inspections will be enhanced, or physical modifications will be done either to piping (probably addition of pipe whip restraints or jet shields) or to the inside containment leakage detection system. It is expected that the cost to each plant will be $1M. Therefore, for the 41 affected plants (16 BWRs and 25 PWRs) the total implementation cost is estimated to be $41M. This estimate was based on the presumption that the level of effort at the affected plants would be similar to that which resulted for this issue during the SEP program review of the 10 earliest SEP plants.

NRC Cost: Development and implementation of a resolution is estimated to cost $1M; primarily involving review of industry submittals and possible proposed changes to hardware.

Total Cost: The total industry and NRC cost associated with the possible solution is $42M.

Impact/Value Assessment

$$S = \frac{\text{Total Cost (\$)}}{\text{Person-Rem (All Reactors)}}$$

$$= \frac{\$42M}{21{,}389 \text{ Person-Rem}}$$

= $1960/Person-Rem* w/o Life Extension

*Ranks HIGH in Figure 2 of NUREG-0933

$$S = \frac{\text{Total Cost (\$)}}{\text{Person-Rem (All Reactors)}}$$

$$= \frac{\$42M}{46{,}549 \text{ Person-Rem}}$$

= $900/Person-Rem* w/ 20 Years of Life Extension

*Ranks HIGH in Figure 2 of NUREG-0933

OTHER CONSIDERATIONS

1. The Updated Safety Analysis Report for an SEP-III BWR (i.e., one of the 41 plants potentially affected by this issue) stated that, in the event of a DEGB, the broken pipe would strike the Mark I Containment and deform it significantly. However, another BWR of about the same vintage is known to have been required to add energy absorbing

structures to protect the Mark I Containment from pipe whip, prior to receipt of an operating license. Therefore, it appears that there is considerable variation among the affected plants regarding the amount of pipe whip protection provided.

2. Pipe breaks have actually occurred in the industry. Examples include a Surry Feedwater line break, a WNP-2 Fire System valve structural pressure boundary failure, and a Ft. Calhoun 12" Steam line break.

3. Some suspect configurations were observed in the SEP-III walkdown plants; for example, at one BWR a very close proximity exists between a large RHR (unisolable from R.C.S.) pipe and both banks of the Control Rod Drive piping, and at one PWR it appeared that a large volume of piping penetrated the containment near where a large amount of electrical wiring also penetrated the containment. This demonstrates that even through modest efforts (i.e., sampling walkdowns of a sampling of plants) configurations of potential concern have been identified.

4. Readily available plant documentation provides very little insights regarding actual proximity of high energy piping and potential targets or concern. The potential lack of adequate separation of redundant system targets (e.g., I&C electrical wiring) is also a concern.

5. Uncertainty remains a significant factor because of the large scope of this issue. This is because of the large number and types of plants, and significant differences in the specific as-built details applicable to this issue.

6. Many of the affected plants are either currently applying for life extension or are expected to in the near future. Most of the lead life extension applications will be from the affected plants for many years to come.

7. Although there is a large apparent disparity between the BWR and PWR cases evaluated, it must be remembered that much of the background of this issue was based on sampling walkdowns; that is, only selected portions of selected plants were available for these walkdowns. Therefore, it is important to treat the BWR and PWR evaluations equally during the next phase of the evaluation. Also, some of the listed scenarios seem to have low probabilities but potentially high consequences. They should be further evaluated.

CONCLUSION

Several potential accident scenarios were identified; 7 for BWRs and 3 for PWRs. Mean values for core damage were estimated for each and the cumulative effect of each group was also estimated. When compared to Figure 2 of NUREG-0933, these values mostly showed that this issue is of HIGH/MEDIUM safety significance. Further evaluations which included estimates of offsite doses and costs for potential solutions showed that this issue is of HIGH priority.

REFERENCES

1. Giambusso, A., 1972, AEC Deputy Director for Reactor Projects, Directorate of Licensing, generic letter to applicable BWR and PWR plants regarding postulated pipe failures outside of the containment structure, issued December 1972.

2. O'Leary, J.F., 1973, AEC Director, Directorate of Licensing, generic letter to applicable BWR and PWR plants regarding clarification of A. Giambusso letter of 12/72, issued January through July 1973.

3. Memorandum from E. S. Beckjord (RES) to A. C. Thadani (NRR) dated October 31, 1994.

4. Memorandum from T. E. Murley (NRR) to E. S. Beckjord (RES) dated February 5, 1991. (User Need Letter).

5. NUREG/CR-6395, "Enhanced Prioritization of Generic Safety Issue 156.6.1, Pipe Break Effects on Systems and Components Inside Containment," draft dated June 1999.

6. WASH-1400 (NUREG-75/014), "Reactor Safety Study, An Assessment of Accident Risks in U.S. Commercial Nuclear Power Plants," U.S. Nuclear Regulatory Commission, October 1975.

7. G. S. Holman, C. K. Chou (LLNL), "Assessment of Value-Impact Associated with the Elimination of Postulated Pipe Ruptures from the Design Basis for Nuclear Power Plants," March 29, 1985.

8. NUREG/CR-2800, "Guidelines for Nuclear Power Plant Safety Issue Prioritization Information Development," U.S. Nuclear Regulatory Commission, February 1983, (Supplement 1) May 1983, (Supplement 2) December 1983, (Supplement 3) September 1985, (Supplement 4) July 1986.

9. NUREG/CR-4627, "Generic Cost Estimates," U.S. Nuclear Regulatory Commission, June 1986.

10. NUREG/CR-4550, "Analysis of Core Damage Frequency: Surry, Unit 1 Internal Events," April 1990.

11. NUREG-0933, "A Prioritization of Generic Safety Issues," July 1991.

12. NUREG/CR-4792, "Probability of Failure in BWR Reactor Coolant Piping," Volume 1, March 1989.

13. NUREG-1150, "Severe Accident Risks: An Assessment for Five U.S. Nuclear Power Plants," December 1990.

Enclosure 3

NUREG/CR-6395
INEEL/EXT-99-1509

Enhanced Prioritization of Generic Safety Issue 156-6.1 Pipe Break Effects on Systems and Components Inside Containment (Draft)

A. G. Ware
D. K. Morton
M. E. Nitzel
S. A. Eide

Manuscript Completed September 1999

Idaho National Engineering and Environmental Laboratory
Lockheed Martin Idaho Technologies Company
Idaho Falls, Idaho 83415

Prepared for the
Division of Engineering
U.S. Nuclear Regulatory Commission
Office of Nuclear Reactor Research
Washington, D.C. 20555-0111
Under DOE Contract No. DE-AC07-94ID13223
Job Code W6362

ABSTRACT

The United States Nuclear Regulatory Commission is currently assessing the need to review the 41 older nuclear power plants referred to as the Systematic Evaluation Program Phase III (SEP-III) plants. Generic Safety Issue (GSI) 156-6.1 deals with whether the effects of pipe breaks inside containment have been adequately addressed in these plants' designs. To give a basis for the prioritization of this GSI, a research program was performed to evaluate the degree of pipe protection in the SEP-III plants. This included a review of the earlier SEP-II and the late SRP plants' pipe break protection, visits to five plants to view pipe break protection and locations of potential targets with respect to large piping, and discussions with the plants' staffs. First and second levels of concerns were developed to identify potential pipe break locations, targets, and consequences. The second-level list of concerns was used to develop a qualitative ranking on whether each item in the list had a high, medium, or low consequence of affecting the core damage frequency (CDF). Quantitative estimates were made of the change in CDF for the sequences ranked high and medium based on existing probabilistic risk assessment studies. Potential plant changes, both physical and procedural, were identified that could reduce the increase in the CDF due to pipe breaks inside containment. The costs of these potential changes were estimated.

CONTENTS

ABSTRACT iii

EXECUTIVE SUMMARY xi

ACKNOWLEDGMENTS xxi

ACRONYMS xxiii

1. INTRODUCTION 1

1.1 Background 1

1.2 NRC Staff Draft Prioritization 3

2. PIPE BREAK FREQUENCY ESTIMATES 5

2.1 Review of Available Pipe Degradation and Failure Data 5

2.2 Leak-Before-Break Status for SEP-III Plants 6

2.3 Estimation of Pipe Failure Rates Applicable to SEP-III Plants 8

3. REVIEW OF UPDATED FINAL SAFETY ANALYSIS REPORTS AND RELATED SAFETY EVALUATION REPORTS 15

3.1 Review of SEP-II UFSARs and Related SERs 16

3.1.1 Information Gathering Process 16
3.1.2 Results From IPSAR NUREGs 17
3.1.3 Conclusions 17

3.2 Review of SEP-III UFSARs and Related SERs 22

3.2.1 Information Gathering Process 22
3.2.2 Results of Reviews 25
3.2.3 Conclusions 25
3.2.4 BWR Pipe Replacement 37

3.3 Review of Representative Non-SEP Plant UFSARs and Related SERs 42

3.3.1 Information Gathering Process 42
3.3.2 Results of Reviews 43
3.3.3 Conclusions 43

3.4 Plant Visit Observations 43

3.4.1 Trojan Nuclear Power Plant 48
3.4.2 Browns Ferry Nuclear Power Plant, Unit 3 51
3.4.3 Quad Cities Nuclear Power Plant, Unit 2 54

3.4.4 H. B. Robinson Nuclear Power Plant, Unit 2 56
3.4.5 Vermont Yankee Nuclear Power Plant 58

4. IDENTIFICATION OF A FIRST-LEVEL LIST OF POTENTIAL SEP-III CONCERNS 61

4.1 Introduction 61

4.2 Criteria 61

4.3 First-Level List 73

4.4 Potential Consequences of a High-Energy Pipe Break Inside Containment 75

5. DEVELOPMENT OF A SECOND-LEVEL LIST OF POTENTIAL SEP-III CONCERNS 81

5.1 PWR Plants 81

5.2 BWR Plants 92

6. RANKING AND QUANTIFICATION OF SEP-III PLANT PIPE BREAKS INSIDE CONTAINMENT 97

6.1 Event Ranking 97

6.2 Event Quantification 97

6.3 Additional System Considerations 114

6.3.1 CRD Lines 114
6.3.2 I&C Systems 114
6.3.3 CCW System 121
6.3.4 RBCCW System 128
6.3.5 Valve Failure Probabilities 133

7. COST ANALYSIS 135

7.1 Possible Corrective Actions 135

7.1.1 Plant Design Changes 135
7.1.2 Protective Hardware 135
7.1.3 Preventive Hardware 136
7.1.4 Operating/Procedure Changes 136
7.1.5 Test/ISI 137
7.1.6 Analysis 137

7.2 Cost Estimates 138

7.3 Plant Walkdowns 138

7.3.1 Assumptions 138
7.3.2 Costs 138

8. CONCLUSIONS 143

9. REFERENCES 145

LIST OF FIGURES

3-1. General arrangement of a Westinghouse four-loop NSSS 49

3-2. General arrangement of a General Electric NSSS with Mark I drywell 52

4-1. Consequences of a single pipe break inside containment 77

4-2. Consequences of a single pipe leak inside containment 78

4-3. Consideration of a single pipe break inside containment by effect 79

5-1. Older SEP-III PWR (Westinghouse 3-loop) inside containment plan view 82

5-2. Newer SEP-III PWR (Westinghouse 4-loop) inside containment plan view 83

5-3. Newer SEP-III PWR (Westinghouse 4-loop) separation of main steam and feedwater lines inside containment 84

5-4. PWR prestressed concrete atmospheric design 86

5-5. PWR reinforced concrete subatmospheric design 87

5-6. PWR prestressed concrete ice condenser design 88

5-7. PWR cylindrical metal design 89

5-8. Typical PWR prestressed concrete containment wall section 90

5-9. Typical PWR reinforced concrete containment wall section 91

5-10. Elevation view of BWR Mark I metal containment and reactor building 93

5-11. Plan view of BWR Mark I metal containment spherical region 94

6-1. CCW system 124

6-2. RBCCW system 129

LIST OF TABLES

2-1. Location, mechanism, and number of leaks in piping greater than 51 mm (2 in.) at U.S. nuclear power plants inside containment 5

2-2. Leak-before-break status of SEP-III plants (1995) 7

2-3. List of PRA reports reviewed 8

2-4. Failure frequencies (events/yr) for PWR plant primary system piping 10

2-5. Failure frequency uncertainties (events/yr) for PWR plant primary system piping 11

2-6. Failure frequencies (events/yr) for BWR plant piping 12

2-7. Failure frequency uncertainties (events/yr) for BWR plant piping 13

2-8. Failure frequencies (events/yr) for PWR plant secondary system piping inside containment 13

2-9. Failure frequency recommendations (events/yr) for piping inside containment (low/mean/high) 14

3-1. Review results from search of SEP-II plant UFSARs 18

3-2. Review results from IPSAR NUREGs for SEP-II plant evaluations 19

3-3. Details of SEP-II plant changes required by IPSAR NUREGs 20

3-4. SEP-III plants selected for UFSAR review 24

3-5. Review of SEP-III plant UFSARs 26

3-6. Review results from SEP-III BWR plant SERs 28

3-7. Review results from SEP-III PWR plant SERs 31

3-8. Listing of BWR SEP-III plants by timeframe and initial date of licensing SER 38

3-9. Listing of PWR SEP-III plants by timeframe and initial date of licensing SER 38

3-10. Response of SEP-III BWR plants to IGSCC concerns (1995) 40

3-11. Review of non-SEP plant UFSARs 44

3-12. Review results from non-SEP BWR SERs 45

3-13. Review results from non-SEP PWR SERs 46

4-1. Summary of commentary missing from SEP-III BWR SERs 62

4-2. Summary of commentary missing from SEP-III PWR SERs 63

4-3. Commentary missing from SEP-III BWR SERs (plant specific) 64

4-4. Commentary missing from SEP-III PWR SERs (plant specific) 68

4-5. High-energy lines for inside containment break consideration 74

5-1. Containment types for PWR SEP-III plants 85

5-2. PWR pipe break locations and potential targets based on observations from two plant visits 93

5-3. Containment types for BWR SEP-III plants 96

5-4. BWR pipe break locations and potential targets based on observations from three plant visits 96

6.1. Ranking scheme that illustrates the impact that containment failure and CDF have on offsite consequences 97

6.2. Ranking of BWR pipe break events inside containment 98

6-3. Ranking of PWR pipe break events inside containment 100

6-4. Quantification of dominant BWR pipe-break events inside containment 103

6-5. Quantification of dominant PWR pipe-break events inside containment 103

6.6. Proposed failure rates of various types of water/steam nuclear plant valves to open and close 134

7-1. Applicability of NUREG/CR-4627 categories 139

7-2. Cost summary 140

7-3. Plant walkdown cost estimate 141

EXECUTIVE SUMMARY

In 1967, the Atomic Energy Commission (AEC) published the General Design Criteria (GDC) for comment and interim use. Until 1972, the AEC staff's implementation of the GDC required consideration of postulated pipe break effects inside containment; however, due to the lack of documented review criteria, AEC staff review positions were continually evolving. Review uniformity was finally developed with the issue of Regulatory Guide 1.46 in 1973. In 1975, after the AEC had reorganized into the Nuclear Regulatory Commission (NRC), the NRC staff issued *Standard Review Plan* (SRP) sections 3.6.1 and 3.6.2 which stated the specific structural and environmental effects of pipe whip, jet impingement, flooding, etc. on systems and components relied on for safe reactor shutdown were considered.

The NRC is currently assessing the need to review the 41 older nuclear power plant units referred to as the Systematic Evaluation Program Phase III (SEP-III) plants that were licensed while the criteria were evolving. Generic Safety Issue (GSI) 156-6.1 deals with whether the effects of pipe break inside containment have been adequately addressed in these plants' designs. The NRC provided requirements to the industry regarding pipe breaks outside of containment by issuing the "Giambusso" and "O'Leary" letters. Since these requirements apply to all the affected plants, pipe breaks outside of containment are considered a compliance issue and not part of GSI 156-6.1.

The NRC's assessment involved an initial prioritization of the issue to determine whether the risk involved was sufficiently high to warrant assigning it as a Generic Safety Issue designated for a more detailed evaluation. The initial prioritization considered the current status of the SEP-III plants with regard to pipe break probabilities, probabilistic risk assessments, pipe break effects on the Core Damage Frequency (CDF) estimates, and the cost estimates for any potential corrective actions. The NRC staff performed an initial "draft" prioritization, but large uncertainties were recognized (for example, in the probability of various types of pipe failures, in the probability of subsequent safety-related system failures after pipe breaks, and in the cost estimates for any potential improvements to reduce the CDF), making the prioritization inappropriate for use. Therefore, the present effort seeks to enhance the existing "draft" prioritization of GSI 156-6.1, reducing the uncertainties as much as possible.

Pipe Break Frequency Estimates

Several of the high-energy lines inside containments have apparently experienced no degradation. However, some lines have experienced cracking or wall thinning. In a few cases, significant leaks have occurred, but no major breaks that damaged critical equipment.

Leak-before-break (LBB) technology was approved by an amendment to GDC-4 of Appendix A to 10 CFR Part 50, and became effective in 1987. Although the NRC has not approved LBB for any BWR plants, all PWR SEP-III plants have LBB approved for their main coolant loops. Licensees may use LBB

as justification for the removal of primary loop supports such as part of snubber reduction programs, and the removal of pipe whip restraints and jet impingement barriers. At least SEP-III plant has had LBB approved for its surge line.

The available data were reviewed to arrive at pipe break frequency estimates. Most recent PRA reports base their failure frequencies on previous PRAs, and the previous PRAs mainly use three basic older references: WASH-1400, EPRI NP-438, and PLG-0500. A more recent study was included in NUREG-1150, issued in 1990, which has had widespread review. The most recent study is in NUREG/CR-5750, which considered piping history through 1997. It recommended frequencies about an order of magnitude below WASH-400 and NUREG-1150. This study is very recent and has not received widespread review. After a review of the failure estimates, it was decided to use the NUREG-1150 frequencies and uncertainties for reactor coolant system.

Review Of Updated Final Safety Analysis Reports and Related Safety Evaluation Reports

An important aspect of this research program was to obtain information regarding the design efforts made by plant licensees to mitigate the effects of postulated pipe breaks inside containment. Information was gathered for three groups of plants: the SEP-II plants (the 10 earliest SEP plants), the SEP-III plants, and selected non-SEP plants of more recent licensing vintage. Since the SEP-II plants were subjected to a more recent (early 1980s) NRC evaluation of inside-containment pipe-break design, any information regarding additional analyses and/or plant modifications that might have been required would be useful for comparison to what was done on the SEP-III plants. The more recently licensed (non-SEP) plants were reviewed since their pipe break designs had been evaluated by the NRC with uniform acceptance criteria in place.

The NRC's Nuclear Document System (NUDOCS) was used as one of the sources of information to complete this task. An important limitation is that NUDOCS is relatively complete only for docketed material dating back to the 1979 or 1980 timeframe. It does not necessarily contain documentation dated early than 1980. Two UFSARs were reviewed, but contained very little substance. The IPSAR NUREGs for SEP-II Topics III-4.C and III-5.A were also reviewed. All of the SEP-II plants were required to perform some form of engineering evaluation in order to satisfactorily address each topic and demonstrate adequate safety to the NRC staff. A typical evaluation consisted of (1) defining a pipe break location, (2) determining the consequences resulting from pipe whip, jet spray, impingement, or other related pipe break effects, and (3) determining if the plant operators could still bring the plant to a safe operating condition using alternate systems, redundant systems, or other means. As a result of these pipe break effects reviews, two SEP-II plants were required to make inspection changes, one plant was required to make Technical Specification changes, two plants were required to make procedural changes, and six SEP-II plants were required to make physical modifications. Looking at the SEP-II plants either as a group or separately as PWRs and BWRs, no common locations or reasons for the modifications were determined. It appears that the resulting modifications display little if any pattern. This reinforces the view that each plant

has many unique design features and it is those unique aspects (e.g., plant layout, arrangement and construction features of interior walls, the relative locations of components, equipment, and structures, amount of system redundancy and separation used in the design) of each plant that must be considered in pipe break evaluations.

Although all of the reviewed SEP-III plant UFSARs indicated that pipe breaks were considered, the information presented regarding affected systems, design provisions made to mitigate the effects of pipe break, and other more detailed information was not located. In general, the most obvious conclusion determined from review of the SEP-III plant UFSAR and SER information was that the discussion of pipe-break effects inside containment continually increased with later construction dates. Discussion of pipe break topics was notably absent in information for the earlier plants, whereas the later plants provided much more information regarding criteria, evaluations, multiple pipe breaks for multiple systems, and system interactions with other adjacent safety-related equipment.

When taken as a whole, the UFSARs for the non-SEP plants contained more extensive descriptions of the criteria used to designate high- and moderate-energy piping systems, the analysis techniques used in their qualification, how the postulated break locations were determined, and the plant design provisions (e.g., pipe whip restraints, physical barriers, etc.) that were employed to mitigate the effects of a pipe break event. In general, the most obvious conclusion determined from all of the non-SEP plant reviews was that little changed between the later-timeframe SEP-III plants and the non-SEP plants

Plant Visit Observations

Five plant visits were conducted to obtain information from direct observation of the relative locations of representative high- and moderate-energy piping systems, equipment important to plant safety, and the measures taken to mitigate the effects of pipe breaks. Walkdowns were made to perform qualitative judgements regarding the general susceptibility of the SEP-III plants' equipment to damage resulting from pipe ruptures or jet impingement, and the observations are presented below.

The Trojan Nuclear Power Plant is a four-loop PWR using a Westinghouse nuclear steam supply system (NSSS). The plant entered commercial operation in May 1976 (later-timeframe SEP-III PWR) and operated for approximately 15 years before being permanently closed by the licensee. The plant was designed with a high degree of compartmentalization. This design approach contributed to the physical separation of systems and equipment that help mitigate the effects of a postulated pipe break in any one loop of the RCS or the high-pressure piping connected to any loop. We observed a minimum of jet impingement shielding of individual items (e.g., electrical boxes). This did not seem unwarranted given the degree of physical separation, redundancy, and the number of pipe supports. However, components were observed in the pressurizer compartment that appeared susceptible to jet loads from pipe breaks in that part of the compartment. The electrical penetrations and the main steam and feedwater piping for the "A" and "D" loops were routed in the same general area. Few pipe whip restraints existed in this area. It appeared that the possibility

existed for jet impingement loads and/or impact loads to occur on either some of the electrical penetrations or the cable trays if a steam or feedwater pipe ruptured in this area. The steam/feedwater lines to each loop were physically separated by a concrete slab so that they could not impact each other. Further information would be necessary to verify that sufficient separation and isolation of electrical cables exists in the concentrated area of cabling near the penetrations. We observed a minimal number of jet impingement shields. Given the licensee's stated approach of using whip restraints, barriers, and physical separation to reduce the effects of a high-energy pipe break, this lack of jet impingement shields may not be unusual.

The Browns Ferry Nuclear Power Plant, Unit 3, is a General Electric BWR-4 design with a Mark I containment. The plant entered commercial operation in March 1977 and operated for approximately 8 years before being temporarily closed by the licensee. The plant was undergoing regulatory review for an expected restart of commercial operation at the time of the visit. We observed that this plant was designed with a minimum compartmentalization inside the drywell. This is a generic design feature of the Mark I containment in that the compactness of the drywell piping layout affords minimal space for compartment walls. This results in many of the high-energy systems being close to each other. Examples of large whip restraints were observed during the plant walkdown. We observed that the minimal amount of physical separation and compartmentalization allowed by the drywell physical volume constraints would put more emphasis on the use of whip restraints, conservative design practices, or other measures to mitigate the effects of a high-energy line break event. A minimum of jet impingement shielding of individual items (e.g., electrical boxes or cable trays) was observed. The CRD piping bundle had no physical barriers separating it from other high-energy piping systems in the general area. Our review of plant drawings showed that the safety-related electrical penetrations appeared to have a high degree of physical separation. Typically, these systems are redundant with one "train" entering the drywell through a separate penetration while the other train enters through a separate penetration located on the other side (usually about 180° away) of the drywell shell. This layout should help minimize the deleterious effects of a pipe break on safety-related electrical system functions.

The Quad Cities Nuclear Power Plant, Unit 2, is a General Electric BWR-3 design with a Mark I containment. The plant entered commercial operation in April of 1972 (early-timeframe SEP-III BWR). Like Brown's Ferry, Unit 3, the plant was designed with a minimum compartmentalization inside the drywell. A minimum of jet impingement shielding of individual items (e.g., electrical boxes or cable trays) was observed. The CRD piping bundles had no physical barriers separating them from other high-energy piping systems in the general area. Some CRD bundles were located directly adjacent to RHR piping. The safety-related electrical penetrations were spaced around the circumference of the drywell. We did not have sufficient information to determine whether the redundant trains had been sufficiently physically separated.

The H. B. Robinson Nuclear Power Plant, Unit 2, is a three-loop early-timeframe SEP-III PWR using a Westinghouse nuclear steam supply system (NSSS). The containment is a prestressed concrete, large-dry design, with the inside surface of the containment lined with steel plates. In the late 1960s, Westinghouse asked the architect-engineer to ensure that the main steam piping, feedwater piping, and the reactor coolant system was restrained from pipe whip. In the containment area outside the crane support wall, the main steam and feedwater piping were far more restrained than these systems on the other PWR we visited (Trojan). Unlike the Trojan plant, H.B. Robinson Unit 2 had no whip restraints on the main steam and feedwater lines inside the crane wall near the steam generators. However, there were no targets in the area. The plant was designed with a high degree of compartmentalization. A minimum of jet impingement shielding of individual items (e.g., electrical boxes) was observed. This did not seem unwarranted given the degree of physical separation, redundancy, and the number of supports mentioned above. All balance-of-plant piping (excluding the main steam and feedwater lines) and the electrical penetrations entered the containment at approximately the same location, rather than spaced around the containment circumference. This design makes it far more likely that a high-energy line pipe break (or leak) at this location would damage electrical and instrumentation lines.

The Vermont Yankee plant (BWR/4, Mark I steel containment) was visited with an NRC/NRR staff member who was studying pipe break effects associated with the reactor building closed cooling water (RBCCW) system. A pipe break associated with the RBCCW system had previously been identified as a potential problem by the Millstone 1 BWR licensee. The portion of the Vermont Yankee RBCCW piping outside containment was formerly classed as safety related, but in recent years the licensee had no longer kept up that classification. There is a single check valve separating the safety-related and non-safety-related portions of the RBCCW inside containment, and a single motor-operated valve separating the two portions outside containment. In the event of a high energy line break within containment, pipe whip or jet impingement could sever the RBCCW system. In the event of a single failure of one of the isolation valves, pressure inside containment could rise to about 40 psi and force water outside the containment through the RBCCW system. Since the RBCCW system outside containment is not classified as safety related, this system could rupture, resulting in a containment-to-atmosphere leak. Two bundles of the CRD piping entered the containment on either side of the reactor. They were routed rather directly from the containment wall to the reactor. The piping appeared well supported. One recirculation line riser and the LPCI (RHR) line which connects with it were in the vicinity of the CRD lines; however, because of the physical separation distances, pipe whip or jet impingement damage to CRD lines from the LPCI line appeared to be less likely than in the other two BWRs. Steel plates with corrugated backing had been placed on the lower portions of the drywell interior. In the areas toured, the lining appeared to be continuous; no portions were observed to have been removed.

List of Potential SEP-III Concerns

The NSSS designs of nuclear power plants in the United States are somewhat similar for the same classes of plants. However, each plant is unique in

the overall layout of structures, systems, and components, and the relative locations of other piping systems, their supports, and associated mechanical and electrical equipment may be significantly different. For this reason, a detailed list of potential concerns resulting from a postulated high-energy line break event would necessarily be a plant-specific list. The only exclusion is for the large-bore main reactor coolant loop piping in the PWR plants. Because of the acceptance of the leak-before-break methodology, these lines will not be considered susceptible to failure. Therefore, pipe whip effects were excluded from consideration, but jet impingement effects from a leak were included. The evaluation of a pipe break must begin with the assumed loss of function of the pipe line that broke. With the exception of Nine Mile Point Unit 1, all of the BWR plants reported that pipe whip restraints were installed on their recirculation piping. This obviously helps to mitigate recirculation pipe break effects, but insufficient information did not permit the assumption that the recirculation piping was adequately restrained and satisfied the criteria contained in the SRP. Therefore, pipe breaks were assumed to occur in the BWR recirculation piping systems.

Two PWR plants were visited to review the plant layout, the pipe break and jet impingement protection, and the relative location of components to one another. In addition to evaluating the pipe break protection for the specific plant, we also attempted to use the plant layouts to generalize possible break locations and targets for other plants, for which we did not know the pipe break protection history. We did not have access to the plant stress analyses, so we did not know the locations of high stress or fatigue usage > 0.1 that would be used to identify pipe break locations using today's standards. In our brief tours inside containment, we did not have the time to survey each high-energy line along its entire route, noting the potential break points and targets, but rather we obtained a general overall view from several locations inside the containment. A number of pipe whip restraints on high-energy lines were observed in both plants, but there appeared to be only minimal, if any, jet impingement shields, although the concrete walls serve this purpose. The two plants were designed by the same NSSS vendor; nevertheless, we noted several major differences:

1. Although the reactor coolant systems and major branch piping within the secondary shield (crane) wall were basically the same, the remainder of the piping, particularly the branch piping between the crane wall and the containment as well as the electrical and instrumentation routing, were field run and quite different.

2. On the newer plant that was designed to RG 1.46, the electrical and piping penetrations entered the containment in different quadrants. Some main steam and feedwater lines were routed above the electrical penetration area. However, in the older plant, the electrical and piping penetrations were adjacent to one another at the same elevation.

3. The smaller piping (for example, spray, letdown, surge, RHR, and accumulator injection) on the newer plant designed to RG 1.46 had pipe whip restraints. The restraints on the older plant did not appear to be as numerous.

4. All main steam and feedwater lines on the newer plant were separated by physical (concrete) barriers from the lines in other loops. There were pipe whip restraints in the steam generator area. On the older plant the main steam and feedwater lines had no restraints in the steam generator area. However, at this level (an upper elevation in the plant), there did not appear to be any targets for a pipe whip. The main steam and feedwater piping on the older plant had closely spaced large whip restraints in the area of the containment penetration and were strapped to the crane wall along the route from the containment penetration to the steam generators.

Three BWR plants were visited to review the plant layout, the pipe break and jet impingement protection, and the relative location of components to one another. One of the plants was a newer BWR (BWR/4), which is similar to SEP-III BWRs. Although it is not considered to be one of the SEP-III plants, the other two units at this site are SEP-III plants. All three plants share a single USFAR, licensing SER, and numerous (but not all) other SERs. The other two plants were older SEP-III BWRs (BWR/3), for which the documentation on pipe whip and jet impingement was limited. A number of pipe whip restraints were observed on the recirculation lines of these plants, but there appeared to be only minimal, if any, jet impingement shields, other than covers over the vent openings to the torus. The main steam and feedwater lines were not restrained in the upper cylindrical portion of the drywell. The plants had energy-absorbing pads attached to sections on the interior of the spherical portion of the drywell. However, the designs of the pads and the areas covered were not the same for the plants. In contrast to the PWR plants, the BWR plants had minimal compartmentalization. Although the two plants were designed by the same NSSS vendor, General Electric, we noted several major differences:

1. Most of the major piping systems (for example, the recirculation, main steam, and feedwater) are basically the same; however, the remainder of the piping and the electrical and instrumentation routing were field run and quite different.

2. On the newer plant, the electrical and instrumentation lines for different trains entered the containment in different quadrants 180 degrees apart. However, in one of the older plants, it appeared that no attention had been given to separating the different trains.

3. The main steam and feedwater lines on the newer plant had pipe whip restraints added in the containment penetration area. Such restraints were not present on the older plants.

Ranking And Quantification of SEP-III Plant Pipe Breaks Inside Containment

The pipe break events were ranked such that only the most significant need to be considered in detail. The significant events were then quantified in more detail to provide quantitative estimates of the change in CDF resulting from such events. The quantification was performed conservatively, using the worst possible effects of the pipe break based on a general knowledge of the SEP-III plant layouts. In many cases, a pipe break scenario may not be possible at a

specific SEP-III plant because of its physical layout and pipe restraints. The results are presented in the tables below.

Cost Analysis

Various changes in plant hardware and procedures have been proposed that could reduce the potential for, or mitigate the consequences of, pipe break. Some of these changes were required for SEP-II plants, some have been used to mitigate fatigue cracking such as in PWR feedwater nozzles and surge lines, while others have been applied to BWRs to reduce the break potential from IGSCC. Cost estimates for the following list of corrective actions that could reduce the pipe break probabilities of LWR piping were developed: plant design changes, protective hardware, preventive hardware, operating/procedure changes, additional testing and ISI, and additional analysis. The recommended corrective actions for this issue would be in the protective hardware and test/ISI categories.

Our experience in GSI 156-6.1 has shown that a great deal of the balance-of-plant piping, as well as the electrical and hydraulic instrument and control lines, are field routed in both BWRs and PWRs. Consequently, the best and possibly only way to determine the proximities of high-energy lines and their potential targets in the event of a line break are by in-plant walkdowns. This is consistent with the SEP-II plant corrective actions, in that those actions were very plant-specific, indicating that a generic plan to cover all SEP-III plants without evaluating them individually is impractical. Accordingly, a cost estimate was developed for such walkdowns.

Table E-1. Quantification of dominant BWR pipe-break events inside containment.

		Change in CDF Resulting from Pipe Break Event				
	Pipe Break—Affected System(s)	Mean Frequency (events/rx-yr)	Error Factor[a]	5th Percentile (events/rx-yr)	Median (events/rx-yr)	95th Percentile (events/rx-yr)
1.	MS or FW—Containment shell and safety systems entering containment	2.0E-6 (2.0E-6)[b]	13.5 (13.6)	4.2E-8 (3.9E-8)	5.7E-7 (5.6E-7)	7.7E-6 (7.6E-6)
5.	Recirculation—CRD bundle(s)	5.0E-6 (5.0E-6)	14.1 (14.3)	9.8E-8 (8.9E-8)	1.4E-6 (1.4E-6)	1.9E-5 (2.0E-5)
9.	Recirculation—Containment shell and safety systems entering containment	4.0E-6 (4.0E-6)	13.6 (11.8)	8.4E-8 (8.3E-8)	1.1E-6 (1.1E-6)	1.5E-5 (1.3E-5)
10.	RHR—CRD bundle(s)	2.5E-6 (2.5E-6)	11.5 (11.2)	7.3E-8 (7.3E-8)	8.3E-7 (8.2E-7)	9.6E-6 (9.2E-6)
12.	RHR—Containment shell and safety systems entering containment[c]	4.0E-7 (4.0 E-7)	19.8 (17.7)	3.9E-9 (3.9E-9)	7.7E-8 (7.9E-8)	1.5E-6 (1.4E-6)
14.	HELB—Containment instrumentation and control	3.8E-5 (3.8E-5)	11.3 (10.8)	1.1E-6 (1.0E-6)	1.3E-5 (1.2E-5)	1.4E-4 (1.3E-4)
16.	HELB—RBCCW[c]	2.0E-8 (2.0E-8)	16.8 (16.7)	2.7E-10 (2.6E-10)	4.6E-9 (4.3E-9)	7.7E-8 (7.2E-8)

a. Error factor = 95th percentile/median

b. Numbers in parentheses are from SAPPHIRE runs.

c. This event is presented because its containment failure impact is high, even though the core damage frequency impact ranking is low.

Table E-2. Quantification of dominant PWR pipe-break events inside containment.

	Pipe Break—Affected System(s)	Change in CDF Resulting from Pipe Break Event: Mean Frequency (events/rx-yr)	Error Factor[a]	5th Percentile (events/rx-yr)	Median (events/rx-yr)	95th Percentile (events/rx-yr)
9.	HELB—Containment instrumentation and control	7.5E-5 (7.5E-5)[b]	12.2 (12.3)	1.9E-6 (1.8E-6)	2.4E-5 (2.2E-5)	2.9E-4 (2.7E-4)
16.	MS or FW—Containment shell in free-standing containment[c]	1.4E-9 (1.4E-9)	15.0 (12.1)	2.0E-11 (4.6E-11)	3.7E-10 (4.3E-10)	6.0E-9 (5.2E-9)
17.	MS or FW—CCW[c]	1.0E-7 (1.0E-7)	16.8 (15.5)	1.4E-9 (1.3E-9)	2.3E-8 (2.2E-8)	3.9E-7 (3.4E-7)

a. Error factor = 95th percentile/median

b. Numbers in parentheses are from SAPPHIRE runs

c. This event is presented because its containment failure impact is high, even though the core damage frequency impact ranking is low.

Conclusions

The general conclusions reached in this program are:

1. No BWR SEP-III plants have leak-before-break (LBB) approval; all SEP-III PWR plants have LBB approval for their reactor coolant systems. One SEP-III plant has LBB approval for its surge line.

2. There have been few through-wall leaks of LWR large high-pressure piping inside containment. Therefore, the failure rates have a large uncertainty. There are no models which have been produced that are sophisticated enough to estimate variances in pipe break frequencies for different LWR materials, fabrication methods, repair methods, or stress improvement methods.

3. Most pipe break frequency estimates can be traced back to the same references, many of which are fairly old. The break frequencies in NUREG-1150 (1990), which has undergone fairly extensive reviews, were used for this study.

4. Only a small number of inspection, procedural, and physical modifications were required by the NRC for SEP-II plants. The average was slightly more than two changes per plant. No common locations or documented reasons for the modifications were determined.

5. Early SEP-III plants had pipe break protection and evaluations similar to SEP-II plants. Mid-timeframe SEP-III plants had more emphasis placed on their pipe break protection.

6. Later-timeframe SEP-III plants considered inside-containment pipe-break effects in a fashion similar to current criteria. All of these plants indicated that their evaluation of pipe breaks met the intent or satisfied RG 1.46. The inside-containment pipe-break protection in these plants appears to be the same as for SRP plants.

7. Our observations of two PWR and three BWR plants showed that while the RCS or PCS of these plants are all similar, the branch piping and electrical conduits are field routed in different manners, leading us to the conclusion that the field routing probably makes each plant unique in terms of the proximity of pipe breaks and potential targets.

8. The main physical barriers for pipe break protection are whip restraints, jet impingement shields, containment liners, and concrete walls (PWRs only).

9. The physical separation of components is much greater in PWRs than in the Mark I BWRs.

10. Based on all the possible field routing situations, we developed a list of potential concerns based on the systems that we observed in the plants that were visited.

11. Six BWR [breach of containment shell (from MS/FW, RHR, or recirculation piping), damage to CRD lines (from recirculation or RHR piping), damage to safety-related instrument and control systems (from any HELB)] and two PWR [damage to safety-related instrument and control systems (from any HELB) and breach of containment shell (from MW/FW piping)] sequences were ranked medium or high with regard to potential increase in CDF.

12. The CDF mean frequency changes for the BWR sequences ranked high or medium were on the order of 10^{-4} to 10^{-6} events/rx-yr. The CDF mean frequency change for the two PWR events was on the order of 10^{-4} events/rx-yr for one and 10^{-9} events/rx-yr for the other.

13. For loss of containment integrity caused by rupture of the PWR CCW and the BWR RBCCW systems initiated by a pipe break inside containment, with valve failure of a single isolation valve, the mean frequency was estimated to be on the order of 10^{-9} events/rx-yr.

14. A number of corrective actions are available to reduce the risk. Protective hardware and increased ISI are the recommended choices. In some cases, rerouting of electrical/pneumatic lines may be the best alternative.

15. We found that since the field routing of most of the lines is plant-specific, any corrective actions must also be plant-specific. This is consistent with the corrective actions for the SEP-II plants, for which the changes imposed by the NRC varied from plant-to-plant. Therefore, a plant-by-plant walkdown is recommend to decide what, if any, corrective actions are needed for each plant.

ACKNOWLEDGMENTS

The authors acknowledge the significant role played by Joel D. Page, the United States Nuclear Regulatory Commission Program Manager for Job Code W6362. Numerous utility contacts from the staffs of Portland General Electric, Tennessee Valley Authority, Commonwealth Edison, Carolina Power and Light, and Vermont Yankee Power Company assisted us in obtaining detailed information and conducted inside-containment plant tours. The NRC Program Managers and Resident Inspectors for these plants were also helpful in arranging and completing the plant visits. J. E. Edson assisted in preparation of Section 6.3.2 of the report, R. E. Carbiener assisted in preparation of Section 6.3.3, and N. B. Stockton assisted in preparation of Sections 6.3.3 and 6.3.4.

ACRONYMS

ADS	automatic depressurization system
AEC	Atomic Energy Commission
ANO	Arkansas Nuclear One
AOV	air operated valve
APGRMS	airborne particulate and gaseous radiation monitoring system
B&W	Babcock & Wilcox
BWR	boiling water reactor
CCW	closed cooling water
CDF	core damage frequency
CE	Combustion Engineering
CFR	Code of Federal Regulations
CIS	containment isolation system
CIV	containment isolation valve
CP	construction permit
CRD	control rod drive
CVCS	chemical and control volume system
dp	differential pressure
EF	error factor
EPRI	Electric Power Research Institute
EQ	equipment qualification
ESF	engineered safety feature
ESW	emergency service water
FSAR	final safety analysis report
FTOL	full-term operating license
FW	feedwater
GDC	General Design Criteria
GE	General Electric
GL	Generic Letter
GSI	Generic Safety Issue
HELB	high-energy line break
HPCI	high-pressure coolant injection
HPSI	high-pressure safety injection
HSW	heat sink welding
I&C	instrument and controls
IE	initiating event
IEEE	Institute of Electrical and Electronic Engineers
IGSCC	intergranular stress corrosion cracking
INEEL	Idaho National Engineering and Environmental Laboratory
IPE	individual plant examination
IPSAR	individual plant safety analysis report
ISHI	individual heat stress improvement
ISI	inservice inspection
LBB	leak before break
LOCA	loss-of-coolant accident
LPCI	low-pressure coolant injection
LPSI	low-pressure safety injection

LLNL	Lawrence Livermore National Laboratory
MK 1	Mark 1
MOV	motor-operated valve
MS	main steam
MSIP	mechanical stress improvement procedure
MWe	megawatt electric
NIS	nuclear instrument system
NPS	nominal pipe size
NRC	Nuclear Regulatory Commission
NRHX	non-regenerative heat exchanger
NSSS	nuclear steam system supplier
NUDOCS	Nuclear Document System (of the NRC)
OL	operating license
PCS	primary coolant system (of a BWR)
POL	provisional operating license
PORV	power operated relief valve
PRA	probabilistic risk assessment
psig	pounds per square inch (gage pressure)
PWR	pressurized water reactor
RBCCW	reactor building closed cooling water
RCIC	reactor core isolation cooling
RCP	reactor coolant pump
RCS	reactor coolant system (of a PWR)
RG	Regulatory Guide
RHR	residual heat removal
RPS	reactor protection system
RTD	resistance temperature detector
RWCU	reactor water cleanup
SEP	Systematic Evaluation Program
SER	safety evaluation report
SI	safety injection
SLCS	standby liquid control system
SONGS	San Onofre Nuclear Generating Station
SRP	Standard Review Plan
SST	stainless steel
SWS	service water system
TMI	Three Mile Island
UFSAR	updated final safety analysis report
W	Westinghouse Electric Corporation

Enhanced Prioritization of Generic Safety Issue 156-6.1 Pipe Break Effects on Systems and Components Inside Containment (Draft)

1. INTRODUCTION

The U. S. Nuclear Regulatory Commission (NRC) is currently assessing the need to review the 41 older nuclear power plant units referred to as the Systematic Evaluation Program Phase III (SEP-III) plants. Generic Safety Issue (GSI) 156-6.1 (R. Emrit, et al., 1993) deals with whether the effects of pipe break inside containment have been adequately addressed in these plants' designs. The NRC originally evaluated a majority of the SEP-III plants before they issued Regulatory Guide (RG) 1.46 in May 1973 (AEC, 1973b). Although the NRC reviewed these plants, there is a potential lack of uniformity in those reviews due to the absence of documented acceptance criteria. The NRC is now attempting to assess the impact of not having such criteria in place. The SEP-III plants are:

Nine Mile Point 1	Vermont Yankee
Robinson 2	Maine Yankee
Point Beach 1 & 2	Kewaunee
Monticello	Fort Calhoun
Dresden 3	Zion 1 & 2
Pilgrim	Browns Ferry 1 & 2
Quad Cities 1 & 2	Indian Point 2 & 3
Surry 1 & 2	Peach Bottom 2 & 3
Turkey Point 3 & 4	Prairie Island 1 &2
Oconee 1, 2, & 3	Duane Arnold
Cooper	Arkansas 1
Calvert Cliffs 1	D. C. Cook 1
Hatch 1	FitzPatrick
Three Mile Island 1	Brunswick 2
Trojan	Millstone 2.

The NRC's assessment involved an initial prioritization of the issue to determine whether the risk involved was sufficiently high to warrant assigning it as a Generic Safety Issue designated for a more detailed evaluation. The initial prioritization considered the current status of the SEP-III plants with regard to pipe break probabilities, probabilistic risk assessments, pipe break effects on the Core Damage Frequency (CDF) estimates, and the cost estimates for any potential corrective actions. The NRC staff performed an initial "draft" prioritization, but large uncertainties were recognized (for example, in the probability of various types of pipe failures, in the probability of subsequent safety-related system failures after pipe breaks, and in the cost estimates for any potential improvements to reduce the CDF), making the prioritization inappropriate for use. Therefore, the present effort seeks to enhance the existing "draft" prioritization of GSI 156-6.1, reducing the uncertainties as much as possible. A significant effort in gathering additional information was required to enhance the prioritization.

1.1 Background

In 1967, the Atomic Energy Commission (AEC) published the General Design Criteria (GDC) for comment and interim use. Until 1972, the AEC staff's implementation of the GDC required consideration of postulated pipe break effects inside containment; however, due to the lack of documented review criteria, AEC staff review positions were continually evolving.

Review uniformity was finally developed in the early 1970s initiated by an internal NRC communication from L. Rodgers to R. Fraley, "Safety Guides," dated November 9, 1972. In this letter, the NRC proposed a *Draft Safety Guide* entitled "Protection Against Pipe Whip Inside Containment". This draft contained one of

the first documentations of deterministic criteria that the AEC staff had been using for several years (to varying degrees) as guidelines for selecting the locations and orientations of postulated pipe breaks inside containment, and for identifying the measures that should be taken to protect safety-related systems and equipment from the dynamic effects of such breaks. Before they used these deterministic criteria, the staff used nondeterministic guidelines on a plant-specific basis. This *Draft Safety Guide* was subsequently revised and issued in May 1973 as RG 1.46 with the same title (AEC, 1973b). The AEC implemented the RG only on a forward-fit basis.

Regarding pipe break effects outside containment: in December 1972 and in January through July 1973, the AEC issued two generic letters (Giambusso, 1972 and O'Leary, 1973) to all licensees and Construction Permit (CP) or Operating License (OL) applicants; these are known as the "Giambusso" and "O'Leary" letters, respectively. These letters extended the pipe break concerns to outside containment, and provided deterministic criteria for break postulation and evaluation of the dynamic effects of postulated breaks. The letters requested that all recipients submit a report to the staff that summarized each plant-specific analysis of this issue. All operating reactor licensees and license applicants submitted the requested analyses in separate correspondence or updated the safety analysis report for the proposed plant to include the analysis. In November 1975, after the AEC had reorganized into the Nuclear Regulatory Commission, the NRC staff issued *Standard Review Plan* (SRP) sections 3.6.1 and 3.6.2 (NRC 1975) that slightly revised the two generic letters discussed above. Thus, after 1975, the specific structural and environmental effects of pipe whip, jet impingement, flooding, etc. on systems and components relied on for safe reactor shutdown were considered.

The NRC has provided requirements to the industry regarding pipe breaks outside of containment by issuing the above-mentioned "Giambusso" and "O'Leary" letters. Since these requirements apply to all the affected plants, pipe breaks outside containment are considered a compliance issue. Therefore, the concern of pipe breaks outside containment for the 41 SEP-III units is not considered a part of this issue; only pipe breaks inside containment will be considered.

As part of its plant-specific review between 1975 and 1981, the NRC staff used the guidelines in RG 1.46 for postulated pipe breaks inside containment and SRP sections 3.6.1 and 3.6.2 for evaluating postulated pipe breaks outside containment. In July 1981, the NRC revised SRP sections 3.6.1 and 3.6.2 (NRC 1981) to be applicable to both outside and inside containment, eliminating the need for further use of RG 1.46. Finally, in June 1987, the NRC eliminated all dynamic and environmental effects resulting from arbitrary intermediate pipe ruptures. This was accomplished through Generic Letter 87-11 (USNRC 1987a).

Between 1977 and 1987, the NRC Systematic Evaluation Program (SEP) revisited the issue of pipe breaks inside and outside containment. The objective of the SEP was to determine to what extent the earlier ten plants (i.e., SEP-II) met the licensing criteria in existence at that time. These ten plants included:

Palisades	R. E. Ginna
Oyster Creek	Dresden 2
Millstone 1	Yankee Rowe
Haddam Neck	LaCrosse
Big Rock Point	SONGS 1

This objective was later interpreted to ensure that the SEP also provided safety assessments adequate for conversion of provisional operating licenses (POLs) to full-term operating licenses (FTOLs). As a result of these pipe break reviews, the plants were required to perform engineering evaluations, technical specification or procedural changes, and physical modifications both inside and outside containment. Regarding inside containment modifications: of the two SEP-II plants evaluated during the development of the "draft" prioritization (one BWR and one PWR), the BWR was required to

complete installation of a radiation monitoring system and the PWR was required to perform augmented inservice inspection (ISI) and modify steam generator blowdown piping supports. This indicates that there was some variation of implementation associated with the original NRC reviews of these early plants for protection against the effects of pipe breaks inside and outside containment.

The environment created by pipe breaks can have a substantial effect on safety-related electrical equipment. For this reason, the degree to which this electrical equipment has been environmentally qualified can affect the overall impact on safety of postulated pipe breaks. As with the above-described evolution of uniform pipe break criteria, electrical systems design criteria were also in a state of development. Before 1974, electrical system designs were generally reviewed in accordance with the guidelines provided in IEEE-279 (IEEE 1968 and IEEE 1971); however, significant variations in interpretations of that document resulted in substantial design differences in plants. In some cases, true physical separation of wiring to redundant components was not necessarily accomplished. In 1974, RG 1.75 (AEC 1974) was published, clarifying the requirements.

1.2 NRC Staff Draft Prioritization

Based on the information above and estimated frequencies of occurrence in each step of possible accident sequences that would result in a reasonably conservative estimate of impact on overall plant safety, the staff performed an initial "draft" prioritization of this issue. However, because of large uncertainties in certain parts of the sequences being considered, the resulting estimates also contained very large uncertainties. Particularly, these uncertainties concern the probability of various types of pipe failures, and the probabilities that these pipe failures would cause subsequent failures (e.g., from pipe whip, jet impingement) of important equipment or structures. The NRC also determined that more accurate estimates of the costs associated with any potential improvements to reduce the CDF would help establish a more well-defined prioritization. For this reason, the NRC decided that additional research should be performed.

2. PIPE BREAK FREQUENCY ESTIMATES

2.1 Review of Available Pipe Degradation and Failure Data

Several of the high-energy lines inside containments have apparently experienced no degradation. However, some lines have experienced cracking or wall thinning. In a few cases, significant leaks have occurred, but no major breaks that damaged critical equipment. Instances of large, high-energy line pipe leaks inside containments of U.S. nuclear power plants, the major degradation mechanisms at the locations, and numbers of leaks in piping of diameter greater than 51 mm (2 in.) are listed in Table 2-1 (Shah et al. 1998, Poloski et al. 1999).

Extensive cracking has been found in most BWR recirculation systems (133 by 1979, 319 by 1983, and more than 1,000 by 1990 have been reported), although only a small percentage actually developed into leaks. An estimated 6 to 8% of BWR susceptible pipe welds have experienced cracking. The initial instances of leakage were on smaller lines [less than 8 in. (203 mm)] first reported at Dresden Unit 1 in 1965, and at a safe end location in the Duane Arnold plant in 1980. Later, in 1982, a slight leak occurred on a 28-in. (711-mm) safe end at Nine Mile Point Unit 1 during a hydrotest, showing that larger recirculation piping was also susceptible to leakage from intergranular stress corrosion cracking (IGSCC). A few other through-wall cracks were detected when repair efforts such as weld overlays were undertaken. None of the cracks that have been detected in BWR feedwater nozzles from thermal fatigue propagated through the wall for a leak to occur. Both the recirculation line and feedwater nozzle problems have been the subject of NRC NUREGs, Bulletins, Generic Letters, and Information Notices (NRC 1980c, 1982c, 1984b and c, 1988a), and are being managed by NRC and industry programs.

While many Westinghouse and a few Combustion Engineering plant steam generator feedwater nozzle-to-piping weld zones have experienced cracking, actual failures (leaks) have been relatively few: D. C. Cook Unit 2 (Westinghouse PWR) in 1979, Maine Yankee (Combustion Engineering PWR) in 1983, and Sequoyah Unit 1 (Westinghouse PWR) in 1992. The Maine Yankee incident was caused by a water hammer and occurred at a location weakened by fatigue cracking. Extensive erosion-corrosion wall thinning of piping inside containment was found on the Trojan plant (Westinghouse PWR), but no leaks have occurred. A break in the feedwater line at the inside of the containment penetration occurred at the Indian Point plant (Westinghouse PWR) in 1973. A major leak developed and the penetration was damaged. Leaks have developed in the makeup/high pressure injection lines of two B&W plants, one in the early 1980s and one in 1997. A safety injection line developed a leak from thermal fatigue at Farley Unit 2 (Westinghouse PWR) in

Table 2-1. Location, mechanism, and number of leaks in piping greater than 51 mm (2 in.) at U.S. nuclear power plants inside containment.

Location	Degradation mechanism	Leaks
BWR recirculation piping	Intergranular stress corrosion cracking (IGSCC)	34
BWR feedwater nozzles	Thermal fatigue	0
PWR feedwater nozzles	Thermal fatigue, water hammer, erosion-corrosion	3
PWR feedwater piping	Water hammer, erosion-corrosion	1
PWR makeup/high pressure injection	Thermal fatigue	2
PWR safety injection piping	Thermal fatigue	1

1988, after 6 years of operation. A similar leak occurred at a Belgian plant. These instances of degradation have been the subject of NRC Bulletins and Information Notices (NRC 1979c, 1980c, 1984b, 1987b, 1989, 1991b, 1993), and are being managed by industry and NRC programs.

The degradation mechanisms that caused the small number of failures are being managed by industry programs with NRC oversight. Therefore, the present failure rates are expected to be no higher than those that would be calculated using the failures to date. Consequently, the failure probabilities used in recent PRAs are relied on in Section 2.3 to give failure probabilities. These appear consistent with the failure data to date.

2.2 Leak-Before-Break Status for SEP-III Plants

Leak-before-break (LBB) technology was approved by an amendment to GDC-4 of Appendix A to 10 CFR Part 50, and became effective November 27, 1987. The technical procedures and criteria for LBB are defined in NUREG/CR-1061, Volume 3 (NRC 1984b). The basic assumption is that if there is major degradation in the pipe wall, a detectable leak will develop for certain piping under certain loads, and the plant can be shut down before a catastrophic failure occurs.

Although the NRC has not approved LBB for any BWR plants, all PWR SEP-III plants have LBB approved for their main coolant loops. These have been primarily connected with the resolution of Unresolved Safety Issue A-2, which dealt with asymmetric blowdown loads resulting from double-ended pipe breaks. However, licensees may use LBB as justification for the removal of primary loop supports such as part of snubber reduction programs, and the removal of pipe whip restraints and jet impingement barriers. One SEP-III plant (Prairie Island Unit 1) has had LBB approved for its surge line. This was in conjunction with satisfying the requirements of Bulletin 88-11. The LBB status of SEP-III plants as of 1995 is summarized in Table 2-2.

In most cases, the NRC reviewed generic requests and granted approvals for Westinghouse (Generic Letter 84-04; Eisenhut 1984), Combustion Engineering (Richardson 1990), and Babcock & Wilcox (Crutchfield 1985) plants. Generic letter 84-04 also included the Ft. Calhoun plant (Combustion Engineering design) because Ft. Calhoun has stainless steel primary coolant piping as do Westinghouse plants, rather than carbon steel piping as do all other Combustion Engineering plants. Not all Westinghouse plants were included in Generic Letter 84-04. Fifteen Westinghouse plants, of which 10 were SEP-III plants, are listed in the Generic Letter. Although Generic Letter 84-04 accepted the technical basis for LBB, it stipulated that plants still had to demonstrate that an adequate leak detection system was operational, that is, that at least one leakage detection system must be operable with a sensitivity capable of detecting 1 gal/min (gpm) (3.8 l/m) in 4 hr. The guidelines for leak detection systems were published in RG 1.45 (AEC 1973a). Edison's letters (1988 and 1990) are examples of NRC approval of licensee submittals for a leak detection system that is sufficient to detect leakage from a postulated circumferential throughwall flaw using RG 1.45 (with the exception that the seismic qualification of the airborne particulate radiation monitor is not necessary).

Crutchfield's letter (1985) is the NRC generic response to a B&W Owners Group submittal, and Richardson's letter (1990) is the generic response to the Combustion Engineering Owners Group. Although there were three main generic approvals, some plants applied for and were granted LBB individually (Edison 1987; Brinkman 1989; Gamberoni 1992; Chan 1988; Perkins 1988), because not all Westinghouse plants were included in Generic letter 84-04. For Indian Point 3, the NRC stated (Varga 1986) that the licensee had provided analyses satisfying the requirements of the proposed rule for modification of GDC-4 of Appendix A to 10CFR50, but since the rule had not been issued (it was issued the following year), they took no action. The licensee considers that after the change to the CFR in November 1987, the Varga letter (1986) effectively approves LBB for Indian Point 3.

Table 2-2. Leak-before-break status of SEP-III plants (1995).

Plant	NSSS vendor	System
Nine Mile Point-1	GE	None
Robinson-2	Westinghouse	RCS[a]
Point Beach-1/2	Westinghouse	RCS[a]
Monticello	GE	None
Dresden-3	GE	None
Pilgrim	GE	None
Quad Cities-1/2	GE	None
Surry-1/2	Westinghouse	RCS[a]
Turkey Point-3/4	Westinghouse	RCS[a,i]
Oconee-1,2,3	B&W	RCS[c]
Vermont Yankee	GE	None
Maine Yankee	Combustion Engineering	RCS[b]
Kewaunee	Westinghouse	RCS[l]
Fort Calhoun	Combustion Engineering	RCS[a]
Zion-1/2	Westinghouse	RCS[a]
Browns Ferry-1/2	GE	None
Indian Point-2/3	Westinghouse	RCS (unit 2,[f] unit 3[a])
Peach Bottom-2/3	GE	None
Prairie Island-1/2	Westinghouse	RCS,[h] surge line (unit 1)[g]
Duane Arnold	GE	None
Cooper	GE	None
Arkansas Nuclear One-1	B&W	RCS[c]
Calvert Cliffs-1	Combustion Engineering	RCS[b]
D. C. Cook-1	Westinghouse	RCS[a]
Hatch-1	GE	None
Fitzpatrick	GE	None
TMI-1	B&W	RCS[e]
Brunswick-2	GE	None
Trojan	Westinghouse	RCS[j]
Millstone-2	Combustion Engineering	RCS[b]

a. Eisenhut, 1984
b. Richardson, 1990
c. Crutchfield, 1985
d. Edison, 1990
e. Edison, 1987
f. Brinkman, 1989
g. Gamberoni, 1992
h Dilanni, 1986
i. Edison, 1988
j. Chan, 1988
k. Varga, 1986
l. Perkins, 1988

2.3 Estimation of Pipe Failure Rates Applicable to SEP-III Plants

Most piping failure frequencies have been based on the basic elemental method, that is, simply dividing the number of failures by the number of years of experience. Recently, the Thomas method has gained some popularity in estimating pipe failure frequencies. This method takes into account some pipe parameters such as thickness, length, and diameter. These data are fed into a "black box," which provides a failure frequency. However, the "black box" is designed based on mostly nonnuclear industry experience and data. Although we know of no pipe break frequencies for commercial nuclear plant piping that were estimated using the Thomas method (Thomas 1981), it has been used for break frequencies in PRAs conducted for Savannah River and INEEL (Advanced Test Reactor) reactors.

Most recent PRA reports base their failure frequencies on previous PRAs, and the previous PRAs mainly use three basic references: WASH-1400 (NRC 1975), EPRI NP-438 (Basin and Burns 1977), and PLG-0500 (Pickard, Lowe, and Garrick, Inc. 1989). However, data from other references also have been used in PRAs (Oswald et al. 1989; Kolaczkowski et al. 1989). The PRA reports listed in Table 2-3 were reviewed. The pipe failure frequency in the WASH-1400 study was based on pipe segments, that is, the section between welds. The failure rates (section failure/hr) are based on nonnuclear industry experience and do not consider failure mechanisms. Several plant PRAs either simply used the same failure frequencies given in WASH-1400 or adjusted the WASH-1400 failure rates based on plant layout. EPRI NP-438 was based on the experience of 55 nuclear plants that were operational in 1977. It considered approximately 250 years of nuclear power plant operating experience covering a 16-year time-frame, starting in August 1969.

Table 2-3. List of PRA reports reviewed.

Plant	Reactor Type	PRA basis
Beaver Valley	PWR	PLG-0500
Brunswick	BWR	EGG-EA-5887
Callaway	PWR	WASH-1400
Comanche Peak	PWR	PLG-0500
Diablo Canyon	PWR	PLG-0500
FitzPatrick	BWR	NUREG/CR-4550, Table 4.3-3
Limerick	BWR	EPRI NP-438
Monticello	BWR	EPRI NP-438
Hatch	BWR	EPRI NP-438
Shoreham	BWR	EPRI NP-438

The Lawrence Livermore National Laboratory evaluated the probability of pipe break failures for PWR and BWR plants (LLNL 1981, 1984a, 1984b, 1985-86; Lo et al. 1989). The failure frequency of a single weld was estimated from a fatigue failure using the PRAISE computer code. The study did not take into account other failure mechanisms. Kafka and Adrian (1989) estimated failure frequencies for large piping based on a total of 4,000 years of reactor experience. They also made another estimate using the Biblis B (German) plant, considering the failure frequency of the weld between the pressure vessel nozzle and the hot leg pipe. The analysis included structural modeling of the entire PWR primary loop, a nonlinear soil structure interaction model, and a detailed investigation of the entire load history via system analysis up to the estimation of an initial crack distribution inherent in welds. The statistical and stochastic properties of all important loading and material parameters were taken into account, but the effect of IGSCC was ignored. Jamali (1990) prepared a more recent study using pipe failure data from operating U. S. commercial power plants. The author reported that the methodology accounts for factors that are postulated to significantly affect the values of the failure rates, for example, aging, and are also quantifiable from the database.

Other sources reviewed, but from which no pipe-break frequency information was found, were NUREG-1061 (NRC 1984b), NUREG-0313 Revision 2 (Hazleton and Koo 1988), and Generic Letter 88-01 (NRC 1988a).

The mean pipe-break frequency estimates (events/yr) from the references reviewed are listed in Tables 2-4 and 2-6 for PWR and BWR plants, respectively. All values are mean except for those based on WASH-1400, where they represent median values. The tables include WASH-1400 (NRC 1975a), NUREG-1150, and Poloski et al. (1999). The latter is a more recent study which considered piping history through 1997. It recommended frequencies about an order of magnitude below WASH-1400 and NUREG-1150. The study is very recent and has not received widespread review.

Many of the reports do not identify any uncertainty bounds. For failure probabilities less than 10^{-3} events/yr, the uncertainty bounds are generally considered to be an order of magnitude. Uncertainty ranges from the sources that included pipe break uncertainties are listed in Tables 2-5 and 2-7 for PWR and BWR plants, respectively. These include WASH-1400 (NRC 1975a), NUREG-1150, and Poloski et al. (1999).

Estimates of mean secondary piping rupture frequencies for PWR plants (events/yr) are listed in Table 2-8. The failure frequency for the Callaway plant was based on the ratio of the pipe section lengths for that plant compared to the section lengths assumed in WASH-1400.

Although the initial approach was to use the median values of the studies evaluated, it was decided to use initiating event values from NUREG-1150 since those values are the most accepted and extensively used by the NRC. These failure frequencies are listed in Table 2-9. There has been less failure information generated for main steam and feedwater piping than for reactor coolant systems. Based on the limited data in Table 2-8, a mean failure probability value of 3×10^{-4} events/yr is estimated, which is about the same as for the primary system large break frequency. Therefore, the PWR large break failure frequency will also be assumed for the large secondary piping. Since there has been more feedwater system degradation inside containment than main steam system degradation, it is assumed that 80% of the frequency comes from the feedwater system and 20% from the main steam system.

Although the failure studies did not consider the age of the piping, the failure probability is undoubtedly a function of the pipe age, since one of the major degradation mechanisms, fatigue, accumulates with time. Shah et al. (1998, Figure 3.6b) show a statistically increasing trend of leak events caused by thermal fatigue with plant years of operation. Fatigue degradation will be greatest for plants in the life extension phase, presumably 40 to 60 years, for which no nuclear plant failure data can be generated at this time. Another consideration is replacement or repaired pipe. Recirculation lines in all SEP-III BWR plants have been repaired or replaced. We believe that the values chosen are conservative. The mean probabilities are factors of 5 and 10 greater than the values in the study performed by Poloski et al. (1999) for BWR and PWR RCS piping, respectively.

Table 2-4. Failure frequencies (events/yr) for PWR plant primary system piping.

Relative Pipe Size[a]						
Very Large	Large	Medium	Small	Very Small	Other	Source
2.7E-7	2.0E-4	4.7E-4	5.8E-3	—	—	Diablo Canyon PRA
—	—	—	—	1.2E-2	—	Comanche Peak PRA
—	5.0E-4	1.0E-3	1.0E-3	1.3E-2	—	Callaway PRA
2.7E-7	2.0E-4	4.7E-4	5.6E-3	—	—	Beaver Valley PRA[b]
—	—	—	1.8E-2	—	—	Beaver Valley PRA[c]
—	1.0E-4	—	—	—	—	Kafka and Adrian 1989[d]
—	—	—	—	—	5.0E-6	Kafka and Adrian 1989[e]
—	1.4E-4	3.2E-4	1.0E-3	—	—	Jamali 1990
—	3E-4	8E-4	3E-3	—	—	WASH-1400
—	5E-4	1E-3	1E-3	—	—	NUREG-1150[f]
—	4E-6	3E-5	4E-4	—	—	Poloski et al. 1999

a. Very large break >> 6 in. (152 mm) (for example, reactor vessel)
Large break > 6 in. (152 mm)
Medium 4 < break ≤ 6 in. (102 < break ≤ 152 mm)
Small 2 < break ≤ 4 in. (51 < break ≤ 102 mm)
Very small break ≤ 2 in. (≤ 51 mm)
Other single weld.

b. Isolatable portions.

c. Non-isolatable portions.

d. Based on 4,000 plant years of experience.

e. Based on large-diameter pipe for Biblis B.

f. *Analysis of Core Damage Frequency: Surry Unit 1 Internal Events*, NUREG/CR-4550, Vol. 3, Rev. 1, Part 1, Table 4-9.2, page 4.9-4.

Table 2-5. Failure frequency uncertainties (events/yr) for PWR plant primary system piping.

Pipe size[a]	Pipe Break Probability (events/yr) Low	Mean	High	Source
Very large	7.1E-9	2.7E-7	8.1E-7	Diablo Canyon PRA
Large	6.7E-6	2.0E-4	5.7E-4	Diablo Canyon PRA
	5.0E-5	5.0E-4	5.0E-3	Callaway PRA
	1.2E-5	1.4E-4	7.0E-4	Kafka and Adrian 1989[b]
	1E-5	3E-4	1E-3	WASH-1400
	1.9E-5	5E-4	1.9E-3	NUREG-1150[c]
	1E-7	4E-6	1E-5	Poloski et al. 1999
Medium	1.9E-5	4.7E-4	1.4E-3	Diablo Canyon PRA
	1.0E-4	1.0E-3	1.0E-2	Callaway PRA
	2.8E-5	3.2E-4	1.6E-3	Kafka and Adrian 1989[b]
	3E-5	8E-4	3E-3	WASH-1400
	3.8E-5	1E-3	3.8E-3	NUREG-1150[c]
	1E-6	3E-5	1E-4	Poloski et al. 1999
Small	1.1E-4	5.8E-3	1.5E-2	Diablo Canyon PRA
	1.0E-4	1.0E-3	1.0E-2	Callaway PRA
	8.3E-5	1.0E-3	5.0E-3	Kafka and Adrian 1989[b]
	1E-4	3E-3	1E-2	WASH-1400
	3.8E-5	1E-3	3.8E-3	NUREG-1150[c]
	1E-4	4E-4	1E-3	Poloski et al. 1999

a. Very large break >> 6 in. (152 mm) (for example, reactor vessel)
Large break > 6 in. (152 mm)
Medium 4 < break ≤ 6 in. (102 < break ≤ 152 mm)
Small 2 < break ≤ 4 in. (51 < break ≤ 102 mm)

b. Based on large-diameter pipe for Biblis B.

c. *Analysis of Core Damage Frequency: Surry Unit 1 Internal Events*, NUREG/CR-4550, Vol. 3, Rev. 1, Part 1, Table 4-9.2, page 4.9-4

Table 2-6. Failure frequencies (events/yr) for BWR plant piping.

Relative Pipe Size[a]						
Very Large	Large	Medium	Small	Very Small	Other	Source
—	1.0E-4	3.0E-4	3.0E-3	3.0E-2	—	FitzPatrick PRA
3.0E-7	7.0E-4	3.0E-3	8.0E-3	—	—	Shoreham PRA[b]
—	7.0E-3	3.0E-2	2.0E-2	—	—	EPRI NP-438[b]
—	4.0E-4	2.0E-3	1.0E-2	—	—	Limerick PRA
—	7.0E-4	3.0E-3	8.0E-3	—	—	Monticello PRA
—	2.6E-4	7.6E-4	2.3E-3	—	—	Hatch PRA
1.8E-8	3.0E-4	3.0E-3	3.0E-2	—	—	Brunswick PRA
—	3.0E-4	2.8E-4	1.8E-3	—	—	Jamali 1990
—	—	—	—	—	1.5E-10	Lo 1989[c]
—	3E-4	8E-4	3E-3	—	—	WASH-1400
—	1E-4	3E-4	3E-3	—	—	NUREG-1150[d]
—	2E-5	3E-5	4E-4	—	—	Poloski et al. 1999

a. Very large break >> 6 in. (152 mm) (for example, reactor vessel)
Large break > 6 in. (> 152 mm)
Medium 4 < break ≤ 6 in. (102 < break ≤ 152 mm)
Small 2 < break ≤ 4 in. (51 < break ≤ 102 mm)
Very small break ≤ 2 in. (51 mm).

b. Large break > 4 in. (> 102 mm)
Medium 1 < break < 4 in. (25 < break < 102 mm)
Small break < 1 in. (25 mm).

c. Single weld in recirculation bypass line.

d. *Analysis of Core Damage Frequency: Peach Bottom Unit 2 Internal Events*, NUREG/CR-4550, Vol. 4, Rev. 1, Part 1, August 1989, Table 4.9-1, page 4.9-94.

Table 2-7. Failure frequency uncertainties (events/yr) for BWR plant piping.

	Pipe Break Probability			
Pipe Size	Low	Mean	High	Source
Large	1.0E-5	1.0E-4	1.0E-3	FitzPatrick PRA
	2.5E-5	3.0E-4	1.5E-3	Lo 1989[b]
	1E-5	3E-4	1E-3	WASH-1400
	3.8E-6	1E-4	3.8E-4	NUREG-1150[c]
	9E-7	2E-5	9E-5	Poloski et al. 1999
Medium	3.0E-5	3.0E-4	3.0E-3	FitzPatrick PRA
	2.3E-5	2.8E-4	1.4E-3	Lo 1989[b]
	3E-5	8E-4	3E-3	WASH-1400
	1.1E-5	3E-4	1.1E-3	NUREG-1150[c]
	9E-7	3E-5	9E-5	Poloski et al. 1999
Small	3.0E-4	3.0E-3	3.0E-2	FitzPatrick PRA
	1.5E-4	1.8E-3	9.0E-3	Lo 1989[b]
	1E-4	3E-3	1E-2	WASH-1400
	1.1E-5	3E-3	1.1E-3	NUREG-1150[c]
	1E-4	4E-4	1E-3	Poloski et al. 1999

a. Large break > 6 in. (> 152 mm)
Medium 4 < break ≤ 6 in. (102 < break ≤ 152 mm)
Small 2 < break ≤ 4 in. (51 < break ≤ 102 mm)

b. Single weld in recirculation bypass line.

c. *Analysis of Core Damage Frequency: Peach Bottom Unit 2 Internal Events*, NUREG/CR-4550, Vol. 4, Rev. 1, Part I, August 1989, Table 4.9-1, page 4.9-94.

Table 2-8. Failure frequencies (events/yr) for PWR plant secondary system piping inside containment.

	Break Location	
Steam Line	Feedwater Line	Source
4.6E-4	—	Beaver Valley PRA
8.7E-5	2.3E-5	Callaway PRA
4.6E-4	—	Diablo Canyon PRA

Table 2-9. Failure frequency recommendations (events/yr) for piping inside containment (low/mean/high).

Break location	Break Size [a]		
	Large	Medium	Small
PWR primary	1.9E-5/5E-4/1.9E-3	3.8E-5/1E-3/3.8E-3	3.8E-5/1E-3/3.8E-3
BWR	3.8E-6/1E-4/3.8E-4	1.1E-5/3E-4/1.1E-3	1.1E-5/3E-3/1.1E-3
PWR main steam and feedwater	Same as PWR primary break frequency (20% main steam system contribution, and 80% feedwater system contribution).		

a. Large break > 6 in. (152 mm)
Medium 4 < break ≤ 6 in. (102 < break ≤ 152 mm)
Small 2 < break ≤ 4 in. (51 < break ≤ 102 mm).

3. REVIEW OF UPDATED FINAL SAFETY ANALYSIS REPORTS AND RELATED SAFETY EVALUATION REPORTS

An important aspect of this research program was to obtain information regarding the design efforts made by plant licensees to mitigate the effects of postulated pipe breaks inside containment. Information was gathered for three groups of plants. These are: the SEP-II plants (the 10 earliest SEP plants), the SEP-III plants, and selected non-SEP plants of more recent licensing vintage. Since the SEP-II plants were subjected to a more recent (early 1980s) NRC evaluation of inside containment pipe break design, any information regarding additional analyses and/or plant modifications that might have been required would be useful for comparison to what was done on the SEP-III plants. The more recently licensed (non-SEP) plants were reviewed since their pipe break designs had been evaluated by the NRC with uniform acceptance criteria in place.

All of the review results are based on readily available information. If a specific design provision or consideration was not addressed in a document, our review could not comment on that missing item. Because most of the design documentation generated for the SEP-III plants was dated in the late 1960s and early 1970s, access to these documents was not always easily gained. Some documents were not obtained. In the cases where we could not readily locate a document [e.g., a Safety Evaluation Report (SER) about a plant's original Final Safety Analysis Report (FSAR)], we pursued other avenues in an effort to obtain at least minimal input. When we faced significant information gaps, our efforts included (although infrequently) telephone conversations with either the licensee or the nuclear steam supply system (NSSS) vendor to ask very specific questions. Since the object of this project was to obtain information that would enhance the prioritization of GSI 156-6.1, the work scope did not include verification of design commitments or the status of current plant evaluations regarding pipe breaks inside containment. Our reviews were necessarily based on the information which we could readily obtain.

The Giambusso and O'Leary letters specifically required the applicable BWR and PWR plants to perform pipe break evaluations for high-energy piping outside containment. However, BWR Mark I plants are generally considered to have two containments, a primary and a secondary containment. As applied to the BWR Mark I plants, the primary containment is defined as the drywell shell and torus while the secondary containment is the reactor building that encloses the drywell and other selected equipment. Therefore, to ensure that this review effort correctly addressed the proper BWR piping, we found it necessary to understand the clear definition of "outside containment" as it was intended by the Giambusso and O'Leary letters and how it was applied to the SEP-III BWR plants. Most of the NRC-generated SERs or the licensee-generated Updated Final Safety Analysis Reports (UFSARs) reviewed provided the necessary clarification. However, documentation for three BWR units (Vermont Yankee and Browns Ferry 1 and 2) lacked the proper clarification. A scheduled plant visit (as discussed in Section 3.4 below) or a brief telephone conversation provided the needed clarification for these three units. As uniformly applied by all of the SEP-III BWR plants, the Giambusso and O'Leary letters required a pipe break evaluation of the piping outside of the primary containment. The result was that only moderate- and high-energy piping inside the primary containment (drywell) had to be considered for this task.

Finally, an important aspect of the mitigation of inside-containment pipe-break effects is the functionality of the required safety-related equipment. The project work scope did not include addressing the effects of pipe breaks at specific locations or the survivability of specific equipment when subjected to pipe whip or jet impingement loading. However, information on generic concerns such as post-pipe break environment or flooding were addressed. The environmental qualification of safety-related electrical equipment for the SEP-III plants was

addressed by the NRC through IE Bulletin 79-01B (NRC 1980a) for Class 1E equipment and Generic Letter 82-33 (NRC 1982a) for instrumentation to comply with RG 1.97 criteria (NRC 1980b). These two documents required all applicable BWR and PWR plants to provide the NRC with sufficient documentation to justify the functionality of all systems required to mitigate the consequences of inside containment pipe break. Once completed, this NRC review process reaffirmed, within the reasonable limits of backfitting, that each plant has Class 1E equipment and instrumentation capable of properly functioning in post-accident conditions. Consideration of flooding effects inside containment due to high-energy pipe breaks or spray from high or moderate-energy piping was also handled by the NRC in a generic fashion for the SEP-III plants. The resolution of Unresolved Safety Issue A-17 (NRC 1989) included implementing Generic Letter 88-20 (NRC 1988b) that established the Individual Plant Examination (IPE) process. These system interaction concerns included an assessment of internal flooding and other forms of water intrusion, including spraying, dripping, and splashing. Therefore, the proper completion of the IPE review process should also reaffirm that plant safety-related equipment is indeed capable of performing their intended functions during post-accident flooding conditions.

3.1 Review of SEP-II UFSARs and Related SERs

The NRC initiated the SEP in February 1977 to reconfirm and document the safety of older operating nuclear plants' designs. The NRC SEP-II effort revisited the issue of pipe breaks inside containment and their related effects for those ten older nuclear plants. The specific SEP-II topics related to pipe breaks inside containment were Topic III-4.C (internally generated missiles) and Topic III-5.A (effects of pipe break on structures, systems, and components inside containment). The SEP-II review also provided safety assessments adequate for conversion of these plants' provisional operating licenses to full-term operating licenses.

The reason we reviewed the SEP-II plants' UFSARs and any related SERs was to understand the changes that each plant was required to make to adequately satisfy the NRC's SEP-II review. Although the SEP-II plants were designed before the SEP-III plants, any required changes made by the SEP-II plants might be directly applicable to the SEP-III plants.

3.1.1 Information Gathering Process

The NRC's Nuclear Document System (NUDOCS) was used as one of the sources of information to complete this task. NUDOCS allows database searches to be made on documents received and issued by the NRC. Key word or phrase searches, date searches, report searches, and author searches can be performed. An important limitation is that NUDOCS is relatively complete only for docketed material dating back to the 1979 or 1980 timeframe. It does not necessarily contain documentation dated early than 1980.

The searches for the UFSARs simply involved locating the microfiche that contained the initial UFSARs and their yearly updates. The Idaho National Engineering and Environmental Laboratory (INEEL) maintains a copy of the NUDOCS microfiche files. Hard copies of all UFSARs are not maintained at the INEEL. All updates were located, from the initial 1982 UFSAR submittal to the latest available microfiche update (typically the 1994 update). Most of the UFSARs reviewed did not follow the format of RG 1.70 (NRC 1978), but duplicated the plant's initial FSAR format. This meant that information of interest could be located virtually anywhere in the document, which increased the time required for the review effort.

Based on experience gained from reviewing an initial sample set of UFSARs, we decided to limit the review of SEP-II UFSARs to a small sample to first confirm whether they could be expected to provide any significant information relevant to GSI 156-6.1. Two of the ten SEP-II UFSARs were reviewed. As expected, these two UFSARs contained very little substance.

Table 3-1 shows the pertinent information obtained from this review effort.

3.1.2 Results From IPSAR NUREGs

The SEP-II UFSARs referenced the Integrated Plant Safety Assessment Report (IPSAR) NUREGs (NRC 1982b; NRC 1983a through 1983g; NRC 1984a; and NRC 1986) that specifically dealt with the NRC's entire SEP-II review. These NUREGs referenced and summarized both the licensee's submittals and the NRC's evaluations. Additional NUDOCS searches located many of the SERs referenced in the IPSAR NUREGs; however, most did not contain any substantial information beyond that contained in the NUREGs.

Table 3-2 summarizes the results obtained from the IPSAR NUREGs for SEP-II Topics III-4.C and III-5.A. All of the SEP-II plants were required to perform some form of engineering evaluation in order to satisfactorily address each topic and demonstrate adequate safety to the NRC staff. A typical evaluation consisted of (1) defining a pipe break location, (2) determining the consequences resulting from pipe whip, jet spray, impingement, or other related pipe break effects, and (3) determining if the plant operators could still bring the plant to a safe operating condition using alternate systems, redundant systems, or other means. As a result of these pipe break effects reviews, two SEP-II plants (Yankee Rowe and Haddam Neck) were required to make inspection changes, one plant (Palisades) was required to make Technical Specification changes, two plants (Yankee Rowe and LaCrosse) were required to make procedural changes, and six SEP-II plants (Yankee Rowe, LaCrosse, Oyster Creek, Ginna, Haddam Neck, and Palisades) were required to make physical modifications. Table 3-3 provides additional specific information on the plant changes resulting from the SEP-II review.

The Haddam Neck plant provided unique information regarding the resolution of concerns over pipe breaks inside containment. The Haddam Neck licensee committed (Wang 1993) to several physical modifications to improve the reliability of the auxiliary feedwater system and decrease the reliance on feed-and-bleed. The unique perspective to these modifications is that all of these changes were made outside containment. The modifications consisted of (1) installing a new motor-driven auxiliary feedwater pump (in addition to the existing steam-driven turbine pumps) outside the turbine pump enclosure, powered by emergency onsite (diesel bus) power, (2) adding more auxiliary feedwater piping that discharges from the motor-driven pump and connects to the existing auxiliary feedwater piping in the turbine pump enclosure, (3) dedicating the demineralized water storage tank to the auxiliary feedwater system, and (4) housing the electric auxiliary feedwater pump, the automatic initiation support skids, and some of the additional auxiliary feedwater piping and valves in a new seismically designed enclosure.

We need to clarify that the NRC required the SEP-II plants to evaluate the effects of internally generated missiles both inside and outside containment (Topic III-4.C). Two of the SEP-II plants (Ginna and Haddam Neck) had Topic III-4.C addressed specifically in their IPSAR NUREGs. Only Ginna had a modification requirement (inside containment) resulting from this SEP-II topic. The remainder of the SEP-II plants were evaluated and no changes were required. Each of the NUREGs referenced NRC letters dealing with the evaluation of Topic III-4.C.

The SEP-II issue of pipe breaks inside containment for San Onofre Nuclear Generating Station, Unit 1 (SONGS 1) was never fully resolved because the decision to shut down SONGS 1 was made before the final evaluation was due. NUREG-1443 (NRC 1991a) indicates that the licensee was to respond to Topic III-5.A prior to refueling outage 12; however, that outage was never reached due to the decision to decommission SONGS 1.

3.1.3 Conclusions

During the course of the SEP, a large number of structures, systems, and components were evaluated for the effects of pipe break and internal missile generation inside containment.

addressed by the NRC through IE Bulletin 79-01B (NRC 1980a) for Class 1E equipment and Generic Letter 82-33 (NRC 1982a) for instrumentation to comply with RG 1.97 criteria (NRC 1980b). These two documents required all applicable BWR and PWR plants to provide the NRC with sufficient documentation to justify the functionality of all systems required to mitigate the consequences of inside containment pipe break. Once completed, this NRC review process reaffirmed, within the reasonable limits of backfitting, that each plant has Class 1E equipment and instrumentation capable of properly functioning in post-accident conditions. Consideration of flooding effects inside containment due to high-energy pipe breaks or spray from high or moderate-energy piping was also handled by the NRC in a generic fashion for the SEP-III plants. The resolution of Unresolved Safety Issue A-17 (NRC 1989) included implementing Generic Letter 88-20 (NRC 1988b) that established the Individual Plant Examination (IPE) process. These system interaction concerns included an assessment of internal flooding and other forms of water intrusion, including spraying, dripping, and splashing. Therefore, the proper completion of the IPE review process should also reaffirm that plant safety-related equipment is indeed capable of performing their intended functions during post-accident flooding conditions.

3.1 Review of SEP-II UFSARs and Related SERs

The NRC initiated the SEP in February 1977 to reconfirm and document the safety of older operating nuclear plants' designs. The NRC SEP-II effort revisited the issue of pipe breaks inside containment and their related effects for those ten older nuclear plants. The specific SEP-II topics related to pipe breaks inside containment were Topic III-4.C (internally generated missiles) and Topic III-5.A (effects of pipe break on structures, systems, and components inside containment). The SEP-II review also provided safety assessments adequate for conversion of these plants' provisional operating licenses to full-term operating licenses.

The reason we reviewed the SEP-II plants' UFSARs and any related SERs was to understand the changes that each plant was required to make to adequately satisfy the NRC's SEP-II review. Although the SEP-II plants were designed before the SEP-III plants, any required changes made by the SEP-II plants might be directly applicable to the SEP-III plants.

3.1.1 Information Gathering Process

The NRC's Nuclear Document System (NUDOCS) was used as one of the sources of information to complete this task. NUDOCS allows database searches to be made on documents received and issued by the NRC. Key word or phrase searches, date searches, report searches, and author searches can be performed. An important limitation is that NUDOCS is relatively complete only for docketed material dating back to the 1979 or 1980 timeframe. It does not necessarily contain documentation dated early than 1980.

The searches for the UFSARs simply involved locating the microfiche that contained the initial UFSARs and their yearly updates. The Idaho National Engineering and Environmental Laboratory (INEEL) maintains a copy of the NUDOCS microfiche files. Hard copies of all UFSARs are not maintained at the INEEL. All updates were located, from the initial 1982 UFSAR submittal to the latest available microfiche update (typically the 1994 update). Most of the UFSARs reviewed did not follow the format of RG 1.70 (NRC 1978), but duplicated the plant's initial FSAR format. This meant that information of interest could be located virtually anywhere in the document, which increased the time required for the review effort.

Based on experience gained from reviewing an initial sample set of UFSARs, we decided to limit the review of SEP-II UFSARs to a small sample to first confirm whether they could be expected to provide any significant information relevant to GSI 156-6.1. Two of the ten SEP-II UFSARs were reviewed. As expected, these two UFSARs contained very little substance.

Table 3-1 shows the pertinent information obtained from this review effort.

3.1.2 Results From IPSAR NUREGs

The SEP-II UFSARs referenced the Integrated Plant Safety Assessment Report (IPSAR) NUREGs (NRC 1982b; NRC 1983a through 1983g; NRC 1984a; and NRC 1986) that specifically dealt with the NRC's entire SEP-II review. These NUREGs referenced and summarized both the licensee's submittals and the NRC's evaluations. Additional NUDOCS searches located many of the SERs referenced in the IPSAR NUREGs; however, most did not contain any substantial information beyond that contained in the NUREGs.

Table 3-2 summarizes the results obtained from the IPSAR NUREGs for SEP-II Topics III-4.C and III-5.A. All of the SEP-II plants were required to perform some form of engineering evaluation in order to satisfactorily address each topic and demonstrate adequate safety to the NRC staff. A typical evaluation consisted of (1) defining a pipe break location, (2) determining the consequences resulting from pipe whip, jet spray, impingement, or other related pipe break effects, and (3) determining if the plant operators could still bring the plant to a safe operating condition using alternate systems, redundant systems, or other means. As a result of these pipe break effects reviews, two SEP-II plants (Yankee Rowe and Haddam Neck) were required to make inspection changes, one plant (Palisades) was required to make Technical Specification changes, two plants (Yankee Rowe and LaCrosse) were required to make procedural changes, and six SEP-II plants (Yankee Rowe, LaCrosse, Oyster Creek, Ginna, Haddam Neck, and Palisades) were required to make physical modifications. Table 3-3 provides additional specific information on the plant changes resulting from the SEP-II review.

The Haddam Neck plant provided unique information regarding the resolution of concerns over pipe breaks inside containment. The Haddam Neck licensee committed (Wang 1993) to several physical modifications to improve the reliability of the auxiliary feedwater system and decrease the reliance on feed-and-bleed. The unique perspective to these modifications is that all of these changes were made outside containment. The modifications consisted of (1) installing a new motor-driven auxiliary feedwater pump (in addition to the existing steam-driven turbine pumps) outside the turbine pump enclosure, powered by emergency onsite (diesel bus) power, (2) adding more auxiliary feedwater piping that discharges from the motor-driven pump and connects to the existing auxiliary feedwater piping in the turbine pump enclosure, (3) dedicating the demineralized water storage tank to the auxiliary feedwater system, and (4) housing the electric auxiliary feedwater pump, the automatic initiation support skids, and some of the additional auxiliary feedwater piping and valves in a new seismically designed enclosure.

We need to clarify that the NRC required the SEP-II plants to evaluate the effects of internally generated missiles both inside and outside containment (Topic III-4.C). Two of the SEP-II plants (Ginna and Haddam Neck) had Topic III-4.C addressed specifically in their IPSAR NUREGs. Only Ginna had a modification requirement (inside containment) resulting from this SEP-II topic. The remainder of the SEP-II plants were evaluated and no changes were required. Each of the NUREGs referenced NRC letters dealing with the evaluation of Topic III-4.C.

The SEP-II issue of pipe breaks inside containment for San Onofre Nuclear Generating Station, Unit 1 (SONGS 1) was never fully resolved because the decision to shut down SONGS 1 was made before the final evaluation was due. NUREG-1443 (NRC 1991a) indicates that the licensee was to respond to Topic III-5.A prior to refueling outage 12; however, that outage was never reached due to the decision to decommission SONGS 1.

3.1.3 Conclusions

During the course of the SEP, a large number of structures, systems, and components were evaluated for the effects of pipe break and internal missile generation inside containment.

Table 3-1. Review results from search of SEP-II plant UFSARs.

	Missile/Jet Protection	Pipe Rupture Consideration						Environmental Qualification Electrical and Instrumentation					Separation	
					UFSAR Commitment			UFSAR Commitment					UFSAR Commitment	
Plant Name	Pipe Rupture Considered	Considered	Specific Locations Identified	Physical Plant Protection	RG 1.46	SRP 3.6.1 3.6.2	Other Plant Specific	IEEE 279 1968	IEEE 279 1971	IEEE 323 1974	RG 1.89	Other Plant Specific	RG 1.75	Other Plant Specific
Palisades	Yes[a]	Yes	No	Yes[b]			X		X	X[c]		X		X
R. E. Ginna	Yes[d,e,f]	Yes	No	Yes[g]		X			X[h]	X[h]				X[i]

Notes:

* All SEP-II plants had to satisfy the NRC regarding RG 1.97 (or the intent of it via GL 82-33) and had to satisfactorily respond to IE-79-01B.

a. Missiles only from primary coolant loop mentioned.

b. UFSAR indicates that no modifications were necessary but existing structures, barriers, or restraints had to be utilized.

c. Some recent upgrades per these later criteria.

d. Based on information provided in the UFSAR, some systems were apparently not considered as missile sources (main steam, feedwater, etc.). Also, not enough discussion was presented to assure the reader that all potential missile targets had been considered, especially instrumentation and electrical items.

e. Minimal mention of jet spray effects (found only for pressurizer surge line).

f. No mention located in UFSAR regarding effects of inside containment moderate-energy piping through-wall leakage.

g. Loop compartment barriers exist for missile effects. Unclear if pipe whip restraints and jet impingement shields installed for arbitrary intermediate pipe breaks were only ones and if they were or were not all removed via Generic Letter 87-11.

h. Reviewed to determine if intent satisfied. (For R. E. Ginna, IEEE 323-1971 and IEEE 344-1971 addressed).

i. Mentioned under cables.

Table 3-2. Review results from IPSAR NUREGs for SEP-II plant evaluations.

Plant Name	Type	NUREG Number	Changes Resulting from SEP-II Evaluation				
			Additional Evaluations	Inspection Changes	Procedural Changes	Physical Mods	Tech Spec Changes
Palisades	PWR CE 2-Loop	0820 and Supplement 1	X			X	X
R. E. Ginna	PWR W 2-Loop	0821 and Supplement 1	X			X	
Oyster Creek	BWR-2 Mk I	0822 and Supplement 1	X			X	
Dresden 2	BWR-3 Mk I	0823 and Supplement 1	X				
Millstone 1	BWR-3 Mk I	0824 and Supplement 1	X				
Yankee Rowe	PWR W 4-Loop	0825 and Supplement 1	X	X	X	X	
Haddam Neck	PWR W 4-Loop	0826 and NRC letter (Accession 9304200321)	X	X		X	
LaCrosse	BWR pre-Mk I	0827 and Supplement 1	X		X	X	
Big Rock Point	BWR-1 pre-Mk I	0828	X				
SONGS 1	PWR W 3-Loop	0829 and 1443	X				

Notes:

CE - Combustion Engineering was the NSSS supplier

W - Westinghouse was the NSSS supplier

MK I - Mark I containment design

Table 3-3. Details of SEP-II plant changes required by IPSAR NUREGs.

Plant Name	Inspection Changes Resulting from SEP-II Evaluation	Procedural Changes Resulting from SEP-II Evaluation	Physical Modifications Resulting from SEP-II Evaluation	Tech Spec Changes Resulting from SEP-II Evaluation
Palisades PWR CE 2-Loop			The licensee was required to provide protection to the instrument lines for steam generator pressure and level indication. NRC was concerned about charging or letdown lines possibly causing damage.	The licensee agreed to modify the Technical Specifications concerning the operability of the leak-detection system, as required to monitor leakage resulting from potential pipe breaks inside containment.
R. E. Ginna PWR W 2-Loop			The licensee committed to reroute nearby instrumentation cables so that sufficient required nearby instrumentation will be available for accident mitigation, post accident monitoring, and safe shutdown monitoring, assuming a single postulated pipe break in the charging line, letdown line, or in the "A" accumulator tap. In addition, the licensee has committed to install a restraint on valve CV-5738 on the steam generator blowdown system in response to missile concerns.	
Oyster Creek BWR-2 Mk I			In response to a concern regarding cascading breaks, the licensee was required to complete installation of its airborne particulate and gaseous radiation monitoring system (APGRMS).	
Yankee Rowe PWR W 4-Loop	The licensee committed to perform augmented inspections of the eight main steam piping welds. Also, the licensee committed to have an augmented inservice inspection (ISI) program for welds at the main steam nozzle at the steam generator and at welds on the electrical penetration blister 12E.	The licensee committed to modify the procedure for visual inspection of the 5-in. (0.13 m) crossover piping for potential inservice pipe degradation.	The licensee committed to modify the steam generator blowdown piping supports for jet impingement loads.	

Table 3-3. (continued).

Plant Name	Inspection Changes Resulting from SEP-II Evaluation	Procedural Changes Resulting from SEP-II Evaluation	Physical Modifications Resulting from SEP-II Evaluation	Tech Spec Changes Resulting from SEP-II Evaluation
LaCrosse BWR pre-Mk I		The licensee committed to establish procedures to close the decay heat cooling system blowdown line valve in the event of an accident requiring containment isolation.	The licensee committed to reroute two branch lines connected to the high pressure core spray (HPCS) line that might be damaged by jet impingement from a break in the alternate core spray line. Also, the licensee committed to relocate a valve in the decay heat cooling system blowdown line.	
Haddam Neck PWR W 4-Loop	The licensee committed to implement a dedicated erosion/corrosion program for the piping in the turbine pump enclosure to reduce the probability of loss of auxiliary feedwater and therefore decrease the potential reliance on feed-and-bleed.		The licensee committed to four physical modifications which increased auxiliary feedwater reliability. These are discussed in the text. The licensee also committed to modify the wide-range and narrow-range steam generator level instrumentation so that it was either redundant and physically separated or routed taking into account pipe break effects. The licensee also upgraded the cabling of the Loop T_{HOT} and Core Exit Thermocouples so that they are physically separated and redundant. Finally, Containment Water Level and Containment High Range Radiation Detectors were installed in response to NUREG-0737 and are physically separated and redundant.	

Notes:

CE - Combustion Engineering was the NSSS supplier

W - Westinghouse was the NSSS supplier

MK I - Mark I containment design

However, only a small number of inspection, technical specification, procedural, and physical modifications were required. The number of changes resulting from the SEP-II reviews averaged slightly more than two changes per plant. These changes did enhance and improve the safety of those plants. However, the small number of changes indicate that even though high-energy pipe breaks were not explicitly required to be considered, important features to mitigate the effects (e.g., redundancy, separation, routing) were already included in the initial design of many of the plants. Thus, when the SEP-II review was concluded, the corrective actions required to update the plants to the more recent standards for pipe break concerns inside containment were minimal.

Looking at the SEP-II plants either as a group or separately as PWRs and BWRs, no common locations or reasons for the modifications were determined. It appears that the resulting modifications display little if any pattern. This reinforces the view that each plant has many unique design features and it is those unique aspects (e.g., plant layout, arrangement and construction features of interior walls, the relative locations of components, equipment, and structures, amount of system redundancy and separation used in the design) of each plant that must be considered in pipe break evaluations.

3.2 Review of SEP-III UFSARs and Related SERs

Since the objective of this research program was to enhance the prioritization of the SEP-III plants regarding inside containment pipe break effects, the majority of the effort was spent on reviewing SEP-III documentation. Consequently, information was sought relating to the effects of pipe breaks inside containment and related topics.

Initial project planning included visits to four SEP-III plants. A fifth plant (Vermont Yankee) was visited several years later. The purpose of the visits was to obtain information by observing the relative locations of representative high- and moderate-energy piping systems and equipment important to plant safety, and by observing the measures taken to mitigate the effects of pipe breaks. This information would then be compared to similar data obtained from planned visits to later vintage (non-SEP) plants. We would then make qualitative judgments regarding the general susceptibility of the SEP-III plants' equipment to damage resulting from pipe ruptures or jet impingement. We will describe the observations of these plants in Section 3.4 below.

We also decided that pipe replacement and repair work performed at several BWRs might affect the pipe break frequency and thus the potential core damage frequency at these plants. The pipe replacement and repair programs addressed an industry concern regarding intergranular stress corrosion cracking (IGSCC). In conjunction with ongoing docket searches, we also included additional document searches to identify those SEP-III BWRs that have undertaken pipe replacement or repair programs. The results of this review are also described below.

3.2.1 Information Gathering Process

We began by using the NRC's NUDOCS system. As previously indicated in Section 3.1, the NUDOCS searches were useful for UFSARs. However, NUDOCS was not very helpful for locating relevant SERs. This was because most of the SERs containing NRC reviews of inside containment pipe break evaluations were written for the issuance of the operating license, and thus were issued in the 1969 to 1974 timeframe. Typically, NUDOCS does not contain documentation dated earlier than 1979.

The effort to obtain current UFSAR information was significant. Therefore, we chose a limited number of SEP-III plant UFSARs for initial review to determine whether significant information relevant to GSI 156-6.1 would be obtained. The SEP-III plant UFSARs chosen varied by reactor type (BWR or PWR), NSSS vendor (General Electric, Westinghouse, Combustion Engineering, or Babcock & Wilcox), and the timeframe that the original FSAR was issued (based on the docket number).

UFSARs for 12 out of the 41 SEP-III units (roughly 30%) were reviewed. Table 3-4 lists the 12 units highlighted in bold print along with all of the other SEP-III units. Table 3-4 lists these SEP-III plants by docket number, which roughly corresponds to the relative time that the licensees first applied to the NRC (or its predecessor organization) for review of construction permit documentation. The selected UFSARs were distributed throughout the group's population. However, the information obtained from these UFSARs was inadequate for our purposes. Unlike the UFSARs for more recent plants, the SEP-III UFSARs reviewed did not contain much discussion on inside containment pipe breaks. Many of these UFSARs did not address pipe break evaluations at all, while the others contained only minimal information regarding design commitments made for the operating license. Since the UFSAR reviews did not provide the desired information, we decided to concentrate the review on the relevant SERs.

The NUDOCS database contains little information that originated before 1979. Since the initial SERs for the SEP-III plants would have been issued before 1979, there was some uncertainty that the desired information would be located in the NUDOCS database. However, searches were performed in the attempt to identify any existing available SER data. Searches were structured for the individual plants by specifying their docket number and limiting the database to search for SERs only. For efficiency, searches were performed with the key word limitations of "pipe break", "pipe rupture", or "break location". INEEL personnel experienced in performing NUDOCS searches obtained no listings after attempting the searches described above. To guard against the possibility of misinterpretation of how NUDOCS performs its searches, we consulted with the NRC NUDOCS personnel in an attempt to better refine our search parameters. The NRC NUDOCS personnel also attempted several searches and also obtained no findings. In fact, they tried a search with the key word "pipe" on one of the plants and again obtained no listings. The NRC NUDOCS staff indicated that SERs must have been entered into NUDOCS in an unusual fashion not to get any listings for such a common keyword.

To ensure completeness, a broader search of the NUDOCS database was made. General listings were obtained of all the SERs for a representative BWR (Dresden 3) and PWR (Turkey Point 3 & 4). These searches identified a total of 172 SERs for Dresden 3 and 221 for Turkey Point 3 & 4. We reviewed all of the SERs for these two different plants. No SERs were located that addressed the NRC's evaluation of inside containment pipe break effects. However, two of the SERs for the BWR plant and six of the SERs for the PWR plant did provide additional information regarding the environmental qualification of equipment and the effects of flooding resulting from HELB breaks. The issue dates and topics for these SERs are listed below:

For Dresden 3 (BWR):

6/3/93	Post-accident neutron flux monitoring instrumentation
2/12/86	Environmental qualification of electric equipment

For Turkey Point 3 & 4 (PWR):

8/12/87	Physical separation and fire protection of electrical cables
10/25/84	Environmental qualification of safety-related electrical equipment
3/29/83	Environmental qualification of safety-related electrical equipment
12/13/82	Environmental qualification of safety-related electrical equipment
5/21/81	Environmental qualification of safety-related electrical equipment
9/4/79	Susceptibility of safety-related equipment to flooding caused by failure of nonsafety-related equipment

Considering the date limitations of the NUDOCS database and the scarcity of

Table 3-4. SEP-III plants selected for UFSAR review.

Plant Name	NSSS Vendor	Reactor Type	Docket Number
Nine Mile Pt. 1	GE	BWR-2, MK I	220
Indian Pt. 2	W	PWR 4 Loop	247
Dresden 3	GE	BWR-3, MK I	249
Turkey Pt. 3	W	PWR 3 Loop	250
Turkey Pt. 4	W	PWR 3 Loop	251
Quad Cities 1	GE	BWR-3, MK I	254
Browns Ferry 1	GE	BWR-4, MK I	259
Browns Ferry 2	GE	BWR-4, MK I	260
Robinson 2	W	PWR 3 Loop	261
Monticello	GE	BWR-3, MK I	263
Quad Cities 2	GE	BWR-3, MK I	265
Pt. Beach 1	W	PWR 2 Loop	266
Oconee 1	B&W	PWR Standard	269
Oconee 2	B&W	PWR Standard	270
Vermont Yankee	GE	BWR-4, MK I	271
Peach Bottom 2	GE	BWR-4, MK I	277
Peach Bottom 3	GE	BWR-4, MK I	278
Surry 1	W	PWR 3 Loop	280
Surry 2	W	PWR 3 Loop	281
Prairie Island 1	W	PWR 2 Loop	282
Ft. Calhoun	CE	PWR 2 Loop	285
Indian Pt. 3	W	PWR 4 Loop	286
Oconee 3	B&W	PWR Standard	287
TMI 1	B&W	PWR Standard	289
Pilgrim	GE	BWR-3, MK I	293
Zion 1	W	PWR 4 Loop	295
Cooper	GE	BWR-4, MK I	298
Pt. Beach 2	W	PWR 2 Loop	301
Zion 2	W	PWR 4 Loop	304
Kewaunee	W	PWR 2 Loop	305
Prairie Island 2	W	PWR 2 Loop	306
Maine Yankee	CE	PWR 3 Loop	309
ANO-1	B&W	PWR Standard	313
Cook 1	W	PWR 4 Loop	315
Calvert Cliffs 1	CE	PWR 2 Loop	317
Hatch 1	GE	BWR-4, MK I	321
Brunswick 2	GE	BWR-4, MK I	324
Arnold	GE	BWR-4, MK I	331
FitzPatrick	GE	BWR-4, MK I	333
Millstone 2	CE	PWR 2 Loop	336
Trojan	W	PWR 4 Loop	344

information retrieved, we decided not to continue searching NUDOCS for SER data.

Instead, we attempted to locate SERs that were issued before to 1979 or 1980. This search led us to the INEEL Technical Library, where microfiche copies of documents dating from the 1960s and the 1970s were located for many of the NRC dockets.

Three plants were selected for a brief review of all available older documentation to determine if any of it contained NRC review information related to pipe break effects inside containment. These plants (a total of five units) were D. C. Cook 1; Oconee 1, 2, and 3; and Millstone 2. The reviews for these plants indicated that the licensing SER (the SER written by the NRC supporting the issuance of the plant's operating license) usually contained the NRC's only commentary on the plant's design efforts regarding pipe breaks inside containment, missiles, pipe whip, etc. Therefore, we decided to pursue only the licensing SERs for information relevant to GSI 156-6.1. Supplements to these licensing SERs were included in the review when available. Virtually all of the licensing SERs for the SEP-III BWRs and PWRs were reviewed with the exception of Surry 1 and 2. Neither of the Surry SERs were available in the INEEL Technical Library. Since an acceptable amount of data had been acquired, additional efforts to obtain the Surry SERs were not deemed necessary.

3.2.2 Results of Reviews

Table 3-5 summarizes the results obtained from the review of the sampled SEP-III UFSARs. Although all of the reviewed UFSARs indicated that pipe breaks were considered, the information presented regarding affected systems, design provisions made to mitigate the effects of pipe break, and other more detailed information was not located.

Tables 3-6 and 3-7 summarize all of the comments contained in the SEP-III licensing SERs related to pipe breaks inside containment. Table 3-6 addresses the SEP-III BWR plants, while Table 3-7 provides commentary on the SEP-III PWR plants. As can be seen from these tables, much more detailed information was obtained than in the review of UFSARs. The specifics regarding installation of pipe whip restraints were clarified in much more detail. The major design concerns for the earlier SEP-III plants were discussed and the imposed loadings were more clearly defined. Any further inside-containment pipe break information (including current status) would have to be obtained by contacting each specific SEP-III plant.

3.2.3 Conclusions

In general, the most obvious conclusion determined from review of the SEP-III plant UFSAR and SER information was that the discussion of pipe-break effects inside containment continually increased with later construction dates. Discussion of pipe break topics was notably absent in information for the earlier plants, whereas the later plants provided much more information regarding criteria, evaluations, multiple pipe breaks for multiple systems, and system interactions with other adjacent safety-related equipment.

Based on the information reviewed, the early-timeframe SEP-III BWR plants (May 1969 through November 1970 licensing SER date) were much more focused on maintaining the integrity of the primary containment. Of course, all plants considered the consequences of the high containment pressure that could potentially be reached during a worst case Loss-Of-Coolant Accident (LOCA). However, most of the early-timeframe SEP-III BWR plants also considered jet impingement loadings on the containment and some even considered pipe whip (impact loads). For the mid-timeframe (June 1971 through November 1972 licensing SER date) BWR plants, more systems were typically considered as being capable of pipe break. Additional provisions were made to address these increased number of pipe break concerns including additional ISI to demonstrate a reduced potential for pipe break. However, these plants were still mainly concerned with primary containment integrity. Many of these mid-timeframe plants added protective covers to the

Table 3-5. Review of SEP-III plant UFSARs.

	Flood Protection	Missile/Jet Protection	Pipe Rupture Consideration						Environmental Qualification Electrical and Instrumentation					Separation	
						UFSAR Commitment			UFSAR Commitment					UFSAR Commitment	
Plant Name	Pipe Rupture Considered	Pipe Rupture Considered	Considered	Specific Locations Identified	Physical Plant Protection	RG 1.46	SRP 3.6.1 3.6.2	Other Plant Specific	IEEE 279 1968	IEEE 279 1971	IEEE 323 1974	RG 1.89	Other Plant Specific	RG 1.75	Other Plant Specific
Nine Mile 1	No[a]	Yes[b]	Yes[c,d]	No	No[e]			X					X		X[f]
Oconee 1, 2 & 3	No[g]	Yes[b,h]	Yes[d,i]	No	Yes[j]			X	X				X		X[f]
Prairie Island 1&2	No[g]	Yes	Yes[d,k]	No	Yes			X		X	X[l]		X		X
Ft. Calhoun	No[m]	Yes[h]	Yes[d]	No	Yes			X	X				X		X[f]
Millstone 2	No[g]	Yes[h,n]	Yes[d]	No	Yes			X		X			X		X
FitzPatrick	No[a,g]	No[g]	Yes[p]	Yes[q]	Yes[r]			X		X			X		X[f,o]
D.C. Cook 1	No[g]	Yes[s]	Yes[d,p]	No	Yes			X	X				X		X[g]
Browns Ferry 1 & 2	No[g]	Yes[s]	Yes[t]	No	Yes[t]			X					X		X[u]

Notes:

* All plants had to satisfy the NRC regarding RG 1.97 (or the intent of it via GL 82-33) and had to satisfactorily respond to IE 79-01B.

a. Flooding of containment was mentioned as potential occurrence during LOCA.

b. Limited items considered as missiles.

c. Not designed for GDC-4 but intent satisfied mainly by containment integrity and redundancy/backup.

d. No specific mention of moderate energy systems having through wall leakage cracks.

e. No specific mention of pipe whip restraints, jet or missile shields, etc. found in UFSAR.

f. Mentioned under cables.

g. No specific mention located in UFSAR.

h. Limited mention of jet spray effects or protection.

i. Limited mention of components considered.

j. Mention of barriers for missiles and jet impingement made in UFSAR but only shielded cubicles mentioned for pipe rupture mitigation in UFSAR.

Table 3-5. (continued).

Plant Name	Flood Protection: Pipe Rupture Considered	Missile/Jet Protection: Pipe Rupture Considered	Pipe Rupture Consideration: Considered	Pipe Rupture Consideration: Specific Locations Identified	Pipe Rupture Consideration: Physical Plant Protection	Pipe Rupture Consideration: UFSAR Commitment: RG 1.46	Pipe Rupture Consideration: UFSAR Commitment: SRP 3.6.1 3.6.2	Pipe Rupture Consideration: UFSAR Commitment: Other Plant Specific	Environmental Qualification Electrical and Instrumentation: UFSAR Commitment: IEEE 279 1968	Environmental Qualification Electrical and Instrumentation: UFSAR Commitment: IEEE 279 1971	Environmental Qualification Electrical and Instrumentation: UFSAR Commitment: IEEE 323 1974	Environmental Qualification Electrical and Instrumentation: UFSAR Commitment: RG 1.89	Environmental Qualification Electrical and Instrumentation: UFSAR Commitment: Other Plant Specific	Separation: UFSAR Commitment: RG 1.75	Separation: UFSAR Commitment: Other Plant Specific

Notes (continued):

k. Leak-Before-Break used on main coolant and pressurizer surge lines as generic Westinghouse plant issue.

l. Some recent upgrades per this later criteria.

m. Submergence mentioned only for electrical equipment.

n. Missiles only from primary coolant loop mentioned.

o. Minimal mention located for engineered safety features systems or ECCS.

p. Limited systems considered.

q. Minimal information provided. Pipe whip restraints placed only where convenient. Locations approximated for main steam and feedwater lines only. Unclear over differentiation between restraints for seismic and pipe whip restraints.

r. Mention was only found for pipe whip restraints. No mention of missile or jet impingement barriers found.

s. No mention of jet impingement on items such as electrical equipment, instrumentation, other safety-related piping, etc. Jet impingement discussed only for large structures and barriers.

t. Limited information available

u. Vague mention of physical separation. Minimal definitive guidelines provided.

Table 3-6. Review results from SEP-III BWR plant SERs.

Plant Name (SER Date)	Missiles Considered	Design Considerations for Structures, Systems, and Components Subjected to Pipe Break Effects					
		Containment Shell	Containment Pen.	Recirc.	Main Steam	Feedwater	Other
Nine Mile 1 (5-69)		Jet impingement adequate	Jet impingement adequate and reaction forces OK				
Monticello (3-70)				Pipe whip restraints added	More ISI	More ISI	
Dresden 3 (11-70)	Containment OK	Jet impingement adequate		Pipe whip restraints added			Biological shield OK for pipe rupture pressures.
Vermont Yankee (6-71)	Containment OK	Jet impingement adequate and protective cover for MS and FW breaks installed on lower spherical portion	Reaction forces OK	Pipe whip restraints added			
Quad Cities 1 (8-71)	Containment OK	Protective cover for MS, FW, and HPCI breaks installed		Pipe whip restraints added	More ISI	More ISI	RHR cannot damage containment. Biological shield OK for pipe rupture pressures and jet impingement. Shield plugs restrained to not become missiles.
Quad Cities 2 (8-71)	Containment OK	Protective cover for MS, FW, and HPCI breaks installed		Pipe whip restraints added	More ISI	More ISI	RHR cannot damage containment. Biological shield OK for pipe rupture pressures and jet impingement. Shield plugs restrained to not become missiles.
Pilgrim (8-71)	Containment OK	Jet impingement adequate and protective cover for MS, FW, RHR, and HPCI breaks installed on spherical portion		Pipe whip restraints added			Biological shield OK for pipe rupture pressures and jet impingement. Shield plugs restrained to not become missiles. Pipe ruptures in cylindrical portion of drywell do not result in impact energies sufficient to perforate the drywell shell.

Table 3-6. (continued).

Plant Name (SER Date)	Missiles Considered	Design Considerations for Structures, Systems, and Components Subjected to Pipe Break Effects					
		Containment Shell	Containment Pen.	Recirc.	Main Steam	Feedwater	Other
Browns Ferry 1 (6-72)	Containment OK-Recirculation pumps with overspeed prevention make missiles low probability	Jet impingement adequate and protective cover for MS, FW, and RHR breaks installed on lower spherical portion	Jet protection barriers provided for large pipe penetration, reaction forces OK	Pipe whip restraints added	More ISI	More ISI	More ISI on RHR (another unrestrained line).
Browns Ferry 2 (6-72)	Containment OK-Recirculation pumps with overspeed prevention make missiles low probability	Jet impingement adequate and protective cover for MS, FW, and RHR breaks installed on lower spherical portion	Jet protection barriers provided for large pipe penetration, reaction forces OK	Pipe whip restraints added	More ISI	More ISI	More ISI on RHR (another unrestrained line).
Peach Bottom 2 (8-72)	Containment OK	Jet impingement adequate and protective cover for MS, FW, RHR, and HPCI breaks installed on spherical portion	Jet protection barriers provided for large pipe penetrations	Pipe whip restraints added			Biological shield OK for pipe rupture pressures and jet impingement. Shield plugs restrained to not become missiles. Pipe ruptures in cylindrical portion of drywell do not result in impact energies sufficient to perforate the drywell shell.
Peach Bottom 3 (8-72)	Containment OK	Jet impingement adequate and protective cover for MS, FW, RHR, and HPCI breaks installed on spherical portion	Jet protection barriers provided for large pipe penetrations	Pipe whip restraints added			Biological shield OK for pipe rupture pressures and jet impingement. Shield plugs restrained to not become missiles. Pipe ruptures in cylindrical portion of drywell do not result in impact energies sufficient to perforate the drywell shell.
J. A. Fitzpatrick (11-72)	Containment OK-Recirculation pumps with overspeed prevention make missiles low probability	Jet impingement adequate and protective cover (per UFSAR)	Reaction forces OK	Pipe whip restraints added	Pipe whip restraints added, more ISI	Pipe whip restraints added, more ISI	Pipe whip restraints added where break could result in containment impact. More ISI at locations where restraints not installed. ECCS redundant. Shield and RV support structures OK for pipe whip and jet impingement loads.

Table 3-6. (continued).

Plant Name (SER Date)	Missiles Considered	Design Considerations for Structures, Systems, and Components Subjected to Pipe Break Effects					
		Containment Shell	Containment Pen.	Recirc.	Main Steam	Feedwater	Other
Duane Arnold (1-73)	Category I structures OK, recirc. pumps with overspeed prevention make missiles low probability						Pipe break evaluations per proposed RG 1.46.
Cooper (2-73)	Containment OK-Recirculation pumps with overspeed prevention make missiles low probability	Jet impingement adequate and protective cover for MS, FW, RHR, and HPCI breaks installed on cylindrical and spherical portions, internal structures designed for jet impingement and differential pressure	Jet protection barriers provided for large penetrations	Pipe whip restraints added			Pipe break evaluations per intent of RG 1.46. More ISI at locations where restraints not installed. ECCS redundant.
E. I. Hatch 1 (5-73)	Recirculation pumps with overspeed prevention make missiles low probability	Jet protection barriers provided for vent openings inside drywell to protect vent system	Jet protection barriers provided for pipe penetrations with bellow joints				Pipe break evaluations per intent of RG 1.46. Jet loads should not disable or degrade essential equipment.
Brunswick 2 (11-73)	Category I structures OK but no internal missiles indicated, recirculation pumps with overspeed prevention reduces missile probability	Containment foundations, and concrete supports designed for DBA loads, internal structures OK for pressure, jet impingement, and accident loads					Pipe break evaluations per RG 1.46.

Note:

a. Containment designs are all free-standing steel primary containments with a surrounding concrete reactor building except for Brunswick 2 which is a steel-lined concrete primary containment with a surrounding concrete reactor building.

Table 3-7. Review results from SEP-III PWR plant SERs.

Plant Name (SER Date)	Missiles Considered	Design Considerations for Structures, Systems, and Components Subjected to Pipe Break Effects					
		Containment Shell	Containment Pen.	RCS Loop	Main Steam	Feedwater	Other
Robinson 2 (5-70)							
Pt. Beach 1 (7/70)							
Pt. Beach 2 (7/70)							
Indian Pt. 2 (11/70)	Considered missiles from primary system only, Category I systems and containment adequate, RCS pump adequately designed and appropriate ISI used so no missile concern						
Oconee1 (12/70)	Containment, RCS, and associated engineered safety features OK RCS pump adequately designed and appropriate ISI used so no missile concern		Containment penetration room exists	More restraints added, more ISI attention on piping whose failure could damage feedwater ring header			
Oconee 2 (12/70)	Containment, RCS, and associated engineered safety features OK, RCS pump adequately designed and appropriate ISI used so no missile concern		Containment penetration room exists	More restraints added, more ISI attention on piping whose failure could damage feedwater ring header			

Table 3-7. (continued).

Plant Name (SER Date)	Missiles Considered	Design Considerations for Structures, Systems, and Components Subjected to Pipe Break Effects					
		Containment Shell	Containment Pen.	RCS Loop	Main Steam	Feedwater	Other
Oconee 3 (12/70)	Containment, RCS, and associated engineered safety features OK, RCS pump adequately designed and appropriate ISI used so no missile concern		Containment penetration room exists	More restraints added, more ISI attention on piping whose failure could damage feedwater ring header			
Surry 1 (2/71)							Document not available
Surry 2 (2/71)							Document not available
Maine Yankee (2/72)	NSSS protected						
Turkey Pt. 3 (3/72)	Yes per Section 5.1.8.3 and Appendix 5E of FSAR, RCS pump adequately designed and appropriate ISI used so no missile concern	Shield structure designed for differential pressure, reactor cavity designed for longitudinal RCS pipe split					
Turkey Pt. 4 (3/72)	Yes per Section 5.1.8.3 and Appendix 5E of FSAR, RCS pump adequately designed and appropriate ISI used so no missile concern	Shield structure designed for differential pressure, reactor cavity designed for longitudinal RCS pipe split					

Table 3-7. (continued).

Plant Name (SER Date)	Missiles Considered	Design Considerations for Structures, Systems, and Components Subjected to Pipe Break Effects					
		Containment Shell	Containment Pen.	RCS Loop	Main Steam	Feedwater	Other
Kewaunee (7/72)	Category I structures adequately designed for missiles	Jet impingement adequate, internal compartments OK for differential pressure and jet impingement	Jet impingement adequate, guard pipes assure that steam will not discharge into annulus if pipe breaks				
Ft. Calhoun (8/72)	NSSS protected	Internal compartments OK for differential pressure and jet impingement					
Calvert Cliffs 1 (8/72)	NSSS protected, RCS pump adequately designed and appropriate ISI used so no missile concern	Internal compartments OK for differential pressure and jet impingement	Containment penetration rooms exist				
Prairie Island 1 (9/72)	Category I structures adequately designed for missiles, RCS pump adequately designed and appropriate ISI used so no missile concern	Jet impingement adequate, internal structures OK for differential pressure and jet impingement	Jet impingement adequate, guard pipes assure that steam will not discharge into annulus if pipe breaks				Pipe rupture criteria provides protection for all vital equipment against both jet impingement and pipe whip. Evaluation included all high pressure piping.

Table 3-7. (continued).

Plant Name (SER Date)	Missiles Considered	Design Considerations for Structures, Systems, and Components Subjected to Pipe Break Effects					
		Containment Shell	Containment Pen.	RCS Loop	Main Steam	Feedwater	Other
Prairie Island 2 (9/72)	Category I structures adequately designed for missiles, RCS pump adequately designed and appropriate ISI used so no missile concern	Jet impingement adequate, internal structures OK for differential pressure and jet impingement	Jet impingement adequate, guard pipes assure that steam will not discharge into annulus if pipe breaks				Pipe rupture criteria provides protection for all vital equipment against both jet impingement and pipe whip. Evaluation included all high pressure piping.
Zion 1 (10/72)	Category I structures adequately designed for missiles, RCS pump adequately designed and appropriate ISI used so no missile concern	Internal structures OK for differential pressure and jet impingement		Pipe whip restraints added	Pipe whip restraints added	Pipe whip restraints added	Evaluation included RCS, MS and FW.
Zion 2 (10/72)	Category I structures adequately designed for missiles, RCS pump adequately designed and appropriate ISI used so no missile concern	Internal structures OK for differential pressure and jet impingement		Pipe whip restraints added	Pipe whip restraints added	Pipe whip restraints added	Evaluation included RCS, MS and FW.
ANO 1 (6/73)	Category I structures and components are adequately designed for missiles, RCS pump adequately designed and appropriate ISI used so no missile concern	Internal structures OK for differential pressure, pipe whip, and jet impingement					Pipe breaks postulated in systems operating at 300 psig or greater. Criteria different but not inconsistent with staff position. More ISI at locations where dynamic analyses required by staff indicates additional protection required.

Table 3-7. (continued).

Plant Name (SER Date)	Missiles Considered	Design Considerations for Structures, Systems, and Components Subjected to Pipe Break Effects					
		Containment Shell	Containment Pen.	RCS Loop	Main Steam	Feedwater	Other
TMI 1 (7/73)	Protection assured for containment (and liner) and components of the engineered safety features, RCS pump adequately designed and appropriate ISI used so no missile concern	RCS, MS, and FW restrained to prohibit containment damage, internal structures OK for differential pressure		Pipe whip restraints added	Pipe whip restraints added	Pipe whip restraints added	Damage to other safety related systems prohibited by restraining RCS, MS, and FW. Protection for vital systems provided by shield walls surrounding pumps and steam generators and by routing safety systems to attain separation.
Indian Pt. 3 (9/73)	Category I structures adequately designed for missiles, RCS protected by shield wall and floor, RCS pump adequately designed, and appropriate ISI used so no missile concern	Internal compartments OK for differential pressure, Category 1 structures OK for accident loads		Pipe whip restraints added	Pipe whip restraints added	Pipe whip restraints added	Pipe break evaluations per RG 1.46. Category I components and systems are provided in sufficient redundancy.
D. C. Cook 1 (9/73)	Category I structures adequately designed for missiles, RCS pump adequately designed and appropriate ISI used so no missile concern	Internal structures OK for differential pressure, pipe whip, and jet impingement		Pipe whip restraints added			Pipe break evaluations per RG 1.46. Evaluation included RCPB, connecting systems, and other systems.
Millstone 2 (5/74)	Category I structures and essential systems and components adequately designed for missiles, RCS pump adequately designed and appropriate ISI used so no missile concern	Designed for pipe rupture effects, internal structures OK for differential pressure and jet impingement					Pipe break evaluations per RG 1.46.

Table 3-7. (continued).

Plant Name (SER Date)	Missiles Considered	Design Considerations for Structures, Systems, and Components Subjected to Pipe Break Effects					
		Containment Shell	Containment Pen.	RCS Loop	Main Steam	Feedwater	Other
Trojan (10/74)	Category I structures (and systems and components located inside these structures) adequately designed for missiles, RCS pump adequately designed and appropriate ISI used so no missile concern, pump overspeed a concern	Designed for pipe rupture effects, internal structures OK for differential pressure and jet impingement					Pipe break evaluations per RG 1.46.

Note:

a. Containment designs are all concrete with steel liners except for Kewaunee and Prairie Island 1 & 2 which are free-standing steel containments and a concrete shield building with an annular space between them.

inside surface of the primary containment at locations of specific concern to reduce pipe break loadings. Only the later-timeframe (January 1973 through November 1973 licensing SER date) BWR plants appeared to consider pipe-break effects inside containment in a fashion similar to current criteria. All these plants indicated that their evaluation of pipe breaks met the intent of, or satisfied RG 1.46. The surrounding essential or safety-related equipment were finally included in the design evaluation process. The pipe break evaluations also progressed such that many of the mid- and later-timeframe BWR plants started to explicitly address internal structures. As the pipe break evaluations progressed, so did consideration of the imposed loadings. The early-timeframe plants typically considered just jet impingement or pipe whip (impact) loads, whereas the later-timeframe plants explicitly indicated the consideration of jet impingement, differential pressures, reaction loads, and pipe whip. Table 3-8 lists the BWR SEP-III plants by the timeframes defined herein and by the date of the licensing SERs.

The information contained in the UFSARs and SERs for the early-timeframe (May 1970 through March 1972 licensing SER date) SEP-III PWR plants also did not address pipe break effects in much detail. Of course, the documents did indicate that the containments were designed for high pressures due to a worst case LOCA. That was typically the only significant pipe break consideration discussed. For the mid-timeframe (from July 1972 through July 1973 licensing SER date) PWR plants, more systems were typically discussed and described as containing postulated pipe break locations. Typically, pipe whip restraints were added to the Reactor Coolant System (RCS) loop, main steam, and feedwater systems. Only the later-timeframe (September 1973 through October 1974 licensing SER date) PWR plants appeared to consider pipe-break effects inside containment in a fashion similar to current criteria. All of these plants indicated that their evaluation of pipe breaks met the intent of or satisfied RG 1.46. The pipe break evaluations also progressed such that many of the mid- and later-timeframe PWR plants started to explicitly address internal structures and some plants discussed protecting surrounding essential or safety-related equipment. As the pipe break evaluations progressed, so did consideration of the imposed loadings. The earlier plants typically considered just jet impingement loads, whereas the later plants explicitly considered jet impingement, differential pressures, reaction loads, and pipe whip. Table 3-9 lists the PWR SEP-III plants by the timeframes defined herein and by the date of the licensing SERs.

The later-timeframe BWR and PWR SEP-III plants that satisfied (and potentially those that satisfied the intent of) RG 1.46 are not expected to require any further evaluation of pipe-break effects inside containment.

3.2.4 BWR Pipe Replacement

NUREG-0531 (NRC 1979b) states that as early as 1965 cracks had been observed in the heat-affected zones of welds joining austenitic stainless steel piping and associated components. These cracks were attributed to IGSCC because of the combination of high local stresses, sensitization of the materials, and the high oxygen content of coolant used during the early years of operation in many BWRs. Material sensitization in the heat-affected zones of a weld is produced during the time after welding when the material is slowly cooled through the temperature range of 1600 to 800°F (871 to 477°C). This slow cooling allows the precipitation of chromium-rich carbides along grain boundaries. The formation of these carbides can deplete the chromium levels below that needed for corrosion protection in other adjacent grain boundaries. These depleted zones along the grain boundaries become susceptible to attack by a corrosive environment. If a high tensile stress also exists, this attack may take the form of IGSCC.

In January 1988, the NRC issued Generic Letter 88-01 (NRC 1988a) which required all operating BWRs and holders of construction permits for BWRs to state their intention to follow recommended staff positions or propose

Table 3-8. Listing of BWR SEP-III plants by timeframe and initial date of licensing SER.

Plant Name	Defined Timeframe	Operating License	Licensing Ser Date	RG 1.46 Used
Nine Mile Pt. 1	Early	8/69	5/69	
Monticello	Early	9/70	3/70	
Dresden 3	Early	1/71	11/70	
Vermont Yankee	Mid	3/72[a]	6/71	
Quad Cities 1	Mid	10/71	8/71	
Quad Cities 2	Mid	4/72	8/71	
Pilgrim	Mid	6/72	8/71	
Browns Ferry 1	Mid	12/73	6/72	
Browns Ferry 2	Mid	8/74	6/72	
Peach Bottom 2	Mid	8/73	8/72	
Peach Bottom 3	Mid	7/74	8/72	
FitzPatrick	Mid	10/74	11/72	
Duane Arnold	Late	2/74	1/73	Met proposed
Cooper	Late	1/74	2/73	Met intent
Hatch 1	Late	8/74	5/73	Met intent
Brunswick 2	Late	12/74	11/73	Met RG 1.46

Note:

a. Issuance of full power license was delayed, so the initial criticality date was used.

Table 3-9. Listing of PWR SEP-III plants by timeframe and initial date of licensing SER.

Plant Name	NSSS Vendor	Defined Timeframe	Operating License	Licensing SER Date	RG 1.46 Used
Robinson 2	W	Early	7/70	5/70	
Pt. Beach 1	W	Early	10/70	7/70	
Pt. Beach 2	W	Early	5/72	7/70	
Indian Pt. 2	W	Early	5/73[a]	11/70	
Oconee 1	B&W	Early	2/73	12/70	
Oconee 2	B&W	Early	10/73	12/70	
Oconee 3	B&W	Early	7/74	12/70	
Surry 1	W	Early	5/72	2/71	
Surry 2	W	Early	1/73	2/71	
Maine Yankee	CE	Early	10/72[a]	2/72	

Table 3-9. (continued).

Plant Name	NSSS Vendor	Defined Timeframe	Operating License	Licensing SER Date	RG 1.46 Used
Turkey Pt. 3	W	Early	7/72	3/72	
Turkey Pt. 4	W	Early	4/73	3/72	
Kewaunee	W	Mid	12/73	7/72	
Ft. Calhoun	CE	Mid	5/73	8/72	
Calvert Cliffs 1	CE	Mid	7/74	8/72	
Prairie Island 1	W	Mid	8/73	9/72	
Prairie Island 2	W	Mid	10/74	9/72	
Zion 1	W	Mid	4/73	10/72	
Zion 2	W	Mid	11/73	10/72	
ANO-1	B&W	Mid	5/74	6/73	
TMI 1	B&W	Mid	4/74	7/73	
Indian Pt. 3	W	Late	12/75	9/73	Met RG 1.46
D. C. Cook 1	W	Late	10/74	9/73	Met proposed
Millstone 2	CE	Late	8/75	5/74	Met RG 1.46
Trojan	W	Late	11/75	10/74	Met RG 1.46

Note:

a. Issuance of full power license was delayed, so the initial criticality date was used.

alternative positions on the mitigation of IGSCC effects near weldments. Although the effects of IGSCC were known and recognized for many years previous to Generic Letter 88-01, the responses to this Generic Letter contained a significant amount of data of interest. Since the presence of IGSCC and some of the mitigation methods discussed in Generic Letter 88-01 and Supplement 1 might affect the pipe break frequency, and thus the potential core damage frequency at these plants, NUDOCS searches for industry responses to Generic Letter 88-01 were pursued.

Generic Letter 88-01 required BWR licensees to submit documentation describing various options implemented to mitigate the effects of IGSCC, including pipe replacement, weld overlay reinforcement, and stress improvement processes. NUDOCS was used to search for either incoming or outgoing letters to the NRC that contained the key words "pipe replacement," "weld overlay," or "MSIP," the acronym for mechanical stress improvement process. As a result of these searches, various documents were identified and reviewed. Along with these identified documents, we obtained input regarding another stress improvement process, induction stress heating improvement (ISHI).

The results of this document review are contained in Table 3-10. Various mitigation options were used, but general observations can be made for the 16 BWR SEP-III units reviewed. The recirculation piping was clearly affected by IGSCC in all the plants, as evidenced by the piping either being replaced or repaired using weld overlays. More than half of the BWR units (9 total) replaced all or part of their recirculation systems while half of the units (8 total) incorporated weld overlays on their recirculation piping. One plant (Browns Ferry 2) replaced portions and repaired other areas of the recirculation piping with weld overlays. Other piping systems

Table 3-10. Response of SEP-III BWR plants to IGSCC concerns (1995).

Plant Name	Docket Number	Response To IGSCC Concerns: Piping Systems Replaced	Systems With Weld Overlays	Systems Using MSIP (M) or IHSI (I)
Nine Mile Point 1	220	Recirculation and associated safe ends and Emergency Condenser Steam Nozzle 5-NB		
Dresden 3	249	Recirculation and RWCU (entire system)		Core Spray (M) and Isolation Condenser Steam Supply (RPV to outboard isolation valve) (M)
Quad Cities 1	254		Recirculation and Core Spray	
Browns Ferry 1	259		Recirculation, RHR, RWCU, Core Spray	Recirculation (I)
Browns Ferry 2	260	Recirculation (risers and inlet nozzles), RWCU (from penetration to first elbow inclusive), and Jet Pump nozzle safe ends	Recirculation, RWCU, and Core Spray	Recirculation (I) RHR (I), RWCU (I)*, and Core Spray (I)
Monticello	263	Recirculation and associated safe ends and RHR (small portion to facilitate pipe removal)		
Quad Cities 2	265	RWCU (inboard isolation valve to drywell penetration)	Recirculation and RHR (suction and return)	Recirculation (M&I)
Vermont Yankee	271	Recirculation and RHR (SST portions)		
Peach Bottom 2	277	Recirculation, RHR (suction, return, and reactor head spray), RWCU (from RHR tee in drywell to beyond 2nd isolation valve MO-18), and Core Spray "A" and "B" (Only 5 nonconforming welds from 4 systems)	RWCU	
Peach Bottom 3	278	Recirculation (including 4 nozzle safe ends), RHR (supply and return), and RWCU (portion)	RWCU and Jet Pump Instrumentation Nozzle	
Pilgrim	293	Recirculation	Jet Pump Instrumentation Nozzle	
Cooper	298	Recirculation, RHR, RWCU, and Core Spray (All IGSCC susceptible piping welds replaced including associated safe ends and Jet Pump Instrumentation safe ends)	RWCU and Core Spray	Recirculation (I) and Core Spray safe ends (I)

Table 3-10. (continued).

Plant Name	Docket Number	Response To IGSCC Concerns: Piping Systems Replaced	Systems With Weld Overlays	Systems Using MSIP (M) or IHSI (I)
Hatch 1	321	RWCU (From RHR connection in drywell to penetration)	Recirculation, RHR, and RWCU	Recirculation (I)
Brunswick 2	324	RWCU (From RHR connection in drywell to outboard isolation valve 2-G31-F004)	Recirculation and Jet Pump Instrumentation Penetration Seal	Recirculation (M&I), Recirculation RPV Nozzles (M), RHR (I), Core Spray (M), and Jet Pump Instrumentation (M)
Duane Arnold	331		Recirculation	Recirculation (I)
FitzPatrick	333	Core Spray "B" and safe end (in drywell)	Recirculation and "B" Jet Pump Instrumentation Nozzle	Recirculation (I)

Notes:

Only inside containment (inside drywell) responses considered where possible to distinguish.

MSIP: Mechanical Stress Improvement Process—"uses a hydraulic system to uniformly compress the entire pipe at a location near the weld joint. It also causes slight plastic strain, and the residual stresses remaining after the treatment are compressive in the location susceptible to IGSCC because of weld sensitization."

IHSI: Induction Heating Stress Improvement—"consists of heating the outside of the pipe by induction coils to controlled temperatures [≈800°F (427°C) while cooling water is circulated inside the pipe. The high gradients produce the same effect as HSW. The inside of the pipe is plastically strained in tension during the process, causing residual compressive stresses after the process is completed."

*HSW: Heat Sink Welding—"a method of butt welding pipes or fittings in which the major portion of the weld is produced with cooling water inside the pipe. The cooling effect of the water minimizes the sensitization caused by the welding process, and in addition, produces a steep temperature gradient through the pipe wall during welding. This steep temperature gradient causes tensile thermal stresses on the inside of the pipe to exceed the yield strength of the material. After the welding is completed and the weldment is cooled, the inner portion of the weld is under high compressive residual stress. This is the opposite of what is caused by normal welding. The high compressive stresses are maintained through about half the wall thickness. The combination of reduced sensitization and high beneficial residual stresses provides significant resistance to IGSCC." Based on the available documentation, this was utilized on the Browns Ferry Unit 2 RWCU system only.

Quoted definitions are from NUREG-0313, Rev 2.

including residual heat removal (RHR), reactor water cleanup (RWCU), core spray, and jet pump instrumentation nozzles, have also demonstrated IGSCC concerns at various plants. Some units replaced these piping systems (or portions thereof) while other units made repairs using weld overlays. Many of the previously mentioned piping systems have also undergone stress improvement techniques, either IHSI or MSIP, at one or more of the SEP-III BWR plants. A great majority of high-energy piping systems constructed with austenitic stainless steel materials have indicated some level of IGSCC concern at one or more of the SEP-III BWR units. A variety of efforts have been undertaken to mitigate the effects of IGSCC.

3.3 Review of Representative Non-SEP Plant UFSARs and Related SERs

The non-SEP plants were licensed after the SEP-III plants and are generally of a later design. Plants representing each of the major NSSS vendors and their containment designs were selected for a data search and review. Similar to the approach used with previous groups, we sought information relating to the effects of pipe breaks inside containment and related topics. The units reviewed were as follows:

Diablo Canyon 1	(Westinghouse NSSS, dry ambient containment)
Crystal River 3	(B&W NSSS, dry ambient containment)
Arkansas Nuclear 2	(Combustion Engineering NSSS, dry ambient containment)
McGuire 1	(Westinghouse NSSS, ice condenser containment)
Millstone 3	(Westinghouse NSSS, subatmospheric containment)
Browns Ferry 3	(GE NSSS, Mark I containment)

Since SER information for the St. Lucie 2 and Hatch 2 plants was readily available, they were added to the SER review information discussed below.

The non-SEP plants are similar to the SEP-III plants, but were evaluated by the NRC using an early version of the Standard Review Plan (SRP) as the uniform acceptance criteria. We hoped that reviewing the available UFSAR and SER descriptions of the design provisions utilized by these newer plants might provide additional information regarding possible differences between the more recently licensed plants and the older SEP-III plants.

3.3.1 Information Gathering Process

Because of the more recent timeframe that the original non-SEP FSARs were generated, both the UFSARs and relevant SERs for the selected plants were reviewed. Experience gained from the SEP-III reviews (Section 3.2) indicated that obtaining the latest version of the UFSAR from the NUDOCS microfiche was a significant time investment. That experience also indicated that the information in the latest version of the UFSAR typically did not change substantially from the first UFSAR version. Therefore, we decided to review hard-copy versions of the UFSARs (though not necessarily the latest update).

Experience from the earlier SEP-III reviews clearly indicated that the relevant SERs containing NRC evaluations of inside-containment pipe-break designs for non-SEP plants were typically written to support the issuance of the operating license. These licensing SERs for the non-SEP plants were typically written in the 1974 to 1978 timeframe. The Browns Ferry licensing SER was written in mid-1972 for all three of the Browns Ferry units. We located historical documentation dating from the 1960s and 1970s (in microfiche format) for many of the NRC dockets. Supplements to the licensing SERs were included in the review when available.

3.3.2 Results of Reviews

Table 3-11 summarizes the results obtained from the review of the non-SEP UFSARs. Except for the Crystal River 3 and Browns Ferry 3 plants, the information presented in the UFSARs reviewed was in a format consistent with the Standard Review Plan. This reduced the amount of searching required to obtain information. As one would expect, the extent of this information varied from plant to plant, with the desired information being sparse or difficult to find in a few cases. However, when taken as a whole, the UFSARs for this group contained more extensive descriptions of the criteria used to designate high- and moderate-energy piping systems, the analysis techniques used in their qualification, how the postulated break locations were determined, and the plant design provisions (e.g., pipe whip restraints, physical barriers, etc.) that were employed to mitigate the effects of a pipe break event.

Tables 3-12 and 3-13 summarize all of the comments related to pipe breaks inside containment contained in the licensing SERs for this group of plants. Table 3-12 addresses the BWR plants, while Table 3-13 provides commentary on the PWR plants. Excluding Browns Ferry 3 (due to its early evaluation timeframe), virtually all of the non-SEP plants used RG 1.46 criteria. The only new comments were associated with the PWR SERs. Statements were made in two licensing SERs that the concrete foundations were designed for high-energy line break (HELB) loads. Any further inside-containment pipe-break information (including current status) would have to be obtained by contacting each specific plant.

3.3.3 Conclusions

In general, the most obvious conclusion determined from all of the non-SEP plant reviews was that little changed between the latter-timeframe SEP-III plants and the non-SEP plants reviewed. Although a more detailed design effort and NRC evaluation effort was probably involved, it was not readily apparent that any significant design changes resulted when compared to the later SEP-III plants.

3.4 Plant Visit Observations

The planned work scope for this project included a number of visits to SEP-III plant sites. The purpose of the plant visits was to obtain information from direct observation of the relative locations of representative high- and moderate-energy piping systems, equipment important to plant safety, and the measures taken to mitigate the effects of pipe breaks. Walkdowns would be made and, where possible, pictures taken to document the observations made. Qualitative judgements regarding the general susceptibility of the SEP-III plants' equipment to damage resulting from pipe ruptures or jet impingement would then be made.

The criteria used to select plants for possible visits included a number of factors. These included:

Plant availability based on scheduled outages

Plant licensing date (a distribution of SEP-III plants was desired)

Plant data availability.

The observations made during the plant visits that were completed during this phase of the project are described below. All visits were made prior to 1995 with the exception of Vermont Yankee, which was visited in 1998.

One general observation resulting the review of UFSAR and SER information is that not all plants defined high-energy systems the same. Some plants used minimum values for both temperature and pressure [e.g., 200°F <u>and</u> 275 psig (93°C <u>and</u> 1.9 MPa)] while other plants used minimum values of only one parameter [e.g., 200°F <u>or</u> 275 psig (93°C <u>or</u> 1.9 MPa)] to define high-energy systems. This difference in selection criteria has the potential to omit some piping systems when the minimum value of only one parameter is used. An example would be a cold high-pressure system such as the CRD piping in a BWR.

Table 3-11. Review of non-SEP plant UFSARs.

	Flood Protection	Missile/Jet Protection	Pipe Rupture Consideration						Environmental Qualification[a] Electrical and Instrumentation					Separation	
						UFSAR Commitment			UFSAR Commitment					UFSAR Commitment	
Plant Name	Pipe Rupture Considered	Pipe Rupture Considered	Considered	Specific Locations Identified	Physical Plant Protection	RG 1.46	SRP 3.6.1 3.6.2	Other Plant Specific	IEEE 279 1968	IEEE 279 1971	IEEE 323 1974	RG 1.89	Other Plant Specific	RG 1.75	Other Plant Specific
Millstone 3	Yes	Yes	Yes	Yes	Yes	X	X				X	X		X	
Browns Ferry 3	No (b)	Yes (c)	Yes	No	Yes (d)			X					X		X (e)
Diablo Canyon 1	Yes (c)	No (f)	Yes	Yes	Yes	X(g)							X		X (e)
Crystal River 3	No	Yes (c)	Yes	Yes	Yes (d)			X					X		X (e)
ANO 2	No	Yes (c)	Yes	Yes	Yes	X					X (h)				X (e)
McGuire 1	Yes (c)	Yes	Yes	Yes	Yes	X (i)					X (h)				X (e)

Notes:

a. All plants had to satisfy the NRC regarding RG 1.97 (or the intent of it via GL 82-33) and had to satisfactorily respond to IE-79-01B.

b. No specific mention found in UFSAR

c. Minimal information provided. UFSAR did not address impingement on electrical and mechanical equipment in detail.

d. Minimal information provided.

e. Vague mention of physical separation. Minimal definitive guidelines provided.

f. Section 3.5 of the UFSAR states that catastrophic failure of piping leading to missile generation is an incredible event.

g. Used criteria in Westinghouse WCAP-8082 report to determine RCS break locations. These locations were subsequently compared (and shown equivalent to) those that would have been determined by the RG 1.46 criteria. Used RG 1.46 for all other systems inside containment.

h. Used IEEE 323-1971.

i. Special criteria used for RCS only. This resulted in break locations similar to what would have been determined by using RG 1.46 criteria. Used RG 1.46 for all other systems inside containment.

Table 3-12. Review results from non-SEP BWR SERs.

Plant Name (SER Date)	Missiles Considered	Design Considerations for Structures, Systems, and Components Subjected to Pipe Break Effects					
		Containment Shell [a]	Containment Penetration	Recirc.	Main Steam	Feedwater	Other
Browns Ferry 3 (6-72)	Containment OK. Recirculation pumps with overspeed prevention make missiles low probability	Jet impingement adequate and protective cover for MS, FW, and RHR breaks installed on lower spherical portion	Jet protection barriers provided for large pipe penetration, reaction forces OK	Pipe whip restraints added	More ISI	More ISI	More ISI on RHR (another unrestrained line).
Hatch 2 (5-78)[b]	No missile can penetrate containment, separation and redundancy used for safety related systems and components, no special missile barriers necessary, standard plant Category I structures still utilized as missile shields, recirculation pumps without decoupler makes missiles a concern	Jet impingement adequate, internal Category I structures adequate for jet impingement, differential pressure, reaction forces, and pipe whip					Pipe break evaluations per RG 1.46. Effects from pipe breaks and crack, including pipe whip, jet effect, and environmental effect considered.

Notes:

a. Containment designs are all free standing steel primary containments with a surrounding concrete reactor building.

b. Not SER but NRC report to ACRS.

Table 3-13. Review results from non-SEP PWR SERs.

Plant Name (SER Date)	Missiles Considered	Design Considerations for Structures, Systems, and Components Subjected to Pipe Break Effects					
		Containment Shell	Cont. Pen.	RCS Loop	Main Steam	Feedwater	Other
Millstone 3 (3-74)	Category I structures and components adequately designed for missiles with no loss of function of safety related systems and components in such structures	Jet impingement adequate, internal structures OK for missile impact and jet impingement		RCS evaluated per WCAP 8082 equivalent to RG 1.46			Pipe break evaluations per RG 1.46.
Crystal River 3 (7/74)	Category I structures adequately designed for missiles with no loss of function of safety related systems and components protected by such structures	Containment designed for accident induced loads, internal structures OK for differential pressure and accident induced loads					Criteria used for RCS breaks acceptable to staff. Breaks assumed at any location. Piping restraints applied to RCS.
Diablo Canyon 1 (10/74)	Category I structures, systems, and components adequately designed for missiles with no loss of function, RCS pump adequately designed and appropriate ISI used so no missile concern	Containment designed for pipe rupture effects including reaction, jet impingement, and pipe whip, internal structures OK for differential pressure, reaction loads, pipe whip, and jet impingement, concrete foundations designed for HELB loads					Pipe break evaluations equivalent to RG 1.46.
St. Lucie 2 (11/74)	Plant structures and components adequately designed for missiles with no loss of function of safety related systems and components in such structures	Containment designed for pipe rupture effects, containment vessel protected by Category I secondary shield wall, internal structures OK for pressure and jet impingement					Pipe break evaluations per RG 1.46.

Table 3-13. (continued).

Plant Name (SER Date)	Missiles Considered	Design Considerations for Structures, Systems, and Components Subjected to Pipe Break Effects					
		Containment Shell	Cont. Pen.	RCS Loop	Main Steam	Feedwater	Other
ANO 2 (11/77)	Category I structures, systems, and components adequately designed for missiles with no loss of function of safety related systems and components in such structures	Containment designed for pipe rupture effects, internal structures OK for differential pressure, reaction loads, pipe whip, and jet impingement, concrete foundations designed for HELB loads		RCS evaluated per CE report CENPD-168			Pipe break evaluations per RG 1.46. ANSI-N176 (draft 3) also referenced.
McGuire 1 (3/78)	Category I structures, systems, and components adequately designed for missiles with no loss of function of safety related systems and components	Containment designed for accident loads, internal structures OK for differential pressure, reaction loads, and jet impingement					Pipe break evaluations per RG 1.46.

Note:

a. Containment designs are all concrete with steel liners except for St. Lucie 2 and McGuire 1 which are free-standing steel containments with a concrete shield building.

3.4.1 Trojan Nuclear Power Plant

This plant is a four-loop PWR using a Westinghouse nuclear steam supply system (NSSS). The general arrangement of the NSSS is as shown in Figure 3-1. The plant entered commercial operation in May 1976 and operated for approximately 15 years before being permanently closed by the licensee. A number of considerations influenced the selection of this plant for visitation. These included:

1. The plant is representative of many using a four-loop Westinghouse NSSS.

2. The current plant status provided great flexibility in access and opportunities for close observation of systems, structures, and components.

3. The plant's design, construction, and licensing review occurred late in the group of plants included in the SEP-III category; therefore, the consideration of pipe break effects was more complete than that in some earlier SEP-III plants. This provided a good baseline for comparison to other PWRs that would be reviewed during this research program.

Before visiting the plant, we reviewed the UFSAR, the SER, and a subsequent supplement to obtain an overall understanding of the pipe break considerations contained in the plant's licensing basis.

High-energy piping is defined in the Trojan UFSAR as any piping that contains a fluid having a pressure of 275 psig (1.9 Mpa) or greater, or a temperature of 200°F (93°C) or greater. The need to consider the effects of pipe breaks in the RCS have been eliminated at the Trojan plant by the application of leak-before-break (LBB) technology. However, breaks were postulated in steam, feedwater, and RCS branch lines. A combination of restraints, barriers, and physical layout considerations were used with the purpose of limiting the propagation of any RCS branch line, steam, or feedwater line break. Similarly, these same measures were used to limit the effects of jet impingement and pipe whip subsequent to a postulated break.

Before the inside-containment walkdown, licensee personnel provided drawings showing the layout of high-energy piping systems and the restraints that were installed to mitigate the effects of a postulated high-energy pipe break. Discussions were also conducted regarding the location of safety-related equipment and electrical equipment. These discussions enabled us to select representative piping systems, equipment, and general containment areas for direct observation. The systems and equipment that we observed during the walkdown included:

1. Main steam piping from the containment penetration area to the steam generators (A and D loops)

2. Feedwater piping from the containment penetration area to the steam generators (A and D loops)

3. RHR supply and return piping at the containment penetration area (penetrations P-9, P-46, and P-47, respectively)

4. Accumulator injection piping near the A, B, and C accumulators

5. Accumulator injection (safety injection) line inside the B loop cubicle near the connection to the RCS cold leg

6. Low-head safety injection piping inside the B loop cubicle up to the connection to the hot leg piping

7. Pressurizer surge piping from the pressurizer to the connection with the RCS hot leg in the B loop cubicle

8. Pressurizer spray piping in the pressurizer cubicle

9. Pressurizer safety and relief discharge piping in the area at the top of the pressurizer and pilot operated relief valve (PORV) accumulators, PORV, and block valve piping

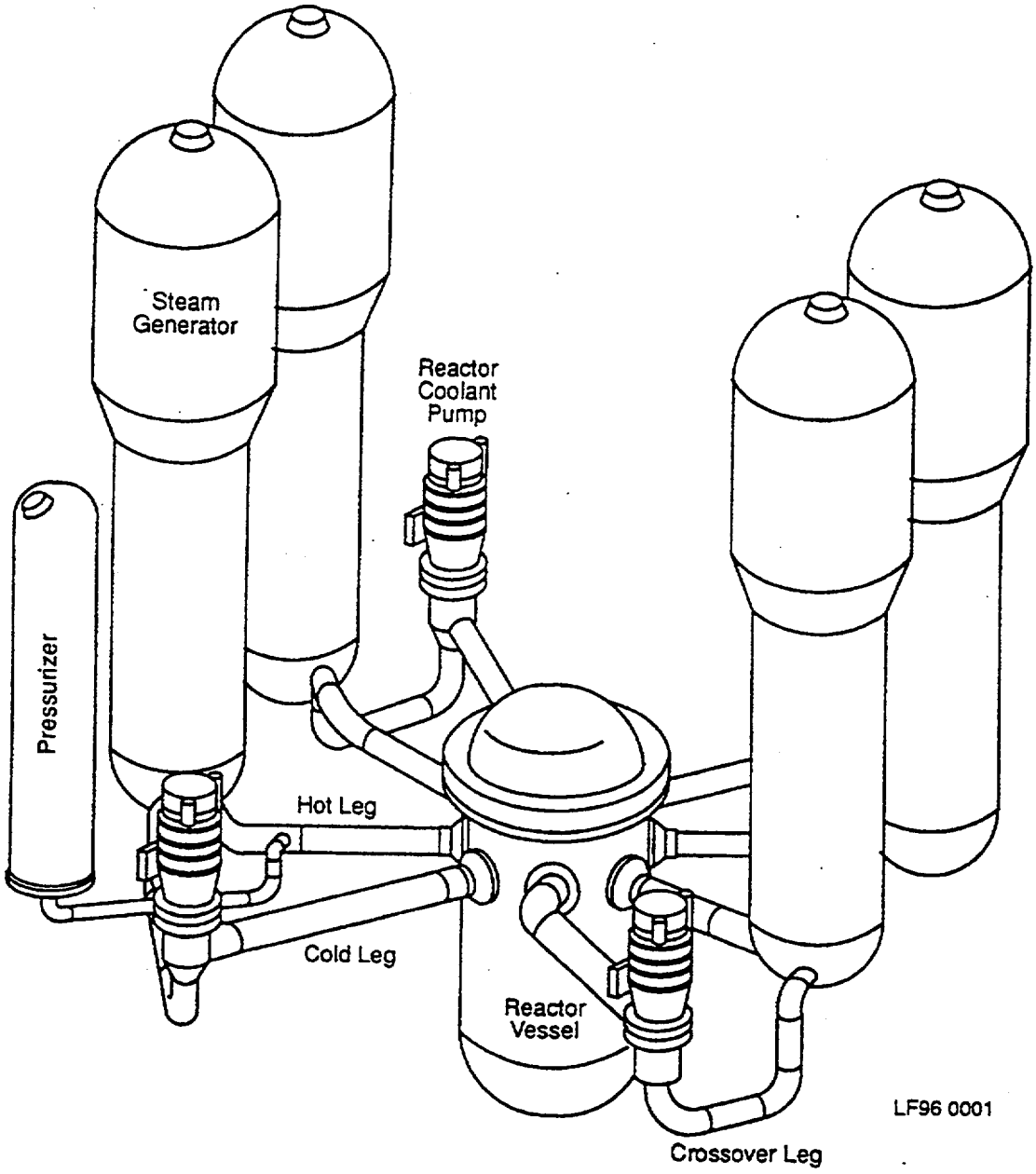

Figure 3-1. General arrangement of a Westinghouse four-loop NSSS.

10. Normal charging piping near containment penetration P-8 and the regenerative heat exchanger

11. Electrical cable penetrations in the northwest quadrant of the containment wall.

The general walkdown methodology that we followed was to go to the selected area or piping system and follow the system to the desired end point. As the system was being followed, observations were made regarding the system restraints, nearby systems and/or equipment, jet impingement shielding, etc. The major observations resulting from this effort can be summarized as follows:

1. During the review of the drawings and the walkdown itself, it was observed that this plant was designed with a high degree of compartmentalization. This design approach contributes to the physical separation of systems and equipment that help mitigate the effects of a postulated pipe break in any one loop of the RCS or the high-pressure piping connected to any loop.

2. Examples of the large whip restraints indicated on the drawings were observed during the plant walkdown as were the other features of interest identified by the drawing review. Although this was not a detailed walkdown to verify exact support configurations or locations, the locations and configurations of the supports were observed to be in general agreement with those shown on the drawings.

3. Most importantly, the inside-containment walkdown provided the opportunity to observe first-hand the relative placement of piping, components, and other equipment to obtain a sense of the potential for damage due to a postulated pipe break. We observed that the physical separation provided by the high degree of compartmentalization combined with the pipe restraints near postulated break locations should be effective in reducing the severity of the effects of a postulated pipe break.

4. We observed a minimum of jet impingement shielding of individual items (e.g., electrical boxes). This did not seem unwarranted given the degree of physical separation, redundancy, and the number of supports mentioned above. However, components were observed in the pressurizer compartment that appeared susceptible to jet loads from pipe breaks in that part of the compartment. Two examples are electrical boxes that are mounted on the walls near the elevations of the pressurizer safety valves, and the PORV accumulators that are mounted to structural steel supports near the top of the pressurizer compartment. Later we performed an additional review of information contained in the licensee's UFSAR. This analysis indicated that the piping was sufficiently restrained to meet their criteria for limiting the propagation of damage that would prevent a reactor shutdown in the event of a high-energy pipe rupture.

5. Our review of the plant drawings showed a concentration of electrical penetrations in the northwest quadrant of the containment (near the "D" RCS loop). During the in-plant walkdown, we observed these electrical penetrations and the general area of the containment. We noted that the main steam and feedwater piping for the "A" and "D" loops were also routed in this area. Few pipe whip restraints existed in this area. It appeared that the possibility existed for jet impingement loads and/or impact loads to occur on either some of the electrical penetrations or the cable trays if a steam or feedwater pipe ruptured in this area. Section 3.6.4.2 of the UFSAR only states that the containment wall and liner plate are not protected from the effects of a steam or feedwater break; however, the steam/feedwater lines to each loop are physically separated by a concrete slab so that they could not impact each other. This would satisfy the criterion of not allowing the effects of a

break in one loop to propagate to another loop if only the piping were considered. Section 3.6.1.3 of the UFSAR states that, "The jet impingement forces inside containment from postulated breaks are insufficient to damage structures or safety-related piping to preclude a safe shutdown." While this does not address physical impact or jet impingement on the electrical penetrations or cable trays, the UFSAR further states, "The important ESF Electrical System consists of redundant elements designed to provide reliable power for all necessary equipment during even the most severe emergency situations, including jet impingement. Electric isolation and physical separation of cables and equipment associated with redundant elements of the ESF ensure this reliability." Our in-plant observations indicate that further information would be necessary to verify that sufficient separation and isolation of electrical cables does exist in this concentrated area of cabling near the penetrations.

6. We observed a minimal number of jet impingement shields installed in the areas of the containment that were examined during our walkdown. Given the licensee's stated approach (e.g., UFSAR Section 3.6.1.1) of using whip restraints, barriers, and physical separation to reduce the effects of a high-energy pipe break, this lack of jet impingement shields may not be unusual.

3.4.2 Browns Ferry Nuclear Power Plant, Unit 3

This plant is a General Electric BWR-4 design with a Mark I containment. A general arrangement elevation view of the NSSS is shown in Figure 3-2. The plant entered commercial operation in March 1977 and operated for approximately 8 years before being temporarily closed by the licensee. At the time of the plant visit, the plant was undergoing regulatory review for an expected restart of commercial operation in early 1996. A number of considerations influenced the selection of this plant for visitation. These included:

1. The current plant status provided flexibility in access and opportunities for close observation of systems, structures, and components.

2. The plant is representative of the combination of the BWR-4 NSSS and Mark I containment design that comprise the majority of the population of BWR plants currently in operation.

3. While Browns Ferry Unit 3 is listed as a non-SEP-III plant, its design and construction are sufficiently similar to Browns Ferry Units 1 and 2 (which are SEP-III plants) and other SEP-III BWRs that it provides a good baseline for comparison to other BWRs that will be reviewed during this research program.

Before visiting the plant, we reviewed the UFSAR, the licensing SER, and two supplements to obtain an overall understanding of the pipe break considerations contained in the plant's licensing basis.

High-energy piping is defined in the Browns Ferry UFSAR as any piping that contains a fluid having a pressure greater than 275 psig (1.9 Mpa) and a temperature greater than 200°F (93°C). Breaks were postulated in steam, feedwater, recirculation, and other piping systems and branch lines that met the defining criteria. A combination of restraints, barriers, and physical layout considerations were used with the purpose of limiting the propagation of any RCS branch line or steam or feedwater line break. Similarly, these same measures were used to limit the effects of jet impingement and pipe whip subsequent to a postulated break.

Before we conducted the inside-containment walkdown, licensee personnel provided drawings showing the layout of high-energy piping systems and the restraints that were installed to mitigate the effects of a postulated high-energy pipe break. Discussions regarding the location of

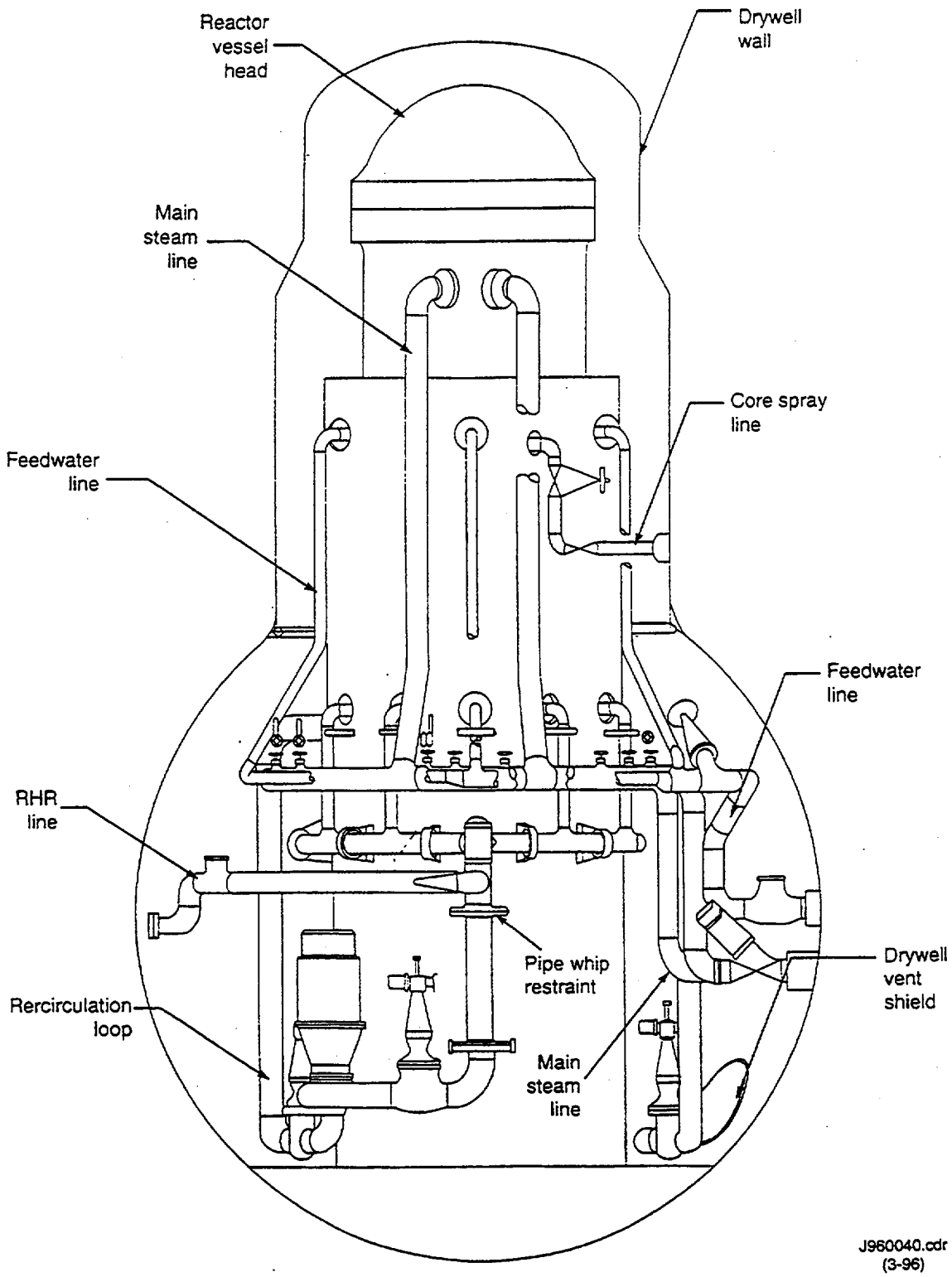

Figure 3-2. General arrangement of a General Electric NSSS with Mark I drywell.

safety-related mechanical and electrical equipment were also conducted. These discussions enabled us to select representative piping systems, equipment, and general containment areas for direct observation. The systems and equipment that we observed during the walkdown included:

1. The main steam system from the drywell penetrations X-7A and X-8A up to the horizontal runs at the 584-ft (178-m) elevation. The two main steam risers located in the area of the 90° azimuth (plant coordinates) were also observed and photographed. This also included several pipe whip restraints that were mounted on the system.

2. The feedwater system beginning at penetration X-9A up to the horizontal runs at the 584-ft (178-m) elevation. The three 12-in. (0.3 m) risers ascending from the horizontal run in the area of the 30–150° plant azimuth range were also observed. This also included several pipe whip restraints that were mounted on the system.

3. Energy absorbing pads mounted to the drywell wall were observed in several locations. They were not continuous.

4. Portions of the recirculation system (loop located in the plant azimuth range of 0–180°) were examined. This included the 28-in. (0.7 m) suction line in the area of the reactor vessel nozzle and the header and riser pipes above the 584-ft (179-m) elevation. Whip restraints associated with this system were examined.

5. Electrical junction boxes located near the piping systems of interest were included in the walkdown.

6. The locations of cable trays relative to the high-energy systems mentioned above were observed.

7. The CRD piping bundle at approximately the 300° azimuth in the vicinity of the "A" recirculation pump and discharge piping was examined.

The general walkdown methodology that we followed was to go to the selected area or piping system and, to the extent possible, follow the system to the desired end point. As the system was being followed, observations were made regarding the system restraints, nearby systems and/or equipment, jet impingement shielding, etc. Due to the limitations of physical space and certain radiological access restrictions, some parts of systems of interest could not be walked down in their entirety; however, most of the inaccessible areas could be viewed from a distance. This still allowed for general observations of structures, systems, and components in close enough proximity to be potential targets of pipe whips and/or jet loads from a pipe rupture event. The major observations resulting from this effort can be summarized as follows:

1. During the review of the drawings and the walkdown itself, we observed that this plant was designed with a minimum compartmentalization inside the drywell. This is a generic design feature of the Mark I containment in that the compactness of the drywell piping layout affords minimal space for compartment walls. This results in many of the high-energy systems being close to each other.

2. Examples of the large whip restraints indicated on the drawings were observed during the plant walkdown as were the other features of interest identified by the drawing review. Although this was not a detailed walkdown to verify exact support configurations or locations, the locations and configurations of the supports were observed to be in general agreement with those shown on the drawings.

3. The inside-containment walkdown provided the opportunity to observe first-hand the relative placement of piping, components, and other equipment to obtain a sense of the potential for damage due to a postulated pipe break. We observed that the minimal amount of

physical separation and compartmentalization allowed by the drywell physical volume constraints would put more emphasis on the use of whip restraints, conservative design practices, or other measures to mitigate the effects of a high-energy line break event.

4. A minimum of jet impingement shielding of individual items (e.g., electrical boxes or cable trays) was observed.

5. The CRD piping bundle that was observed during the walkdown had no physical barriers separating it from other high-energy piping systems in the general area. Each CRD pipe is 1-in. (25-mm) nominal size, which would exempt it from consideration of pipe break locations under the RG 1.46 guidelines. However, our concern was that one of the CRD bundles could be a target for a larger pipe. Portions of the recirculation pump discharge piping are in the same general area as the CRD bundle. Since multiple CRD piping bundles are used to complete the total system, some level of damage or loss of individual lines can be sustained before the ability to shut down the reactor would be compromised. Further investigation will be needed to ascertain the level of separation in the individual pipes within each bundle to assess whether effective physical separation is achieved and what level of damage could be sustained.

6. Our review of plant drawings showed that the safety-related electrical penetrations appeared to have a high degree of physical separation. Typically, these systems are redundant with one "train" entering the drywell through a separate penetration while the other train enters through a separate penetration located on the other side (usually about 180° away) of the drywell shell. This layout should help minimize the deleterious effects of a pipe break on safety-related electrical system functions.

3.4.3 Quad Cities Nuclear Power Plant, Unit 2

This plant is a General Electric BWR-3 design with a Mark I containment. The general arrangement of the major components inside the containment (drywell) is similar to that shown in Figure 3-2. The plant entered commercial operation in April 1972. The same considerations influenced the selection of this plant as for those previously selected for visitation. These included:

1. The plant was shut down for a refueling outage and thus provided flexibility in access and opportunities for close observation of systems, structures, and components.

2. The plant is representative of an early vintage of the BWR NSSS and Mark I containment design.

3. The plant's design and construction features are sufficiently similar to other SEP-III BWRs that it provides a good base line for comparison to other BWRs that will be reviewed during this research program.

Prior to visiting the plant, the UFSAR and licensing SER were reviewed prior to the visit to obtain an overall understanding of the pipe break considerations contained in the plant's licensing basis.

High-energy piping is defined in the Quad Cities UFSAR as any piping that contains a fluid having a pressure greater than 275 psig (1.9 Mpa) and a temperature greater than 200°F (93 C). Breaks were postulated in steam, feedwater, recirculation, and other piping systems and branch lines that met the defining criteria. A combination of restraints, barriers, and physical layout considerations were used with the purpose of limiting the propagation of any RCS branch line or steam or feedwater line break. Similarly, these same measures were used to limit the effects of jet impingement and pipe whip subsequent to a postulated break.

Before the inside-containment walkdown, licensee personnel provided drawings showing the layout of high-energy piping systems and the restraints that were installed to mitigate the effects of a postulated high-energy pipe break. Discussions regarding the location of safety-related mechanical and electrical equipment were also conducted. These discussions enabled us to select representative piping systems, equipment, and general containment areas for direct observation. The systems and equipment that were observed during the walkdown included:

1. The main steam system from the drywell penetrations up to the horizontal runs.

2. The feedwater system beginning at the drywell penetration up to the horizontal runs.

3. A continuous section of energy-absorbing pads mounted to the drywell wall were observed.

4. Portions of the recirculation system were examined. This included the 28-in. (0.7 m) suction line in the area of the reactor vessel nozzle and the header and riser pipes. Whip restraints associated with this system were examined.

5. Electrical junction boxes located in proximity to the piping systems of interest were included in the walkdown.

6. The locations of cable trays relative to the high-energy systems mentioned above were observed.

7. The control rod drive (CRD) piping bundles were examined. In several locations additional supports had been added to the bundles from what we had observed on the Browns Ferry plant. One vertical run of the bundle was location in very close proximity to RHR piping.

The general walkdown methodology that was followed was to go to the selected area or piping system and, to the extent possible, follow the system to the desired end point. As the system was being followed, observations were made regarding the system restraints, nearby systems and/or equipment, jet impingement shielding, etc. Due to the limitations of physical space and certain radiological access restrictions, some parts of systems of interest could not be walked down in their entirety; however, most of the inaccessible areas could be viewed from a distance. This still allowed for general observations of structures, systems, and components in close enough proximity to be potential targets of pipe whips and/or jet loads from a pipe rupture event. The major observations resulting from this effort can be summarized as follows:

1. During the review of the drawings and the walkdown itself, it was observed that this plant was designed with a minimum compartmentalization inside the drywell. This is a generic design feature of the Mark I containment in that the compactness of the drywell piping layout affords minimal space for compartment walls. This results in many of the high-energy systems being in relatively close proximity to each other.

2. Examples of the large whip restraints indicated on the drawings were observed during the plant walkdown as were the other features of interest identified by the drawing review. Although this was not a detailed walkdown to verify exact support configurations or locations, the locations and configurations of the supports were observed to be in general agreement with those shown on the drawings.

3. The inside-containment walkdown provided the opportunity to observe first hand the relative placement of piping, components, and other equipment to obtain a sense of the potential for damage due to a postulated pipe break. It was observed that the minimal amount of physical separation and compartmentalization allowed by the drywell physical volume constraints would put more emphasis on the use of whip restraints, conservative design practices, or other measures to mitigate the effects of a high-energy line break event.

4. A minimum of jet impingement shielding of individual items (e.g., electrical boxes or cable trays) was observed.

5. The CRD piping bundles observed during the walkdown had no physical barriers separating them from other high-energy piping systems in the general area. At one location, CRD bundles were directly adjacent to, and on either side of a section of RHR piping. Each CRD pipe is 1-in. (25-mm) nominal size, which would exempt it from consideration of pipe break locations under the RG 1.46 guidelines. However, our concern was that one of the CRD bundles could be a target for a larger pipe. Portions of the recirculation pump discharge and RHR piping are in the same general area as the CRD bundle. Since multiple CRD piping bundles are used to complete the total system, some level of damage or loss of individual lines can be sustained before the ability to shut down the reactor would be compromised. Further investigation will be needed to ascertain the level of separation in the individual pipes within each bundle to assess whether effective physical separation is achieved and what level of damage could be sustained.

6. The safety-related electrical penetrations were spaced around the circumference of the drywell. We did not have sufficient information to determine whether the redundant trains had been sufficiently physically separated.

3.4.4 H. B. Robinson Nuclear Power Plant, Unit 2

This plant is a three-loop PWR using a Westinghouse nuclear steam supply system (NSSS). The plant has been operating over 20 years. The containment is a prestressed concrete, large-dry design, with the inside surface of the containment lined with steel plates.

A number of considerations influenced the selection of this plant for visitation. These included:

1. The plant is representative of a three-loop Westinghouse NSSS.

2. The plant was undergoing a scheduled shutdown, providing us the opportunity for close observation of systems, structures, and components.

3. The plant's design, construction, and licensing review occurred early in the group of plants included in the SEP-III category; therefore, the consideration of pipe break effects was more incomplete than that in some later SEP-III plants. This provided a good base line for comparison to other PWRs that would be reviewed during this research program.

Before visiting the plant, the UFSAR, the SER, and a subsequent supplement were reviewed to obtain an overall understanding of the pipe break considerations contained in the plant's licensing basis.

High-energy piping is defined in the H. B. Robinson UFSAR as any piping that contains a fluid having a pressure of 275 psig (1.9 MPa) or greater, or a temperature of 200°F (93°C) or greater. The need to consider the effects of pipe breaks in the RCS have been eliminated at the H. B. Robinson plant by the application of leak-before-break (LBB) technology.

Before the inside-containment walkdown, licensee personnel provided drawings showing the layout of high-energy piping systems and the restraints that were installed to mitigate the effects of a postulated high-energy pipe break. In addition, the licensee had a training video of inside containment, which we viewed for about two hours before entering the containment. A subcontractor had filmed much of the area, and by manipulating the computer, the operator was able to select components for visual review from different camera angles. A hard copy of the image on the computer screen could readily be

made by punching a button. This allowed us to view some piping that we would not have been able to view otherwise since it was covered with lead shielding during our visit. Our time inside containment was probably reduced because of the video images. Discussions regarding the location of safety-related equipment and electrical equipment were also conducted. These discussions enabled us to select representative piping systems, equipment, and general containment areas for direct observation. The systems and equipment that were observed during the walkdown included:

1. Reactor coolant system
2. Main steam piping from the containment penetration area to the steam generators
3. Feedwater piping from the containment penetration area to the steam generators
4. RHR supply and return piping at the containment penetration area
5. Accumulator injection piping
6. Pressurizer surge piping
7. Normal charging piping
8. Steam generator blowdown lines
9. Chemical and volume control system
10. Electrical cable penetrations.

The general walkdown methodology that we followed was to go to the selected area or piping system and follow the system to the desired end point. As the system was being followed, observations were made regarding the system restraints, nearby systems and/or equipment, jet impingement shielding, etc. The major observations resulting from this effort can be summarized as follows:

1. Westinghouse had asked the architect-engineer (Ebasco) in the late 1960s to ensure that the main steam piping, feedwater piping, and the reactor coolant system was restrained from pipe whip. In the containment area outside the crane support wall, the main steam and feedwater piping were far more restrained than these systems on the other PWR we visited (Trojan).
2. In contrast to the Trojan plant, H. B. Robinson Unit 2 had no whip restraints on the main steam and feedwater lines inside the crane wall near the steam generators. However, there were no targets in the area.
3. During the review of the drawings and the walkdown itself, we observed that this plant was designed with a high degree of compartmentalization. This design approach contributes to the physical separation of systems and equipment that help mitigate the effects of a postulated pipe break in any one loop of the RCS or the high-pressure piping connected to any loop.
4. Examples of the large whip restraints indicated on the drawings were observed during the plant walkdown as were the other features of interest identified by the drawing review. Although this was not a detailed walkdown to verify exact support configurations or locations, the locations and configurations of the supports were observed to be in general agreement with those shown on the drawings.
5. Most importantly, the inside-containment walkdown provided the opportunity to observe first-hand the relative placement of piping, components, and other equipment to obtain a sense of the potential for damage due to a postulated pipe break. We observed that the physical separation provided by the high degree of compartmentalization combined with the pipe restraints near postulated break locations should be effective in reducing the severity of the effects of a postulated pipe break.

6. A minimum of jet impingement shielding of individual items (e.g., electrical boxes) was observed. This did not seem unwarranted given the degree of physical separation, redundancy, and the number of supports mentioned above.

7. All balance-of-plant piping (excluding the main steam and feedwater lines) and the electrical penetrations entered the containment at approximately the same location, rather than spaced around the containment circumference. This design makes it far more likely that a high-energy line pipe break (or leak) at this location would damage electrical and instrumentation lines.

3.4.5 Vermont Yankee Nuclear Power Plant

The Vermont Yankee plant (BWR/4, Mark I steel containment) was visited with an NRC/NRR staff member who was studying pipe break effects associated with the reactor building closed cooling water (RBCCW) system. A pipe break associated with the RBCCW system had previously been identified as a potential problem by the Millstone 1 BWR licensee.

The following observations were made during the subject trip.

1. The RBCCW system is a low-temperature, low-pressure system that supplies cooling water to the drywell cooling system, the recirculation pumps seals, and the sump drains. We were informed that after a loss of RBCCW, the pump seals would rupture, resulting in a small-break loss-of-coolant accident (SBLOCA) in about 4 minutes. The portion of the piping outside containment was formerly classed as safety related, but in recent years the licensee had no longer kept up that classification. There is a single check valve separating the safety-related and non-safety-related portions of the RBCCW inside containment, and a single motor-operated valve separating the two portions outside containment.

2. In the event of a high-energy line break within containment, pipe whip or jet impingement could sever the RBCCW system. In the event of a single failure of one of the isolation valves, pressure inside containment could rise to about 40 psi and force water outside the containment through the RBCCW system. Since the RBCCW system outside containment is not classified as safety related, this system could rupture, resulting in a containment-to-atmosphere leak.

3. This problem had previously been identified at Millstone 1. From a discussion with the Millstone 1 licensing staff, the potential problem was identified when the plant was at 100% power (indicating that no new physical observation was made), during a design assessment of the drywell coolers. To ensure a containment-to-atmosphere leak could not occur through the RBCCW system, two remote isolation valves were placed on the RBCCW system outside containment to provide double valve isolation. Millstone 1 LER 89-003 and NRC Inspection Report 89-04 (May 11, 1989) document the Millstone discussion.

4. Specific note was taken of the RBCCW system inside containment. Portions of the recirculation system, the main steam and feedwater systems, the LPCI system, and the CRD insert and withdraw lines were also observed. Due to the maintenance being conducted, all portions of the drywell were not available for access.

5. Two bundles of the CRD 1-in. (25-mm) diameter pipes entered the containment on either side of the reactor. They were routed rather directly from the containment wall to the reactor, as compared with the Quad Cities and Browns Ferry BWRs previously toured. The piping appeared well supported. One recirculation line riser and the LPCI (RHR) line which connects with it were in the vicinity of the CRD lines. The RHR line was clamped so that pipe whip would not

occur. The LPCI line was supported but not clamped as well as the recirculation line. The recirculation line was about 10 to 15 ft (3 to 4.6 m) away from the CRD lines, in contrast to the Quad Cities design where the two systems were in virtual contact. Pipe whip or jet impingement damage to CRD lines from the LPCI line appeared to be less likely than in the other two BWRs.

6. Steel plates with corrugated backing had been placed on the lower portions of the drywell interior. In the areas toured, the lining appeared to be continuous. No portions were observed to have been removed.

7. The Vermont Yankee recirculation system was replaced several years ago because of IGSCC concerns. At that time, General Electric reanalyzed the piping from a SRP standpoint, and concluded some of the pipe whip restraints were no longer needed. We observed one restraint which had been partially removed. It appeared that the recirculation lines could only cause damage from jet impingement (which might result from longitudinal breaks through fishmouth openings).

8. We observed the RBCCW system at the 252 and 238 elevations. At elevation 252, RBCCW was routed to the drywell coolers. Only at one location did it appear tc be adjacent to high-energy piping. At this location, a main steam and a main feedwater line were in proximity. The main steam line was restrained at this location, and while we did not notice a restraint on the main feedwater line, it was blocked from impacting the RBCCW line by the main steam line. Jet impingement from the main steam line through a longitudinal break could impact the RBCCW line at this location. At elevation 238, the RBCCW was routed to the pump seals and the sump drains. A large section was routed along a portion of the recirculation piping. This recirculation piping had pipe whip restraints, but jet impingement through a longitudinal break could impact the RBCCW line. The recirculation pumps appeared to be well anchored; movement of the pumps could shear the RBCCW lines at the junction to the pump seal.

4. IDENTIFICATION OF A FIRST-LEVEL LIST OF POTENTIAL SEP-III CONCERNS

4.1 Introduction

Once the available background information (as discussed in Sections 2 and 3) was reviewed, it was possible to develop an initial or first-level list of concerns regarding inside containment pipe failures for the SEP-III plants.

Pipe failure, as defined herein, includes circumferential breaks in pipe greater than 1-in. (25 mm) NPS and longitudinal breaks (actually an axial split without pipe severance) in pipe 4-in. (102-mm) NPS and larger. The piping of interest is high-energy piping that has a design temperature greater than 200°F (93°C) and/or a design pressure greater than 275 psig (1.9 Mpa) (some plants use an "and" definition, while others use "or"). Moderate-energy pipeline (those piping systems not high-energy, including systems which are high-energy less than 2% of the time) failures result in through-wall leakage cracks, not breaks. Therefore, the consequence of a moderate-energy pipe failure is a fluid spray or dripping concern, which other NRC efforts have addressed. Consequently, moderate-energy line failures were not considered herein.

The initial task plan called for identifying those SEP-III plant pipe break locations that would have been expected to be postulated if adequately reviewed in accordance with the current SRP criteria. However, the background information obtained and reviewed did not contain the necessary level of detail to completely identify specific pipe break locations of concern. Some locations without pipe whip restraints, such as the Browns Ferry's Unit 3 main steam or feedwater lines at the reactor vessel nozzles (terminal ends), could be easily identified, but other locations could not be identified without the aid of the calculated design stresses. Therefore, by necessity, a systems approach rather than a specific-location approach was used to list the "first-level" inside-containment pipe-break concerns for the SEP-III plants.

Since a systems approach was to be used for pipe-break evaluations and not specific locations, the consideration of potential longitudinal breaks became unnecessary. Longitudinal pipe breaks result in fluid jet discharge without pipe severance in 4-in. (102-mm) pipe and larger. Circumferential pipe breaks include more piping [high-energy lines greater than 1-in. (25-mm) NPS] and more effects (fluid jet discharge, reaction loads, and pipe whip). Therefore, longitudinal breaks are covered by the circumferential pipe break evaluations.

To obtain an initial indication of what was not covered in the SERs, we reviewed the tables in Section 3 (which present the items listed in the SERs that have been addressed). From these, Tables 4-1 through 4-4 were developed. Tables 4-1 and 4-2 present an evaluation of early-, mid-, and later-timeframe SEP-III BWRs and PWRs, respectively. These tables give an overview of items missing from the commentary in the SERs. Tables 4-3 and 4-4 give plant-specific comments for each BWR and PWR SEP-III plant.

4.2 Criteria

The following criteria were used to develop the potential list of SEP-III concerns relating to high-energy pipe breaks inside containment.

1. Any high-energy piping system can experience a pipe break whether or not pipe whip restraints are installed.

2. Any one pipe break will not cause the loss of more than one other structure, system, or component (i.e., the postulated failure can cascade only one level down).

3. A ruptured piping system will only cause the failure of another piping system of the same nominal pipe size and lesser schedule or a piping system of smaller nominal diameter.

Table 4-1. Summary of commentary missing from SEP-III BWR SERs.

Plant Name	Missiles Considered	Were These Design Provisions Made for Those Systems and Components Subjected to Pipe Break Effects?					
		Cont.Shell	Cont. Pen.	Recirc.	Main Steam	Feedwater	Other
Early-timeframe plant	Are all Category I structures, systems, and components considered? Recirculation pumps with overspeed prevention?	Jet impingement OK? Protective cover for containment? Jet protection barriers for vent system? Internal structures OK for jet impingement, differential pressure, reaction forces, and pipe whip?	Jet protection barriers provided? Reaction forces OK?	Only Nine Mile Point 1 does not have whip restraints. More ISI?	Pipe whip restraints added? More ISI?	Pipe whip restraints added? More ISI?	Pipe break effects disable or degrade essential equipment? Biological shield OK (including shield plugs as missiles)? RV support structure OK? Should pipe whip restraints be on other HELB lines? More ISI at locations where restraints not installed? Can RHR damage containment? ECCS redundant? Can pipe ruptures in cylindrical portion of drywell perforate it?
Mid-timeframe plant	Are all Category I structures, systems, and components considered? Recirculation pumps with overspeed prevention?	Jet impingement OK? Jet protection barriers for vent system? Internal structures OK for jet impingement, differential pressure, reaction forces, and pipe whip?	Jet protection barriers provided? Reaction forces OK?		Pipe whip restraints added? More ISI?	Pipe whip restraints added? More ISI?	Pipe break effects disable or degrade essential equipment? Biological shield OK (including shield plugs as missiles)? RV support structure OK? Should pipe whip restraints be on other HELB lines? More ISI at locations where restraints not installed? Can RHR damage containment? ECCS redundant? Can pipe ruptures in cylindrical portion of drywell perforate it?
Later-timeframe plant	Are all Category I structures, systems, and components considered?	Jet impingement OK? Protective cover for containment? Jet protection barriers for vent system? Internal structures OK for jet impingement, differential pressure, reaction forces, and pipe whip?	Jet protection barriers provided? Reaction forces OK?				

Note:

a. Containment designs are all free-standing steel primary containments with a surrounding concrete reactor building, except for Brunswick 2, which is a steel-lined concrete primary containment with a surrounding concrete reactor building.

Table 4-2. Summary of commentary missing from SEP-III PWR SERs.

Plant Name	Missiles Considered	Were These Design Provisions Made for Those Systems and Components Subjected to Pipe Break Effects?					
		Cont. Shell	Cont. Pen.	RCS Loop	Main Steam	Feedwater	Other
Early-timeframe plant	Are all Category I structures, systems, and components considered as well as all appropriate sources? Is the RCS pump a missile concern?	Jet impingement or pipe whip OK? Internal structures OK for jet impingement, differential pressure, reaction forces, and pipe whip?	Reaction forces OK? Jet impingement OK?	Pipe whip restraints added? More ISI?	Pipe whip restraints added? More ISI?	Pipe whip restraints added? More ISI?	Were all high energy systems considered for pipe break? Were pipe break effects considered on other Category I structures, systems, and components? Is there sufficient redundancy or separation?
Mid-timeframe plant	Are all Category I structures, systems, and components considered as well as all appropriate sources? Is the RCS pump a missile concern?	Jet impingement or pipe whip OK? Internal structures OK for jet impingement, reaction forces, and pipe whip?	Reaction forces OK? Jet impingement OK?	Pipe whip restraints added? More ISI?	Pipe whip restraints added? More ISI?	Pipe whip restraints added? More ISI?	Were all high energy systems considered for pipe break? Were pipe break effects considered on other Category I structures, systems, and components? Is there sufficient redundancy or separation?
Later-timeframe plant	Are all Category I systems and components considered?	Jet impingement or pipe whip OK? Internal structures OK for jet impingement, reaction forces, and pipe whip?	Reaction forces OK? Jet impingement OK?				

Note:

a. Containment designs are all concrete with steel liners except for Kewaunee and Prairie Island 1 & 2, which are free-standing steel containments and a concrete shield building with an annular space between them.

Table 4-3. Commentary missing from SEP-III BWR SERs (plant specific).

Plant Name (SER Date)	Missiles Considered	Were These Design Provisions Made for Those Systems and Components Subjected to Pipe Break Effects?					
		Cont. Shell	Cont. Pen.	Recirc.	Main Steam	Feedwater	Other
Nine Mile Point 1 (5-69)	Are all Category I structures, systems, and components considered? Recirculation pumps with overspeed prevention?	Protective cover for containment? Jet protection barriers for vent system? Internal structures OK for jet impingement, differential pressure, reaction forces, and pipe whip?		Pipe whip restraints added? More ISI?	Pipe whip restraints added? More ISI?	Pipe whip restraints added? More ISI?	Pipe break effects disable or degrade essential equipment? Biological shield OK (including shield plugs as missiles)? RV support structure OK? Should pipe whip restraints be on other HELB lines? More ISI at locations where restraints not installed? Can RHR damage containment? ECCS redundant? Can pipe ruptures in cylindrical portion of drywell perforate it?
Monticello (3-70)	Are all Category I structures, systems, and components considered? Recirculation pumps with overspeed prevention?	Jet impingement OK? Protective cover for containment? Jet protection barriers for vent system? Internal structures OK for jet impingement, differential pressure, reaction forces, and pipe whip?	Jet protection barriers provided? Reaction forces OK?		Pipe whip restraints added?	Pipe whip restraints added?	Pipe break effects disable or degrade essential equipment? Biological shield OK (including shield plugs as missiles)? RV support structure OK? Should pipe whip restraints be on other HELB lines? More ISI at locations where restraints not installed? Can RHR damage containment? ECCS redundant? Can pipe ruptures in cylindrical portion of drywell perforate it?
Dresden 3 (11-70)	Are all Category I structures, systems, and components considered? Recirculation pumps with overspeed prevention?	Protective cover for containment? Jet protection barriers for vent system? Internal structures OK for jet impingement, differential pressure, reaction forces, and pipe whip?	Jet protection barriers provided? Reaction forces OK?		Pipe whip restraints added? More ISI?	Pipe whip restraints added? More ISI?	Pipe break effects disable or degrade essential equipment? Biological shield OK (including shield plugs as missiles) for other than pipe rupture pressures? RV support structure OK? Should pipe whip restraints be on other HELB lines? More ISI at locations where restraints not installed? Can RHR damage containment? ECCS redundant? Can pipe ruptures in cylindrical portion of drywell perforate it?

Table 4-3. (continued).

Plant Name (SER Date)	Missiles Considered	Were These Design Provisions Made for Those Systems and Components Subjected to Pipe Break Effects?					
		Cont. Shell	Cont. Pen.	Recirc.	Main Steam	Feedwater	Other
Vermont Yankee (6-71)	Are all Category I structures, systems, and components considered? Recirculation pumps with overspeed prevention?	Jet protection barriers for vent system? Internal structures OK for jet impingement, differential pressure, reaction forces, and pipe whip?	Jet protection barriers provided?		Pipe whip restraints added? More ISI?	Pipe whip restraints added? More ISI?	Pipe break effects disable or degrade essential equipment? Biological shield OK (including shield plugs as missiles)? RV support structure OK? Should pipe whip restraints be on other HELB lines? More ISI at locations where restraints not installed? Can RHR damage containment? ECCS redundant? Can pipe ruptures in cylindrical portion of drywell perforate it?
Quad Cities 1 (8-71)	Are all Category I structures, systems, and components considered? Recirculation pumps with overspeed prevention?	Jet impingement OK? Jet protection barriers for vent system? Internal structures OK for jet impingement, differential pressure, reaction forces, and pipe whip?	Jet protection barriers provided? Reaction forces OK?		Pipe whip restraints added?	Pipe whip restraints added?	Pipe break effects disable or degrade essential equipment? RV support structure OK? Should pipe whip restraints be on other HELB lines? More ISI at locations where restraints not installed? ECCS redundant? Can pipe ruptures in cylindrical portion of drywell perforate it?
Quad Cities 2 (8-71)	Are all Category I structures, systems, and components considered? Recirculation pumps with overspeed prevention?	Jet impingement OK? Jet protection barriers for vent system? Internal structures OK for jet impingement, differential pressure, reaction forces, and pipe whip?	Jet protection barriers provided? Reaction forces OK?		Pipe whip restraints added?	Pipe whip restraints added?	Pipe break effects disable or degrade essential equipment? RV support structure OK? Should pipe whip restraints be on other HELB lines? More ISI at locations where restraints not installed? ECCS redundant? Can pipe ruptures in cylindrical portion of drywell perforate it?
Pilgrim (8-71)	Are all Category I structures, systems, and components considered? Recirculation pumps with overspeed prevention?	Jet protection barriers for vent system? Internal structures OK for jet impingement, differential pressure, reaction forces, and pipe whip?	Jet protection barriers provided? Reaction forces OK?		Pipe whip restraints added? More ISI?	Pipe whip restraints added? More ISI?	Pipe break effects disable or degrade essential equipment? RV support structure OK? Should pipe whip restraints be on other HELB lines? More ISI at locations where restraints not installed? Can RHR damage containment? ECCS redundant?

Table 4-3. (continued).

Plant Name (SER Date)	Missiles Considered	Were These Design Provisions Made for Those Systems and Components Subjected to Pipe Break Effects?					
		Cont. Shell	Cont. Pen.	Recirc.	Main Steam	Feedwater	Other
Browns Ferry 1 (6-72)	Are all Category I structures, systems, and components considered?	Internal structures OK for jet impingement, differential pressure, reaction forces, and pipe whip?			Pipe whip restraints added? Yes at penetration	Pipe whip restraints added? Yes at penetration	Pipe break effects disable or degrade essential equipment? Biological shield OK (including shield plugs as missiles)? RV support structure OK? Should pipe whip restraints be on other HELB lines? More ISI at locations where restraints not installed? Can RHR damage containment? ECCS redundant? Can pipe ruptures in cylindrical portion of drywell perforate it?
Browns Ferry 2 (6-72)	Are all Category I structures, systems, and components considered?	Internal structures OK for jet impingement, differential pressure, reaction forces, and pipe whip?			Pipe whip restraints added? Yes at penetration	Pipe whip restraints added? Yes at penetration	Pipe break effects disable or degrade essential equipment? Biological shield OK (including shield plugs as missiles)? RV support structure OK? Should pipe whip restraints be on other HELB lines? More ISI at locations where restraints not installed? Can RHR damage containment? ECCS redundant? Can pipe ruptures in cylindrical portion of drywell perforate it?
Peach Bottom 2 (8-72)	Are all Category I structures, systems, and components considered? Recirculation pumps with overspeed prevention?	Jet protection barriers for vent system? Internal structures OK for jet impingement, differential pressure, reaction forces, and pipe whip?	Reaction forces OK?		Pipe whip restraints added? More ISI?	Pipe whip restraints added? More ISI?	Pipe break effects disable or degrade essential equipment? RV support structure OK? Should pipe whip restraints be on other HELB lines? More ISI at locations where restraints not installed? Can RHR damage containment? ECCS redundant?
Peach Bottom 3 (8-72)	Are all Category I structures, systems, and components considered? Recirculation pumps with overspeed prevention?	Jet protection barriers for vent system? Internal structures OK for jet impingement, differential pressure, reaction forces, and pipe whip?	Reaction forces OK?		Pipe whip restraints added? More ISI?	Pipe whip restraints added? More ISI?	Pipe break effects disable or degrade essential equipment? RV support structure OK? Should pipe whip restraints be on other HELB lines? More ISI at locations where restraints not installed? Can RHR damage containment? ECCS redundant?

Table 4-3. (continued).

Plant Name (SER Date)	Missiles Considered	Were These Design Provisions Made for Those Systems and Components Subjected to Pipe Break Effects?					
		Cont. Shell	Cont. Pen.	Recirc.	Main Steam	Feedwater	Other
Fitzpatrick (11-72)	Are all Category I structures, systems, and components considered?	Jet protection barriers for vent system? Internal structures OK for jet impingement, differential pressure, reaction forces, and pipe whip?	Jet protection barriers provided?				Pipe break effects disable or degrade essential equipment? Biological shield and RV support structure OK for pipe rupture pressures? Should pipe whip restraints be on other HELB lines? Can RHR damage containment? Can pipe ruptures in cylindrical portion of drywell perforate it?
Duane Arnold (1-73)		Jet impingement OK? Protective cover for containment? Jet protection barriers for vent system? Internal structures OK for jet impingement, differential pressure, reaction forces, and pipe whip?	Jet protection barriers provided? Reaction forces OK?				
Cooper (2-73)	Are all Category I structures, systems, and components considered?	Jet protection barriers for vent system? Internal structures OK for reaction forces and pipe whip?	Reaction forces OK?				
Hatch 1 (5-73)	Are all Category I structures, systems, and components considered?	Jet impingement OK? Protective cover for containment? Internal structures OK for jet impingement, differential pressure, reaction forces, and pipe whip?	Reaction forces OK?				
Brunswick 2 (11-73)	Are internal missiles considered on all Category I structures, systems, and components?	Protective cover for containment? Jet protection barriers for vent system? Internal structures OK for reaction forces and pipe whip?	Jet protection barriers provided? Reaction forces OK?				

Note:

a. Containment designs are all free-standing steel primary containments with a surrounding concrete reactor building, except for Brunswick 2, which is a steel-lined concrete primary containment with a surrounding concrete reactor building.

Table 4-4. Commentary missing from SEP-III PWR SERs (plant specific).

Plant Name (SER Date)	Missiles Considered	Were These Design Provisions Made for Those Systems and Components Subjected to Pipe Break Effects?					
		Cont. Shell	Cont.Pen.	RCS Loop	Main Stm.		Other
Robinson 2 (5-70)	Are all Category I structures, systems, and components considered as well as all appropriate sources? Is the RCS pump a missile concern?	Jet impingement or pipe whip OK? Internal structures OK for jet impingement, differential pressure, reaction forces, and pipe whip?	Reaction forces OK? Jet impingement OK?	Pipe whip restraints added? More ISI?	Pipe whip restraints added? More ISI?	Feedwater	Were all high energy systems considered for pipe break? Were pipe break effects considered on other Category I structures, systems, and components? Is there sufficient redundancy or separation?
Pt. Beach 1 (7/70)	Are all Category I structures, systems, and components considered as well as all appropriate sources? Is the RCS pump a missile concern?	Jet impingement or pipe whip OK? Internal structures OK for jet impingement, differential pressure, reaction forces, and pipe whip?	Reaction forces OK? Jet impingement OK?	Pipe whip restraints added? More ISI?	Pipe whip restraints added? More ISI?	Pipe whip restraints added? More ISI?	Were all high energy systems considered for pipe break? Were pipe break effects considered on other Category I structures, systems, and components? Is there sufficient redundancy or separation?
Pt. Beach 2 (7/70)	Are all Category I structures, systems, and components considered as well as all appropriate sources? Is the RCS pump a missile concern?	Jet impingement or pipe whip OK? Internal structures OK for jet impingement, differential pressure, reaction forces, and pipe whip?	Reaction forces OK? Jet impingement OK?	Pipe whip restraints added? More ISI?	Pipe whip restraints added? More ISI?	Pipe whip restraints added? More ISI?	Were all high energy systems considered for pipe break? Were pipe break effects considered on other Category I structures, systems, and components? Is there sufficient redundancy or separation?
Indian Pt. 2 (11/70)	Are all Category I structures, systems, and components considered as well as all appropriate sources?	Jet impingement or pipe whip OK? Internal structures OK for jet impingement, differential pressure, reaction forces, and pipe whip?	Reaction forces OK? Jet impingement OK?	Pipe whip restraints added? More ISI?	Pipe whip restraints added? More ISI?	Pipe whip restraints added? More ISI?	Were all high energy systems considered for pipe break? Were pipe break effects considered on other Category I structures, systems, and components? Is there sufficient redundancy or separation?

Table 4-3. (continued).

Plant Name (SER Date)	Missiles Considered	Were These Design Provisions Made for Those Systems and Components Subjected to Pipe Break Effects?					
		Cont. Shell	Cont. Pen.	Recirc.	Main Steam	Feedwater	Other
Fitzpatrick (11-72)	Are all Category I structures, systems, and components considered?	Jet protection barriers for vent system? Internal structures OK for jet impingement, differential pressure, reaction forces, and pipe whip?	Jet protection barriers provided?				Pipe break effects disable or degrade essential equipment? Biological shield and RV support structure OK for pipe rupture pressures? Should pipe whip restraints be on other HELB lines? Can RHR damage containment? Can pipe ruptures in cylindrical portion of drywell perforate it?
Duane Arnold (1-73)		Jet impingement OK? Protective cover for containment? Jet protection barriers for vent system? Internal structures OK for jet impingement, differential pressure, reaction forces, and pipe whip?	Jet protection barriers provided? Reaction forces OK?				
Cooper (2-73)	Are all Category I structures, systems, and components considered?	Jet protection barriers for vent system? Internal structures OK for reaction forces and pipe whip?	Reaction forces OK?				
Hatch 1 (5-73)	Are all Category I structures, systems, and components considered?	Jet impingement OK? Protective cover for containment? Internal structures OK for jet impingement, differential pressure, reaction forces, and pipe whip?	Reaction forces OK?				
Brunswick 2 (11-73)	Are internal missiles considered on all Category I structures, systems, and components?	Protective cover for containment? Jet protection barriers for vent system? Internal structures OK for reaction forces and pipe whip?	Jet protection barriers provided? Reaction forces OK?				

Note:

a. Containment designs are all free-standing steel primary containments with a surrounding concrete reactor building, except for Brunswick 2, which is a steel-lined concrete primary containment with a surrounding concrete reactor building.

Table 4-4. Commentary missing from SEP-III PWR SERs (plant specific).

Plant Name (SER Date)	Missiles Considered	Were These Design Provisions Made for Those Systems and Components Subjected to Pipe Break Effects?					
		Cont. Shell	Cont.Pen.	RCS Loop	Main Stm.		Other
Robinson 2 (5-70)	Are all Category I structures, systems, and components considered as well as all appropriate sources? Is the RCS pump a missile concern?	Jet impingement or pipe whip OK? Internal structures OK for jet impingement, differential pressure, reaction forces, and pipe whip?	Reaction forces OK? Jet impingement OK?	Pipe whip restraints added? More ISI?	Pipe whip restraints added? More ISI?	Feedwater	Were all high energy systems considered for pipe break? Were pipe break effects considered on other Category I structures, systems, and components? Is there sufficient redundancy or separation?
Pt. Beach 1 (7/70)	Are all Category I structures, systems, and components considered as well as all appropriate sources? Is the RCS pump a missile concern?	Jet impingement or pipe whip OK? Internal structures OK for jet impingement, differential pressure, reaction forces, and pipe whip?	Reaction forces OK? Jet impingement OK?	Pipe whip restraints added? More ISI?	Pipe whip restraints added? More ISI?	Pipe whip restraints added? More ISI?	Were all high energy systems considered for pipe break? Were pipe break effects considered on other Category I structures, systems, and components? Is there sufficient redundancy or separation?
Pt. Beach 2 (7/70)	Are all Category I structures, systems, and components considered as well as all appropriate sources? Is the RCS pump a missile concern?	Jet impingement or pipe whip OK? Internal structures OK for jet impingement, differential pressure, reaction forces, and pipe whip?	Reaction forces OK? Jet impingement OK?	Pipe whip restraints added? More ISI?	Pipe whip restraints added? More ISI?	Pipe whip restraints added? More ISI?	Were all high energy systems considered for pipe break? Were pipe break effects considered on other Category I structures, systems, and components? Is there sufficient redundancy or separation?
Indian Pt. 2 (11/70)	Are all Category I structures, systems, and components considered as well as all appropriate sources?	Jet impingement or pipe whip OK? Internal structures OK for jet impingement, differential pressure, reaction forces, and pipe whip?	Reaction forces OK? Jet impingement OK?	Pipe whip restraints added? More ISI?	Pipe whip restraints added? More ISI?	Pipe whip restraints added? More ISI?	Were all high energy systems considered for pipe break? Were pipe break effects considered on other Category I structures, systems, and components? Is there sufficient redundancy or separation?

Table 4-4. (continued).

Plant Name (SER Date)	Missiles Considered	Were These Design Provisions Made for Those Systems and Components Subjected to Pipe Break Effects?					
		Cont. Shell	Cont.Pen.	RCS Loop	Main Stm.		Other
Oconee 1 (12/70)	Are all Category I structures, systems, and components considered?	Jet impingement or pipe whip OK? Internal structures OK for jet impingement, differential pressure, reaction forces, and pipe whip?	Reaction forces OK? Jet impingement OK?		Pipe whip restraints added? More ISI?	Pipe whip restraints added? More ISI?	Were all high energy systems considered for pipe break? Were pipe break effects considered on other Category I structures, systems, and components? Is there sufficient redundancy or separation?
Oconee 2 (12/70)	Are all Category I structures, systems, and components considered?	Jet impingement or pipe whip OK? Internal structures OK for jet impingement, differential pressure, reaction forces, and pipe whip?	Reaction forces OK? Jet impingement OK?		Pipe whip restraints added? More ISI?	Pipe whip restraints added? More ISI?	Were all high energy systems considered for pipe break? Were pipe break effects considered on other Category I structures, systems, and components? Is there sufficient redundancy or separation?
Oconee 3 (12/70)	Are all Category I structures, systems, and components considered?	Jet impingement or pipe whip OK? Internal structures OK for jet impingement, differential pressure, reaction forces, and pipe whip?	Reaction forces OK? Jet impingement OK?		Pipe whip restraints added? More ISI?	Pipe whip restraints added? More ISI?	Were all high energy systems considered for pipe break? Were pipe break effects considered on other Category I structures, systems, and components? Is there sufficient redundancy or separation?
Surry 1 (2/71)							Document not available
Surry 2 (2/71)							Document not available
Maine Yankee (2/72)	Are all Category I structures, systems, and components considered as well as all appropriate sources? Is the RCS pump a missile concern?	Jet impingement or pipe whip OK? Internal structures OK for jet impingement, differential pressure, reaction forces, and pipe whip?	Reaction forces OK? Jet impingement OK?	Pipe whip restraints added? More ISI?	Pipe whip restraints added? More ISI?	Pipe whip restraints added? More ISI?	Were all high energy systems considered for pipe break? Were pipe break effects considered on other Category I structures, systems, and components? Is there sufficient redundancy or separation?

Table 4-4. (continued).

Plant Name (SER Date)	Missiles Considered	Were These Design Provisions Made for Those Systems and Components Subjected to Pipe Break Effects?					
		Cont. Shell	Cont.Pen.	RCS Loop	Main Stm.		Other
Turkey Pt. 3 (3/72)		Jet impingement or pipe whip OK? All internal structures OK for jet impingement, differential pressure, reaction forces, and pipe whip?	Reaction forces OK? Jet impingement OK?	Pipe whip restraints added? More ISI?	Pipe whip restraints added? More ISI?	Pipe whip restraints added? More ISI?	Were all high energy systems considered for pipe break? Were pipe break effects considered on other Category I structures, systems, and components? Is there sufficient redundancy or separation?
Turkey Pt. 4 (3/72)		Jet impingement or pipe whip OK? All internal structures OK for jet impingement, differential pressure, reaction forces, and pipe whip?	Reaction forces OK? Jet impingement OK?	Pipe whip restraints added? More ISI?	Pipe whip restraints added? More ISI?	Pipe whip restraints added? More ISI?	Were all high energy systems considered for pipe break? Were pipe break effects considered on other Category I structures, systems, and components? Is there sufficient redundancy or separation?
Kewaunee (7/72)	Are all Category I systems and components considered? Is the RCS pump a missile concern?	Pipe whip OK? All internal structures OK for jet impingement, reaction forces, and pipe whip?	Reaction forces OK?	Pipe whip restraints added? More ISI?	Pipe whip restraints added? More ISI?	Pipe whip restraints added? More ISI?	Were all high energy systems considered for pipe break? Were pipe break effects considered on other Category I structures, systems, and components? Is there sufficient redundancy or separation?
Ft. Calhoun (8/72)	Are all Category I structures, systems, and components considered as well as all appropriate sources? Is the RCS pump a missile concern?	Jet impingement or pipe whip OK? All internal structures OK for jet impingement, reaction forces, and pipe whip?	Reaction forces OK? Jet impingement OK?	Pipe whip restraints added? More ISI?	Pipe whip restraints added? More ISI?	Pipe whip restraints added? More ISI?	Were all high energy systems considered for pipe break? Were pipe break effects considered on other Category I structures, systems, and components? Is there sufficient redundancy or separation?

Table 4-4. (continued).

Plant Name (SER Date)	Missiles Considered	Were These Design Provisions Made for Those Systems and Components Subjected to Pipe Break Effects?					
		Cont. Shell	Cont.Pen.	RCS Loop	Main Stm.		Other
Calvert Cliffs 1 (8/72)	Are all Category I structures, systems, and components considered as well as all appropriate sources?	Jet impingement or pipe whip OK? All internal structures OK for jet impingement, reaction forces, and pipe whip?	Reaction forces OK? Jet impingement OK?	Pipe whip restraints added? More ISI?	Pipe whip restraints added? More ISI?	Pipe whip restraints added? More ISI?	Were all high energy systems considered for pipe break? Were pipe break effects considered on other Category I structures, systems, and components? Is there sufficient redundancy or separation?
Prairie Island 1 (9/72)	Are all Category I systems and components considered?	Pipe whip OK? All internal structures OK for reaction forces and pipe whip?	Reaction forces OK?	Pipe whip restraints added? More ISI?	Pipe whip restraints added? More ISI?	Pipe whip restraints added? More ISI?	High pressure not defined in SER nor UFSAR. What about high temperature pipe? Were pipe break effects considered on other Category I structures, systems, and components?
Prairie Island 2 (9/72)	Are all Category I systems and components considered?	Pipe whip OK? All internal structures OK for reaction forces and pipe whip?	Reaction forces OK?	Pipe whip restraints added? More ISI?	Pipe whip restraints added? More ISI?	Pipe whip restraints added? More ISI?	High pressure not defined in SER nor UFSAR. What about high temperature pipe? Were pipe break effects considered on other Category I structures, systems, and components?
Zion 1 (10/72)	Are all Category I systems and components considered?	Jet impingement or pipe whip OK? Internal structures OK for reaction forces and pipe whip?	Reaction forces OK? Jet impingement OK?			Pipe whip restraints added? More ISI?	Were all high energy systems considered for pipe break? Were pipe break effects considered on other Category I structures, systems, and components? Is there sufficient redundancy or separation?
Zion 2 (10/72)	Are all Category I systems and components considered?	Jet impingement or pipe whip OK? Internal structures OK for reaction forces and pipe whip?	Reaction forces OK? Jet impingement OK?				Were all high energy systems considered for pipe break? Were pipe break effects considered on other Category I structures, systems, and components? Is there sufficient redundancy or separation?
ANO 1 (6/73)		Jet impingement or pipe whip OK? Internal structures OK for reaction forces?	Reaction forces OK? Jet impingement OK?	Pipe whip restraints added? More ISI?	Pipe whip restraints added? More ISI?		What about high temperature pipe? Were pipe break effects considered on other Category I structures, systems, and components? Is there sufficient redundancy or separation?

Table 4-4. (continued).

Plant Name (SER Date)	Missiles Considered	Were These Design Provisions Made for Those Systems and Components Subjected to Pipe Break Effects?					
		Cont. Shell	Cont.Pen.	RCS Loop	Main Stm.		Other
TMI 1 (7/73)	Are all Category I structures, systems, and components considered as well as all appropriate sources?	Jet impingement or pipe whip OK? Internal structures OK for jet impingement, reaction forces, and pipe whip?	Reaction forces OK? Jet impingement OK?			Pipe whip restraints added? More ISI?	Were all high energy systems considered for pipe break? Were pipe break effects considered on other Category I structures, systems, and components? Is there sufficient redundancy or separation?
Indian Pt. 3 (9/73)	Are all Category I systems and components considered?	Jet impingement or pipe whip OK? Internal structures OK for jet impingement, reaction forces, and pipe whip?	Reaction forces OK? Jet impingement OK?				
D. C. Cook 1 (9/73)	Are all Category I systems and components considered?	Jet impingement or pipe whip OK? Internal structures OK for reaction forces?	Reaction forces OK? Jet impingement OK?				
Millstone 2 (5/74)		Internal structures OK for reaction forces and pipe whip?	Reaction forces OK? Jet impingement OK?				
Trojan (10/74)		Internal structures OK for reaction forces and pipe whip?	Reaction forces OK? Jet impingement OK?				

Note:

a. Containment designs are all concrete with steel liners except for Kewaunee and Prairie Island 1 & 2, which are free-standing steel containments and a concrete shield building with an annular space between them.

Table 4-4. (continued).

Plant Name (SER Date)	Missiles Considered	Were These Design Provisions Made for Those Systems and Components Subjected to Pipe Break Effects?					
		Cont. Shell	Cont.Pen.	RCS Loop	Main Stm.		Other
Calvert Cliffs 1 (8/72)	Are all Category I structures, systems, and components considered as well as all appropriate sources?	Jet impingement or pipe whip OK? All internal structures OK for jet impingement, reaction forces, and pipe whip?	Reaction forces OK? Jet impingement OK?	Pipe whip restraints added? More ISI?	Pipe whip restraints added? More ISI?	Pipe whip restraints added? More ISI?	Were all high energy systems considered for pipe break? Were pipe break effects considered on other Category I structures, systems, and components? Is there sufficient redundancy or separation?
Prairie Island 1 (9/72)	Are all Category I systems and components considered?	Pipe whip OK? All internal structures OK for reaction forces and pipe whip?	Reaction forces OK?	Pipe whip restraints added? More ISI?	Pipe whip restraints added? More ISI?	Pipe whip restraints added? More ISI?	High pressure not defined in SER nor UFSAR. What about high temperature pipe? Were pipe break effects considered on other Category I structures, systems, and components?
Prairie Island 2 (9/72)	Are all Category I systems and components considered?	Pipe whip OK? All internal structures OK for reaction forces and pipe whip?	Reaction forces OK?	Pipe whip restraints added? More ISI?	Pipe whip restraints added? More ISI?	Pipe whip restraints added? More ISI?	High pressure not defined in SER nor UFSAR. What about high temperature pipe? Were pipe break effects considered on other Category I structures, systems, and components?
Zion 1 (10/72)	Are all Category I systems and components considered?	Jet impingement or pipe whip OK? Internal structures OK for reaction forces and pipe whip?	Reaction forces OK? Jet impingement OK?			Pipe whip restraints added? More ISI?	Were all high energy systems considered for pipe break? Were pipe break effects considered on other Category I structures, systems, and components? Is there sufficient redundancy or separation?
Zion 2 (10/72)	Are all Category I systems and components considered?	Jet impingement or pipe whip OK? Internal structures OK for reaction forces and pipe whip?	Reaction forces OK? Jet impingement OK?				Were all high energy systems considered for pipe break? Were pipe break effects considered on other Category I structures, systems, and components? Is there sufficient redundancy or separation?
ANO 1 (6/73)		Jet impingement or pipe whip OK? Internal structures OK for reaction forces?	Reaction forces OK? Jet impingement OK?	Pipe whip restraints added? More ISI?	Pipe whip restraints added? More ISI?		What about high temperature pipe? Were pipe break effects considered on other Category I structures, systems, and components? Is there sufficient redundancy or separation?

Table 4-4. (continued).

Plant Name (SER Date)	Missiles Considered	Were These Design Provisions Made for Those Systems and Components Subjected to Pipe Break Effects?					
		Cont. Shell	Cont.Pen.	RCS Loop	Main Stm.		Other
TMI 1 (7/73)	Are all Category I structures, systems, and components considered as well as all appropriate sources?	Jet impingement or pipe whip OK? Internal structures OK for jet impingement, reaction forces, and pipe whip?	Reaction forces OK? Jet impingement OK?			Pipe whip restraints added? More ISI?	Were all high energy systems considered for pipe break? Were pipe break effects considered on other Category I structures, systems, and components? Is there sufficient redundancy or separation?
Indian Pt. 3 (9/73)	Are all Category I systems and components considered?	Jet impingement or pipe whip OK? Internal structures OK for jet impingement, reaction forces, and pipe whip?	Reaction forces OK? Jet impingement OK?				
D. C. Cook 1 (9/73)	Are all Category I systems and components considered?	Jet impingement or pipe whip OK? Internal structures OK for reaction forces?	Reaction forces OK? Jet impingement OK?				
Millstone 2 (5/74)		Internal structures OK for reaction forces and pipe whip?	Reaction forces OK? Jet impingement OK?				
Trojan (10/74)		Internal structures OK for reaction forces and pipe whip?	Reaction forces OK? Jet impingement OK?				

Note:

a. Containment designs are all concrete with steel liners except for Kewaunee and Prairie Island 1 & 2, which are free-standing steel containments and a concrete shield building with an annular space between them.

4.3 First-Level List

The NSSS designs of nuclear power plants in the United States are somewhat similar for the same classes of plants; however, each plant is unique in the overall layout of structures, systems, and components. For example, the general arrangement of the RCS for a four-loop Westinghouse NSSS plant will be similar to another of that class. However, the relative locations of other piping systems, their supports, and associated mechanical and electrical equipment may be significantly different. For this reason, a detailed list of potential concerns resulting from a postulated high-energy line break event would necessarily be a plant-specific list.

Since the scope of this project does not include the extensive effort that would be required to obtain and evaluate plant-specific information, a more general systems approach was decided upon to develop a list of potential concerns. It is possible to express these concerns as a series of questions that can be applied to each individual structure, system, or component of interest. The proposed list of screening questions includes the following:

1. Is containment integrity maintained?

2. Are sufficient coolant paths to shut down the reactor maintained?

3. Is the integrity of electrical and instrumentation systems and components needed to shut down the reactor maintained?

4. Are other safety-related structures, systems, or components isolated or protected from impact by a whipping pipe?

5. Are other safety-related structures, systems, or components isolated or protected from jet impingement damage resulting from the postulated break?

6. Will the propagation of the break to another safety-related structure, system, or component be prevented or limited to acceptable levels (i.e., cascading damage prevented)?

The intent of the questions listed above is to provide the basis for a screening process for the systems in plants that have not met the intent of or complied with RG 1.46. If a plant has met the requirements of RG 1.46, then the answers to the screening questions above would be "yes." Plants not committed to the requirements of RG 1.46 could use the screening process to eliminate systems from further concern. For example, the core spray piping observed in the Browns Ferry Unit 3 plant appeared to be sufficiently remote from other safety-related equipment that a postulated break in one of the two redundant system paths would not be expected to damage the other path or another system.

The background information clearly indicated that the early- and mid-timeframe BWR and PWR plants may not have completely considered all the required high-energy systems and all of the potential loadings and interaction effects of a high-energy pipe break inside containment. Therefore, as a first-level list of concerns, the assumption was made that any high-energy line is susceptible to a potential failure. The only exclusion is for the large-bore main reactor coolant loop piping in the PWR plants. Because of the acceptance of the leak-before-break methodology, these lines will not be considered susceptible to failure. Therefore, pipe whip effects will be excluded, but jet impingement from a leak will be included. Table 4-5 lists the high-energy piping systems that are considered potential pipe failure candidates for BWR and PWR SEP-III plants.

Obviously, the evaluation of a pipe break must begin with the assumed loss of function of the pipeline that broke. The mitigation goal is to be able to bring the plant down to a cold shutdown condition. Typically, the existence of alternate or redundant core cooling methods are considered. However, the assumption that other alternate or redundant systems exist should not be automatically made, especially for the early-timeframe plants. The existence of these alternate or redundant systems must be verified.

Table 4-5. High-energy lines for inside containment break consideration.

BWR Plants	PWR Plants
Main steam	Pressurizer surge
Feedwater	Accumulator injection
Reactor recirculation	Residual heat removal supply
Core spray	Residual heat removal return
Containment spray	Low-pressure safety injection
Residual heat removal supply and return	High-pressure safety injection
Emergency condenser supply and return	Pressurizer spray
Control rod drive hydraulic	Normal charging
Liquid poison / standby liquid control	Auxiliary spray
Relief valve discharge	Alternate charging
Shutdown cooling	RTD bypass
Head spray	Normal letdown
Reactor water cleanup (RWCU)	Excess letdown
Reactor core isolation cooling (RCIC)	Reactor coolant drain
High pressure coolant injection (HPCI)	Shutdown cooling
Low pressure coolant injection (LPCI)	Pressurizer safety and relief
Steam supply to HPCI	Main steam (possibly main steam drains)
Reactor drains	Feedwater
Main steam drains	Steam generator blowdown
Isolation condenser	Auxiliary feedwater
	Reactor coolant pump seal water injection
	Reactor coolant pump seal vent / leakoff
	Chemical and volume control
	Containment recirculation
	Nitrogen gas
	Core flood
	Decay heat removal
	Makeup/high pressure injection
	RCS (leak only)

With the exception of Nine Mile Point Unit 1, all of the BWR plants reported that pipe whip restraints were installed on their recirculation piping. This obviously helps to mitigate recirculation pipe break effects, but insufficient information did not permit the assumption that the recirculation piping was adequately restrained and satisfied the criteria contained in the SRP. Therefore, pipe breaks were also assumed to occur in the BWR recirculation piping systems.

4.4 Potential Consequences of a High-Energy Pipe Break Inside Containment

Once the pipe break assumption was made, the sequential consequences of the break were then considered. For this, we assumed that the pipe break could potentially impact or load (1) other safety-related piping, (2) safety-related equipment including mechanical, electrical, instrumentation, cabling, etc., (3) the containment shell, and (4) other internal structures. Most of the concerns regarding the potential functional loss of internal structures is covered by (1) and (2) above. Piping, instrumentation, cabling, or other electrical equipment can be supported from internal structures. However, certain internal structures supporting the reactor vessel, steam generators, or other large equipment must be considered explicitly.

Generating a list of specific safety-related equipment (including mechanical, electrical, instrumentation, cabling, etc.) that could be affected by a high-energy pipe break would have been a monumental task. Therefore, it was assumed that a high-energy pipe break could cause the loss of function of any safety-related system, mechanical, electrical, or instrumentation. Consequently, redundancy and separation became an important design consideration in order to have adequate "defense-in-depth".

Without additional information, this initial or first-level list also included the assumption that internal structures (Category I) that could be impacted by a high-energy pipe line would lose their capability to function. This assumption invokes the potential loss of support for major components such as the reactor vessel, steam generators, pressurizers, etc.

Finally, the potential of a high-energy pipe impacting or loading (via jet impingement) the containment shell was also considered. In its UFSAR, the Nine Mile Point Unit 1 plant staff considered various pipe impacts on the drywell containment shell [a 24-in. (0.6 m) main steam line breaking from its RV nozzle attachment, a 10-in. (0.3 m) feedwater line breaking from its RV nozzle attachment, and a 28-in. (0.7-m) recirculation line breaking and impacting the spherical portion of the drywell]. Their analytical evaluation indicated no rupture of the containment. However, other BWR plants installed protective covers on the inside of the drywell to mitigate pipe break concerns and other plants added pipe whip restraints on the main steam, feedwater, and other high-energy pipe lines. Therefore, for this "first-level" list, it was assumed that containment rupture could occur after a pipe impact. If this assumption is made, then a secondary concern is the potential buckling that may occur in certain free-standing containments surrounded by another building. For example, the BWR Mark I drywell containments have an annular region between the drywell and the surrounding reactor building. If this annular region can be pressurized by a high-energy pipeline that has ruptured the drywell containment shell, then the free-standing steel drywell containment can be loaded by an external pressure which could cause buckling. Commentary in the Hatch and Duane Arnold licensing SERs indicates that these drywell containments were designed for a 2 psig (0.01 Mpa) differential pressure. Such a low differential pressure could be achieved if a high-energy pipe was to blow down into the annular region.

In summary, the potential consequences of a high-energy pipe break occurring inside the containment structure (whether BWR drywell or the various PWR types) will be highly dependent upon the individual plant layout. Using the criteria listed above, the following are several scenarios that could be postulated to result from a high-energy line break event:

1. Loss of critical electrical system(s) (e.g., RPS) due to either a whipping pipe impact or jet impingement

2. Loss of critical instrumentation (e.g., RCS hot leg temperature, pressurizer level)

3. Loss of containment integrity due to the impact of a large pipe

4. Loss of another safety-related piping system

5. Loss of a safety-related structure (e.g., seismic bracing, safety-related system snubber)

6. Loss of safety-related mechanical equipment (e.g., a control or isolation valve).

Flow diagrams that could be used to evaluate the consequences of a single pipe break inside containment are shown in Figures 4-1 through 4-3.

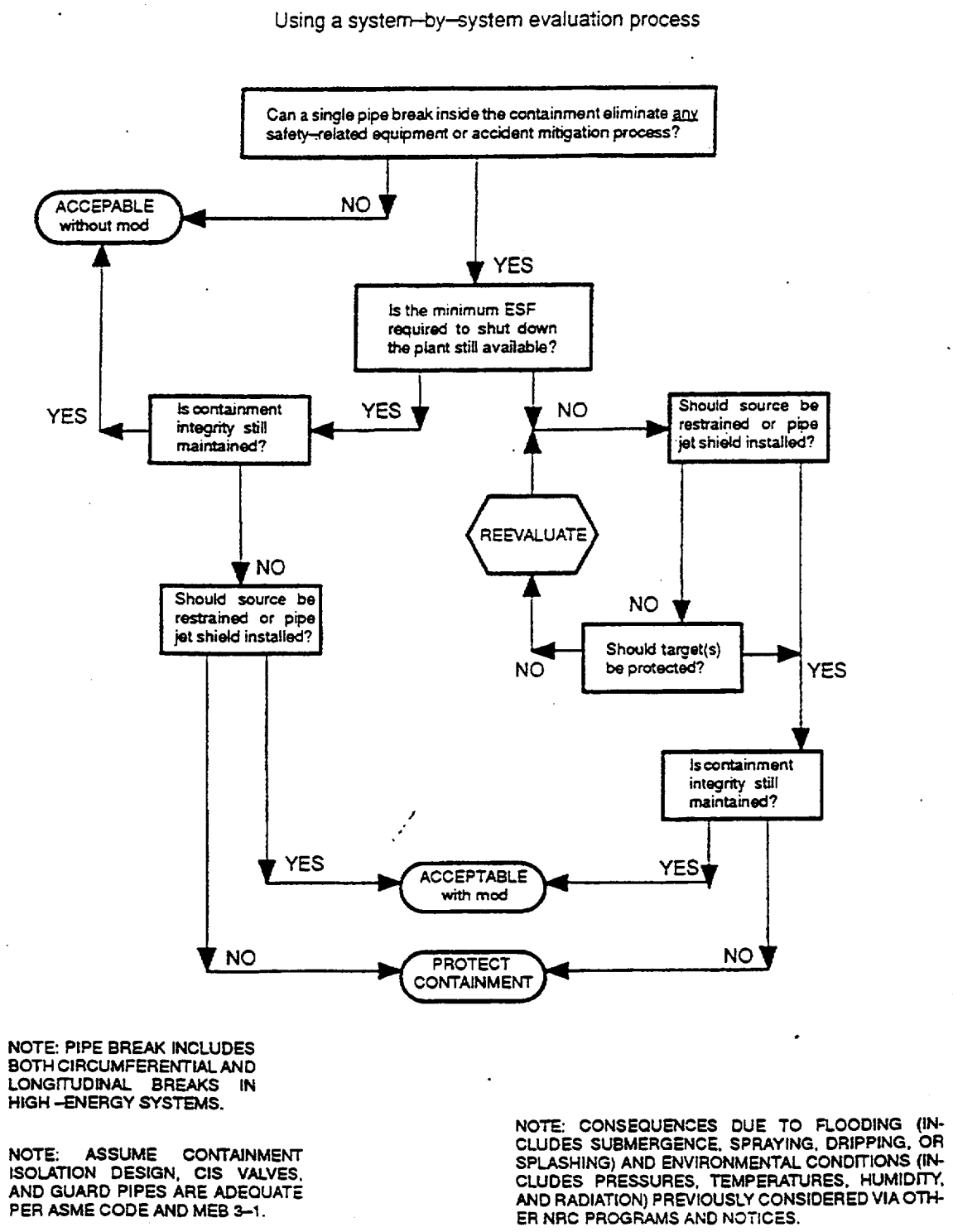

Figure 4-1. Consequences of a single pipe break inside containment.

Using a system–by–system evaluation process

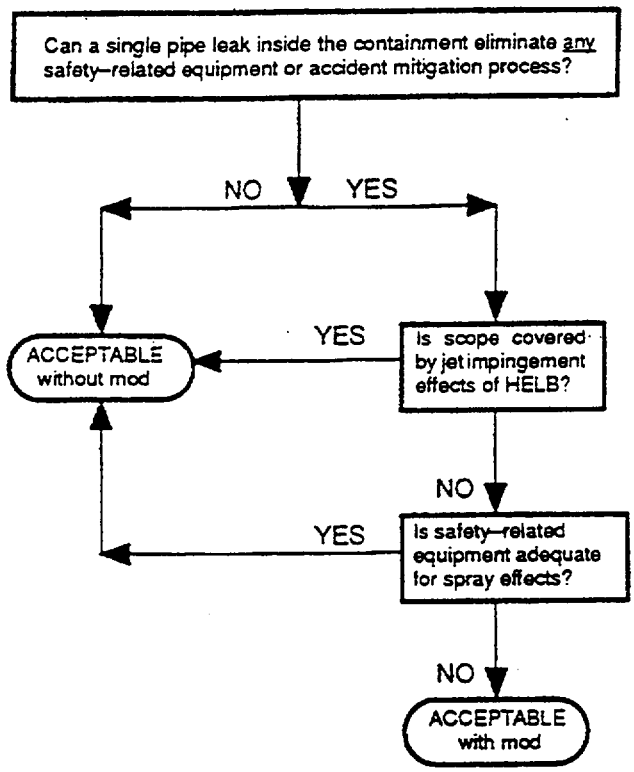

In light of Generic Letter 88–20, moderate–energy pipe leaks are not considered to be a major effect for this task.

NOTE: CONSEQUENCES DUE TO FLOODING (INCLUDES SUBMERGENCE, SPRAYING, DRIPPING, OR SPLASHING) AND ENVIRONMENTAL CONDITIONS (INCLUDES PRESSURES, TEMPERATURES, HUMIDITY, AND RADIATION) PREVIOUSLY CONSIDERED VIA OTHER NRC PROGRAMS AND NOTICES.

NOTE: PIPE LEAK INCLUDES BOTH CIRCUMFERENTIAL AND LONGITUDINAL LEAKS IN MODERATE–ENERGY SYSTEMS.

Figure 4-2. Consequences of a single pipe leak inside containment.

Using a system–by–system evaluation process

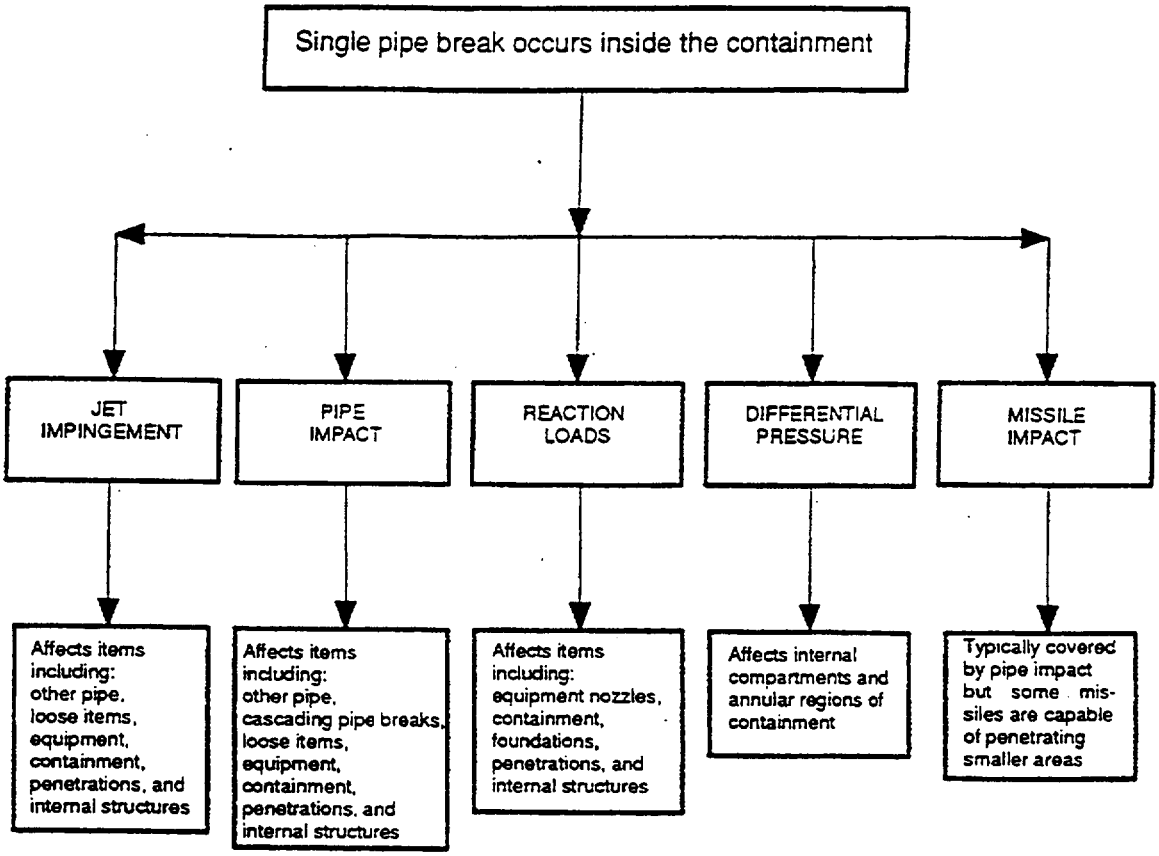

NOTE: PIPE BREAK INCLUDES BOTH CIRCUMFERENTIAL AND LONGITUDINAL BREAKS IN HIGH–ENERGY SYSTEMS.

NOTE: ASSUME CONTAINMENT ISOLATION DESIGN, CIS VALVES, AND GUARD PIPES ARE ADEQUATE PER ASME CODE AND MEB 3–1.

NOTE: CONSEQUENCES DUE TO FLOODING (INCLUDES SUBMERGENCE, SPRAYING, DRIPPING, OR SPLASHING) AND ENVIRONMENTAL CONDITIONS (INCLUDES PRESSURES, TEMPERATURES, HUMIDITY, AND RADIATION) PREVIOUSLY CONSIDERED VIA OTHER NRC PROGRAMS AND NOTICES.

NOTE: CONSIDERATION OF HIGH PRESSURE LOADINGS, DUE TO LOCA, ON THE CONTAINMENT SHELL AND PENETRATIONS NOT EXPLICITLY ADDRESSED HEREIN SINCE ADEQUATELY COVERED IN PAST.

Figure 4-3. Consideration of a single pipe break inside containment by effect.

5. DEVELOPMENT OF A SECOND-LEVEL LIST OF POTENTIAL SEP-III CONCERNS

Based on the first-level of concerns and the plant visits, a second list of potential concerns was developed. The lists were begun as plant-specific, but since there are differences in the routing of the piping, electrical conduits, and instrumentation due to field routing within the containment, some items that are not a concern for the plants visited may be concerns for other SEP-III plants. The second-level lists of potential concerns for PWR and BWR plants are discussed separately in Sections 5.1 and 5.2.

5.1 PWR Plants

Two PWR plants were visited to review the plant layout, the pipe break and jet impingement protection, and the relative location of components to one another. The newer of the two plants was a Westinghouse 4-loop SEP-III PWR that was designed to RG 1.46 standards. The other, a Westinghouse 3-loop plant, was one of the older SEP-III PWRs for which the documentation on pipe whip and jet impingement was limited. However, on the older plant, the NSSS designer (Westinghouse) had informed the architect-engineer (Ebasco) in the late 1960s that the reactor coolant system, main steam, and feedwater piping were to be restrained for pipe whip. These lines appeared to be well protected for pipe whip on this plant (with the exception of the steam generator area, in which we did not note any targets).

In addition to evaluating the pipe break protection for the specific plant, we also attempted to use the plant layouts to generalize possible break locations and targets for other plants, for which we did not know the pipe break protection history. We did not have access to the plant stress analyses, so we did not know the locations of high stress or fatigue usage >0.1 that would be used to identify pipe break locations using today's standards. In our brief tours inside containment, we did not have the time to survey each high-energy line along its entire route, noting the potential break points and targets, but rather we obtained a general overall view from several locations inside the containment. A number of pipe whip restraints on high-energy lines were observed in both plants, but there appeared to be only minimal, if any, jet impingement shields, although the concrete walls discussed in the next paragraph serve this purpose in many areas.

The two PWRs we visited had a number of concrete walls that offer support and serve as missile, pipe whip, and jet impingement shields as well (Figures 5-1 and 5-2). The outer barrier is the containment wall. Concentrically inward is the secondary shield wall (called the crane wall in some plants). In the area between the containment and secondary shield walls are located equipment such as the accumulators, pressurizer relief tank, and portions of many of the high-energy piping systems (for example, main steam, feedwater, RHR, safety injection, CVCS). The electrical and instrumentation lines also enter the containment and are distributed in this annulus. There is another concentric concrete wall within the secondary shield wall which surrounds the reactor vessel. In the area between the reactor shield wall and the secondary shield wall, the reactor coolant loops (including the pumps and steam generators) are separated from each other by concrete walls in the older plant (Figure 5-1). The pressurizer and in-core instrumentation are surrounded by additional concrete walls.

The two plants were designed by the same NSSS vendor; nevertheless, we noted several major differences:

1. Although the reactor coolant systems and major branch piping within the secondary shield (crane) wall were basically the same, the remainder of the piping, particularly the branch piping between the crane wall and the containment as well as the electrical and instrumentation routing, were field run and quite different.

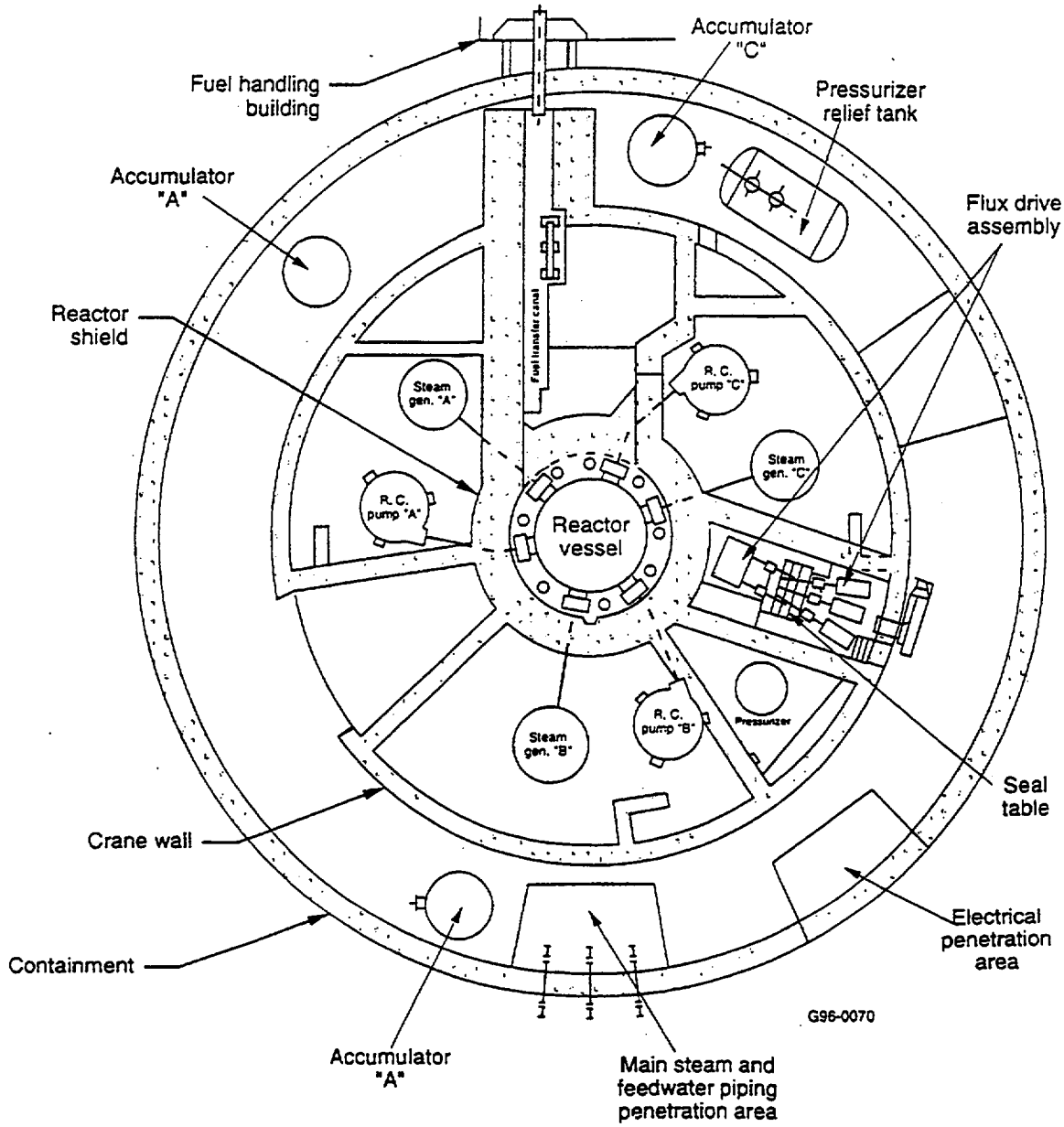

Figure 5-1. Older SEP-III PWR (Westinghouse 3-loop) inside containment plan view.

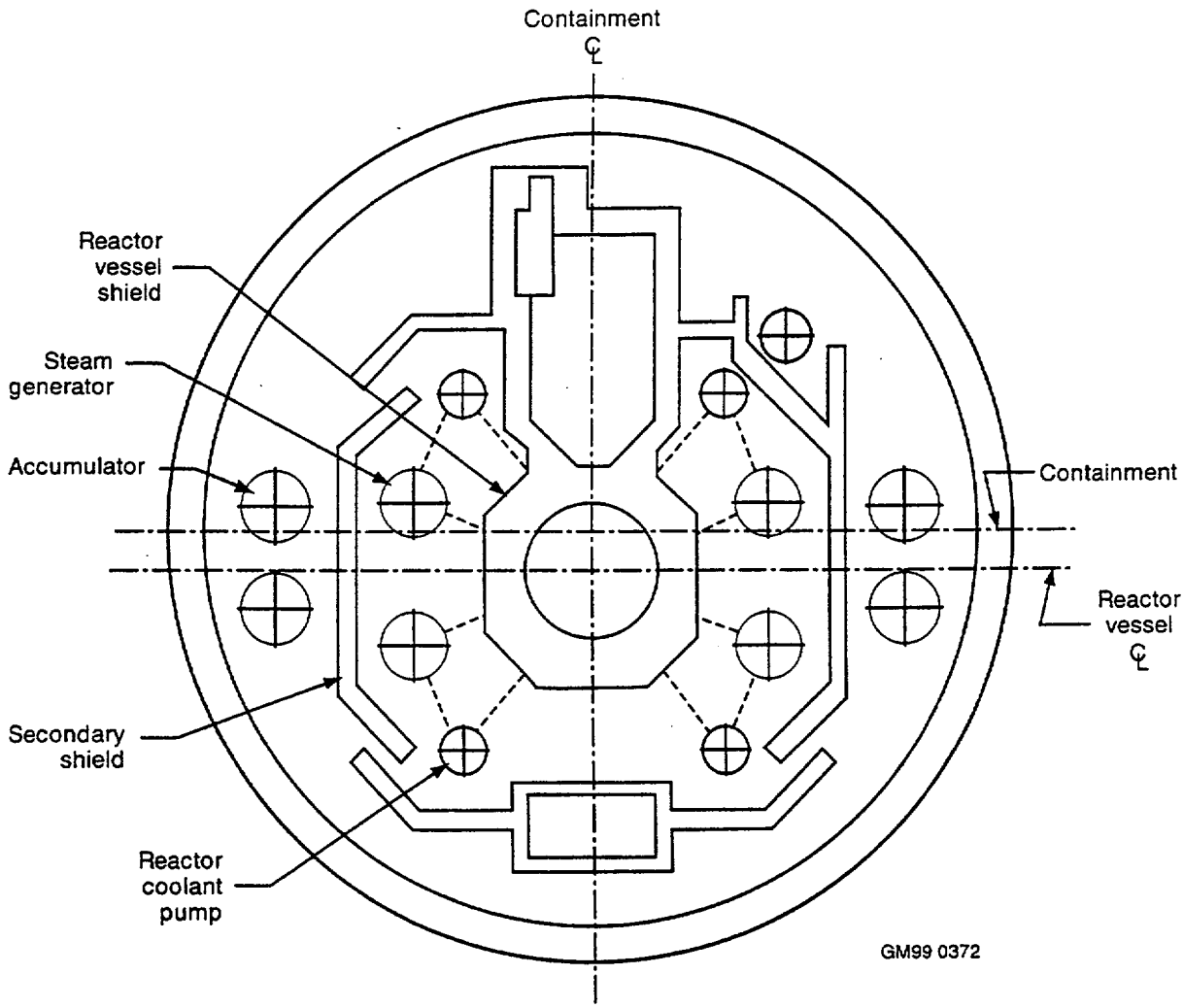

Figure 5-2. Newer SEP-III PWR (Westinghouse 4-loop) inside containment plan view.

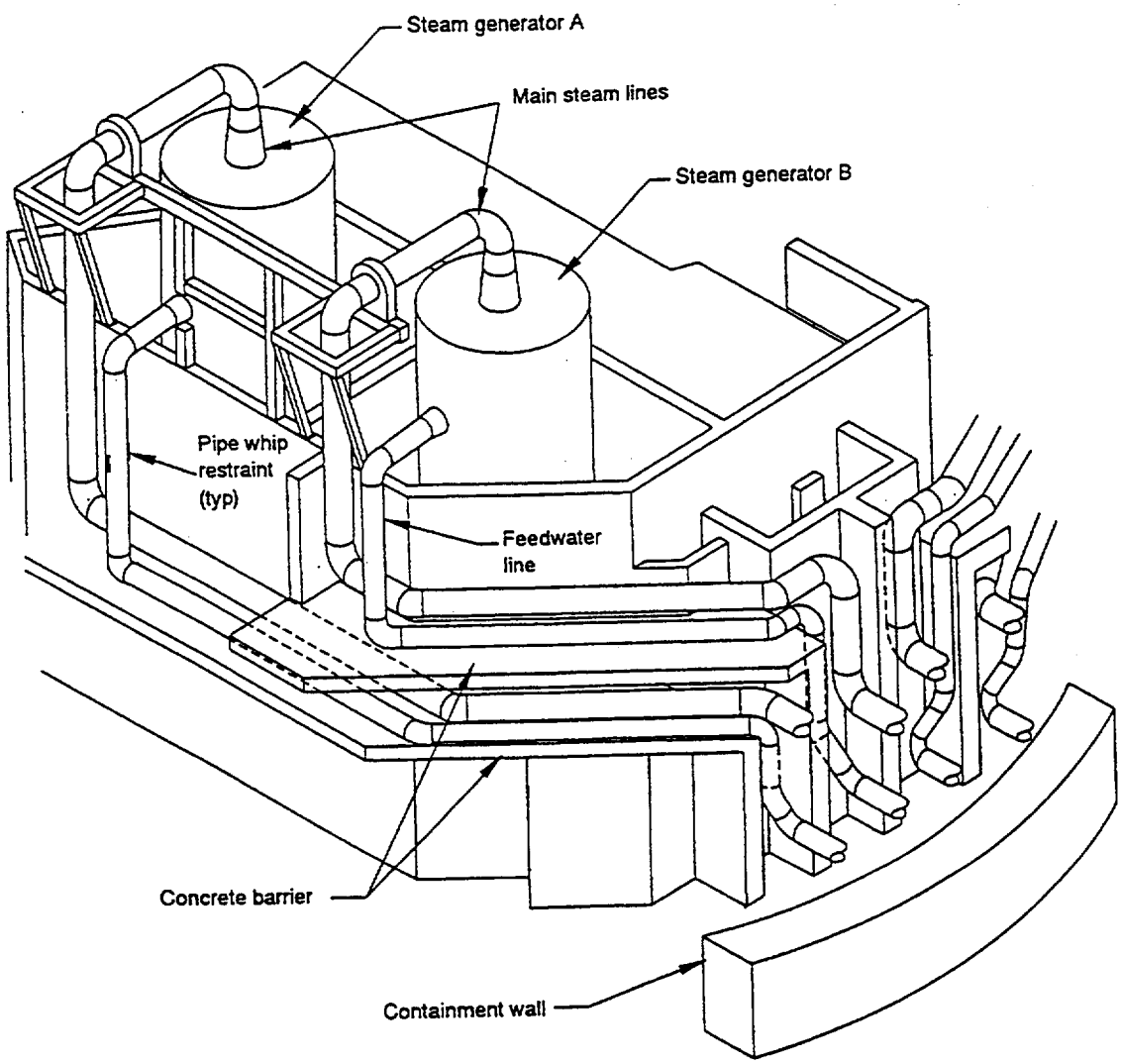

Figure 5-3. Newer SEP-III PWR (Westinghouse 4-loop) separation of main steam and feedwater lines inside containment.

3. On the newer plant that was designed to RG 1.46, the electrical and piping penetrations entered the containment in different quadrants. Some main steam and feedwater lines were routed above the electrical penetration area. However, in the older plant, the electrical and piping penetrations were next to one another at the same elevation.

4. The smaller piping (for example, spray, letdown, surge, RHR, and accumulator injection) on the newer plant designed to RG 1.46 had pipe whip restraints. The restraints on the older plant did not appear to be as numerous.

5. All main steam and feedwater lines on the newer plant were separated by physical (concrete) barriers from the lines in other loops (Figure 5-3). There were pipe whip restraints in the steam generator area. On the older plant the main steam and feedwater lines had no restraints in the steam generator area. However, at this level (an upper elevation in the plant), there did not appear to be any targets for a pipe whip. The main steam and feedwater piping on the older plant had closely spaced large whip restraints in the area of the containment penetration and were strapped to the crane wall along the route from the containment penetration to the steam generators.

Table 5-1 lists the types of containments for the SEP-III PWR plants. The four basic types are shown in Figures 5-4 through 5-7. Most (16) are prestressed concrete atmospheric designs [-1 to +2 psig (-7 to 15 kPA) internal pressure). Surry Units 1 and 2 are reinforced concrete with subatmospheric [-5 to -10 psig (-34 to -69 kPA) internal pressure] designs; D.C. Cook Unit 1 is reinforced concrete with an ice condenser design; Kewaunee and Prairie Island Units 1 and 2 are cylindrical metal designs; and Maine Yankee and Indian Point Units 2 and 3 are reinforced concrete atmospheric designs. The walls of prestressed and reinforced concrete design are shown in Figures 5-8 and 5-9. They are typically 4 ft-6 in. (1.4 m) thick (this varies) with a 1/4- to 1/2-in. (6- to 13-mm) thick steel

Table 5-1. Containment types for PWR SEP-III plants.

Plant	NSSS Vendor	Containment Type
Robinson-2	Westinghouse	Prestressed concrete, atmospheric
Point Beach-1/2	Westinghouse	Prestressed concrete, atmospheric
Surry-1/2	Westinghouse	Reinforced concrete, subatmospheric
Turkey Point-3/4	Westinghouse	Prestressed concrete, atmospheric
Oconee-1,2,3	B&W	Prestressed concrete, atmospheric
Maine Yankee	Combustion Engineering	Reinforced concrete, atmospheric
Kewaunee	Westinghouse	Cylindrical, metal
Fort Calhoun	Combustion Engineering	Prestressed concrete, atmospheric
Zion-1/2	Westinghouse	Prestressed concrete, atmospheric
Indian Point-2/3	Westinghouse	Reinforced concrete, atmospheric
Prairie Island-1/2	Westinghouse	Cylindrical, metal
Arkansas Nuclear One-1	B&W	Prestressed concrete, atmospheric
Calvert Cliffs-1	Combustion Engineering	Prestressed concrete, atmospheric
D. C. Cook-1	Westinghouse	Reinforced concrete, ice condenser
TMI-1	B&W	Prestressed concrete, atmospheric
Trojan	Westinghouse	Prestressed concrete, atmospheric
Millstone-2	Combustion Engineering	Prestressed concrete, atmospheric

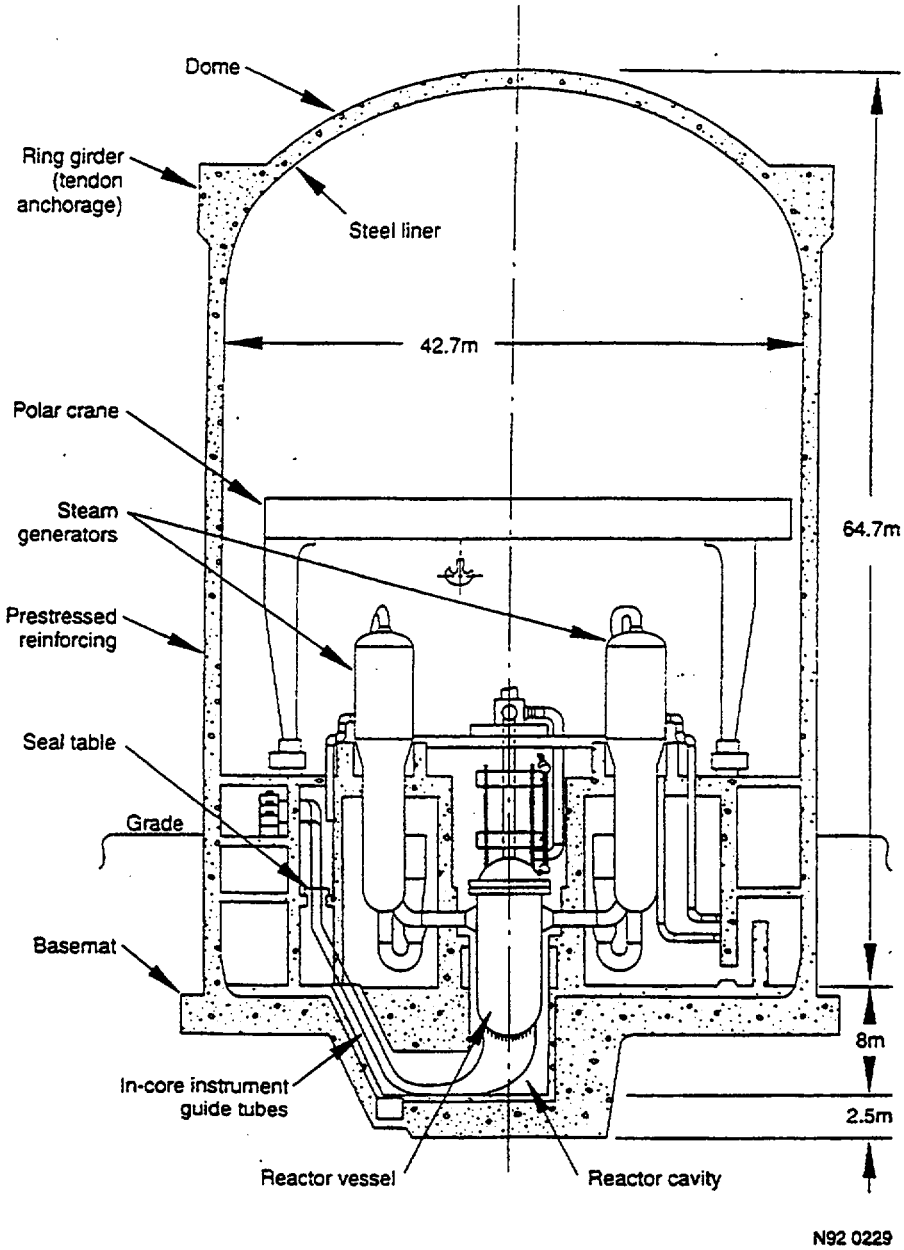

Figure 5-4. PWR prestressed concrete atmospheric design.

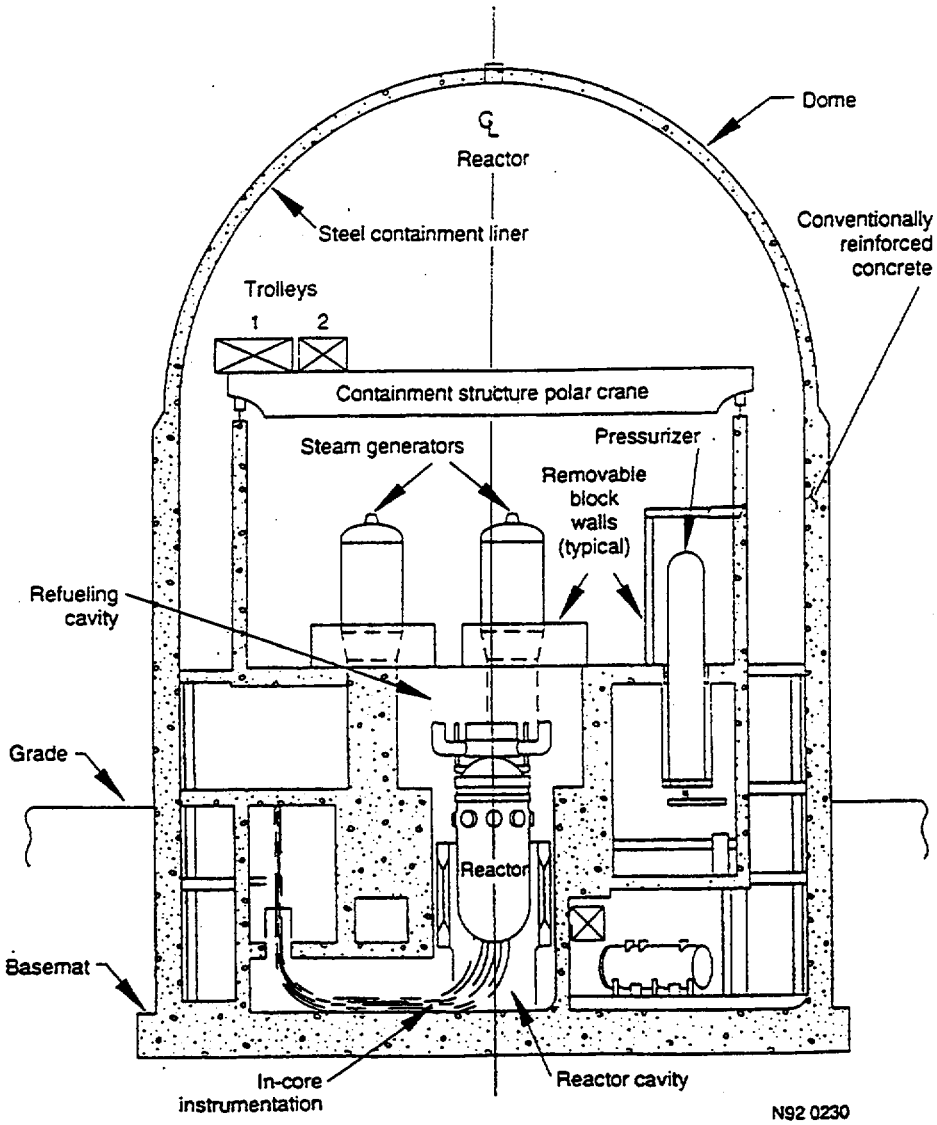

Figure 5-5. PWR reinforced concrete subatmospheric design.

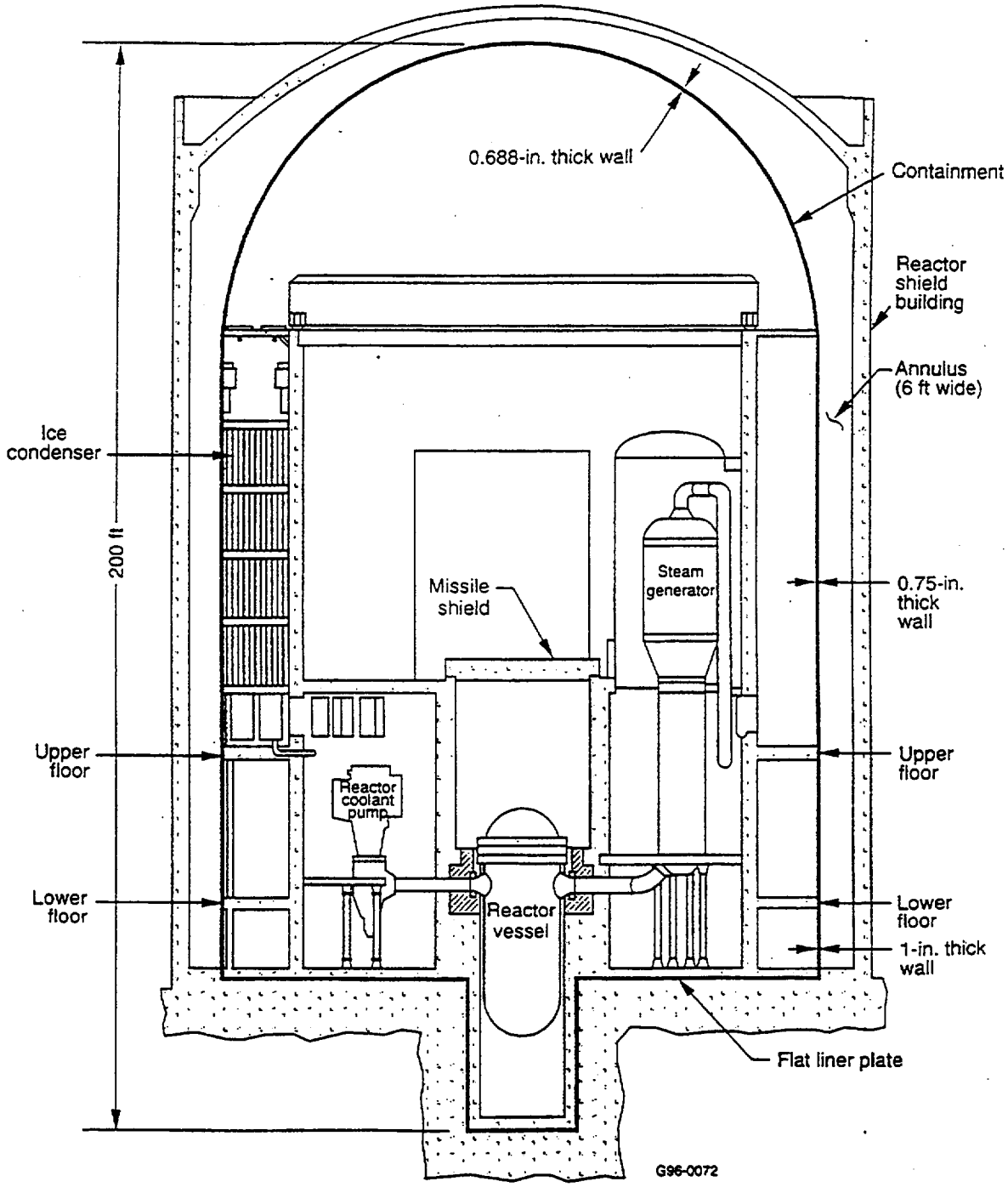

Figure 5-6. PWR prestressed concrete ice condenser design.

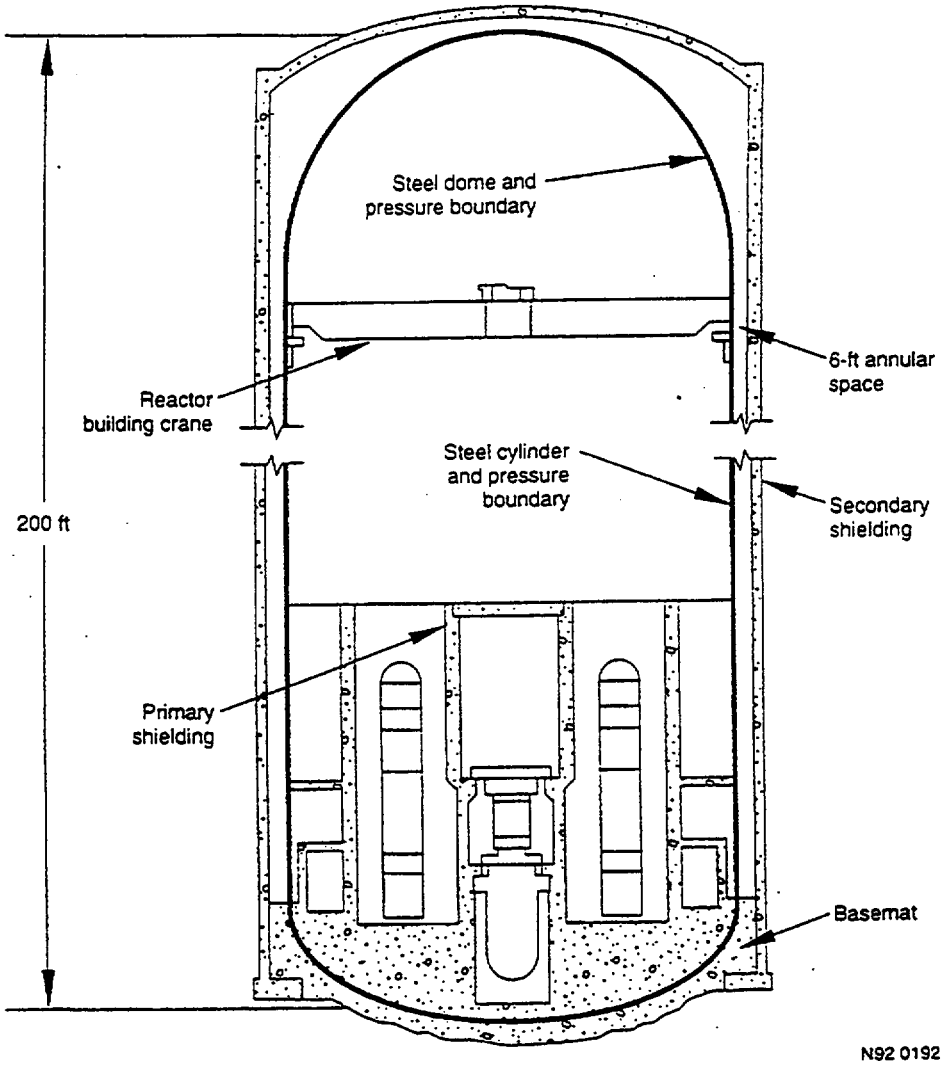

Figure 5-7. PWR cylindrical metal design.

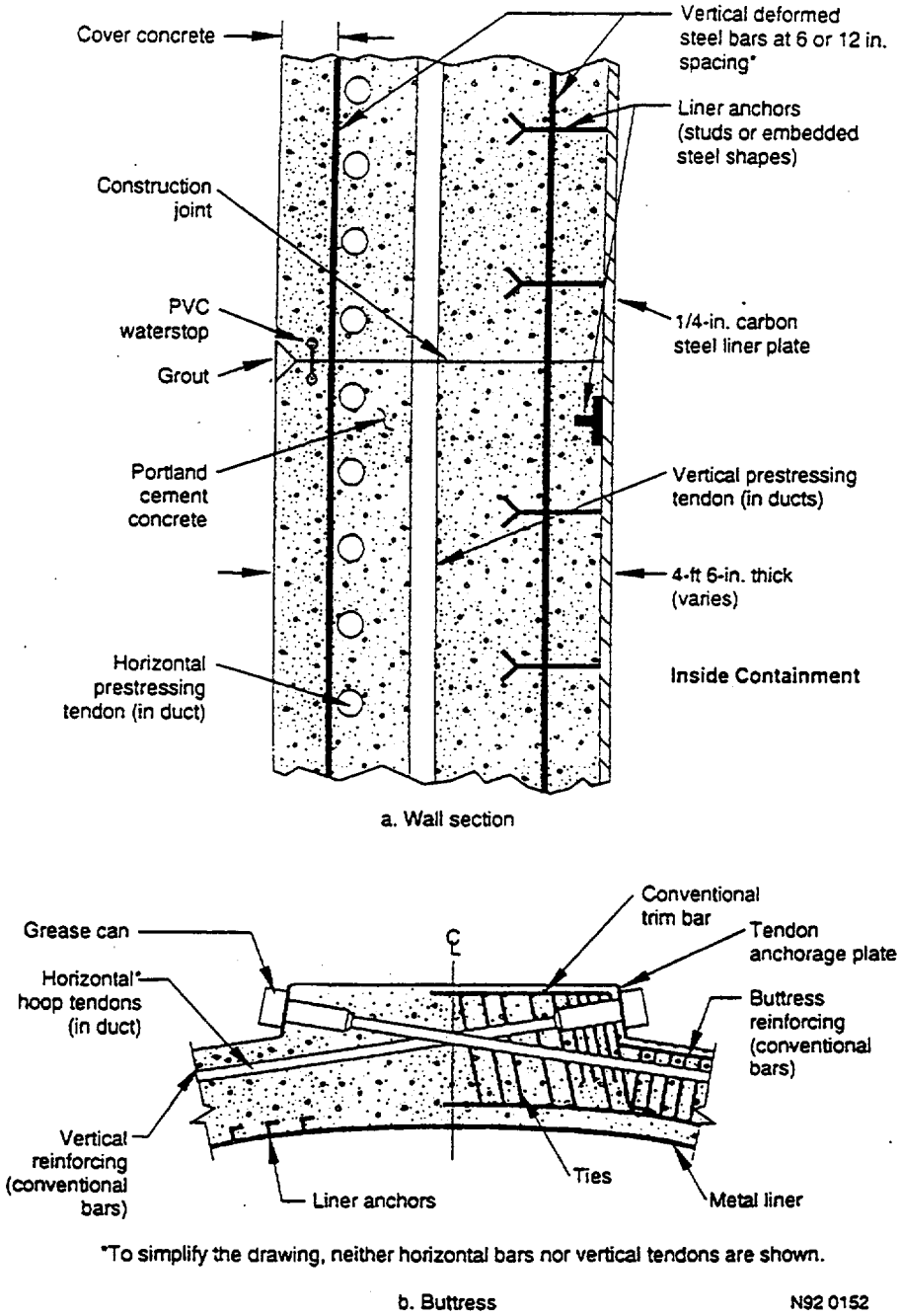

Figure 5-8. Typical PWR prestressed concrete containment wall section.

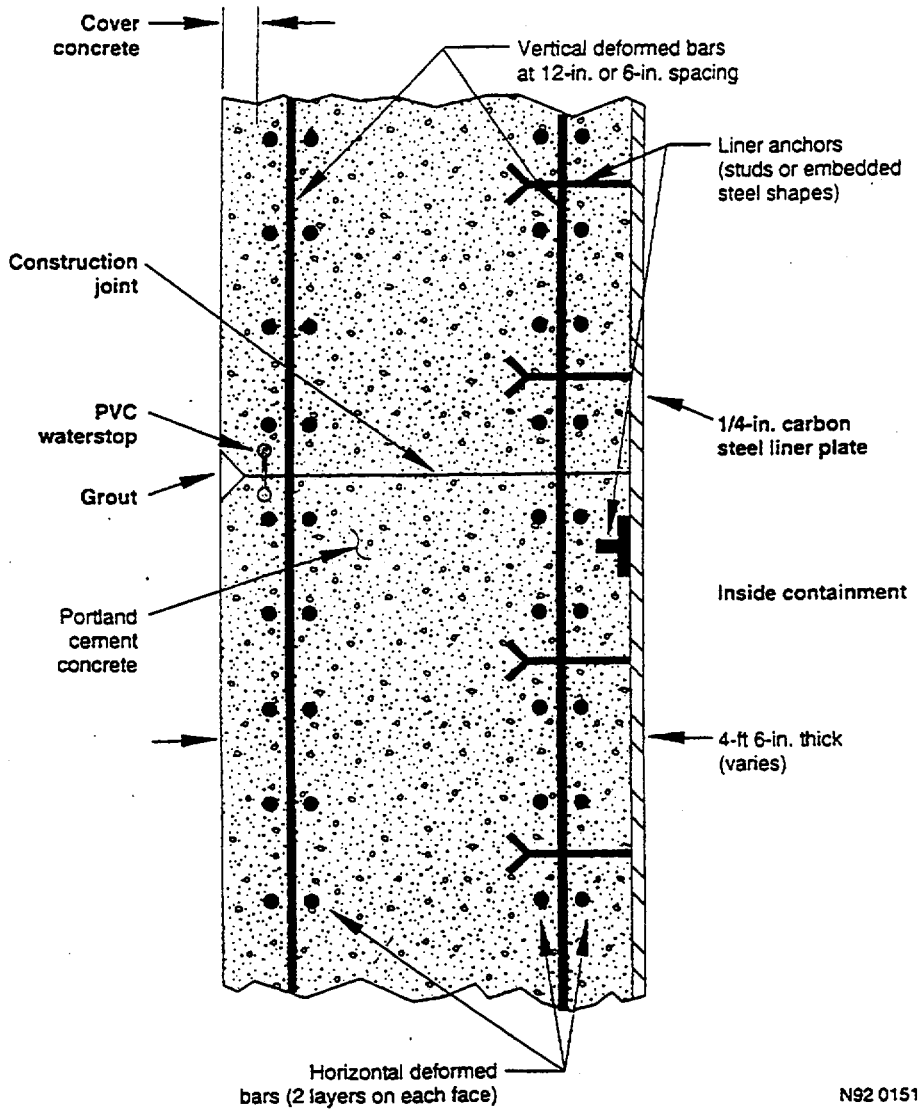

Figure 5-9. Typical PWR reinforced concrete containment wall section.

liner plate. The ice-condenser design has a metal containment typically 0.75- to 1-in. (19- to 25-mm) thick surrounded by a shield building with a 6-ft (1.8-m) annulus. The cylindrical metal containments have a 2-in. (51-mm) thick cylinder capped by a 1-in. (25-mm) thick hemispherical dome. A reactor building surrounds the metal containment, with a 6-ft (1.8-m) annular region between the cylinder and the building. We have not evaluated the capacity of the various types of containment walls for absorbing impacts from pipe whip.

Table 5-2 lists potential pipe break areas (without regard to stress level or fatigue usage) and possible targets that we observed on one or both PWRs visited. Since the newer plant had been designed to RG 1.46, all of these areas had been evaluated and accepted based on analyses. However, since the piping and electrical penetrations appear to be field routed on each plant so that the proximity differs from plant to plant, a walkdown of each high-energy line noting the possible break points from the stress and fatigue analysis is needed to perform an adequate evaluation of pipe break effects. Although the component cooling water (CCW) lines were not on the lists of lines that were observed during the two PWR plant walkdowns, they are added based on the observations of the RBCCW system in the third BWR plant walkdown (see section 3.4.5).

5.2 BWR Plants

Three BWR plants were visited to review the plant layout, the pipe break and jet impingement protection, and the relative location of components to one another. The first of the plants was a newer BWR (BWR/4), which is similar to SEP-III BWRs. Although it is not considered to be one of the SEP-III plants, the other two units at this site are SEP-III plants. All three plants share a single USFAR, licensing SER, and numerous (but not all) other SERs. The second plant that we visited was one of the older SEP-III BWRs (BWR/3), for which the documentation on pipe whip and jet impingement was limited. The licensee considers that the plant is very similar to one of its other plants, Dresden 2, which was an SEP-II plant, and that the pipe break documentation for that plant also applies to the SEP-III plant. Both plants have Mark I containments.

In addition to evaluating the pipe break protection for the specific plant, we also attempted to use the plant layouts to generalize possible break locations and targets for other plants, for which we did not know the pipe break protection history. We did not have access to the plant stress analyses, so we did not know the locations of high stress or fatigue usage greater than 0.1. In our brief tours inside containment, we did not have the time to survey each high-energy line along its entire route, noting the potential break points and targets, but rather we obtained a general overall view from several locations inside the containment. A number of pipe whip restraints were observed on the recirculation lines of both plants, but there appeared to be only minimal, if any, jet impingement shields, other than covers over the vent openings to the torus. The main steam and feedwater lines were not restrained in the upper cylindrical portion of the drywell. Both plants have energy-absorbing pads attached to sections on the interior of the spherical portion of the drywell. However, the designs of the pads and the areas covered were not the same for the two plants.

In contrast to the PWR plants, the BWR plants had minimal compartmentalization. Figure 5-10 shows the drywell design. Most of the inside containment piping is housed between the drywell and the biological shield, which surrounds the reactor pressure vessel. In the annulus between the containment and biological shield are located the recirculation system, including pumps, and portions of many of the high-energy piping systems (for example, main steam, feedwater, RHR, core spray). The electrical and instrumentation lines also enter the containment and are distributed in this annulus. Figure 5-11 is a plan view of this region, showing the relatively large amount of piping in the rather confined space.

Although the two plants were designed by the same NSSS vendor, General Electric, we noted several major differences:

Table 5-2. PWR pipe break locations and potential targets based on observations from two plant visits.

Pipe Break Location	Target
Pressurizer safety/relief	Spray line, pressurizer instrumentation
Spray line	Pressurizer instrumentation
Steam generator blowdown	DP level instrumentation (same loop)
Reactor coolant system (leak)	Loop instrumentation (same loop) (leak) or branch piping (break)
Reactor coolant system	Connecting smaller piping in same loop (e.g., spray, safety injection)
Main steam, feedwater, or any other high energy line	Any plant electrical and instrumentation circuit is possible (except in-core instrumentation) depending on line routing
RHR/safety injection	CVCS, accumulator tank (one)
Safety injection (break) reactor coolant system (leak)	RCP seal (one loop)
Main steam	Feedwater (same loop)
Main steam, feedwater	Containment shell, CCW

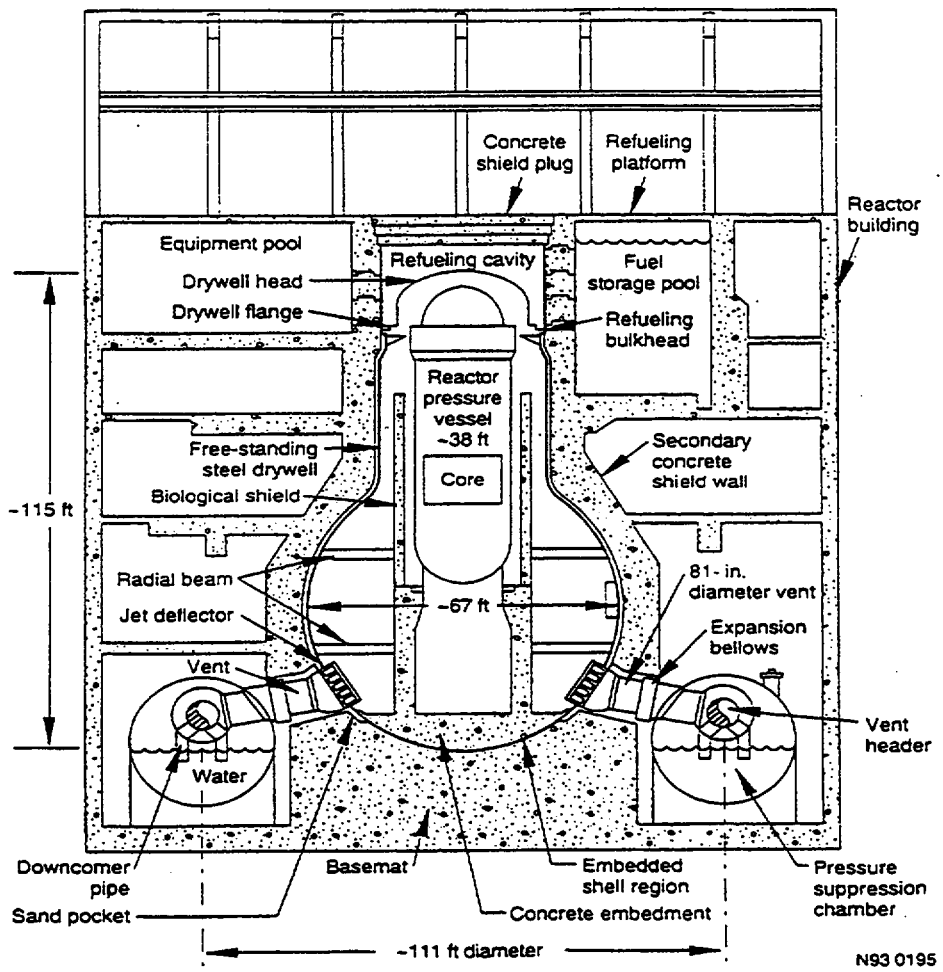

Figure 5-10. Elevation view of BWR Mark I metal containment and reactor building.

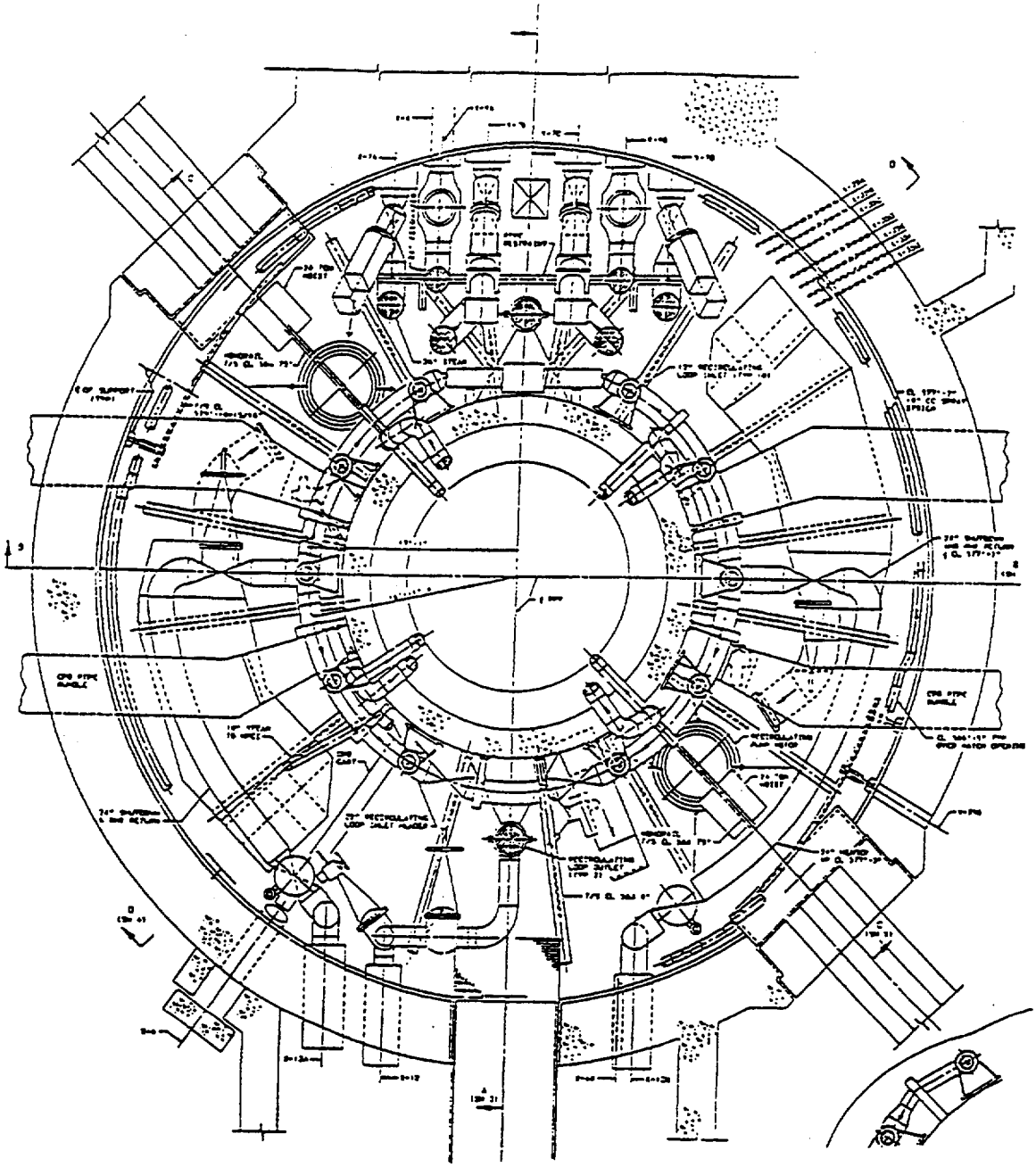

Figure 5-11. Plan view of BWR Mark I metal containment spherical region.

1. Most of the major piping systems (for example, the recirculation, main steam, and feedwater) are basically the same; however, the remainder of the piping and the electrical and instrumentation routing were field run and quite different.

2. On the newer plant, the electrical and instrumentation lines for different trains entered the containment in different quadrants 180 degrees apart. However, in the older plant, it appeared that no attention had been given to separating the different trains.

3. The main steam and feedwater lines on the newer plant had pipe whip restraints added in the containment penetration area. Such restraints were not present on the older plant.

All the SEP-III BWR containments are Mark I steel designs with the exception of Brunswick Unit 2, which is a Mark I concrete design (Table 5-3). A reinforced concrete wall, 4- to 6-ft (1.2- to 1.8-m) thick and called the secondary shield wall, surrounds the drywell (Figure 5-10). There is a 2- to 3-in. (51- to 76-mm) gap between the secondary shield wall and the drywell, typically filled with a compressible material during construction to maintain proper spacing. The fill material was removed at some of the Mark-I plants after construction, but left in place at other plants. Moisture trapped in the filler material may cause corrosion of the drywell exterior surface. The filler material may degrade, and the aggressive chemicals in the material may corrode the outside surface of the drywell.

Table 5-4 lists potential pipe break areas (without regard to stress level or fatigue usage) and possible targets that we observed on one or both BWRs visited. The two plants had pipe whip restraints on both suction and discharge portions of the recirculation piping. However, the recirculation piping is not restrained on at least one other SEP-III plant. Although both plants had energy-absorbing pads mounted on portions of the inside surface of the drywell, not all SEP-III plants contain such pads. The piping and electrical penetrations appear to be field routed on each plant so that the proximity differs from plant to plant; therefore, a walkdown of each high-energy line noting the possible break points from the stress and fatigue analysis is needed to perform an adequate evaluation of pipe break effects.

Table 5-3. Containment types for BWR SEP-III plants.

Plant	BWR Type	Containment Type	Fill Material	Fill Removed
Nine Mile Point-1	2	Mark I, steel	Fiberglass foam	—
Monticello	3	Mark I, steel	Polyethylene strips	yes
Dresden-3	3	Mark I, steel	Polyethylene foam	no
Pilgrim	3	Mark I, steel	Ethafoam	yes
Quad Cities-1/2	3	Mark I, steel	Polyethylene foam	no
Vermont Yankee	4	Mark I, steel	Styrofoam	no
Browns Ferry-1/2	4	Mark I, steel	Polyurethane	no
Peach Bottom-2/3	4	Mark I, steel	Polyethylene strips	no
Duane Arnold	4	Mark I, steel	Polyurethane foam	yes
Cooper	4	Mark I, steel	Urethane foam	no
Hatch-1	4	Mark I, steel	Ethafoam	yes
Fitzpatrick	4	Mark I, steel	Ethafoam	yes
Brunswick-2	4	Mark I, concrete	—	—

Table 5-4. BWR pipe break locations and potential targets based on observations from three plant visits.

Source	Target
Main steam/feedwater	Containment shell, RHR, RCIC, RWCU in penetration area, core spray, RBCCW
Recirculation	CRD bundle, standby liquid control, jet pump instrumentation, steam to HPCI, containment shell (if piping is not restrained), RBCCW
RHR	CRD bundle, single recirculation line, containment shell
Main steam	Feedwater (one ring)
Main steam, feedwater, recirculation, or any other high-energy line	Any electrical or instrumentation line is possible depending on line routing

6. RANKING AND QUANTIFICATION OF SEP-III PLANT PIPE BREAKS INSIDE CONTAINMENT

In Section 5, lists of potentially significant pipe break events inside containment were generated for both BWRs and PWRs. In Section 6.1, the pipe break events were ranked such that only the most significant need to be considered in detail. The significant events were then quantified in more detail in Section 6.2 to provide quantitative estimates of the change in core damage frequency resulting from such events. The quantification was performed conservatively, using the worst possible effects of the pipe break based on a general knowledge of the SEP-III plant layouts. In many cases, a pipe break scenario may not be possible at a specific SEP-III plant because of its physical layout and pipe restraints.

6.1 Event Ranking

Pipe break events were ranked according to impact on core damage frequency (CDF), containment failure, and offsite consequences. The ranking categories are the following:

1. High — Potential to increase CDF or offsite consequences by more than 100% (or containment failure probability is nearly 1.0)

2. Medium — Potential to increase CDF or offsite consequences by 1 to 100% (or containment failure probability is in the range 0.01 to nearly 1.0)

3. Low — Potential to increase offsite consequences by less than 1% (or containment failure probability is less than 0.01).

The rankings were performed qualitatively; no sophisticated probabilistic risk assessment model was run to quantitatively determine impacts on CDF, containment failure, and offsite consequences. However, the Individual Plant Examination (IPE) studies for three of the five plants visited were used for guidance in the qualitative ranking process. (The IPE for the fourth plant was not available at the time, and the fifth plant visit was several years after the analysis was completed.) The matrix presented in Table 6-1 was used to help in the ranking process for offsite consequences.

Table 6-1. Ranking scheme that illustrates the impact that containment failure and CDF have on offsite consequences.

	Containment Failure Impact		
Core Damage Impact	High (Direct Failure)	Medium	Low
High	High	High	Medium
Medium	High	Medium	Low
Low	Medium	Low	Low

A similar effort, documented in NUREG/CR-6027 (Ware et al. 1993), was used for guidance in this effort.

Results of the ranking effort for BWRs are presented in Table 6-2. Of the 16 BWR pipe break events, one was ranked high in terms of CDF impact. Five other events were ranked medium. The remaining nine events were ranked low. Also shown in Table 6-2 are the rankings based on containment impact and offsite consequences.

Results for PWRs are presented in Table 6-3. Of the 17 PWR pipe break events, one was ranked high and the other 16 were ranked low. However, two of the events ranked low in CDF impact were ranked high in containment impact.

6.2 Event Quantification

The pipe break events inside containment listed in Tables 6-2 and 6-3 that have High or Medium rankings for CDF impact were quantified in more detail. A representative CDF calculation is presented below:

$$CDF = (IE)(PIPETYPE)(TYPEFRAC)(RUPTPROB)(SYSTFAIL)$$

Table 6-2. Ranking of BWR pipe break events inside containment.

Pipe Break—Affected System(s)	CDF Impact	Containment Failure Impact	Offsite Consequences Impact	Comments
1. MS or FW—Containment shell and safety systems entering containment	Medium	High	High	Causes scram (large LOCA); breaches (pipe whip) containment shell; fails (containment buckling) all coolant injection safety systems needed for large LOCA response (core spray or LPCI)
2. MS or FW – RHR[a]	Low	Medium	Low	Causes scram (large LOCA); fails (pipe whip) 1 LPCI loop (other LPCI loop and core spray available) and, therefore, 1 of 2 RHR loops (RHR also important for containment overpressure/ overtemperature protection)
3. MS or FW—RCIC or RWCU[a]	Low	Low	Low	Causes scram (large LOCA); fails (pipe whip) RCIC or RWCU (not needed for large LOCA response or for containment protection)
4. MS or FW – Core spray[a]	Low	Low	Low	Causes scram (large LOCA); fails (pipe whip) 1 core spray loop (other core spray loop and LPCI available)
5. Recirculation—CRD bundle(s)[a]	Medium	Medium	Medium	Causes scram (large LOCA); fails (pipe whip or jet impingement) affected control rods (fail to insert because of loss of CRD flow and loss of PCS pressure due to LOCA), resulting in failure to scram
6. Recirculation – SLCS[a]	Low	Low	Low	Causes scram (large LOCA); fails (pipe whip) SLCS (not needed for large LOCA response)
7. Recirculation—Jet pump instrumentation	Low	Low	Low	Causes scram (large LOCA); fails (pipe whip) instrumentation (not needed for large LOCA response)
8. Recirculation—Main steam supply to HPCI[a]	Low	Low	Low	Causes scram (large LOCA); fails (pipe whip) HPCI (not needed for large LOCA response)
9. Recirculation—Containment shell and safety systems entering containment	Medium	High	High	Causes scram (large LOCA); breaches (pipe whip) containment shell; fails (containment buckling) all coolant injection safety systems needed for large LOCA response (core spray or LPCI)
10. RHR—CRD bundle(s)[a]	Medium	Medium	Medium	Causes scram (large LOCA); fails (pipe whip or jet impingement) affected control rods (fail to insert because of loss of CRD flow and loss of PCS pressure due to LOCA), resulting in failure to scram

Table 6-2. (continued).

Pipe Break—Affected System(s)	CDF Impact	Containment Failure Impact	Offsite Consequences Impact	Comments
11. RHR—Single recirculation line[a]	Low	Medium	Low	Causes scram (large LOCA); fails (pipe whip) reactor coolant system piping that can affect coolant injection if discharge valves do not close
12. RHR – Containment shell and safety systems entering containment	Medium or Low	High	High	Causes scram (large LOCA); breaches (pipe whip) containment shell; fails (containment buckling) all coolant injection safety systems needed for large LOCA response (core spray or LPCI)
13. MS—Feedwater (1 ring)[a]	Low	Low	Low	Causes scram (large LOCA); fails (pipe whip) part of FW (not needed for large LOCA response)
14. HELB – Containment instrumentation and control	High	Medium	High	Causes scram (large LOCA, assumed); fails (pipe whip or jet impingement) actuation for all coolant injection systems needed for large LOCA response (core spray or LPCI)
15. HELB—Containment electrical power	Low	Low	Low	Causes scram (large LOCA, assumed); fails (pipe whip or jet impingement) power to recirculation pump discharge valves (they fail open)(valves must close only for recirculation line breaks)
16. HELB—RBCCW	Low	High	Medium	Causes scram (large LOCA); breaches containment through RBCCW piping and renders RHR heat exchangers ineffective

Note:

a. These multiple pipe breaks are or may be beyond design basis. It is not known if safety systems can handle such events without core damage or containment damage. If the safety systems are ineffective, then the CDF impact should be changed to "High". (Because containments can usually withstand much higher pressures than their design pressures, the containment impact is unchanged.)

Table 6-3. Ranking of PWR pipe break events inside containment.

Pipe Break—Affected System(s)	CDF Impact	Containment Failure Impact	Offsite Consequences Impact	Comments
1. Pressurizer safety or relief—Pressurizer spray	Low	Low	Low	Causes scram (small LOCA); fails (pipe whip) pressurizer spray (not needed for small LOCA response)
2. Pressurizer safety or relief—Pressurizer instrumentation	Low	Low	Low	Causes scram (small LOCA); fails (pipe whip or jet impingement) pressurizer instrumentation and PORV control
3. Pressurizer spray—Pressurizer instrumentation	Low	Low	Low	Causes eventual scram (turbine trip initiator category); fails (pipe whip or jet impingement) pressurizer instrumentation and PORV control
4. SG blowdown—SG dp level instrumentation (same loop) in 3- or 4-loop plant	Low	Low	Low	Causes scram (turbine trip initiator category); fails (pipe whip or jet impingement) SG instrumentation (other 2 or 3 SGs and feed and bleed available for decay heat removal)
5. SG blowdown—SG dp level instrumentation (same loop) in 2-loop plant	Low	Low	Low	Causes scram (turbine trip initiator category); fails (pipe whip or jet impingement) SG instrumentation (other SG and feed and bleed available for decay heat removal)
6. RCS (leak) or branch pipe—RCS loop instrumentation (same loop)	Low	Low	Low	Causes scram (small LOCA); fails (pipe whip or jet impingement) RCS loop instrumentation (not needed for small LOCA response)
7. RCS (leak)—SI	Low	Low	Low	Causes scram (small LOCA); fails (jet impingement) 1 SI loop (other loop and other systems available)
8. RCS (leak)—Pressurizer spray	Low	Low	Low	Causes scram (small LOCA); fails (jet impingement) pressurizer spray (not needed for small LOCA response)
9. HELB—Containment instrumentation and control	High	High	High	Causes scram (LOCA or other type of initiator); fails (pipe whip or jet impingement) actuation for safety systems needed for LOCA or other type of initiator response and CFCUs and containment spray

Table 6-3. (continued).

Pipe Break—Affected System(s)	CDF Impact	Containment Failure Impact	Offsite Consequences Impact	Comments
10. HELB—Containment electrical power	Low	Medium	Medium	Causes scram (LOCA or other type of initiator); fails (pipe whip or jet impingement) power to PORVs and CFCUs
11. RHR—Safety-related piping (smaller size than RHR) in same loop	Low	Medium	Medium	Causes scram (large LOCA); fails (pipe whip) 1 of 4 RHR injection paths
12. SI—Safety-related piping (smaller size than SI) in same loop	Low	Low	Low	Causes scram (medium LOCA); fails (pipe whip) 1 of several SI loops
13. MS—FW (same loop) in 3- or 4-loop plant[a]	Low	Low	Low	Causes scram (steamline break inside containment); fails (pipe whip) feedwater (same loop), resulting in loss of affected SG (other SGs and feed and bleed available for decay heat removal)
14. MS—FW (same loop) in 2-loop plant[a]	Low	Low	Low	Causes scram (steamline break inside containment); fails (pipe whip) feedwater (same loop), resulting in loss of affected SG (other SG and feed and bleed available for decay heat removal)
15. MS or FW—Containment shell in reinforced concrete containment	Low	Low	Low	Causes scram (steamline or feedwater break inside containment); impacts (pipe whip) containment but only causes cracks in concrete
16. MS or FW—Containment shell in free-standing steel containment	Low	High	Medium	Causes scram (steamline or feedwater break inside containment); fails (pipe whip) containment
17. MS or FW—CCW	Low	High	Medium	Causes scram (steamline or feedwater break inside containment); breaches containment through failed CCW piping and renders RHR heat exchangers ineffective

Note:

a. These multiple pipe breaks are or may be beyond design basis. It is not known if safety systems can handle such events without core damage or containment damage. If the safety systems are ineffective, then the CDF impact should be changed to "High". (Because containments can usually withstand much higher pressures than their design pressures, the containment impact is unchanged.)

where

CDF = core damage frequency resulting from the pipe rupture event in question

IE = pipe rupture (or leak) initiating event frequency

PIPETYPE = fraction of piping considered in IE that is from the system in question (i.e., RHR, SI, other)

TYPEFRAC = fraction of system piping (i.e., RHR, SI, other) that can cause another system failure from pipe whip or jet impingement

RUPTPROB = probability of pipe whip or jet impingement causing another system failure

SYSTFAIL = probability of additional system(s) failing randomly (not caused by the pipe break) such that core damage occurs.

All of the events in the above equation were modeled as lognormal events (typical in most probabilistic risk assessments), each characterized by a mean value (frequency or probability) and an error factor (95th percentile/median). The frequency for the initiating event, IE, was obtained from Section 2 in this document. PIPETYPE, TYPEFRAC, and RUPTPROB were estimated based on general knowledge of PWRs and BWRs and information from actual plant visits. Finally, SYSTFAIL (if needed) was estimated from the IPEs for the Pilgrim and Trojan nuclear power plants.

Quantification of the above equation was performed by multiplying the mean values of the events in the equation. The uncertainty bounds were estimated by using the method of moments (*PRA Procedures Guide*, USNRC 1983h). The method is explained below:

1. Given X and Y with mean values (Ms) and error factors (EFs), find the mean and error factor of XY.

2. Determine the mean value of XY

   $M_{XY} = M_X M_Y$

3. Determine the variances (Vs) of X and Y

   $V_{X \text{ or } Y} = (M_{X \text{ or } Y}2)\{\exp[((\ln EF_{X \text{ or } Y})/1.645)^2] - 1\}$

4. Determine the variance of XY

   $V_{XY} = M_X2\, V_Y + M_Y2\, V_X + V_X V_Y$

5. Convert the variance to an error factor

   $EF_{XY} = \exp\{1.645[\ln (1 + V_{XY} / M_{XY}2)]^{0.5}\}$

6. Given the mean and error factor of XY, determine the percentiles of the distribution

   Median (50th percentile) = $M_{XY}\{\exp[-0.5[((\ln EF_{XY})/1.645)^2]\}$

   95th percentile = $(\text{Median}_{XY})(EF_{XY})$

   5th percentile = $(\text{Median}_{XY}) / EF_{XY}$.

A formal uncertainty analysis was also performed using the SAPHIRE code suite and Monte Carlo sampling. A Latin hypercube was used with 1000 samples. Both methods resulted in essentially the same results, as can be seen in Tables 6-4 and 6-5.

The events quantified in Tables 6-4 and 6-5 are not events included in representative probabilistic risk assessments (PRAs) of nuclear power plants. Therefore, the event CDFs can be considered to be additional contributions to a plant's base CDF (from its IPE).

Quantification of each pipe break event with a high or medium CDF impact (from Tables 6-2 and 6-3) is presented below.

Table 6-4. Quantification of dominant BWR pipe-break events inside containment.

Pipe Break—Affected System(s)	Change in CDF Resulting from Pipe Break Event				
	Mean Frequency (events/rx-yr)	Error Factor[a]	5th Percentile (events/rx-yr)	Median (events/rx-yr)	95th Percentile (events/rx-yr)
1. MS or FW—Containment shell and safety systems entering containment	2.0E-6 (2.0E-6)[b]	13.5 (13.6)	4.2E-8 (3.9E-8)	5.7E-7 (5.6E-7)	7.7E-6 (7.6E-6)
5. Recirculation—CRD bundle(s)	5.0E-6 (5.0E-6)	14.1 (14.3)	9.8E-8 (8.9E-8)	1.4E-6 (1.4E-6)	1.9E-5 (2.0E-5)
9. Recirculation – Containment shell and safety systems entering containment	4.0E-6 (4.0E-6)	13.6 (11.8)	8.4E-8 (8.3E-8)	1.1E-6 (1.1E-6)	1.5E-5 (1.3E-5)
10. RHR—CRD bundle(s)	2.5E-6 (2.5E-6)	11.5 (11.2)	7.3E-8 (7.3E-8)	8.3E-7 (8.2E-7)	9.6E-6 (9.2E-6)
12. RHR—Containment shell and safety systems entering containment[c]	4.0E-7 (4.0 E-7)	19.8 (17.7)	3.9E-9 (3.9E-9)	7.7E-8 (7.9E-8)	1.5E-6 (1.4E-6)
14. HELB—Containment instrumentation and control	3.8E-5 (3.8E-5)	11.3 (10.8)	1.1E-6 (1.0E-6)	1.3E-5 (1.2E-5)	1.4E-4 (1.3E-4)
16. HELB—RBCCW[c]	2.0E-8 (2.0E-8)	16.8 (16.7)	2.7E-10 (2.6E-10)	4.6E-9 (4.3E-9)	7.7E-8 (7.2E-8)

Notes:

a. Error factor = 95th percentile/median.

b. Numbers in parentheses are from SAPPHIRE runs.

c. This event is presented because its containment failure impact is high, even though the core damage frequency impact ranking is low.

Table 6-5. Quantification of dominant PWR pipe-break events inside containment.

Pipe Break—Affected System(s)	Change in CDF Resulting from Pipe Break Event				
	Mean Frequency (events/rx-yr)	Error Factor[a]	5th Percentile (events/rx-yr)	Median (events/rx-yr)	95th Percentile (events/rx-yr)
9. HELB—Containment instrumentation and control	7.5E-5 (7.5E-5)[b]	12.2 (12.3)	1.9E-6 (1.8E-6)	2.4E-5 (2.2E-5)	2.9E-4 (2.7E-4)
16. MS or FW – Containment shell in free-standing containment[c]	1.4E-9 (1.4E-9)	15.0 (12.1)	2.0E-11 (4.6E-11)	3.7E-10 (4.3E-10)	6.0E-9 (5.2E-9)
17. MS or FW—CCW[c]	1.0E-7 (1.0E-7)	16.8 (15.5)	1.4E-9 (1.3E-9)	2.3E-8 (2.2E-8)	3.9E-7 (3.4E-7)

Notes:

a. Error factor = 95th percentile/median.

b. Numbers in parentheses are from SAPPHIRE runs.

c. This event is presented because its containment failure impact is high, even though the core damage frequency impact ranking is low.

BWR Event 1

This event involves a rupture of the MS or FW piping inside containment. Pipe whip causes failure of the containment metal shell. Resulting overpressure in the containment annulus (between the containment shell and the containment concrete structure) fails all coolant injection systems (whose piping penetrate the containment shell) required for a large LOCA response. Cooling injection failure could be caused either by displacements of the containment crimping or shearing the piping, or by steam escaping into the auxiliary areas failing the supporting systems (e.g., pump failure for EQ reasons). The equation for CDF is the following:

$$CDF = (IE)(PIPETYPE)(TYPEFRAC)(RUPTPROB_1)(RUPTPROB_2)$$

The equation factors are as follows:

Factor	Mean Value (events /rx-yr)	Error Factor	Lower Bound (5th percentile) (events/rx-yr)	Upper Bound (95th percentile) (events/rx-yr)	Factor Description
IE	1.0E-4	10	3.8E-6	3.8E-4	Large LOCA (DEGB) in BWR primary piping inside containment
PIPETYPE	4.0E-1	1.25 Assumed	3.2E-1	5.0E-1	Fraction of BWR primary piping inside containment that is MS or FW
TYPEFRAC	2.5E-1	1.5 Assumed	1.6E-1	3.6E-1	Fraction of MS or FW piping that can impact containment shell from pipe whip
$RUPTPROB_1$	2.5E-1	3 Assumed	6.7E-2	6.0E-1	Probability of pipe whip rupturing containment shell
$RUPTPROB_2$	8.0E-1	1.25 Assumed	6.4E-1	1.0	Probability of overpressure in containment annulus failing injection system piping penetrating containment

Results of the quantification of the core damage frequency are as follows:

Mean	=	2.0E-6/rx-yr
EF	=	13.5
5th percentile	=	4.2E-8/rx-yr
Median	=	5.7E-7/rx-yr
95th percentile	=	7.7E-6/rx-yr

BWR Event 5

This event involves a rupture of the recirculation piping inside containment. Pipe whip causes failure of a number of CRD bundles by crimping of the insert/withdraw lines. The result is a large LOCA with failure to scram the reactor. This was assumed to lead directly to core damage. The equation for CDF is the following:

CDF = (IE)(PIPETYPE)(TYPEFRAC)(RUPTPROB)

The equation factors are as follows:

Factor	Mean Value (events/rx-yr)	Error Factor	Lower Bound (5th percentile) (events/rx-yr)	Upper Bound (95th percentile) (events/rx-yr)	Factor Description
IE	1.0E-4	10	3.8E-6	3.8E-4	Large LOCA in BWR primary piping inside containment
PIPETYPE	2.0E-1	2 Assumed	9.2E-2	3.7E-1	Fraction of BWR primary piping inside containment that is recirculation
TYPEFRAC	2.5E-1	3 Assumed	6.7E-2	6.0E-1	Fraction of recirculation piping that can impact CRD(s) lines by pipe whip or jet impingement
RUPTPROB	1.0	1	1.0	1.0	Probability of pipe whip or jet impingement failing CRD(s) lines

Results of the quantification of the core damage frequency are as follows:

Mean	=	5.0E-6/rx-yr
EF	=	14.1
5th percentile	=	9.8E-8/rx-yr
Median	=	1.4E-6/rx-yr
95th percentile	=	1.9E-5/rx-yr

This is a simplified analysis of CRD failure. A more comprehensive analysis was conducted as part of GSI-80 (Emrit et al., 1993).

BWR Event 9

This event involves a rupture of the recirculation piping inside containment. Pipe whip causes failure of the containment metal shell. Resulting overpressure in the containment annulus between the containment shell and the containment concrete structure fails all coolant injection systems (whose piping penetrate the containment shell) required for a large LOCA response. Cooling injection failure could be caused either by displacements of the containment crimping or shearing the piping, or by steam escaping into the auxiliary areas failing the supporting systems (e.g., pump failure for EQ reasons). The equation for CDF is the following:

$$CDF = (IE)(PIPETYPE)(TYPEFRAC)(RUPTPROB_1)(RUPTPROB_2)$$

The equation factors are as follows:

Factor	Mean Value (events/rx-yr)	Error Factor	Lower Bound (5th percentile) (events/rx-yr)	Upper Bound (95th percentile) (events/rx-yr)	Factor Description
IE	1.0E-4	10	3.8E-6	3.8E-4	Large LOCA in BWR primary piping inside containment
PIPETYPE	2.0E-1	2 Assumed	9.2E-2	3.7E-1	Fraction of BWR primary piping inside containment that is recirculation
TYPEFRAC	5.0E-1	2 Assumed	2.3E-1	9.2E-1	Fraction of recirculation piping that can impact containment shell from pipe whip
$RUPTPROB_1$	5.0E-1	2 Assumed	2.3E-1	9.2E-1	Probability of pipe whip rupturing containment shell (for plants with no restraints on recirculation lines
$RUPTPROB_2$	8.0E-1	1.25 Assumed	6.4E-1	1.0	Probability of overpressure in containment annulus failing injection system piping penetrating containment

Results of the quantification of the core damage frequency are as follows:

Mean	=	4.0E-6/rx-yr
EF	=	13.6
5th percentile	=	8.4E-8/rx-yr
Median	=	1.1E-6/rx-yr
95th percentile	=	1.5E-5/rx-yr

BWR Event 10

This event involves a rupture of the RHR piping inside containment. Pipe whip causes failure of a number of CRD bundle(s). The result is a large LOCA with failure to scram the reactor by crimping of the insert/withdraw lines. This was assumed to lead directly to core damage. The equation for CDF is the following:

CDF = (IE)(PIPETYPE)(TYPEFRAC)(RUPTPROB)

The equation factors are as follows:

Factor	Mean Value (events/rx-yr)	Error Factor	Lower Bound (5th percentile) (events/rx-yr)	Upper Bound (95th percentile) (events/rx-yr)	Factor Description
IE	1.0E-4	10	3.8E-6	3.8E-4	Large LOCA in BWR primary piping inside containment
PIPETYPE	1.0E-1	2 Assumed	4.6E-2	1.8E-1	Fraction of BWR primary piping inside containment that is RHR
TYPEFRAC	2.5E-1	1.5 Assumed	1.6E-1	3.6E-1	Fraction of RHR piping that can impact CRD lines by pipe whip or jet impingement
RUPTPROB	1.0	1	1.0	1.0	Probability of pipe whip or jet impingement failing CRD lines

Results of the quantification of the core damage frequency are as follows:

Mean = 2.5E-6/rx-yr

EF = 11.5

5th percentile = 7.3E-8/rx-yr

Median = 8.3E-7/rx-yr

95th percentile = 9.6E-6/rx-yr

This is a simplified analysis of CRD failure. A more comprehensive analysis was conducted as part of GSI-80 (Emrit et al., 1993).

BWR Event 12

This event involves a rupture of the RHR piping inside containment. Pipe whip causes failure of the containment metal shell. Resulting overpressure in the containment annulus between the containment shell and the containment concrete structure fails all coolant injection systems (whose piping penetrate the containment shell) required for a large LOCA response. Cooling injection failure could be caused either by displacements of the containment crimping or shearing the piping, or by steam escaping into the auxiliary areas failing the supporting systems (e.g., pump failure for EQ reasons). The equation for CDF is the following:

$$CDF = (IE)(PIPETYPE)(TYPEFRAC)(RUPTPROB_1)(RUPTPROB_2)$$

The equation factors are as follows:

Factor	Mean Value (events/rx-yr)	Error Factor	Lower Bound (5th percentile) (events/rx-yr)	Upper Bound (95th percentile) (events/rx-yr)	Factor Description
IE	1.0E-4	10	3.8E-6	3.8E-4	Large LOCA in BWR primary piping inside containment
PIPETYPE	1.0E-1	2 Assumed	4.6E-2	1.8E-1	Fraction of BWR primary piping inside containment that is RHR
TYPEFRAC	5.0E-1	2 Assumed	2.3E-1	9.2E-1	Fraction of RHR piping that can impact containment shell from pipe whip
$RUPTPROB_1$	1.0E-1	5 Assumed	1.2E-2	3.1E-1	Probability of pipe whip rupturing containment shell
$RUPTPROB_2$	8.0E-1	1.25 Assumed	6.4E-1	1.0	Probability of overpressure in containment annulus failing injection system piping penetrating containment

Results of the quantification of the core damage frequency are as follows:

Mean = 4.0E-7/rx-yr

EF = 19.8

5th percentile = 3.9E-9/rx-yr

Median = 7.7E-8/rx-yr

95th percentile = 1.5E-6/rx-yr

BWR Event 14

This event involves a high-energy line break (HELB) inside containment. Pipe whip causes failure of containment instrumentation and control. This was assumed to lead to failure of accident-mitigating injection systems and eventual core damage. The equation for CDF is the following:

CDF = (IE)(PIPETYPE)(TYPEFRAC)(RUPTPROB)

The equation factors are as follows:

Factor	Mean Value (events/rx-yr)	Error Factor	Lower Bound (5th percentile) (events/rx-yr)	Upper Bound (95th percentile) (events/rx-yr)	Factor Description
IE	1.0E-4	10	3.8E-6	3.8E-4	Large LOCA in BWR primary piping inside containment
PIPETYPE	1.0	1	1.0	1.0	All BWR primary piping inside containment is considered
TYPEFRAC	5.0E-1	2 Assumed	2.3E-1	9.2E-1	Fraction of BWR primary piping inside containment that can impact instrumentation and control cables
RUPTPROB	7.5E-1	1.33 Assumed	5.6E-1	9.8E-1	Probability of pipe whip or jet impingement failing instrumentation and control cables

Results of the quantification of the core damage frequency are as follows:

Mean = 3.8E-5/rx-yr

EF = 11.3

5th percentile = 1.1E-6/rx-yr

Median = 1.3E-5/rx-yr

95th percentile = 1.4E-4/rx-yr

This event is discussed in more detail in Section 6.3.2.

BWR Event 16

This event involves a high-energy line break (HELB) inside containment. Pipe whip causes failure of the reactor building closed cooling water (RBCCW) system. Containment systems on some BWRs have double valve isolation protection, which would make the probability of a containment-to-atmosphere leak very low. However, in some plants there may be only single valve isolation. This case was evaluated below, assuming the supply and return lines had a check and a motor-operated valve isolation, respectively. Assumed valve failure probabilities are summarized in Table 6.6. If one or both of these parallel valves should fail, it was assumed that water in the system would drain into the containment, eventually leading to a containment-to-atmosphere leak path through the system surge line vent. It was also assumed that loss of the system would cause inoperability of the RHR heat exchangers, which would lead to eventual core damage. The equation for CDF is the following:

CDF = (IE)(PIPETYPE)(TYPEFRAC)(RUPTPROB)(VALVEFAIL)

The equation factors are as follows:

Factor	Mean Value (events/rx-yr)	Error Factor	Lower Bound (5th percentile) (events/rx-yr)	Upper Bound (95th percentile) (events/rx-yr)	Factor Description
IE	1.0E-4	10	3.8E-6	3.8E-4	Large LOCA in BWR primary piping inside containment
PIPETYPE	1.0	1	1.0	1.0	All BWR primary piping inside containment is considered
TYPEFRAC	1.0E-1	2 Assumed	4.6E-2	1.8E-1	Fraction of BWR primary piping inside containment that can impact RBCCW lines
RUPTPROB	5.0E-1	2 Assumed	2.3E-1	9.2E-1	Probability that impact or inpingement will rupture RBCCW lines
VALVEFAIL	4.0E-3	3.7	7.9E-4	1.1E-2	Combined probability that check valve or motor-operated valve will fail

Results of the quantification of the core damage frequency are as follows:

Mean = 2.0E-8/rx-yr

EF = 16.8

5th percentile = 2.7E-10/rx-yr

Median = 4.6E-9/rx-yr

95th percentile = 7.7E-8/rx-yr

This event is discussed in more detail in Section 6.3.4.

PWR Event 9

This event involves an HELB (MS, FW, or primary coolant system) inside containment. Pipe whip or jet impingement causes failure of containment instrumentation and control, leading to failure of accident-mitigating systems. The equation for CDF is the following:

CDF = (IE)(PIPETYPE)(TYPEFRAC)(RUPTPROB)

The equation factors are as follows:

Factor	Mean Value (events/rx-yr)	Error Factor	Lower Bound (5th percentile) (events/rx-yr)	Upper Bound (95th percentile) (events/rx-yr)	Factor Description
IE	1.5E-3[a]	10	5.6E-5	5.6E-3	HELB (RCS, MS, or FW) inside containment
PIPETYPE	1.0	1	1.0	1.0	All RCS, MS and FW piping is considered
TYPEFRAC	1.0E-1	2 Assumed	4.6E-2	1.8E-1	Fraction of RCS, MS, or FW piping that can impact containment instrumentation and control cables from pipe whip or jet impingement
RUPTPROB	5.0E-1	2 Assumed	2.3E-1	9.2E-1	Probability of pipe whip or jet impingement failing instrumentation and control cables

Results of the quantification of the core damage frequency are as follows:

Mean = 7.5E-5/rx-yr

EF = 12.2

5th percentile = 1.9E-6/rx-yr

Median = 2.4E-5/rx-yr

95th percentile = 2.9E-4/rx-yr

This event is discussed in more detail in Section 6.3.3.

a. This is the sum of the RCS small LOCA, MS rupture, and FW rupture frequencies. The entire large LOCA frequency (5E-4/rx-yr) was used for the main steam and feedwater rupture. The large LOCA probability was not included because of leak-before-break.

PWR Event 16

This event involves a rupture of the MS or FW piping inside containment. Pipe whip causes failure of the containment metal shell. Additional random system failures (in I&C and ECCS systems) occur and result in core damage. The equation for CDF is the following:

$$CDF = [(IE_{FW})(TYPEFRAC_{FW})(SYSTFAIL_{FW}) + (IE_{MS})(TYPEFRAC_{MS})(SYSTFAIL_{MS})](RUPTPROB)$$

The equation factors are as follows:

Factor	Mean Value (events/rx-yr)	Error Factor	Lower Bound (5th percentile) (events/rx-yr)	Upper Bound (95th percentile) (events/rx-yr)	Factor Description
IE_{FW}	4.0E-4	10	1.5E-5	1.5E-3	FW piping rupture inside containment
IE_{MS}	1.0E-4	10	3.8E-6	3.8E-4	MS piping rupture inside containment
$TYPEFRAC_{FW}$	1.0E-1	2 Assumed	4.6E-2	1.8E-1	Fraction of FW piping that can impact containment shell from pipe whip
$TYPEFRAC_{MS}$	1.0E-1	2 Assumed	4.6E-2	1.8E-1	Fraction of MS piping that can impact containment shell from pipe whip
$SYSTFAIL_{FW}$	4.8E-5	5 Assumed	6.0E-6	1.5E-4	Probability of additional system failures given FW rupture initiator
$SYSTFAIL_{MS}$	9.8E-5	5 Assumed	1.2E-5	3.0E-4	Probability of additional system failures given MS rupture initiator
RUPTPROB	5.0E-1	2 Assumed	2.3E-1	9.2E-1	Probability of pipe whip rupturing containment shell

Results of the quantification of the core damage frequency are as follows:

Mean = 1.4E-9/rx-yr

EF = 15.0

5th percentile = 2.0E-11/rx-yr

Median = 3.7E-10/rx-yr

95th percentile = 5.6E-9/rx-yr

PWR Event 17

This event involves a main steam or feedwater line (HELB) inside containment (Primary system LOCAs are excluded because of leak-before-break). Pipe whip causes failure of the component cooling water (CCW) system. Containment systems on some PWRs have double valve isolation protection, which would make the probability of a containment-to-atmosphere leak very low. However, in some plants there may be only single valve isolation. This case was evaluated below, assuming the supply and return lines had a check and a motor-operated valve isolation, respectively. Assumed valve failure probabilities are summarized in Table 6.6. If one or both of these parallel valves should fail, it was assumed that water in the system would drain into the containment, eventually leading to a containment-to-atmosphere leak path through the system surge line vent. It was also assumed that loss of the system would cause inoperability of the RHR heat exchangers, which would lead to eventual core damage. The equation for CDF is the following:

CDF = (IE)(PIPETYPE)(TYPEFRAC)(RUPTPROB)(VALVEFAIL)

The equation factors are as follows:

Factor	Mean Value (events/rx-yr)	Error Factor	Lower Bound (5th percentile) (events/rx-yr)	Upper Bound (95th percentile) (events/rx-yr)	Factor Description
IE	5.0E-4	10	3.8E-6	3.8E-4	Large LOCA in PWR mean steam or feedwater piping inside containment
PIPETYPE	1.0	1	1.0	1.0	All main steam and feedwater piping inside containment is considered
TYPEFRAC	1.0E-1	2 Assumed	4.6E-2	1.8E-1	Fraction of PWR primary piping inside containment that can impact CCW lines
RUPTPROB	5.0E-01	2 Assumed	2.3E-1	9.2E-1	Probability that impact or inpingement will rupture RBCCW lines
VALVEFAIL	4.0E-03	3.7	7.9E-4	1.1E-2	Combined probability that check valve or motor-operated valve will fail

Results of the quantification of the core damage frequency are as follows:

Mean = 1.0E-7/rx-yr

EF = 16.8

5th percentile = 1.4E-9/rx-yr

Median = 2.3E-8/rx-yr

95th percentile = 3.9E-7/rx-yr

This event is discussed in more detail in Section 6.3.3.

6.3 Additional System Considerations

After the initial rankings, additional evaluations were conducted on several systems:

1. CRD lines (BWR events 5 and 10). BWR event 5 is the subject of GSI-80.

2. PWR and BWR containment instrument and control systems. The changes in CDF as a result of failure from a pipe break were ranked high for both BWRs and PWRs.

3. PWR CCW and BWR RBCCW systems. These systems were identified by NRC/NRR as possible concerns after the initial investigation.

The results are summarized below.

6.3.1 CRD Lines

The effect of pipe breaks on boiling water reactor (BWR) control rod drive (CRD) lines was posed as a concern by the Advisory Committee on Reactor Safeguards (ACRS) in 1982–83. Based on ACRS concerns with MARK I and II containments, the NRC designated this investigation as Generic Safety Issue-80 (GSI-80) (Emrit et al., 1993).

This issue is similar to BWR Event 5. All of the BWR plants within the scope of GSI 156-6.1 are of the MARK I containment variety, whereas GSI-80 is concerned with both MARK I and MARK II containments. Thus the two issues are not identical in scope, but overlap.

6.3.2 I&C Systems

6.3.2.1 Introduction. Forty-one older nuclear plant units referred to as the Systematic Evaluation Program Phase III (SEP-III) plants received construction permits prior to the time when documented acceptance criteria was established regarding the effects of pipe break inside containment. Construction permit dates for these plants range from April 12, 1965, (Nine Mile Point 1) to February 8, 1971 (Trojan). Although the NRC reviewed these plants, there is a potential lack of uniformity in those reviews due to the absence of documented acceptance criteria.

This section documents a study that was performed to support NRC's assessment of the impact of not having those criteria in place. The study addresses safety-related electrical and instrumentation and controls (I&C) circuits within the containment that must function either during a postulated high energy line beak (HELB), after the break, or both. The primary issue, for this study, is the whether the circuits are designed to be adequately protected against the effects of missiles, pipe whip, and discharging fluids. Two primary methods employed to protect electrical circuits are to separate redundant circuits with either diverse routes or by providing physical barriers such that a single event would not impact all redundant circuits for a function that must remain operable. A third alternate, not pursed by this study, is for a plant to show that the probability for a fluid system rupture to affect unprotected circuits is extremely low.

This study examines the regulatory environment and requirements for these plants, identifies representative functions that are required to remain operable during and subsequent to an HELB, and presents a cursory review of two PWR and two BWR plants from the list of 41 SEP-III plants. Information presented in UFSARs for the selected plants was used as the basis for the plant specific reviews. The selected PWRs are H. B. Robinson, Unit 2 and Turkey Point, Units 3&4. Construction permits for these plants were issued April 13, 1967, and April 27, 1967, respectively. The selected BWRs are Dresden, Unit 2 and Pilgrim. Construction permits for these plants were issued January 10, 1966 and August 26, 1968, respectively. These plants were selected based upon being some of the oldest of the SEP-III plants and on the availability of UFSAR information.

6.3.2.2 Regulatory Requirements for SEP-III Plants. Development of regulatory requirements and guidance for dynamic effects of HELBs within the containment was in its

infancy when the SEP-III plants received their construction permits. A proposed general design criteria (GDC) was published in the Federal Register July 11, 1967. The proposed GDC served as interim guidance until the GDC were finalized July 7, 1971. The Institute of Electrical and Electronics Engineers issued IEEE 279, "Criteria for Protection Systems for Nuclear Power Generating Stations," in 1968 and revised it in 1971, but it was not required until 10CFR50.55a was published June 12, 1971. However 10CFR50.55a did not require adherence to IEEE 279 for plants with construction permits prior to January 1, 1971. As development of regulatory requirements and guidance matured, internal guidance was issued in the form of a November 9, 1972, Rodgers letter, "Safety Guides," that proposed a Draft Safety Guide, "Protection Against Pipe Whip Inside Containment." This Draft Safety Guide was subsequently issued in May 1973, as RG 1.46. This RG was withdrawn in 1985 after revision of Standard Review Plan (SRP) 3.6.2, "Determination of Rupture Locations and Dynamic Effects Associated with the Postulated Rupture of Piping," provided more current information concerning these matters. In addition, RG 1.53, "Application of the Single-Failure Criterion to Nuclear Power Plant Protection Systems," was issued in June 1973, (it endorsed IEEE 379-1972); and RG 1.75, "Physical Independence of Electrical Systems," was issued in February 1974, (it contained an appendix that later became IEEE 384-1974).

The above discussion shows that the only formal requirements regarding HELB effects within containment for the SEP-III plants are the interim GDC and possibly IEEE 279-1968. One SEP-III plant, Trojan, was issued a construction permit February 8, 1971, and could have been required to adhere to IEEE 279-1971. However Trojan has shut down and is no longer an operating nuclear plant. UFSARs for the selected plants show results that are consistent with the above conclusion. Three of the four plants compare their designs to the proposed GDC of July 11, 1967, and three of the four indicate they are designed to comply with IEEE 279-1968 or the intent of IEEE 279-1968. None of these plants claim to comply with the final GDC or later versions of IEEE 279.

The proposed GDC issued July 11, 1967, did not contain all the requirements pertaining to the dynamic effects of HELB that are contained in the final GDC. Proposed Criterion 20, "Protection Systems Redundancy and Independence," required that redundancy and independence be designed in protection systems such that no single failure or removal from service of any component or channel will result in loss of the protection function. Criterion 21 states that multiple failures resulting from a single event shall be treated as a single failure. Criterion 23, "Protection Against Multiple Disability for Protection Systems," requires that effects of adverse conditions to which redundant channels or protection system might be exposed in common shall not result in loss of the protection function. Accident conditions are specifically included in this requirement. And Criterion 40, "Missile Protection," requires protection of engineered safety features from missiles and dynamic effects that might result from plant equipment failures. While these criteria would apply to pipe whip and the effects of discharging fluids, they are not specifically mentioned. Current GDC 4 was added after publication of the proposed GDC. GDC 4, "Environmental and Dynamic Effects Design Bases," requires, among other things, that structures, systems and components important to safety be appropriately protected against dynamic effects, including the effects of missiles, pipe whipping, and discharging fluids that may result from equipment failures.

Since the effects of pipe whip and fluid discharge were not specifically included in the proposed GDC that was in effect when the SEP-III plants received their construction permits, and additional regulatory guidance had not yet been developed, compliance with the requirements was subject to interpretation that varied from plant to plant.

The result of this inconsistency in interpretation by both the plant designers and the regulators is 41 plants with varying degrees or methods of compliance with requirements that could

be applied to pipe whip and fluid discharge resulting from an HELB. This will be discussed in more detail in a later section.

6.3.2.3 Functions Required to be Operable During and After an HELB Within Containment. Identification of electrical circuits within the containment that are required to be functional throughout an HELB depends upon specific plant design and which systems the FSAR assumes are available for accident mitigation. However, for PWRs there are some electrical circuits, with the exception of those specifically required by RG 1.97, that are generally required. Measurements specifically required by RG 1.97 have been installed and reviewed by the NRC in recent times and sufficient guidance existed to assure that installations met independence, single failure, and physical separation requirements. Those PWR in-containment circuits that are generally required are:

- Neutron flux detectors
- Reactor coolant temperature (cold and hot leg)
- Pressurizer pressure
- Pressurizer level
- Steam generator levels
- Containment temperature
- Containment cooling and filtering
  - I&C
  - Fan motors
- Containment isolation valves
  - Actuation
  - Valve position indication
- Containment sump pump
- Containment sump pump level

In addition, some parameters such as steam generator pressure and containment pressure are needed during LOCA events but the transmitters are located outside containment. Sensing lines that exit the containment through penetration assemblies connect the transmitters to the parameter being measured. These sensing lines need to be designed to provide adequate protection and separation for missiles, pipe whip, and fluid discharge.

The situation with BWRs is different than for PWRs. The design of older BWRs, such as Dresden, Unit 2 and Pilgrim, minimizes the number of sensors and transmitters inside the primary containment (drywell) by routing sensing lines from within the drywell to transmitters located inside the secondary containment. This is particularly true for measurements of pressure, flow, and level. The only I&C and electrical circuits located inside the drywell that are necessary for mitigating accidents such as HELB are for sensors that must be located at the process, I&C for critical valves such as isolation valves, and power for actuating motor operated isolation valves. As with PWRs, the list of functions required for mitigating an HELB inside primary containment depends upon the plant-specific design and analysis; however, the following list is generally applicable for electrical and I&C circuits:

- Neutron flux detectors
- Containment isolation valves (20 or more lines)
  - Actuation
  - Valve position indication
- Drywell Radiation
- Reactor vessel temperature
- Automatic depressurization system (ADS) valve actuation

Sense lines that must be adequately protected against missiles, pipe whip, and fluid discharge include:

- Reactor vessel pressure
- Reactor vessel water level
- Drywell pressure

6.3.2.4 Plant Design Considerations. A cursory review of two PWR and two BWR plants from the list of 41 SEP-III plants was performed to determine how the plants were designed to protect against missiles, pipe whip, and fluid discharge as a result of HELBs inside the primary containment. Information presented in UFSARs for the selected plants was used as the basis for the plant specific reviews. The selected PWRs are H. B. Robinson, Unit 2 and Turkey Point, Units 3&4. Construction permits for these plants were issued April 13, 1967, and April 27, 1967, respectively. The selected BWRs are Dresden, Unit 2 and Pilgrim. Construction permits for these plants were issued January 10, 1966, and August 26, 1968, respectively. These plants were selected based upon being some of the oldest of the SEP-III plants and on the availability of UFSAR information. A discussion of each plant is presented below followed by a summarization of the four plants. The level of detail that is presented in the various UFSARs related to protecting electrical and I&C functions against the effects of HELBs within containment varies considerably among the four plants that were reviewed. This is reflected in the information presented in following discussions.

Dresden, Unit 2: Dresden, Unit 2 is a 794 MWe BWR located in a MK-I containment and received its construction permit January 10, 1966. A review of chapters 7 and 8 of the UFSAR shows the following design considerations:

The UFSAR indicates that the design is in general compliance with IEEE 279-1968 for single failure and separation requirements but no indication that the design is in compliance with the proposed GDC of July 11,1967.

The UFSAR states that the single failure criterion of IEEE 279-1968 is not directly applicable to ADS and HPCI because HPCI and ADS are diverse functional backups to each other as far as depressurization is concerned. However, there is some consideration for compliance with single failure criteria, separation requirements, and channel independence for electrical and I&C inside primary containment. The following statements indicate this:

- Cables through drywell penetrations are grouped such that failure of all cables in a single penetration cannot prevent a scram.
- Routing of cables is such that damage to any single cable tray cannot disable the protective function.
- Sensors are arranged so that no single failure or process sensing line failure in any mode can disable the scram function.
- The four subchannels of each protective function are electrically isolated and physically separated.
- Electrical isolation and mechanical separation provide independence of the sensors for each variable in the core spray, HPCI, and ADS systems.
- Sensors for channels A and C have a common process tap, which is widely separated from the corresponding tap for sensors in channels B and D.
- Cable penetrations are located in the four geographical quadrants of the drywell. ESF systems and the Primary Containment Isolation System (PCIS) are divided so that one division is in penetrations in one quadrant and the other division is in penetrations in a different quadrant.
- Division I and Division II cable/tubing trays follow different, physically separated routes. Where they are in close proximity, consideration is given to whether external potential sources of fire or missiles are present.

The design of the Dresden, Unit 2 drywell includes four widely separated penetration assemblies and the design philosophy provides for independent routing of redundant cables and sensing lines inside the drywell. This indicates that the design has the potential to protect safety-related functions against the effects of missiles, pipe whip, and fluid discharge resulting from a HELB within the primary containment. However, electrical cable and sensing line routing is not shown on any of the drawings, and pipe whip is not specifically discussed. Therefore, is not possible to judge how well the actual design protects against missiles, pipe whip, and fluid discharge resulting from a HELB.

Pilgrim: Pilgrim is a 670 MWe BWR reactor located in a MK-I containment and received its construction permit August 26, 1968. A review of chapters 7 and 8 of the UFSAR shows the following design considerations:

The UFSAR indicates that the RPS is designed to comply with the intent of IEEE-279 and the proposed GDC. The following information is presented in the UFSAR to support the conclusion that the plant design complies with the intent of IEEE-279 and the proposed GDC.

- Circuitry involving common devices in the RPS has been designed to assure that no single failure (short, open, or ground) can disable a safeguards function.

- Nuclear system pressure and reactor vessel water level are tapped from the reactor vessel at two separate locations. A pipe from each tap is routed outside the primary containment to a pair of transmitters. The two pairs of transmitters are physically separated. The physical separation and the signal arrangement assure that no single physical event can prevent the required safety function.

- Channels are physically and electrically separated to assure that a single physical event cannot prevent isolation.

- The physical events that accompany a loss-of-coolant accident (LOCA) shall not interfere with the ability of the core standby cooling system (CSCS) controls and instrumentation to function properly.

- The two core spray loops are physically and electrically separated so that no single physical event makes both loops inoperable.

- ADS is arranged so that a single failure will not prevent or impair the operation of essential station safety functions.

- Space, fire barriers, or concrete walls and floors are used to assure maximum physical separation and independence for cables and components of redundant circuits.

- For engineered safeguards systems, redundant cables are separated by either a fire boundary having a 3-hour fire rating, or horizontal separation of 20 ft (6.1-m), or enclosure of one train of redundant cables and associated circuits by a 1-hour rated fire barrier.

- Drywell electrical penetrations are physically grouped at four locations separated at approximately right angles around the drywell.

- Spatial separation and the natural protection afforded by the biological shield are used to preserve the independence of redundant sensors and sensing lines.

In addition to the design descriptions the following criteria have been applied to the design of the plant:

- The arrangement of components or the use of protective barriers are such that no locally generated missile can prevent independent safety system components from performing their design safety function. This criterion is applied to provide physical separation and protection against concurrent failure of safety systems sensors, sensing lines, process lines,

and electrical cables required to initiate and control a system to meet its design safety function during single events of mechanical damage (missile). However, missiles are limited to valve stems and thermowells.

- Cables, control mechanisms, and valve operators of isolation valves inside the drywell are required to be functional in a LOCA environment.

The design of the Pilgrim drywell includes four widely separated penetration assemblies and the design philosophy provides for independent routing of redundant cables and sensing lines inside the drywell. This indicates that the design has the potential to protect safety-related functions against the effects of missiles, pipe whip, and fluid discharge resulting from a HELB within the primary containment. However, electrical penetrations and the cable and sensing line routing is not shown on any of the drawings and pipe whip is not specifically discussed. Therefore, is not possible to judge how well the actual design protects against missiles, pipe whip, and fluid discharge resulting from a HELB.

H. B. Robinson: H. B Robinson is a 665 MWe 3-loop PWR reactor supplied by Westinghouse that received its construction permit April 13, 1967. A review of the UFSAR shows the following design considerations:

The UFSAR evaluates the plant with respect to the proposed GDC published July 11, 1968, and the proposed IEEE 279-1968. The following information is provided to support the evaluation:

- Regarding protection systems redundancy and independence (GDC 20): the RPS and I&C are designed to meet all presently defined RPS criteria in accordance with the proposed IEEE 279-1968

- Regarding protection against multiple disability for protection systems (GDC 23):

  - The components of the protection system are designed and laid out so that the mechanical and thermal environment accompanying any emergency situation does not interfere with a required function.

  - The physical arrangement of all elements associated with a system reduces the probability of a single physical event impairing the vital functions of the system.

  - Isolation of the redundant analog channels originates at the process sensors and continues along the field wiring and through containment penetrations to the analog racks. Physical separation is used to the maximum practical extent to achieve isolation of redundant transmitters. Isolation of field wiring is achieved using separate wireways, cable trays, conduit runs, and containment penetrations for each redundant channel.

- Protection against dynamic effects associated with the postulated rupture of piping deals with pipe restraints, structures, containment integrity, size of pipes, equipment supports, etc. It does not address protection of redundant electrical and I&C channels from effects such as pipe whip. The UFSAR focuses more on trying to show that it will not happen.

- A jet impingement shield has been installed to protect the steam system pressure transducers from a postulated crack in the feedwater line.

- The protective systems are redundant and independent for all vital inputs and functions. Each channel is functionally independent of every other channel and receives power from two independent sources.

- Cables from different RPS, NIS, and ESF channels are never routed through the

same penetration. RPS penetrations are separated by a minimum center-to-center distance of three feet, NIS penetrations are separated by a minimum center-to-center distance of six feet (0.9-m), and ESF channels are separated by a horizontal distance of approximately 14-ft (4.3-m). Additional separation is provided by placing one complete channel consisting of penetrations on one side of a concrete wall separating the electrical penetrations into two groups. However, the drawings show a wall only on the outside of containment.

- When safety-related circuits have been modified, new wiring and components have been installed so that, as a minimum, the separation requirements of RG 1.75 are met.

The design philosophy for H. B. Robinson provides for separation of redundant circuits to minimize vulnerability to the effects of missiles, pipe whip, and fluid discharge resulting from a HELB. However the drawings show only one containment penetration area with no cable routing details being provided. The UFSAR describes a concrete wall which separates one complete redundant channel from the other channels for each in-containment safety related function. However, the drawings in the UFSAR show a wall at the outside of containment but not on the inside. Therefore the potential exists for redundant channels to be routed near each other inside containment and be susceptible to the effects of a single HELB.

Turkey Point, Units 3&4: Turkey Point, Units 3&4 are 728 MWe 3-loop PWR reactors supplied by Westinghouse that received their construction permits April 27, 1967. A review of the UFSAR shows the following design considerations:

- Channel independence (GDC 20) is carried throughout the system extending from the sensor to the relay actuating the protective function.
- Regarding protection against multiple disability for protection systems (GDC 23):
  - Separation of redundant analog protection and ESF channels originates at the process sensors and continues through the field wiring and containment penetrations to the analog racks.
  - Physical separation is used to maximum practical extent to achieve separation of redundant transmitters.
  - Separation of field wiring is achieved using separate wireways, cable trays, conduit runs and containment penetrations for each channel.
- Some design considerations for Missile Protection (GDC 40) are:
  - The primary missile protection is through prevention of missiles rather than missile shielding.
  - Protection is also provided by layout of equipment or by missile barriers.
  - Dynamic effects of postulated primary loop pipe ruptures have been eliminated from the Turkey Point design basis based on the resolution of GL 84-04.
  - Redundancy and segregation of instrumentation and components are incorporated to assure that postulated malfunctions will not impair the ability of the system to meet the design objectives for GDC 44.
- There are two penetration enclosures for each containment that are approximately 60 degrees apart, thus providing many feet of separation.

- One penetration enclosure cares for the train "A" circuits and the other handles redundant train "B".
- No more than two protection channels go through a given penetration enclosure.
- The two channels passing through a penetration enclosure are widely separated vertically and horizontally.

The design of Turkey Point, Units 3&4 provides for considerable separation of redundant electrical and I&C circuit inside containment. Drawings show two penetration assemblies being about 60 degrees apart with redundant cable runs travelling along widely separated routes, for the most part. There are segments of circuits where the cable runs are in the same vicinity. Whereas there may not be pipe whip problems in those areas, this is not stated.

6.3.2.5 Summary. Forty-one older nuclear plant units referred to as the Systematic Evaluation Program Phase III (SEP-III) plants received construction permits prior to the time when documented acceptance criteria were established regarding the effects of pipe break inside containment. The only published criteria were proposed general design criteria (GDC) that were published in the Federal Register July 11, 1967. The proposed GDC served as interim guidance until the GDC were finalized July 7, 1971. While an interpretation of the GDC could require designs that protect against the effects of missiles, pipe whip, and fluid discharge from HELBs, pipe whip is not specifically mentioned and guidance to provide for uniform application of the GDC was not issued until 1971, or later. Although the NRC reviewed these plants, there is a potential lack of uniformity in those reviews due to the absence of documented acceptance criteria.

The UFSARs of four SEP-III plants, two PWRs and two BWRs, were reviewed to assess the plant designs with regard to providing adequate protection against the effects of missiles, pipe whip, and fluid discharge resulting from HELBs inside the primary containment. These plants were selected based upon being some of the oldest of the SEP-III plants and on the availability of UFSAR information.

There are considerable differences in the plant designs related to protection against the effects of missiles, pipe whip, and fluid discharge resulting from HELBs inside the primary containment. The two BWR plants have four penetrations, one in each quadrant, that provide the capability for adequate physical separation of redundant channels of safety-related functions. One PWR facility, Turkey Point, Units 3&4 has two containment penetrations separated by approximately 60 degrees and the other PWR, H. B Robinson has only one penetration area with a concrete wall separating redundant channels from the other channels. Because the drawings show a wall only on the outside of containment, it is not clear that a wall provides separation for the in-containment portion of the channels. Only one plant, Turkey Point, Units 3&4 indicated channel routings on drawings included in the UFSAR. These drawing showed that some segments of the channels have minimal separation. However, it is not clear that these segments are vulnerable to the dynamic effects of a HELB.

It is concluded, therefore, that the variety and significance of the SEP-III plant design differences precludes reaching a general statement regarding the adequacy of protection against the effects of missiles, pipe whip, and fluid discharge resulting from HELBs inside the primary containment. While some plant designs provide the basic capability to provide adequate protection, plant specific designs must be reviewed in greater detail than that found in the UFSARs to determine whether there is adequate protection against the effects of missiles, pipe whip, and fluid discharge resulting from HELBs inside the primary containment.

6.3.3 CCW System

6.3.3.1 Introduction. This section describes the normal operation and post-accident functional requirements of Component Cooling Water (CCW) systems, and the effects of CCW pipe breaks inside containment. Although the basic functions of CCW are the same for various

designs of PWRs, there are significant differences in design, classification, and the system licensing bases from one facility to the next. For example, some multi-unit facilities operate with a "shared" CCW system that can be divided into separate trains for each unit in the event of an abnormal or emergency condition, with a redundant trains capable of supplying cooling water to either unit. Other system designs provide a separate, dedicated CCW system for each unit, each system with redundant safety-related trains.

Newer plant designs meet 10CFR50, Appendix A, General Design Criteria (GDC) and NUREG-0800 (Standard Review Plan) requirements for containment isolation, cooling water system design, and classification (safety, quality, and ASME Code). However, most older plants were designed and licensed based on the designer's "interpretation of the intent" of the draft GDC published in 1967, and may not be licensed to meet all 10CFR50, Appendix A, GDC or NUREG-0800 requirements. Two major differences between the draft GDC of 1967 and the final GDC published in 10CFR50 in 1976 are in the requirements for primary containment isolation and cooling water systems.

GDC 54 requires that piping systems penetrating containment be provided with redundant and reliable isolation and containment capabilities. GDC 57 requires that lines penetrating primary containment that are neither connected to the reactor coolant pressure boundary nor connected directly to the containment atmosphere be provided with at least one locked-closed, remote-manual, or automatic-isolation valve outside containment (a simple check valve cannot be used in this application). Although GDC 57 allows the use of only one containment isolation valve for each CCW line penetrating containment, redundant barriers are required. Per NUREG-0800, Section 6.2.4, paragraph II.1.o, the use of a closed system inside containment as an isolation barrier is acceptable provided it satisfies the following requirements:

- The system does not communicate with either the RCS or the containment atmosphere
- The system is protected against missiles and pipe whip
- The system is designated Seismic Category I
- The system is classified Safety Class 2 (equivalent to ASME Code, Class 2)
- The system is designed to withstand temperatures at least equivalent to containment design temperature
- The system is designed to withstand the external pressure from the containment structure acceptance test
- The system is designed to withstand a LOCA transient and environment

In lieu of the isolation capability requirements of GDC 54 and 57 for CCW systems, some older plants credit the use of one containment isolation valve located outside containment combined with a closed system outside containment to provide redundant isolation barriers. While NUREG-0800, Section 6.2.4, does not discuss the acceptability of this scenario for closed loop cooling water systems, closed systems outside containment are discussed in paragraph II.6.e as a possibly acceptable alternative for compliance with the double containment isolation valve requirements of GDC 55 and 56. (GDC 55 and 56 apply to lines penetrating containment that are either part of the reactor coolant pressure boundary or connect directly to containment atmosphere, i.e., ECCS or containment atmosphere control systems.) This paragraph states that a single isolation valve will be acceptable if it can be shown that system reliability is greater with only one isolation valve in the line, the system is closed outside containment, and a single failure can be accommodated with only one isolation valve in the line. The closed system outside containment should be protected from missiles, designed to Seismic Category I standards,

classified Safety Class 2, and should have a design temperature and pressure rating at least equal to that of the containment.

GDC 44 and NUREG-0800, Section 9.2.2, for auxiliary cooling water systems, require (among many other things) that CCW systems have sufficient redundancy so that system safety functions can be performed assuming a single active component failure coincident with the loss of off-site power, and the capability to isolate components, systems and piping as necessary so that system safety function will not be compromised.

For purposes of comparison, the typical functions for normal and post-accident CCW system operation are outlined below for typical later vintage Westinghouse PWRs, followed by specific differences noted at a SEP-III plant. The selected SEP-III plant used for comparison is the Point Beach Nuclear Plant, Units 1 and 2, which is an older two-loop Westinghouse PWR design. A simplified schematic of a typical PWR plant CCW system is shown in Figure 6-1. Although the "typical" CCW system design and the specific design differences of the SEP-III PWR are noted in this report, the specific current licensing bases for each SEP-III facility were not researched in detail.

6.3.3.2 Normal System Operation. The primary operational function of a CCW system is to transfer heat from various equipment to the service water system (SWS) during the course of normal plant operations. CCW is a closed loop cooling system which provides an interface between equipment coolers and plant heat exchangers and the environment. Raw service water often presents corrosion problems (due to salt water) or erosion and valve seating problems (due silt and debris). These problems are minimized by use of an intermediate demineralized water cooling system (CCW). Additionally, an intermediate closed loop cooling system lessens the likelihood of release of radioactive contamination to the environment. The majority of the coolers and heat exchangers served by CCW have radioactive fluid on the primary side.

The CCW system provides cooling to components both inside and outside primary containment. The CCW system (or portions of the system) that perform cooling functions important to safety for emergency core cooling, post-accident containment heat removal, reactor shutdown, residual heat removal and spent fuel cooling are classified and qualified Seismic Category I, safety-related, ASME Class 3 (Quality Group C). However, portions of the system penetrating primary containment would be ASME Class 2 (Quality Group B). Some designs segregate cooling loads to vital and non-vital headers. Vital components are those that are required to bring the plant to safe shutdown or to mitigate the consequences of accidents and are supplied from redundant trains of CCW. Typical vital cooling loads may include:

- Residual heat removal heat exchangers
- RHR/LPSI and HPSI pump and seal coolers
- Letdown heat exchanger
- Reactor coolant pump (RCP) seal water heat exchangers
- Reactor containment fan coolers
- Containment penetration coolers (some containment designs do have penetration cooling)
- Spent fuel pool cooling heat exchangers (may be vital or non-vital depending on licensing basis)
- Centrifugal charging pump coolers

The non-vital components may not be required to meet the above classification and qualification requirements provided adequate isolation capability exists. Typical non-vital cooling loads include:

- Excess letdown heat exchanger
- Reactor coolant drain tank heat exchanger

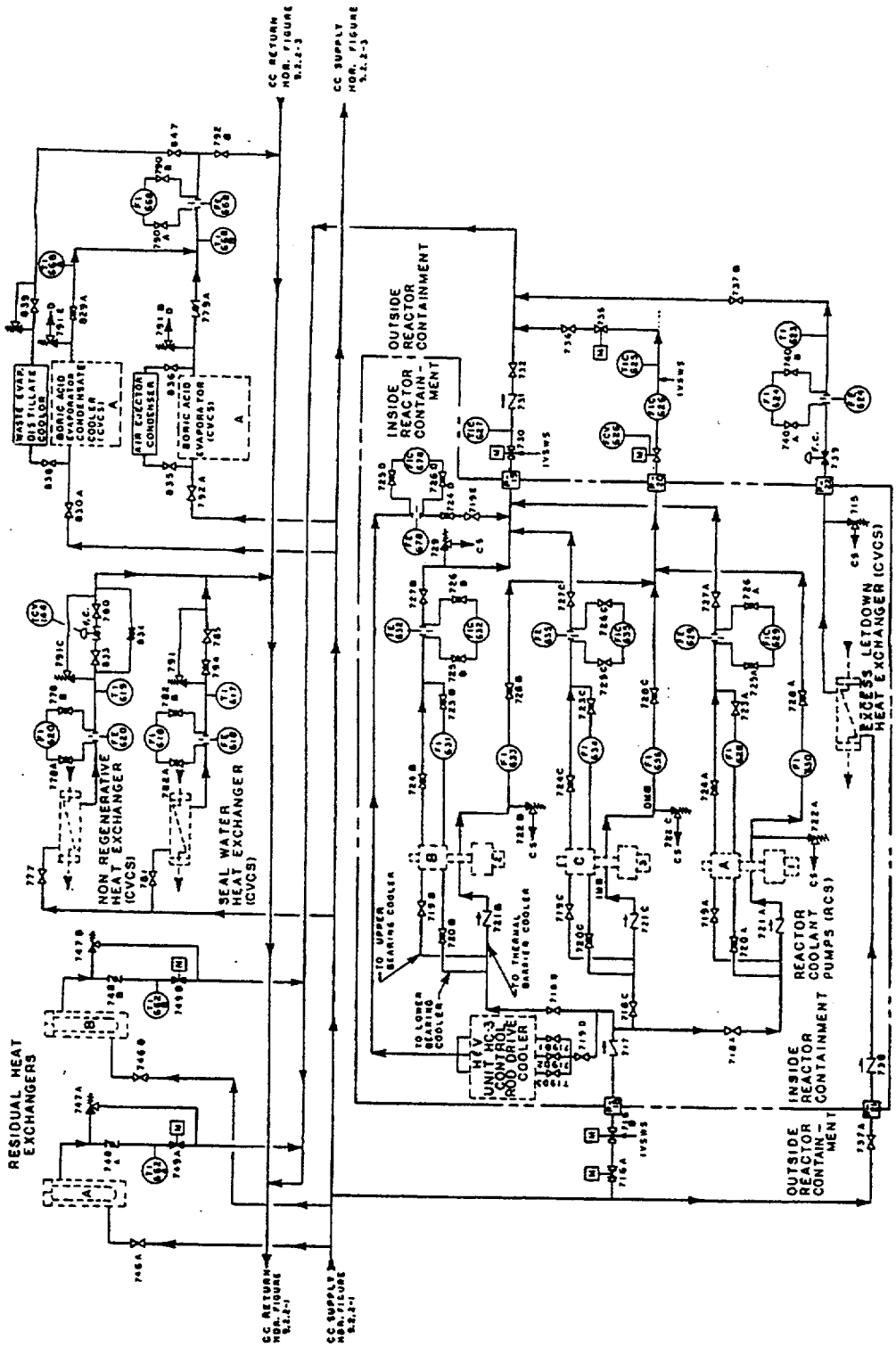

Figure 6-1. CCW system.

- Liquid waste evaporators and waste gas compressors
- Primary sample heat exchangers
- Boron recycle system components
- Positive displacement charging pump coolers
- RCP motor, bearing, and thermal barrier coolers
- Spent fuel pool cooling heat exchangers (may be vital or non-vital depending on licensing basis)

Surge tanks provide a means of chemical addition, provide surge volume in the event of system temperature changes, and provide inventory in the event of small system leaks. Heat from CCW cooling loads is discharged to the service water system via the CCW heat exchangers.

6.3.3.3 Post-Accident/HELB

Functional Requirements. The design basis for CCW systems is to provide cooling water as required for normal operation and as necessary under all transient and accident situations. For dual unit systems, the design is adequate to mitigate the consequences of a design basis LOCA in one unit coincident with safe shutdown of the other unit.

Alarms in the main control room are provided to indicate low flow, low pressure, high/low surge tank level, high temperature, and high radiation level (indicating in-leakage to the CCW system). System low pressure results in auto-start of the redundant pump.

The CCW system is designed to be capable of performing its required functions given an active or passive failure. Makeup may be provided from the demineralized water and/or primary makeup water systems, but may require manual initiation. Surge tanks are not sized to accommodate large leaks or system pipe breaks. However, all vital components in each unit are supplied by redundant trains of CCW. Redundant trains are equipped with separate surge tanks or a single surge tank separated into two halves by baffles that prevent a leak or rupture in one train from disabling both trains.

In the event of a LOCA, all CCW pumps are placed into service and vital loops, if cross-connected, are separated (requires operator action). A high-high primary containment pressure (containment isolation signal) automatically isolates the non-vital cooling loads inside containment. CCW to the reactor coolant pumps (RCPs), RCP thermal barriers, and the excess letdown heat exchanger are non-vital and may not be protected from missiles, but are not required for post-accident cooling. The excess flow heat exchanger and the RCP coolers are necessary for normal plant operation but are not required to mitigate the consequences of an accident or to bring the plant to the safe shutdown condition. However, CCW systems are designed such that a passive failure of these non-vital CCW components inside containment would not result in the loss of vital component cooling. The CCW vital supply and return lines penetrating containment (to the containment fan coolers) are equipped with containment isolation valves (CIVs). These CIVs are typically remote manual motor-operated valves (MOVs) that do not receive an automatic containment isolation closure signal. However, the vital CCW piping and components inside containment are protected from missiles (piping and components are located behind the missile barrier).

Loss of CCW to the RCP thermal barrier contributes to RCP seal failure (seal injection provides some cooling to the seals; seal injection comes from the CVCS and the RCP seal injection coolers are cooled by CCW). However, this is not typically considered a safety-related function, especially if the loss of coolant due to seal failure is within the capacity of normal makeup (see the exclusion criteria of 10CFR50.55a(c)(2), also NUREGs-0718 and -0737). The CCW system is designed such that any leakage would be within the primary containment. In the event of a failure of the thermal barrier cooler, a check valve in the thermal barrier cooling supply line and an automatically operated power operated valve in

the return line are designed to provide isolation. In the event of significant in-leakage from the thermal barrier, high flow would be sensed in the CCW return line resulting in auto closure of the return line isolation valve inside containment. All CCW piping and components between the thermal barrier cooling supply check valve and the return isolation valve are designed for full RCS pressure and temperature. In the event that the automatic valve failed to close, leakage would be detected by high CCW radiation levels and rising surge tank level (both annunciated in the control room). The redundant CCW return line outboard isolation valve would then provide a means of leak isolation.

Since the older CCW systems designs typically do not have a safety-related makeup source and the system surge tank is not sized to accommodate a significant loss of fluid, a CCW pipe break inside containment would likely result in the loss of CCW function if the break inside containment is not rapidly isolated. This would cause a loss of cooling to numerous components required for accident mitigation and safe shutdown of the reactor.

6.3.3.4 Significant Differences Between Point Beach Nuclear Plant and Newer Plant CCW Systems. Point Beach Nuclear Plant, Units 1 and 2, were selected for comparison from the list of SEP-III plants to illustrate the differences that may exist between older SEP-III plant CCW system designs and newer plant CCW system designs. Significant differences at Point Beach are:

- Containment fan coolers and the spent fuel cooling heat exchangers are supplied with cooling water by the service water system in lieu of CCW. CCW vital cooling loads include: the RHR heat exchangers, the RHR/LPSI pump seal water heat exchangers, and the HPSI pump seal water heat exchangers, and the containment spray pump seal water coolers.

- Non-vital loads include: the letdown heat exchangers , sample coolers, boric acid evaporators, RCP seal water heat exchangers, radwaste system component cooling, RCP motor and bearing coolers, RCP thermal barrier coolers, and the excess letdown heat exchanger.

- Neither RCP seal injection or thermal barrier cooling are considered safety-related functions at Point Beach; instead, they rely on these redundant non-safety-related means to assure integrity of the reactor coolant pressure boundary at the RCP seals.

- Point Beach has no licensing requirements for the capability to achieve or maintain cold shutdown using only safety-related equipment as outlined in NRC Reactor Systems Branch Position RSB 5-1 for cold shutdown capabilities. Point Beach maintains that their licensed safe shutdown condition is for hot shutdown. Therefore, the shutdown cooling function of the RHR system is not considered safety-related. However, FSAR Chapter 14 credits the shutdown cooling function of RHR in mitigation of main steam line break and steam generator tube rupture accidents.

- The Point Beach CCW system design provides a dedicated CCW system for each unit. Each unit's CCW system contains two pumps and two heat exchangers. The Unit 1 and 2 CCW systems may be cross-connected via normally closed manual isolation valves at the pump suction and discharge, and one heat exchanger in each system may be aligned to the opposite unit. However, the CCW systems do not meet the separability and redundancy requirements of GDC 44 and NUREG-0800, Section 9.2.2, as the CCW pumps, CCW heat exchangers, and vital loads share common supply and return lines.

- Non-vital cooling loads do not have remote isolation capability. Non-vital component isolation valves consist of manual gate or globe valves at the component suction and discharge.

- The CCW supply and return lines (three each) inside containment to the excess letdown heat exchanger and the RCP motor, bearing, and thermal barrier coolers are not missile protected. The supply lines to the RCPs contain an MOV isolation valve outside containment and a check valve inside containment. However, only the MOVs are designated as a containment isolation valves. The RCP return lines have a single MOV containment isolation valve located outside containment. The excess letdown heat exchanger supply line contains a single check valve inside containment. The return line contains a fail-closed AOV for containment isolation. None of the containment isolation valves are capable of auto closure. In lieu of redundant containment isolation valves, Point Beach credits the CCW system outside containment as a "closed system outside containment." Therefore, the entire system outside containment, excluding the branch lines to the radwaste cooling loads, are considered an extension of containment and are Seismic Category I and ASME Class 2. It is not known if leakage testing is performed on the system outside containment.

- Common containment supply and return headers contain additional isolation capability to isolate a break in the lines inside containment (MOV on the supply line and check valve on the return line). However, operator action would be required to isolate a break. The CCW lines inside containment range in size from 1 to 4 in. (25 to 102 mm). Loss of system inventory due to a line break inside containment would result in a loss of system safety function if the lost inventory exceeded the volume of the surge tank without makeup. The normal volume of the surge tank (middle of the high-low level band) is 1000 gallons (4546 L). Point Beach relies on redundant non-safety-related makeup sources to the CCW system, one from the plant demineralizers and one from the reactor makeup tank. Leakage from a line break in excess of the surge tank volume could also jeopardize containment integrity due to the potential of increased containment atmospheric leakage from the loss of a water seal in the CCW system outside containment.

6.3.3.5 Conclusions. In older nuclear plants where CCW systems were not designed with separable redundant trains, a break of a CCW line inside containment would result in a rapid loss of system inventory. A CCW break inside primary containment would require operator action to isolate the break. Plant-specific analyses would be required to determine the allowable operator response time for closure of the CIVs. Allowable isolation time would depend on surge tank volume, system pressure, qualified makeup sources (if any), and break size. Failure to isolate the break in a timely manner would result in a loss of CCW system function. A loss-of-system function would be significant as it would result in a loss of cooling water to safety-related components necessary for accident mitigation and safe shutdown, including:

- Residual heat removal heat exchangers
- RHR/LPSI and HPSI pump and seal coolers
- Letdown heat exchanger
- Reactor coolant pump seal water heat exchangers
- Reactor containment fan coolers
- Containment penetration coolers (some containment designs do have penetration cooling)
- Spent fuel pool cooling heat exchangers (may be vital or non-vital depending on licensing basis)
- Centrifugal charging pump coolers

In lieu of double containment isolation valves, some plants credit a single containment isolation valve and a "closed system outside containment" as the redundant barriers. Where only one containment isolation valve is provided and the second barrier is provided by a "closed system outside containment," failure of the power operated valve to close (either due to valve failure or operator inaction), or loss of valve power (MOVs fail "as is") could also result in loss of containment integrity due to voiding of piping outside containment and a loss of a water sealing.

Additionally, older plant CCW systems may not provide the redundancy, separability, or isolation capabilities of later plant designs; therefore, they may not be capable of performing required safety functions given a passive failure of piping or components.

6.3.4 RBCCW System

A simplified schematic of a typical reactor building closed cooling water (RBCCW) system is shown in Figure 6-2. RBCCW is a closed loop cooling system which provides an interface between equipment coolers and plant heat exchangers and the environment. Raw service water often presents corrosion (salt water) or erosion (silt and debris) problems. These problems are minimized by use of an intermediate demineralized water cooling system (RBCCW). Additionally, an intermediate closed loop cooling system lessens the likelihood of release of radioactive contamination to the environment. The majority of the coolers and heat exchangers served by RBCCW have radioactive fluid on the primary side. Although the basic functions of RBCCW are the same for BWR/2, BWR/3, and BWR/4 reactor plants, there are significant differences in design, classification, and the system licensing bases from one facility to the next. For example, the spent fuel pool cooling system is safety-related at some facilities and non-safety-related at others. The system design and containment isolation provisions may meet 10CFR50, Appendix A, General Design Criteria (GDC) at some plants. However, most older plants were designed and licensed based on the designer's "interpretation of the intent" of the draft GDC published in 1967. Two major differences between the draft GDC of 1967 and the final GDC published in 10CFR50 in 1976 are in the requirements for primary containment isolation and cooling water systems. The list of SEP-III plants includes one BWR/2, four BWR/3, and eleven BWR/4 reactors. The typical functions for normal and post-accident RBCCW system operation are outlined in the below, followed by specific differences noted at the SEP-III plants. Although the "typical" RBCCW system design and the specific design differences of the SEP-III BWRs are noted in this report, the specific current licensing bases for each facility were not researched.

6.3.4.1 Normal System Operation. The reactor building closed cooling water (RBCCW) system provides cooling to components in the reactor building and drywell. Typical cooling loads include:

1. Drywell sump heat exchangers (non-safety-related)
2. Drywell coolers (non-safety-related)
3. Drywell compressor heat exchangers (non-safety-related)
4. Recirculation pump seal, motor, and pump bearing coolers (non-safety-related)
5. CVCS system non-regenerative heat exchanger (NRHX) (non-safety-related)
6. Reactor water cleanup system pump coolers (non-safety-related)
7. Spent fuel pool cooling system heat exchangers (may or may not be safety-related)
8. RHR/shutdown cooling pump bearing coolers and pump seal coolers (may or may not be safety-related)

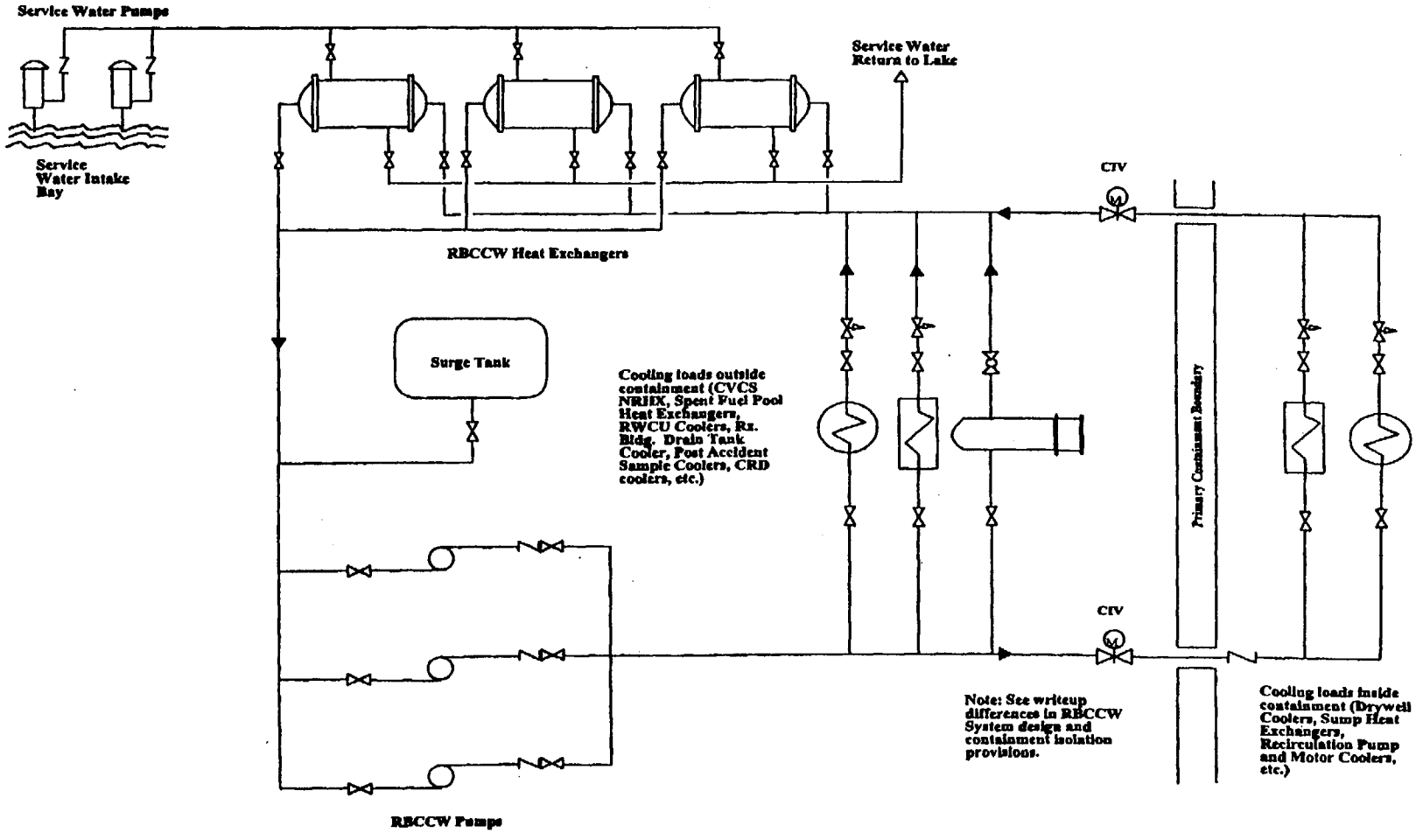

Figure 6-2. RBCCW system.

9. Reactor building drain tank heat exchanger (non-safety-related)

10. Control rod drive pump coolers (non-safety-related)

11. Post accident sample coolers (non-safety-related).

Heat from the RBCCW is typically discharged to the service water system via the RBCCW heat exchangers.

6.3.4.2 Post-Accident/HELB Functional Requirements. The cooling loads inside containment are non-safety related. The drywell coolers, sump heat exchangers, and recirculation pump coolers are necessary for normal plant operation but are not required to mitigate the consequences of an accident or to bring the plant to the safe shutdown condition. Loss of RBCCW to recirculation pump seals may result in seal failure; however, providing cooling water to recirculation pump seals is not typically credited as a safety-related function, especially if the loss of coolant is within the capacity of normal makeup [see the exclusion criteria of 10CFR50.55a(c)(2)]

The RBCCW supply and return lines penetrating containment are equipped with containment isolation valves (CIVs). However, these CIVs are typically remote manual motor-operated valves (MOVs) that do not receive an automatic containment isolation closure signal. Additionally, the isolation provisions may meet the requirements of GDC 54, and 56 or 57, of 10CFR50 Appendix A. GDC 57 allows a single containment isolation valve outside for isolation of closed systems inside containment. However, NUREG-0800, Section 6.2.4, *Containment Isolation System,* Paragraph I.6.o., requires (among other things) that closed systems inside containment be protected against missiles and pipe whip, be Seismic Category I, and be Safety Class 2 (ASME Code Class 2). In many older BWRs, there may be only one isolation valve since the system may be considered a closed system inside containment, even though the portion of the system inside containment may not be Seismic Category I or ASME Code Class 2. This is because the older plants were licensed to 10CFR50, Appendix A, and NUREG-0800 requirements. Although the RBCCW CIVs do not typically close automatically in response to a containment isolation signal, some designs incorporate isolation valves that close automatically in response to a low RBCCW system pressure signal to isolate non-essential cooling loads.

RBCCW cooling loads outside containment are typically considered non-safety-related at older plants, although there are licensing differences between facilities. Loads that may be considered safety-related would be: the spent fuel pool cooling heat exchangers; the RHR pump bearing coolers, pump seal coolers, and room coolers. Many plants have re-analyzed the need for the RHR pump and room coolers and have determined that they are not necessary to mitigate the consequences of an accident or to bring the plant to safe shutdown.

The RBCCW systems typically do not have a safety-related makeup source and the system surge tank is not sized to accommodate a significant loss of fluid. Therefore, an RBCCW pipe break inside containment would likely result in the loss of RBCCW function if the break inside containment is not automatically isolated. Loss of RBCCW cooling would not be significant if no cooling loads are safety-related. However, depending on the facility, a loss of RBCCW could result in loss of cooling to some safety-related components. These cases are specifically identified in the following sections. For facilities where RBCCW is not equipped with redundant CIVs, an RBCCW pipe break inside containment could result in a loss of containment integrity if a single containment isolation valve failed to close in response to remote manual operation.

6.3.4.3 Comparison to RBCCW Systems in Newer Plants. A cursory review of newer BWR plant designs (BWR/5s: Nine Mile Point 2, LaSalle 1&2, WNP-2, and BWR/6s: Clinton, Perry 1&2, River Bend, and Grand Gulf) was performed for the purposes of comparison to the older plant designs. Except for LaSalle 1&2, the RBCCW systems at all plants provide cooling water to some

safety-related components (e.g., the spent fuel pool heat exchangers, ECCS pump and room coolers, control room coolers, and RHR pump seal coolers) during normal operation. However, in abnormal or emergency situations, these cooling loads are automatically or manually aligned to a safety-related cooling water system. At LaSalle 1&2, the licensing basis for RBCCW is that the system performs no safety-related functions since it is not necessary for safe plant shutdown during or after a design basis LOCA. All the newer plant designs comply with the containment isolation requirements of GDC 54 and 57. All the newer BWRs have remote manual CIVs and, except at Grand Gulf and LaSalle, all the RBCCW CIVs close automatically upon receipt of a safety injection signal. It is also interesting that the FSARs of some newer plants (River Bend) specifically state the recirculation pump seal coolers are not safety-related, while others (WNP-2) specifically state that providing cooling water to the recirculation pump seal coolers is a safety-related function. Even among the newer plants, the licensing basis differs from one facility to the next.

6.3.4.4 BWR/2 Plants. Nine Mile Point 1 is the only SEP-III plant that is a BWR/2. Significant differences from the "typical" RBCCW system design are as follows:

1. RBCCW supplies cooling to the shutdown cooling heat exchangers. It is not known whether shutdown cooling is safety-related; however, it typically is not considered safety-related at older plants such as Nine Mile Point 1. Nine Mile Point 1 has separate LPCI and shutdown cooling systems. For later vintage BWR plants with RHR systems, the RHR pumps also perform ECCS functions (LPCI).

2. There are four RBCCW lines that penetrate containment, two lines (supply and return) for the recirculation pump coolers and two lines (supply and return) for the drywell coolers. A single check valve outside containment provides primary containment isolation for the supply lines. A single DC powered MOV outside containment provides primary containment isolation for the return lines. It is not known whether these MOVs close automatically in response to low system pressure or for containment isolation.

6.3.4.5 BWR/3 Plants. Monticello, Dresden 3, and Quad Cities 1 and 2 are the BWR/3, SEP-III plants. Significant differences from the "typical" RBCCW system design are as follows:

1. There are two RBCCW lines that penetrate containment. There are two CIVs for each piping penetration, one outside containment and one inside containment. The CIVs are MOVs except that the inside CIV on the RBCCW supply line is a check valve. The MOVs do not close automatically in response to low system pressure or for containment isolation.

2. At Quad Cities, RBCCW does not supply the RHR pump coolers.

6.3.4.6 BWR/4 Plants. The BWR/4, SEP-III plants are: Pilgrim, Vermont Yankee, Browns Ferry 1, 2, and 3, Peach Bottom 3 and 4, Duane Arnold, Cooper, Hatch 1, Fitzpatrick, and Brunswick 2. Significant differences from the "typical" RBCCW system design are as follows:

1. At Pilgrim, RBCCW supplies RCIC area coolers, HPCI area coolers, core spray pump thrust bearing coolers, and the RHR heat exchangers (safety-related cooling loads are normally supplied directly by service water). Cooling loads are split between two independent trains of RBCCW. Two normally closed manual valves isolate the supply and return crossties between trains. The containment loads are normally supplies from train "B." There are two RBCCW lines that penetrate containment with one CIV in each line. The supply line CIV is a check valve located outside containment. The return line CIV is an MOV located outside containment. There are also MOV isolation valves for the non-critical cooling loads (including containment). It is not known whether these MOV isolation

valves receive an automatic closure signal in response to system low pressure.

2. At Vermont Yankee, the CIV on the RBCCW supply line is a single check valve outside containment. The CIV on the return line is a single MOV outside containment.

3. At Brown's Ferry, the RBCCW supply line to containment is equipped with two CIVs, an MOV and a check valve, both outside containment. The RBCCW return line from containment is equipped with two CIVs, both MOVs located outside containment. RBCCW does not supply the RHR coolers.

4. At Peach Bottom, the drywell air coolers, drywell sump cooler, and the recirculation pump motor coolers are cooled by a separate chilled water system which may be cross connected to RBCCW in an emergency. RBCCW supplies the recirculation seal coolers and oil coolers. The four chilled water lines that penetrate primary containment (two supply lines and two return lines) are equipped with a single MOV CIV located outside containment on each line. There are two RBCCW lines that penetrate containment (one supply and one return). Both RBCCW penetrations are equipped with a single MOV CIV located outside containment. None of these MOV CIVs receive automatic closure signals. RBCCW does not supply the RHR coolers. RBCCW may provide spent fuel pool cooling via removable spool pieces.

5. Duane Arnold has one MOV CIV on the supply line to primary containment and one CIV on the return line from primary containment, both located outside the penetration. Both valves receive an automatic isolation signal in the event of low reactor vessel water level. RBCCW does not supply the RHR pump coolers.

6. At Cooper, RBCCW (called the reactor equipment cooling system) supplies HPCI, core spray, and RHR pump area coolers which are required post-accident. The containment isolation valves (MOV outside and check valve inside on the supply line, MOV outside on the return line) do not receive an automatic closure signal from the containment isolation system; however, an isolation valve in each supply line to non-critical cooling loads closes automatically in the event of low system pressure. The RBCCW system may supplied directly from service water. All non-critical portions of the RBCCW system are non-seismic (Seismic Category II), including piping inside the drywell, and supply piping to the RWCU, CRD, fuel pool, and sample heat exchangers.

7. At Brunswick, the RBCCW supply line to containment has an MOV CIV outside and a check valve inside. The check valve is not considered a CIV. The RBCCW return line has an MOV CIV outside containment. The MOVs do not receive an auto closure signal. There are also two 2-in. (51-mm) RBCCW sample lines that penetrate primary containment. Each sample line has a single AOV CIV which does not receive an automatic closure signal. The RHR pumps are not supplied by RBCCW.

8. At Hatch, RBCCW does not supply the RHR pump coolers or the drywell coolers. The drywell air coolers are cooled by a separate chilled water system. Both the drywell chilled water system and RBCCW have a single MOV CIV located outside containment for each primary containment penetration. It is not known whether the CIVs receive an automatic closure signal.

9. At Fitzpatrick, the drywell cooling loads are normally supplied by RBCCW via four supply lines and four return lines. Each primary penetration has a single AOV isolation valve located outside containment. It is not known whether the CIVs receive an automatic closure signal.

However, emergency service water (ESW) may also be used for cooling. ESW ties into the RBCCW supply and

return lines outside of the CIVs. Each ESW supply line is normally isolated by a closed MOV. ESW also supplies the RHR pump coolers.

6.3.4.7 Conclusions. A break of an RBCCW line inside containment would result in a rapid loss of system inventory. Typically, CIVs on the RBCCW supply and return lines to containment do not close automatically. Failure to isolate the break in a timely manner would result in a loss of RBCCW system function. A loss of system function would not be significant at facilities where RBCCW performs no safety-related cooling functions. ECCS area room coolers, ECCS pump and seal coolers, and spent fuel pool cooling heat exchangers may perform safety-related cooling functions, depending on plant specific analyses and licensing requirements. Plant specific reviews of the licensing bases would be required to determine whether these cooling for these components is safety-related.

Typically, an RBCCW break inside containment would require operator action to isolate the break. Plant specific analyses would be required to determine the allowable operator response time for closure of the containment isolation valves. Allowable isolation time would depend on surge tank volume, system pressure, qualified makeup sources (if any), and break size.

Many RBCCW system designs do not incorporate double containment isolation valves. Where only one isolation valve is provided, a single failure (valve failure to close or loss of power to MOVs which fail "as is") could result in loss of system function due to inventory loss and a loss of containment integrity. Where double CIVs are provided, but the valves do not close automatically, operator action would be required to assure containment integrity. Where containment cooling loads are supplied by a separate chilled water system, the same concerns exist (single containment isolation valves that may not auto-close). All CIVs should be tested in the Inservice Testing Program to verify closure capability and the Appendix J Program to verify leak-tight integrity.

The Pilgrim RBCCW system cools numerous safety-related components; however, the plant RBCCW system differs from the typical design in that there are two independent trains with safety-related cooling loads split between trains. All drywell cooling loads are supplied by train "B". Therefore, a break inside containment would not result in a total loss of system function, although loss of containment integrity may still be a concern.

6.3.5 Valve Failure Probabilities

The valve failure rates in Table 6.6 were taken from the first source listed below.

Table 6-6. Proposed failure rates of various types of water/steam nuclear plant valves to open and close.

Valve Type	Failure Mode	EGG-SSRE-8875[a]	ASEP[b]	BNL[c]	IEEE STD 500[d]	Seabrook PRA[e]	WASH 1400[f]
Manual	Fail to open/close	5.0E-04 /D	—	2.0E-07 /H	—	—	—
Motor-operated	Fail to open/close	3.0E-03 /D	3.0E-03 /D	1.0E-05 /H	6.0E-03 /D	4.3E-03 /D	1.2E-03 /D
Pneumatic	Fail to open/close	1.0E-03 /D	1.0E-03 /D	1.0E-05 /H	2.0E-03 /D	1.5E-03 /D	3.8E-04 /D
Solenoid	Fail to open/close	5.0E-04 /D	1.0E-03 /D	2.0E-06 /H	—	2.4E-03 /D	1.2E-03 /D
Check	Fail to open	5.0E-05 /D	1.0E-04 /D	2.0E-07 /H	6.0E-05 /D	2.7E-04 /D	1.2E-04 /D
	Fail to close	1.0E-03 /D	1.0E-03 /D	2.0E-06 /H	—	2.7E-04 /D	—

Notes:

/D per demand
/H per hour

a. Eide, Chmielewski, and Swantz 1990.

b. Drouin, Harper, and Camp 1987.

c. Bari 1985.

d. IEEE 1983.

e. Public Service Company of New Hampshire 1983.

f. NRC 1975a.

7. COST ANALYSIS

Various changes in plant hardware and procedures have been proposed that could reduce the potential for, or mitigate the consequences of, pipe break. Some of these changes were required for SEP-II plants, some have been used to mitigate fatigue cracking such as in PWR feedwater nozzles and surge lines, while others have been applied to BWRs to reduce the break potential from IGSCC. A list of corrective actions that could reduce the pipe break probabilities of LWR piping follow.

7.1 Possible Corrective Actions

7.1.1 Plant Design Changes

Plant design changes can be made to mitigate degradation or to enhance plant protection for accident sequences involving pipe breaks.

a. Install additional auxiliary feedwater pump (PWR)

   Adding a separate/redundant feed pump would increase reliability of the protective system and decrease reliance on feed and bleed.

b. Install auxiliary feedwater pump recirculation line (PWR)

   A recirculation line would allow operators to control auxiliary feedwater flow more precisely and reduce temperature swings on the feedwater nozzle which is a cause of nozzle fatigue cracking.

c. Preheat auxiliary feedwater (PWR)

   Preheated auxiliary feedwater would reduce thermal shocks on feedwater nozzles and piping and would slow the accumulation of fatigue damage at these locations.

d. Enhance leak detection (PWR and BWR)

   This action would allow the plant to be shut down for repair more quickly once a leak develops. Otherwise the leak may grow until there is a pipe break. However, there is an economic benefit to keeping the plant on line as long as possible until the technical specification leakage limit is reached. This would depend on the length of time into the operating cycle, the utility's load, and the availability of other plants in the system. Based on these highly variable considerations, there may be no overall cost advantage in this change. Consequently, no costs were estimated for this action.

e. Replace piping with alternate material (BWR)

   Alternate materials which are more resistant to IGSCC and fatigue than the existing piping material would reduce the probability of pipe break. The use of solution heat treatment or heat sink welding would upgrade the material (NRC, 1988c). Portions of systems containing pipe break locations would be affected.

7.1.2 Protective Hardware

Plant modifications can be made to prevent or minimize damage to other (target) components in the event of a pipe break or major leak.

a. Install jet shields (PWR and BWR)

   Jet shields provide barriers that protect potential targets from jet impingement caused by large leaks. The cost estimate assumes two large jet shields per plant would be required.

b. Install whip restraints (PWR and BWR)

   Whip restraints limit travel of a ruptured pipe so that it cannot impact adjacent targets. The cost estimate assumes eight large whip restraints would be required.

c. Install impact absorbers (PWR and BWR)

Impact absorbers deform to absorb energy from a whipping pipe before it contacts a safety-significant target. An example is a network of crushable plates placed at strategic locations on the interiors of some BWR Mark I containments. The cost estimate assumes that impact absorbers of the same design used on current BWRs that have already been analyzed and tested for impact absorbing capability will be used. Limited areas of the containment interior vulnerable to specifically identified pipe break locations would be shielded. The cost estimate assumes that an existing impact absorber design is used. No costs associated with developing, analyzing, and testing new designs were assumed.

7.1.3 Preventive Hardware

Localized piping modifications can be made to prevent pipe rupture.

a. Install pipe clamps (PWR and BWR)

Pipe clamps could be installed on either side of a weld and tied together by bolts/studs. In the event of a pipe break, the clamping device would hold the two ends of the pipe in place. Since Generic Letter 88-01 (NRC 1988c, 1992) approved this modification only as a temporary measure, it will not be costed for potential permanent pipe break mitigation.

b. Provide pipe weld overlays (BWR)

A weld overlay strengthens the pipe weld to reduce the probability of failure. This procedure has been used on BWR piping such as recirculation systems to mitigate the effects of IGSCC (Generic Letter 88-01, NRC, 1988c, 1992). Weld overlays could result in lengthening IGSCC cracks along the circumference of the pipe. If the crack grows to the overlay material interface, there would be a significant weakening of the pipe. The use of weld overlays also brings into question the ability of UT surveillance techniques to find cracks before they reach a critical flaw size. Because of these negative aspects of weld overlays, they will not be costed for potential pipe break mitigation.

c. Conduct stress improvement process (BWR)

Stress improvement processes have been developed that place the surface of the metal in compression and thereby reduce the potential for crack growth. The cost estimate assumes that an existing technique is used.

7.1.4 Operating/Procedure Changes

Plant operating and/or procedure changes can be made that will mitigate the effects of degradation mechanisms that may cause pipe breaks.

a. Improve water chemistry (PWR secondary piping and BWRs)

An improvement in the water chemistry could reduce the potential for stress corrosion cracking, erosion-corrosion, and fatigue. An example is Hydrogen Water Chemistry in BWRs. The cost estimate assumes that an existing (previously developed) treatment plan is used. No costs are associated with developing new plans.

b. Use procedural changes to reduce surge line thermal stratification and auxiliary feedwater/heatup thermal cycling (PWR)

Using auxiliary feedwater in the automatic mode may result in numerous on-off cycles that shock the feedwater piping and nozzles, whereas a continuous manual feed significantly reduces the number of thermal shock cycles. During plant heatup, the bubble drawing procedure and limits on the difference in temperatures of the pressurizer and reactor coolant system can limit the thermal stratification stresses

in the pressurizer surge line and thus reduce the fatigue usage in the surge line piping and nozzles. The estimated costs include document changes and training, but assumes that no additional time is required to perform plant operations. No hardware modifications are included in the cost estimate.

7.1.5 Test/ISI

Inservice test and inspection procedures can be changed to assist in identifying impending pipe breaks.

a. Conduct more frequent inspections (PWR and BWR)

More frequent inspections of critical areas would alert plant personnel if a crack or some other type of degradation were developing. This would allow preventative measures to be undertaken before significant degradation occurs. The estimate is based on using current inspection methods on a large system such as the feedwater system.

b. Enhance inspection techniques (PWR and BWR)

Using enhanced inspection methods on critical areas would allow better degradation detection, particularly for hard-to-detect cracks such as those caused by thermal fatigue. The estimate is based on training the plant staff to familiarize themselves with an existing enhanced technique. No development costs for new techniques are included. After the initial inspection, subsequent inspection costs are judged to be half the initial cost. The estimate is based on inspecting a large system such as the feedwater system.

c. Conduct monitoring programs (PWR and BWR)

Programs that monitor potential degradation areas and mechanisms can give early warning of potential pipe breaks so that preventative measures can be undertaken. An example is the placement of coupons made of the same material as the component to be monitored, and with implanted defects, that can be placed near the component to be monitored and periodically examined to estimate the rate of crack growth.

7.1.6 Analysis

Although analysis by itself has no effect on the actual probability of core damage, a reanalysis could lower the calculated pipe break frequency and CDF, on which the off-site dose is based.

a. Update stress analysis (PWR and BWR)

The existing stress analysis may contain conservative assumptions that result in high stresses that, although they meet ASME Code stress criteria, identify points as break locations. If the stress analysis was redone in an attempt to reduce the stresses, fewer break points may be identified causing the calculated break probability for a system to be reduced. This would in turn reduce the CDF. Additionally, there would be fewer targets and fewer mitigation actions would be required. An estimated four systems per plant could benefit. The cost estimate assumes that no fatigue monitoring systems would be added. The cost of installing a fatigue monitoring system is estimated at $250K per plant.

b. Update fatigue analysis (PWR and BWR)

The existing fatigue analysis may contain conservative assumptions that result in a Cumulative Usage Factor (CUF) that is less than the ASME Code criterion of 1.0, but identifies points as break locations because the CUF is greater than 0.1. If the fatigue analysis was redone in an attempt to reduce the CUF, fewer break points may be identified causing the calculated break probability for a system to be reduced. This would in turn reduce the

CDF. Additionally, there would be fewer targets and fewer mitigation actions would be required. An estimated four systems per plant could benefit. The cost estimate assumes that no fatigue monitoring systems would be added. The cost of installing a fatigue monitoring system is estimated at $250K per plant.

7.2 Cost Estimates

The applicability of cost factors from NUREG/CR-4627, Rev. 2 (Claiborne, 1989) were reviewed. The various categories, using their NUREG/CR-4627 abstract section numbers, are summarized in Table 7-1. Not every category is applicable to each of the potential changes. It is assumed that all modifications will take place during scheduled plant outages and will not extend those outages. The cost estimates for potential improvements that would reduce the CDF caused by pipe breaks are listed in Table 7-2.

7.3 Plant Walkdowns

Our experience in GSI 156-6.1 has shown that a great deal of the balance-of-plant piping, as well as the electrical and hydraulic instrument and control lines, are field routed in both BWRs and PWRs. Consequently, the best and possibly only way to determine the proximities of high-energy lines and their potential targets in the event of a line break are by in-plant walkdowns. This is consistent with the SEP-II plant corrective actions, in that those actions were very plant-specific, indicating that a generic plan to cover all SEP-III plants without evaluating them individually is impractical. Accordingly, the following cost estimate has been developed for such walkdowns.

7.3.1 Assumptions

1. The pipe break scenarios and targets, both piping and electrical, have been identified through contractor PRA studies and agreed upon by the NRC/RES staff.
2. Contractor and NRC/RES staff members, both electrical and piping disciplines, will develop and review the plan.
3. A report on the project will be prepared separately, and the implementation plan is simply added to the report (no additional report from contractor).
4. Contractor and NRC/RES staff members will instruct the NRC/NRR staff on implementation, and resolve NRC/NRR comments/questions.
5. NRC/NRR staff and/or contractor personnel will conduct the walkdowns with licensees.
6. NRC/Resident Inspectors will assist the NRC/NRR staff at the plants. However, it is assumed that this is part of their normal duties (their normal work station is at the plant), so no extra cost was added.
7. NRC/NRR will enter any required changes into Bulletins, regulations, etc.
8. Estimates do not include costs for the resolution of findings (changes to procedures, physical plant changes, etc.).

7.3.2 Costs

The cost estimate is listed in Table 7.3. The assumption is that a contractor would develop a walkdown plan, have it reviewed by the NRC staff and incorporate comments, and have a meeting with the NRC staff to discuss how to implement the plan (Part 1). This would be done once. The NRC staff would review the plan, meet with the contractor on implementation, and transmit requirements to licensees and NRC field offices (Part 2). This would be done once for an estimated cost of $70K.

A walkdown would be performed for each affected plant. Resources would be required from both the licensee (Part 3) and the NRC staff or contractor (Part 4) for each plant. The estimated cost for the walkdowns is $55K per plant. This does not include any corrective actions resulting from the walkdowns.

Table 7-1. Applicability of NUREG/CR-4627 categories.

NUREG/CR-4627 Abstract Number	Subject	Applicable
2.1	**Impacts associated with physical modifications**	
2.1.1	Startup and shutdown costs	NA
2.1.2	Replacement energy costs	NA
2.1.3	Reactor defueling, primary system drainage, and recovery	NA
2.1.4	Radioactive waste disposal	Yes
2.1.5	Anti-contamination clothing	Yes
2.1.6	Health physics services	Yes
2.1.7	Labor costs for the installation of hardware, materials, and structures	Yes
2.1.8	Labor costs for the removal of hardware, materials, and structures	Yes
2.1.9	Greenfield costs for piping and piping-related commodities	Yes
2.2	**Impacts associated with procedural, administrative, and analytical requirements**	
2.2.1	Licensee costs for technical specification change	Yes
2.2.2	Industry costs for writing or rewriting procedures	Yes
2.2.3	Industry costs for training or retraining staff and writing or rewriting training manuals	Yes
2.2.4	Industry costs for changes in recordkeeping and/or reporting requirements	Yes
2.3	**Task-specific costs**	
2.3.1	Steam generator replacement	NA
2.3.2	Steam generator tube inspection	NA
2.3.3	Steam generator tube repair	NA
2.3.4	Centrifugal pump shaft seal replacement costs	NA
4.1	Typical system-average dose rates	Yes
4.2	Occupational radiation exposure for specific repair/modification activities	Yes
4.3	Occupational radiation exposure for physical modification activities	Yes
5.1	NRC costs for technical specification change	Yes
5.2	NRC labor rates	Yes
6.1	Estimation of nuclear plant radioactive waste generation volumes	Yes
6.2	Industry labor rates	Yes
6.3	Time-related cost adjustments (accounts for inflation and escalation costs.)	Yes
6.4	Engineering and quality control cost factors (the engineering/ quality assurance cost factor (%) is 25–33% for requirements affecting structures/systems already in place.	Yes

Table 7-2. Cost summary.

	Radiation Involved[a]	Cost
I. Plant design changes		
a. Install additional auxiliary feedwater pump	No	$400K/plant
b. Install auxiliary feedwater pump recirculation line	No	$200K/plant
c. Preheat auxiliary feedwater	No	$500K/plant
d. Enhance leak detection	Possible	$500K/plant
e. Replace piping with alternate material	Yes	$120M/recirc line
II. Protective hardware		
a. Install additional jet shields	Yes	$75K/shield
b. Install additional whip restraints	Yes	$150K/restraint
c. Install impact absorbers	Yes	$250K/plant
III. Preventive hardware		
a. Install pipe clamps	Yes	NA[b]
b. Provide pipe weld overlays	Yes	$750K/line[b]
c. Conduct stress improvement process	Yes	$25K/weld
IV. Operating/procedure changes		
a. Improve water chemistry	Possible	$5M/plant (installation)
b. Procedural changes to reduce surge line thermal stratification and shocks from aux. feed	No	$100K/plant
V. Test/ISI		
a. Conduct more frequent inspections	Yes	$120K/line
b. Enhance inspection techniques	Possible	$150K/line[c]
c. Conduct monitoring programs	Possible	$300K/plant
VI. Analysis		
a. Update stress analysis (PWR and BWR)	No	$100K/plant[d]
b. Update fatigue analysis (PWR and BWR)	No	$75K/plant[d]

Notes:

a. Sections 2.4 through 2.6 and Section 4 of Table 7-1.

b. Not recommended for permanent pipe break mitigation.

c. Includes training on enhanced technique.

d. Does not include any fatigue monitoring.

The recommended corrective actions for this issue would be in the II (protective hardware) and V (test/ISI) categories.

Table 7-3. Plant walkdown cost estimate.

Part	Performer	Cost
1	Contractor	$36K
2	NRC staff	$34K
3	Licensee	$22K/plant
4	NRC staff/Contractor	$33K/plant

8. CONCLUSIONS

The general conclusions reached in this program are:

1. No BWR SEP-III plants have leak-before-break (LBB) approval (1995).

2. All SEP-III PWR plants have LBB approval for their reactor coolant systems. One SEP-III plant has LBB approval for its surge line (1995).

3. There have been few through-wall leaks of LWR large high-pressure piping inside containment. Therefore, the failure rates have a large uncertainty. There are no models which have been produced that are sophisticated enough to estimate variances in pipe break frequencies for different LWR materials, fabrication methods, repair methods, or stress improvement methods.

4. Most pipe break frequency estimates can be traced back to the same references, many of which are fairly old. The break frequencies in NUREG-1150 were used for this study.

5. Only a small number of inspection, procedural, and physical modifications were required by the NRC for SEP-II plants. The average was slightly more than two changes per plant. No common locations or documented reasons for the modifications were determined.

6. Early-timeframe SEP-III plants had pipe break protection and evaluations similar to SEP-II plants. Mid-timeframe SEP-III plants had more emphasis placed on their pipe break protection.

7. Later-timeframe SEP-III plants considered inside-containment pipe-break effects in a fashion similar to current criteria. All of these plants indicated that their evaluation of pipe breaks met the intent or satisfied RG 1.46. The inside-containment pipe-break protection in these plants appears to be the same as for SRP plants.

8. Our observations of two PWR and three BWR plants showed that while the RCSs or PCSs of these plants are all similar, the branch piping and electrical conduits are field routed in different manners, leading us to the conclusion that the field routing makes each plant unique in terms of the proximity of pipe breaks and potential targets.

9. The main physical barriers for pipe break protection are whip restraints, jet impingement shields, containment liners, and concrete walls (PWRs only).

10. The physical separation of components is much greater in PWRs than in the Mark I BWRs.

11. Based on all the possible field routing situations, we developed a rather large first-level list of potential concerns. The list was considerably narrowed to a second-level list based on the systems that we observed in the plants that were visited.

12. A qualitative ranking of high, medium or low was applied to the pipe break sequences identified in the second-level list. The rankings were based on the potential to increase the CDF or offsite consequences. No sophisticated PRA analyses were used.

13. Six BWR [breach of containment shell (from MS/FW, RHR, or recirculation piping), damage to CRD lines (from recirculation or RHR piping), damage to safety-related instrument and control systems (from any HELB)] and two PWR [damage to safety-related instrument and control systems (from any HELB) and breach of containment shell (from MW/FW piping)] sequences were ranked medium or high.

14. The CDF mean frequency changes for the BWR sequences ranked high or medium were on the order of 10^{-4} to 10^{-6} events/rx-yr. The CDF mean frequency change for the two PWR events was on the order of 10^{-4} events/rx-yr for one and 10^{-9} events/rx-yr for the other.

15. BWR Event 5 (see page 105) is a part of GSI-80.

16. For loss of containment integrity caused by rupture of the PWR CCW and the BWR RBCCW systems initiated by a pipe break inside containment, with valve failure of a single isolation valve, the mean frequency was estimated to be on the order of 10^{-9} events/rx-yr.

17. A number of corrective actions are available to reduce the risk. Protective hardware and increased ISI are the recommended choices. In some cases, rerouting of electrical/pneumatic lines may be the best alternative.

18. We found that since the field routing of most of the lines is plant-specific, any corrective actions must also be plant-specific. This is consistent with the corrective actions for the SEP-II plants, for which the changes imposed by the NRC varied from plant-to-plant. Therefore, a plant-by-plant walkdown is recommended to decide what, if any, corrective actions are needed for each plant.

9. REFERENCES

Atomic Energy Commission, 1973a, Regulatory Guide 1.45, "Reactor Coolant Pressure Boundary Leakage Detection Systems," May 1973.

Atomic Energy Commission, 1973b, Regulatory Guide 1.46, "Protection Against Pipe Whip Inside Containment," May 1973 (currently withdrawn).

Atomic Energy Commission, 1974, Regulatory Guide 1.75, "Physical Independence of Electrical Systems," February 1974.

AEC, 1975, "Reactor Safety Study: An Assessment of Accident Risks in U.S. Commercial Nuclear Power Plants," WASH-1400 (NUREG 75/-014).

Bari, R.A., et al., 1985, "Probabilistic Safety Assessment Analysis Procedures Guide," NUREG/CR-2815.

Basin, S.L., and E.T. Burns, 1977, *Characteristics of Pipe System Failures in Light Water Reactors*, EPRI NP-438, prepared for the Electric Power Research Institute by Science Applications, Inc., Palo Alto, CA.

Brinkman, D.S., 1989, (NRC) letter to S.R. Bram (Consolidated Edison), "Safety Evaluation of Elimination of Dynamic Effects of Postulated Primary Loop Pipe Ruptures from Design Basis for Indian Point Unit 2 (TAC no. 68318)," February 23, 1989.

Chan, T.L., 1988, (NRC) letter to D.W. Cockfield (Portland General Electric Company), "Elimination of Dynamic Effects of Postulated Loop Pipe Ruptures from Design Basis for Trojan Nuclear Plant (TAC No. 06596)," August 5, 1988.

Claiborne, E., et al., 1989, Generic Cost Estimates, NUREG/CR-4627, Revision 2.

Crutchfield, D.M., 1985, (NRC) letter to L.C. Oakes (B&W Owners Group), "Safety Evaluation of B&W Owners Group Reports Dealing with Elimination of Postulated Pipe Breaks in PWR Primary Main Loops," December 12, 1985.

Dilanni, D.C., 1986, (NRC) letter to D.M. Musolf (Northern States Power Company), December 22, 1986.

Drouin, M.T., F.T. Harper, and A.L. Camp, 1987, "Analysis of Core Damage Frequency from Internal Events: Methodology Guidelines," NUREG/CR-4550, Volume 1.

Eide, S.A., S.V. Chmielewski, and T.D. Swantz, 1990, "Generic Component Failure Data Base for Light Water and Liquid Sodium Reactor PRAs," EGG-SSRE-8875, EG&G Idaho, Inc., Idaho Falls, ID.

Edison, G.E., 1987, (NRC) letter to H.D. Hukill (GPU Nuclear Corporation), "Safety Evaluation Relating to Elimination of Dynamic Effects of Postulated Primary Loop Pipe Ruptures from Design Basis in Regard to TMI-1 (TAC 65003) ," November 5, 1987.

Edison, G.E., 1988, (NRC) letter to W.F. Conway (Florida Power & Light), "Turkey Point Units 3 and 4—Generic Letter 84-04, Asymmetric LOCA Loads," November 20, 1988.

Edison, G.E., 1990, (NRC) letter to W.F. Conway (Florida Power and Light), "Turkey Point Units 3 and 4—Generic Letter 84-04, Asymmetric LOCA Loads," November 28, 1988.

Eisenhut, D.G., 1984, (NRC) letter to all operating PWR licensees, construction permit holders, and applicants for construction permits, "Safety Evaluation of Westinghouse Topical Reports Dealing with Elimination of Postulated Pipe Breaks in PWR Primary Main Loops," Generic Letter 84-04, February 1, 1984.

Emrit, R., et al., 1993, *A Prioritization of Generic Safety Issues*, NUREG-0933, Supplement 16, November.

Gamberoni, M., 1992, (NRC) letter to T. M. Parker (Northern States Power Company), "Prairie Island Unit 1—Response to NRC Bulletin 88-11 (TAC No. M72157)," September 15, 1992.

Giambusso, A., 1972, AEC Deputy Director for Reactor Projects, Directorate of Licensing, generic letter to applicable BWR and PWR plants regarding postulated pipe failures outside of the containment structure, issued December 1972.

Hazleton, W.S., and W.H. Koo, 1988, *Technical Report on Material Selection and Processing Guidelines for BWR Coolant Pressure Boundary Piping*, NUREG-0313, Revision 2.

IEEE, 1969, "Criteria for Protection Systems for Nuclear Power Generation Stations," Institute of Electrical and Electronics Engineers, IEEE Standard 279-1969.

IEEE, 1971, "Criteria for Protection Systems for Nuclear Power Generation Stations," Institute of Electrical and Electronics Engineers, IEEE Standard 279-1971.

IEEE, 1983, "IEEE Guide to the Collection and Presentation of Electrical, Electronic, Sensing Component, and Mechanical Equipment Reliability Data for Nuclear-Power Generating Stations," IEEE Std. 500-1984.

Jamali, K., 1990, *A Study of Pipe Failures in U. S. Commercial Nuclear Power Plants*, prepared for Northeast Utility Services Company.

Kafka, P., and H. Adrian, 1989, "Reliability of Large Technological Systems," *5th International Conference on Structural Safety and Reliability, San Francisco, CA, August 7-11, 1989.*

Kolaczkowski, A.M., et al., 1989, *Analysis of Core Damage Frequency: Peach Bottom, Unit 2 Internal Events*, NUREG/CR-4550, Volume 5, Rev. 1, Part 1.

Lawrence Livermore National Laboratory, 1981, *Probability of Pipe Fracture in the Primary Coolant Loop of a PWR Plant*, NUREG/CR-2189, UCID-18967, Volumes 1 through 9.

Lawrence Livermore National Laboratory, 1984a, *Probability of Pipe Fracture in the Primary Coolant Loops of Westinghouse PWR Plants*, NUREG/CR-3660, UCID-19988, Volumes 1 through 4.

Lawrence Livermore National Laboratory, 1984b, *Probability of Pipe Fracture in the Primary Coolant Loops of Combustion Engineering PWR Plants*, NUREG/CR-3663, UCRL-53500, Volumes 1 through 3.

Lawrence Livermore National Laboratory, 1985-86, *Probability of Pipe Fracture in the Primary Coolant Loops of Babcock & Wilcox PWR Plants*, NUREG/CR-4290, UCRL-53644, Volumes 1 through 2.

Lo, T. et al., 1989, *Probability of Failure in BWR Reactor Coolant Piping, Volume 2 : Pipe Failure Induced by Crack Growth and Failure of Intermediate Supports*, NUREG/CR-4792, UCID-20914.

Nuclear Regulatory Commission, 1975a, *Reactor Safety Study—An Assessment of Accident Risks in U.S. Commercial Nuclear Plants*, WASH-1400.

Nuclear Regulatory Commission, 1975b, *Standard Review Plan for the Review of Safety Analysis Reports for Nuclear Power Plants (LWR Edition)*, NUREG-75/087, September 1975.

Nuclear Regulatory Commission, 1976, Regulatory Guide 1.26, "Quality Group Classification and Standards," Revision 3, February.

Nuclear Regulatory Commission, 1978, Regulatory Guide 1.70, "Standard Format and Contents of Safety Analysis Reports for Nuclear Power Plants (LWR Edition)," November 1978.

Nuclear Regulatory Commission, 1979a, "Cracking in Feedwater System Piping," USNRC Bulletin 79-13, Revisions 0, 1, and 2.

Nuclear Regulatory Commission, 1979b, *Investigation and Evaluation of Stress-Corrosion Cracking in Piping of Light Water Reactor Plants*, NUREG-0531, February.

Nuclear Regulatory Commission, 1980a, "Environmental Qualification of Class IE Equipment," IE Bulletin No. 79-01B, January 14.

Nuclear Regulatory Commission, 1980b, Regulatory Guide 1.97, "Instrumentation for Light-Water-Cooled Nuclear Power Plants to Assess Plant and Environs Conditions During and Following an Accident," December.

Nuclear Regulatory Commission, 1980c, *Investigation and Evaluation of Cracking Incidents in Piping in Pressurized Water Reactors*, NUREG-0691.

Nuclear Regulatory Commission, 1980d, *BWR Feedwater Nozzle and Control Rod Drive Return Line Nozzle Cracking*, NUREG-0619.

Nuclear Regulatory Commission,1981, *Standard Review Plan for the Review of Safety Analysis Reports for Nuclear Power Plants*, NUREG-0800, July 1981.

Nuclear Regulatory Commission, 1982a, "Supplement 1 to NUREG-0737—Requirements for Emergency Response Capability," Generic Letter 82-33, December 17.

Nuclear Regulatory Commission, 1982b, *Integrated Plant Safety Assessment—Systematic Evaluation Program—R. E. Ginna Nuclear Power Plant*, NUREG-0821, December 1982 and Supplement 1, August 1983.

Nuclear Regulatory Commission, 1982c, "Stress Corrosion Cracking in Thick Wall Large-Diameter, Stainless Steel Recirculation System Piping at BWR Plants", Bulletin 83-02.

Nuclear Regulatory Commission, 1983a, *Integrated Plant Safety Assessment—Systematic Evaluation Program—Palisades Plant*, NUREG-0820, October 1982 and Supplement 1, November 1983.

Nuclear Regulatory Commission, 1983b, *Integrated Plant Safety Assessment—Systematic Evaluation Program—Oyster Creek Nuclear Generating Station*, NUREG-0822, January 1983 and Supplement 1, July 1988.

Nuclear Regulatory Commission, 1983c, "Integrated Plant Safety Assessment—Systematic Evaluation Program—Dresden Nuclear Power Station, Unit 2," NUREG-0823, February 1983 and Supplement 1, October 1989.

Nuclear Regulatory Commission, 1983d, *Integrated Plant Safety Assessment—Systematic Evaluation Program—Millstone Nuclear Power Station, Unit 1*, NUREG-0824, February 1983 and Supplement 1, November 1985.

Nuclear Regulatory Commission, 1983e, *Integrated Plant Safety Assessment—Systematic Evaluation Program—Yankee Nuclear Power Station*, NUREG-0825, February 1983 and Supplement 1, October 1987.

Nuclear Regulatory Commission, 1983f, *Integrated Plant Safety Assessment—Systematic Evaluation Program—Haddam Neck Plant*, NUREG-0826, June.

Nuclear Regulatory Commission, 1983g, *Integrated Plant Safety Assessment—Systematic Evaluation Program—LaCrosse Boiling Water Reactor*, NUREG-0827, June 1983 and Supplement 1, August 1986.

Nuclear Regulatory Commission, 1983h, *PRA Procedures Guide*, NUREG/CR-2300, (prepared under the auspices of the American Nuclear Society and the Institute of Electrical and Electronics Engineers) January, p. 12-21 through 12-23.

Nuclear Regulatory Commission, 1984a, *Integrated Plant Safety Assessment—Systematic Evaluation Program—Big Rock Point Plant*, NUREG-0828, May.

Nuclear Regulatory Commission, 1984b, *Report of the U. S. Nuclear Regulatory Commission Piping Review Committee, Evaluation of Potential for Pipe Breaks*, NUREG/CR-1061, Volume 3, November.

Nuclear Regulatory Commission, 1984c, "Stress Corrosion Cracking in Nonsensitized Stainless Steel", Information Notice 84-89.

Nuclear Regulatory Commission, 1986, *Integrated Plant Safety Assessment—Systematic Evaluation Program—San Onofre Nuclear Generating Station, Unit 1*, NUREG-0829, December.

Nuclear Regulatory Commission, 1987a, "Relaxation in Arbitrary Intermediate Pipe Rupture Requirements," Generic Letter 87-11, June 19.

Nuclear Regulatory Commission, 1987b, "Significant Unexpected Erosion of Feedwater Lines," Information Notice 87-36.

Nuclear Regulatory Commission, 1988a, "NRC Position on IGSCC in BWR Austenitic Stainless Steel Piping," Generic Letter 88-01, January 25.

Nuclear Regulatory Commission, 1988b, "Individual Plant Examination for Severe Accident Vulnerabilities—10 CFR w50.54(f)," Generic Letter 88-20, November 23.

Nuclear Regulatory Commission, 1988c, "NRC Position on IGSCC in BWR Austenitic Stainless Steel Piping," Generic Letter 88-01.

Nuclear Regulatory Commission, 1989, "Resolution of Unresolved Safety Issue A-17—Systems Interactions in Nuclear Power Plants," Generic Letter 89-18, September 6.

Nuclear Regulatory Commission, 1990, *Severe Accident Risks: An Assessment for Five U.S. Nuclear Power Plants (Final Summary Report)*, NUREG-1150, Volumes 1 and 2.

Nuclear Regulatory Commission, 1991a, *Safety Evaluation Report Related to the Full-Term Operating License for San Onofre Nuclear Generating Station, Unit 1*, NUREG-1443, July.

Nuclear Regulatory Commission, 1991b, "High-Energy Piping Failures Caused by Wall Thinning," Information Notice 91-18.

Nuclear Regulatory Commission, 1992, "NRC Position on IGSCC in BWR Austenitic Stainless Steel Piping", Generic Letter 88-01, Supplement 1.

Nuclear Regulatory Commission, 1993, "Thermal Fatigue Cracking of Feedwater Piping to Steam Generators", Information Notice 93-20.

O'Leary, J.F., 1973, AEC Director, Directorate of Licensing, generic letter to applicable BWR and PWR plants regarding clarification of A. Giambusso letter of 12/72, issued January through July 1973.

Oswald, A.J., et al., 1982, "Generic Data and Models", *National Reliability Evaluation Program (NREP)*, EGG-EA-5887, EG&G Idaho, Inc., Idaho Falls, ID..

Perkins, K.E., 1988, (NRC) letter to D.C. Hintz (Wisconsin Public Service Corporation), "Application of Leak-Before-Break Technology as a Basis for Kewaunee Nuclear Power Plant Steam Generator Snubber Reduction," February 16, 1988.

Pickard, Lowe, and Garrick, Inc., 1989, *Database for Probabilistic Safety Assessment of Light Water Nuclear Power Plants*, PLG-0500.

Poloski, J.P., et al., *Rates of Initiating Events at U S. Nuclear Power Plants: 1987-1995*, NUREG/CR-5750, Appendix J, February.

Public Service Company of New Hampshire, 1983, "Seabrook Station Probabilistic Safety Assessment".

Richardson, J.E., 1990, (NRC) letter to E.C. Sterling (CEOG), "Acceptance for Referencing of Topical Report CEN-367, Leak-Before-Break Evaluation of Primary Coolant Loop Piping in Combustion Engineering Designed Nuclear Steam Supply Systems," October 30, 1990.

Shah, V.N., 1998, *Assessment of Pressurized Water Reactor Primary System Leaks*, NUREG/CR-6582, December.

Thomas, H. M., 1981, "Pipe and Vessel Failure Probability," *Reliability Engineering 2*, pp. 83–124.

Mr. J. A. Scalice
Tennessee Valley Authority

BROWNS FERRY NUCLEAR PLANT

cc:
Mr. Karl W. Singer, Senior Vice President
Nuclear Operations
Tennessee Valley Authority
6A Lookout Place
1101 Market Street
Chattanooga, TN 37402-2801

Mr. Jack A. Bailey, Vice President
Engineering & Technical Services
Tennessee Valley Authority
6A Lookout Place
1101 Market Street
Chattanooga, TN 37402-2801

Mr. John T. Herron, Site Vice President
Browns Ferry Nuclear Plant
Tennessee Valley Authority
P.O. Box 2000
Decatur, AL 35609

General Counsel
Tennessee Valley Authority
ET 10H
400 West Summit Hill Drive
Knoxville, TN 37902

Mr. Robert J. Adney, General Manager
Nuclear Assurance
Tennessee Valley Authority
5M Lookout Place
1101 Market Street
Chattanooga, TN 37402-2801

Mr. Ashok S. Bhatnagar, Plant Manager
Browns Ferry Nuclear Plant
Tennessee Valley Authority
P.O. Box 2000
Decatur, AL 35609

Mr. Mark J. Burzynski, Manager
Nuclear Licensing
Tennessee Valley Authority
4X Blue Ridge
1101 Market Street
Chattanooga, TN 37402-2801

Mr. Timothy E. Abney, Manager
Licensing and Industry Affairs
Browns Ferry Nuclear Plant
Tennessee Valley Authority
P.O. Box 2000
Decatur, AL 35609

Senior Resident Inspector
U.S. Nuclear Regulatory Commission
Browns Ferry Nuclear Plant
10833 Shaw Road
Athens, AL 35611

State Health Officer
Alabama Dept. of Public Health
RSA Tower - Administration
Suite 1552
P.O. Box 303017
Montgomery, AL 36130-3017

Chairman
Limestone County Commission
310 West Washington Street
Athens, AL 35611