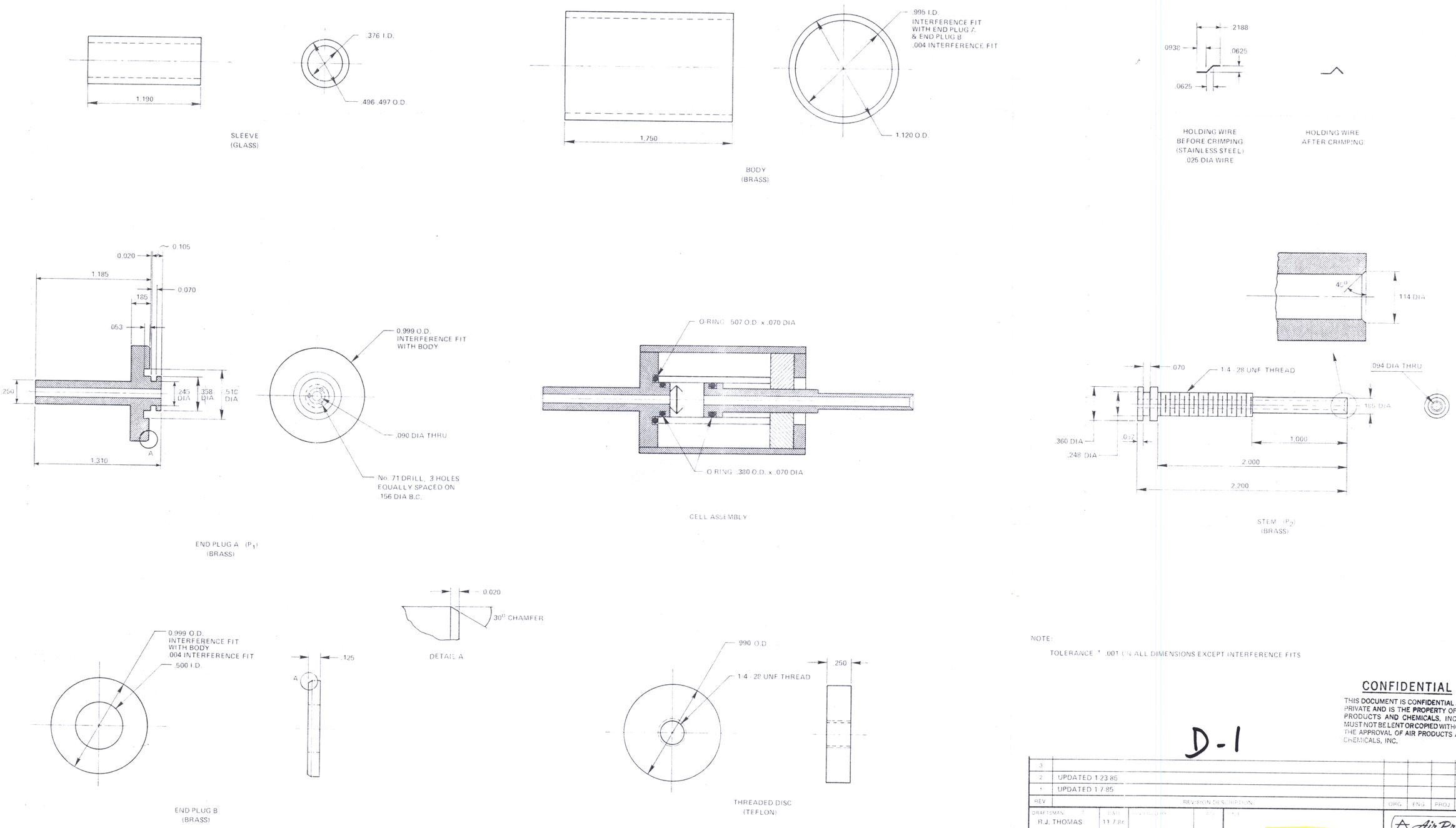


NOTE:

TOLERANCE ± .001 ON ALL DIMENSIONS EXCEPT INTERFERENCE FITS

**CONFIDENTIAL**

THIS DOCUMENT IS CONFIDENTIAL AND PRIVATE AND IS THE PROPERTY OF AIR PRODUCTS AND CHEMICALS, INC. IT MUST NOT BE LENT OR COPIED WITHOUT THE APPROVAL OF AIR PRODUCTS AND CHEMICALS, INC.

D-1

| REV | REVISION DESCRIPTION | ORG | ENG | PROJ | MFG | APPD ICT |
|---|---|---|---|---|---|---|
| 3 | | | | | | |
| 2 | UPDATED 1.23.85 | | | | | |
| 1 | UPDATED 1.7.85 | | | | | |

| | | | |
|---|---|---|---|
| DRAFTSMAN: R.J. THOMAS | DATE: 11.7.84 | REVIEWED BY: | DATE: |
| ENGINEER: C.L. ACKERMAN | | [signature] | 11/4/85 |
| ICT SECTION MANAGER | | | |
| ICT DIRECTOR | | | |

TITLE: ION MOBILITY DETECTOR CELL

ENGINEERING PROJECT NO. | TECHNOLOGY PROJECT NO.

Air Products
INDUSTRIAL CHEMICALS TECHNOLOGY
ALLENTOWN, PENNSYLVANIA

SITE

DRAWING NO. 84 D 0005 D

FORM 9160 (12-80)