UNITED STATES
NUCLEAR REGULATORY COMMISSION
WASHINGTON, D.C. 20555-0001

October 24, 2000

MEMORANDUM TO: Susan F. Shankman, Deputy Director
Licensing and Inspection Directorate
Spent Fuel Project Office
Office of Nuclear Material Safety
and Safeguards

FROM: Christopher P. Jackson, Project Manager
Licensing Section
Spent Fuel Project Office
Office of Nuclear Material Safety
and Safeguards

SUBJECT: SUMMARY OF SEPTEMBER 28, 2000, MEETING WITH HOLTEC INTERNATIONAL ON THE HI-STORM 100 AMENDMENT 1 (TAC NO. L23082)

On September 28, 2000, representatives of the Nuclear Regulatory Commission (NRC) and Holtec International (Holtec) met to discuss the proposed Amendment 1 to the HI-STORM 100 Cask System. Holtec had submitted Amendment 1 to the HI-STORM 100 Cask System on August 31, 2000. An attendance list is included as Attachment 1. Attachment 2 includes the handouts provided by Holtec at the meeting. This meeting was noticed on September 14, 2000.

The meeting commenced with Christopher Jackson, the NRC project manager for this amendment, providing a brief summary of the status of the NRC review. The NRC review identified that Holtec had proposed revisions to an older version of the safety analysis report (SAR), revision 10 of the Topical Safety Analysis Report, rather than the most recent version, revision 0 of the Final Safety Analysis Report. Additionally, the NRC noted that the proprietary nature of the proposed SAR and Certificate of Compliance would prevent the NRC from completing the rulemaking process if the amendment were found to be acceptable. Holtec had committed prior to the meeting to correct both of these issues.

Following the introductory statements by the NRC, Holtec presented the proposed changes and the shielding, criticality, structural, and thermal aspects of the amendment. With this amendment, Holtec is requesting a number of new multi-purpose canister (MPC) basket designs to accommodate higher density fuel loading (32 pressurized water reactor assemblies), damaged fuel, fuel debris, non-fuel hardware, and expanded fuel parameters. Holtec is requesting a new HI-STORM 100 overpack which will be shorter to allow easier access through some existing reactor facility doors, a high-seismic cask design, and revised or streamlined cask pad technical specifications. Holtec is requesting approval to store high burn-up fuel, up to 68,200 MWD/MTU. Additionally, Holtec is requesting approval for convection credit in the thermal analysis and regionalized fuel loading credit in the shielding analysis.

The staff commented that the scope of the requested changes was very large, and some of the technical issues appeared to be very challenging. Additionally, staff noted that some of the supporting information needed by the staff did not appear to be included in the application. The meeting concluded with a discussion of future activities. The staff indicated that in accordance with the rules of engagement, the staff would complete an acceptance review after the staff had an opportunity to review the information Holtec had previously committed to supply. Following the completion of the acceptance review, the staff would make a determination if the application was complete and document any additional information needed to begin the review. During the course of the meeting, the staff made no determination regarding the adequacy of the information presented, and no regulatory decisions were requested or made.

Docket No: 72-1014

Attachments: 1. Attendance List
2. Meeting Handouts

Distribution:

Docket	NRC File Center	PUBLIC	NMSS R/F	SFPO R/F	EWBrach
EEaston	SGagner, OPA	NRC Attendees	CBrown		

G:\HI-STORM\Amendment 1\9-28-00 HOLTEC meeting sum.wpd *See previous concurrence

OFC	SFPO	E	SFPO	E	SFPO			
NAME	CJackson		VLSharpe		SBaggett			
DATE	10/23/00		10/24/00		10/24/00			

C = COVER E = COVER & ENCLOSURE N = NO COPY OFFICIAL RECORD COPY

The staff commented that the scope of the requested changes was very large, and some of the technical issues appeared to be very challenging. Additionally, staff noted that some of the supporting information needed by the staff did not appear to be included in the application. The meeting concluded with a discussion of future activities. The staff indicated that in accordance with the rules of engagement, the staff would complete an acceptance review after the staff had an opportunity to review the information Holtec had previously committed to supply. Following the completion of the acceptance review, the staff would make a determination if the application was complete and document any additional information needed to begin the review. During the course of the meeting, the staff made no determination regarding the adequacy of the information presented, and no regulatory decisions were requested or made.

Docket No: 72-1014

Attachments: 1. Attendance List
2. Meeting Handouts

Attachment 1

September 28, 2000, Meeting between Holtec International and Nuclear Regulatory Commission

ATTENDANCE LIST

Name	Affiliation
Christopher Jackson	NRC/SFPO
Sheena Whaley	NRC/SFPO
Julia Myers	NRC/SFPO
Chris Bajwa	NRC/SFPO
Jack Guttmann	NRC/SFPO
Kirke Lathrop	NRC/SFPO
Bill Brach	NRC/SFPO
Wayne Hodges	NRC/SFPO
K. C. Leu	NRC/SFPO
Christopher M. Regan	NRC/SFPO
Randy Hall	NRC/SFPO
Geoffrey Hornseth	NRC/SFPO
Brian Gutherman	Holtec International
Alan Soler	Holtec International
Indresh Rampall	Holtec International
Kris Singh	Holtec International
Everett Redmond II	Holtec International
Stefan Anton	Holtec International
Roger Johnson	PG&E
Richard Klimczak	PG&E
Rick Plasse	NYPA
Steve Shulin	The Ibex Group

Attachment 2

September 28, 2000, Meeting between Holtec International
and Nuclear Regulatory Commission

MEETING HANDOUTS

HI-STORM 100 LICENSE AMENDMENT REQUEST 1014-1

Brian Gutherman
Holtec International
Licensing Manager

MEETING WITH SFPO
SEPTEMBER 28, 2000

AGENDA

- Opening Remarks
- LAR 1014-1 Format and Content
- Overview of Major Proposed Changes
- Technical Discussion (Proprietary Session)
  - Structural (Dr. Alan Soler)
  - Thermal (Dr. Indresh Rampall)
  - Criticality (Dr. Stefan Anton)
  - Shielding (Dr. Everett Redmond II)

LAR 1014-1 Format and Content

- More Than Minimum Material Provided for Completeness and Ease of Review
- Five Attachments Comprise the LAR:
  1. Change Summary Document
     - Description, Reason, Justification for Changes
  2. Mark-up of CoC Changes
  3. Proposed Final Version of CoC
  4. Drawings
  5. Proposed SAR Changes

LAR 1014-1 Format and Content (cont'd)

- TSAR vs. FSAR
- Changes Noted with "*"
- Changes to SAR <u>not</u> Supporting CoC Changes
- Relationship to HI-STAR CoCs
  - Storage
  - Transport

Overview of Major Changes Proposed

- Required to Meet Customer Needs
  - MPC-32
    - Previously Reviewed by NRC
      - All Formal RAIs Complete
    - Included in HI-STAR Until Just Before SER (8/98)
    - Similar design to BWR MPC-68
    - Removed Peripheral Boral Panels
      - Improves Fabrication Fit-up
      - Insignificant Reactivity Effect
    - Other Generic MPC Fabricability Enhancements

September 28, 2000 HOLTEC INTERNATIONAL

Overview of Major Changes Proposed (cont'd)

- Required to Meet Customer Needs (cont'd)
  - High Burnup Fuel (>45 GWD/MTU)
    - Many Plants Need to Store Fuel with Burnups >45 GWD/MTU
    - Up to 68 GWD (PWR)and 60 GWD (BWR)
      - At 15 yrs Cooling Time for Regionalized Storage
    - Consistent with ISG-11
    - Based Upon Previously Reviewed Methodologies
      - PNL CSFM

September 28, 2000 HOLTEC INTERNATIONAL

Overview of Major Changes Proposed (cont'd)

- Required to Meet Customer Needs (cont'd)
  - Recognition of Internal Convection in MPC
    - Allows Storage of Fuel with Higher Heat Emission Rates with Large Thermal Margins Maintained
    - Confirms Holtec Thermal Models Yield Conservative Results Compared to Third Party Work (PNNL)
  - Regionalized Fuel Storage
    - Addresses Broadening Spent Fuel Management at Plants
      - Dry Storage Equally as Important as Wet Storage
      - Won't Necessarily Load All Old Fuel First

September 28, 2000 HOLTEC INTERNATIONAL

Overview of Major Changes Proposed (cont'd)

- Required to Meet Customer Needs (cont'd)
  - High Seismic Deployment
    - Mechanical Design Features Ensure Code Compliance Up to 1.5G ZPA in 3 Directions
  - Damaged Fuel and Fuel Debris
    - Generically Qualified Damaged Fuel
      - MPC-68, MPC-24E
    - Fuel Debris Stored in MPC-24EF, MPC-68FF
  - Non-Fuel Hardware
    - BPRAs, TPDs, CRAs, APSRs

September 28, 2000 HOLTEC INTERNATIONAL

Overview of Major Changes Proposed (cont'd)

- Required to Meet Customer Needs (cont'd)
  - Dresden DFC, Thoria Rod Canister, Neutron Source
    - Previously Approved for HI-STAR
  - New Fuel Assembly Types and Expanded Fuel Parameters
    - Previously Reviewed Methods
    - Most Already Approved for HI-STAR

September 28, 2000 HOLTEC INTERNATIONAL

Overview of Major Changes Proposed (cont'd)

- CoC Enhancements
  - Removal of Pad/Subgrade Design Criteria
    - Criteria Stay in SAR (Second Set Added)
  - G-Limit Added to CoC
  - Lift Height Restrictions Modified
  - Removal of Training/Dry Run Requirements From CoC
    - Retain in SAR

September 28, 2000 HOLTEC INTERNATIONAL

Overview of Major Changes Proposed (cont'd)

- SAR Changes
  - HI-STORM 100S
    - Allows Overpack Loading Inside Part 50 Structure
    - Allows Movement Through Shorter Doorways Without Plant Modifications
    - Changes Affect Overpack Lid, Exit Vents
  - MPC Drawing Changes
    - Fabricability Enhancements

September 28, 2000 HOLTEC INTERNATIONAL

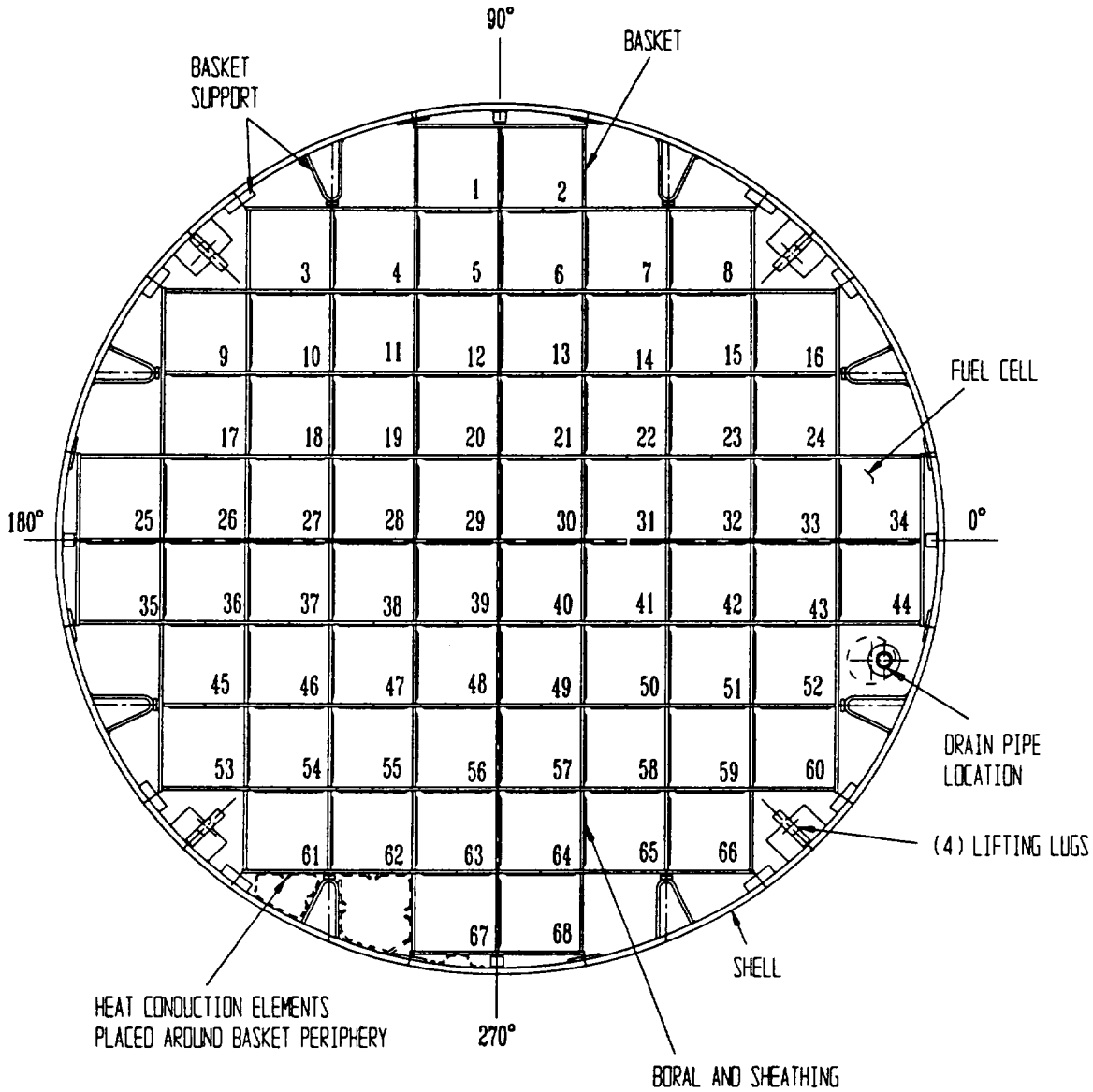

FIGURE 1.2.2; MPC-68 CROSS SECTION VIEW

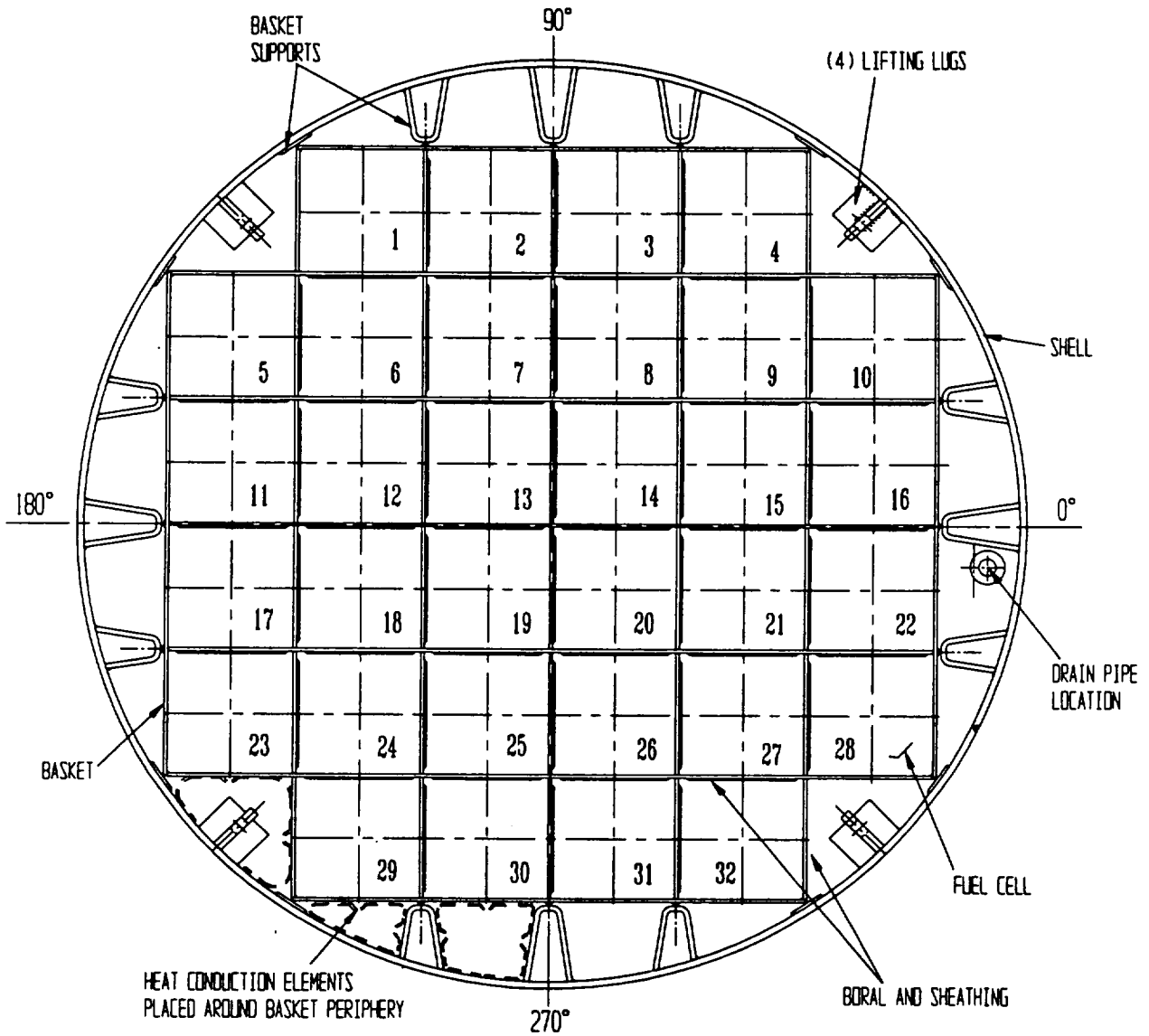

FIGURE 1.2.3; MPC-32 CROSS SECTION

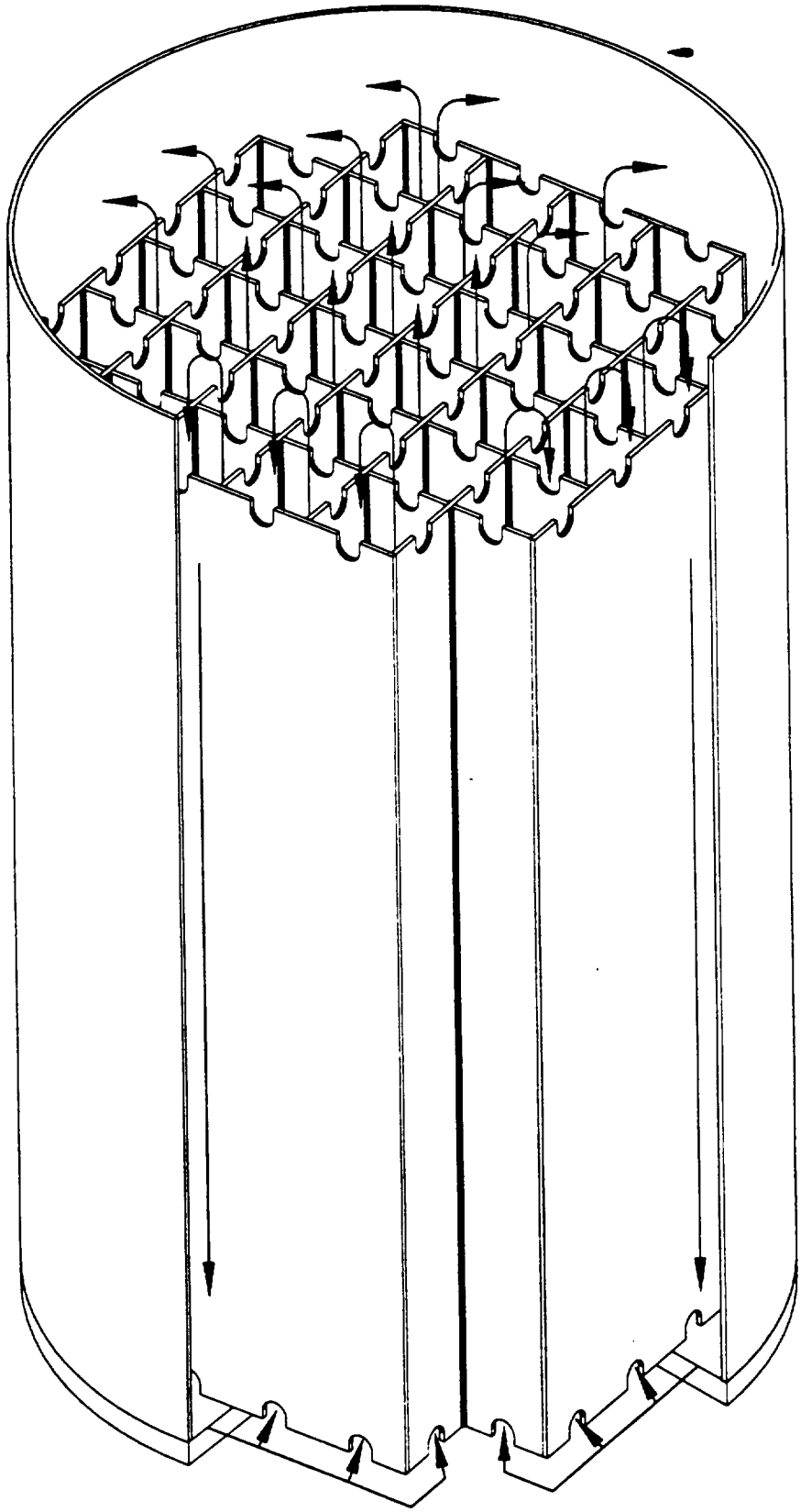

FIGURE 1.6: THERMOSIPHON ACTION IN THE MPC-32 CANISTER

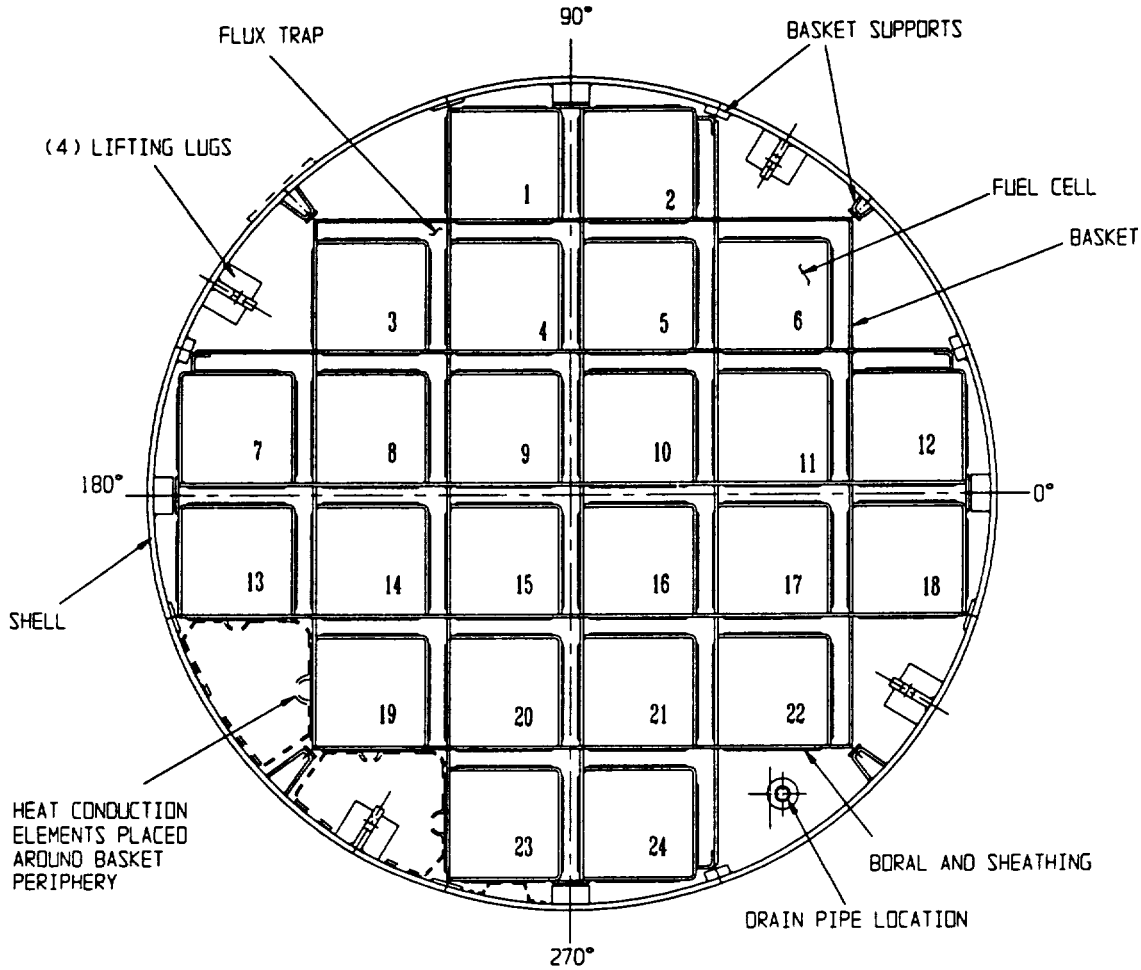

FIGURE 1.2.4; MPC-24 CROSS SECTION VIEW

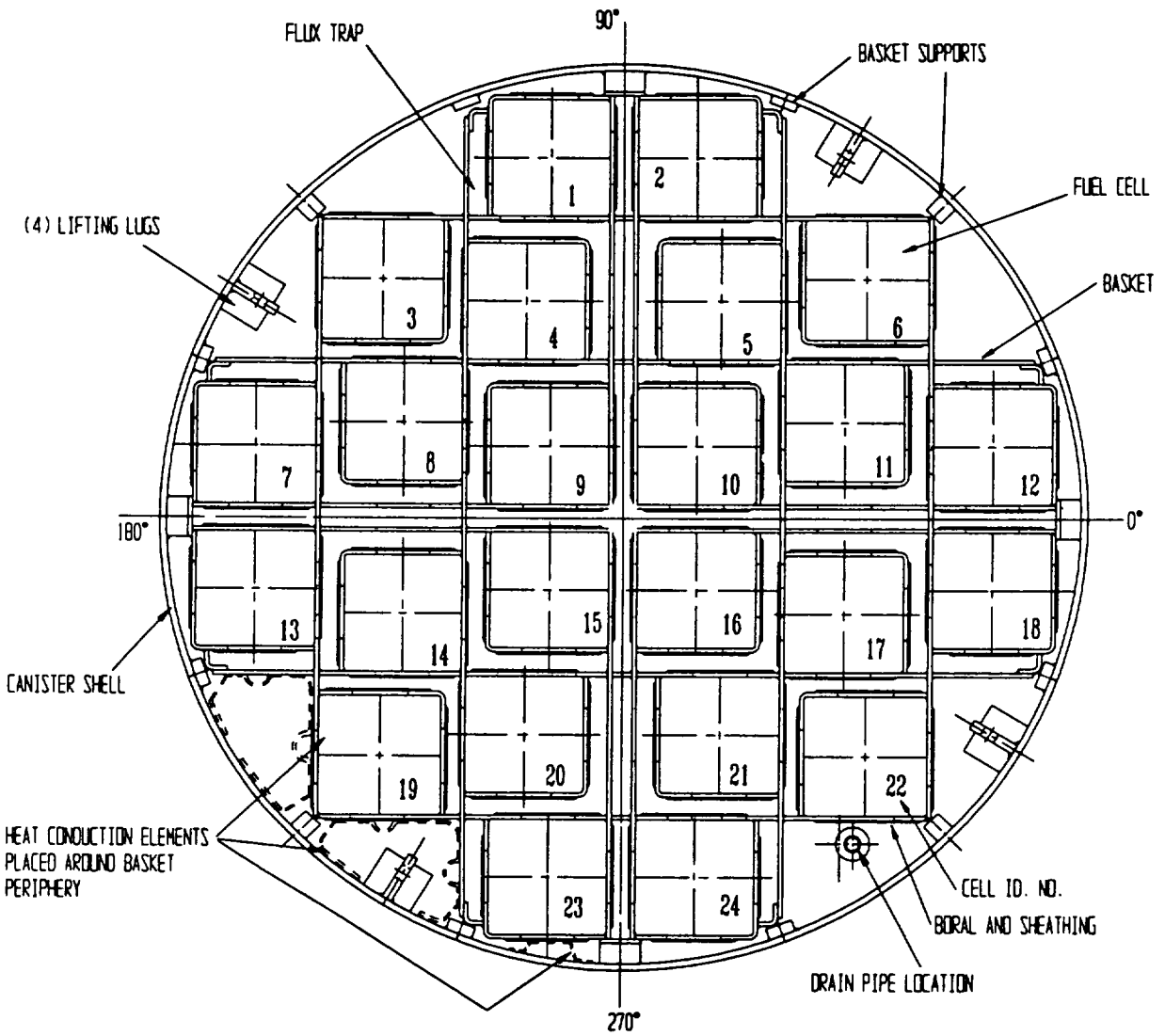

FIGURE 1.2.4A; MPC-24E/24EF CROSS SECTION VIEW

HOLTEC MULTI-PURPOSE CANISTERS

MPC MODEL	CONTENTS
24 and 32	Intact PWR Fuel and Non-Fuel Hardware
24E	Intact or Damaged PWR Fuel and Non-Fuel Hardware
24EF	Intact or Damaged PWR Fuel, PWR Fuel Debris, and Non-Fuel Hardware
68	Intact or Damaged BWR Fuel and Channels
68F	D-1 or HB Intact or Damaged Fuel, Fuel Debris, and Channels
68FF	Intact or Damaged BWR Fuel, BWR Fuel Debris, and Channels

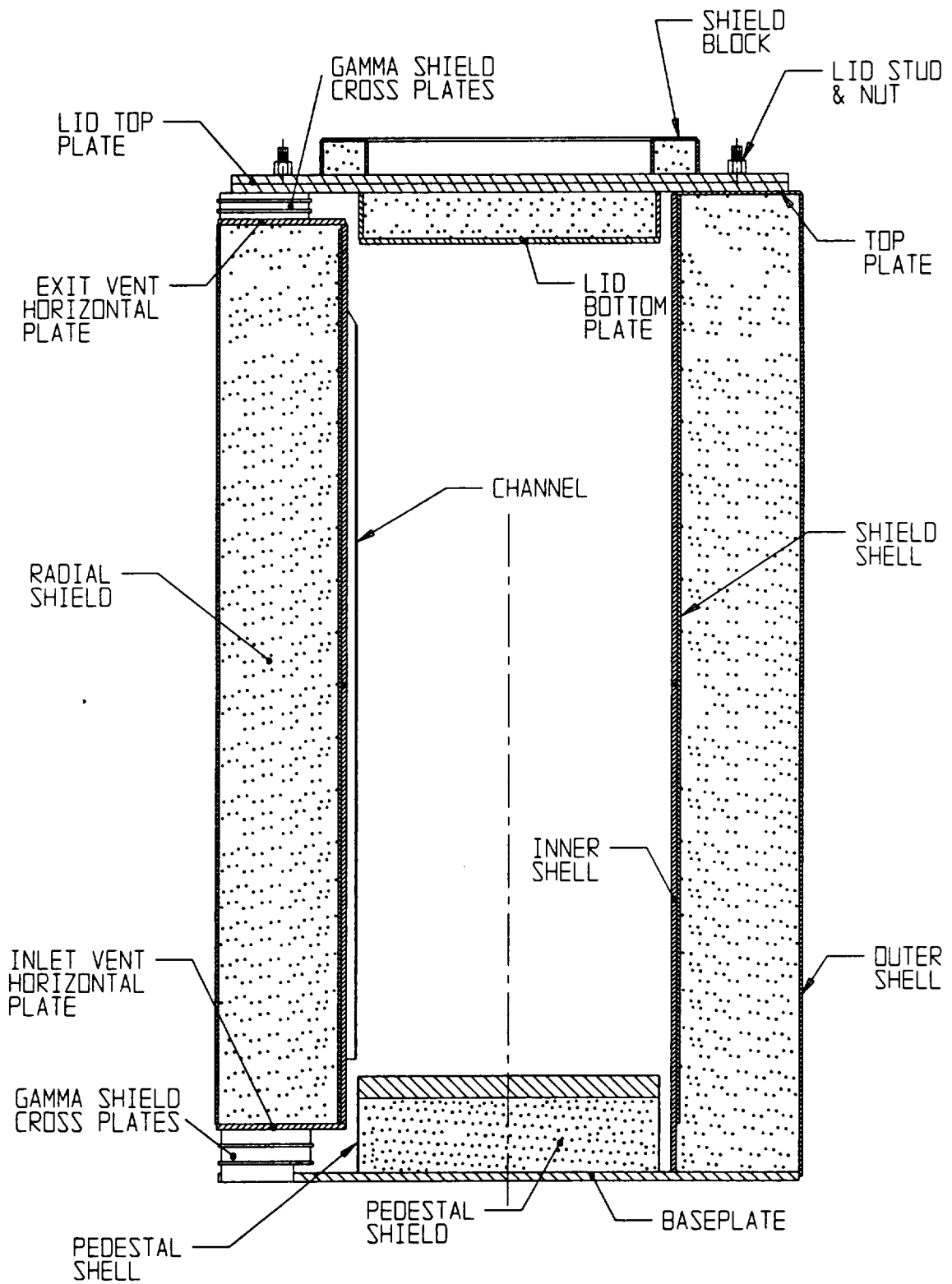

FIGURE 1.2.8; HI-STORM 100 OVERPACK CROSS SECTIONAL ELEVATION VIEW

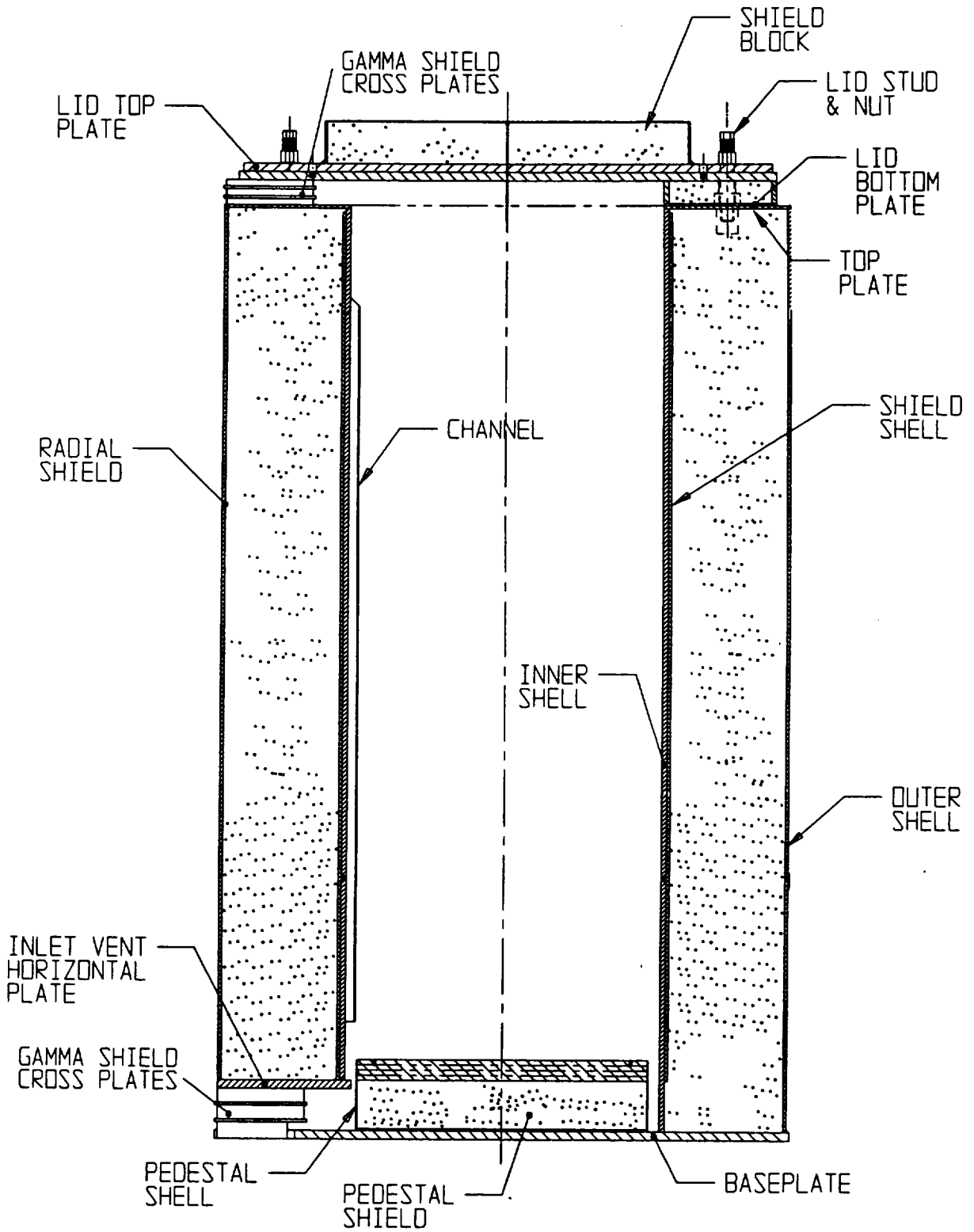

FIGURE 1.2.8A; HI-STORM 100S OVERPACK CROSS SECTIONAL ELEVATION VIEW

OVERVIEW OF MAJOR CHANGES PROPOSED (cont'd)

MATRIX OF MAJOR CHANGES AND AFFECTED TECHNICAL DISCIPLINES*

CHANGE	TECHNCIAL DISCIPLINE AFFECTED				
	STRUCTURAL	THERMAL	CRITICALITY	SHIELDING	CONFINEMENT
MPC-32	X	X	X	X	X
High Burnup Fuel		X		X	X
Convection		X			
Regionalized Fuel Loading		X		X	
High Seismic Deployment	X				
Generic Damaged Fuel and Fuel Debris	X	X	X	X	X
Non-Fuel Hardware		X	X	X	
D-1 DFC, Thoria Canister, Sources	X	X	X	X	X
MPC-24E	X	X	X		
Expanded Fuel Parameters		X	X	X	
Removal of ISFSI Pad and Subgrade Design Criteria	X				
HI-STORM 100S	X	X		X	

* ALL POTENTIALLY AFFECTED DISCIPLINES REVIEW ALL CHANGES PER QA PROGRAM

HI-STORM 100 Shielding Evaluation for LAR 1014-1

Everett Redmond II
Stefan Anton
Holtec International

HOLTEC INTERNATIONAL

E. Redmond II

Additions to Approved Contents

Previously Reviewed and Approved Under
HI-STAR 100 LAR 1008-1

- Dresden Unit 1 Thoria Rod Canister
- Dresden Unit 1 Antimony-Beryllium Neutron Sources
- BPRAs and TPDs
- Increased uranium mass in CoC

HOLTEC INTERNATIONAL

E. Redmond II

Additions to Approved Contents

Not Previously Reviewed

- LaCrosse Stainless Steel Channels (16 per MPC)
- CRAs and APSRs (4 per MPC)
- Generic PWR and BWR Damaged Fuel and Fuel Debris (4 PWR and 16 BWR per MPC)

HOLTEC INTERNATIONAL

E. Redmond II

New Baskets and Overpack

- MPC-24E and MPC-24EF
  (identical to MPC-24 from shielding perspective)
- MPC-68FF
  (identical to MPC-68 from shielding perspective)
- MPC-32
  (analyzed in HI-STORM 100S and 100-ton HI-TRAC)
- HI-STORM 100S
  (analyzed with MPC-32 and MPC-68)

HOLTEC INTERNATIONAL

E. Redmond II

Shielding Similarities Between MPC-24 and MPC-24E

- Variable flux trap size in MPC-24E compared to MPC-24 does not affect shielding
- Identical Boral and stainless steel thicknesses
- Bounding burnups for MPC-24 and MPC-24E used in shielding analysis

HOLTEC INTERNATIONAL

E. Redmond II

HI-STORM 100S

- Maximum dose rates are the same as the HI-STORM 100 overpack
- Eliminates upper duct streaming during MPC transfer operations between HI-TRAC and HI-STORM
- Permits loading overpack inside Part 50 structure for facilities with low door height

HOLTEC INTERNATIONAL

E. Redmond II

HI-STORM Overpack Comparison

	100 (inches)	**100S** (inches)
overall height	239.5	231.25
out the door height	227.25	211.125
MPC above bot. duct	12.0	7.0
MPC below top duct	6.75	1.5

HOLTEC INTERNATIONAL

E. Redmond II

HI-STORM Overpack Comparison (continued)

Contact dose rate location	**100** (mrem/hr)	**100S** (mrem/hr)
bottom duct	14.52	27.33
cask midplane	34.92	34.55
top duct	7.23	21.28
top of overpack	4.31	3.73

HOLTEC INTERNATIONAL

E. Redmond II

High Burnup And Regionalized Fuel Storage

- Regionalized storage permits higher burnup fuel in center of MPC surrounded by lower burnup fuel
- Separate allowable burnup and cooling times specified for region 1 and region 2

	MPC-24	MPC-32	MPC-68
Reg. 1	4	12	32
Reg. 2	20	20	36

HOLTEC INTERNATIONAL

E. Redmond II

High Burnup And Regionalized Fuel Storage (continued)

- Burnups up to 58 GWD/MTU permitted in uniform storage and up to 68 GWD/MTU permitted in region 1
- Bounding burnup and cooling times used for HI-STORM analysis
- Burnup and cooling times from allowable contents used for HI-TRAC analysis

HOLTEC INTERNATIONAL

E. Redmond II

High Burnup And Regionalized Fuel Storage (continued)

- Regionalized storage patterns analyzed with MCNP in 100-ton HI-TRAC
- Dose rates from all regionalized burnup and cooling time combinations calculated and compared with uniform storage dose rates
- Dose rates from uniform storage bound regionalized storage dose rates with few exceptions as noted in LAR

HOLTEC INTERNATIONAL

E. Redmond II

Dose Contribution from Region 1 100-ton HI-TRAC - Midplane

	MPC-24	MPC-32	MPC-68
Number of assemblies	4 (17%)	12 (38%)	32 (47%)
percent of neut. dose	8%	21%	27%
percent of phot. dose	0.2%	1%	2%

HOLTEC INTERNATIONAL

E. Redmond II

MPC-24 HI-TRAC Dose Rates at Cask Midplane

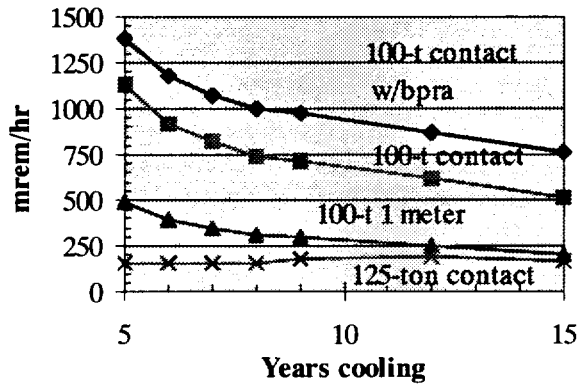

Cooling (years)	Burnup (MWD/MTU)
5	42,500
6	45,000
7	47,500
8	50,000
9	52,500
12	57,500
15	60,000

HOLTEC INTERNATIONAL

E. Redmond II

Conservatism in HI-TRAC Analysis

- Source terms for design basis fuel assembly and BPRA conservatively calculated
- Design basis fuel assembly and BPRA used for all analyses
- Maximum source for BPRA applied for all fuel assembly burnup and cooling times (BPRA source term not varied)

HOLTEC INTERNATIONAL

E. Redmond II

HI-STORM Dose Rates

	Burnup (MWD/MTU)	Cooling (years)	Maximum dose rate (mrem/hr)	Max. dose rate with BPRAs (mrem/hr)
MPC-24	52,500	5	41	46
MPC-32	45,000	5	40	46
MPC-68	47,500	5	38	N/A

HOLTEC INTERNATIONAL

E. Redmond II

Generic Damaged Fuel and Fuel Debris

- Damaged fuel is identical to undamaged fuel from a shielding perspective
- MCNP calculations performed for fuel debris in 100-ton HI-TRAC to verify acceptability
- Less than 20% increase in localized dose rate in the radial bottom of the cask

HOLTEC INTERNATIONAL

E. Redmond II

Conclusion

- All methods used for calculations are identical to previously approved FSAR
- Dose rates in Chapter 5 have changed as a result of high burnup fuel and the addition of non-fuel hardware
- HI-STORM 100 System is in compliance with 10CFR72.104 and 10CFR72.106

HOLTEC INTERNATIONAL

E. Redmond II

Criticality Analyses for HI-STORM License Amendment Request 1014-1

Stefan Anton, Kristopher Cummings,
Debu Mitra-Majumdar, Everett Redmond II,
Stan Turner

September 28, 2000

HOLTEC INTERNATIONAL

Criticality Analyses for LAR 1014-1

- MPC-32
- MPC-24E/EF
- Soluble Boron Credit
- Generic Damaged Fuel and Fuel Debris
- Non-Fuel Hardware
- Other Additions and Changes

HOLTEC INTERNATIONAL

2

MPC-32

- High Density, Non-Fluxtrap Design
- Different from MPC-24, but similar to MPC-68
- Same set of Assembly Classes previously analyzed in the MPC-24
- Same Computer Codes
- Same conservative modeling assumptions used previously
- Credit for Soluble Boron in Pool Water

HOLTEC INTERNATIONAL

3

MPC-32 Cross Section

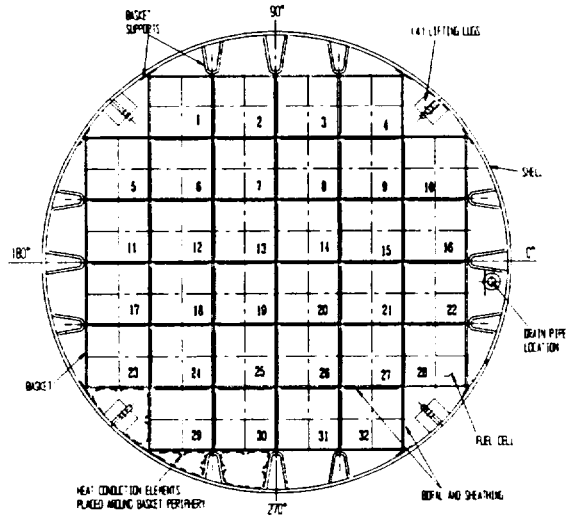

HOLTEC INTERNATIONAL

4

MPC-68 Cross Section

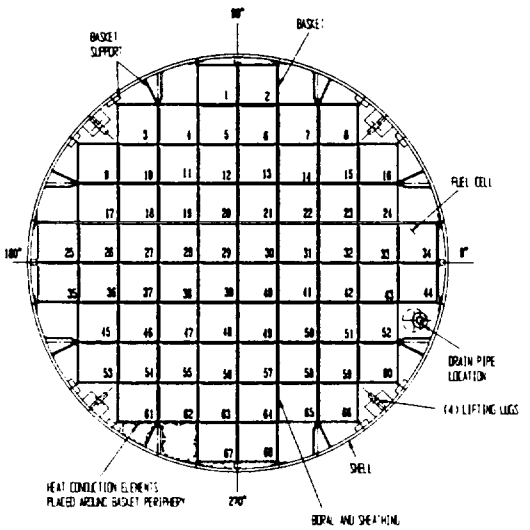

HOLTEC INTERNATIONAL

5

MPC-24 Cross Section

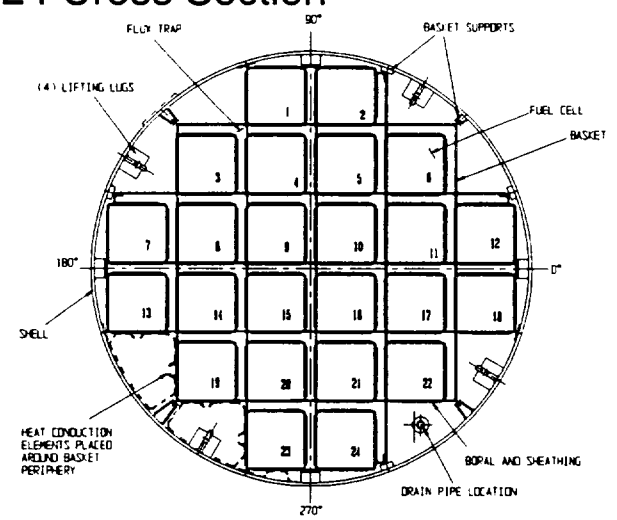

HOLTEC INTERNATIONAL

6

MPC-24E/EF

- Enhanced Version of the MPC-24, allowing higher fuel enrichment
- Increased cell ID in four corner cells to accommodate Damaged Fuel Containers (DFCs)
- Same set of Assembly Classes previously analyzed in the MPC-24
- Same Computer Codes
- Same conservative modeling assumptions used previously

HOLTEC INTERNATIONAL

7

MPC-24E/EF Cross Section

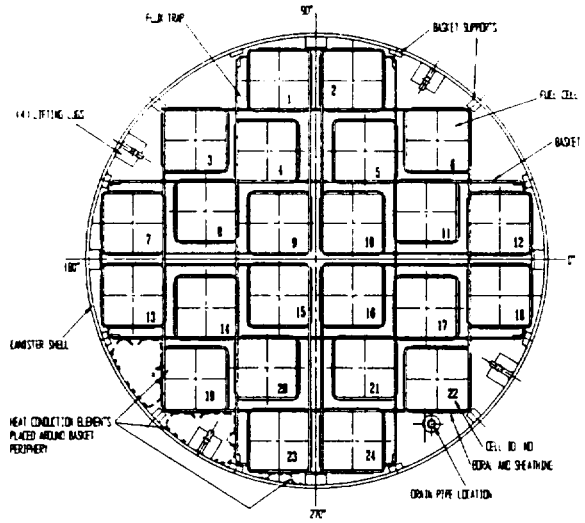

HOLTEC INTERNATIONAL

8

Soluble Boron Credit

- Applied to MPC-32, MPC-24, MPC-24E and MPC-24EF
- Simple Soluble Boron Concentrations / Enrichment Limits for all Assembly Classes:
  - MPC-32, Enrichment ≤ 4.1 wt% ^{235}U : 1900 ppm
  - MPC-32, Enrichment ≤ 5.0 wt% ^{235}U : 2600 ppm
  - MPC-24, Enrichment ≤ 5.0 wt% ^{235}U : 400 ppm
  - MPC-24E/EF, Enrichment ≤ 5.0 wt% ^{235}U : 300 ppm
- Supporting Analyses
  - reduced water density
  - partial flooding horizontal / vertical
  - bounding basket dimensions

HOLTEC INTERNATIONAL

9

Generic Damaged Fuel and Fuel Debris

- Current CoC
  - Dresden 1 and Humboldt Bay Damaged Fuel and Fuel Debris
  - Up to 68 DFCs per Canister
  - Enrichment 3.0 wt% ^{235}U analyzed
  - Supporting Analyses
    - Assemblies with various numbers of missing fuel rods
    - Collapsed assemblies, i.e. assemblies with increased number of rods and reduced rod pitch
    - Homogeneous fuel-water mixture

HOLTEC INTERNATIONAL

10

Generic Damaged Fuel and Fuel Debris (cont.)

- LAR 1014-1
  - Assemblies from all BWR and PWR classes
  - No Soluble Boron Credit for PWR Damaged Fuel / Fuel Debris
  - Limits for BWR
    - MPC-68 and MPC-68FF only
    - up to 16 DFCs per Canister
    - 4.0 wt% ^{235}U for damaged fuel and fuel debris
    - 3.7 wt% ^{235}U for intact fuel
  - Limits for PWR
    - MPC-24E and MPC-24EF only
    - up to 4 DFCs per Canister
    - 4.0 wt% ^{235}U for intact fuel, damaged fuel and fuel debris

HOLTEC INTERNATIONAL

11

Locations of DFCs in the MPC-68/68FF

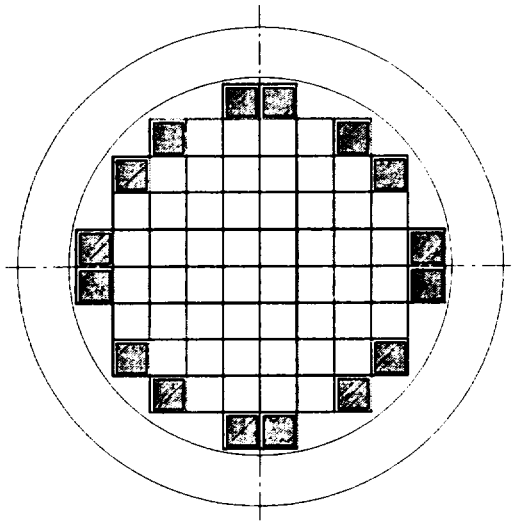

HOLTEC INTERNATIONAL

12

Locations of DFCs in the MPC-24E/EF

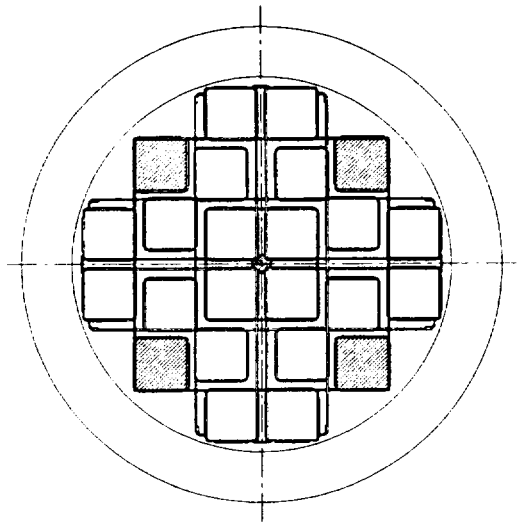

HOLTEC INTERNATIONAL

13

Generic Damaged Fuel and Fuel Debris (cont.)

- LAR 1014-1 (cont.)
  - Supporting Analyses
    - Bounding approach to model damaged fuel and fuel debris, using arrays of bare fuel rods. That is, all structural material inside the DFC including the fuel cladding is neglected
    - Vary the fuel to water ratio in these arrays to identify optimum moderation / highest reactivity
    - Assemblies with various numbers of missing fuel rods
    - Collapsed assemblies, i.e. assemblies with increased number of rods and reduced rod pitch

HOLTEC INTERNATIONAL

14

PWR Non-Fuel Hardware

- Conservatively modeled as empty (voided) Guide Tubes, i.e. no Assumptions regarding Design and/or Material of Non-Fuel Hardware
- With and without Soluble Boron
- Analyzed for MPC-24, MPC-24E/EF and MPC-32
- Reactivity Effect depends on Soluble Boron Level and Assembly type
  - Reduction in reactivity for low or no soluble boron level
  - Slight increase in reactivity for higher soluble boron level in certain assembly types

HOLTEC INTERNATIONAL

15

Other Additions and Changes

- Dresden-1 DFC, Thoria Rod Canister, Neutron Source
  - Already analyzed and approved for HI-STAR
  - No significant Effects on Reactivity
- New or Extended Fuel Assembly Classes
  - Same Methodologies as previous Analyses
  - Some already approved for HI-STAR

HOLTEC INTERNATIONAL

16

Summary of Major Conservative Assumptions

- Fresh Fuel is assumed for all analyses
- Reduction in reactivity due to fuel integral absorbers is conservatively neglected
- The analyses assume only 75% of the minimum Boron-10 content in the Boral
- The pellet to clad gap is assumed to be flooded with pure water, even if the cask is flooded with borated water
- For the PWR Damaged Fuel and Fuel Debris Analyses, the cask is assumed to be flooded with pure water

HOLTEC INTERNATIONAL

17

Summary

- All conditions have been analyzed and qualified
- All methodologies are consistent with the current FSAR
- k_{eff} is below 0.95 for all conditions

HOLTEC INTERNATIONAL

18

THERMAL EVALUATIONS IN SUPPORT OF LICENSE AMENDMENT REQUEST 1014-1 FOR HI-STORM 100 SYSTEM

by

Dr. Indresh Rampall

Dr. Debu Mitra Majumdar

Mr. Evan Rosenbaum

Dr. K.P. Singh

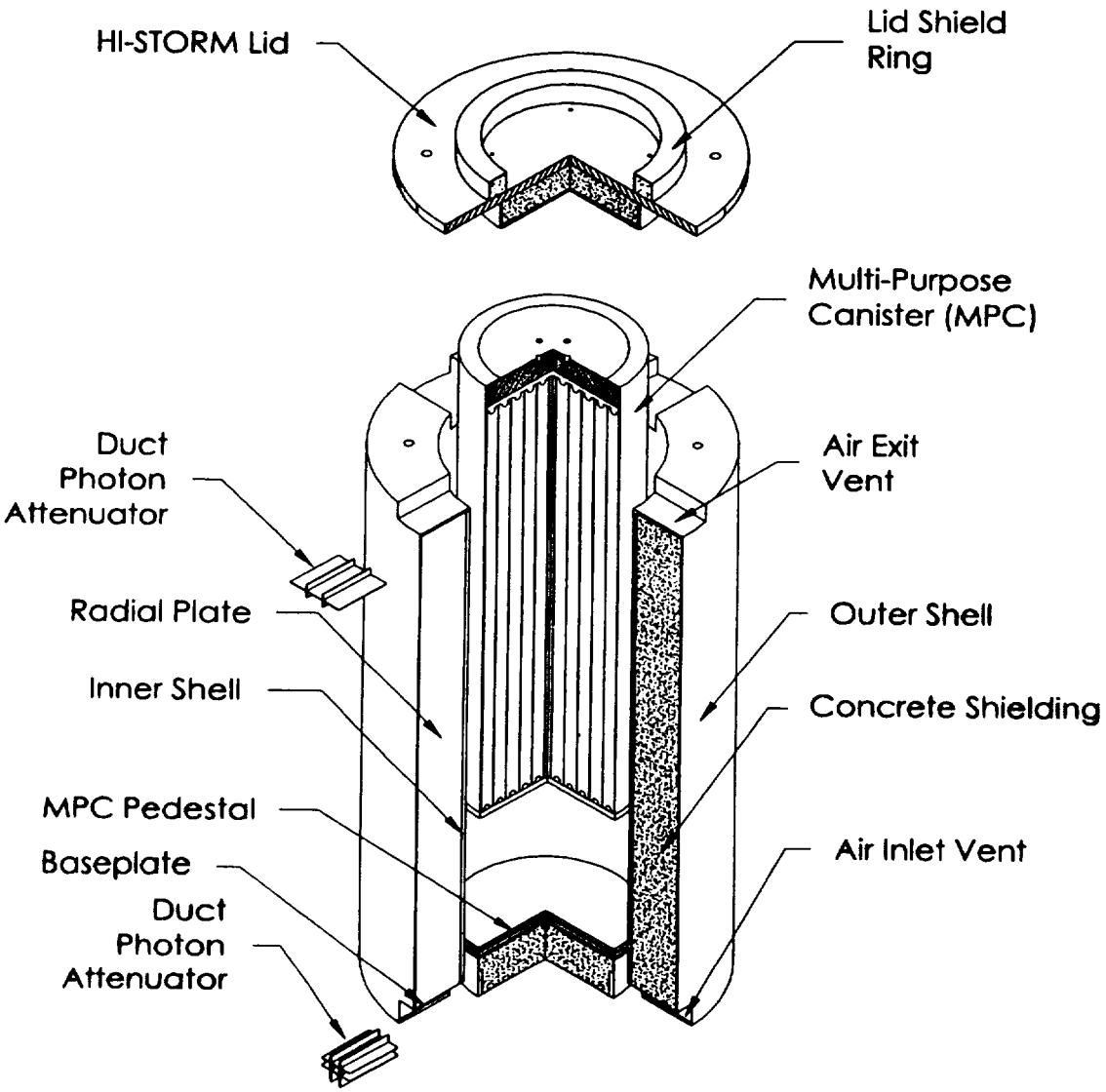

HI-STORM OVERPACK WITH MPC PARTIALLY INSERTED

THERMAL EVALUATIONS IN CHAPTER 4 OF THE FSAR & OTHER MAJOR AREAS

I. Recognition of MPC Internal Convection

II. High Burnup Fuel

III. 32- assembly PWR canister (MPC-32)

IV. Symmetric Version of 24 PWR Canister (MPC-24E)

V. Regionalized Fuel Loading

VI. Shorter Overpack Version (HI-STORM(S))

VII. Plant Specific fuel types

VIII. Non-fuel Hardware

LEGEND:

REGION 1:

REGION 2:

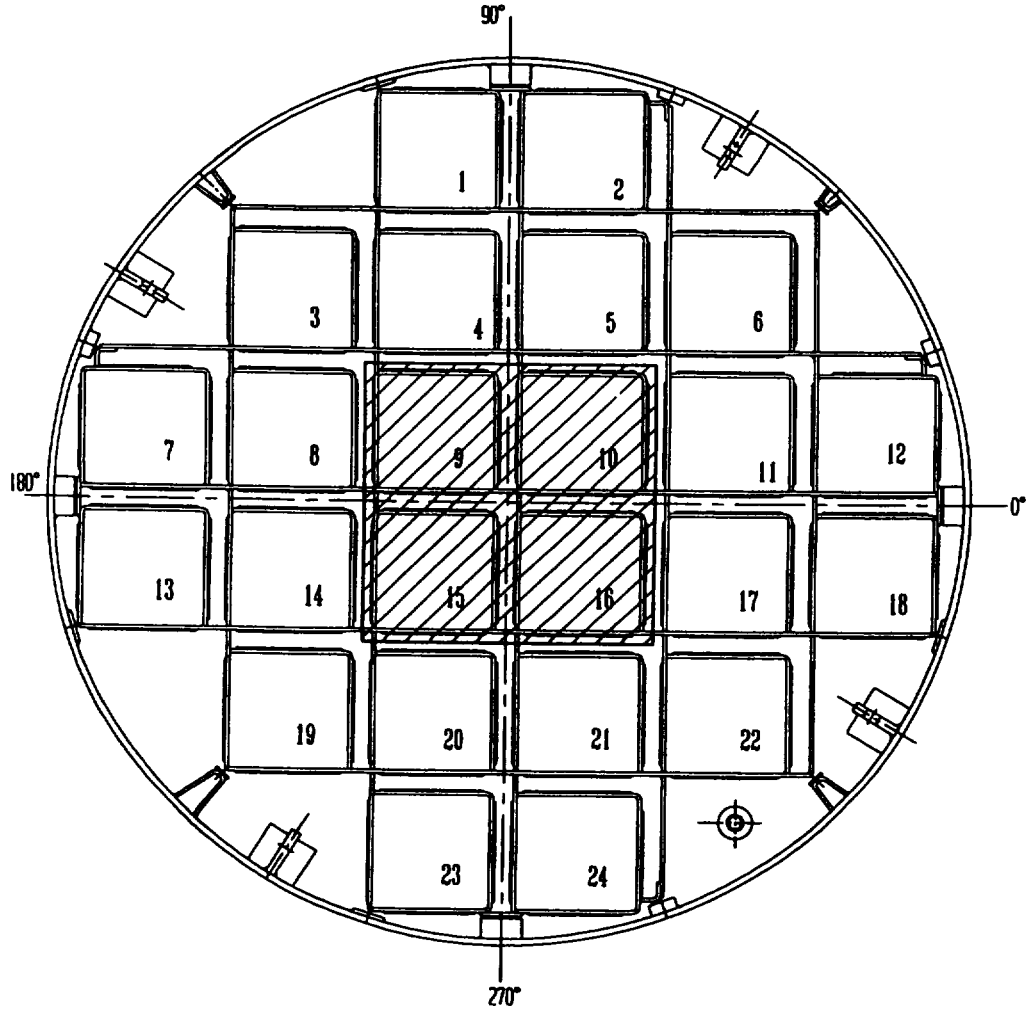

FIGURE 2.1-1
FUEL LOADING REGIONS - MPC-24

LEGEND:

REGION 1:

REGION 2:

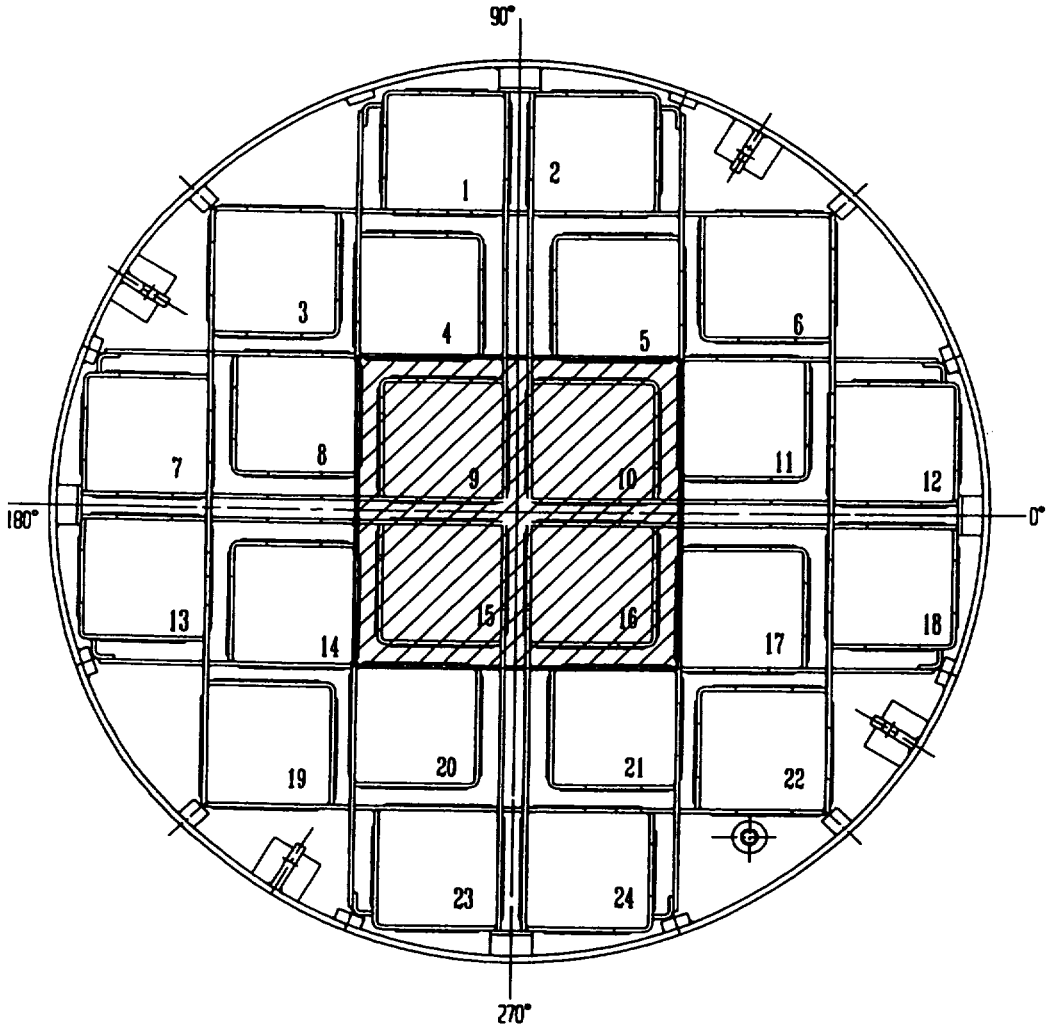

FIGURE 2.1-2

FUEL LOADING REGIONS - MPC-24E/24EF

LEGEND:

REGION 1:

REGION 2:

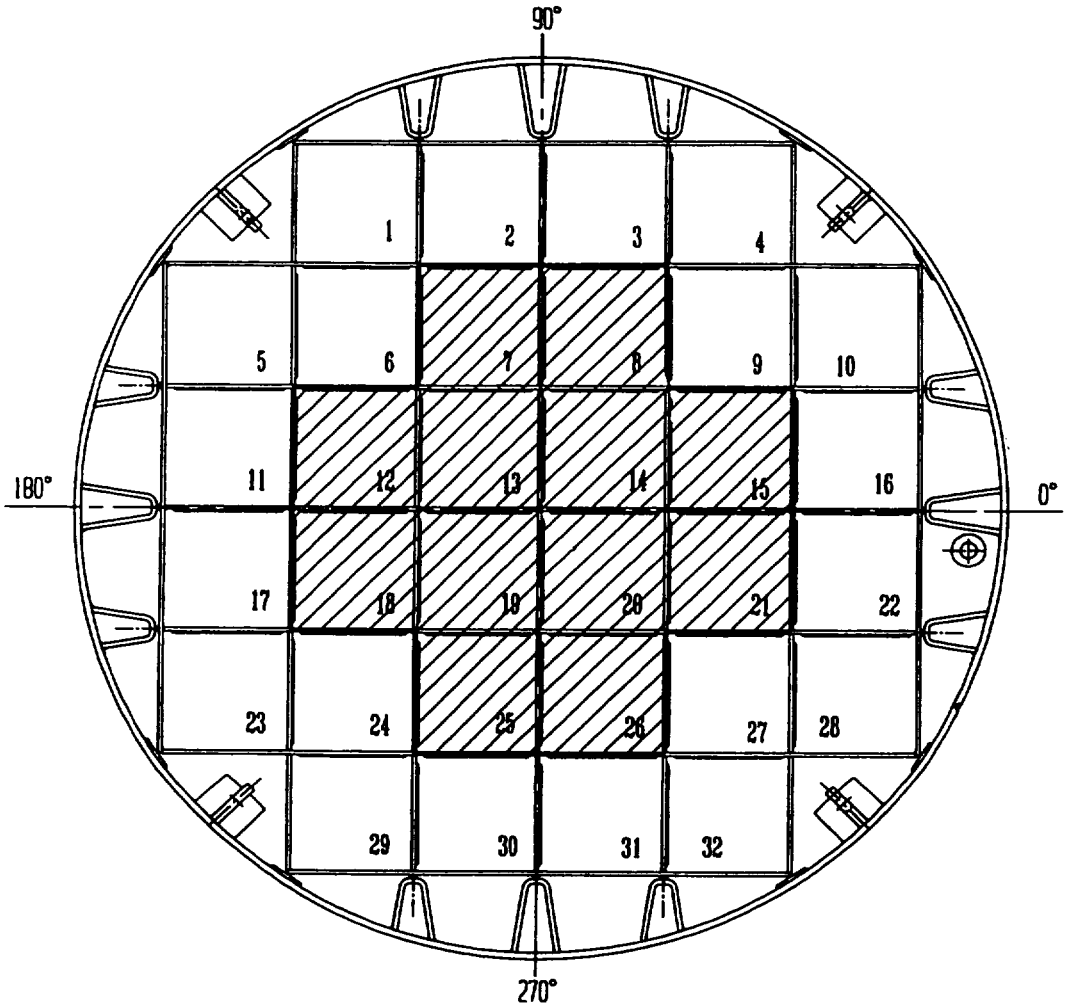

FIGURE 2.1-3

FUEL LOADING REGIONS - MPC-32

LEGEND:

REGION 1:

REGION 2:

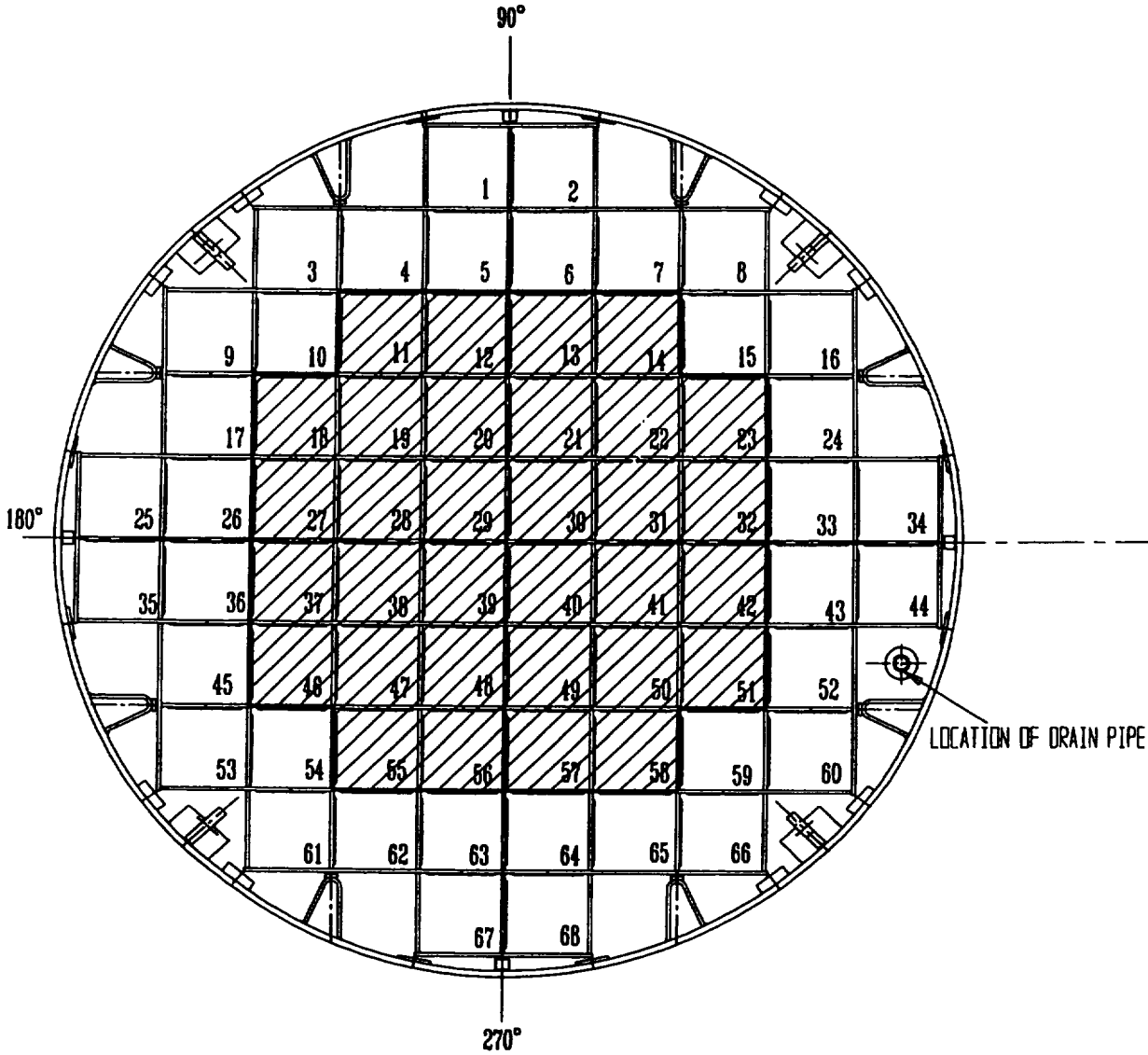

FIGURE 2.1-4

FUEL LOADING REGIONS - MPC-68/68FF

THE MODELING METHODOLOGY UNCHANGED FROM THE APPROVED FSAR

- Thermal Modeling Methodology
  - Homogenized fuel Model
  - Axisymmetric Basket with Effective Thermal Properties
  - Porous Media Model for Fuel Hydraulics
  - Equivalent Downcomer Hydraulic Gap

MODIFICATION IN THE ASSUMPTIONS USED IN THE ANALYSIS

- Internal Thermosiphon Effect Recognized; previously suppressed
- Heat Dissipation by Aluminum Heat Conduction Elements neglected in the internal convection models; previously recognized
- Rayleigh Effect Credit in MPC Peripheral Spaces Eliminated; previously recognized

To be acceptable for licensing basis analysis, the methodology must be appropriately benchmarked

DOCUMENTATION OF HI-STAR/HI-STORM THERMAL METHODOLOGY BENCHMARKING WORK

Reports Submitted to the NRC

- ."Benchmarking the HI-STAR/HI-STORM Thermal Model with TN-24P Test Data", Holtec Report HI-971619 (April 1997).
- "A Revised Thermal Model with Parametric Study of Key Variables", Holtec Report HI-971722, (June 1997).
- "Benchmarking of the Revised Thermal Model with TN-24P Test Data", Holtec Report HI-971741, (August 1997).
- "Topical Report on the HI-STAR/HI-STORM Thermal Model and its Benchmarking with Full-Size Cask Test Data", Holtec Report HI-992252, (Rev. 0, September 1999)

"Topical Report on the HI-STAR/HI-STORM Thermal Model and its Benchmarking with Full-Size Cask Test Data", Holtec Report HI-992252, (Rev. 1, September 2000)

BENCHMARKING WITH PRIOR EXPERIMENTAL WORK

- Validation with EPRI's Test Program
  - Multi-Organization Prototypical Cask Testing (TN-24P Test)
  - EPRI (Sponsoring Organization)
  - Virginia Power (Irradiated Fuel Supplier)
  - INEEL (Testing Authority)
  - PNNL (Consulting/Analysis)

CORROBORATION OF THERMAL MODELS BY PNNL

- PNNL Performed an Independent Evaluation of HI-STORM 100 for PFS ASLB Hearing
  - COBRA-SFS Code Used
  - Significant Heat Load (21.5 kW, MPC-24)
  - Pressurized Helium Canister (5 atm)
  - Different Ambient Temperatures

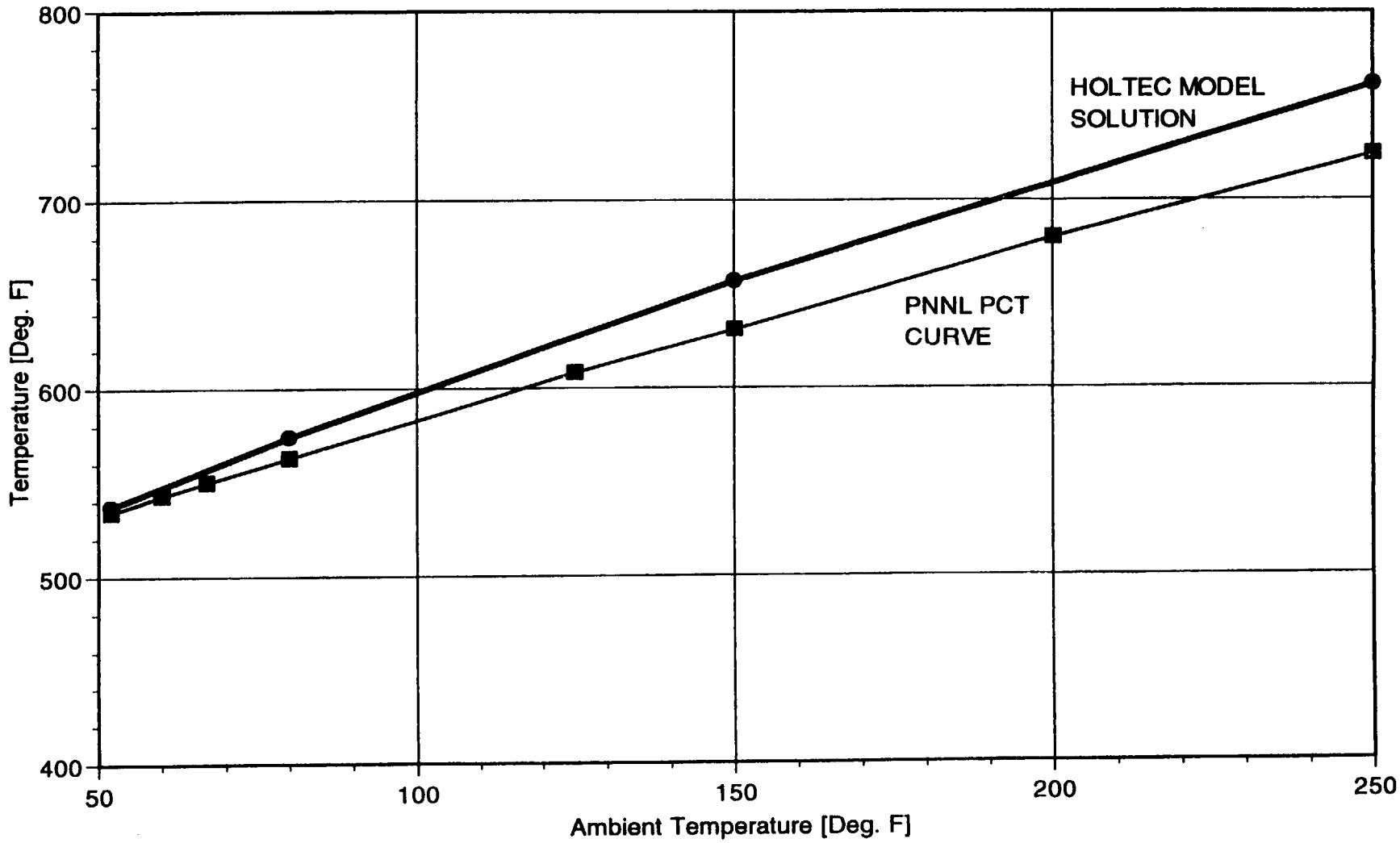

FIGURE 4.7: COMPARISON OF FLUENT PEAK CLAD TEMPERATURE SOLUTION WITH PNNL RESULT

CONCLUSION

Comparison with EPRI test data and PNNL's independent analyses prove that the thermal model utilized in LAR 1014-1 is consistently conservative

HIGH BURNUP FUEL PCT LIMIT EVALUATION METHODOLOGY

- Complies with Regulatory Guidance (ISG-11, Rev. 1)
- Utilizes existing creep data for low & medium burnup fuel in a conservative manner.
- Employs widely accepted failure model for creep rupture of pressurized cladding to establish permissible temperature limits.
- Builds upon previously established approaches to cladding PCT limits determination.
  - Consistent with PNNL approach utilized in the approved FSAR for low burnup SNF (creep accumulation)
  - Peak cladding temperature changes in proportion to the change in the heat generation rate
  - PCT is determined as function of fuel age at the beginning of dry storage

HOLTEC HIGH BURNUP MODEL

- Key Assumptions:
  - Employ a strain rate function with a robust safety margin over the duration of dry storage (40 years)
  - Use a small end-of-storage strain (1%) to minimize the possibility of cladding failure
  - To compute a lower bound PCT limit, maximize cladding stress using bounding rod parameters: Pressure, radius-to-thickness ratio and cladding corrosion

In other words, use the most limiting stress, most limiting strain and most limiting creep rate function

The Fundamental Degradation Mode for Fuel Cladding is Increasing Hoop Strain with Time (Creep)

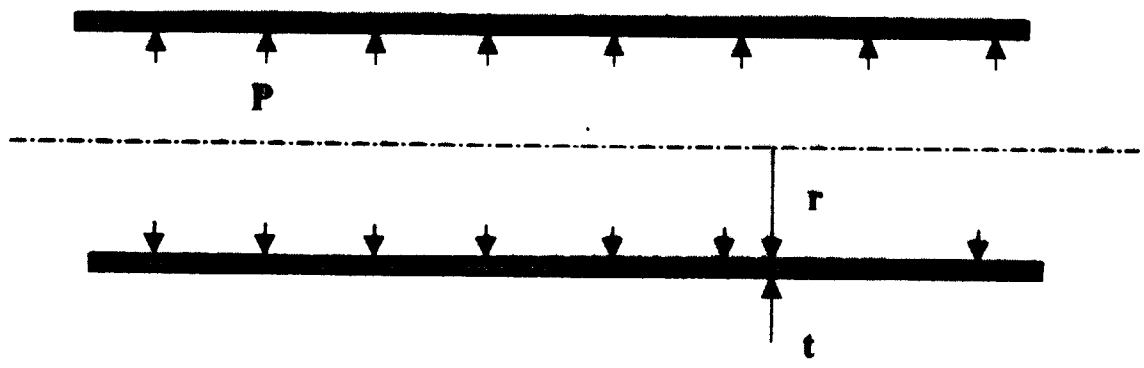

Hoop Stress (σ) = P r/t

Rate of Creep = f (σ,T)

Zircaloy Stress Strain Curve

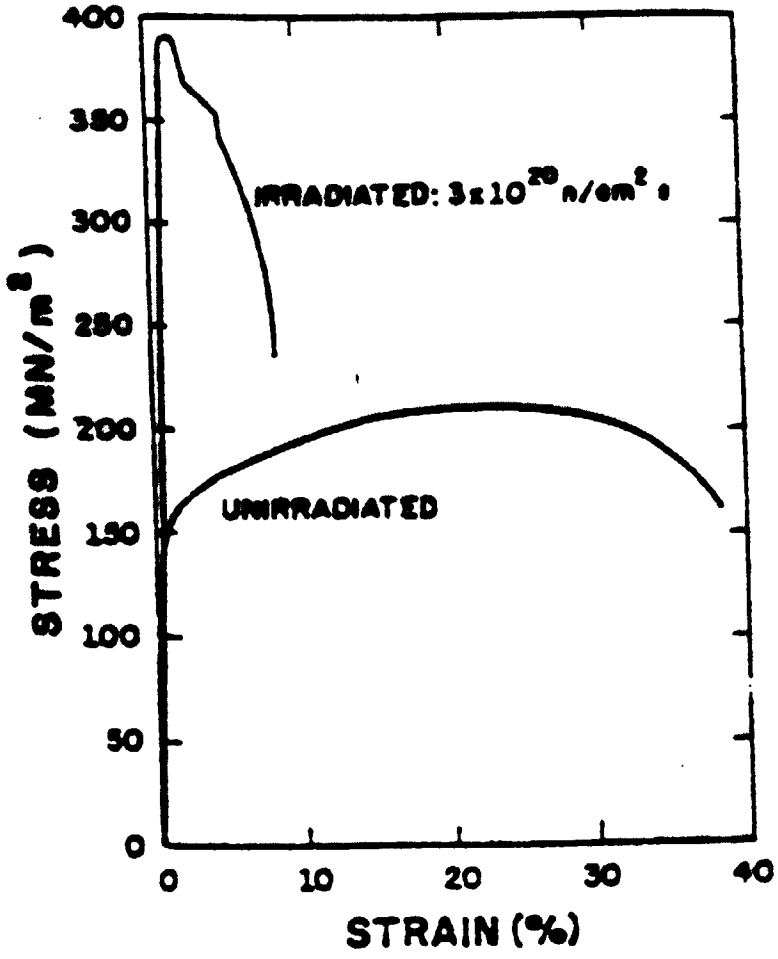

Table 4.4.28

MPC-32 DESIGN BASIS MAXIMUM HEAT LOAD† VERSUS FUEL AGE AT LOADING (MODERATE BURNUP)

Fuel Age at Loading (years)	***Permissible Heat Load (kW)***
5	*28.74*
6	*27.95*
7	*25.79*
10	*25.26*
15	*24.68*

HI-STORM AMENDMENT REQUEST SUMMARY

1. A conservatively articulated High Burnup Model proposed to address fuel storage in excess of 45,000 MWD/MTU burnup
2. Explicit thermal evaluations for MPC-32, MPC-24E and all "type F" canisters
3. Permissible heat loads for uniform storage of low & high burnup fuel for all canister types
4. Permissible heat loads for regionalized storage of low & high burnup fuel
5. Thermal effect of non-fuel hardware evaluated
6. Thermal evaluation of HI-STORM 100(S) documented